https://truckmanualshub.com/

TECHNICAL SPECIFICATION

HD5395TS

BASICS

Model name	**HD 5395 TS** (Heavy Duty 95tonnes Tridem Steered)
Axle driveline configuration	**10x6** (72,6% driven weight at loaded condition)
Nominal G.V.W. @ 40km/h	**95.000 / 95 tonnes**
Nominal target payload @ 40 km/h	**70.000kg / 70 tonnes**
Category	**"HEAVY DUTY DUMPERS"**
Speed	**Loaded: Limited at 40 km/h**** **Unloaded: Limited at 60 km/h***

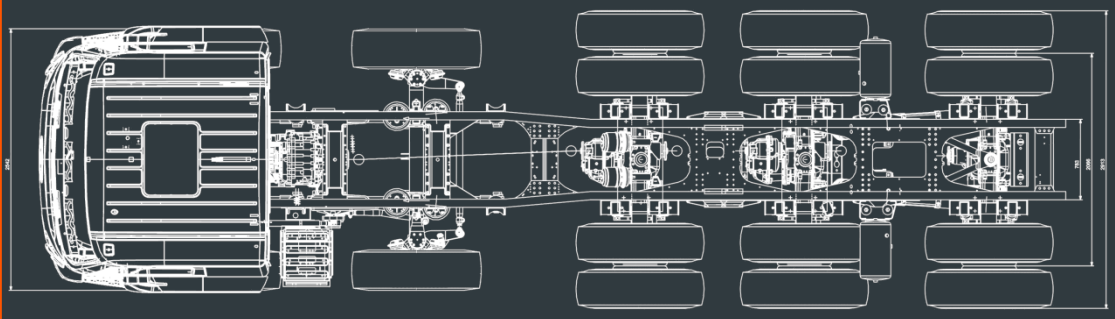

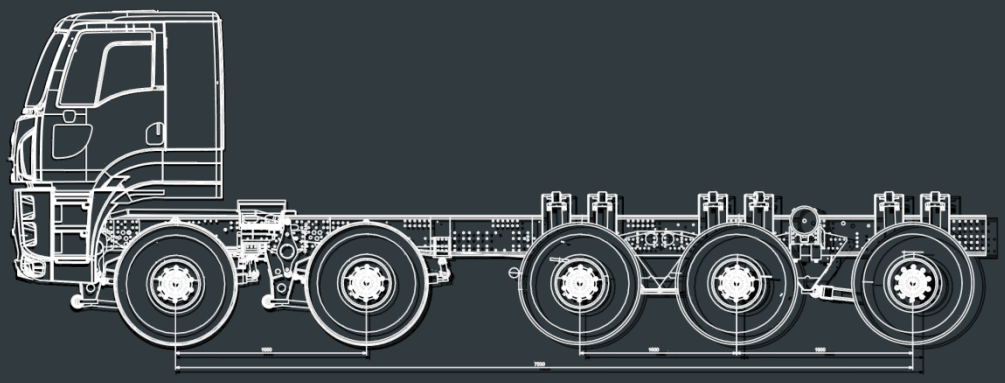

HV	**1310.5mm**	HA	**1307.5mm**	**Loaded**

Front axle loads @ 40km/h			Rear axle loads @ 40km/h	
Axle #1	Axle #2	Axle #3	Axle #4	Axle #5
13.000kg / 13 tonnes	**13.000kg / 13 tonnes**	**23.000kg / 23 tonnes**	**23.000kg / 23 tonnes**	**23.000kg / 23 tonnes**

**at the mentioned axle reduction*
***or other to be specified*

https://truckmanualshub.com/

ENGINE

Model name	**Cummins QSX15 610 bhp TIER 3 HPI**
Type	**Diesel engine, four stroke, turbocharged, intercooled, emission complies with TIER 3**
Maximum performance	**449 kW (610hp)/1900 rpm (600hp/2100rpm)**
Maximum torque	**2542 Nm/1400 rpm**
Cylinder configuration	**6 in line**
Bore x stroke	**137 x169 mm**
Displacement	**14.9L**
Fuel system	**Direct injection**
Governor	**Electronically controlled**
Lubrication system	**forced lubrication, oil filter with exchangeable element**
Air filter	**dry type with precleaner (cyclon type), plus dust indicator**
Cooling system	**fluid type with forced circulation**
Compressor	**working pressure 10 bar**
Engine PTO	**Cummins REPTO**

CLUTCH

Type	**Single dry plate**
Diameter	**430mm**
Operation	**Electronic pneumatic, self adjusting**

GEARBOX

Model	**12AS3141TO**
Type	**AS-Tronic, automated shift, manual override**
Software	**GINAF HD Mining Shift Program**
No. of gears	**2 x 6**
Ratio	**12,29-0,78 : 1**

GEAR RATIO'S

#1	#2	#3	#4	#5	#6	#7
12.29	**9.59**	**7.41**	**5.78**	**4.56**	**3.56**	**2.69**
#8	#9	#10	#11	#12	#R1	#R2
2.10	**1.62**	**1.27**	**1.00**	**0.78**	**11.38**	**8.88**

FRONT AXLES

Axle 1 & 2	**NOG 13270 & 13271**
Type	**non-driven steered axle**
Nominal technical capacity	**2 x 13.000 kg / 2 x 13 tonnes**

https://truckmanualshub.com/

REAR AXLES

Axle 3	**APS 20290**
Type	**Rigid drive axle, pinion and crown wheel with spiral bevel primary reduction, hub reduction, mechanical interwheel and interaxle differential locks**
Ratio	***8,79***
Nominal technical capacity @40km/h	**23.000 kg / 23 tonnes**

Axle 4	**APS 20291**
Type	**Rigid drive axle, pinion and crown wheel with spiral bevel primary reduction, hub reduction, mechanical interwheel and interaxle differential locks**
Ratio	***8,79***
Nominal technical capacity @40km/h	**23.000 kg / 23 tonnes**

Axle 5	**APS 20292**
Type	**Rigid drive axle, pinion and crown wheel with spiral bevel primary reduction, hub reduction, mechanical interwheel differential lock**
Ratio	***8,79***
Nominal technical capacity @40km/h	**23.000 kg / 23 tonnes**

AXLE RATIO'S

Axle ratio	8.79
Max. geared speed @2100 rpm	**68.77 km/h**

CHASSIS

Chassis frame	**bolted, prepared for attachment tipper**
Frame members	**Front and rear U members with crossbeams**
Reinforcement	**15mm flitches on top and underneath the main frame members**
Front bumper	**steel, with towing point**
Rear cross beam	**fitted with tow hook**
Fuel tank	**1 x 400L behind cab aluminum (Wiggins quick fill)**
Lubrication system	**Central grease system**
Exhaust	**exhaust discharge right side upwards**

***or other to be specified due mine application*

https://truckmanualshub.com/

SUSPENSION

Axle 1 & 2	**parabolic leaf springs combined with air bellows, inter-axle compensation, stabiliser axle 1.**
Axle 3, 4 & 5	**Heavy Duty - Hydro Pneumatic Vehicle Suspension (HD-HPVS), suspension and compensation using hydraulic cylinders and nitrogen accumulators,** - **automatic level control,** - **roll stabilisation during driving** - **lateral levelling control** - **tipper stabiliser**

STEERING

Type	**dual circuit ball and nut steering, hydraulically pressurized, , service / emergency pump, servo cylinders. Mechanic steered axle 1 & 2**
Evs	**Electronic Vehicle Steering, rigid rear axle steering (axle #5), speed dependant**

WHEELS AND TYRES

Axle 1, 2	**395/85R20 Michelin XZL Tubeless (single mounted)** Width over the tires: 2.741 mm
Axle 3, 4 & 5	**395/85R20 Michelin XZL Tubeless (dual mounted)** Width over the tires: 2.913mm

BRAKES

Service brake	**Dual circuit full air brake system. Drum brakes front and rear, EBS (Electronic brake system). Twin cylinder air compressor with heated air dryer. Automatic slack adjusters.** **Hill Start Aid function.**
Parking brake	**Spring applied on axle 3,4 and 5, pneumatically released**
Emergency brake	**parking brake and intact circuit of service brake are used**
Auxiliary brake	**+ Engine brake, maximum performance 360 kW / 2300 rpm** **+ ZF-Intarder, maximum performance 600 kW**

https://truckmanualshub.com/

ELECTRICAL SYSTEMS

Voltage	**24V**
AC alternator	**80A, 2.24 kW**
Batteries	**2 x 12V, 180 Ah**
Lights	**height-adjustable headlights, rear light cluster including fog lamp (left) and reversing lamp with warning signal.**
Speed limiter loaded	**40 km/h**

CAB

Exterior	**Mechanically suspended Cab. Main mirrors and wide angle mirrors electrically heated. Electric door lock co-driver, 2 keys**
Cab interior	**Adjustable steering column, luxury air suspended drivers seat, three point type of safety belts, centre console with air outlets, cigarette lighter (12V), ashtray, central storage compartments, air-conditioning**
Instrument panel	**Fuel gauge, water temperature gauge, air pressure gauges, rev. counter, illuminated actuators and control lights for (among others) dipped headlights and main beam, direction indicators, rear fog light, parking brake, central LCD display for other indicators.**

PAYLOAD DESIGN RULE

Nominal target payload: **70t** @ 40 km/h

Developed to meet the international 10/10/20 mining standard @ max 18% slope

"No more than 10% of payloads may exceed 110% of the truck's target payload and no single payload shall ever exceed 120% of the target payload"

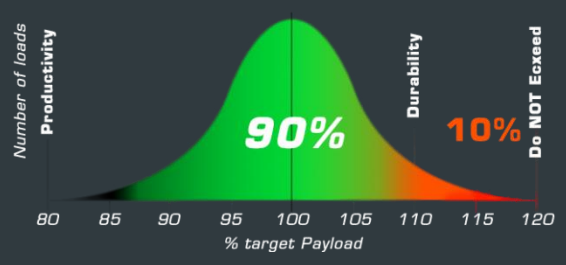

Maximum performance & safety in its class	**56t**	**63t**	**70t**	**77t**	**84t**

https://truckmanualshub.com/

STANDARD SAFETY FEATURES

#1	Emergency Button Inside Cabin (engine cut off and apply parking brake)	Standard
#2	Tipping safety: - Tipping only possible after lateral levelling vehicle - HPVS functionalities are cut of during tipping - Vehicle speed <3 km/h during tipping	Standard
#3	FOPS – Falling Objects Protection System by Canopy	Standard
#4	Retarder automatically switched to brake pedal	Standard
#5	Main switch on battery pack to cut off power supply	Standard
#6	Load indication inside cabin	Standard
#7	Vehicle speed <3 km/h when vehicle exceeds 20% target payload overload.	Standard
#8	Data logging of speeds, loads, shifts	Standard
#9	Fire extinguisher, powder	Standard
#10	Speed limiter when loaded @ 40 km/h (other desired speed to be discussed)	Standard

OPTIONAL (SAFETY) FEATURES

#1	AM/FM Radio with MP3 capability and USB inlet	Optional
#2	Xenon Lights	Optional
#3	Side lights on the platform, (with manual adjustment and activation when in reverse). Side illumination for dumping area edge operation, parking and loading.	Optional
#4	Camera views right side (dead view) and rear view	Optional
#5	Emergency Button Right Front Bumper (engine cut off and apply parking brake)	Optional
#6	Proximity sensors to warn the driver (locations to be discussed)	Optional
#7	Auxiliary illumination for engine compartment maintenance with switch	Optional
#8	Real-time tire pressure monitoring	Optional
#9	Safety rotation beacon light, with LED lamps, magnetic base (25W/12V), weather resistant, location cabin rooftop.	Optional
#10	Tipping procedure; lateral levelling before tipping (by control of engine pto)	Optional
#11	Additional front lights for night operations (4x, location to be discussed)	Optional
#12	Load display outside cabin to mention payload	Optional
#13	Load indication alarm (lights) to indicate loader outside cabin	Optional

https://truckmanualshub.com/

Performance

The retarding performance for the continuous operation is limited by the friction coefficient[1]. To determine the retarding speed in the second graph first set the limitations for the friction coefficient in the first graph. Use the traction limitation in the second graph by moving the orange dotted line downwards.

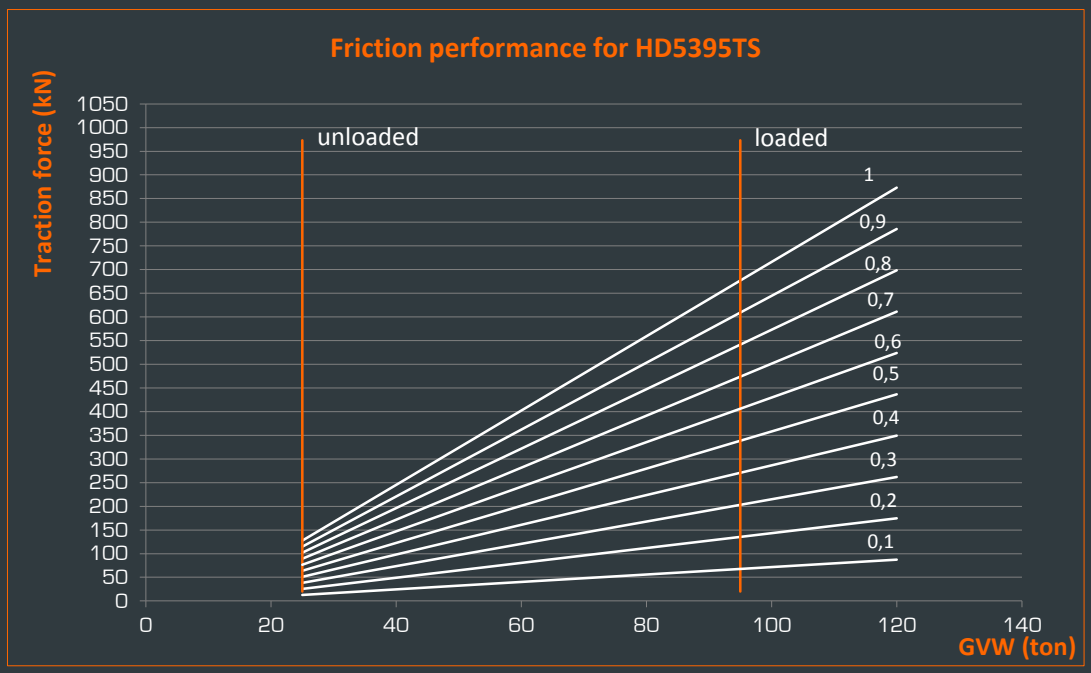

To determine the retarding performance for continuous operation:
Read in the second graph from the top of the graph from gross weight down to the percentage of effective grade. This point must be below the limit line from the first graph. From this weight – resistance point, read horizontally to the left curve with the highest obtainable gear, than down to maximum speed.

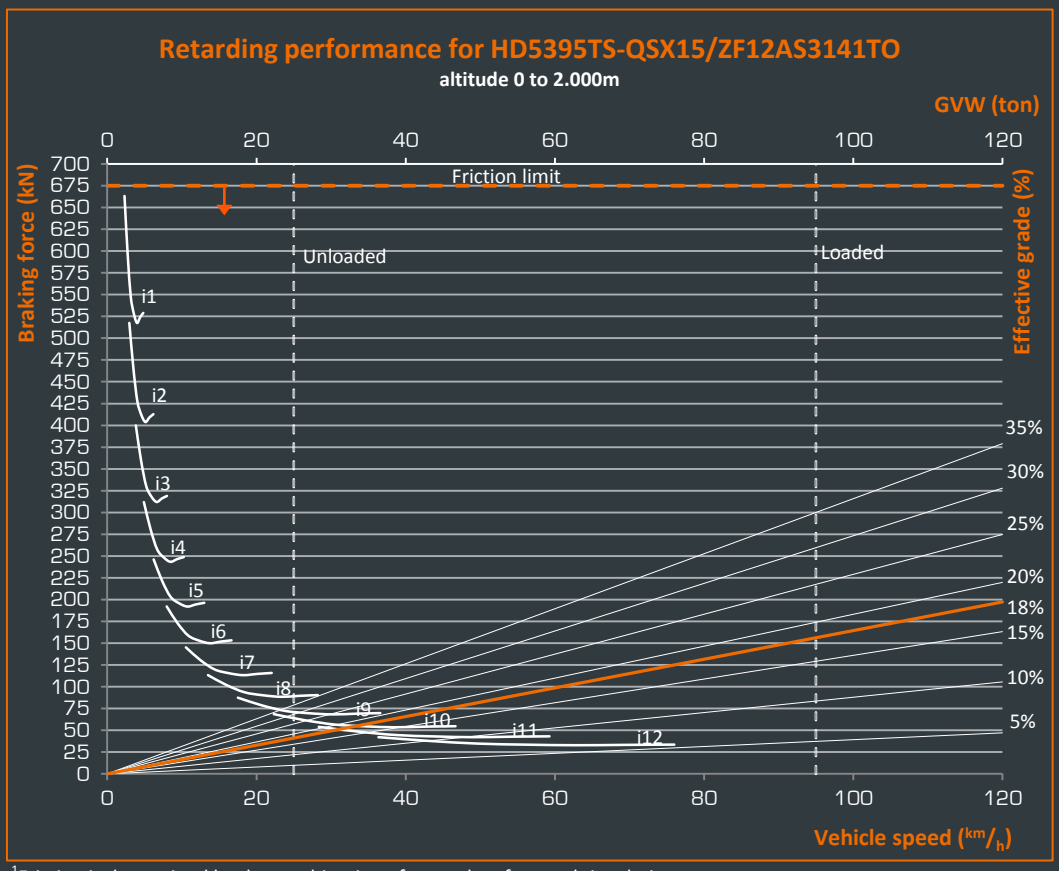

[1]Friction is determined by the combination of ground surface and tire choice.
Specifications as mentioned above, maximum grade defined at 18% at maximum GVW. At grades above 18% weights must be limited (defined by application).

https://truckmanualshub.com/

The speed performance for the continuous operation is limited by the friction coefficient. To determine the retarding speed in the second graph first set the limitations for the friction coefficient in the first graph. Use the traction limitation in the second graph by moving the orange dotted line downwards.

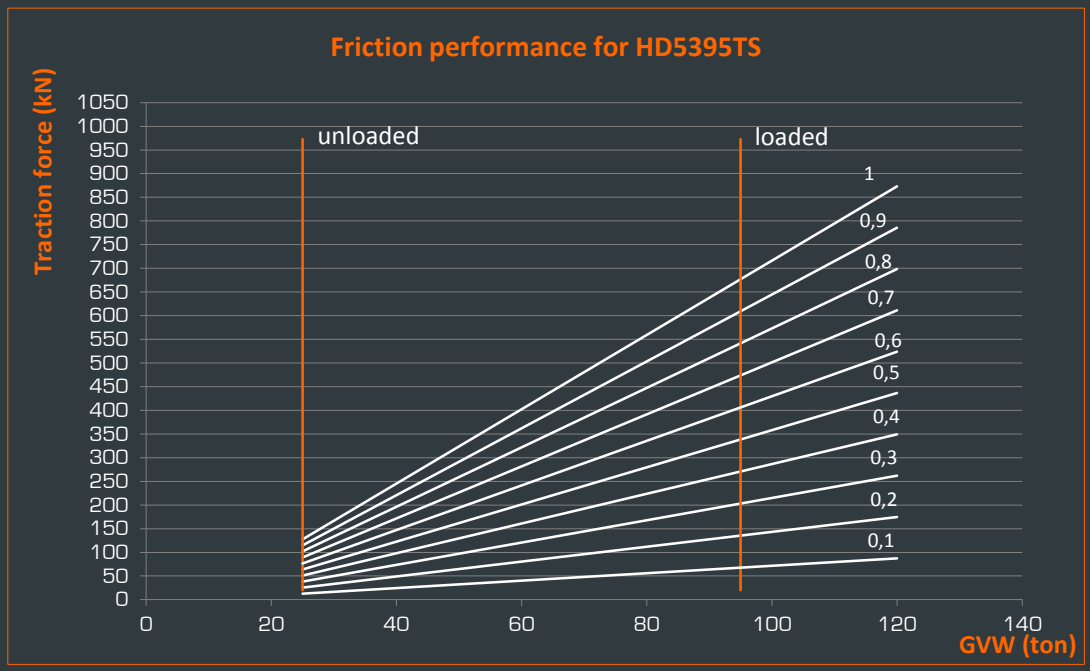

To determine the retarding performance for continuous operation:
Read in the second graph from the top of the graph from the gross weight down to the percentage of effective grade. This point must be below the limit line from the first graph. From this weight – resistance point, read horizontally to the left curve with the highest obtainable gear, than down to maximum speed.

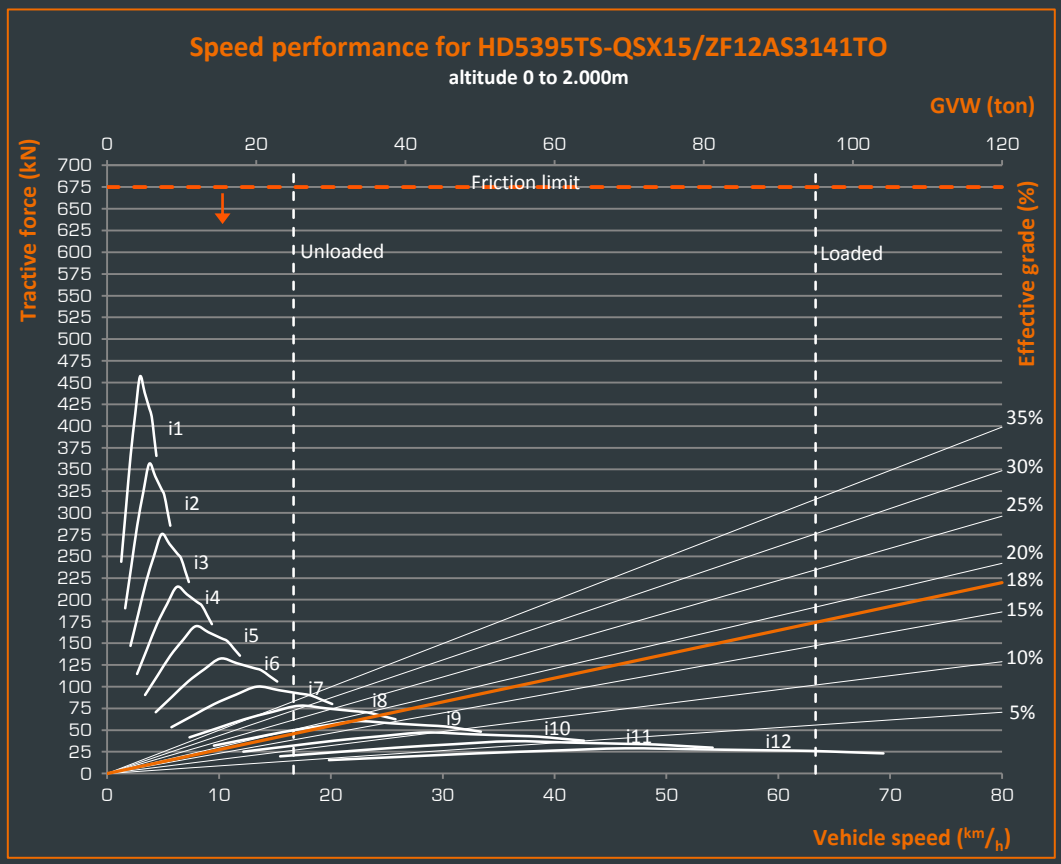

1Friction is determined by the combination of ground surface and tire choice.
Specifications as mentioned above, maximum grade defined at 18% at maximum GVW. At grades above 18% weights must be limited (defined by application).

https://truckmanualshub.com/

DUMP – TIPPING BODY

-	Inside width upper edge; 2.900mm, width lowest edge 2.650mm
-	Volume: +/- 32m3 (water)
-	One cylinder at each side of the tipper
-	Material; Hardox 450 8mm (last 2.500mm from floor 10mm)
-	Heavy duty top (height 3.600mm)
-	Canopy
-	Rear hatch automated opening with chain 8mm Hardox 450
-	Rear hatch locked to keep it in place
-	Mudguards over axle 2 and combined over axle 3 – 5
-	Canopy height will be 4,25m
-	TIPPING UP +/- 29sec, DOWN +/-19sec.

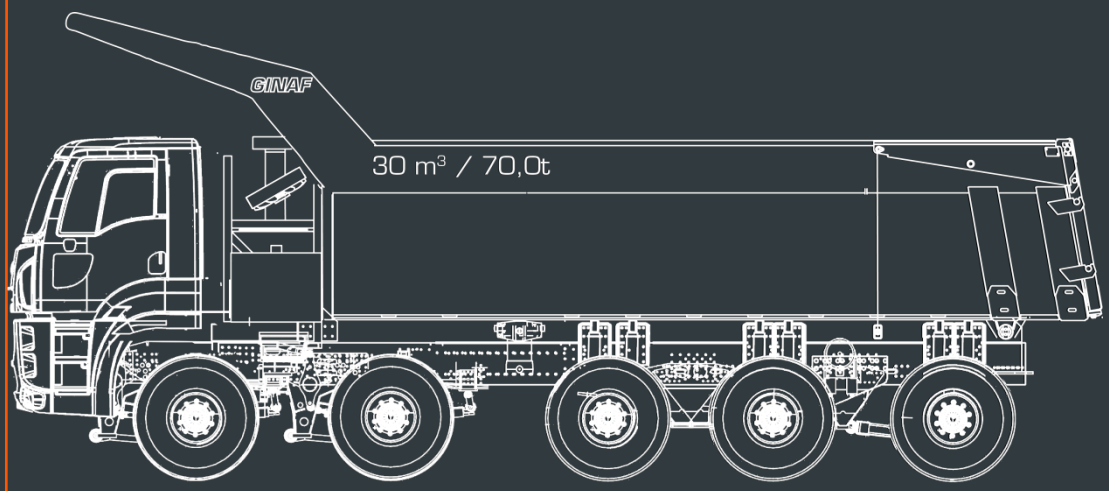

https://truckmanualshub.com/

DIMENSIONS

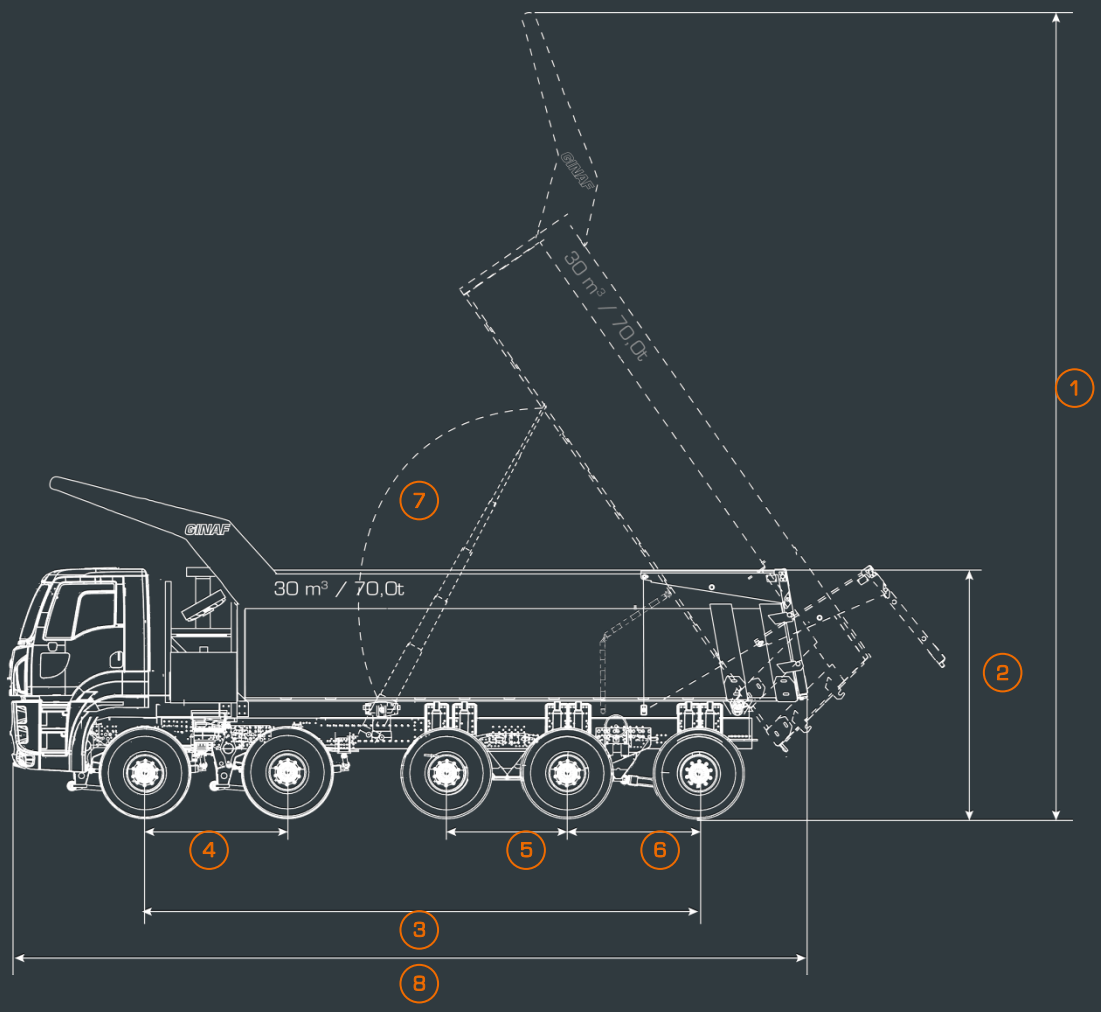

#1	Overall Height – Body Raised	10 650mm
#2	Loading Height	3 600mm
#3	Wheelbase	7 580mm
#4	Axle 1-2	1 950mm
#5	Axle 3-4	1 650mm
#6	Axle 4-5	1 800mm
#7	Tipping Body Angle	57°
#8	Overall Length	10 950mm
#9	Front Canopy Height	4 450mm
#10	Centerline Front Tire Width (Centerline Rear Dual Tire Width)	2 272mm (2 070mm)
#11	Overall Rear Tire Width	2 913mm
#12	Outside Body Width	2 950mm

All dimensions are approximate