https://truckmanualshub.com/

SUNWARD

Operation and Maintenance Manual

SWL SERIES SKID STEER LOADER

TABLE OF CONTENTS

1 INTRODUCTION 5

1.1 MODELS AVAILABLE 5
1.2 ABOUT THIS MANUAL 5
1.3 TREATMENT OF THIS MANUAL 5
1.4 UNITS 5
1.5 DEFINITION OF “LEFT” SIDE AND “RIGHT” SIDE 5
1.6 PRECONDITION TO USE THE MACHINE 6
1.7 SIGNALS 6

2 SECURITY 8

2.1 MEANING OF THE SAFETY SIGNS 8
2.1.1GENERAL SIGNS 8
2.1.2 ACOUSTIC SIGNS 10
2.2 LOCATION OF THE SAFETY LABELS 11
2.3 GENERAL PREVENTION 11
2.3.1 GENERAL SAFETY RULES 11
2.3.2 CLOTHING AND PERSONAL PROTECTION 11
2.3.3 ENTER AND LEAVE THE MACHINE 12
2.3.4 PREVENTION OF FIRE TO FUEL AND OIL 13
2.3.5 PREVENTION OF BURNS 13
2.3.6 PREVENTION OF DAMAGE OF WORKING EQUIPMENT 14
2.4 PREVENTIONS DURING OPERATING 14
Machine allowable circumstance condition 14
2.4.1 SAFETY CHECK BEFORE WORKING 14
2.4.1.1 CHECK THE WORKING SITE 14
2.4.1.2 CHECK THE MACHINE 14
2.4.2 STARTING THE ENGINE 15
2.4.3 MOVING THE MACHINE 15
2.4.3.1 MOVING ON SLOPES 16
2.4.3.2 MOVING ON UNUSUAL SURFACES 16
2.4.3.3 PARKING THE MACHINE 16
2.4.4 PREVENTION OF ELECTRIC SHOCK 17
2.4.5 LIMITS OF THE MACHINE 17
2.4.6 TRANSPORTATION 18
2.5 MAINTENANCE PREVENTION 18
2.5.1 GENERAL RULES 18
2.5.2 RUNNING THE ENGINE DURING THE MAINTENANCE 19
2.5.3 WORKING UNDER THE WORKING EQUIPMENT AND MACHINE 19
2.5.4 SAFETY RULES FOR HIGH-PRESSURE OIL AND HOSE 19
2.5.5 PREVENTION ON THE STARTER AND ALTERNATOR 20
2.5.6 PREVENTION OF BATTERY HAZARD 20
2.5.7 PRECAUTION DURING INFLATING THE TIRES 21

3 GENERAL DESCRIPTION OF THE MACHINE 22

3.1 DESCRIPTION OF THE MACHINE 22
3.1.1 FRONT VIEW 22
3.1.2 REAR VIEW 22
3.1.3 MACHINE DISTRIBUTION 23
3.2 SPECIFICATION 24
3.2.1 GENERAL DATA 24
3.2.2 OVERALL DIMENSION 25
3.2.3 ENGINE 27
3.2.4 ELECTRIC SYSTEM 27
3.3 MACHINE IDENTIFICATION 28
3.3.1 MACHINE IDENTIFICATION PLATE AND PRODUCT IDENTIFICATION NUMBER (PIN) 28
3.3.2 MACHINE SERIAL NUMBER 28
3.3.3 ENGINE IDENTIFICATION PLATE 29
3.3.4 SERIAL NUMBER OF CHASSIS 29
3.4 SECURITY DEVICES 29

3.4.1 RESTRAIN BAR 29
3.4.2 BOOM LOCKS 30
3.4.3 RADIATOR OVERTURNING PROTECTION LOCK 30
3.4.4 RETAINER OF AUXILIARY CONTROL PEDAL 30
3.4.5 CABIN OVERTURNING PROTECTION LOCK 30
3.4.6 SEAT 30
3.5 INSTRUMENTS 32
3.6 JOYSTICKS 35
3.7 SWITCHES AND BUTTONS 37
3.8 CABIN 39
3.9 REAR WINDOW 39
3.10 SEAT BELT 39
3.10.1 FASTEN THE SEAT BELT 39
3.10.2 UNDO THE SEAT BELT 39
3.11 AUTO-LEVELLING SYSTEM 40
3.12 FLOATATION SYSTEM 40
3.13 FUSES 40
3.14 RELAYS 42
3.15 DOCUMENTS CASE 42
3.16 ENGINE HOOD 42
3.17 REAR COVER 43
3.18 BATTERY 43

4 OPERATION OF THE MACHINE 43

4.1 RUNNING-IN 43
4.2 CHECKS BEFORE OPERATION 43
4.3 STARTING THE ENGINE 44
4.3.1 NORMAL STARTING 44
4.3.2 STARTING THE ENGINE IN COLD WEATHER 44
4.4 WARM UP THE ENGINE AND THE HYDRAULIC SYSTEM 45
4.5 STOPPING THE ENGINE 45
4.6 MACHINE MOVEMENT 45
4.7 OPERATION OF WORKING EQUIPMENTS 48
4.8 LOADING 49
4.8.1 LOADING ON LEVEL FLOOR 49
4.8.2 LOADING ON SLOPES 49
4.9 DIGGING 50
4.10 LEVELLING UP 50
4.11 PARKING THE MACHINE 51
4.12 ACCELERATION 51
4.13 TRANSPORTING THE MACHINE ON OTHER VEHICLES 52
4.13.1 LOADING THE MACHINE 52
4.13.2 SECURING THE MACHINE 52
4.13.3 UNLOADING THE MACHINE 53
4.14 LIFTING THE MACHINE 53
4.15 USE OF THE QUICK COUPLER 53
4.15.1 HITCH THE BUCKET 54
4.15.2 UNHITCH THE BUCKET 55
4.15.3 AJUST THE QUICK COUPLER MECHANISM 55
4.16 USE OF AUXILIARY PEDAL 55
4.17 HIGH FLOW SYSTEM 56
4.18 MAXIMUM IMMERSION IN A FLUID 56
4.19 MOVE THE MACHINE WITH TOWING HOOK 56
4.20 STARTING THE MACHINE WITH BOOSTER CABLES 57
4.21 LONG-TERM STORAGE 57
4.21.1 BEFORE LONG-TERM STORAGE 57
4.21.2 DURING THE PERIOD OF INACTIVITY 58
4.21.3 AFTER THE PERIOD OF INACTIVITY 58

5 MAINTENANCE 58

5.1 REQUIREMENT SERVICE 58

5.2 ADVICE FOR THE MAINTENANCE 59
5.3 GENERAL INFORMATION FOR CARRY OUT THE MAINTENANCE 60
5.3.1 OIL AND COOLANT AT CORRESPONDING ENVIRONMENTAL TEMPERATURE 60
5.3.2 CAPACITIES 61
5.3.3 CODIFICATION OF THE MAIN CHANGED PART 62
5.3.4 TORQUE FOR SCREWS 63
5.3.5 TOOL LIST 63
5.3.6 LUBRICATION POINTS 64
5.4 DESCRIPTION MACHINE FOR MAINTENANCE 64
5.4.1 ENGINE DESCRIPTION 64
5.4.2 HYDRAULIC SYSTEM DESCRIPTION 65
5.4.3 ELECTRICAL SYSTEM 65
5.4.4 SAFETY BELT 65
5.5 MAINTENANCE PLAN 65
5.5.1 BEFORE STARTING 68
5.5.1.1 CHECKING ENGINE OIL LEVEL 68
5.5.1.2 CHECKING ENGINE COOLANT LEVEL 68
5.5.1.3 CHECKING ENGINE FUEL LEVEL 68
5.5.1.4 CHECKING THE HYDRAULIC OIL LEVEL 68
5.5.1.5 CHECKING THE ELECTRIC CABLES 69
5.5.1.6 CHECKING THE TIRES 69
5.5.1.7 CHECKING THE SAFETY BELT 69
5.5.1.8 CHECKING THE LEAKING OF OIL 69
5.5.1.9 CHECKING THE QUICK COUPLER 69
5.5.1.10 ECKING THE WATER AND SEDIMENTS SEPARATOR 69
5.5.2 EVERY 50 HOURS OF OPERATION 70
5.5.2.4 CHECKING THE COOLER PIPES 70
5.5.2.5 CHECKING THE COOLANT LEVEL 70
5.5.2.6 CHECKING THE TIRE PRESSURE 70
5.5.2.7 GREASING THE PINS OF BOOM AND CYLINDERS 70
5.5.2.8 CHECKING THE WHEEL NUT DRIVING TORQUE 70
5.5.3 EVERY 100 HOURS OF OPERATION 71
5.5.3.1 CLEANING THE TERMINALS OF THE BATTERY 71
5.5.3.2 CLEANING THE OIL TANK'S BREATHER 71
5.5.3.3 CHECKING THE CYLINDER RODS 71
5.5.3.4 GREASING ALL OF PINS 71
5.5.4 VERY 250 HOURS OF OPERATION 71
5.5.4.1 CHECKING THE GEARING CHAIN TENSION 71
5.5.4.2 ADJUSTING THE CHAIN IF NECESSARY 71
5.5.4.3 CHECKING THE FAN BELT 72
5.5.4.4 CLEANING THE RADIATOR 72
5.5.4.5 CHECKING THE OIL LEVEL IN THE GEAR CHAIN 72
5.5.4.6 CHANGING THE ENGINE OIL 72
5.5.4.7 CHANGING THE ENGINE OIL FILTER 72
5.5.4.8 CHANGING THE FUEL FILTER 73
5.5.4.9 CHECKING THE NUT TORQUE OF THE HYDARULIC MOTOR AND THE HUB HOLDING TO THE CHASSIS 74
5.5.5 EVERY 500 HOURS OF OPERATION 74
5.5.5.1 CLAEN THE FUEL-WATER SEPARATOR 74
5.5.5.2 CHECK THE TIGHTENESS OF PUMP FIXING SCREWS 75
5.5.5.3 CHECKING THE FLUID LEVEL OF THE BATTERY 75
5.5.5.4 CHANGING THE HYDRAULIC OIL FILTER 75
5.5.6 EVERY 1000 HOURS OF OPERATION 75
5.5.6.1 CHANGING THE OIL IN THE GEAR CHAIN BOX 75
5.5.6.2 CHANGING THE HYDARULIC OIL AND CLEAN THE SUCTION 76
5.5.6.3 CHANGING THE AIR FILTER 76
5.5.6.4 CHECKING THE PUMP'S PRESSURE AND THE VALVE 77
5.5.6.5 CHANGING THE HYDRAULIC OIL TANK BREATHER 77
5.5.6.6 CHECKING THE TIGHTNESS OF THE CYLINDER HEAD SCREW 77
5.5.6.7 CHECKING THE LOOSENESS OF THE VALVE 77
5.5.7 EVERY 2000 HOURS OF OPERATION 77
5.5.7.1 CHANGING THE COOLANT 77
5.5.7.2 CHECKING THE STARTER AND ALTERNATOR 77
5.5.8 WHEN REQUIRED 77
5.5.8.1 DRAINING THE FUEL TANK 77
5.5.9 TROUBLE SHOOTING 78
6 OPTIONAL EQUIPMENT 82

6.1 SECURITY MEASURES 82
6.2 SECURITY MEASURES FOR INSTALLATION 83
6.3 PERFORMANCE OF THE OPTIONAL EQUIPMENT 83
6.4 REPLACEMENT OF OPTIONAL EQUIPMENT 83
6.5 CONNECTION OF HYDRAULIC CIRCUIT 84
6.5.1 CONNECTION OF STANDARD HYDRAULIC CIRCUIT 84
6.5.2 CONNECTION OF HIGH FLOW HYDRAULIC CIRCUIT (FOR OPTION WITH HIGH FLOW SYSTEM) 84

7 OTHER DATA 85

7.1 ELECTRIC DIAGRAM 85
7.2 ELECTRIC ELEMENTS CHART 86
7.3 HYDRAULIC DIAGRAM 87

8 INFORMATION OF MANUFACTURER 88

1 INTRODUCTION

1.1 MODELS AVAILABLE

This manual is special for the SWL series skid-steer loader. A series of skid-steer loaders "SWL" are developed by SUNWARD INTELLIGENT EQUIPMENT CO., LTD, SUNWARD INTELLIGENT EQUIPMENT CO., LTD own all intelligence property related to this machine.

1.2 ABOUT THIS MANUAL

This manual contents all the information about the SWL machine. The safety regulations, description, use and maintenance instructions are included in this manual. SUNWARD INTELLIGENT EQUIPMENT CO., LTD supply this manual together with the spare parts book. He provides the user all information related to the SWL skid-steer loader and all safety regulations.

For more information, please contact your SWL dealer. The dealer knows how to get the best performance of the machine and how to use the machine correctly in any case.

1.3 TREATMENT OF THIS MANUAL

This operation and maintenance manual must be handled with great care and always kept in the machine, so that the operator can consult it at any moment. There is a compartment special for operation manual and s pare parts inside cabin. It locates on the behind of the seat. See the right picture. The operation manual must be always kept in this case.
In case of damage or lose this manual, request to SUNWARD INTELLIGENT EQUIPMENT CO., LTD or the SWL dealers for a new one.

1.4 UNITS

In this manual we have taken the international unit system. We are using millimeter for distance, liter for volume, degree for angle, etc.

ITEM	UNIT	SYMBOL
Distance	Millimeter	mm
Volume	Liter	L
Angle	Degree	°
Temperature	Celsius degree	°C
Sound	Decibel	dB

1.5 DEFINITION OF "LEFT" SIDE AND "RIGHT" SIDE

In this manual, "left" and "right" imply your left hand side and right hand side when you are seated properly in the machine. It is also showed in the picture below.

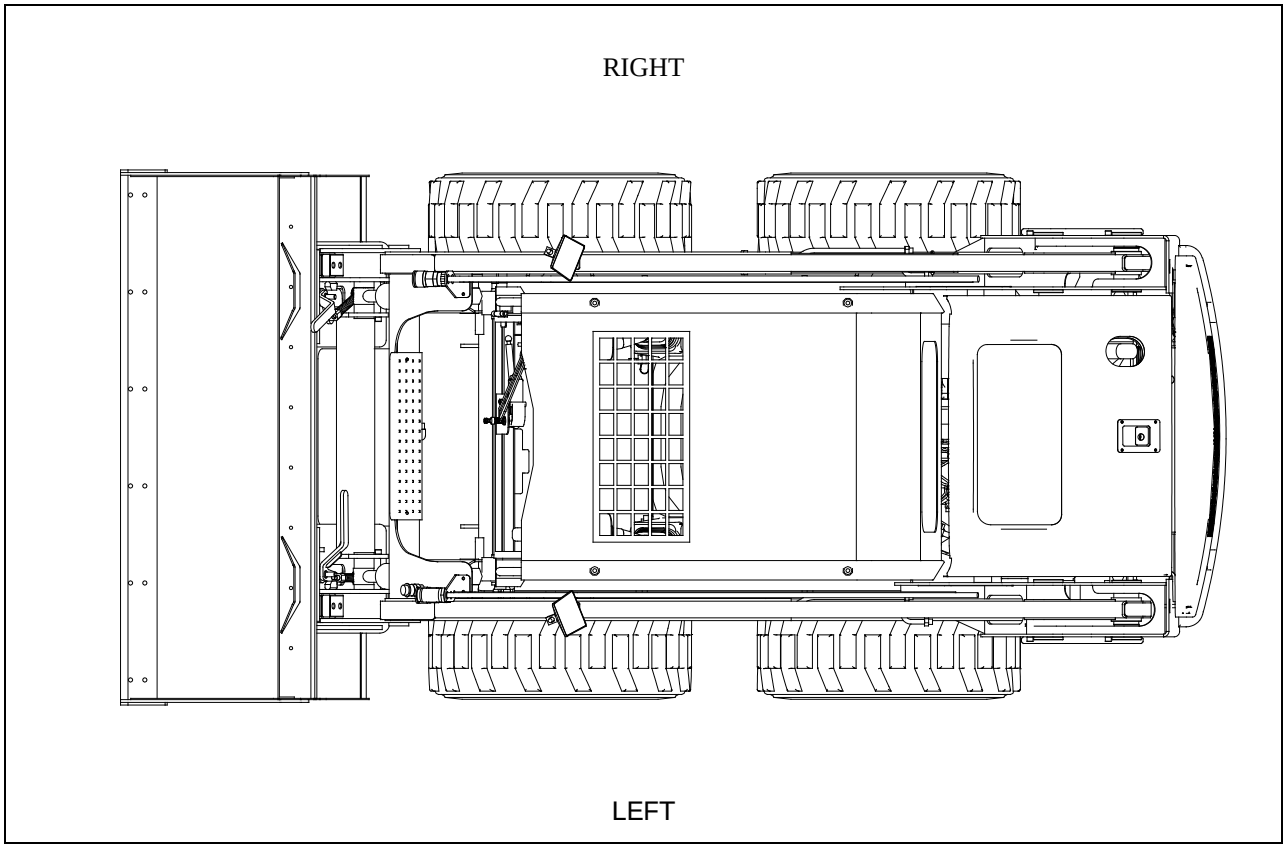

1.6 PRECONDITION TO USE THE MACHINE

To use this skid-steer loader properly and safely, operator must know well about this machine and have basic experience on using this kind of machine. If you are a new operator of skid-steer loader, please do not work with this machine before you get a special training on it.

The operator must take special attention on the security recommendation in order to preserve his security and the security of persons around him.

Do not work with the machine until you are sure that you can control it properly. Do not begin a work until you are sure there is no danger for you and for people around you.

If you have any doubt regarding the safety regulations, please contact your SWL dealer.

1.7 Signals

To help you to use machine safely, we have described many safety precautions in this manual. Also many precaution labels are put on the machine. Many different signal words are used in the manual and on the labels.

The following signal words are used to inform you that there is a potential hazardous situation that may lead to personal injury and damage. In this manual and on the precaution labels on the machine, the following signal words are used to express the level of the potential hazardous.

If not avoided, it has great possibility to lead to serious injuries or death to the operator (or other persons). It is used to express the most extreme dangerous situation.

WARNING	If not avoided, this situation could cause serious injuries even death.
CAUTION	If not avoided, this situation may cause minor or moderate injury to operator (or other persons) or damage to the machine.

There are other signal words showed under to indicate precautions that are useful for operator.

NOTICE	It is used for precautions that must be taken to avoid actions what could shorten the life of the machine.
REMARKS	It is used for information that is extremely useful to know.

The safety message may not include all the possible safety precautions. It is impossible to describe all the potential hazard may appear during the operation or maintenance. For any question regarding the safety regulation please contact your dealer.

2 SECURITY

This section describes the possible hazards that may appear during the operation and maintenance of the machine. Authorized additional equipments have their manual given together with the equipments.

2.1 MEANING OF THE SAFETY SIGNS

Safety precaution labels are fixed to the machine to warn about possible hazards that may cause personal injuries or even death. They are placed where the possible danger is. Before using the machine make sure you understand all the security labels. Keep all the labels clean and readable. Change all the damaged labels.

2.1.1GENERAL SIGNS

The following table shows the different labels fixed on the machine and the respective meanings.

GENERAL LABELS	
Moving crawlers, when Entanglements in can cause serious injury	High temperature
See manual book	Note
	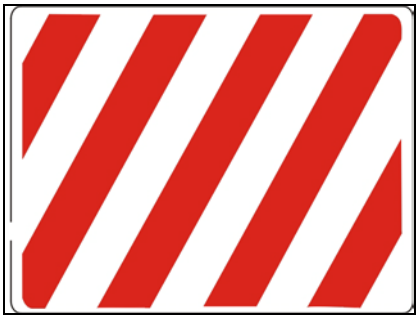
Float	Tail warning

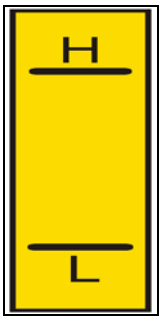	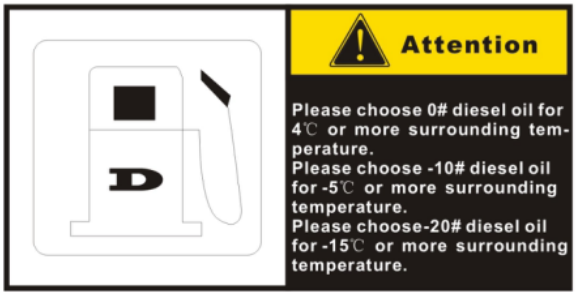
Oil level	Diesel Oil
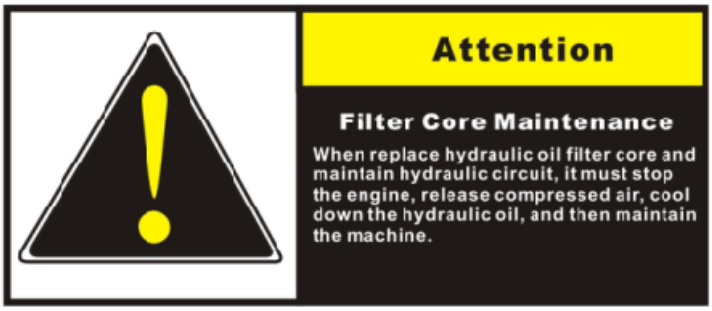	
Oil filter	Safety pin for boom
Lifting points	Drag position
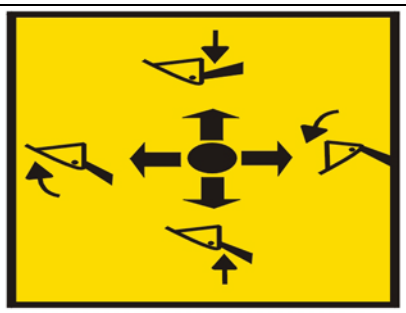	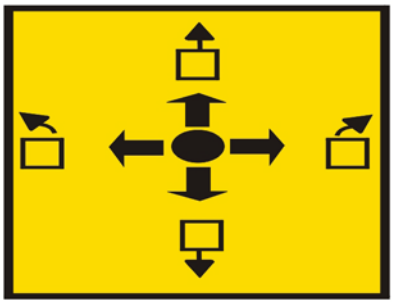
Operation direction	Operation direction

Security button	Emergency exit
Accelerator	Power switch
Diesel fuel	Hydraulic oil

2.1.2 ACOUSTIC SIGNS

The following table shows the different acoustic labels fixed on the machine and the respective meaning.

ACOUSTIC LABELS	
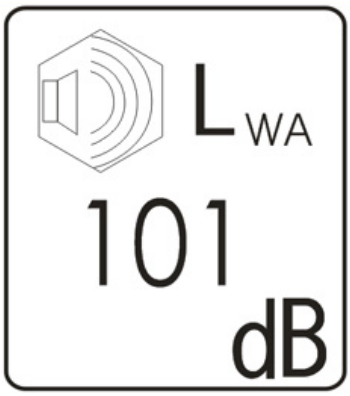	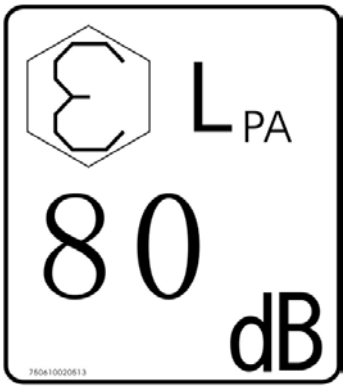
The max noisy level out of cabin.	The max noisy level in cabin.

2.2 LOCATION OF THE SAFETY LABELS

The safety labels were located in related striking position.

2.3 GENERAL PREVENTION

2.3.1 GENERAL SAFETY RULES

The following items are extremely important. Operators must read with great care and follow them while operating and performing maintenance.

- Only authorized and experienced personnel can use or maintain the machine.
- The using and maintenance must be taken follow with the safety rules describe in this manual.
- Use the machine only when the machine is in good operating condition.
- Don't use the machine for the tasks exceed its capacity.
- Operate the machine only when the operator is seated correctly in the driving position.
- Before do any maintenance, position the machine on a firm and level surface, lower working equipments to the ground, engage the safety lock of working equipment, stop the engine.
- It is forbidden to modify the connections and safety settings of the hydraulic system. Before do any modification, please consult your dealer. Any unauthorized modification may lead to serious injury to operator or damage to the machine. SUNWARD INTELLIGENT EQUIPMENT CO., LTD will not take the responsibility to the result caused by this kind of unauthorized modification.
- Install only authorized auxiliary equipments. Any additional equipment more than the authorized auxiliary equipments list in this manual may not perform well even cause damage to the machine and injury to persons. See the list of authorized auxiliary equipments.
- Before travel on the road, make sure the lights, signaling and safety device are in good condition and engage relative safety devices.
- Do not use the machine before read and understand this manual. Any inappropriate use of this machine could be very dangerous for the operator and the person around the machine. Many of the accident are caused by insufficient knowledge of the safety regulations described in this manual.
- It is extremely dangerous operate the machine under the effect of alcohol or drugs. Do not take alcohol, medicine what makes you sleepy or drugs before or during use the machine.

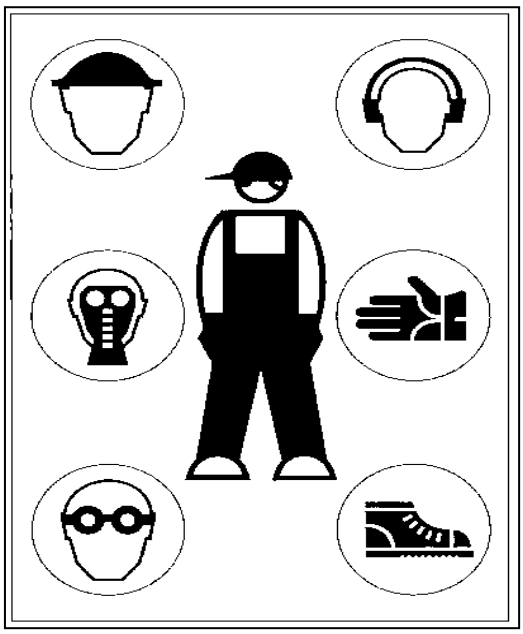

2.3.2 CLOTHING AND PERSONAL PROTECTION

- Inappropriate clothing may lead to injury to the operator. Please wear in the protective clothing while operating or performing maintenance such as hardhat, goggles glasses, mask gloves, safety shoes and headphones.
- If you have long hair, tie up them before approach the machine since they can get entangled in the

moving part of the machine and cause serious injuries and damage.

- When working for 8 hours with a noise exceeding 90 dB, it is necessary to use headphones.
- When working in a special dangerous area, additional protections could be required according to the conditions.
- The machine is considered fire protection request fully. Using good fire-resistant material which meet ISO 3795 standard, combustion rate is not over 200 mm/min. Meanwhile, the machine is set enough space to mount extinguisher and supplied extinguisher operating manual in order to prevent fire accident.

2.3.3 ENTER AND LEAVE THE MACHINE

Use the appropriate footplates and handles showed in the following picture while entering and leaving the machine.。

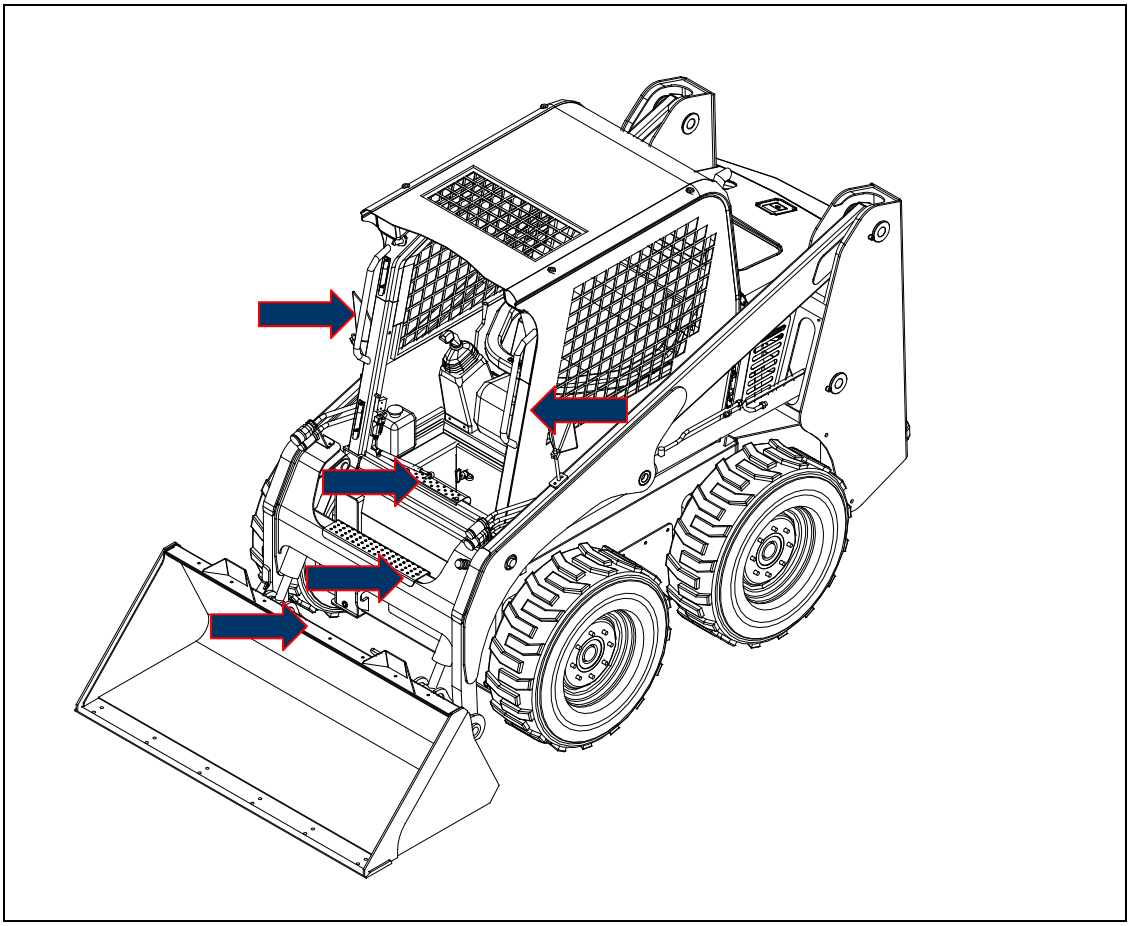

- Enter and leave the machine only when the machine is not moving unless it is in emergency.
- Never hold on the joysticks.
- Use always the appropriate handles while entering and leaving the machine.
- Always be carefully while entering and leaving the machine. Keep your body balance during the whole processes of entering and leaving the machine.

- Before enter and leave the machine, make sure the footplate and handles are not covered with oil, grease, ice or other slippery matter. In case it happens, clean the slippery matter carefully immediately.
- Take great care in case the machine is wet. It could be very slippery.

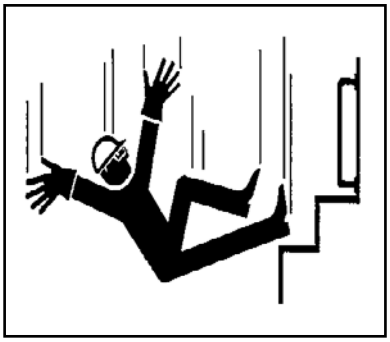

Before leave machine, carry out the following procedures in the sequence.

1) Park the machine in a safe position.
2) Lower the working equipment to the ground.
3) Engage the parking brake.
4) Engage the auxiliary equipment control pedal retainer.
5) Raise the restrain bar to upward.
6) Stop the engine.

2.3.4 PREVENTION OF FIRE TO FUEL AND OIL

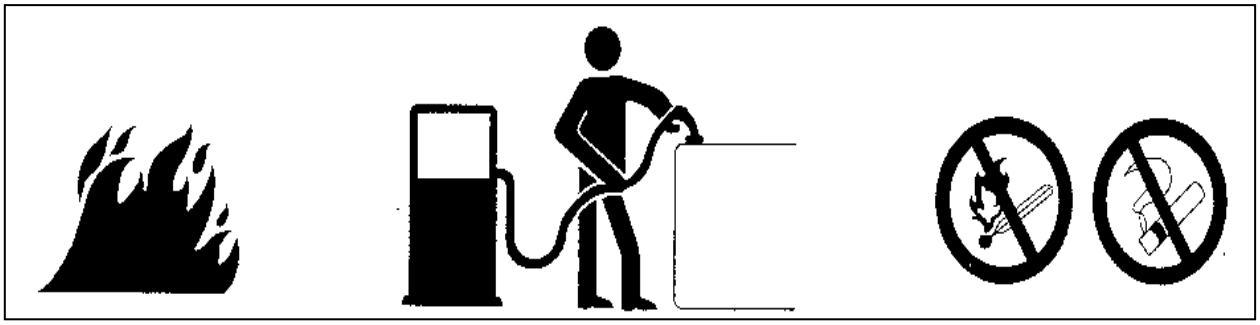

- Fuel and oil are easily to cause fire if they meet flame.
- Keep always flame away from the fuel and oil.
- Stop the engine and never smoke during refueling.
- Only do the refilling fuel and oil in the well ventilated areas.
- Close well the safety cap after refilling oil or fuel.
- Do not fill the tanks in order to leave room for the fuel expansion.
- If some fuel or oil is spilled wipe it up immediately.

2.3.5 PREVENTION OF BURNS

- After operating for a period, the engine, coolant, hydraulic oil, engine oil, radiator and pumps are hot. Do not touch them until they cool down.
- In case of entailing working with hot oil, hot coolant or hot hydraulic oil, wear gloves, heavy clothing and safety goggles before do any check or maintenance.

- Loosen the coolant safety cap slowly when the coolant is hot to release the residual pressure inside the tank before open it. If it is hot it may spurt out and cause serious burns.
- Before checking the coolant level, the hydraulic oil level and the engine oil level, stop the engine and wait till they cool down.

2.3.6 PREVENTION OF DAMAGE OF WORKING EQUIPMENT

- Do not stand in the area that the working equipment can reach when the machine is operating. It may cause serious injury or even death.
- Before perform working equipments, the operator must make sure that nobody is in the dangerous area that working equipment can reach.
- Try to lower the working equipment to the ground every time when you park the machine.

- During maintenance, make sure the equipment is locked correctly before go into the area under lifted working equipment.

2.4 PREVENTIONS DURING OPERATING

Machine allowable circumstance condition

There is no need to do any adjustment when working under altitude of 2300meters。
The working temperature must be above -30 ℃， and should fully warm the machine before starting the machine to work. The machine can be used in whole day, not only raining or snowing, but must follow the rules of safety operation.

2.4.1 SAFETY CHECK BEFORE WORKING

2.4.1.1 CHECK THE WORKING SITE

- Before any work, do thorough check on the working site. Make sure the working site ground conditions are available for the machine to work on.
- Make sure there is enough space for the machine to go into the working site and come out of the working site after the work.
- If there are water lines, gas lines, telephone lines or electrical lines are located under the working site. Contact the relevant companies to find out the exact position of the lines and keep them ineffective during whole operations.

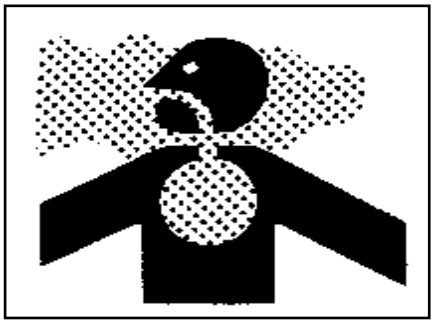

- If you are going to work in a room on poorly ventilated place, proper additional ventilation must be taken while working. The exhaust of engine can be harmful to persons around.
- Never use the machine in a flammable atmosphere, for example explosive vapour, gases, or dust that may cause explosions.

2.4.1.2 CHECK THE MACHINE

- Take a walk around check on the machine before work. Make sure that none component of the machine is damaged. Repair or replace the damaged parts if it is necessary.

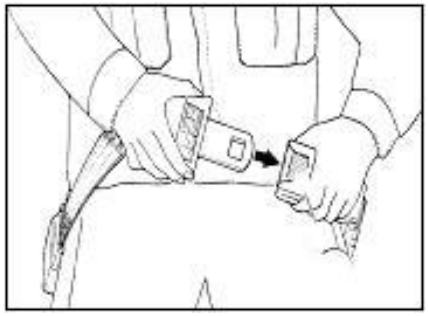

- Make sure that lights are in good condition, rear-view mirrors are clean and fix in the good position suitable for you, windshield wipers work properly before starting work.
- Keep the machine clean before work. Wipe up the leakages of oil and fuel before work. It may cause fire.

2.4.2 STARTING THE ENGINE

- Start the engine only when you are seated properly and with fastened seat belt.
- When starting the engine, engage the horn to give an alert to the persons around that you are going to operate the machine.
- Always follow the instructions of starting engine described in the section 4.3 When it is necessary to start the engine with booster cables, please carry out the follows. Wrong connecting method will cause battery exploding.

1) Always wear safety goggles and rubber gloves when starting the machine with booster cables.

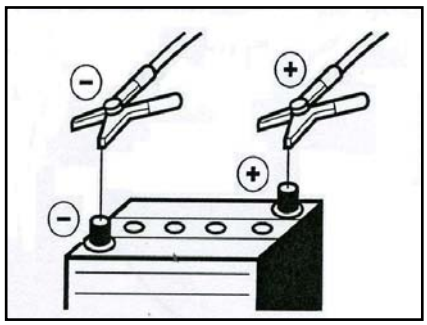

2) Two persons are necessary to carry out the starting with booster cables, one sitting in the seat and the other one working with the battery.
3) When starting from another machine's battery, do not touch the two machines. Be sure that the normal battery voltage is same as the problem machine battery voltage.
4) When connecting the cables, turn ignition keys of both the problem machine and normal machine to the position of OFF.
5) The correct connecting method is parallel (positive to positive and negative to negative).
6) Connect the positive (+) cable first when installing the booster cables. Disconnect the negative (-) cable fist when removing them.

2.4.3 MOVING THE MACHINE

- Before move the machine, engage the horn to give an alert to the persons around.
- When moving machine, lower the boom and fold the bucket completely to get better stability. Meanwhile it will keep enough space required by the movement.
- Keep low speed when moving on rough ground and in tough space.
- Before moving backward check the area behind the machine and make sure there are no persons or obstacles behind.

2.4.3.1 MOVING ON SLOPES

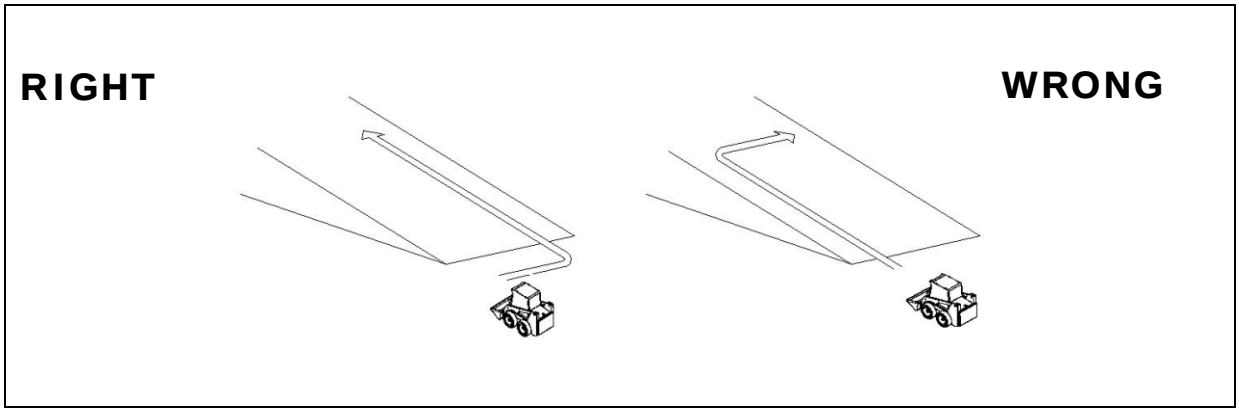

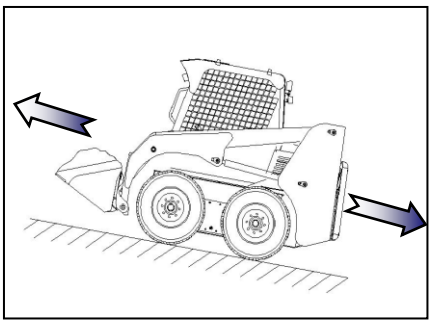

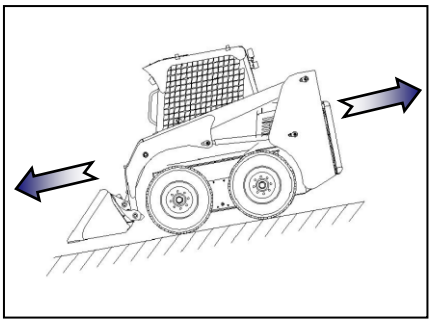

- Before move on slopes, make sure the parking brake is in good operation condition.
- Do not change the direction while moving on slopes and try to avoid moving obliquely on slopes.
- When the bucket is empty, keep the bucket downward. When the bucket is loaded, keep the bucket upward.
- Keep the bucket lowed and folded.
- Lower the bucket to the ground immediately in case of emergency to help stop the machine.
- When the slope is covered with wet grass or thick leaves, it becomes extremely slippery. Do not move the machine on this kind of slopes.
- Do not move the machine on a slope with inclination more than 15°.
- If the fuel gauge indicates in red range, immediately refuel. Inclination of machine may make the engine suck air and stop suddenly if the fuel level is low.

2.4.3.2 MOVING ON UNUSUAL SURFACES

- When moving on a slippery surface, keep low speed and avoid abrupt stops and turns.
- When moving on loose ground, do not move the machine too close to the edge of cliffs and deep ditches. It may cause overturn and fall down of the machine.
- When it is ineluctable to overpass an obstacle, make sure that the obstacle will not incline the machine more than 10°, keep low speed and keep the working equipment as low as possible to the ground.

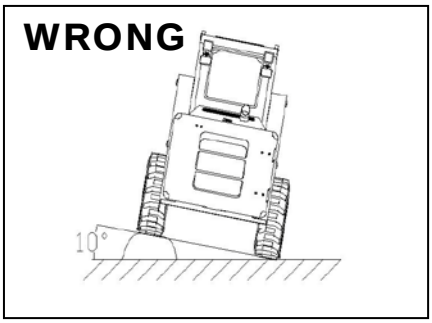

2.4.3.3 PARKING THE MACHINE

- Strictly follow the instructions of parking described in 4.5
- Engage the safety lock is unnecessary to keep the boom raised.
- When you are going to park the machine on public road, please provide the signalling device according to the local regulations.

- When it is necessary to park the machine on a slope, please follow the procedures following:
  1) Position the machine with the bucket downward.
  2) Lower the bucket and rotate it forward to rest it on the ground.
  3) Engage parking brake.
  4) Stop the engine.
  5) Put wedges under the wheels.

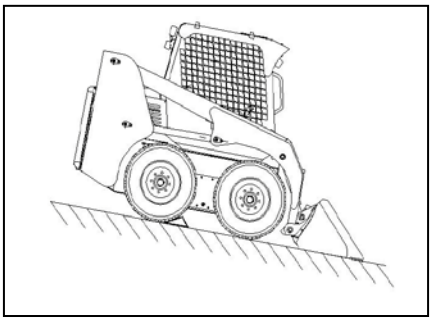

2.4.4 PREVENTION OF ELECTRIC SHOCK

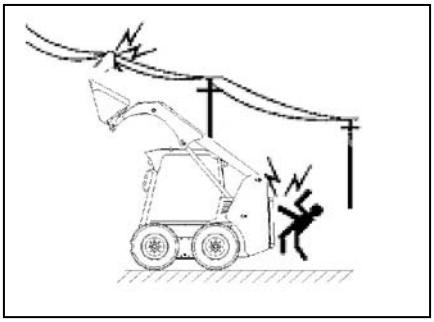

Voltage of Cables (kV)	1.0	6.6	33	66	154	275
Distance must be kept (m)	5.0	5.2	5.5	6.0	8.0	10.0

- Do not travel or operate the machine near the electrical cables. On the working sites where the machine may go close to electrical cables, follow the procedures below. Otherwise it is possible to get an electric shock, which may cause serious injury even death.
- Before starting working near the electrical cables, consult the power company what is the voltage with the cables and inform the power company of your coming work. If necessary, ask them to take actions.
- To prepare for any possible emergencies, wear rubber shoes and gloves. Prepare all things you need to call the power company immediately in case of accident.
- Even going close to the high-voltage cables can cause electric shock. Always maintain a safe distance (see the table up) from the cables.
- Use a signalman to give warning if the machine approached too close to the electrical cables.
- If the machine come too close to or entangled with the electrical cables, do not leave the cabin and let any person approach the machine until the electricity has been shut off.

2.4.5 LIMITS OF THE MACHINE

- This machine has been designed for one operator. More than one passenger on the machine can be extremely dangerous. Never transport more than one passenger with this machine.

- Overload could cause serious injuries or even death. Never overload the machine. For the detail capacity of machine, please refer the section of specification in this manual. Do not try to get a better efficiency of the machine by doing any unauthorized change.

2.4.6 TRANSPORTATION

Particular care must be taken when loading and unloading the machine.

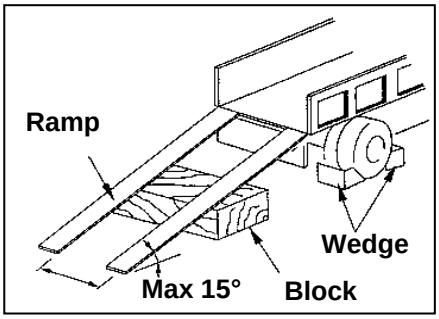

- Try to do the loading and unloading on a firm and level ground or a proper platform special for loading and unloading.
- Always use ramps with adequate strength and width. The surface of ramps must be clean. Slippery substance on the ramp surface must be wiped up before loading and unloading. Special treatment on the ramp surface is necessary in rainy day. The inclination of the ramps can't be over 15°.
- The transporting vehicle must be positioned by wedges under the wheels when processing loading and unloading. Make sure the ramps are securely fixed on the transporting vehicle.
- The ramps must be parallel and never do steering when traveling on the ramps. If the machine traveling direction is not accordant with the ramps, please get down ramps and try again.
- Always keep low speed when loading and unloading machine. Be careful that any part more than wheels touching goods around can change your traveling trajectory.
- It is advisable to keep the bucket downward on ramps when the bucket is empty. Also the gravity center of machine will change suddenly at the joint between ramps and transporting vehicle, travel extremely slowly on this point to keep the balance of machine.

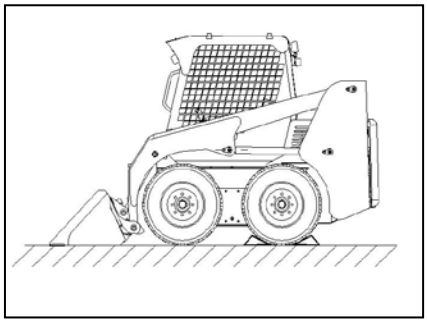

2.5 MAINTENANCE PREVENTION

2.5.1 GENERAL RULES

- To do any maintenance position the machine on a firm and flat surface, rest the equipments on the ground, engage the security locks, apply the parking brake and stop the engine. If necessary, put wedges under wheels to fix the machine.
- Before doing the maintenance, place the warning tag "DO NOT OPERATE" to the joysticks and ignition switch. Make sure nobody other who is not doing maintenance together with you operate the machine while you doing maintenance.

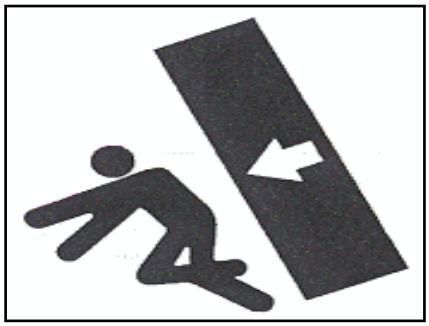

- Only authorized and duly trained personnel can do the service and repair. Only do the maintenance that you are certain. If you have any question, please consult the dealers.
- Keep the machine and the ambient clean. Keep the parts and tools in proper place.

- To prevent pollution, never deposit the fuel, oil and grease directly onto the ground. Use containers to keep the fuel, oil and grease and drain them according to the local regulations.

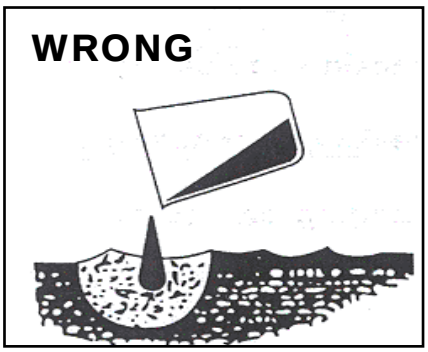

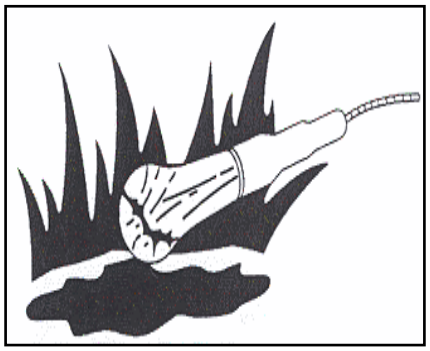

2.5.2 RUNNING THE ENGINE DURING THE MAINTENANCE

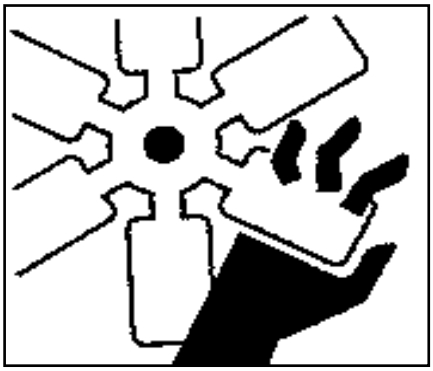

- If the maintenance must be carried out with engine running. Two workers are necessary. One worker must always seat in the operator's seat and be ready to stop the engine at any time.
- Keep the safety lock in function during the maintenance operations.
- When the engine is running, don't touch the rotating parts. The rotating parts like fan and fan belt are extremely dangerous because they can make you get caught. Be careful not to come close to them.

2.5.3 WORKING UNDER THE WORKING EQUIPMENT AND MACHINE

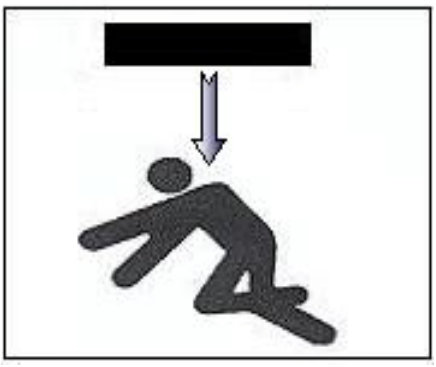

- If it is necessary to carry out service and maintenance under the working equipment or the machine, support the equipment and machine with block and stands strong enough to support the weight of the working equipment and machine.
- Lower the working equipment to the ground or the lowest position before working under the machine.

2.5.4 SAFETY RULES FOR HIGH-PRESSURE OIL AND HOSE

- The hydraulic system is always under internal pressure. Before do any inspecting or replacing hoses, always lower the working equipment and make sure that the pressure in the hydraulic circuit has been released.
- The high-pressure oil leakage from small holes can penetrate your skin or injury your eyes. Extreme care must be taken when you are inspecting high-pressure oil leakage. Wear goggles and thick gloves. Use a piece of cardboard to check oil leakage instead of your hands.
- Damaged hoses could be extremely dangerous and could cause serious injuries. Change the damaged hoses and connections as soon as possible.

- If you are hit by a jet of high-pressure oil and suffer injury to your skin and eyes, wash your skin and eyes with clean water and consult a doctor immediately.

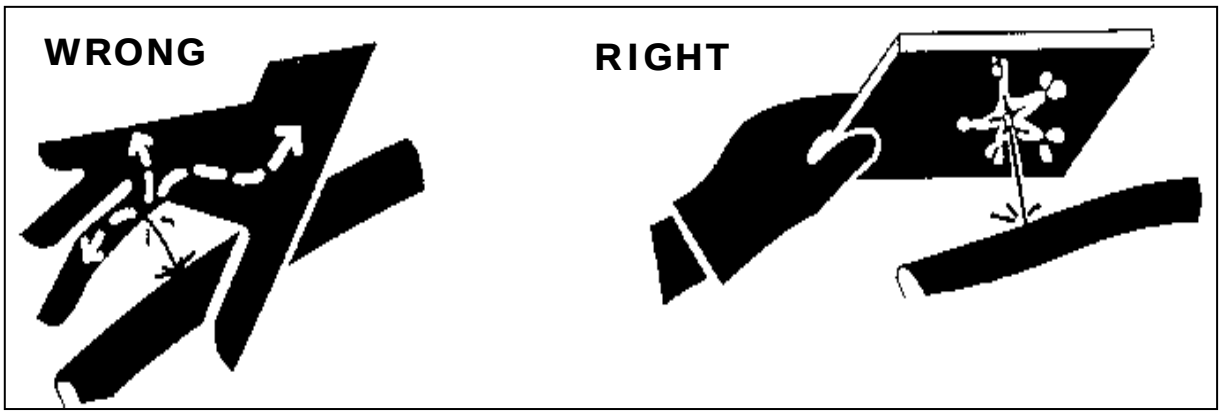

2.5.5 PREVENTION ON THE STARTER AND ALTERNATOR

- Before doing any check on the electric circuit, disconnect the battery in order to cut off the current.
- If some electrical welding has to be done on the machine, it is necessary to disconnect the battery and also the alternator.
- Never try to start the engine by manipulating the connexions of the starter. It will cause sudden machine move. It is very dangerous for the operators.

2.5.6 PREVENTION OF BATTERY HAZARD

Battery electrolyte contains sulphuric acid and generates flammable hydrogen gas. The sulphuric acid is extremely harmful to your body.

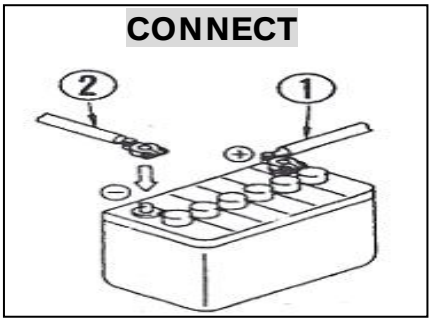

- Solutions for the accidents:
  1) If the electrolyte contact your eyes flush them immediately with plenty water and contact a doctor immediately. Acid could cause blindness.
  2) If some electrolyte contact with your skin, wash immediately with plenty water.
  3) If accidentally you ingest some acid drink a large quantity of milk, eaten eggs or vegetable oil and call immediately a doctor.

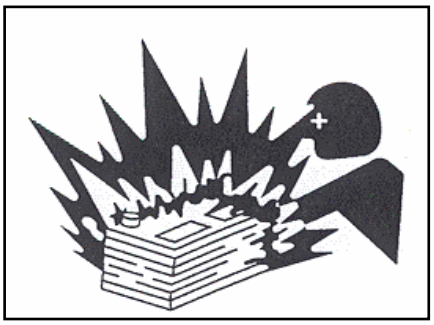

Please always follow with the following precautions:

- Always wear goggles and gloves when you are working with the battery.
- Stop the engine and remove the key before working on the battery.
- Never smoke and use any flame near the battery.
- Always tighten the terminals and caps securely. Loosen terminals or caps may cause fire and explosion.
- Do not let tools other metal objects make any contact between battery terminal.

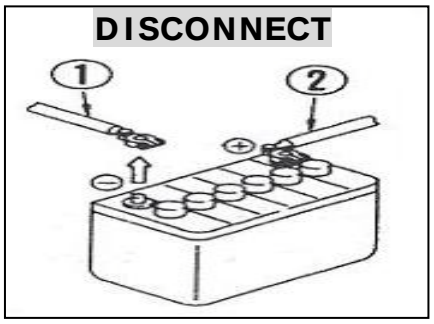

- Disconnect first the negative earth cable (-) and then the other positive cable (+).When connecting, connect fist the positive cable (+) and then the negative earth cable (-).
- If there is a welding operating on the machine, please disconnect the battery cables before it.

2.5.7 PRECAUTION DURING INFLATING THE TIRES

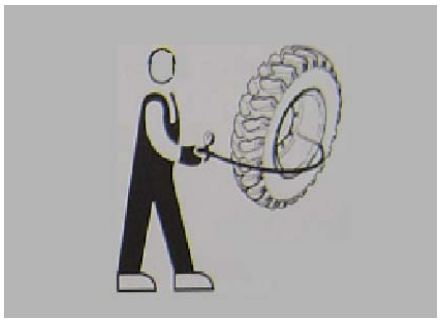

- Take into consideration that tires can burst while being inflating. Inflate the tires bit by bit.
- For inflating the tires use an air-compressing gun with extension and a gauge for control the pressure in the tire.
- Do the maintenance of the tires like described in the relating item of this manual.
- Do not stand very close to the tire during inflating the tire and make sure that nobody stands close.
- Follow the recommendation for the pressure given in the related item of this manual. Make sure that the tire pressure is the same on both sides of the machine.

3 GENERAL DESCRIPTION OF THE MACHINE

3.1 DESCRIPTION OF THE MACHINE

3.1.1 FRONT VIEW

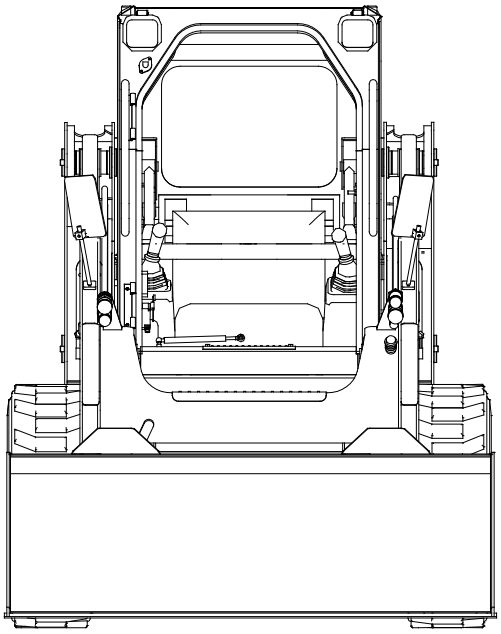

3.1.2 REAR VIEW

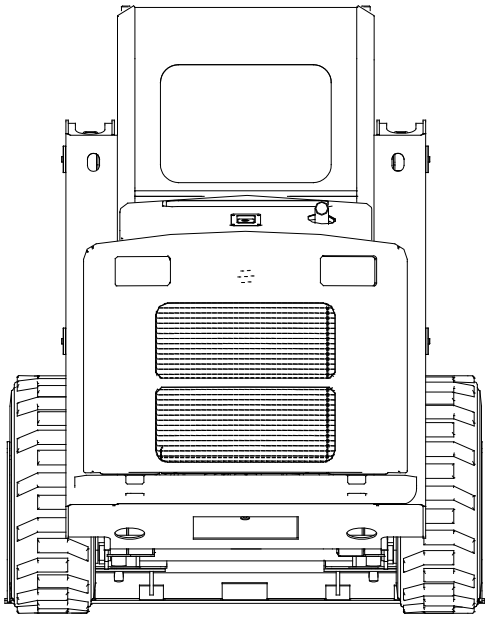

3.1.3 MACHINE DISTRIBUTION

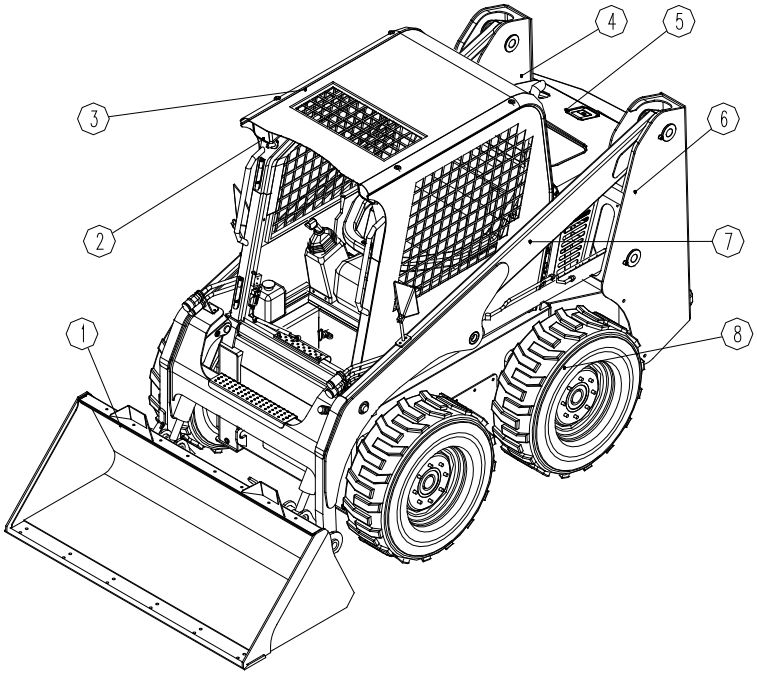

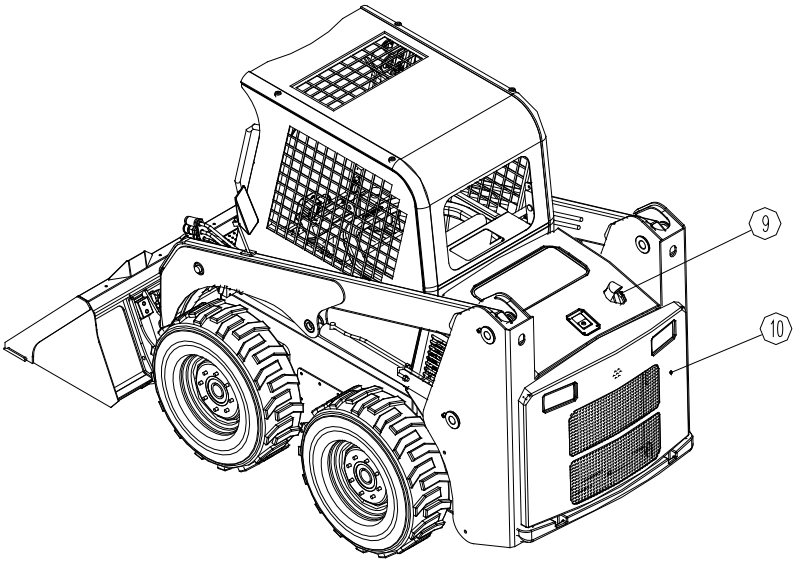

1. Bucket
2. Working lamp
3. Cabin
4. Fuel tank
5. Engine hood
6. Hydraulic oil tank
7. Arm
8. Wheel
9. Exhaust pipe
10. Rear cover

3.2 SPECIFICATION

3.2.1 GENERAL DATA

ITEM		SWL2820	SWL2830	SWL3210	SWL3220	SWL3230	SWL4018
Operating weight	kg	2830	2830	3350	3450	3450	4000
Nominal load	kg	750	750	1000	1100	1100	1500
Tipping Load	kg	1500	1500	2000	2200	2200	3000
Breakout force (lifting cylinder)	Kgf	1900	1900	2430	2430	2430	3000
Breakout force (tilting cylinder)	Kgf	2000	2000	2480	2480	2480	3450
Max traveling speed	Km/h	13	13	12.6	12.6	12.6	10/20 (Double speed)
Bucket capacity	m3	0.4	0.4	0.53	0.53	0.53	0.67

3.2.2 OVERALL DIMENSION

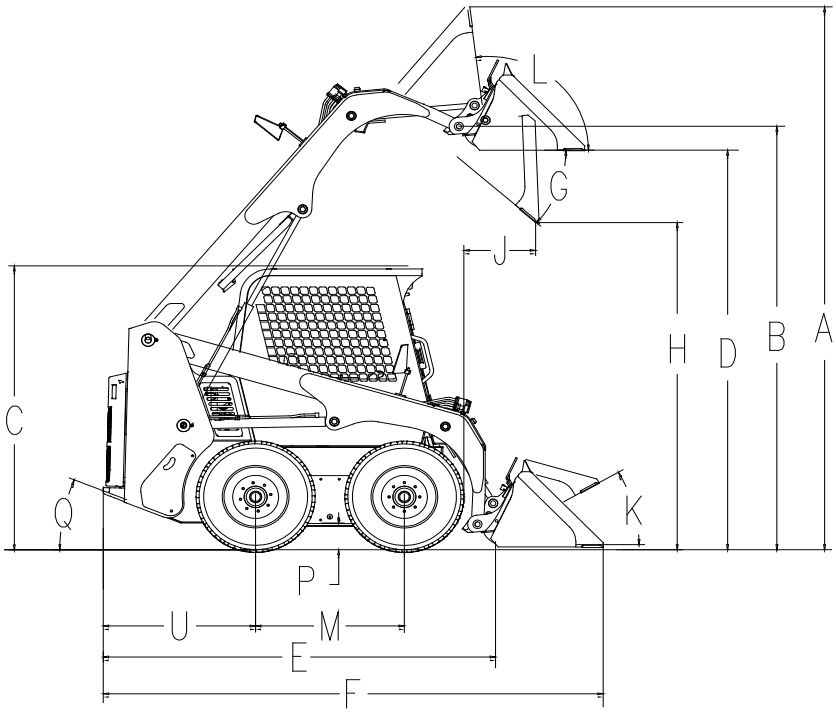

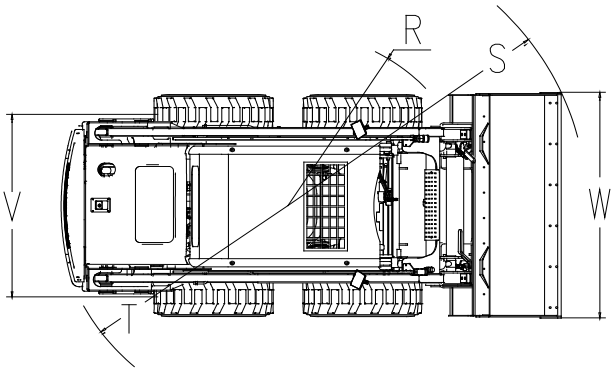

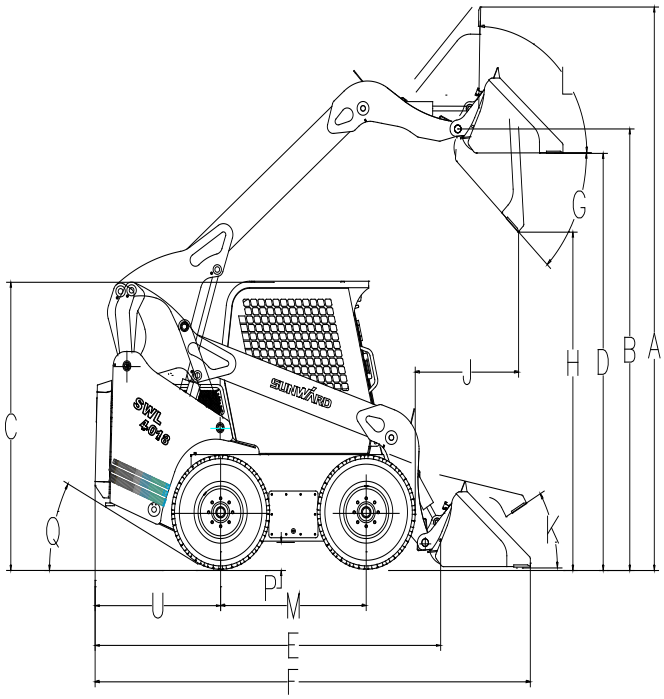

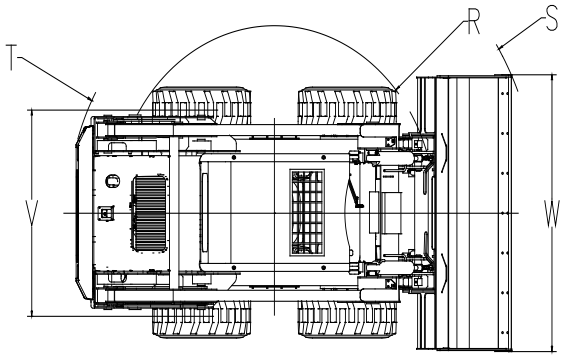

Item	Specification		SWL2820	SWL2830	SWL3210	SWL3220	SWL3230	SWL4018
A	Overall operating height	mm	3850	3850	4020	4020	4020	4108
B	Height to bucket hinge pin	mm	3002	3002	3123	3123	3123	3210
C	Height to top of cab	mm	2014	2014	2068	2068	2068	2098
D	Height to bottom of level bucket	mm	2834	2834	2948	2948	2948	3034
E	Overall length without attachment	mm	2604	2604	2950	2958	2958	2927
F	Overall length with standard bucket	mm	3318	3318	3651	3727	3727	3686
G	Dump angle at maximum height	°	42	42	43	43	43	43
H	Dump height	mm	2320	2320	2395	2395	2395	2453
J	Reach at maximum height	mm	475	475	625	625	625	876
K	Rollback of bucket on ground	°	30	30	30	30	30	30

L	Rollback of bucket at full height	°	97	97	93	93	93	92
M	Wheelbase	mm	987	987	1116	1148	1148	1233
P	Bottom of belly pan	mm	220	220	205	205	205	205
Q	Angle of departure	°	25	25	27	26	26	28
R	Clearance circle front without bucket	mm	1235	1235	1342	1344	1344	1365
S	Clearance circle front	mm	1953	1953	2180	2201	2201	2245
T	Clearance circle rear	mm	1531	1531	1700	1747	1747	1751
U	Rear axle to bumper	mm	1012	1012	1122	1170	1170	1063
V	Tread width, centerline to centerline	mm	1293	1293	1475	1475	1475	1501
W	Width with excavating bucket	mm	1600	1600	1830	1830	1830	2015

3.2.3 ENGINE

ITEM	SWL2820		SWL2830	SWL3210	SWL3220	SWL3230	SWL4018
BRAND	KUBOTA		KUBOTA	KUBOTA	KUBOTA	KUBOTA	KUBOTA
MODEL	V2403-M-DI-E3B	V2403-M-T-E3B	V2403-CR-TE5B	V3300DI	V3307DI-T-E3B	V3307-CR-TE5B	V3800DI-T
POWER（kw）	36	41.7	48.6	54.9	55.4	55.4	74
EFFLUENT STANDARD	EPA Tier4/ EU StageIIIA		EPA Tier4F/EU Stage V	EPA Tier2/EU Stage II	EPA Tier4/ EU Stage IIIA	EPA Tier4F/EU Stage V	EPA Tier3/EU Stage III A
MAX TORQUE（N.m）	163	163.6	198.5	244	265	265	325
ROTATION（rpm）	2600		2700	2600	2600	2600	2600

3.2.4 ELECTRIC SYSTEM

ITEM		SWL 2820	SWL 2830	SWL 3210	SWL3220	SWL3230	SWL4018
Battery	Ah	120	120	120	120	120	120
Alternator	V/A	12/60	12/60	12/45	12/80	12/80	12/80
Starter motor	V/kw	12/2.0	12/2.0	12/3.0	12/3.0	12/3.0	12/3.0
System voltage	V	12	12	12	12	12	12

3.3 MACHINE IDENTIFICATION

There are several plates fixed to the machine for having a control of each machine SUNWARD produce. The plates have been fixed in different places of the machine. The following items describe all the plate.

3.3.1 MACHINE IDENTIFICATION PLATE AND PRODUCT IDENTIFICATION NUMBER (PIN)

The identification plate of machine is placed in front of the chassis.

3.3.2 MACHINE SERIAL NUMBER

The serial number of the machine is placed as showed in the below picture.

3.3.3 ENGINE IDENTIFICATION PLATE

The engine identification plate is placed on the engine as show in the below picture.

3.3.4 SERIAL NUMBER OF CHASSIS

The serial number of the chassis is placed as showed in the below picture.

3.4 SECURITY DEVICES

3.4.1 RESTRAIN BAR

- The restrain bar in made of steel and wrapped with a special rubber. At the end of the restrain bar there is a sensor. The sensor will detect the position of the restrain bar. When the restrain bar is raised the working equipment and travel will be blocked.

3.4.2 BOOM LOCKS

- Loader Locks are used for ensure that the b stopped and with the boom raised. It blocks the hydraulic cylinder so that it is impossible to close them when the cylinders are opened. See the photo below where are they placed.
- Make sure that during the operation of the machine the loader locks are positioned close to the arms. It could result fatal damage to the machine if the safety lock engage the cylinder during the normal working of the machine.

- Two persons must do the engagement, one is in the operation seats to control movement of the machine and another is to engage the locks.
- The loader lock achieves definitive position when the cylinders head surface contact with loader locks.

- **Anytime when you stop the machine with arm raised you need to engage the loader lock.**
- **Make sure you put the safety pin after coupling the loader lock.**
- **Never move the boom while the loader lock is engage.**

3.4.3 RADIATOR OVERTURNING PROTECTION LOCK

- To improve maintenance more convenience.we offer a reversible radiator.If you want to open the radiator to replace the filter element. Lift up the bolt on the side of the box.Let the bolt out of the base.Then the radiator will open.

3.4.4 RETAINER OF AUXILIARY CONTROL PEDAL

- This retainer locks the auxiliary control pedal in the neutral position to avoid any unintended operation.

3.4.5 CABIN OVERTURNING PROTECTION LOCK

- To avoid cabin overturn, one cabin overturning protection lock device is provided. Engage this lock whenever the cabin is raised. Release the lock before lower the cabin.
- Because the cabin is quite heavy and it needs to operate the lock device while raise the cabin, two or more persons are needed to raise cabin.

3.4.6 SEAT

Sunward skid steer loader seat is a specially designed deluxe driver seat for construction machineries. The backrest and cushion are both designed according to body engineering ergonomics, which will offer driver most comfort. The seat is assembled with suspension, which helps to reduce the harmful vibration effectively and ease the fatigue of driver. The seat can be adjusted forward and backward which supply the best comfortable position for driver. When use

the machine first time or driver changed, the driver should adjust the seat according to his own status.

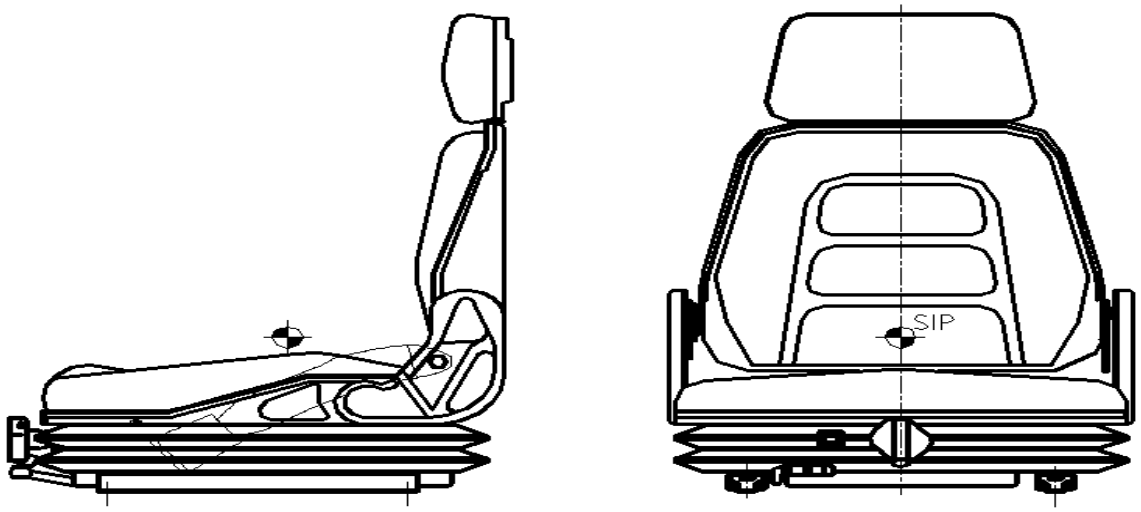

(1) Body weight adjustment

According to operator body weight，rotate adjusting handle in the front middle of seat by hand until feeling comfortable。Rotating handle anti-clockwise，vibration rigidity reduced；Rotating handle clockwise，vibration rigidity increased，suspension vibration device can be adjusted in no level according to body weight of 50-130kg。

(2) Forward and backward adjustment

Raise forward and backward adjusting handle in the right of seat by hand，then push or pull handle along seat front and back direction to make it in ideal position，put down the handle and lock automatically，the seat front and back adjusting distance is 210mm, the adjusting clearance is 10mm。

(3) Armrest angle adjustment

While adjusting the armrest angle, put up the armrest to the proper angle, then rotate the adjustment knob until it is on locking position, by which adjustment is done.

Attention：

- Only adjust the seat when the driver is in safety status.
- For slider and recliner adjustment, please make sure the knob in the proper position; only when the adjustment mechanism parts are separate can you do the adjustment.
- After all the adjustment, please make sure every knob stays in proper position and every part is locked.
- The seat is equipped with a sensor that detect if operator is seated or not. The working equipment and travel system will be blocked while the operator is not seated correctly in operation position.
- The seat size is designed according to standard of ISO 11112, the shock absorber design is fit for EN ISO 7096 EM9 standard.

3.5 INSTRUMENTS

Indicators inside the cabin

1) **Fuel Level Gauge** This indicator shows the fuel level. The capacity of the fuel tank is about 70 liters. The red range indicates that the fuel level is less than 8 liters. When the machine is work, once the indicator reaches the red range, stop the engine and refuel it.

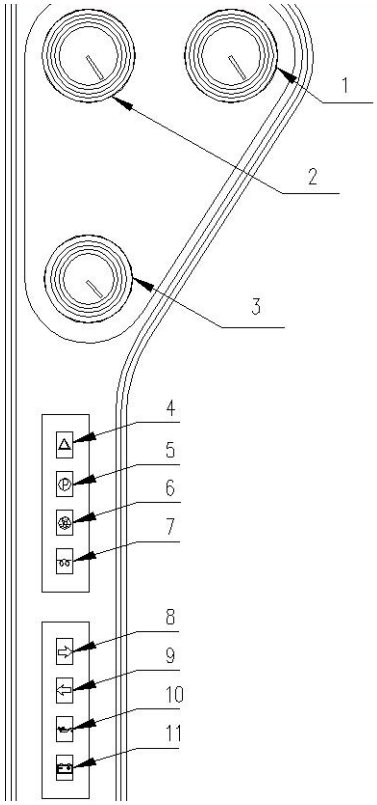

2) **Coolant Temperature Gauge** This indicator shows the temperature of the engine coolant. Normally the engine coolant temperature should be 80-**85**°C while the engine operating. Warm up engine is necessary when start engine. Please keep the engine run with idle after start engine until the coolant temperature reaches the green range then start to work with the machine. Once the temperature reaches the overheating red range, stop the engine immediately.

3) **Hour meter** The hour meter indicates the total number of hours of engine running. The hour meter keeps in function while the engine is running independent on engine rotating speed and working situation.

4) **Working light warning light** This light comes on when the working lights are turned on.

5) **Parking brake warning light** This light comes on when the parking button is being acted. It goes out when the parking button is released.

6) **Air cleaner clogging warning light** This light comes on when the air cleaner is clogging. Stop the engine and check the air cleaner.

7) **Preheating warning light** This light comes on when the ignition key turned to preheat position. It will go out some seconds after the ignition key turned from preheat position.

8) **Direction indicator warning light** This light comes on when the direction switch is operated.

9) **Direction indicator warning light** This light comes on when the direction switch is operated.

10) **Engine oil pressure warning light** This light comes on while starting the engine. It goes out soon after the engine runs.

    If this light remains on or comes on while the engine is running, stop the engine immediately and try to find out the cause.

11) **Battery warning light** In normal conditions the warning light comes on when the starter circuit is energized and goes out when the engine goes to normal speed. If the light remains on when the engine running on normal speed, this means the alternator does not work and the battery is not charged correctly.

    When turn the ignition Key to ON position，if the light does go out， it means that the battery does not work well.

12) **Water temperature combined instrument（4F）** The instrument uses CAN bus communication to obtain the display of engine water temperature, speed, fault flashover code and so on. The dial calibration is linearized by using digital processing method with microcontroller as the core and driving pointer of imported stepper motor. The pointer deflection angle is 240 degrees, and the control error is < 0.5 degrees. The dot matrix LCD display can display the working time, the rotational speed can be displayed when the rotational speed is greater than 600 rpm/min, and the fault code will be preferentially displayed when the engine fault flashing code alarm is received.

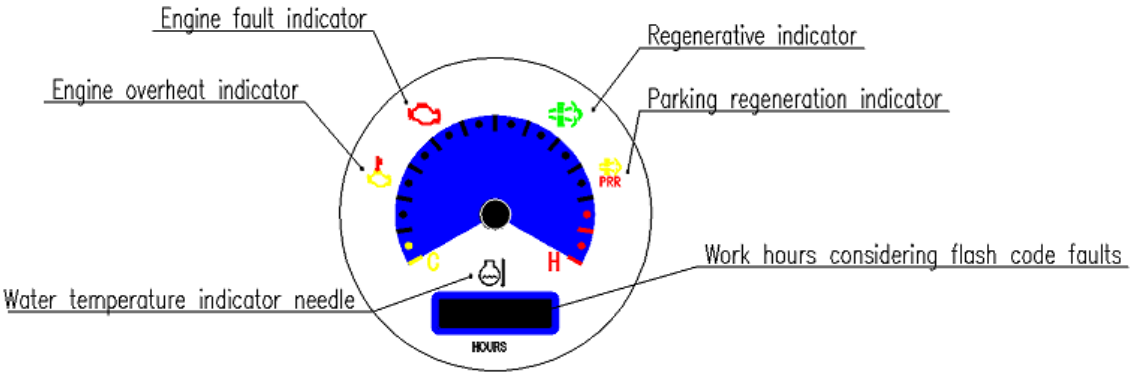

13） Control of diesel particulate filter (DPF) system

The engine ECU determines the PM accumulation status from information from each sensor and sets regeneration or

cleaning level and timing.

1. Automatic active regeneration

When the PM level reaches 1, the engine ECU performs regeneration control to burn the PM that has been accumulated.

If the DOC temperature (value of exhaust gas temperature sensor T0) is 250 ℃ (482 ℉) or higher, the engine ECU gives instruction to the injector to perform post injection.

Unburned fuel is combusted in the DOC raising the exhaust gas temperature to 550 ℃ (1022 ℉) or higher and combusting the PM in the DPF.

If the DOC temperature is less than 250 ℃ (482 ℉), the fuel will not burn even if a post injection is performed so post injection is not performed.

Therefore, regeneration is also not performed.

If the DOC temperature is 550 ℃ (1022 ℉) or higher, the PM combusts on its own so post injection is not performed (Passive regeneration state).

In addition, if auto regeneration is not completed within specified time while in PM level 2 state, the engine ECU requests parked regeneration.

2. Parked active regeneration

When the PM level reaches 3, the engine ECU sends a warning to the machine on which it is equipped to perform parked regeneration and commands output restriction.

During parked regeneration, pre-programmed operation processes are performed automatically.

As a preparation step for regeneration, first the intake throttle valve is operated reducing the amount of intake air raising the exhaust gas temperature.

Further, engine speed is raised and adjusted so that the DOC temperature rises to 250 ℃ (482 ℉) or higher.

After the DOC reaches 250 ℃ (482 ℉) or higher, control is performed the same as for auto regeneration.

When regeneration is finished, the operation state is returned what it was prior to auto regeneration (idle speed).

3. Forced regeneration

When the PM level reaches 4, forced regeneration has to be performed using a failure diagnostics tool

(Diagmaster).

Regeneration control itself is the same as that for parked regeneration.

PM warning level		Regeneration method			Regeneration status	Control
		Automatic active regeneration	Parked active re-generation	Regeneration with service tools		
0	Not necessary	x	x	o	Not necessary regeneration.	–
1	Automatic active regeneration	o	x	o	When the warning level reaches 1, regeneration is started automatically.	1. If the DOC temperature (value of exhaust sensor T0) is 250 ℃ (482 ℉) or higher, the engine ECU gives instruction to the injector to perform post injection. 2. Unburned fuel is combusted in the DOC raising the exhaust gas temperature to 550 ℃ (1022 ℉) or higher and combusting the PM in the DPF. 3. If the DOC temperature is less than 250 ℃ (482 ℉), the fuel will not burn even if a post injection is performed so post injection is not performed. Therefore, regeneration is also not performed.

PM warning level		Regeneration method			Regeneration status	Control
		Automatic active regeneration	Parked active regeneration	Regeneration with service tools		
2-1	Automatic active regeneration	○	×	○	When the warning level reaches 2, regeneration is started automatically.	4. If the DOC temperature is 550 ℃ (1022 ℉) or higher, the PM combusts on its own so post injection is not performed (Passive regeneration state).
2-2	Require parked active regeneration	×	○	○	If PM warning level does not fall to 0 within 30 minutes after started automatic active regeneration, parked active regeneration is required.	1. Stop the machine at safty position. 2. The intake throttle valve is operated reducing the amount of intake air raising the exhaust temperature. 3. Engine speed is raised and adjusted so that the DOC temperature rises to 250 ℃ (482 ℉) or higher. 4. After the DOC reaches 250 ℃ (482 ℉) or higher, control is performed the same as for auto regeneration. 5. When regeneration is finished, the operation state is returned what it was prior to auto regeneration (idle speed).
3	Parked active regeneration (with output limitation)	×	○	○	Automatic active regeneration stops. Require parked active regeneration with machine stop.	
4	Regeneration with Diagmaster (with output limitation)	×	×	○	Parked active regeneration becomes impossible. Need to use Diagmaster for regeneration.	Regenerate using diagnostic tool (Diagmaster).
5	Cleaning DPF (with output limitation)	×	×	×	Regeneration with Diagmaster becomes impossible. Need to change or clean DPF.	—

3.6 JOYSTICKS

1) **Left joystick** The left joystick is for controlling the movements of the machine. It is designed according to ISO 10968:2004. Its operating positions and relevant functions

2) are showed in the following diagram.

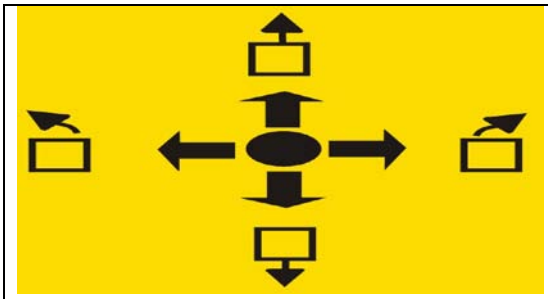

Direction	Function
Front	**Forward**
Back	**Backward**
Left	**Turn left**
Right	**Turn right**
Front & left	**Forward left steering**
Front & right	**Forward right steering**

Back & left	**Reverse left steering**
Back & right	**Reverse right steering**

3) **Right joystick** The right joystick is for controlling the movements of the boom and working equipments. Its operating positions and relevant functions are showed in the following diagram.

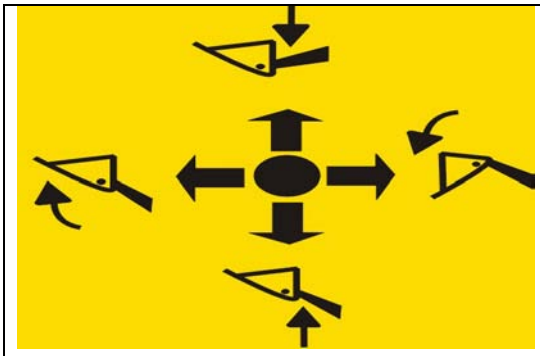

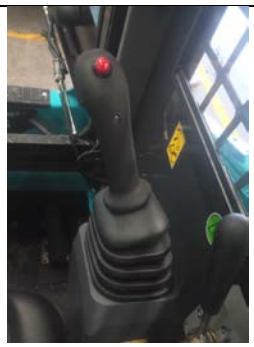

Direction	Function
Front	**Boom lowering**
Back	**Boom lifting**
Left	**Bucket folding**
Right	**Bucket dumping**
Front & left	**Boom lowering- Bucket folding**
Front & right	**Boom lowering - Bucket dumping**
Back & left	**Boom lifting- Bucket folding**
Back & right	**Boom lifting- Bucket dumping**

4) **Restrain bar** The restrain bar is extremely important for the safety of operation. It will be a protection for the operator for avoid jump forward in case of sudden stop while traveling. It is also the safety device to lock the joysticks control. When it is lifted to vertical position, the joysticks will be out of order. To release the lock, you have to lower the restrain bar to horizontal position. The locking function is obtained by a sensor located closed to the support of restrain bar.

Foot accelerator The foot accelerator is on the right side of the operator. Operator can operate the foot accelerator via his right foot easily. Footaccelerator is for adjusting engine speed and power together with hand accelerator. The foot accelerator lever will return to its limit position after the operation finish.

5) **Hand accelerator** Be same as foot accelerator, the hand accelerator is on the right side of the operator. Operator can operate the hand accelerator via his right hand easily. Operator can adjust engine speed and power via hand accelerator and fit it to constant level.

6) **Auxiliary device control pedal** The auxiliary device control pedal is positioned in front of operator. It is to open and close the oil flow to the auxiliary device. One safety guard is over the auxiliary device control pedal. Lift the safety guard before use it.

（One locking bale is positioned on the right side of safety guard, close the safety guard maintain the pedal position when control peda in the Left positions.）

The auxiliary device control pedal has three operation positions:

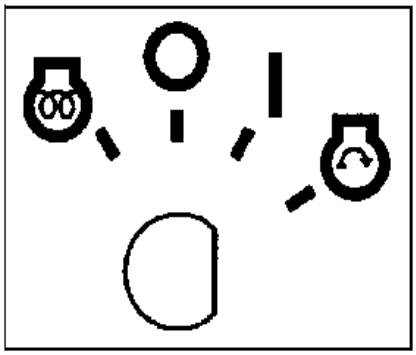

- Middle ---Neutral.
- Left ---Open for normal hydraulic circuit and control bi-directional

flow together with right.

- Right ---Together with left for bi-directional flow control.

3.7 SWITCHES AND BUTTONS

Switches inside the cabin

1) **Ignition key and switch** There is one ignition switch located on the right joystick support. This rotary switch has four fixed positions. The marks and functions for the four positions are indicated in the following table.

Positions	Marks	Functions
Left		PREHEAT
Neutral		OFF
First right		ON
Second right		START

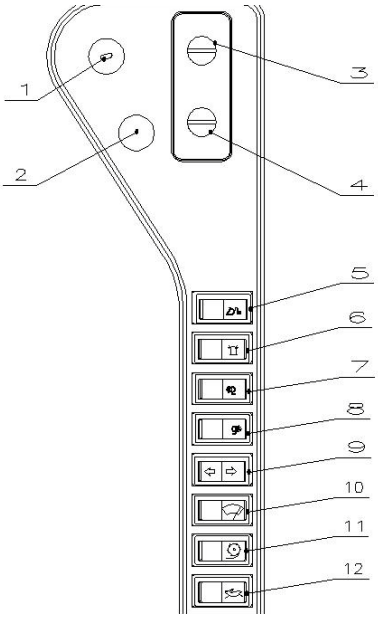

2) **Parking brake button** When it pressed, the parking brake applies. The hydraulic flow to all the working equipments and traveling system is cut off. In this case the traveling system and working equipments are blocked and impossible to operate. To release the parking brake, press the parking brake button again. The LED will go out after press again.

NOTE:

- The parking brake is engaged automatically when engine stopped. This is due to the lack of pressure of hydraulic circuit.

- Only when the engine is running and all of safety device are in function, the parking brake can be released.

3) **Temperature adjustment**：Screw knob 3 to adjust temperature.

4) **Wind speed adjustment** Screw knob 4 to adjust wind speed.

5) **Working Device Switch** For security reasons there is a switch for blocking the entire working cylinders that control the boom and the bucket. When it is pushed to OFF position, the boom and bucket can't be operated. Please push it to ON position when you need to operate the boom or bucket. It is suitable for traveling a long distance. When it is to travel a long distance, engage the switch.

6) **Warning light switch** This switch turns the warning light on and off. When press the switch, the switch light flashes and the red light turns on; when press the switch again, the red light turns off and the warning light stops flashing.

7) **Working lights switch** This switch is to activate the working lights.

8) **Rear light switch (optional)** This switch is to activate the rear lights.

9) **Direction indicate button** The direction indicate buttons are located on the both joysticks. Press left button to engage the ldeft turning inicating light. Press right button to engage the right turning indicating light.

10) **Wiper switch** This switch turns cabin wiper on and off. When press this switch, wiper begin to work, green light comes on; press this switch again, green light goes out, wiper stop work.

11) **High flow switch** This switch turns the high flow on and off. When turn on this switch high flow begins to work **,**When turn off this switch high flow stop work

12) **Speed traveling switch**

Press this switch,the machine is on high speed condition; press this switch again, green light goes out, the machine is on low speed condition.

13) **Cleaner switch** This switch turns washing water on and off. When press this switch, washing water begins to work, the light comes on; press this switch again, the light goes out, washing water is turned off.

14) **Horn button** The button is placed on the joystick. Pressing it to activate the horn for warn the persons around the machine.

15) **Accumulator switch** It is to cut off the battery supply circle. Switch off it when it is necessary.

16) **Warm hydrovalve** Please close the hot water valve before using the refrigeration system in summer or the aeration system in spring or autumn. In winter, please open the hot water valve before using the heating system.

3.8 CABIN

A FOPS and ROPS homologated cabin is equipped on this machine. The cabin is fit for EN ISO 13510 and EN 13627 level I safe request. This cabin will supply a comfortable working environment to the operator and guarantee operator's safety.

Cabin can be raised by rotate with the base of front joint with chassis .

The rear window is also used as an emergency exit in case of accident. The rear window is removable. Remove it when it is necessary. For the operation, see the description in "3.9".

Remark: The damaged cab could not be repaired and used again.

3.9 REAR WINDOW

Rear window is the emergency exit for operator. In case of accident, the normal exit is not available any more. Operator should open the rear window as the follow procedure and treat it as an emergency exit.

1. Use a safety hammer or some sharp tools to knock on the rear window.
2. Take out the rear glass and get through the window.

3.10 SEAT BELT

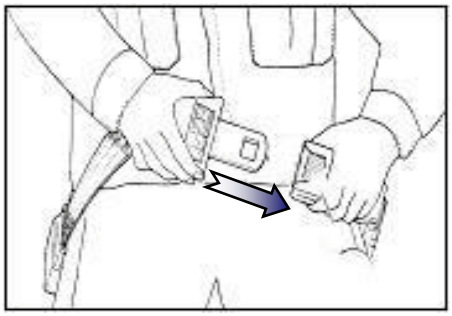

- Change the safety belt when it is damaged or wear out. The safety bar could not work properly if it is damaged.
- Change the safety belt when you have suffered and accident.
- Check every certain time (See item 5.9 Maintenance Plan) the screws that support the safety belt.

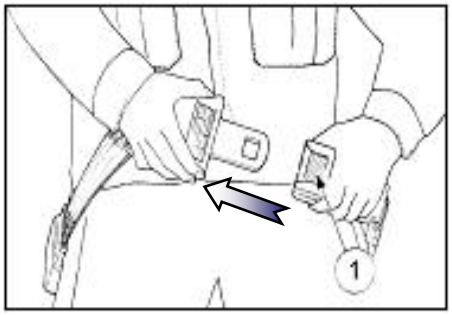

3.10.1 FASTEN THE SEAT BELT

To fasten the seat belt, the operator needs to be seated and then follow these steps:

1. Take first the male clasp and introduce it into the female clasp until the blocking position.
2. Once it is in a blocking position wait until the belt rolls up the belt to a tight position.

3.10.2 UNDO THE SEAT BELT

To undo the seat belt just press the button (1) shown in the picture and wait until the belt rolls up.

For checking if the seat belt works correctly, just pull strongly form the belt once the belt is fasten. The belt should block you pulls. In case the belt does not block your pulls, repair or remove it immediately.

3.11 AUTO-LEVELLING SYSTEM

The auto levelling system consists in maintain the bucket parallel to the floor when the boom is moving up. It helps the operator to maintain the bucket so that the load not falls down when the boom goes up.

The auto leveling system is always operational.

3.12 FLOATATION SYSTEM

A special valve activates the floatation system .When the right joystick was put front and the joystick and the valve absorbed together, the boom floating function was started. It is very useful with a bucket for levelling.

3.13 FUSES

The electric circuit is equipped with fuses that maintain the amperage of the electric circuit under a maximum allowed. Most of fuses are grouped in one box located on the right side of the cabin.

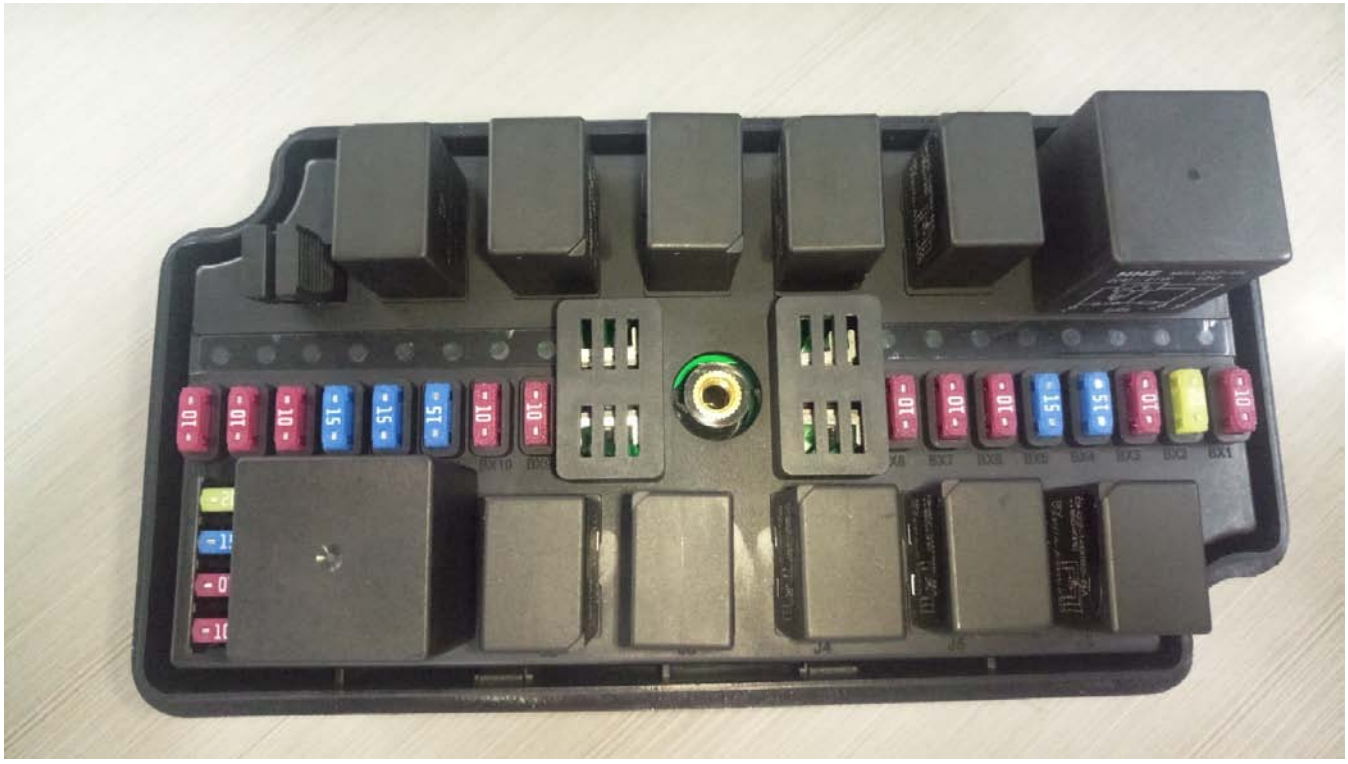

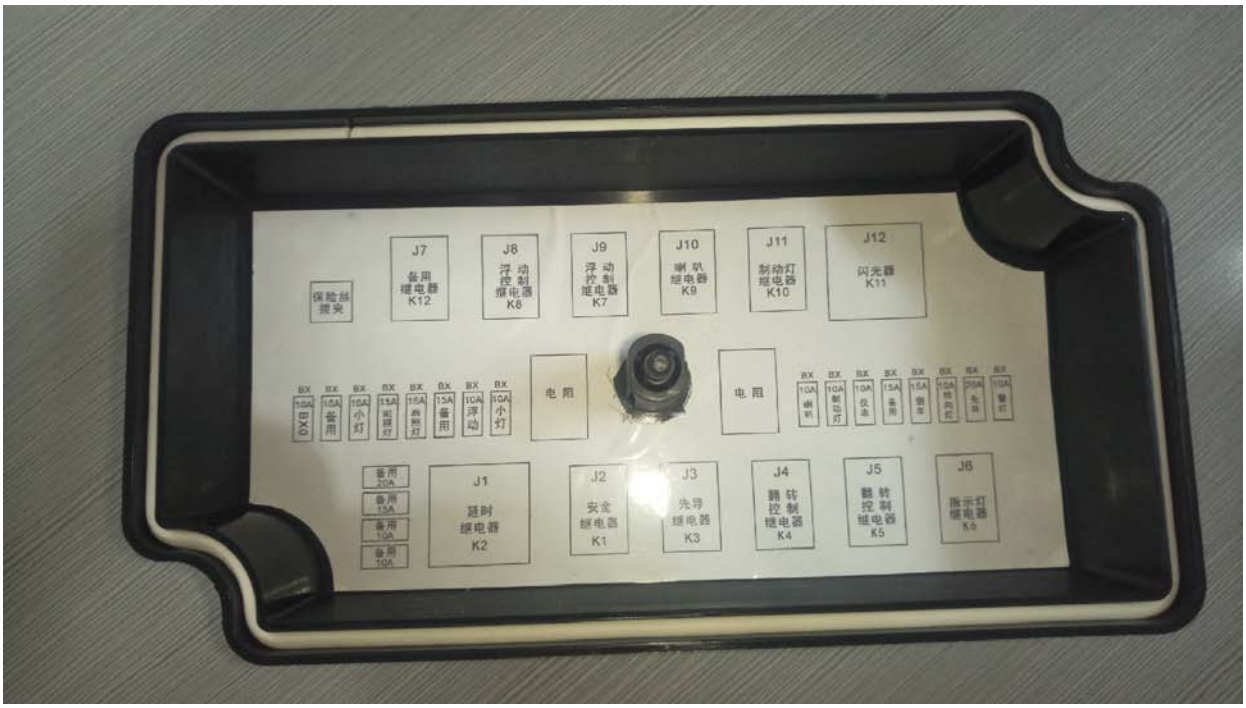

The following table shows the fuses of the electric system. (The position no. direction is from left to right)

POSITION	COLOUR	CAPACITY (A)	INVOLVED CIRCUIT
1	Red	10	BXO
2	Red	10	Standby
3	Red	10	Small light
4	Blue	15	Front working light
5	Blue	15	Behind working light
6	Blue	15	Standby
7	Red	10	Floating
8	Red	10	Small light
9	Red	10	Horn
10	Red	10	Braking light
11	Red	10	Instruments
12	Blue	15	Standby
13	Blue	15	Reversing light
14	Red	10	Turn light
15	Yellow	20	Pilot valve
16	Red	10	Warning light
17	Yellow	20	Standby
18	Blue	15	Standby
19	Red	10	Standby
20	Red	10	Standby

3.14 RELAYS

Most of the relays are positioned inside the fuse box. The following table shows the relays and their Position.

No.	Descriptions	Position
J1	Delay K2	
J2	Safety K1	
J3	Pilot K3	
J4	Parking valve K4	
J5	Parking valve K5	
J6	Parking indicator light K6	
J7	Standby K12	
J8	Floating K8	
J9	Floating K7	
J10	Horn K9	
J11	Parking light K10	
J12	Steering indicator light K11	

Description of the locations of the relay: They are also grouped in one box located on the right side of the cabin. (see the photo above, The position no. direction is from left to right)

3.15 DOCUMENTS CASE

There is a document case located in the back of seat. It is for keeping operation and maintenance manual and spare parts book. These two documents are part of the machine and must be always keep with the machine. This case can provide a clean place for the important documents. It is convenient for operators to get and deposit the documents, so that they can consult these documents at any moment. Please keep the operation and maintenance manual and spare parts book always in this case besides they are in use. It will reduce the possibility of losing documents.

3.16 ENGINE HOOD

- **Never open engine hoods while the engine is running.**
- **Never start the engine with engine hood open, only when the maintenance procedure makes it necessary.**
- **Do not maintain the engine hood open without the safety bar engage in the cylinder.**

To open the engine hood, press the locking device by lift the latch and raise the engine hood. A safety bar is installed in the cylinder. Lock this safety bar every time you raise the engine hood.

To close the engine hood, unlock the engine safety bar and press the cover down until the lock engaged.

3.17 REAR COVER

Important

- **The rear cover can only be opened after open the engine hood.**

To open the rear cover you must open first the engine hood. There is a lever that allows you to open the rear cover (See the picture below).
Lift up the lever and at the same time turns the door. Once you have disengaged the lock turn the door to the maximum and fix this position with the retainer. For engage the retainer you just need to turn the restrainer and rest it to the rear cover once you have turned the door to the maximum. To close the rear cover disengaged the restrainer, turn the door and press it against the chassis.

3.18 BATTERY

Complete with battery manual.

4 OPERATION OF THE MACHINE

4.1 RUNNING-IN

A new machine must be used carefully during the first 100 working hours. It is due to ensure the proper running-in of the components. Proper running-in is important to prolong the machine life Working with excessive load during the first operation period can cause damages to the components.

During the running-in period (first 100 working hours), please carry out the following indications:

- Never use machine for excessive load.
- After starting the engine, let it run with idle for 5 minutes.
- Try not operating the machine at high speed.
- Avoid abrupt starts and acceleration.
- Carry out the maintenance.

4.2 CHECKS BEFORE OPERATION

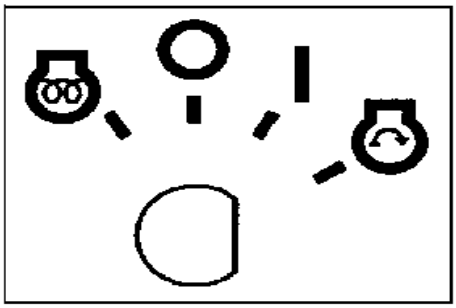

Before any operation, carry out the checking steps. If necessary, do the repair or maintenance before work.

Before starting engine, seat properly in the operator’s seat and keep the seat belt fasten. Check the follows:

- Application of restraint bar;
- Application of the parking brake;

- Hand accelerator is on idle position;
- The joysticks and auxiliary controls are in neutral position;

Then turn the ignition key to the “ON” position, check the following functions:

- The acoustic alarm;
- The fuel level indicator;
- Engine oil pressure;
- Generator warning light;
- Preheating warning light;
- Press the horn button on the left joystick to check its function.

4.3 STARTING THE ENGINE

WARNING

- **Only start the engine when you are seated properly in the operator’s seat.**
- **Before starting the engine, make sure there are no persons or obstacles in the surrounding area, then sound the horn and start the engine.**
- **Never use starting aid fluids because they may cause explosions.**

NOTICE

- **Do not keep the starter continuously rotating for more than 15 seconds.**
- **It the engine does not start, wait for at least 2 minutes before trying again.**
- **Never turn the key to positions of start and preheat when the engine is running.**

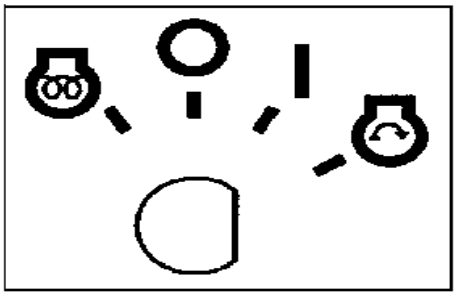

4.3.1 NORMAL STARTING

Follow the steps below when start a warm engine or in temperate environment.

1) Turn the ignition key to the START position and keep it. The engine will start.
2) Once the engine starts, release the ignition key. The key will return to the ON position automatically.

4.3.2 STARTING THE ENGINE IN COLD WEATHER

When start an engine in cold weather, do as follows:

1) Turn the ignition key to the PREHEAT position and hold for no more than 15 minutes. The preheating warning should be on.
2) When the preheating warm goes off. Turn the ignition key to the START position and keep it. The engine will start.

3) Once the engine starts, release the ignition key. The key will return to the ON position automatically.

TEMPERATURE	APPROXIMATE PREHEAT TIME
≤ -20ºC	5 min.
-20/-10ºC	2 min.
-10/ +5ºC	1 min.
≥ +5ºC	0,5 min.

4.4 WARM UP THE ENGINE AND THE HYDRAULIC SYSTEM

NOTICE

- **If the working equipment or traveling system is operated without warming up, the response will be slow. Always carry out the warming up, particularly in the cold areas, carry out the warming up fully. This will help to extend the machine life.**
- **When the hydraulic oil is at low temperature, do not carry out operations or move machine suddenly.**

After starting the engine, do not immediately start operation. First carry out the following operations and checks:

- Idle the engine for a approximate 5 minutes;
- After the coolant temperature reaches 60°C, lower the restrain bar and slowly operate all working equipment cylinders for a while.
- During warming up process, check if there is any abnormal noises or vibration s. If there is, settle the problem before working.

4.5 STOPPING THE ENGINE

NOTICE

- **If the engine is stopped abruptly, the service life may be reduced considerably. Do not stop the engine abruptly except in an emergency.**

Stop the engine as follows:

1) Run the engine at low idling for approximate 5 minutes so that the engine cools down gradually.
2) Turn the ignition key to OFF position to stop the engine.
3) Remove the ignition key from the switch.

4.6 MACHINE MOVEMENT

WARNING

- **Before you begin to move the machine make sure you understand all the control functions and also all the safety regulation. A wrong use of the machine could result fatal for the operator or the machine.**
- **When moving off, check the route area is safe and sound the horn before moving. If necessary, clear all personnel and obstacles from the machine and the path.**
- **Never carry out abrupt movements, since it could result dangerous for the security of the operator and the machine.**
- **Be extremely careful with curves. Slow down while running in a curve. Do not change the direction when the machine is at high speed.**
- **Avoid performing the working equipments when the machine is running at high speed.**
- **Position the rear view mirrors suitable for you before moving machine. Be extremely careful while moving machine reversely.**

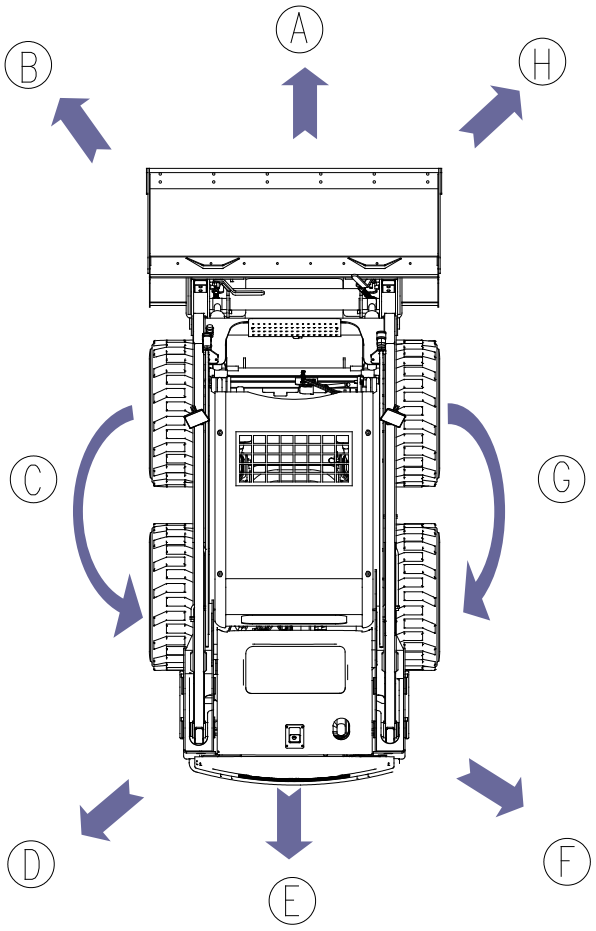

Movement	MARK	LEFT JOYSTICK POSITION
Forward	A	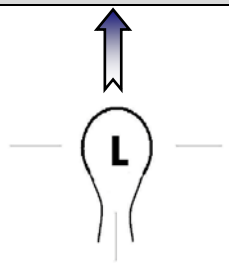
Backward	E	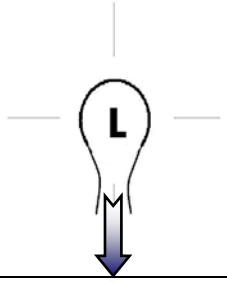
Forward left 45°	B	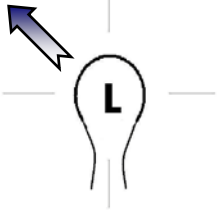
Forward right 45°	H	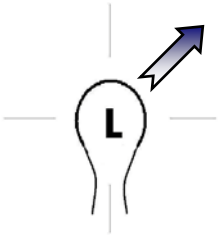
Backwards left 45°	D	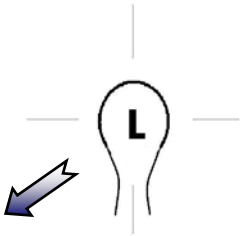
Backward right 45°	F	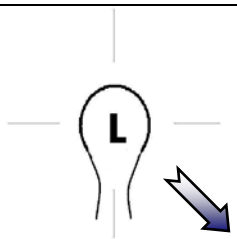
COUNTER ROTATING LEFT	C	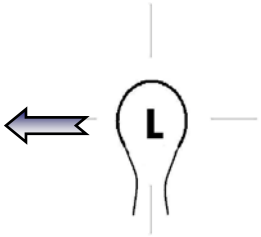

COUNTER ROTATING RIGHT	**G**	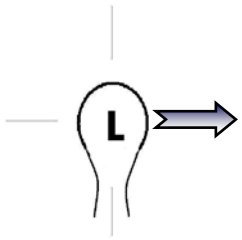

When you have to move on slopes, please operate the machine extremely according to the safety regulations.

4.7 OPERATION OF WORKING EQUIPMENTS

For the auxiliary equipments operation, see the related instructions of the auxiliary equipments.

When the machine is equipment with the standard working equipments bucket, follow the operation as follow.

OPERATION	MARK	RIGHT JOYSTICK POSITION
BOOM RAISE	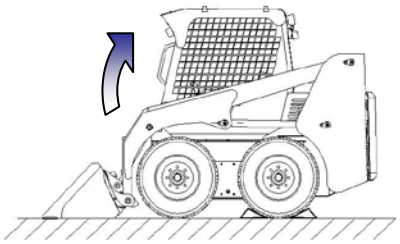	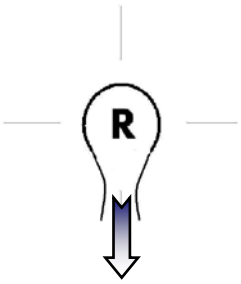
BOOM LOWER	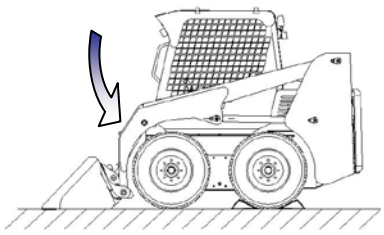	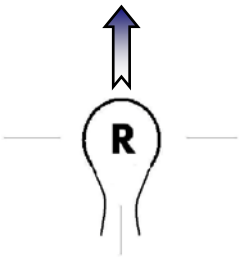
BUCKET FOLD	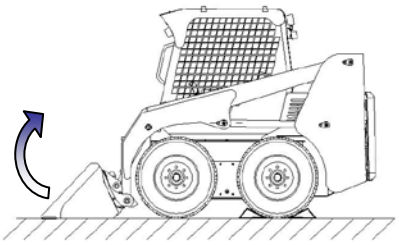	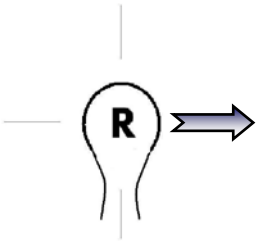

BUCKET OPEN	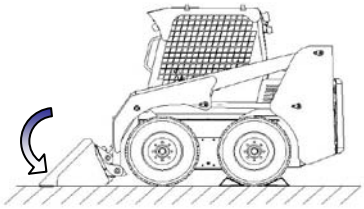	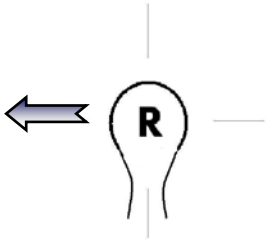

4.8 LOADING

4.8.1 LOADING ON LEVEL FLOOR

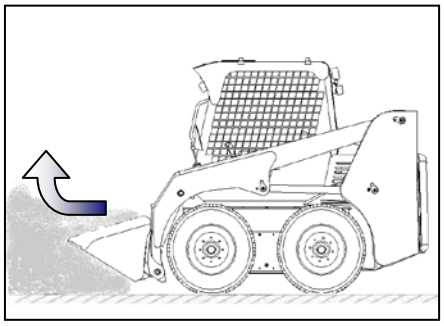

1) Start moving with the arm completely lowered and directs the bucket forward the base of the material what you want to load.
2) Move forward to the material, while the bucket is full, gradually raise the boom and fold the bucket until the end of stroke at the same time. Slow down the moving speed till stop during loading.

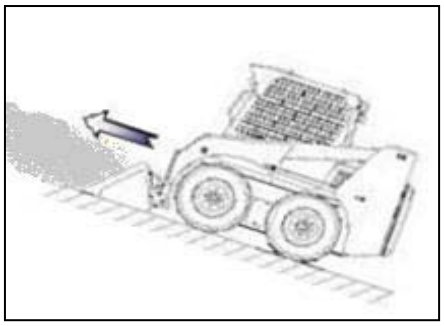

3) Move reverse and dump the material to where you desire.

4.8.2 LOADING ON SLOPES

WARNING

- **While doing the loading on slopes, the regulations of MOVING ON SLOPES must be followed with.**
- **Only do the loading on slopes when it is absolutely necessary.**
- **Always go up with the bucket directly forward and go down in reverse with the bucket forward and lowered.**

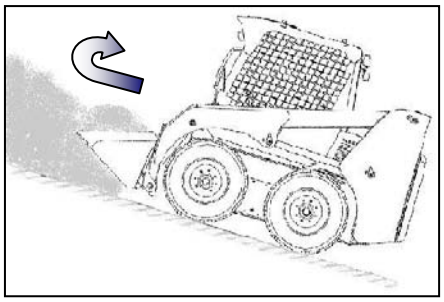

- **Never go down from higher place to load material downwards. It extremely easy to cause machine overturn.**
- **Always keep the bucket lowered as much as possible.**

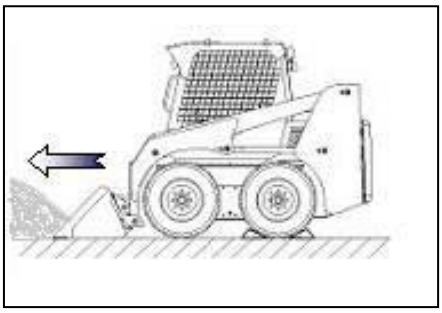

1) Start moving with the arm completely lowered and directs the bucket forward the base of the material what you want to load.
2) Move forward to the material, while the bucket is full, gradually raise the boom and fold the bucket until the end of stroke at the same time. Slow down the moving speed till stop during loading.

3) Lower the bucket and move reverse and dump the material to where you desire.

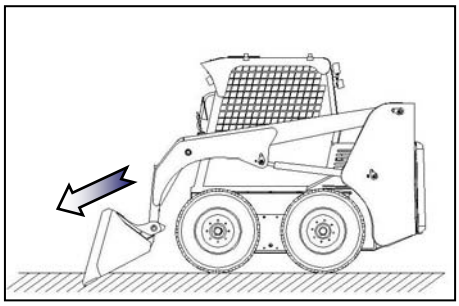

4.9 DIGGING

Wrong digging operation will damage the machine. Carry out the follows steps and correct digging method while digging.

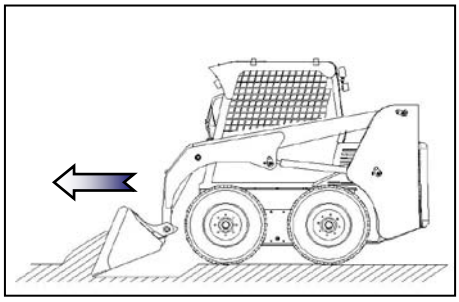

1) At the beginning of work, always adjust the bucket angle to the correct digging direction.
2) Once the bucket front edge reaches the depth, move forward and start filling.
3) To increase the efficiency, you have to adjust the position of bucket and boom combined while filling.
4) The digging depth must be suitable for the machine. Different type ground will affect the available digging depth. An excessive digging depth may cause locking of the movement even stopping of the engine.

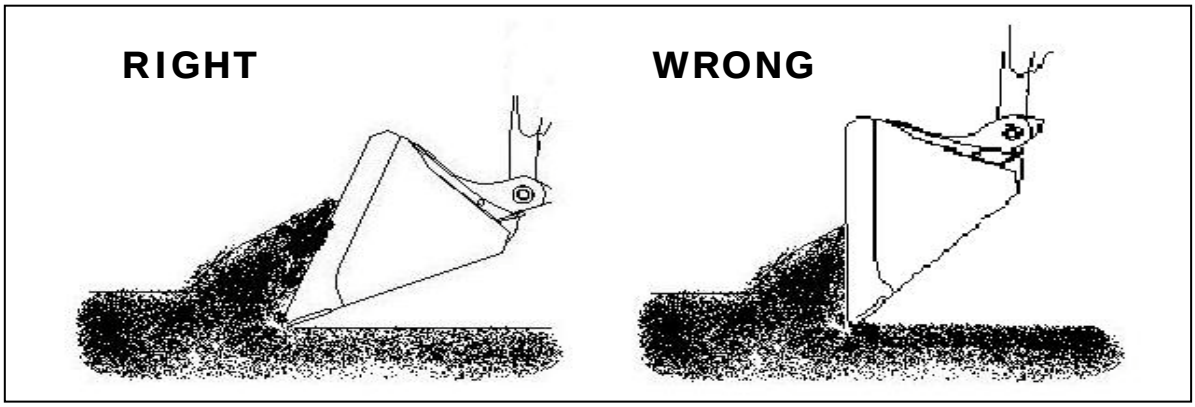

4.10 LEVELLING UP

After loading or digging, sometimes it is needed to level up the ground. The machine can use the bucket to level up the ground. Carry out the following steps:

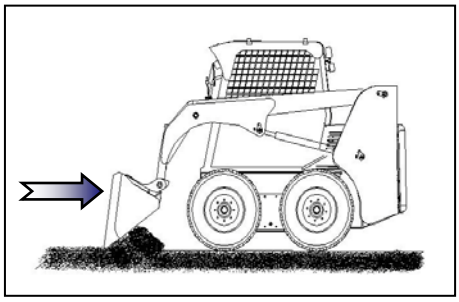

1) Incline the bucket forward;
2) Lower the boom till the front wheel raised slightly;
3) Move the machine reverse and distribute the material uniformly.

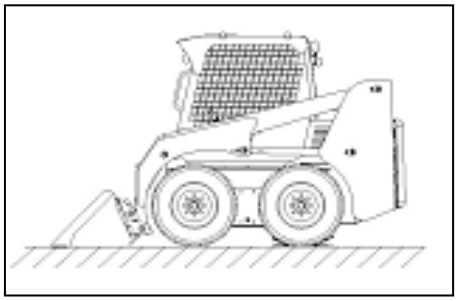

4.11PARKING THE MACHINE

When you are going to park the machine, do the following steps:

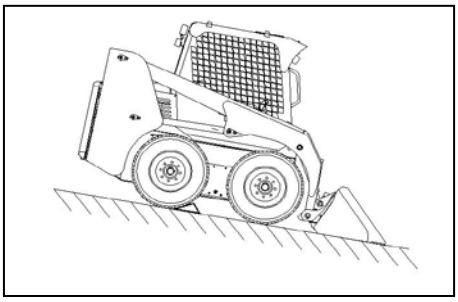

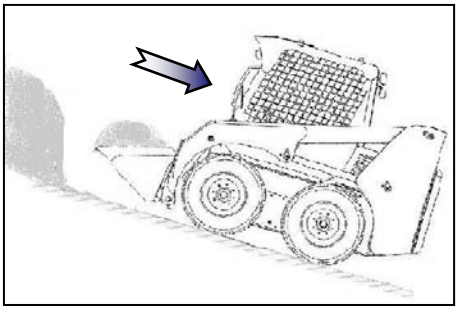

1) Try to move and park the machine on a firm and level surface to ensure the safety and convenience to do maintenance.
2) Lower the working equipment to the ground.
3) Raise the restrain bar to lock the working equipment and traveling system.
4) Engage the retainer for auxiliary equipment control pedal.
5) Apply the parking brake.
6) Stop the engine.
7) Remove the ignition key from the switch and leave the cabin.

DANGER

When it is ineluctably to park the machine on slopes, always park the machine with the bucket directed downwards. Locate the edges under the wheels.

4.12 ACCELERATION

There are two accelerator levers in the cabin: hand accelerator and foot pedal accelerator.

The hand accelerator lever can be pulled forward and backward and fixed at any position of its stroke. The rear end of hand accelerator stroke is the minimum limit and the front end is the maximum limit. The revolution range goes from approximate: SWL2820: 800 rpm to 2800 rpm. Fix the hand accelerator lever to the proper position according to the working condition.

The foot pedal accelerator is normally used to accelerate the engine temporarily. Force the pedal with your foot to accelerate the engine. It can control the engine revolution speed from the hand accelerator fixing speed to maximum speed.

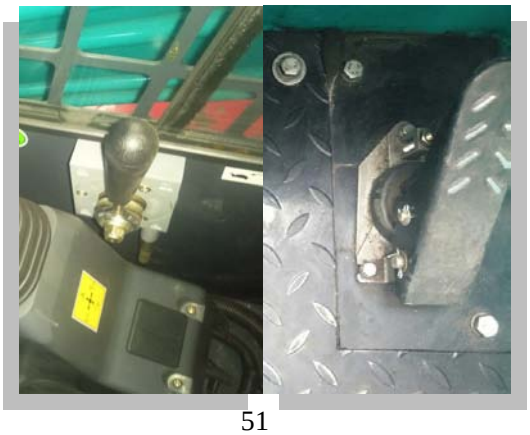

- **Before start the engine put the manual accelerator to the idle position.**
- **For having a better efficiency, the speed must be proportional to the required effort.**
- **There are two stoppers on the engine accelerator device to fix the limits of minimal and maximal engine speed. The machine manufacturer or the engine supplier fixed the stopper position after test Do modify the stopper position without authorization. Unauthorized modification can cause engine over speed. It can cause serious accident even death.**

4.13 TRANSPORTING THE MACHINE ON OTHER VEHICLES

4.13.1 LOADING THE MACHINE

Always follow with the safety regulations when loading the machine on other vehicles. Any neglect on the regulations may cause serious accidents.

Follow the following steps to load the machine to the transporting vehicles:

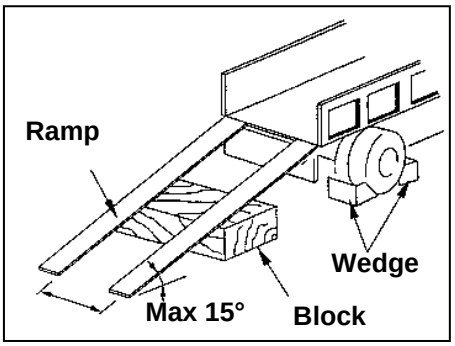

1) Park the transporting vehicle on a firm and level surface and apply the braking system. Position wedges under the wheel to secure the vehicle.
2) Lock the ramps on the vehicle. The maximum ramp inclination is 15°. The ramps must be parallel.
3) Move the machine on the ramps. Keep the empty bucket backwards and the moving direction must be parallel with the ramps.
4) Move slowly the machine on the vehicle. Do not change the moving direction on the ramps.

4.13.2 SECURING THE MACHINE

After move the machine on the transporting vehicle, to ensure the safety during transportation, the steps following must be carried out to secure the machine.

1) Lower the bucket to the ground and let its back on the ground, see the figure below.
2) Raise the safety bar, stop the engine and remove the key from the ignition switch.
3) Put wedges under the wheels.
4) Use chain or cable to fix through the anchorage point.

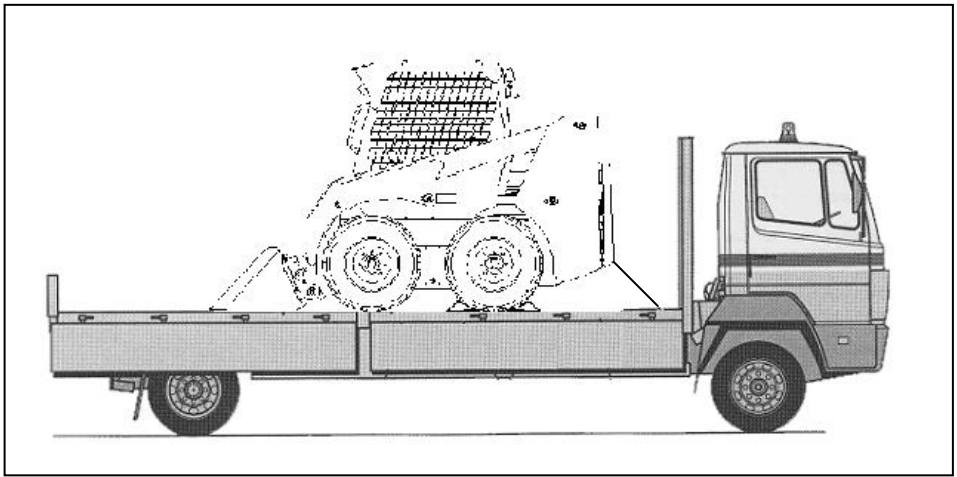

4.13.3 UNLOADING THE MACHINE

Always follow with the safety regulations when unloading the machine from the transporting vehicles. Any neglect on the regulations may cause serious accidents.

Follow the following steps to unload the machine from the transporting vehicles:

1) Park the transporting vehicle on a firm and level surface and apply the braking system. Position wedges under the wheel to secure the vehicle.
2) Lock the ramps on the vehicle. The maximum ramp inclination is 15°. The ramps must be parallel.
3) Move the machine on the ramps. Keep the empty bucket forwards and the moving direction must be parallel with the ramps.
4) Move slowly the machine from the vehicle. Do not change the moving direction on the ramps.

4.14 LIFTING THE MACHINE

DANGER

- **Before lifting the machine, make sure nobody can approach the lifting area. While lifting the machine, make sure nobody is under the machine and vicinal area.**
- **The operator must leave the machine before lifting.**
- **Only use homologated eyebolts and sufficient cables.**
- **Make sure the lifting equipment have enough capacity to lift the machine**

NOTICE

- Eyebolts are not supplied by Sunward normally. The owner of the machine is responsible for install the eyebolts on the cabin roof.
- The eyebolts must be installed properly on the four installing block on the roof of cabin.

1) Lower the bucket to the ground and fold it completely.
2) Raise the restrain bar and stop the engine.
3) Fix the eyebolts to the installing blocks.
4) Insert the cables into the eyebolts and fix them tighten.
5) Connect the cables to the upper lifting ring.
6) Lift the machine slowly and keep the machine balance during whole lifting progress.

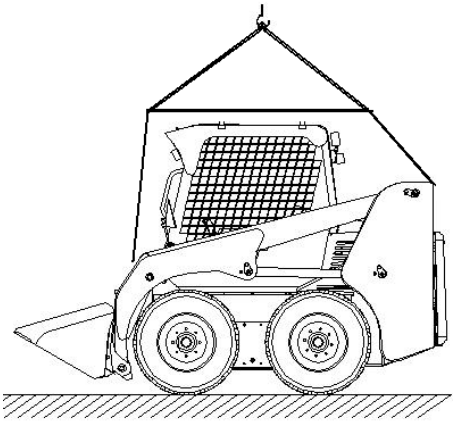

4.15 USE OF THE QUICK COUPLER

The machine is equipped with a quick coupler that makes easier the engagement with the bucket or other suitable attachments. This quick coupler is suitable for many different types of working equipments homologated by Sunward.

Some precautions for hitch and unhitch the working equipments:

- **To hitch or unhitch the bucket, choose a flat ground and make sure the machine is stable on the floor.**
- **Before unhitch the bucket, lower the bucket to the ground, putting the bottom side of the bucket directly to the ground.**
- **Clean, if it is necessary, all the part involved in the operation.**
- **Never hitch the quick coupler when you are in the cabin. The handles could move and you could result injured or even death.**
- **After hitch the quick coupler and before starting to work check that the pins are engaged correctly.**
- **Avoid using your hands to align the pins, since you could result injured.**
- **Maintain clean the area located around the mechanism.**
- **Grease the pin every time you hitch the bucket or follow the schedule described in the item 5.9 Maintenance Plan.**
- **For turning the two handles press the parking brake button and get off the machine. Never turn the handles of the mechanism while the machine is not blocked with the parking brake button.**
- **Never unhitch the bucket or other accessory when the boom is lifted up.**

4.15.1 HITCH THE BUCKET

To engage the bucket or other equipments follow the steps below:

1) Rotate the levers to unlock the coupling pins completely.
2) Move the machine to align the quick coupler with the bucket.
3) Move the machine slowly and approach the quick coupler to the bucket till the surface A touches the surface B (see picture on the right).
4) Raise the boom and fold the quick coupler to position the quick coupler combine well with the bucket. Then fold the bucket completely.
5) Stop the engine. Release the residual pressure. Raise the restrain bar.
6) Get off the machine.

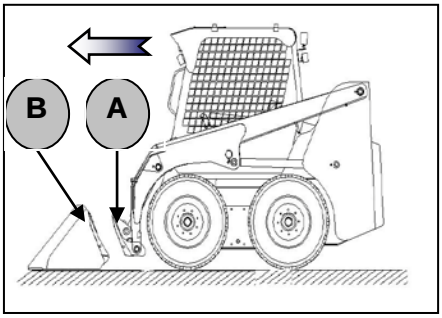

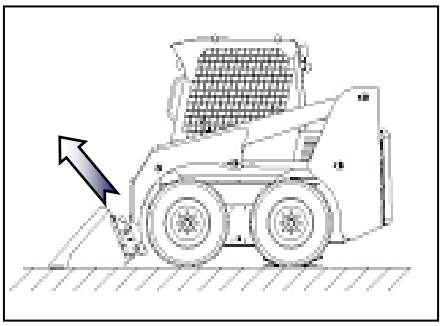

7) Rotate back the levers to the position of locking.
8) Check the coupling pins are properly positioned in its retainers.

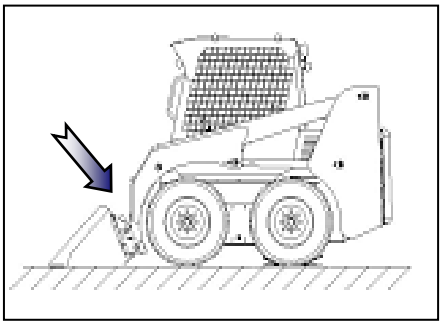

4.15.2 UNHITCH THE BUCKET

To unhitch the bucket or other equipments follow the steps below:

1) Move the machine to a level and firm surface.
2) Lower the bucket to the ground and incline forward bucket so that the bottom side rest on the ground stably.
3) Stop the engine. Release the residual pressure. Raise the restrain bar.
4) Get off the machine.
5) Rotate the levers to unlock the coupling pins completely.
6) Get on the machine, start the engine and release the parking brake.
7) Move reversely slowly, at the same time, lower a little the boom and rotate forward the quick coupler. The quick coupler topside will leave the upper seat on the bucket.

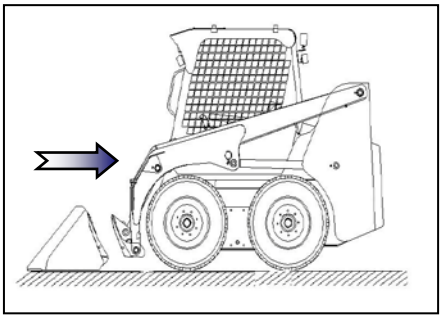

4.15.3 AJUST THE QUICK COUPLER MECHANISM

- Before adjust the mechanism make sure the bucket rest on the floor stably.
- The quick coupler mechanism has to be adjusted periodically, so that it works correctly.
- The mechanism is provided with a spring that regulates the force you need to turn the handle.
- Turning the screw 1 will compress the spring and make it stronger the turning force of the handle.
- Once adjusted the spring until the pin touches the hole of the bucket turn the screw 2 to fix the screw 1.

4.16 USE OF AUXILIARY PEDAL

The machine can be equipped with auxiliary system like excavator, forks, demolition hammer, asphalt cutter etc. An

especial pedal is installed in the cabin to control this additional equipment .The pedal controls the opening and the closing of the oil flow to the equipment. The pedal has three positions:

- Neutral Position: The hydraulic oil does not flow to the auxiliary equipment.
- Right Position: The hydraulic oil flow in one of the pipes to the auxiliary equipment and returns through the other pipe back.
- Left Position: The hydraulic oil flow in one of the pipes to the auxiliary equipment and returns through the other pipe back. In this case the oil flows always in the opposite direction than in the right position.
- One locking bale is positioned on the right side of safety guard, close the safety guard maintain the pedal position when control pedal in the Left positions. It maintains the left position until you release the mechanism by push the safety guard up.

- When you do not use the auxiliary system, engage the safety retainer (See picture below).

- **Never use auxiliary system that not approved by SUNWARD.**
- **Always apply the safety retainer when not using the auxiliary pedal.**
- **When connecting auxiliary equipment, make sure the pedal is in the neutral position and the safety retainer is engaged.**
- **About each auxiliary operation instruction, please refer to related auxiliary operation manual.**

4.17 HIGH FLOW SYSTEM

It’s useful with such attachments that need great flow rate.

Before use it:

Connect the high flow pipes;

Push the button on the right joystick supporting box.

4.18 MAXIMUM IMMERSION IN A FLUID

- **The machine could be damaged if water comes into the engine compartment.**
- **Try to not immerse the machine in fluids deeper than 200 mm.**
- **Make sure the bottom surface is strong enough.**
- **Clean the machine and grease the articulation after immerse the machine.**

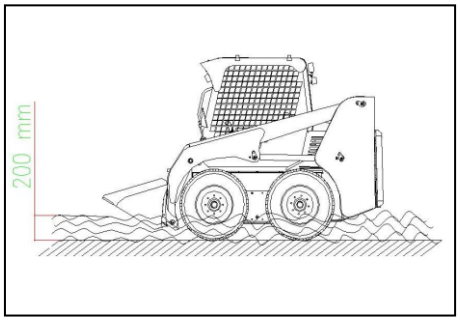

4.19 MOVE THE MACHINE WITH TOWING HOOK.

Only use cable strong enough to remove the machine.

Release the parking brake before towing.

Never tow the machine for long distance.

When the machine is stuck in mud or out of order, we need other equipments to remove the machine. Use a cable strong enough trough the towing hook in the rear side of the machine to remove the machine.

4.20 STARTING THE MACHINE WITH BOOSTER CABLES

Read carefully the safety regulations before perform starting the machine with booster cables. Always follow with the safety regulations strictly.

- **Make sure the voltages of the two machines are same and the aiding battery is with greater or at least same capacity.**
- **Make sure the booster cables are enough for the current and with good condition.**
- **When connecting the cables, avoid any contact between the two terminals (+ and -).**

For connecting the booster cables and starting the machine, proceed as follow:

1) Approach the two machines and get a proper distance to connect the booster cables. But keep the two machines not touch.
2) Connect the positive terminals (+) of the two machines with one cable.
3) Connect the negative terminals (-) of the aiding battery to the earth block of engine of the machine with the depleted battery.
4) Start the engine of the machine with the aiding battery and increase its speed.
5) Start the engine of the machine with the depleted battery.

For disconnecting the booster cables after start the machine:

1) Disconnect the connection of the negative (-) from the engine earth block and later from the battery.
2) Disconnect the connection of positive first from the aiding battery and later from the depleted battery.

4.21 LONG-TERM STORAGE

When store the machine, it should maximum retract the piston bar to cylinder to prevent piston bar corrosion; clean the machine surface and all outer parts.

4.21.1 BEFORE LONG-TERM STORAGE

Before long-term storage, procedures follow must be taken:

- Choose suitable storage location: it is better to store the machine in the room, if it only could be stored in outdoor, it must choose firm and flat ground and cover the machine.
- Locate the machine in a sheltered place. Lower the boom and rest the bucket on the ground.
- Clean the machine deeply.

- Drain and change all the fluids of the machine (engine oil, engine coolant, hydraulic oil, final transmission oil). Refill with a special anticorrosion coolant and a special washing and protecting fuel.
- Change the filters (engine fuel filter, engine oil filter, hydraulic oil filters).
- Once changed all the fluids and all the filters run the machine during a while for eliminate the residual normal fuel
- Remove the battery and store with a suitable temperature and humidity. Charge periodically the battery.
- Grease all the articulation.
- Close the hydraulic cylinders so that the rods remain inside the cylinder. It prevents from the oxidation of the rod.
- Seal the end of the exhaust pipe.
- Block the machine by pressing the Parking brake button.

4.21.2 DURING THE PERIOD OF INACTIVITY

- Start, move and operate the machine for a while once per month. Make sure to ventilate the store before start and move the machine.
- Charge the battery also once per month.

4.21.3 AFTER THE PERIOD OF INACTIVITY

After a long time of inactivity, proceed as follow:

- Clean the machine deeply.
- Release the exhaust pipe.
- Check all the fluids level of the machine.
- Install the battery and make sure it is charged.
- Turn the key to position “Preheat” (See item 4.2 Starting the Machine) and check if the entire indicators are working properly (Indicator for the fuel level, Indicator for the oil pressure, Battery Warning Light, Preheating Light). Maintain the key in this position until the preheating light goes out.
- Start the engine and leave it at idle speed during 15 minutes.
- Make sure all the function of the machine work properly.
- Begin slowly to move the machine for warming up the hydraulic oil.

5 MAINTENANCE

5.1 REQUIREMENT SERVICE

The machine has been designed and manufactured for giving the maximum autonomy with a minimum of maintenance. Before sell the machine SUNWARD has test the machine to ensure an optimum working of the machine. To keep the machine in good working it is recommended

to do maintenance program describes in this manual. In the following items it is described how to do the maintenance and in which intervals. For maintaining the efficiency of the machine it is recommended that only specialized person from SUNWARD SERVICE do the maintenance task, since they have the necessary tools to do the maintenance correctly and secure. All the services done to the machine has to be registered in a register table given with the machine. Only stuff from SUNWARD has the capacity to fill up the register table.

5.2 ADVICE FOR THE MAINTENANCE

- Keep the machine always clean and tidy up. It makes much easier to find out troubles.
- Follow the recommendations given in the section 2 “security” to ensure your security and the security of the people around you.
- Before open the engine hood makes sure all the security devices are engaged and the engine is stopped.
- Lower the boom and bucket to the ground when you need to check the hydraulic system.
- Apply the parking brake when go out from the machine.
- Raise the cabin following the recommendation .
- Use always the recommended oil and grease given in this manual.
- Before carries out any maintenance put warning plate for ensure that nobody switch on the machine.
- Make sure you carry out the maintenance in a secure and flat place.
- Check and change the oil in a clean place to prevent that dust or impurities get into the tank.
- Wait after the hydraulic oil cool down to do any maintenance work.
- Never use flammable fluids to clean the machine.
- Never spray high pressure to the radiator, since you can damage it.
- Never spray water directly inside the cabin, since you can wet the electric system connectors or wetting the ignition switch.
- When working in dusty environment check air filter, radiator, filters and electric components more often than in usual.
- Take care before using the machine in mud or rainy whether to carry out a general lubrication. Clean the machine immediately after work under damp conditions in order to protect the different components from rust.
- Use the oil recommended in this manual. Use another kind of oil could damage the machine. It is recommended to not mix the oil form different brands, neither for top up the different levels of oils.
- Follow the national and local related regulation for throwing out oils, filters, coolants and batteries, since they can damage the environment.
- Avoid the skin contact with used oil since it could irritate it. If your eyes get in contact with oil clear your eyes with plenty water and if it persists contact a doctor. In case of ingest accidentally oil contact as soon as possible a doctor.

5.3 GENERAL INFORMATION FOR CARRY OUT THE MAINTENANCE

5.3.1 OIL AND COOLANT AT CORRESPONDING ENVIRONMENTAL TEMPERATURE

	AMBIENT TEMPERATURE									SPECIFIED CAPACITY	SUPPLEMENTARY CAPACITY
	-22	-4	14	32	50	68	86	104	122°F		
	-30	-20	-10	0	10	20	30	40	50°C		
ENGINE OIL					SAE 20W-50 (Tropic)						
			SAE 15W-40 (All seasons)								
		SAE 10W-30 (All seasons)									
						SAE 30					
		SAE 10W(Winter)									
	SAE 0W-40 (Synthetic)										
HYDRAUIC OIL		MAT 3509 (Factory fill)									
			SAE 10W-30								
		SAE 0W-40 (Synthetic)									
BUTTER			NLGI No.2								
COOLANT	ADDING ANTIFREEZE										

■ **NOTE**

Engine Oil :

- **Refer to the following table for the suitable American Petroleum Institute (API) classification of engine oil according to the engine type (with internal EGR, external EGR or non-EGR) and the Fuel Type Used : (Low Sulfur, Ultra Low Sulfur or High Sulfur Fuels).**

Fuel Type	Engine oil classification (API classification)	
	Engines with non-EGR Engines with internal EGR	Engines with external EGR
High Sulfur Fuel [0.05 % (500 ppm) ≤ Sulfur Content < 0.50 % (5000 ppm)]	**CF** (If the "CF-4, CG-4, CH-4, or CI-4" engine oil is used with a high-sulfur fuel, change the engine oil at shorter intervals. (approximately half))	–
Low Sulfur Fuel [Sulfur Content < 0.05 % (500 ppm)] or Ultra Low Sulfur Fuel [Sulfur Content < 0.0015 % (15 ppm)]	**CF, CF-4, CG-4, CH-4** or **CI-4**	**CF** or **CI-4** (Class CF-4, CG-4 and CH-4 engine oils cannot be used on EGR type engines.)

EGR : Exhaust Gas Re-circulation

W1024941

- **CJ-4 classification oil is intended for use in engines equipped with DPF (Diesel Particulate Filter) and is Not Recommended for use in Kubota E3 specification engines.**
- **Oil used in the engine should have API classification and Proper SAE Engine Oil Viscosity according to the ambient temperatures where the engine is operated.**
- **With strict emission control regulations now in effect, the CF-4 and CG-4 engine oils have been developed for use with low sulfur fuels, for On-Highway vehicle engines. When a Non-Road engine operates on high sulfur fuel, it is advisable to use a "CF or better" classification engine oil with a high Total Base Number (a minimum TBN of 10 is recommended).**

Fuel :

- **Cetane Rating : The minimum recommended Fuel Cetane Rating is 45. A cetane rating greater than 50 is preferred, especially for ambient temperatures below –20 °C (–4 °F) or elevations above 1500 m (5000 ft).**
- **Diesel Fuel Specification Type and Sulfur Content % (ppm) used, must be compliant with all applicable emission regulations for the area in which the engine is operated.**
- **Use of diesel fuel with sulfur content less than 0.10 % (1000 ppm) is strongly recommended.**
- **If high-sulfur fuel (sulfur content 0.50 % (5000 ppm) to 1.0 % (10000 ppm)) is used as a diesel fuel, change the engine oil and oil filter at shorter intervals. (approximately half)**
- **DO NOT USE Fuels that have sulfur content greater than 1.0 % (10000 ppm).**
- **Diesel fuels specified to EN 590 or ASTM D975 are recommended.**
- **No.2-D is a distillate fuel of lower volatility for engines in industrial and heavy mobile service. (SAE J313 JUN87)**
- **Since KUBOTA diesel engines of less than 56 kW (75 hp) utilize EPA Tier 4 and Interim Tier 4 standards, the use of low sulfur fuel or ultra low sulfur fuel is mandatory for these engines, when operated in US EPA regulated areas. Therefore, please use No.2-D S500 or S15 diesel fuel as an alternative to No.2-D, and use No.1-D S500 or S15 diesel fuel as an alternative to No.1-D for ambient temperatures below –10 °C (14 °F).**

1) SAE : Society of Automotive Engineers
2) EN : European Norm
3) ASTM : American Society of Testing and Materials
4) US EPA : United States Environmental Protection Agency
5) No.1-D or No.2-D, S500 : Low Sulfur Diesel (LSD) less than 500 ppm or 0.05 wt.%
No.1-D or No.2-D, S15 : Ultra Low Sulfur Diesel (ULSD) 15 ppm or 0.0015 wt.%

5.3.2 CAPACITIES

ITEMS	CAPACITY (Litre)		
Model	SWL2820/2830	SWL3220/3230	SWL4018
Hydraulic oil tank	35	60	65
Sprocket oil tank	24	26	30
Engine coolant	8	9	9.9
Engine oil	9.5	11	13.2
Fuel tank	75	110	90

5.3.3 CODIFICATION OF THE MAIN CHANGED PART

The following table shows the codification of the parts need changing frequently.

PART	SUPPLIER	CODE		
		SWL2820	SWL2830	SWL3210
Engine Air Filter (1)	Kubota	730402010011	750201013571	730402010011
Engine Air Filter (2)	Kubota	730402010012	750201013572	730402010012
Oil-water Separator Filter	Kubota	730403000127	750201013448	730403000127
Engine Oil Filter	Kubota	730401000196	730403000518	730403000073
Engine Fuel Filter	Kubota	730403000074	750201013569	730403000074
Hydraulic Oil Filter	Kai Cen	730403000484	730403000484	730403000059(Standard) 730403000498(Matching)
PART	SUPPLIER	CODE		
		SWL3220	SWL3230	SWL4018
Engine Air Filter (1)	Kubota	730403000155	750201013571	750201011485
Engine Air Filter (2)	Kubota	730403000156	750201013572	750201011486
Oil-water Separator Filter	Kubota	730403000127	750201013448	750201011231
Engine Oil Filter	Kubota	730403000073	750201013570	730403000073
Engine Fuel Filter	Kubota	730403000074	750201013450	730403000074(Standard)
Hydraulic Oil Filter	Kai Cen	730403000484	730403000484	730401010025(Matching)

5.3.4 TORQUE FOR SCREWS

Unless other specification, tighten the nuts and bolts according to the torques shown in the below table. Tighten the goods by the wrenches with gauge.

Thread Diameter (mm)	Quality 8.8 Torque (Nm)	Quality 10.9 Torque (Nm)
M 6	9~12	13~16
M 8	22~30	30~36
M 10	45~59	65~78
M 12	78~104	110~130
M 14	124~165	180~210
M 16	193~257	280~330
M 18	264~354	380~450
M 20	376~502	540~650
M 22	512~683	740~880
M 24	651~868	940~1120
M 27	952~1269	1400~1650
M 30	1293~1723	1700~2000

When tighten parts of the machine made by steel be careful to not tighten it too strong, since you could damage this parts.

5.3.5 TOOL LIST

No.	Name	Qty.
1	INNER HEXAGON SPANNER S5 GB5356	1
2	DOUBLE-END SPANNER 8-10 GB4388	1
3	DOUBLE-END SPANNER 13-16 GB4388	1
4	DOUBLE-END SPANNER 17-19 GB4388	1
5	DOUBLE-END SPANNER 18-21 GB4388	1
6	DOUBLE-END SPANNER 30-32 GB4388	1
6	ADJUSTABLE WRENCH 300X36	1
8	CROSS POINT SCREWDRIVER WITH PLASTIC HANDLE 6X150 GB1064-89	1
9	FLAT HEAD SCREWDRIVER WITH PLASTIC HANDLE 8X200	1
10	WIRE PLIERS 200 GB6259.1	1
11	GREASE GUN LH400CCH-18	1
12	ENGINE OIL FILTER SPANNER	1
13	TOOL BOX 385X180X155	1
14	BALL HAMMER 1.5P	1
15	CROSS POINT SCREWDRIVER 75X5	1

5.3.6 LUBRICATION POINTS

The following drawing shows the main lubrication points.

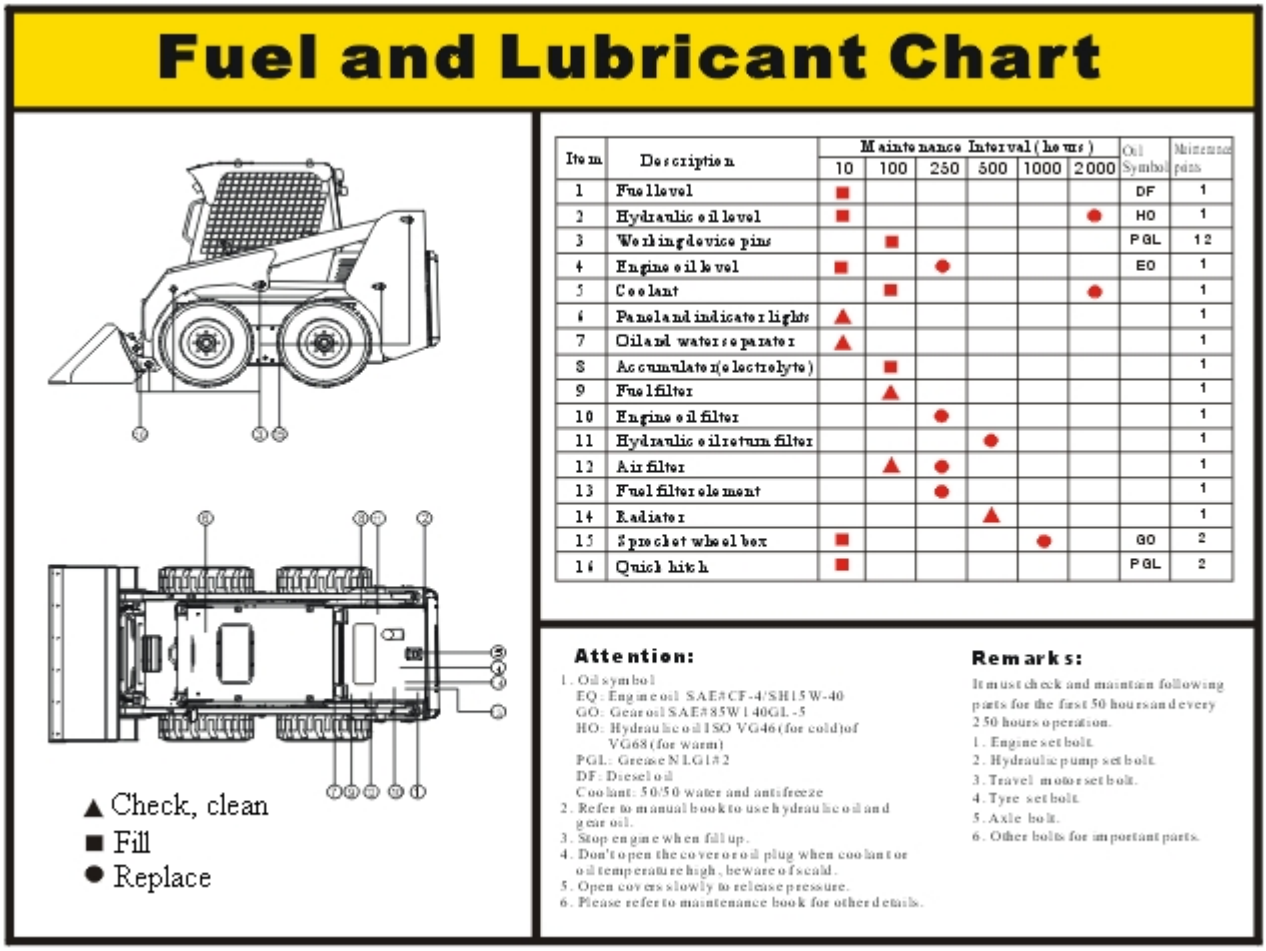

Item	Description	Maintenance Interval (hours)						Oil Symbol	Maintenance points
		10	100	250	500	1000	2000		
1	Fuel level	■						DF	1
2	Hydraulic oil level	■					●	HO	1
3	Working device pins		■					PGL	12
4	Engine oil level	■		●				EO	1
5	Coolant		■				●		1
6	Panel and indicator lights	▲							1
7	Oil and water separator	▲							1
8	Accumulator (electrolyte)		■						1
9	Fuel filter		▲						1
10	Engine oil filter			●					1
11	Hydraulic oil return filter				●				1
12	Air filter		▲	●					1
13	Fuel filter element			●					1
14	Radiator				▲				1
15	Sprocket wheel box	■				●		GO	2
16	Quick hitch	■						PGL	2

5.4 DESCRIPTION MACHINE FOR MAINTENANCE

The following items describe the different machine's parts or systems for a better understanding by doing the maintenance. This manual tries to go deeper in these parts or system that needs more attention in the maintenance.

5.4.1 ENGINE DESCRIPTION

This section describes or gives some advice about the engine. For deeper information about the engine consult the engine manual which should be given together with this manual.

- The engine can be considered as the heart of the machine, so it needs a special attention.
- Take special care with the engine oil, since a good lubrication can extend the life of the engine.
- Use only oil recommended in this manual.
- Coolant containing antifreeze is flammable. Never contact this type of coolant with a flame.
- Use only coolant recommended in this manual. Never use any other coolant, since it could damage the rubber couplings.
- Take special care in the engine fuel, since a wrong fuel damage the engine.

- Do not refill the tank fully, since it is recommendable to leave enough space to expansion of fuel.
- When the fuel run out or when the fuel filter has been changed the pipes needs to be bleed.
- The fuel tank is located in the backside of the machine and has a capacity of 70L for SWL2820.
- Change all of fuel supply pipes every 2 years or 4000 hours (whichever occurs first).

Remark: please use real SUNWARD INTELLIGENT EQUIPMENT Co.,Ltd parts or approved by Sunward.

5.4.2 HYDRAULIC SYSTEM DESCRIPTION

- Take special care while working on the hydraulic components, since they work with high pressure and could result in danger.
- Be careful when work on with hydraulic system after work, since it is hot and could result in danger.
- Bleed the hydraulic circuit after change the hydraulic oil or the hydraulic oil filter. For bleeding the circuit proceed as follow:

  1) Start the engine

  2) Move all the cylinders slowly, stop them when it is approximately 100 mm from the end of their strokes.

  3) Move the cylinders slowly a few times until the end of the stroke.
- Periodically check the hydraulic connexion, since they are suffering high pressure.
- When changing one of the hydraulic components check the state of the gaskets and O-rings, since it is a great opportunity to change them.
- **Change all hydraulic pipes every 2 years or 4000 hours (whichever occurs first).**

5.4.3 ELECTRICAL SYSTEM

- Never wet any of the electric components, since the wet electric components could result damaged.
- Never remove any electric component installed and install any other component with different characteristics.。
- If any welding operation has to be carried out, disconnect the battery and the alternator.

5.4.4 SAFETY BELT

- **Change the seat belt every 4 years.**
- **Check the situation of seat belt frequently.**

5.5 MAINTENANCE PLAN

A maintenance plan has been described in this manual in order to maintain the efficiency of the machine and his parts. It is recommendable to follow this plan. Be aware of the working hours by reading the hour meter.

Write down all the maintenance assistance done to the machine in order to do a proper maintenance plan. The maintenance has to carry out by authorized and qualified persons.

The following table summarizes the entire maintenance plan.

TASKS	BS	50	100	250	500	1000	2000	WR
5.5.1.1 CHECKING ENGINE OIL LEVEL	X							
5.5.1.2 CHECKING ENGINE COOLANT LEVEL	X							
5.5.1.3 CHECKING FUEL LEVEL	X							
5.5.1.4 CHECKING HYDRAULIC OIL LEVEL	X							
5.5.1.5 CHECKING THE ELECTRIC CABLES	X							
5.5.1.6 CHECKING THE TIRES	X							
5.5.1.7 CHECKING THE SEAT BELT	X							
5.5.1.8 CHECKING THE LEAKING OF OIL	X							
5.5.1.9 CHECKING THE QUICK COUPLER	X							
5.5.1.10 CHECKING THE WATER AND SEDIMENTS SEPARATOR	X							
5.5.2.1 CHECKING THE COOLER PIPES		X						
5.5.2.2 CHECKING THE COOLANT LEVEL		X						
5.5.2.3 CHECKING THE TIRE PRESSURE		X						
5.5.2.4 CREASING THE PINS OF BOOM AND CYLINDERS		X						
5.5.2.5 CHECKING THE WHEEL NUTS DRIVING TORQUE		X						
5.5.3.1 CLEANING THE TERMINALS OF THE BATTERY			X					
5.5.3.2 CLEANING THE OIL TANK'S BREATHER			X					
5.5.3.3 CHECKING THE CYLINDER RODS			X					
5.5.3.4 GREASING ALL OF PINS			X					
5.5.4.1 CHECKING THE GEARING				X				

CHAIN TENSION								
5.5.4.2 ADJUST THE CHAIN IF NECESSARY				X				
5.5.4.3 CHECKING THE FAN BELT				X				
5.5.4.4 CLEANING THE RADIATOR				X				
5.5.4.5 CHECKING THE OIL LEVEL IN THE GEAR CHAIN BOX				X				
5.5.4.6 CHANGING THE ENGINE OIL				X				
5.5.4.7 CHANGING THE ENGINE OIL FILTER				X				
5.5.4.8 CHANGING THE FUEL FILTER				X				
5.5.4.9 CHECKING THE NUT TORGUE OF THE HYDRAULIC MOTOR AND THE HUB HOLDING TO THE CHASSIS				X				
5.5.5.1 CLEAN THE FUEL-WATER SEPATATOR					X			
5.5.5.2 CLEAN THE TIGHTENESS OF PUMP FIXING SCREWS					X			
5.5.5.3 CHECKING THE BATTERY FLUID LEVEL					X			
5.5.5.4 CHANGING THE HYDRAULIC OIL FILTER					X			
5.5.6.1 CHANGING THE OIL IN THE GEAR CHAIN BOX						X		
5.5.6.2 CHANGING THE HYDRAULIC OIL AND CLEAN THE SUCTION						X		
5.5.6.3 CHANGING THE AIR FILTER						X		
5.5.6.4 CHECKING THE PRESSURE OF PUMP AND VALVE						X		
5.5.6.5 CHANGING THE HYDRAULIC OIL TANK BREATHER						X		
5.5.6.6 CHECKING THE TIGHTNESS OF CYLINDER HEAD SCREW						X		
5.5.6.7 CHECKING THE LOOSENESS OF VALVE						X		
5.5.7.1 CHANGING THE COOLANT							X	

5.5.7.2 CHANGING THE SUCTION FILTER							X	
5.5.7.3 CHECKING THE STARTER AND ALTERNATOR							X	
5.5.8.1 DRAINING THE FUEL TANK								X

BS: Before Starting

WR: When Required

5.5.1 BEFORE STARTING

5.5.1.1 CHECKING ENGINE OIL LEVEL

- Cool down the oil if the engine was running before. In this case wait 15 minutes for cooling down the oil before carry out the check.
- For checking the oil level, raise the dipstick (see photo below) and read the oil marks on it. The oil sign should be between the Min. and Max. limit written on the dipstick.
- If the oil mark is lower than the minimum limit, refill engine oil as soon as possible. Refill the engine oil through the inlet shown in the right figure.

5.5.1.2 CHECKING ENGINE COOLANT LEVEL

- Cool down the coolant if the engine was running before. In this case wait 15 minutes for cooling down the coolant before carry out the check.
- The coolant level in the coolant tank should be between the two limit marks.
- If necessary, add coolant through the coolant cap (shown in the right figure).
- **Do not remove the coolant cap when the fluid is hot, since it could spray out violently and cause injury.**

5.5.1.3 CHECKING ENGINE FUEL LEVEL

- For checking the engine fuel level use the indicator located in the instrument panel. The indicator should comes on when turning the ignition key to position “ON”.
- If the fuel level is low, refuel before starting engine.

5.5.1.4 CHECKING THE HYDRAULIC OIL LEVEL

- Check the oil level through the gauge located in the backside of the hydraulic tank. The oil level has to be between the two limit marks on the

gauge. Refill with the suitable oil if necessary.

- When refill hydraulic oil, do not exceed the Maximum limit.
- The level must be checked with the machine in a level surface and the oil cooled down.
- Check the hydraulic circuit when an abnormal decrease of the oil level is observed.
- Before check the level in the gauge, release the pressure inside the hydraulic tank by loosing the filling cap.
- Before check the level in the gauge, release the pressure inside the circuit by lowering slowly the hydraulic cylinders.

5.5.1.5 CHECKING THE ELECTRIC CABLES

- **Make sure all relays and fuses are well fastened and there are not loosen cables or connections.**
- **Make sure there is no sign of short circuit in the electrical system.**
- **Make sure there is no corroded cable or fuses. Change all the corroded cables or fuses with same character.**

5.5.1.6 CHECKING THE TIRES

- **Over inflated or overheated tires could burst during operation of the machine.**
- **Check visually the state of the tires. Make sure there are not cracked and make sure there are not wore out points.**
- **Check manually that all the nuts are tightened well.**

5.5.1.7 CHECKING THE SAFETY BELT

- **Check visually the screw and nuts that fasten the security belt. Make sure they are in good condition.**

5.5.1.8 CHECKING THE LEAKING OF OIL

- Check visually the hydraulic oil circuit and make sure there are no leaking in it. If any leaks appear, repair it immediately.
- Clean the spilled oil if there is.

5.5.1.9 CHECKING THE QUICK COUPLER

- **Check visually that the two coupler-pins are engaged. If any of the mechanisms is loosen (this means one or two pins are not engaged), you and the people around could result injured or even death.**
- **Never stand under the bucket, when the boom is raised.**

5.5.1.10 ECKING THE WATER AND SEDIMENTS SEPARATOR

- The fuel filter has a separator for water and sediment that it is recommendable to drain every time you start the engine.
- The water and sediment separator is located in the engine compartment. See the picture.
- When the ring floats on the water present in the separator, it needs draining. Do the following procedures:

1) Close the handle to cut the flow of fuel to the separator.
2) Loose the wring in the bottom side of the separator. Drain the water until clear fuel flows out and close the wring.
3) Open the handle to let the fuel flow into the separator.
4) Drain the fuel tank .
5) Bleed the fuel supply circuit .

5.5.2 EVERY 50 HOURS OF OPERATION

5.5.2.4 CHECKING THE COOLER PIPES

- **Check the entire cooler pipes for any leakage. The machine could overheat if a big quantity of coolant spells out. The hydraulic circuit could result damage if a big quantity of oil spells out.**
- **The operator has to conscious of he importance of the coolant system and also of the hydraulic circuit.**

5.5.2.5 CHECKING THE COOLANT LEVEL

- Cool down the engine in case it was running before. In this case wait 15 minutes for cooling down the engine before carry out the check.
- Carry out the check with the machine on an level surface.
- Loosen the radiator cap slowly in order to release the pressure inside the radiator.
- Add coolant to the radiator if necessary.
- **Do not remove the radiator cap when the fluid is hot, since it could spray out violently and cause injury.**
- **Make sure there is not air leakage in the radiator-expansion tank tube. It could mark the wrong coolant level.**

5.5.2.6 CHECKING THE TIRE PRESSURE

- **Never exceed the pressure recommended in this manual. The tire could blast, you or the people around could result injured or even death .**
- **While inflating the tires never stand beside to the tires.**
- **While inflating the tires make sure you use the proper equipment.**
- **In case a tire has lost the entire air, only specialized person can repair it.**

5.5.2.7 GREASING THE PINS OF BOOM AND CYLINDERS

- Grease the pin located in the top of the boom. (See drawing 5.3.5 Lubrication point)
- Grease the pins that connect the cylinders (See drawing 5.3.5 Lubrication point)

5.5.2.8 CHECKING THE WHEEL NUT DRIVING TORQUE

- Check the wheel nut torque every 50 hours. Refer to the following table.

Driving Torque for Wheels	
Front Wheels	Rear Wheels
150 Nm	150 Nm

5.5.3 EVERY 100 HOURS OF OPERATION

5.5.3.1 CLEANING THE TERMINALS OF THE BATTERY

- Keep the battery terminals clean is very important, since it ensure a good electricity flow.。
- Clean the battery with gloves. Never clean the terminals directly with your hands.

5.5.3.2 CLEANING THE OIL TANK'S BREATHER

- Keep the tank breather clean is very important, since it ensures a pressure release inside the oil tank.

5.5.3.3 CHECKING THE CYLINDER RODS

- Make sure the cylinder rods are not corroded or damaged. It could reduce the machine's efficiency.

5.5.3.4 GREASING ALL OF PINS

- Grease the pins specified in the item 5. 3.5 Lubrication Points.

5.5.4 VERY 250 HOURS OF OPERATION

5.5.4.1 CHECKING THE GEARING CHAIN TENSION

- **Every transmission side is compound with 2 chains. One chain for one wheel.**

For checking the rear gearing chain tension proceed as follow:

1) Block the machine by pressing the Parking brake button.
2) Lift up the rear part of the machine and maintain it lifted by putting blocks under the machine (See picture below).
3) Fix a point on the perimeter of the tire. Try to do it in the highest position.
4) Try to move the entire wheel.
5) If the angle between the original position of the point and the turned position is more than 2 degree, the gearing chain is loosening.

Proceed on the same way for checking the other rear gearing chain.

Proceed on the same way for checking the front chain.

5.5.4.2 ADJUSTING THE CHAIN IF NECESSARY

Proceed as follow to tense the gear chain:

1) Remove the wheel.
2) Adjust the adjusting screw against the hub-holding plate (See picture below).
3) Loosen the screws that support the hub-holding plate (See picture right).
4) Turn the adjusting screw a few millimeters for tensing the chain.
5) Fasten the screws that hold the hub holding. Try to fasten the screws every 3 screws step by step.
6) Mount the wheel.

- **Try to do the adjustment on an level and clean surface. Make sure it is not slippery.**

5.5.4.3 CHECKING THE FAN BELT

- Check the engine manual

5.5.4.4 CLEANING THE RADIATOR

- Use jet of compressed air or low-pressure water for cleaning the radiator.
- If necessary use products available in the market specially prepared for cleaning radiators.
- **Never use oily products, since it facilitate the adhesion of dust and reduces the efficiency of the radiator.**

5.5.4.5 CHECKING THE OIL LEVEL IN THE GEAR CHAIN

- **The checking has to be carried out in an level surface.**

Proceed as follow to check the gear chain oil level:

1) Screw off the screw located in the bottom side on the chassis (See picture below).
2) If the oil reaches the high of the hole, there is enough oil. If the oil is lower than the hole, refill with the recommended type oil given in this manual.

5.5.4.6 CHANGING THE ENGINE OIL

- Proceed as follow to change the engine oil: refer to the ENGINE OPERATION AND MAINTENANCE MANUAL before you doing change the engine oil.

  1) Put a suitable container under the machine so that the oil can be drained into it.
  2) Remove the draining oil screw so that the oil flows into the container.
  3) During the oil is flowing remove the engine refilling cap, in order easy the flow.
  4) Check and clean the engine oil drain plug treads and sealing surface, install the drain plug.
  5) Refill with the recommended engine oil given in this manual.
  6) Fill the engine oil till the oil level to the H mark on the dipstick.
  7) Close the refilling cap.

- **Do not proceed to change the engine just after stopping the engine, since the oil is still hot. Wait a while until the oil cool down.**
- **Oil is considered special waste. It has to be collected following the current environment regulation.**

5.5.4.7 CHANGING THE ENGINE OIL FILTER

Proceed as follow to change the engine oil filters:

1) Unscrew the filter head with a suitable tool.
2) Clean the filter support.
3) Lubricate the seal of the new filter.
4) Screw the filter. Turn it by hands for a half turn.

5) Refill the engine with new oil. It has to be the oil recommended in this manual.
6) Start the engine and make sure the indicator for the engine oil pressure goes out.

- **Make sure you use the filter recommended in this manual.**
- **Do not proceed to change the engine oil filter just after stopping the engine, since the oil is still hot. Wait for a while until the oil cool down.**
- **Oil filters are considered special waste. It has to be collected following the current environment regulation.**
- **Use special spanner in order to ensure not damage the filter.**

5.5.4.8 CHANGING THE FUEL FILTER

- **Take into consideration that the fuel is flammable. Take care by handling with fuel.**
- **Use always the fuel filters recommended in this manual.**

Proceed as follow for changing the fuel filter located in the engine compartment (See picture below):

1) Remove the fuel filter.
2) Clean the gasket surface of filter head with a lint-free cloth.
3) Discard the O-ring.
4) Install a new O-ring.
5) Fill the new filter with clean fuel, and lubricate the O-ring seal with clean lubricating engine oil.
6) Install the new filter.

- **Make sure you use the filter recommended in this manual.**
- **Do not proceed changing the fuel filter just after stopping the engine, since the engine body is still hot.**
- **Oil filters are considered special waste. It has to be collected following the current environment regulation.**

- **Use proper tools only in order to avoid damaging the filter.**

5.5.4.9 CHECKING THE NUT TORQUE OF THE HYDARULIC MOTOR AND THE HUB HOLDING TO THE CHASSIS

- For the operator's security check the screw that hold the hydraulic motor to the chassis.

Take as reference the following driving torque given in the following table:

Driving Torque for Hydraulic Motor	160 Nm

- Check the driving torque that holds the hub-holding.

Take as reference the following driving torque given in the following table:

Driving Torque for Hub-Holding	160 Nm

5.5.5 EVERY 500 HOURS OF OPERATION

5.5.5.1 CLAEN THE FUEL-WATER SEPARATOR

Proceed as follow for cleaning the fuel-water separator:：

1) Turn the handle to cut off the fuel flow into the separator.
2) Loosen the fuel-water separator by a ring (See picture below).

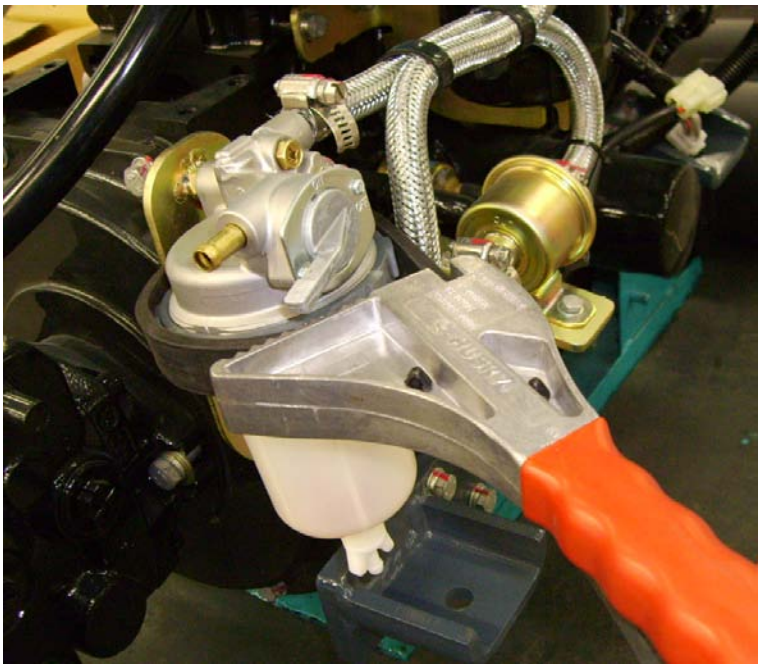

3) Clean the inner part of the separator with fuel.
4) Mount again the separator by tightening the ring again.
5) Release the handle to allow fuel into the separator.
6) Bleed the fuel circuit by turning a while ignition key to position START during 20 seconds.

- **Before precede to clean the separator cool down the engine.**
- **After bleeding the circuit, turn the ignition key to preheating position for 2 minutes and then start the engine.**

- **Take into consideration that fuel is a flammable fluid. Clean the spilled fuel in order to prevent risk of fire.**

5.5.5.2 CHECK THE TIGHTENESS OF PUMP FIXING SCREWS

- Check and if necessary tighten the screws of the gear pump fixing point.
- Take as reference the driving torque shown in the following tables:

Driving Torque for Piston Pump Elastic Coupler	Driving Torque for Gear Pump Piston Pump
130 Nm	130 Nm

5.5.5.3 CHECKING THE FLUID LEVEL OF THE BATTERY

For checking the fluid level of the battery proceed as follow:

1) Open the plug on the topside of the battery.
2) Check the acid level. The acid level has to be 6 mm above the plate edge.
3) Refill with distilled water if necessary.
3) Put back and tighten the plug.

- **Follow all the security regulation describes in the section 2.5.6.**
- **Park the machine on an level surface before checking the fluid level.**
- **In case you get in contact with the electrolyte, wash with plenty water and consult a doctor.**
- **Grease the terminals with special anti-oxidation if they are oxidized.**

5.5.5.4 CHANGING THE HYDRAULIC OIL FILTER

- **Never change the hydraulic oil filter when the oil is warm.**
- **Used filters must be collected following the local regulation.**

Proceed as follow for changing the hydraulic oil filter:

1) Remove the oil tank cap for releasing the remaining pressure inside the tank.
2) Remove the oil filter.
3) Renew the gasket when putting the new filter.
4) Put back the oil tank cap.

5.5.6 EVERY 1000 HOURS OF OPERATION

5.5.6.1 CHANGING THE OIL IN THE GEAR CHAIN BOX

Proceed as follow for draining the oil from the gear chain box:

1) During the oil is hot (just after use the machine) screw off the drain plug located in the front part of the chassis (see picture below).
2) While the oil's draining screw off the screw located on the top of the chassis (see picture below).

3) Once the oil is drained screw on the plug located in the front part and fill through the plug located in the top until the oil reaches the lower edge of the hole. Only fill with oil recommended in the manual.
4) Tighten the screw located in the side.

5.5.6.2 CHANGING THE HYDARULIC OIL AND CLEAN THE SUCTION

Proceed as follow to change the hydraulic oil:

1) Park the machine on a level surface and release the residual pressure by moving a few times all the cylinders. Lower the boom and rest the bucket on the floor.
2) Cool down the oil by waiting a few minutes.
3) Remove the filling cap from the hydraulic tank.
4) Position a suitable container under the machine, so that the oil can flow into it.
5) Turn on the cock located under the hydraulic tank (See picture below).
6) Fill the circuit again with recommended hydraulic oil given in this manual.
7) Make sure hydraulic oil reaches the desiderate level. After the oil level has reached his level, the hole is completely full of oil when removing the plug in the piston pump.
8) Also check the oil level on the gauge located in the backside (See picture below).
9) If the gauge does not mark the maximum level and in the pump the hole is completely full, top up with oil recommended in this manual.
10) Wait a few minutes before operate the machine.
11) Move slowly every hydraulic cylinder.
12) Check again the gauge and in case it needs, refill it with more oil.

- **Never start the engine with empty oil tank, since it could damage hydraulic components.**
- **Hydraulic oil is considered as danger for the environment, since it can damage it. Throw the oil following the local regulations.**

5.5.6.3 CHANGING THE AIR FILTER

- **Always when the indicator of air filter pressure in the panel comes on, change the filter.**
- **Never wash the air filter, always change it with a new one.**
- **Never run the engine without air filter.**

Proceed as follow to change the air filter:

1) Stop the engine and wait till it cools down.
2) Loose the three flanges (1) that close the filter. Remove the cap (2).
3) Remove the filter (3) inside from inside. If necessary remove the part inside the filter (4).
4) Clean inside the filter-container.

5) Introduce the new filters carefully inside the filter-container.
6) Tighten the flanges and close the filter-container. Make sure the air's entrance (5) is in the bottom side of the air filter.
7) Make sure the switch (6) is connected.

5.5.6.4 CHECKING THE PUMP'S PRESSURE AND THE VALVE

5.5.6.5 CHANGING THE HYDRAULIC OIL TANK BREATHER

5.5.6.6 CHECKING THE TIGHTNESS OF THE CYLINDER HEAD SCREW

5.5.6.7 CHECKING THE LOOSENESS OF THE VALVE

5.5.7 EVERY 2000 HOURS OF OPERATION

5.5.7.1 CHANGING THE COOLANT

- **Never change the coolant just after stopping the engine, since the coolant is still warm. Let the coolant cool down until it goes under 40-45˚C.**
- **Never loosen the coolant cap when the coolant is still hot. Warm water could spill out violently and produce burnings.**
- **Always loose the coolant cap slowly, in order to release the pressure inside the coolant tank.**

Proceed as follow for changing the coolant:

1) Loosen slowly the coolant tank cap.
2) Open the drain plug located in the bottom side of the radiator (See picture below).
3) Remove the drain plug located in the bottom side of the engine.
4) Drain the coolant until it stops to flow.
5) Put on and screw up the two drain plug again.
6) Refill with the recommended coolant described in this manual.
7) Start the engine and let it run at idle speed for a while.
8) Stop the engine.
9) Check the coolant level. If necessary refill until the level reaches the right level.

5.5.7.2 CHECKING THE STARTER AND ALTERNATOR

5.5.8 WHEN REQUIRED

5.5.8.1 DRAINING THE FUEL TANK

- **Drain the fuel tank always with temperature exceeding 0˚C and before starting the machine. If the temperature is lower than 0˚C drain the fuel tank after using the machine, to prevent the condensate.**

Proceed as follow for draining the fuel tank:

1) Remove the fuel tank cap.
2) Position a container under the draining valve located in the bottom side of the chassis.
3) Release the draining valve.

4) Led the fuel flow totally.
5) Close the draining valve.
6) Refill the tank with the fuel type recommended in this manual.

5.5.9 TROUBLE SHOOTING

Trouble	Cause	Solution
Electric system		
Lamps do not work properly even with engine running at high speed	• Fault cables	• Check and repair any loose terminal and connection
Lamps come on intermittently with engine running	• Faulty fan belt tension	• Check the belt tension and adjust it or change it if it is necessary
Charge warming light dose not go out when the engine running, even at high speed	• Faulty alternator • Faulty cables	• Change • Check and repair
Alternator emits abnormal noise	• Faulty alternator	• Change
Starter does not work with key in START position	• Faulty cables • Battery charge insufficient • Faulty main fuse	• Check and repair • Charge battery • Change
Starter pinion engages and disengages while starting engine	• Battery charge insufficient	• Charge battery
Engine oil pressure warming light does not come on when engine is stopped	• Faulty bulb • Faulty pressure sensor	• Change • Change
Charging warming light dose not come on when engine is stopped	• Faulty bulb • Faulty cables	• Change • Check and repair
Hydraulic system		
Pumps emit abnormal noise	• No oil in the tank • Faulty pump • Hydraulic oil unsuitable for the temperature	• Refill oil • Check, then repair or change • Change the oil
Equipment moves only at low speed	• Faulty pump	• Check, then repair or change

Trouble	Cause	Solution
	• Max. pressure valve setting incorrect, or valves closed due to impurities • Dirty drain filter	• Reset or change • Change
Power system		
Oil pressure warming light remains on even with engine at high speed	• Oil level too low • Oil filter clogged • Oil unsuitable for the ambient environment	• Refill • Change filter • Change
Steam comes out of radiator breather. The engine coolant temperature indicator reaches overheating range	• Coolant fluid level low • Radiator leakage • Fan belt slacked • Mud or limestone accumulated in cooling system • Radiator fins damaged or closed • Faulty thermostat • Radiator cap loosen or broken • Working at too high altitude	• Refill • Repair • Check belt tension and adjust • Change coolant and clean cooling system • Repair or clean • Change • Tighten cap or change unit
Coolant temperature indicator always at the end of right scale	• Faulty instrument	• Change
Coolant temperature indicator always at the end of left scale	• Faulty thermostat • Faulty instrument	• Change • Change
Engine dose not start with starter running	• No fuel • Air in fuel system • Compression defect	• Refuel • Bleed system • Adjust valve clearance
Exhaust gases white or light blue	• Too much oil in oil pan • Unsuitable fuel	• Drain some oil • Change with correct fuel
Exhaust gases occasionally	• Air cleaner clogged	• Clean or change

Trouble	Cause	Solution
tend to be black	• Faulty injectors • Faulty compression	• Change • Adjust valve clearance
Combustion noise occasionally resembles a blow	• Faulty injectors	• Change
Abnormal noises (during combustion or in mechanical parts)	• Fuel with low cetane rating • Overheating • Exhaust silencer inside damaged • Excessive valve clearance	• Change with correct fuel • • Change • Adjust valve clearance
Transmission system		
Machine moves neither forward nor reverse	• Oil level insufficient • Suction filter clogged • Faulty flexible coupler • Max. pressure valves faulty or dirty • Positioning hydraulic connection interrupted • Travel motor faulty	• Refill • Change • Change coupler • Clean or change valves • Restore connection • Repair or change
Machine moves with delay (with abnormal noise)	• Oil level too low • Presence of foam • Suction pipe tightness • Suction filter clogged • Travel motor faulty	• Refill • Use the recommended oil • Check and eliminate leakage • Change • Repair or change
Traction force in the two travel directions is insufficient	• Endothermic engine does not reach max. speed • Auxiliary fuel pump (gear pump) faulty • Max. pressure valve setting incorrect • Connection to servo control faulty or lever angle incorrect • Pressure relief valve setting incorrect	• Change diesel oil filter and check injection pump • Repair or change • Reset • Restore connection or shift lever to correct position • Reset

Trouble	Cause	Solution
	• Excessive oil temperature • Travel motor faulty	• Check oil lever and clean exchanger • Repair or change
Traction force is insufficient in only one direction	• Endothermic engine strongly overloaded • Incorrect setting of the max. pressure valve relevant to that direction	• Reduce loads due to lifting • Set valve
Oil overheating	• Oil level too low • Exchanger clogged or dirty • Unsuitable oil • Suction pipe tightness • Setting and operation of the max. pressure valves • Travel pump faulty • Pressure relief valve with high setting • Travel motor faulty	• Refill oil • Check and change if necessary • Change with correct oil • Check and eliminate leakage • Check setting, repair or change • Repair or change • Set valve • Repair or change
Machine dose not reach max. speed	• Suction filter clogged • Endothermic engine dose not reach max. speed • Auxiliary pump (gear pump) faulty • Pilot pressure insufficient • Pressure relief valve setting incorrect	• Change • Change diesel oil filter and check injection pump • Check, repair or change • Set • Set to rated value
Machine decelerates discontinuously	• Mechanical connection with servo control lever too hard	• Check if rotation is smooth
Machine accelerate slowly	• Engine power drop • Pressure relief valve setting incorrect	• Check clogging of fuel filter, injection pump and valves • Set to rated value
Oil leakage from engine propeller shaft and/or pump	• Sealing rings faulty • Counter pressure in pump casing	• Change • Drain pipes clogged or damaged

Trouble	Cause	Solution
	• By-pass valve setting too high	• Check and restore
Others		
Fuel completely depleted	• Fuel runs out of	• Refuel and bleed the system before start the engine again
Battery completely depleted	• Alternator faulty	• Repair or change
	• Consume electric power when the engine is stopped	• Charge the battery • Or start the engine with booster cables
Machine gets stuck in mud	• Can not get out by itself	• Use a wire rope suitable to remove the machine through the tow hook

6 OPTIONAL EQUIPMENT

NOTICE

- Besides of the standard equipments for SWL series skid steer loader, Sunward also provides optional equipment. Please read the following information carefully before operation and refer to the involved instruction.
- Only use the special or particular optional equipment recommended by Sunward or meeting with the request mentioned in the tables.
- Warranty and responsibility would be void under the condition that the optional equipment is applied without permission by Sunward.

6.1 SECURITY MEASURES

The optional equipment beyond permission by Sunward may reduce the service life of the machine, as well as result in security accident.
Please contact the local agent or distributor prior to installation of the optional equipment which is not mentioned in this manual.
Warranty and responsibility would be void if operations disobey the instruction in this manual.

WARNING

Please comply with the security instruction during installation or disassembly of any optional equipment.

Install or disassemble the optional equipment on stable and flat ground.

Define the information signal and apply it if one or more helpers are required to complete the operation.

For objects with weight over 25kgs, please move it by crane.

Support heavy parts prior to disassembly of the optional equipment and care about its gravity centre during lifting the heavy parts.

Operation of suspension loading would put you and your machine into extreme danger. Promise the safety of the loading by holding it on the supports always.

Make sure the parts are reliable and would not fall down during installation or disassembly of any the optional equipment.

Never stand under the position of loading when it is lifted up by crane.

In case of falling down of the loading, make sure the safety by choosing proper safety position.

Operation of the crane should be carried on by skilled person. Green hand is not allowed to operate crane.

Regarding to more detailed instruction of the optional equipment, please consult with local agent or distributors.

6.2 SECURITY MEASURES FOR INSTALLATION

WARNING

Prolonged working equipment would reduce the stability of the machine.

Be carefully when travelling on slope to avoid rolling over of the machine.

For optional equipment to be installed with the dimension beyond the standard one, pay more attention during moving of the equipment or travelling of the machine.

6.3 PERFORMANCE OF THE OPTIONAL EQUIPMENT

Consult with local agent for choice and installation of the optional equipment.

6.4 REPLACEMENT OF OPTIONAL EQUIPMENT

WARNING

Park machine on flat and stable ground. Put the optional equipment onto ground.

Before leaving machine, stop engine and move the steer handle in each direction to release pressure and engage the safety lever.

Make sure the locking pin of quick coupler connected to the right position of the equipment prior to operation.

Never insert your finger into the holes because accident such as cutting of the finger would be resulted in case of there is movement unexpected or out of control.

A quick coupler is provided with the machine for connection of the bucket or other optional equipment.

Steps for replacement of other optional equipment are identical with the ones of bucket.

Beside of the quick coupler, there are also two coupling rod and one independent hydraulic circuit to control the optional equipment.

The optional equipment is controlled by pedal valve.

Make sure the oil would not flow into connectors of pedal and unconnected pipes when replacing the independent hydraulic circuit or before disassembling the quick coupler.

6.5 CONNECTION OF HYDRAULIC CIRCUIT

Before any operation on the hydraulic circuit, stop engine firstly and engage steer handle in each direction to release the pressure, and lock on the safety rod.

Clean the positions where are polluted immediately.

Make sure the controlling pedal on the position of flow broken, then, connect the quick pipes to connector of hydraulic circuit after the equipment is attached on the quick coupler.

Quick coupling device should comply with standard of ISO8434-3.

Any query about connection of hydraulic circuit, please consult with your local agent.

6.5.1 CONNECTION OF STANDARD HYDRAULIC CIRCUIT

Application of equipment which has hydraulic circuit with oil return to oil tank directly may also be available.

The oil return system is on the left side of boom. The draining circuit of equipment should be connected to the uppermost connector.

Make sure the oil would not flow into connectors of pedal and unconnected pipes when replacing the independent hydraulic circuit or before disassembling the quick coupler.

6.5.2 CONNECTION OF HIGH FLOW HYDRAULIC CIRCUIT (FOR OPTION WITH HIGH FLOW SYSTEM)

Application of equipment which has high flow hydraulic circuit may be available.

The oil return system is on the right side of boom.

Make sure the oil would not flow into connectors of pedal and unconnected pipes when replacing the independent hydraulic circuit or before disassembling the quick coupler.

There is a button to adjust the size of flow positioned on the rear of tool box left to the cabin. See following pictures:

7 OTHER DATA

7.1 ELECTRIC DIAGRAM

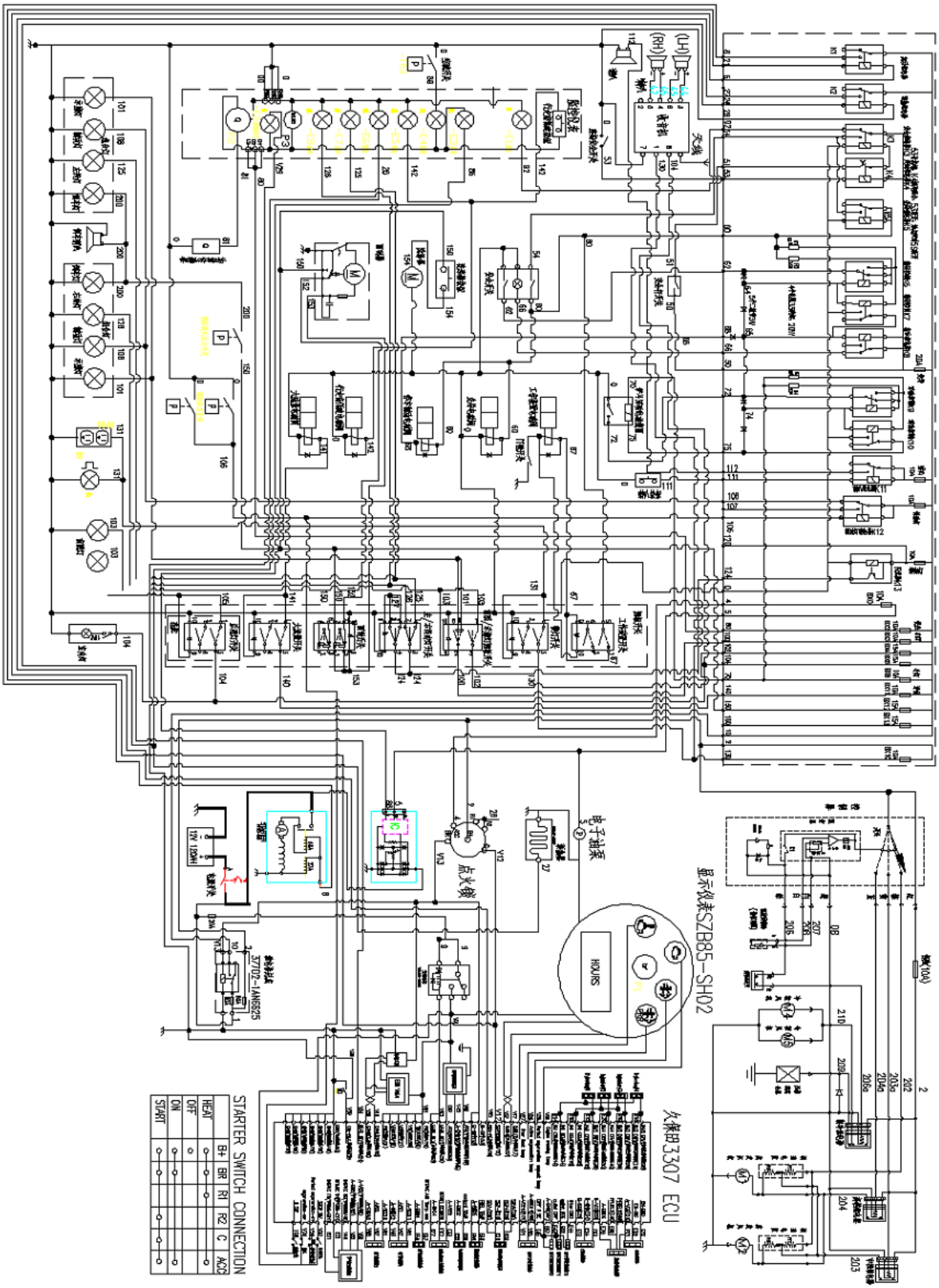

7.2 ELECTRIC ELEMENTS CHART

Code	Name and function	Code	Name and function
BAT	Battery 12V	SA8	Warm air conditioner switch
G	Alternator	SA9	High flow switch
M1	Starter	S0	Enable switch
F00	Main fuse	HL0	Enable switch lamp
F01	Starting fuse	S1	Disconnect switch
F02	Fast pull fuse	S2	Horn switch
F0	Start switch fuse	S3	Boom float switch
F1	Safety switch fuse	S4	Washing switch
F2	Meter fuse	TR1	Water temperature sensor
F3	Clearance light fuse	TR2	Fuel sensor
F4	Head work lamp fuse	TR3	Oil pressure sensor
F5	Rear work lamp fuse	K1	Start relay
F6	Parking brake light fuse	K2	Protect relay
F7	Horn fuse	K3	Fast pull relay
F8	Float valve fuse	K4	Delay relay
F9	Turning light fuse	K5	Safety relay
F10	Beacon lamp fuse	K6	Pilot relay
F11	High flow valve fuse	K7~K8	Invert relay
F12	Warm air conditioner fuse	K9	Brake indication relay
F13	Wiper fuse	K10	Parking lamp relay
M2	Wiper motor	K11	Horn relay
M3	Washing motor	K12	Flasher
M4	Warm air conditioner	K13~K14	Float relay
M01	Fuel pump	HL1	Brake indication lamp
Y0	Fuel Valve	T1	Delay module
Y1	Pilot valve	XP	Maintenance power
Y2	Parking brake	DL1	Reversing horn
Y3	Working device valve	R0	Air heater
Y4	Boom float valve	L6~L7	Head work lamp
Y5	High flow valve	L8~L9	Rear work lamp
EDU	Indicators	L10~L11	Parking brake light
SQ1	Safety-bar switch	L12~L13	Turning light
SQ2	Seat switch	L14	Beacon lamp
SQ3	Door limiting switch	DL	Horn
SP1,SP2	Travel pressure switch	SA0	Start switch
SP3	Brake pressure switch	SA1	Working device switch
SP4	Reversing pressure switch	SA2	Beacon lamp switch
L1~L5	Outline light	SA3	Clearance light /Head work lamp switch

R1~R4	Resistance	SA4	Rear work lamp switch
D1~D7	Diode	SA5	Left Turning Light switch
HL0	Enable switch lamp	SA6	Right Turning Light switch
P1	Water temperature meter	SA7	Wiper switch
P2	Fuel gauge	TR5	Air filter sensor
P3	Hour meter	TR6	Hydraulic oil filter sensor
E1~E8	Alarm lamp		

7.3 HYDRAULIC DIAGRAM

Remark: please refer to related auxiliary operation manuals for auxiliary devices hydraulic drawings.

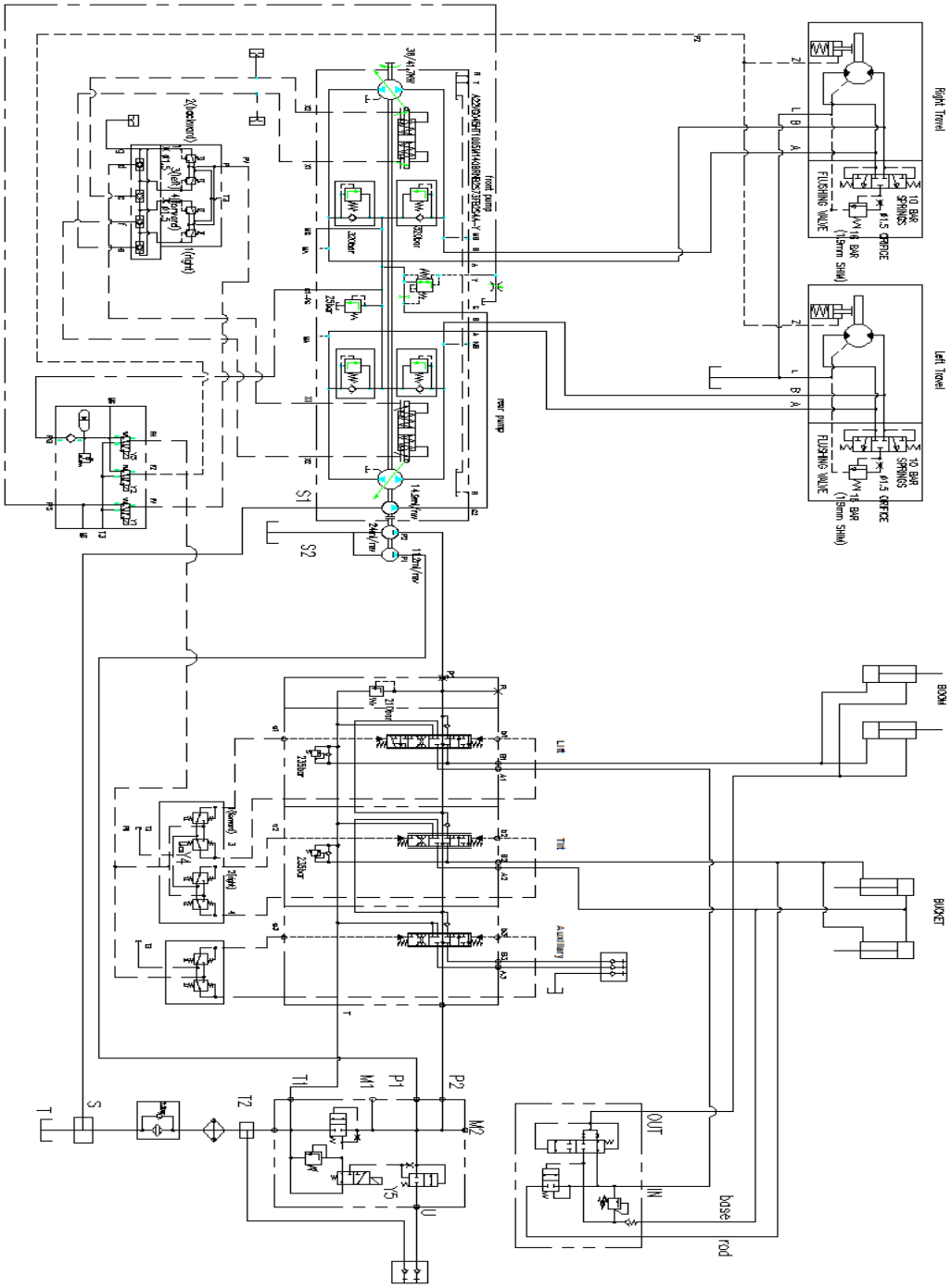

8 INFORMATION OF MANUFACTURER

Company Name: SUNWARD INTELLIGENT EQUIPMENT Co., Ltd.

Brand: SUNWARD

Address: No.16, Lixiang Road (M), Xingsha, Changsha, 410100 Hunan, China

Tel: 0086 731 83572688 83572666

Service point:

Information of Distributors

Information of Distributor	
Name:	
Address:	
Tel:	
Fax:	
Email:	
Contact:	
Remark	