https://truckmanualshub.com/

LM56GC・LM66GC
LM66TC

Walk Behind Greens Mower
Walk Behind Tee Mower

Owner's Operating Manual

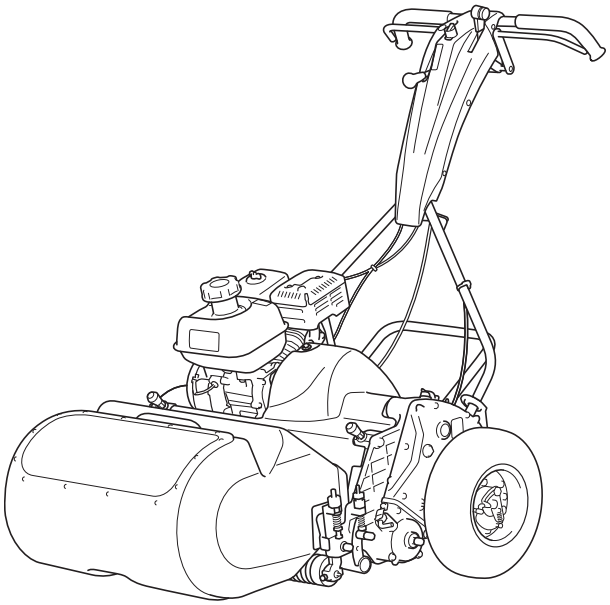

Serial No. LM56GC : 35001- ・LM66GC : 35001-
LM66TC : 35001-

"Required reading"
Read this manual and the Owner's Manual for the engine before using the machine.

BARONESS®
Quality on Demand

Original Instructions Ver.1.0

https://truckmanualshub.com/

Greeting

Thank you for purchasing the Baroness machine.
This manual explains proper handling,
adjustment, and inspection of your machine.
Prior to use, carefully read this manual to
thoroughly understand the contents for safe and
correct operation.
We hope you will use the machine safely, and
take advantage of its best performance.

https://truckmanualshub.com/

Introduction

Read this manual carefully to ensure that you thoroughly understand how to properly operate and maintain this machine, and to avoid causing injury to yourself or others.

The operator is responsible for operating the machine properly and safely.

Do not perform maintenance on the machine other than that described in this manual.

Be sure to also read the Owner's Manual for the engine, battery, etc.

Maintenance should only be performed by a certified specialist.

If you have any questions concerning maintenance or genuine parts, please contact your local Baroness dealer or Kyoeisha.

When making inquiries about this machine, please specify the machine's model designation and serial number.

When loaning or transferring this machine, please also provide this manual together with the machine.

Kyoeisha Co., Ltd.

Caution

The information described in this manual is subject to change for improvement without prior notice.
When replacing parts, be sure to use genuine Baroness parts or parts designated by Kyoeisha.
Note that the Baroness product warranty may not apply to defects caused by the use of parts from other companies.

Warning Symbols

This manual uses the following warning symbols for handling precautions that are important for your safety.

696cq5-001	Warning symbol

This symbol indicates the articles regarding "Danger," "Warning," or "Caution."
Those articles describe important safety precautions and so read them carefully to understand completely before operating the machine.
Failure to adequately follow these safety precautions may cause an accident.

Danger

This symbol indicates that serious injury or death will occur if the warning is ignored.

Warning

This symbol indicates that serious injury or death may occur if the warning is ignored.

Caution

This symbol indicates that injury or damage to property may occur if the warning is ignored.

Important

This symbol indicates precautions on the mechanism of the machine.

https://truckmanualshub.com/

Introduction

Purpose

This machine is intended for cutting turf grass at golf courses.
Do not use this machine in any way other than its intended purpose, and do not modify the machine.
Operating this machine for other purposes and modifying it may be very dangerous and may cause damage to the machine.
In addition, this machine is not authorized for operation as a special motor vehicle. Do not operate it on public roads.

https://truckmanualshub.com/

Contents

Safety ..... Page 1-1

Safe Operating Practices ..... Page 1-2

Disposal ..... Page 2-1

Recycle and Waste Disposal ..... Page 2-2

Product Overview ..... Page 3-1

Specifications ..... Page 3-2
Names of Each Section ..... Page 3-5
Safety Signs and Instruction Signs ..... Page 3-7

Handling Instructions ..... Page 4-1

Preparation for Use ..... Page 4-2
Inspection Before Use ..... Page 4-3
Tightening torques ..... Page 4-8
Adjustment Before Operating ..... Page 4-10
Procedure to Start / Stop Engine ..... Page 4-16
Operation of Each Section ..... Page 4-19
Travel of Machine ..... Page 4-26
Cutting Work ..... Page 4-26
Transporting ..... Page 4-28

Maintenance ..... Page 5-1

Maintenance Precautions ..... Page 5-2
Position of mower during maintenance ..... Page 5-2
Maintenance Schedule ..... Page 5-3
Greasing ..... Page 5-6
Maintenance (Mower) ..... Page 5-8
Maintenance (Main Body) ..... Page 5-21
Long-Term Storage ..... Page 5-23
Troubleshooting Procedures of Aftercut Appearance ..... Page 5-24

https://truckmanualshub.com/

Contents

https://truckmanualshub.com/

Safe Operating Practices ..... Page 1-2

Training .....Page 1-2
Preparation .....Page 1-2
Operation .....Page 1-3
Maintenance and storage .....Page 1-4

https://truckmanualshub.com/

Safety

Failure to adequately follow these safety precautions may cause an accident resulting in injury or death.

Danger

This machine is designed to ensure safe operation and has been tested and inspected thoroughly before shipment from the factory.
The machine is equipped with safety devices to prevent accidents.
However, whether the machine demonstrates its original performance level depends on the manner in which it is operated and handled, as well as the manner in which it is managed on a daily basis.
Inappropriate use or management of the machine may result in injury or death.
Observe the following safety instructions to ensure safe operation.

Safe Operating Practices

Training

1. Read this manual and other training material carefully.
   Be familiar with the controls, safety signs, and the proper use of the equipment.
2. If the operator or mechanic can not read English it is the owner's responsibility to explain this manual to them.
3. All operators and mechanics should seek and obtain professional and practical instruction.
   The owner is responsible for training the users.
4. Never allow people unfamiliar with these instructions to use or service the machine.
   Local regulations may restrict the age of the operator.
5. The owner/user can prevent and is responsible for accidents or injuries occurring to themselves, other people, or property.
6. Keep in mind that the owner, operator, and mechanic are responsible for accidents or hazards occurring to other people or their property.
7. You can find additional safety information where needed throughout this manual.
8. Determine the left and right sides of the machine from the normal operating position.

Preparation

1. Evaluate the terrain to determine what accessories and attachments are needed to properly and safety perform the job.
   Only use accessories and attachments approved by the manufacturer.
2. While operating, always wear substantial footwear, long trousers, hard hat, safety glasses, and ear protection. Long hair, loose clothing, or jewelry may get tangled in moving parts.
   Do not operate the equipment when barefoot or wearing open sandals.
3. Inspect the area where the equipment is to be used and remove all objects such as rocks, toys and wire which can be thrown by the machine.
4. Keep children out of the operating area and under the watchful care of a responsible adult other than the operator.
5. Exercise care in the handling of fuel.

Warning

Warning-Fuel is highly flammable.
Take the following precautions.

[1] Store fuel in containers specifically designed for this purpose.

[2] Add fuel before starting the engine.
Never remove the cap of the fuel tank or add fuel while the engine is running or when the engine is hot.

[3] Refuel outdoors only and do not smoke while refueling.

[4] If fuel is spilled, do not attempt to start the engine but move the machine away from the area of spillage and avoid creating any source of ignition until petrol vapours have dissipated.

[5] Replace all fuel tanks and container caps securely.

6. Check that operator's presence controls, safety switches and shields are attached and functioning properly.
   Do not operate unless they are functioning properly.
7. If the brake operation is faulty or the parking brake lever has noticeable play, be sure to adjust or repair them before operating the machine.
8. Replace faulty mufflers.

https://truckmanualshub.com/

Operation

1. Do not operate the engine in a confined space where dangerous carbon monoxide fumes can collect.
2. Only operate in good light, keeping away from holes and hidden hazards.
3. Before attempting to start the engine, disengage all attachments, shift into neutral, and engage the parking brake.
4. Start the engine or switch on the motor carefully according to this manual and with feet well away from the blade(s).
5. Avoid operating the equipment in wet grass, where feasible.
6. Always be sure of your footing on slopes.
7. Walk, never run.
8. Remember there is no such thing as a safe slope.
   Travel on grass slopes requires particular care.
   To guard against overturning:
   [1] Do not mow excessively steep slopes.
   [2] Do not stop or start suddenly when going up or downhill.
   [3] Engage clutch slowly, always keep machine in gear, especially when traveling downhill.
   [4] Machine speeds should be kept low on slopes and during tight turns.
9. Never operate the machine with damaged guards, shields, or without safety protective devices in place.
   Be sure all interlocks are attached, adjusted and functioning properly.
10. Do not change the engine governor settings or overspeed the engine.
    Operating the engine at excessive speed may increase the hazard of personal injury.
11. Pay attention not to touch hot parts.
12. Do the following before leaving the operator's position.
    [1] Stop on level ground.
    [2] Disengage the cutting unit and traction drive;
    [3] Set the parking brake;
    [4] Stop the engine.
13. Stop the engine in the following conditions.
    [1] Before refueling.
    [2] Before removing the grass catcher/ catchers.
    [3] Before making height adjustment unless adjustment can be made from the operator's position.
    [4] Before cleaning blockages.
    [5] Before checking, cleaning, or working the machine.
    [6] Whenever you leave the machine.
    [7] After striking a foreign object or if an abnormal vibration occurs.
    Inspect the machine for damage and make repairs before restarting and operating the equipment.
14. Keep hands and feet away from the cutting units and the rotating parts.
15. Never pick up or carry a lawnmower while the engine is running.
16. Look behind and down before backing up to be sure of a clear path.
17. Never operate while people, especially children, or pets are nearby.
18. Slow down and use caution when making turns and crossing roads and sidewalks.
19. Stop the blades rotating before crossing surfaces other than grass.
20. Disengage drive to attachments when transporting or not in use.
21. When using any attachments, never direct discharge of material toward bystanders nor allow anyone near the machine while in operation.
22. Do not operate the machine under the influence of alcohol or drugs.
23. Take care when loading or unloading the machine into a trailer or a truck.
    Load or unload the machine in a flat and safe place.
    Before loading or unloading, set the parking brake on the truck or trailer, stop the engine, and chock the wheels.
    When transporting the machine on a truck or a trailer, set the parking brake, stop the engine, and fasten the machine to the truck with a rope or other suitable restraining device that has sufficient strength.
    When using a running board, select one with sufficient strength, length, and width and that will not cause the machine to slip.
24. Close the fuel valve before transporting the machine.

https://truckmanualshub.com/

25. Use care when approaching blind corners, shrubs, trees, or other objects that may obscure vision.
26. Do not take your eyes off the road ahead. Do not operate the machine with no hands.
27. Reduce the throttle setting during engine run-out and, if the engine is provided with a shut-off valve, turn the fuel off at the conclusion of operation.
28. Do not operate the machine when there is the risk of lightning.

Maintenance and storage

1. Disengage drives on level ground, disengage the cutting unit, set parking brake, stop engine and disconnect spark plug wire. Wait for all movement to stop before adjusting, cleaning or repairing.
2. To reduce the fire hazard, keep the engine, silencer/muffler, compartment fuel storage area, cutting unit and drives free of grass, leaves, or excessive grease. Clean up oil or fuel spillage.
3. Allow the engine to cool before storing in any enclosure.
4. Only cover the machine with a sheet after hot parts have sufficiently cooled down.
5. Never store the equipment with fuel in the tank inside a building where fumes may reach an open flame or spark.
6. If the engine is provided with a shut-off valve, shut off valve while storing or transporting.
7. Do not store fuel near flames.
8. Never allow untrained personnel to service machine.
9. Allow the engine/muffler to cool before checking/maintenance.
10. Appropriately manage and correctly use the tools necessary for servicing or adjusting the machine.
11. Use jack stands to support components when required.
12. Carefully release pressure from components with stored energy.
13. Make sure that parts such as wires are not touching each other and that their covers have not come off.
14. Use care when checking the cylinders/reels and bed knives.
    [1] Wear gloves and use caution when servicing them.
    [2] Be careful during adjustment of the machine to prevent entrapment of the fingers between moving blades and fixed parts of the machine.
15. Keep hands and feet away from moving parts.
    If possible, do not make adjustments with the engine running.
16. Keep all parts in good working condition and all hardware tightened.
    Replace all worn or damaged decals.
17. Keep all nuts, bolts and screws tight to be sure the equipment is in safe working condition.
18. Check the grass catcher frequently for wear or deterioration.
19. If the fuel tank has to be drained, do this outdoors.

https://truckmanualshub.com/

Disposal

Recycle and Waste Disposal ..... Page 2-2

About Recycle .....Page 2-2
About the Waste disposal .....Page 2-2

https://truckmanualshub.com/

Disposal

Recycle and Waste Disposal

About Recycle

Recycling battery etc. is recommended for environmental conservation and economical use of resources.
It may be required by local laws.

About the Waste disposal

Make sure that waste generated when servicing or repairing the machine is disposed of in accordance with local regulations.
(e.g. waste oil, antifreeze, rubber products, and wires etc.)

https://truckmanualshub.com/

Specifications ..... Page 3-2

Specifications list ..... Page 3-2
Sound pressure level ..... Page 3-5
Sound power level ..... Page 3-5
Vibration level ..... Page 3-5

Names of Each Section ..... Page 3-5

Serial Number Plate .....Page 3-6
Specification Decal ..... Page 3-6
Noise Emission Decal .....Page 3-6
Year of Manufacture Decal ..... Page 3-6

Safety Signs and Instruction Signs ..... Page 3-7

About Safety Signs and Instruction Signs .....Page 3-7
Positions of Safety Decals and Instruction Decals ..... Page 3-7
Explanation about Safety Decals and Instruction Decals ..... Page 3-8

https://truckmanualshub.com/

Product Overview

Specifications

Specifications list

LM56GC

Model			LM56GC	
Dimensions	Total length	with grass catcher	55.51 in	141 cm
	Total width	without travelling wheel	37.01 in	94 cm
	Total height	Steering handle	41.73 in	106 cm
Weight	Total weight (empty fuel tank)		224.87 lb	102 kg
	Grass catcher *1		7.28 lb	3.3 kg
	Groomer *1		7.94 lb	3.6 kg
	Travelling wheel (for one machine) *1		15.21 lb	6.9 kg
Minimum turning radius			-	
Engine	Model		HONDA GX120	
	Type		Gasoline air-cooled engine (OHV) four-stroke single-cylinder	
	Total displacement		7.20 cu.in.	118 cm^3 (0.118 L)
	Maximum output		2.6 kW (3.5 PS)/3,600 rpm	
Fuel tank capacity			Gasoline 0.53 U.S.gals	Gasoline 2.0 dm^3 (2.0 L)
Fuel consumption			237.57 g/PS・h (rated output)	323 g/kW・h (rated output)
Engine oil capacity			0.15 U.S.gals	0.56 dm^3 (0.56 L)
Operating width (Mowing width)			22 in	55.7 cm
Operating height (Mowing height)			0.118 (0.177) - 1.142 in [0.118 (0.177) - 1.063 in] *2	3.0 (4.5) - 29.0 mm [3.0 (4.5) - 27.0 mm] *2
Blades			11	
Drive	Traveling		Mechanical	
	Mowing		Mechanical	
Speed (HST)			-	
Speed (Mechanical)			2.98 mph (@3,000 rpm)	4.8 km/h (@3,000 rpm)
Efficiency			0.53 acres/hour (2.98 mph x mowing width x 0.8)	2,139 m^2/h (4.8 km/h x mowing width x 0.8)
Maximum inclination for operation			-	
Tire size			4.10/3.50-6	
Tire pneumatic pressure			17.40 psi	120 kPa (1.2 kgf/cm^2)
Battery			-	

The factory default maximum engine rpm is 3,400 rpm.

*1: Total weight includes *1 parts.

*2: The indicated lowest mowing height is for general application. It may be adjusted according to the state of green and the bed knife to be installed.
The value in the brackets [ ] is the mowing height of the machine equipped with a groomer.
The value in the brackets ( ) is the mowing height of the machine equipped with a standard bed knife.

https://truckmanualshub.com/

LM66GC

Model			LM66GC	
Dimensions	Total length	with grass catcher	55.51 in	141 cm
	Total width	without travelling wheel	40.55 in	103 cm
	Total height	Steering handle	41.73 in	106 cm
Weight	Total weight (empty fuel tank)		240.30 lb	109 kg
	Grass catcher *1		7.94 lb	3.6 kg
	Groomer *1		8.82 lb	4.0 kg
	Travelling wheel (for one machine) *1		15.21 lb	6.9 kg
Minimum turning radius			-	
Engine	Model		HONDA GX120	
	Type		Gasoline air-cooled engine (OHV) four-stroke single-cylinder	
	Total displacement		7.20 cu.in.	118 cm^3 (0.118 L)
	Maximum output		2.6 kW (3.5 PS)/3,600 rpm	
Fuel tank capacity			Gasoline 0.53 U.S.gals	Gasoline 2.0 dm^3 (2.0 L)
Fuel consumption			237.57 g/PS・h (rated output)	323 g/kW・h (rated output)
Engine oil capacity			0.15 U.S.gals	0.56 dm^3 (0.56 L)
Operating width (Mowing width)			26 in	64.6 cm
Operating height (Mowing height)			0.118（0.177） - 1.142 in [0.118（0.177） - 1.063 in] *2	3.0（4.5） - 29.0 mm [3.0（4.5） - 27.0 mm] *2
Blades			11	
Drive	Traveling		Mechanical	
	Mowing		Mechanical	
Speed (HST)			-	
Speed (Mechanical)			2.98 mph (@3,000 rpm)	4.8 km/h (@3,000 rpm)
Efficiency			0.61 acres/hour (2.98 mph x mowing width x 0.8)	2,481 m^2/h (4.8 km/h x mowing width x 0.8)
Maximum inclination for operation			-	
Tire size			4.10/3.50-6	
Tire pneumatic pressure			17.40 psi	120 kPa (1.2 kgf/cm^2)
Battery			-	

The factory default maximum engine rpm is 3,400 rpm.

*1: Total weight includes *1 parts.

*2: The indicated lowest mowing height is for general application. It may be adjusted according to the state of green and the bed knife to be installed.
The value in the brackets [ ] is the mowing height of the machine equipped with a groomer.
The value in the brackets ( ) is the mowing height of the machine equipped with a standard bed knife.

https://truckmanualshub.com/

Product Overview

LM66TC

Model			LM66TC	
Dimensions	Total length	with grass catcher	55.51 in	141 cm
	Total width	without travelling wheel	40.55 in	103 cm
	Total height	Steering handle	41.73 in	106 cm
Weight	Total weight (empty fuel tank)		235.89 lb	107 kg
	Grass catcher *1		7.94 lb	3.6 kg
	Groomer *1		8.82 lb	4.0 kg
	Travelling wheel (for one machine) *1		15.21 lb	6.9 kg
Minimum turning radius			-	
Engine	Model		HONDA GX120	
	Type		Gasoline air-cooled engine (OHV) four-stroke single-cylinder	
	Total displacement		7.20 cu.in.	118 cm^3 (0.118 L)
	Maximum output		2.6 kW (3.5 PS)/3,600 rpm	
Fuel tank capacity			Gasoline 0.53 U.S.gals	Gasoline 2.0 dm^3 (2.0 L)
Fuel consumption			237.57 g/PS・h (rated output)	323 g/kW・h (rated output)
Engine oil capacity			0.15 U.S.gals	0.56 dm^3 (0.56 L)
Operating width (Mowing width)			26 in	64.6 cm
Operating height (Mowing height)			0.177 (0.276) - 1.142 in [0.177 (0.276) - 1.063 in] *2	4.5 (7.0) - 29.0 mm [4.5 (7.0) - 27.0 mm] *2
Blades			7	
Drive	Traveling		Mechanical	
	Mowing		Mechanical	
Speed (HST)			-	
Speed (Mechanical)			2.73 mph (@3,000 rpm)	4.4 km/h (@3,000 rpm)
Efficiency			0.56 acres/hour (2.73 mph x mowing width x 0.8)	2,274 m^2/h (4.4 km/h x mowing width x 0.8)
Maximum inclination for operation			-	
Tire size			4.10/3.50-6	
Tire pneumatic pressure			17.40 psi	120 kPa (1.2 kgf/cm^2)
Battery			-	

The factory default maximum engine rpm is 3,400 rpm.

*1: Total weight includes *1 parts.

*2: The indicated lowest mowing height is for general application. It may be adjusted according to the state of green and the bed knife to be installed.
The value in the brackets [ ] is the mowing height of the machine equipped with a groomer.
The value in the brackets ( ) is the mowing height of the machine equipped with a standard bed knife.

https://truckmanualshub.com/

Sound pressure level

LM56

■Sound pressure level

This machine was confirmed to have a continuous A-weighted sound pressure level of 87 dB by measuring identical machines in accordance with the procedure specified in ISO 5395-1:2013.

LM66

■Sound pressure level

This machine was confirmed to have a continuous A-weighted sound pressure level of 87 dB by measuring identical machines in accordance with the procedure specified in ISO 5395-1:2013.

Sound power level

LM56

■Sound power level

This machine was confirmed to have a sound power level of 98 dB by measuring identical machines in accordance with the procedure specified in directive 2000/14/EC.

LM66

■Sound power level

This machine was confirmed to have a sound power level of 98 dB by measuring identical machines in accordance with the procedure specified in directive 2000/14/EC.

Vibration level

LM56

■Hand-arm vibration

This machine was confirmed to transmit a vibration level of 3.07 m/s^2 to hands and arms by measuring identical machines in accordance with the procedure specified in ISO 5349-1:2001,ISO 5349-2:2001.

LM66

■Hand-arm vibration

This machine was confirmed to transmit a vibration level of 2.70 m/s^2 to hands and arms by measuring identical machines in accordance with the procedure specified in ISO 5349-1:2001,ISO 5349-2:2001.

Names of Each Section

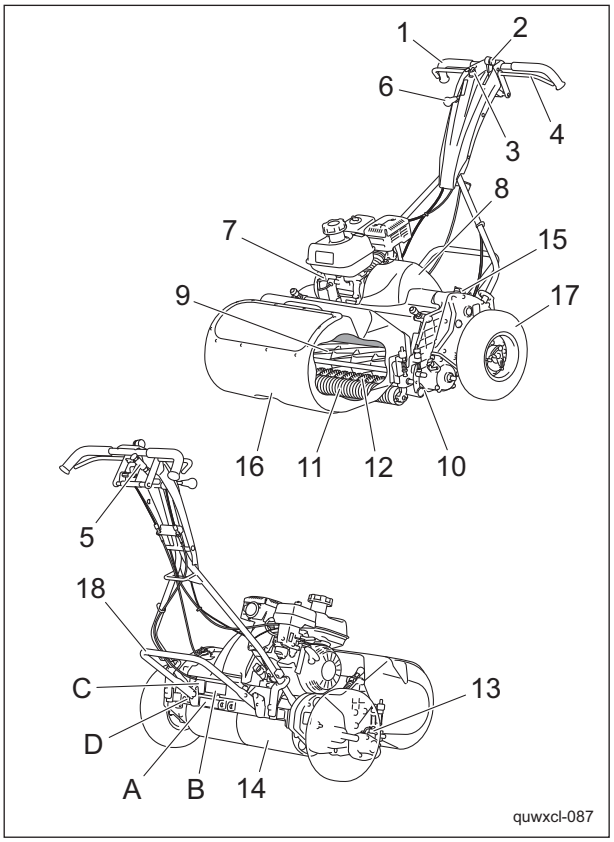

Names of Each Section_001

https://truckmanualshub.com/

Product Overview

1	Handle
2	Throttle lever
3	Engine switch
4	Main clutch lever
5	Safety lock switch
6	Brake lever
7	Engine
8	Engine clutch cover
9	Reel cutter
10	Bed knife
11	Front roller
12	Groomer
13	Groomer clutch lever
14	Drum
15	Traveling/ Working selector lever
16	Grass catcher
17	Traveling tires
18	Stand
A	Serial number plate
B	Specification decal
C	Noise emission decal
D	Year of manufacture decal

Serial Number Plate

The serial number plate indicates the model and serial number of the machine.

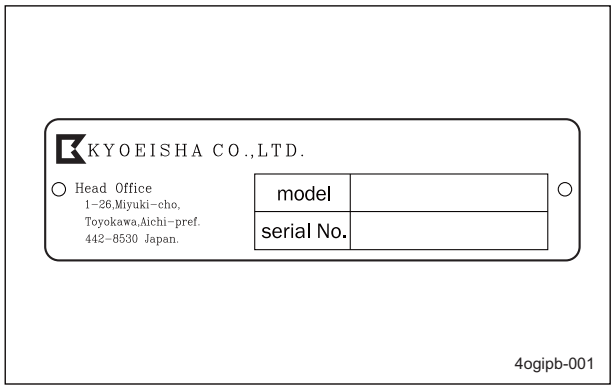

Serial Number Plate_001

Specification Decal

(For Europe)
The Specification decal indicates the CE marking, model , and weight, etc.

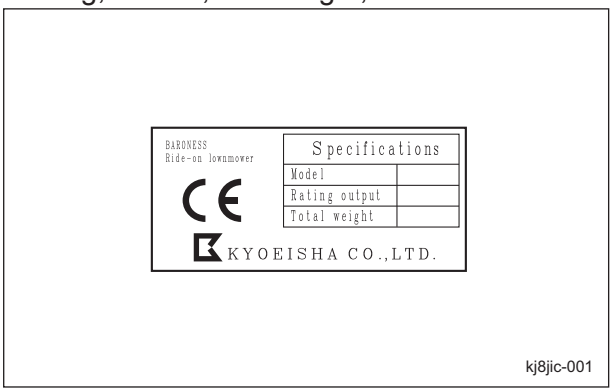

Specification Decal_001

Noise Emission Decal

(For Europe)
The noise emission decal indicates the sound power level determined by measuring identical machines in accordance with the procedure specified in the EC directives.

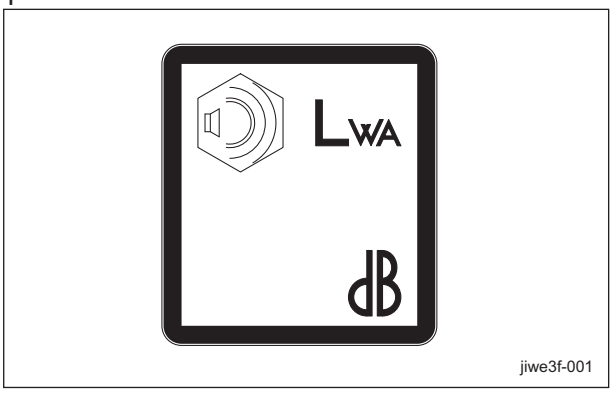

Noise Emission Decal_001

Year of Manufacture Decal

(For Europe)
The year of manufacture decal indicates the year when this machine was manufactured.

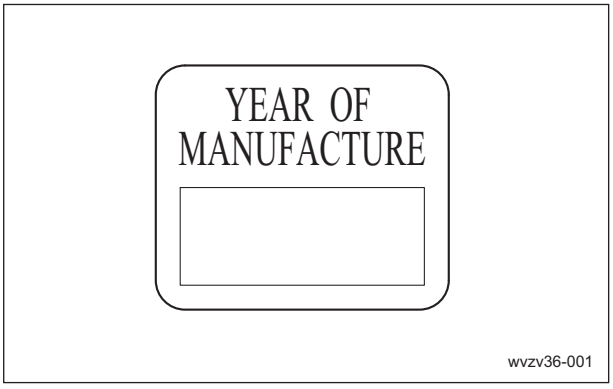

Year of Manufacture Decal_001

https://truckmanualshub.com/

Safety Signs and Instruction Signs

About Safety Signs and Instruction Signs

⚠ Warning

Safety decals and instruction decals are attached to this machine.
Make sure that they are preserved in their entirety. If they are damaged, become dirty, or peel off, replace them with new ones.

Part numbers for decals that need to be replaced are listed in the parts catalog. Order them from a Baroness dealer or Kyoeisha.

Positions of Safety Decals and Instruction Decals

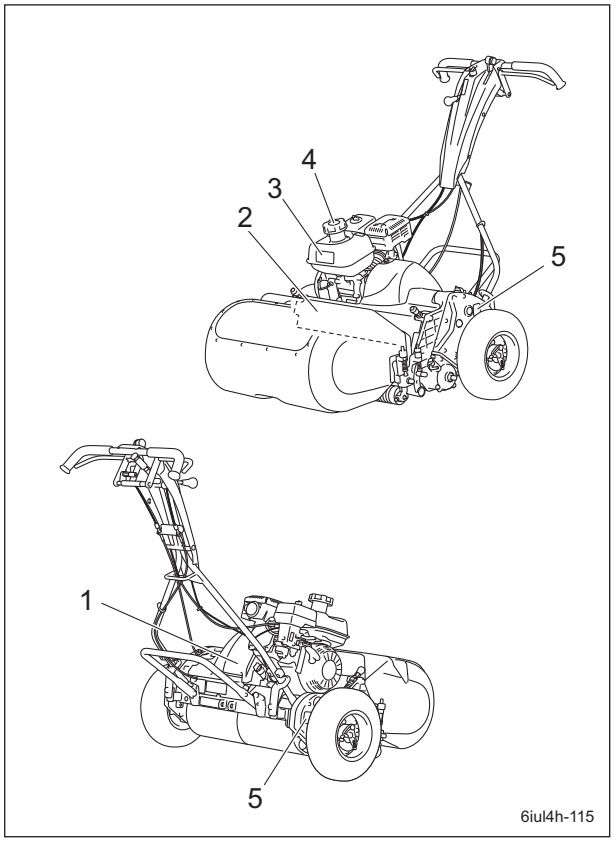

Positions of Safety Decals and Instruction Decals_001

https://truckmanualshub.com/

Product Overview

Explanation about Safety Decals and Instruction Decals

1	K4205001590 DECAL, CAUTION SAFETY INSTRUCTION 1. Use lead-free gasoline. 2. **Warning** Read the Owner's Operating Manual. 3. **Danger** Flying objects - All persons other than the operator must keep a safe distance from the machine. 4. **Danger** May cut your hand or leg - When the blades are rotating, keep away from the machine.	1 2 3 4 qigqnx-118
2	K4205001600 DECAL, CAUTION TO MUTILATION **Danger** May cut your hand or leg - Stop the cutter rotation and engine. Otherwise you may get injured.	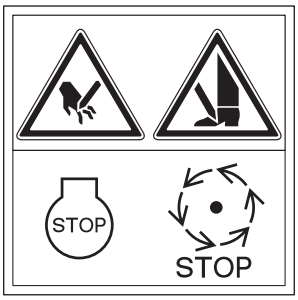 qigqnx-010
3	K4205001330 DECAL, CAUTION TO NOISE	 qigqnx-015

https://truckmanualshub.com/

4	K4205001300 DECAL, WARNING ENGINE OIL Warning Check engine oil and gearbox levels before starting.	 qigqnx-120
5	K4209000370 DECAL, GREASING 10 HR Add grease every 10 hours.	 qigqnx-119

https://truckmanualshub.com/

https://truckmanualshub.com/

Preparation for Use ..... Page 4-2

Install the Handle ..... Page 4-2
Connection of Engine Switch Cord ..... Page 4-2
Installing the Stand ..... Page 4-2
Confirmation of the Operation ..... Page 4-3

Inspection Before Use ..... Page 4-3

Reel Cutter (Cutting Cylinder) and Bed Knife (Bottom Blade) ..... Page 4-3
Cover ..... Page 4-3
Air Cleaner ..... Page 4-4
Roller ..... Page 4-5
Drum ..... Page 4-5
Tire ..... Page 4-5
Brake ..... Page 4-5
Wire ..... Page 4-5
Engine ..... Page 4-5
Engine Oil ..... Page 4-6
Fuel ..... Page 4-7
Oil Leakage ..... Page 4-7

Tightening torques ..... Page 4-8

Standard tightening torques ..... Page 4-8
Principal tightening torques ..... Page 4-9

Adjustment Before Operating ..... Page 4-10

Adjustment of Handle ..... Page 4-10
Adjustment of IGCA (Independent Grass Catcher Arm) ..... Page 4-10
Adjustment of Blade Engagement ..... Page 4-11
Adjustment of Cutting Height ..... Page 4-12
Adjustment of Groomer ..... Page 4-15

Procedure to Start / Stop Engine ..... Page 4-16

Start / Stop of Engine ..... Page 4-16

Operation of Each Section ..... Page 4-19

Precautions for Operating the Machine ..... Page 4-19
Cautions before Leaving the Machine ..... Page 4-19
Description of Operation Decals ..... Page 4-19
Light Switch ..... Page 4-21
Engine Switch ..... Page 4-21
Throttle Lever ..... Page 4-22
Brake Lever ..... Page 4-22
Safety Lock Switch ..... Page 4-22
Main Clutch Lever ..... Page 4-23
Traveling/Working Selector Lever ..... Page 4-23
Air Adjusting Plate ..... Page 4-23
Engine Clutch Cover ..... Page 4-24
Groomer Clutch Lever ..... Page 4-24
IGCA (Independent Grass Catcher Arm) ..... Page 4-24

Travel of Machine ..... Page 4-26

Traveling the Machine ..... Page 4-26

Cutting Work ..... Page 4-26

Cutting Work ..... Page 4-26
Removing/Installing Traveling Tires .... Page 4-27
Removing/Installing Grass Catcher ..... Page 4-28

Transporting ..... Page 4-28

Transporting Procedure ..... Page 4-28

https://truckmanualshub.com/

Preparation for Use

Install the Handle

1. Put the handle pin on the left frame into the hole at the left-side lower edge of the handle.
2. While pressing the right-side lower edge of the handle inward, put the handle pin of the right frame into the hole.
3. Secure the lower edges (slotted section of the handle adjusters) of the right and left sides of the handle to the rear frame stay from the back with the bolts, conical spring washers, and washers.

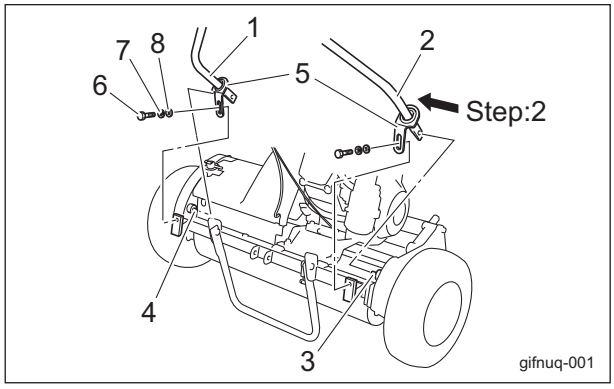

Install the Handle_001

1	Left-side lower edge of handle
2	Right-side lower edge of handle
3	Handle pin (Right frame)
4	Handle pin (Left frame)
5	Handle adjuster
6	Bolt
7	Conical spring washer
8	Washer

Connection of Engine Switch Cord

Warning

When the connection of the engine switch cord is incomplete, the engine will not stop even if the engine switch is operated.
Check that the cord is correctly connected.

When assembling the handle, check the connection of the engine switch cord.
There are two connections - plug and crimp terminal.

1. The plug is connected to the plug connected to the engine.
2. The crimp terminal is secured to the engine crankcase with a hexagon bolt.

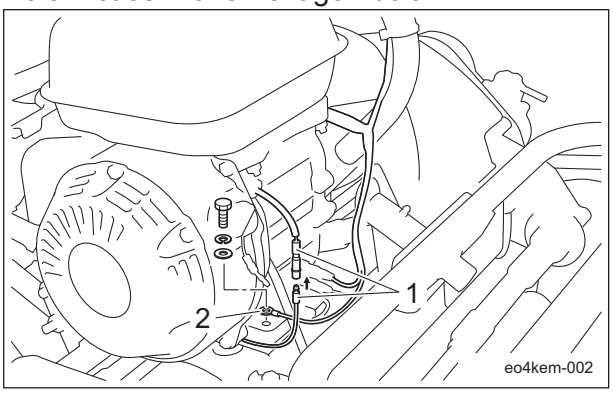

Connection of Engine Switch Cord_001

1	Plug
2	Crimp terminal

Installing the Stand

1. With the inside projection side set to the right, temporarily secure the left side of the stand to the frame with the bolt, washer (inside), and nut (outside).
2. Put the spring on the projection of the frame and the projection at the right edge of the stand.

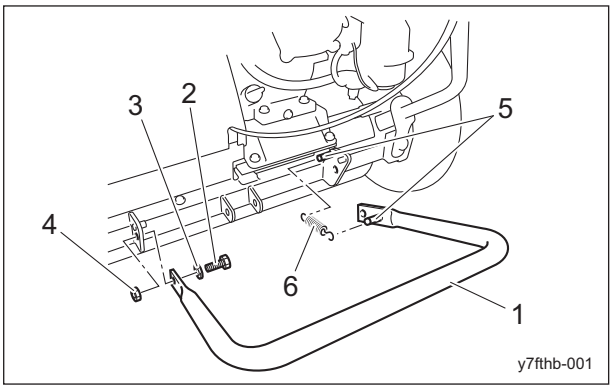

Installing the Stand_001

1	Stand
2	Bolt
3	Washer
4	Nut
5	Projection
6	Spring

3. While pulling the right side of the stand backward, make alignment with the hole in the frame, and secure the stand with the bolt, washer (inside), and nut (outside).

https://truckmanualshub.com/

4. Tighten the bolt, washer, and nut at the left side of the stand that were temporarily secured.

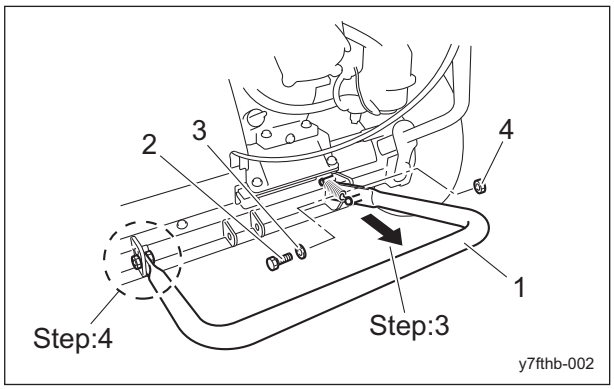

Installing the Stand_002

1	Stand
2	Bolt
3	Washer
4	Nut

Confirmation of the Operation

1. Check that the brake operates completely.
2. Check that the engine clutch operates completely.
3. If necessary, make adjustment.

Inspection Before Use

Be sure to perform an inspection before you start using the machine so that you will be able to take advantage of its optimum performance for a long period of time.

Reel Cutter (Cutting Cylinder) and Bed Knife (Bottom Blade)

Inspection of Reel Cutter (Cutting Cylinder) and Bed Knife (Bottom Blade)

The reel cutter (cutting cylinder) and bed knife (bottom blade) may become dull due to frequent use, objects crushed during mowing, or damage caused during transportation. Inspect the reel cutter (cutting cylinder) and bed knife (bottom blade), and if necessary, adjust the blade engagement, perform back lapping, or resharpen or replace the reel cutter (cutting cylinder) and the bed knife (bottom blade).

1. Check to see whether or not the edge of the reel cutter (cutting cylinder) and the bed knife (bottom blade) are too blunt to cut.
2. Make sure that the reel cutter (cutting cylinder) and the bed knife (bottom blade) are not cracked.
3. Check to see how much the reel cutter (cutting cylinder) and the bed knife (bottom blade) are worn.
4. Make sure that the reel cutter (cutting cylinder) and the bed knife (bottom blade) have not changed color due to heat from grinding.
5. Check to see whether or not the second edge face (relief) remains at the point of reel cutter (cutting cylinder).
6. Make sure that the welding between the reel cutter (cutting cylinder) and the disc has not come off.

Cover

Inspection of Covers

⚠ Caution

If you have removed the covers during inspection, be sure to securely install them in their original positions.
If a cover remains removed, foreign objects may fly off, possibly resulting in injuries.

1. Make sure that there is no wear or deterioration of the reel cover and all other covers.
2. Make sure that there is no damage to the reel cover and all other covers.
3. Make sure that there is no interference with moving parts due to deformation of the reel cover and all other covers.
4. Make sure that the reel cover and all other covers are installed in their appropriate positions.

https://truckmanualshub.com/

Air Cleaner

Inspection of Air Cleaner

For details on handling the engine, please refer to the Engine's Owner's Manual.
The air cleaner is a component that removes dirt from the intake air to prevent wear of the cylinder liners and piston rings so that the engine will always operate smoothly.
A contaminated air cleaner element may cause malfunction of the engine.

1. Make sure that there is no damage to the air cleaner.
2. Make sure that the air cleaner element is not contaminated.

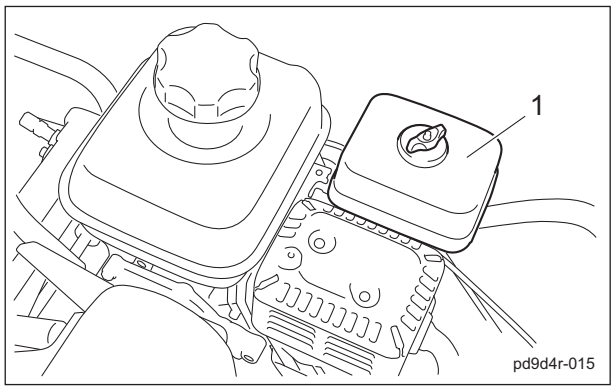

Inspection of Air Cleaner_001

1	Air cleaner

Cleaning of Air Cleaner

For details on handling the engine, please refer to the Engine's Owner's Manual.
A contaminated air cleaner elements may cause malfunction of the engine.
To maximize the life of the engine, clean the air cleaner properly.

1. Remove the wing screw, and then remove the cover.
2. Remove the screw, and then remove the air cleaner elements.
3. Remove the urethane element from the paper element.

⚠ Caution

When cleaning the paper element, do not use petroleum solvents.

Important

Replace the air cleaner elements when it gets damaged or dirty.

4. Clean the urethane element with white kerosene and then soak it in the engine oil and wring out.
5. Remove dirt and dust from the paper element with blowing air or patting.
6. Assemble the paper and urethane elements.
7. Attach the air cleaner elements with the screw.
8. Set the cover, and then secure it firmly with the wing screw.

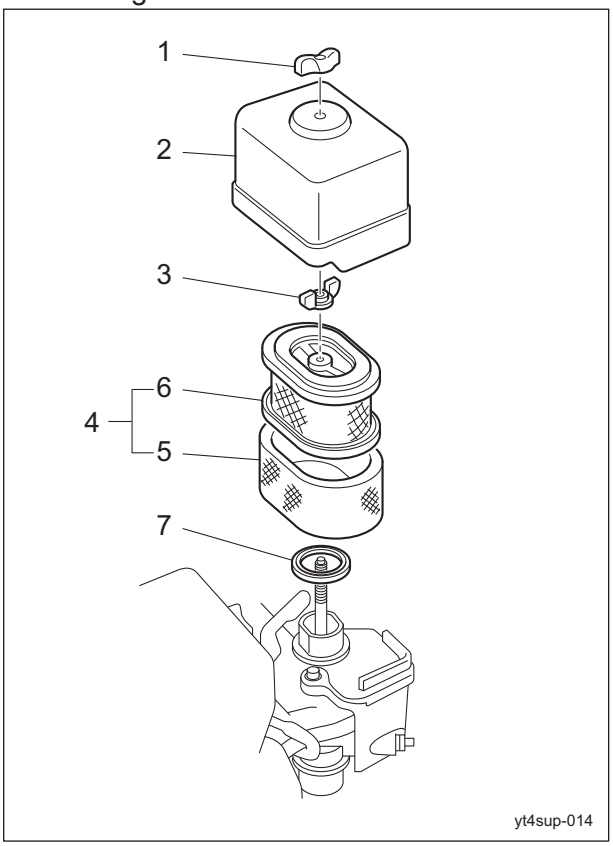

Cleaning of Air Cleaner_001

1	Wing screw
2	Cover
3	Screw
4	Air cleaner element
5	Urethane element
6	Paper element
7	Gasket

https://truckmanualshub.com/

Roller

Inspection of Rollers

Bearing wear due to frequent use or bearing damage caused by water infiltration may prevent the roller from rotating smoothly. Inspect the roller and, if necessary, replace parts such as oil seals and bearings.

1. Make sure that there is no abrasion nor adhesion of the roller.
2. Make sure that there is no wear of the roller shaft.
3. Make sure that there is no wear nor damage of the oil seal.
4. Make sure that there is no wear nor rust of the bearing.
5. Make sure that there is no play in the roller shaft.

Drum

Inspection of Drum

1. Make sure that the drum is not cracked or damaged.
2. Make sure that there is no abrasion or adhesion of the drum.
3. Make sure that there is no play in the fit of the drum and the bearing.

Tire

Inspection of Tires

1. Check the pneumatic pressure of the tires.
2. Make sure that there are no cracks, damage or abnormal wear.

	Tire size	Pneumatic pressure
Tire for traveling	4.10/3.50-6	120 kPa (1.2 kgf/cm^2)

Brake

Inspection of Brake

Danger

Make sure that the brake wire is not cracked or damaged.
If the wire is cracked or damaged, replace it with a new one immediately.

Caution

Park the machine on a flat place.
Do not park the machine on a slope.

1. Pull up the brake lever and make sure that the brake can operate completely.
2. Pull the brake lever up to the top and make sure that it can lock the brake lever.
3. Make sure that the brake is not applied even slightly after releasing the brake lever.

Wire

Inspection of Wire

1. Make sure that the wire is not cracked or damaged.
2. If the wire is cracked or damaged, replace it with a new one immediately.

Engine

Inspection of Engine-Associated Parts

For details on handling the engine, please refer to the Engine's Owner's Manual.

1. Check the fuel system parts for loosened or cracked joints and leakage. Replace the parts if necessary.
2. Blow compressed air to clean any grass or flammable materials that may be attached on or around the muffler.

https://truckmanualshub.com/

Engine Oil

Inspection of Engine Oil

For details on handling the engine, please refer to the Engine's Owner's Manual.

> **Important**
>
> Screw the oil level gauge firmly.

1. Stop the engine, wait for 10 to 20 minutes for the engine to cool down, and then check the oil level.
2. Position the machine so that the engine will be level, then check the engine oil level without screwing the oil level gauge into the oil filling port.

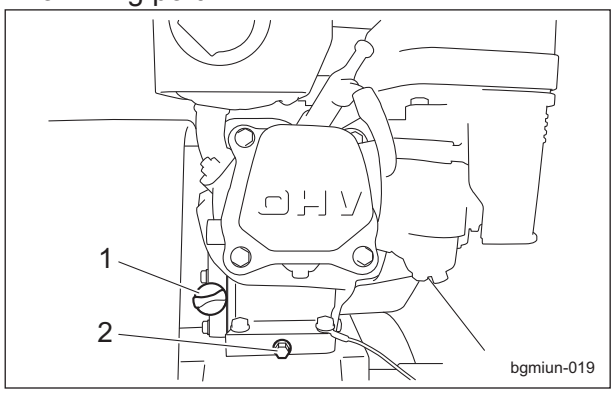

Inspection of Engine Oil_001

1	Oil level gauge (Oil filling port)
2	Drain plug

3. The appropriate engine oil level should be between the upper and lower limit lines on the gauge.

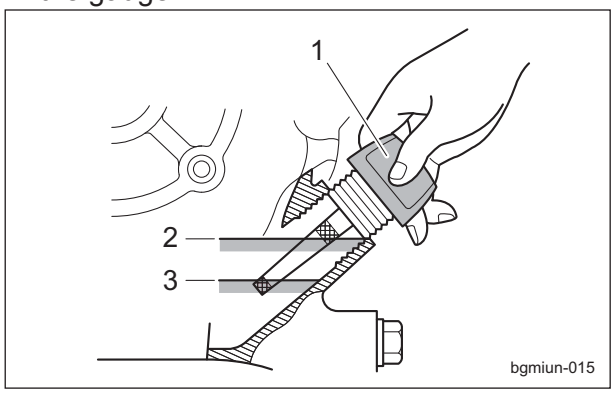

Inspection of Engine Oil_002

1	Oil level gauge
2	Upper limit
3	Lower limit

4. Screw the oil level gauge firmly.

Supply of Engine Oil

For details on handling the engine, please refer to the Engine's Owner's Manual.

> **Important**
>
> Do not supply too much engine oil. Otherwise, the engine may be damaged.

> **Important**
>
> Do not mix different types of engine oil.

> **Important**
>
> Be sure to use engine oil that is classified as API Service Grade SE or higher, with an SAE Viscosity that is appropriate for the operating environment (ambient temperature).

> **Important**
>
> Screw the oil level gauge firmly.

1. Remove the oil level gauge.
2. Through the oil filling port, supply new engine oil until the engine oil reaches a level in the upper limit lines on the oil level gauge.
3. Position the machine so that the engine will be level, then check the engine oil level without screwing the oil level gauge into the oil filling port.
4. Screw the oil level gauge firmly.

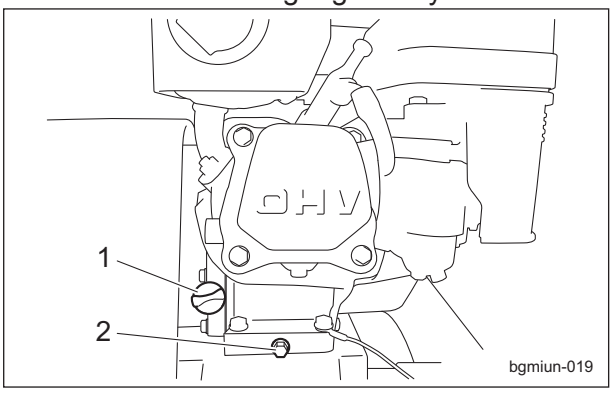

Supply of Engine Oil_001

1	Oil level gauge (Oil filling port)
2	Drain plug

https://truckmanualshub.com/

Fuel

Inspection of Fuel Quantity

Level the machine and then remove the tank cap to inspect fuel quantity from the fill port.

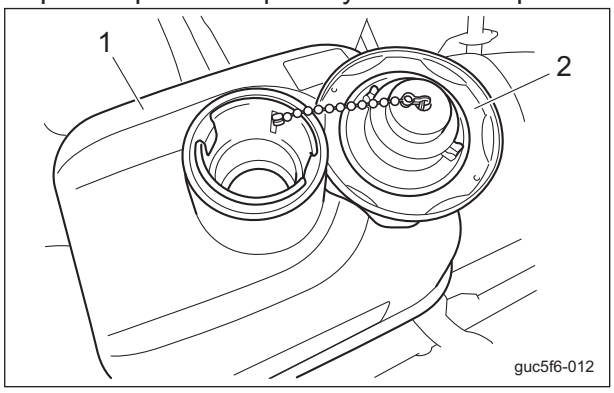

Inspection of Fuel Quantity_001

1	Tank cap
2	Fuel tank

Fuel Supply

Danger

Do not supply fuel above FULL level of the fuel gauge.
If you supply too much fuel, it might overflow from the fuel cap when you travel or work on a slope.

Warning

Keep fire away while refueling.
Do not smoke while refueling.

Warning

Supply fuel after the engine is stopped and has well cooled down.

Caution

Pay attention not to touch hot parts.

Inspect the fuel quantity and put fuel (gasoline) if insufficient.
The fuel tank capacity is approximately 2.0 dm^3 (2.0 L).

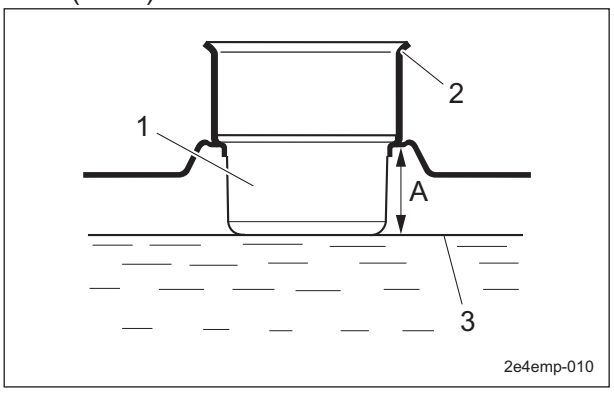

Fuel Supply_001

1	Fuel strainer
2	Filling opening
3	Maximum limit of fueling
A	2.5 cm (0.98 in)

Oil Leakage

Inspection of Oil Leakage

After approximately 50 hours of operation, some joints may be loosened and oil and grease may leak.
Be sure to retighten the parts.
Check the bottom of the machine for oil and grease leakage.

https://truckmanualshub.com/

Tightening torques

Standard tightening torques

Bolts and Nuts

> **Important**
>
> A number of bolts are used in each part of this machine.
> Be sure to re-tighten the bolts and nuts, because they may be loosened at the earlier stage of the use.

As to the bolts and nuts without any special instruction, tighten them in appropriate tightening torque with proper tool.
Too much tightening may cause the looseness or damage of the screw.
The strength of tightening is determined by types of screws, strength, the friction of thread face or base face and others.
The table below is for the galvanized or parkerized bolts.
In case that the strength of internal thread is weak, it is not applied.
Do not use rusty or sand attached "screw."
Otherwise, it may cause insufficient tightening even if you apply the specified tightening torque.
The friction of the screw face becomes higher and the tightening torque is canceled out by the friction, therefore sufficient tightening cannot be applied.
If "screw" is wet by water or oil, do not tighten it with normal tightening torque.
If the screw is wet, the torque coefficient will get smaller and it may result in too much tightening.
Too much tightening may cause looseness by the screw stretched or result in damage.
Do not use a bolt experienced too much burden.
Using the impact wrench requires the skill.
Do exercise as much as possible for steady tightening.

Nominal diameter	General bolt		
	Strength classification 4.8		
	tib3yb-001		
	N-m	kgf-cm	lb-in
M5	3 - 5	30.59 - 50.99	26.55 - 44.26
M6	7 - 9	71.38 - 91.77	61.96 - 79.66
M8	14 - 19	142.76 - 193.74	123.91 - 168.17
M10	29 - 38	295.71 - 387.49	256.68 - 336.34
M12	52 - 67	530.24 - 683.20	460.25 - 593.02
M14	70 - 94	713.79 - 958.52	619.57 - 831.99
M16	88 - 112	897.34 - 1142.06	778.89 - 991.31
M18	116 - 144	1,182.85 - 1,468.37	1,026.72 - 1,274.54
M20	147 - 183	1,498.96 - 1,866.05	1,301.10 - 1,619.73
M22	295	3,008.12	2,611.05
M24	370	3,772.89	3,274.87
M27	550	5,608.35	4,868.05
M30	740	7,545.78	6,549.74

https://truckmanualshub.com/

Nominal diameter	Heat-treated bolt					
	Strength classification 8.8			Strength classification 10.9		
	tib3yb-002			tib3yb-003		
	N-m	kgf-cm	lb-in	N-m	kgf-cm	lb-in
M5	5 - 7	50.99 - 71.38	44.26 - 61.96	7 - 10	71.38 - 101.97	61.96 - 88.51
M6	8 - 11	81.58 - 112.17	70.81 - 97.36	14 - 18	142.76 - 183.55	123.91 - 159.32
M8	23 - 29	234.53 - 295.71	203.57 - 256.68	28 - 38	285.52 - 387.49	247.83 - 336.34
M10	45 - 57	458.87 - 581.23	398.30 - 504.51	58 - 76	591.43 - 774.97	513.36 - 672.68
M12	67 - 85	683.20 - 866.75	593.02 - 752.34	104 - 134	1,060.49 - 1,366.40	920.50 - 1186.03
M14	106 - 134	1,080.88 - 1,366.40	938.21 - 1,186.03	140 - 188	1,427.58 - 1,917.04	1,239.14 - 1,663.99
M16	152 - 188	1,549.94 - 1,917.04	1,345.35 - 1,663.99	210 - 260	2,141.37 - 2,651.22	1,858.71 - 2,301.26
M18	200 - 240	2,039.40 - 2,447.28	1,770.20 - 2,124.24	280 - 340	2,855.16 - 3,466.98	2,478.28 - 3,009.34
M20	245 - 295	2,498.27 - 3,008.12	2,168.50 - 2,611.05	370 - 450	3,772.89 - 4,588.65	3,274.87 - 3,982.95
M22	-	-	-	530	5,404.41	4,691.03
M24	-	-	-	670	6,831.99	5,930.17
M27	-	-	-	1,000	10,197.00	8,851.00
M30	-	-	-	1,340	14,628.78	11,860.34

Note:
The same values are applied to "fine screw thread."

Principal tightening torques

Tightening Torque by Model

LM18GC/LM56GC/LM66GC/LM66TC
Tighten the following bolts and nuts at the torque specified in the table.
For thread locking adhesive, apply a middle strength thread locker (ThreeBond 1322 or equivalent anaerobic sealant).

Location	Code	Part name	Tightening torque			Thread locking adhesive
			N-m	kgf-cm	lb-in	
Bedknife	K0071000222	SCREW, HT FLAT HEAD M6-12	7 - 9	71.38 - 91.77	61.96 - 79.66	-
Reel shaft	K0185160002	NUT, LEFT-HANDED P1.5 M16-3	36	367.09	318.64	-
Reel shaft (Groomer model)	LM56G--1204Z0	GEAR, 20-TEETH	36	367.09	318.64	-
Front roller	K6083000042	PIN, STEPPED M15-19	29 - 38	295.71 - 387.49	256.68 - 336.34	-
Drum wheel	K001A080251	BOLT, WITH HEX. HOLE M8-25	To keep the fitting from coming off			-
Handle	K0010100252	BOLT, HT M10-25	29 - 38	295.71 - 387.49	256.68 - 336.34	-
Groomer	K0160000602	NUT, SPECIAL P1 M17 WITH M4	5 - 10	50.99 - 101.97	44.26 - 88.51	-
	K6083000143	PIN, STEPPED FOR FIXING (R) CASE	6	61.18	53.11	-

https://truckmanualshub.com/

Adjustment Before Operating

Adjustment of Handle

The height of the handle can be adjusted according to the Operator's working position. Move the handle adjusters supporting the handle up or down and fix them with the bolts.

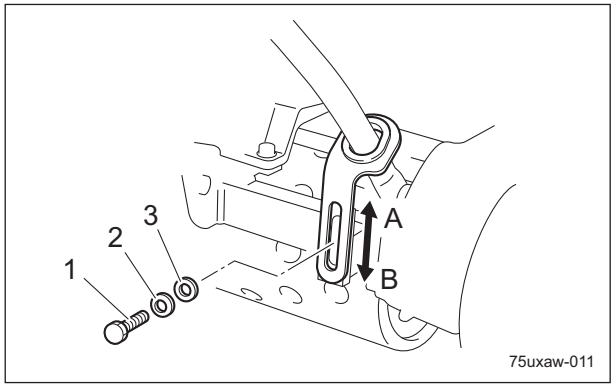

Adjustment of Handle_001

1	Bolt
2	Conical spring washer
3	Washer
A	High
B	Low

Adjustment of IGCA (Independent Grass Catcher Arm)

Note:
Depending on the specifications, this function may not be available.

> **Important**
>
> When adjusting the height of handle, adjust IGCA.

1. Remove the traveling tires.
2. Flip up the stand.
3. Install the grass catcher.
   Adjustment of the link rod:

> **Important**
>
> Adjust the handle pipe so that it can locate at the center of the handle guide.

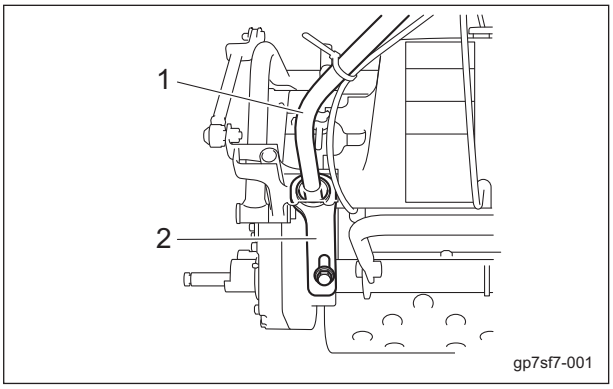

Adjustment of IGCA (Independent Grass Catcher Arm)_001

1	Handle pipe
2	Handle guide

> **Important**
>
> Adjust the right and left link rods so that they will be as long as each other.

1. Remove the snap pin and washer and then remove the flat head pin.
2. Loosen the nut A and turn the L-shape bracket to adjust the length of the link rod.
   When raising the handle, shorten the link rod.
   When lowering the handle, lengthen the link rod.
3. Attach the flat head pin, washer and snap pin to the forefront of slotted hole of the L-shape bracket.
4. Make sure that the handle pipe locates at the center of the handle guide.
5. Tighten the nut A.

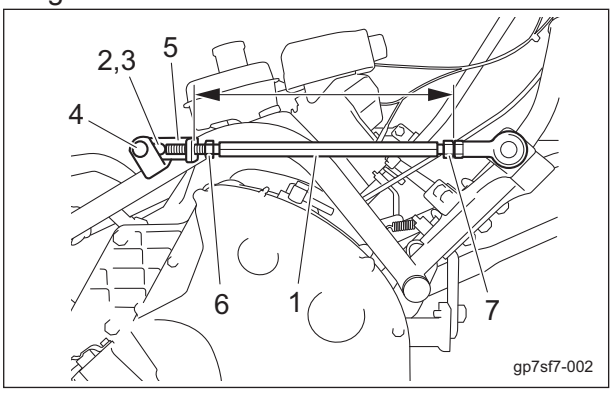

Adjustment of IGCA (Independent Grass Catcher Arm)_002

https://truckmanualshub.com/

1	Link rod
2	Snap pin
3	Washer
4	Flat head pin
5	L-shape bracket
6	Nut A
7	Nut B

6. Repeat the same process for adjustment of the opposite link rod.

Adjustment of gap for the grass catcher:

> **Important**
>
> Adjust so that the grass catcher will not overlap with the stay.

> **Important**
>
> Adjust so that the small gap between the grass catcher and the stay will be even.

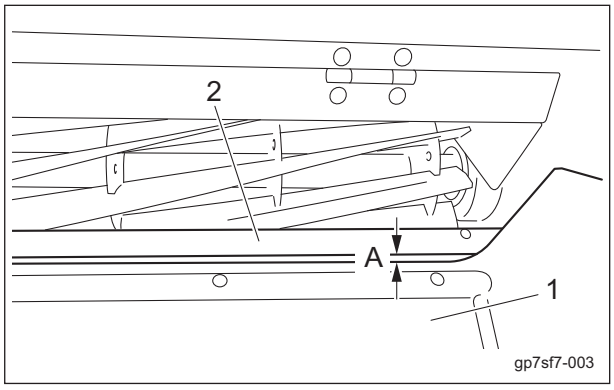

Adjustment of IGCA (Independent Grass Catcher Arm)_003

1	Grass catcher
2	Stay
A	Gap

1. Loosen the right and left locknuts.
2. Remove the right and left clip pin.

> **Important**
>
> The shaft has a through-hole into which the clip pin will be inserted.
> To adjust length always turn the shaft 180 degrees to keep holes aligned.

3. Turn the right and left shafts to adjust so that the gap between the grass catcher and the stay will be 1.0 mm (0.039 in).
4. Tighten the right and left locknuts.

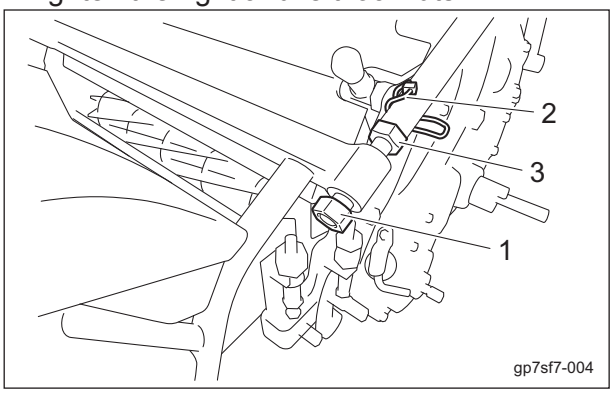

Adjustment of IGCA (Independent Grass Catcher Arm)_004

1	Locknut
2	Clip pin
3	Shaft

Adjustment of Blade Engagement

> **⚠ Caution**
>
> When handling the reel cutter (cutting cylinder) or bed knife (bottom blade), wear gloves to protect your hands.
> Pay attention not to let the reel cutter (cutting cylinder) catch your gloves. Otherwise, you may injure your hand or fingers.

1. Stop the engine.
2. Set the traveling/working selector lever to the "Travel OFF" position.

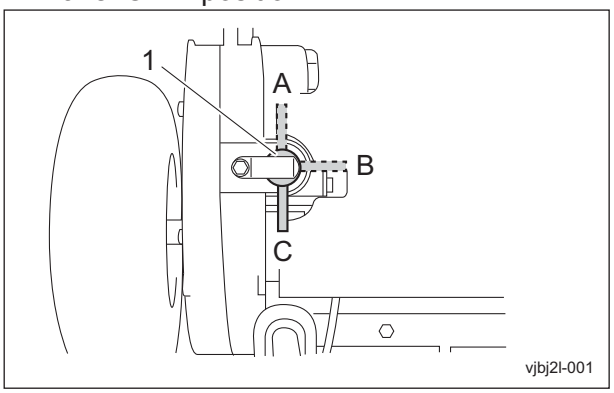

Adjustment of Blade Engagement_001

1	Traveling/Working selector lever
A	Reel ON
B	Travel ON
C	Travel OFF

https://truckmanualshub.com/

3. With the cutter adjustment nut, adjust the engagement between the reel cutter (cutting cylinder) and the bed knife (bottom blade) so that newspaper (one sheet) will be cleanly cut by the edge of both blades when the blades in their entirety come slightly into contact with each other.
4. Insert a strip of newspaper into the space between the reel cutter (cutting cylinder) and the bed knife (bottom blade) at an angle of 90 degrees. Then, rotate the reel cutter (cutting cylinder) counter-clockwise (when you face the mower unit from the left) to check the sharpness of the blades.
   Check the sharpness of the entire range (at three or four points between the left and right ends) of the reel cutter (cutting cylinder).
   - If there is a gap between the blade edges:
     Loosen (rotate counter-clockwise) the cutter adjustment nut to apply more contact pressure between the reel cutter (cutting cylinder) and the bed knife (bottom blade).
   - If the reel cutter (cutting cylinder) is too tight to turn:
     Tighten (rotate clockwise) the cutter adjustment nut to reduce the contact pressure between the reel cutter (cutting cylinder) and the bed knife (bottom blade).
   - If the blades still cannot cut well:
     Perform back lapping of the reel cutter (cutting cylinder).

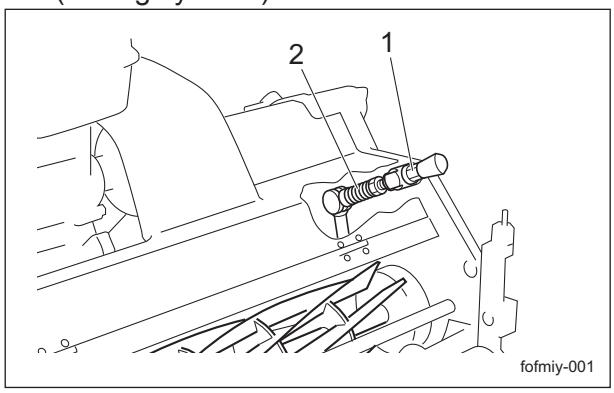

Adjustment of Blade Engagement_002

1	Cutter adjustment nut
2	Spring

Adjustment of Cutting Height

Adjust the cutting height to fit your cutting work.

> **Important**
> This applies the set cutting height that differs from the actual cutting height.

Cutting Height and Blade Thickness of Bed Knife (Bottom Blade)

> **Important**
> The recommended minimum cutting heights are based on those of common greens.
> These values are affected by the conditions of the greens and the machine specifications.
> If the green undulation is hard, set it a little bit higher in order not to damage the green surface.

The recommended minimum cutting height according to the blade thickness of the bed knife (bottom blade) is as indicated below.

https://truckmanualshub.com/

Type	Blade type	Thickness of blade (mm/inch)	Rough minimum cutting height (mm/inch)	Code	Part name	Remarks	
LM56GC	Standard blade	1.5/0.059	3.0/0.118	K2511000270	1.5 Bed knife 55G		
				K2511000390	1.5 Bed knife 55G-47	Offset 5 mm	
		2.0/0.079	3.5/0.138	K2511000280	2 Bed knife 55G		
				K2511000350	2 Bed knife 55G-47	Offset 5 mm	
		2.5/0.098	4.0/0.157	K2511000050	2.5 Bed knife 55G		
				K2511000240	2.5 Bed knife 55G-47	Offset 5 mm	
	High-speed-steel-tipped blade	3.0/0.118	4.5/0.177	K2510000060	3 Bed knife 62.5-559		Standard equipment
		5.0/0.197	7.0/0.276	K2510000160	5 Bed knife 62.5-559		
LM66GC	Standard blade	1.5/0.059	3.0/0.118	K2511000310	1.5 Bed knife 65G		
				K2511000400	1.5 Bed knife 65G-47	Offset 5 mm	
		2.0/0.079	3.5/0.138	K2511000300	2 Bed knife 65G		
				K2511000360	2 Bed knife 65G-47	Offset 5 mm	
		2.5/0.098	4.0/0.157	K2511000200	2.5 Bed knife 65G		
				K2511000250	2.5 Bed knife 65G-47	Offset 5 mm	
	High-speed-steel-tipped blade	3.0/0.118	4.5/0.177	K2510000150	3 Bed knife 62.5-648.4		Standard equipment
		5.0/0.197	7.0/0.276	K2510000170	5 Bed knife 62.5-648.4		
LM66TC	High-speed-steel-tipped blade	3.0/0.118	4.5/0.177	K2510000150	3 Bed knife 62.5-648.4		
		5.0/0.197	7.0/0.276	K2510000170	5 Bed knife 62.5-648.4		Standard equipment

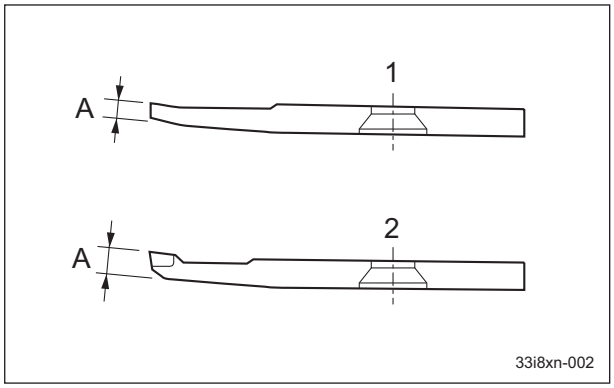

Cutting Height and Blade Thickness of Bed Knife (Bottom Blade)_001

1	Standard blade
2	High-speed-steel-tipped blade
A	Thickness of blade

https://truckmanualshub.com/

Adjustment of Front Roller

You can adjust the cutting height by moving the front roller up or down.
The cutting height can be adjusted to the maximum of 14.0 mm on a greens mower or the maximum of 29.0 mm on a tee mower.
By using the optional bed knife (bottom blade), it is possible to cut to 3.0 mm on a greens mower or 4.5 mm on a tee mower.

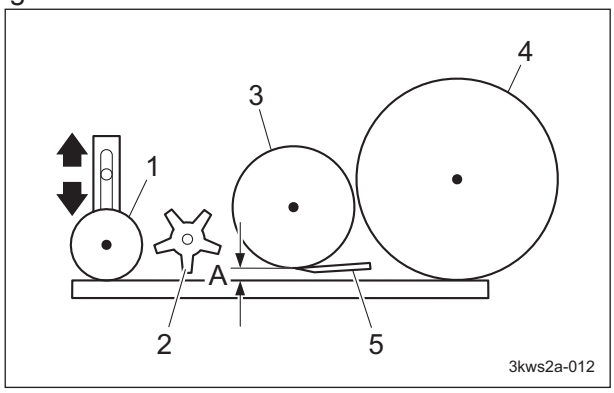

Adjustment of Front Roller_001

1	Front roller
2	Front groomer
3	Reel cutter (Cutting cylinder)
4	Drum
5	Bed knife (bottom blade)
A	Cutting height

1. Set the slide caliper to the required cutting height, adjust the position of the bottom of the head of the small screw for cutting height in the cutting height gauge, and then securely lock it with a fly nut.
2. Loosen the nut securing the roller adjuster.

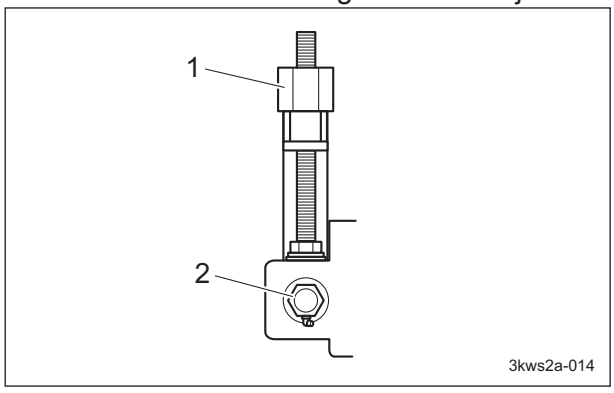

Adjustment of Front Roller_002

1	Roller adjuster
2	Nut

3. Position the cutting height gauge against the front roller and drum at the edge on the left and right sides of the mower unit.
4. Move the front roller up or down with the roller adjuster to position the front roller so that there is no gap between the bottom of the head of the small screw for cutting height in the cutting height gauge and the edge of the bed knife (bottom blade).

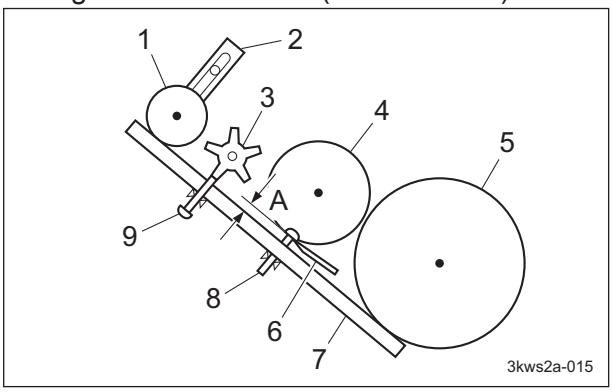

Adjustment of Front Roller_003

1	Front roller
2	Roller bracket
3	Front groomer
4	Reel cutter (Cutting cylinder)
5	Drum
6	Bed knife (bottom blade)
7	Cutting height gauge
8	Small screw for cutting height
9	Small screw for groomer
A	Cutting height

5. Follow the same steps to adjust the cutting height on the opposite side.
6. Tighten the nuts that secure the left and right roller brackets to secure them firmly.
7. Again, make sure that the cutting height is at the required position by positioning the cutting height gauge against the front roller and drum at the edge on the left and right sides of the mower unit.

https://truckmanualshub.com/

Adjustment of Groomer

Note:
Depending on the specifications, this function may not be available.

Important

If the front groomer is being used, adjust it according to the conditions of the greens.

Important

Set the grooming height more than 0.0 mm from the ground.
Allowing the front groomer to go into the ground may damage the groomer shaft.

Important

If the front groomer goes in too deep, the engine and drive components may become overloaded, which may cause malfunction and damage.

Important

When using the grooming brush, adjust it to the same height as the cutting height.
If the grooming brush is too low, it may quickly become damaged.

1. Set the slide caliper to the required cutting height, adjust the position of the bottom of the head of the small screw for groomer in the cutting height gauge, and then securely lock it with a fly nut.

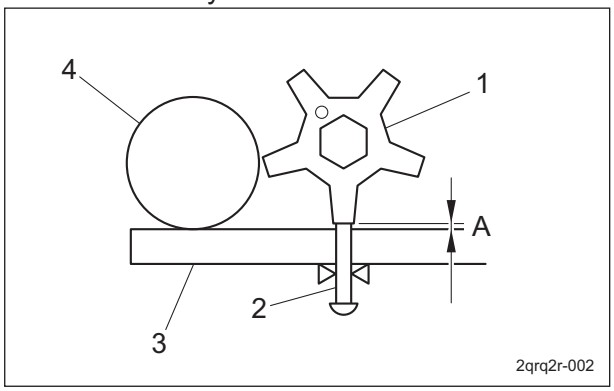

Adjustment of Groomer_001

1	Dethatching blade
2	Small screw for groomer
3	Cutting height gauge
4	Front roller
A	Operating height

2. Loosen the nuts securing the left and right groomer adjustment screws.
3. Loosen left and right special nut A.

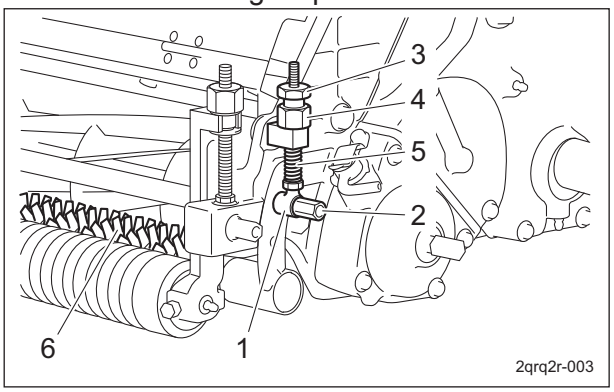

Adjustment of Groomer_002

1	Groomer adjustment screw
2	Nut
3	Special nut A
4	Special nut B
5	Spring
6	Front groomer

4. Position the cutting height gauge against the front roller and drum at the edge on the left and right sides of the mower unit.

Important

Adjust so that the small screw for groomer contacts the dethatching blades.

5. Adjust special nut B up or down so that the left and right sides are parallel.

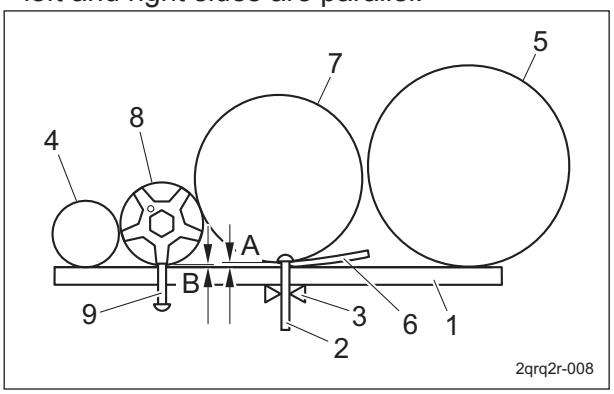

Adjustment of Groomer_003

https://truckmanualshub.com/

1	Cutting height gauge
2	Small screw for cutting height
3	Fly nut
4	Front roller
5	Drum
6	Bed knife (bottom blade)
7	Reel cutter (Cutting cylinder)
8	Dethatching blade
9	Small screw for groomer
A	Cutting height
B	Groomer operating height

6. Follow the same steps to adjust the groomer operating height on the opposite side.
7. Firmly tighten the nuts that secure the left and right groomer adjustment screws.
8. Tighten left and right special nut A.
9. Again, make sure that the groomer operating height is at the required position by positioning the cutting height gauge against the front roller and drum at the edge on the left and right sides of the mower unit.

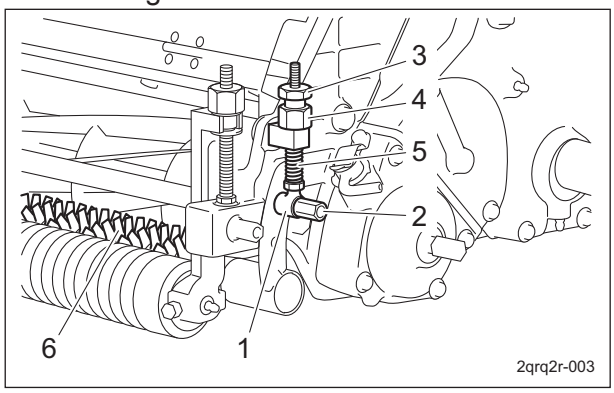

Adjustment of Groomer_004

1	Groomer adjustment screw
2	Nut
3	Special nut A
4	Special nut B
5	Spring
6	Front groomer

Note:
In the case that the front groomer is not used, you do not have to change the set grooming height.
Loosen the nuts fixing the right and left groomer adjustment screws, lift the groomer and tighten the right and left nuts to raise the front groomer so that it cannot contact the lawn.

Next time the groomer is used, loosen the right and left nuts, lower the groomer and tighten the nuts so that it can return to the grooming height set previously.

Procedure to Start / Stop Engine

Start / Stop of Engine

Procedure to Start Engine

Warning

Before starting the engine, make sure that there are no other people or obstacles around the machine.

Caution

Make sure that the engine clutch cover is installed in the prescribed position.

1. Make sure that the engine switch is in the "OFF" position.

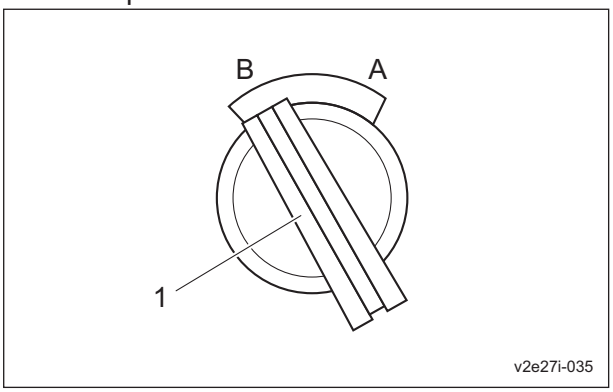

Procedure to Start Engine_001

1	Engine switch
A	ON
B	OFF

2. Make sure that the brake is locked.

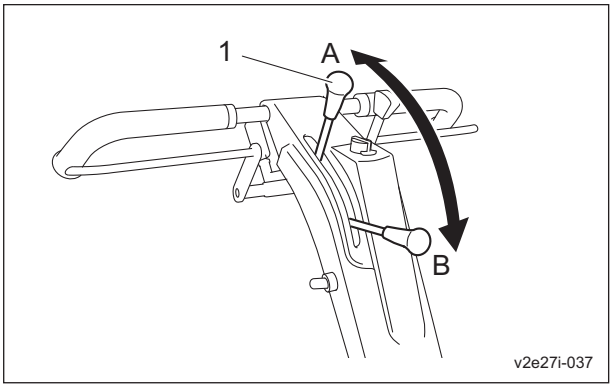

Procedure to Start Engine_002

https://truckmanualshub.com/

1	Brake lever
A	Lock
B	Unlock

3. Don't grip the main clutch lever.

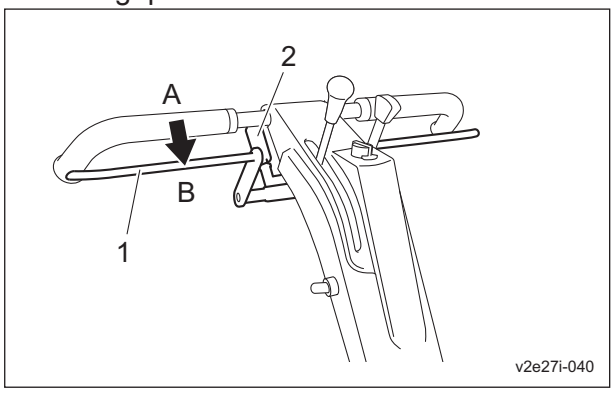

Procedure to Start Engine_003

1	Main clutch lever
2	Safety lock switch
A	ON
B	OFF

4. Set the fuel cock to the "Open" position.

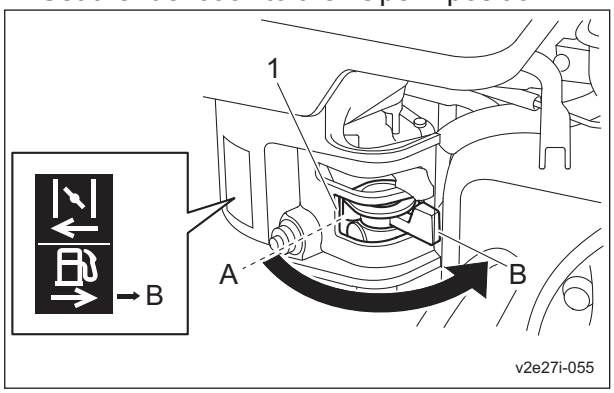

Procedure to Start Engine_004

1	Fuel cock
A	Close
B	Open

5. Set the engine switch to the "ON" position.

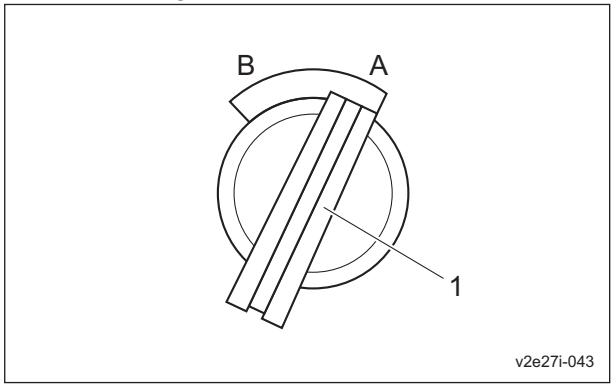

Procedure to Start Engine_005

1	Engine switch
A	ON
B	OFF

6. Shift the throttle lever halfway from low speed to high speed position.

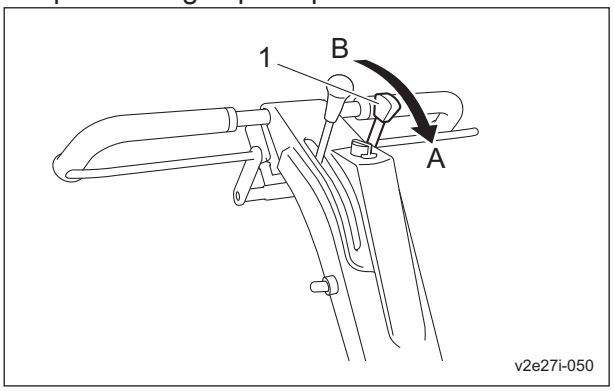

Procedure to Start Engine_006

1	Throttle lever
A	High speed
B	Low speed

7. Set the choke lever to the "Close" position.

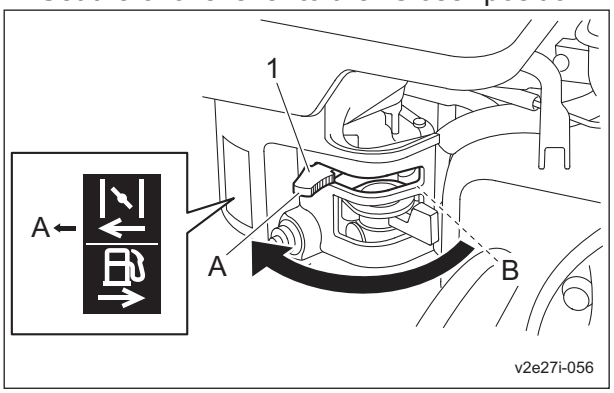

Procedure to Start Engine_007

1	Choke lever
A	Close
B	Open

8. Pull the recoil starter, and the engine will start.

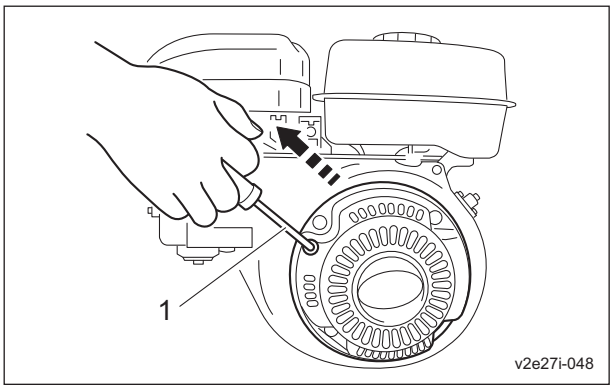

Procedure to Start Engine_008

https://truckmanualshub.com/

1	Recoil starter

9. Set the choke lever to the "Open" position.

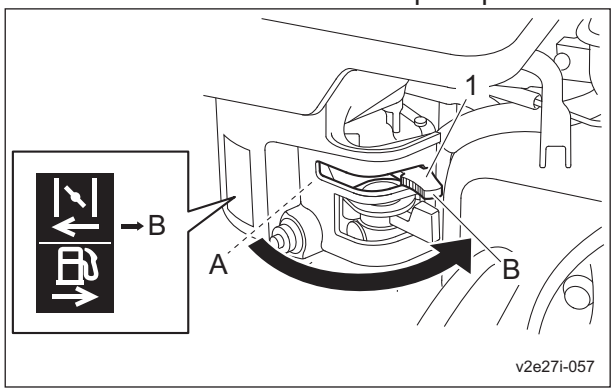

Procedure to Start Engine_009

1	Choke lever
A	Close
B	Open

Procedure to Stop Engine

1. Don't grip the main clutch lever.

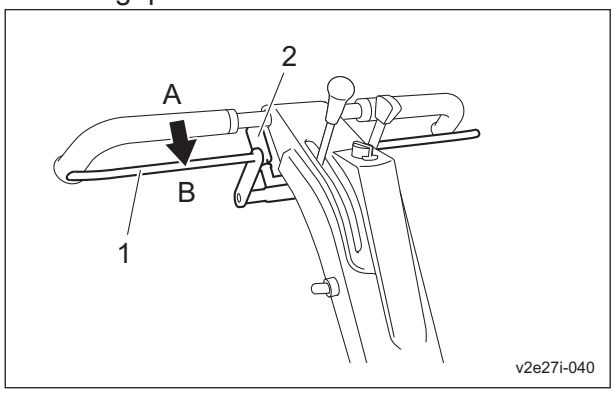

Procedure to Stop Engine_001

1	Main clutch lever
2	Safety lock switch
A	ON
B	OFF

2. Set the throttle lever to low speed position.

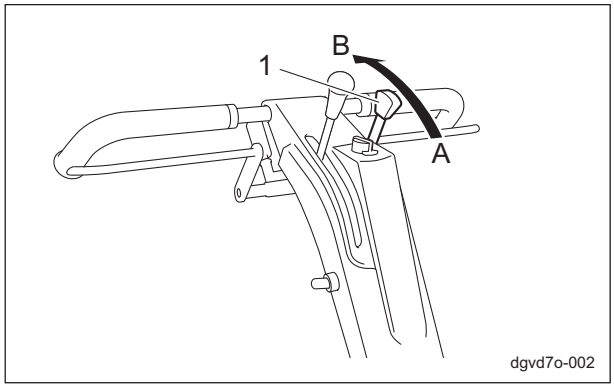

Procedure to Stop Engine_002

1	Throttle lever
A	High speed
B	Low speed

3. Set the engine switch to the "OFF" position.

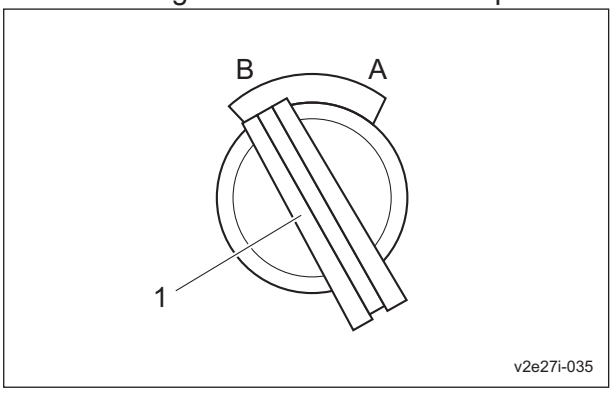

Procedure to Stop Engine_003

1	Engine switch
A	ON
B	OFF

4. Set the fuel cock to the "Close" position.

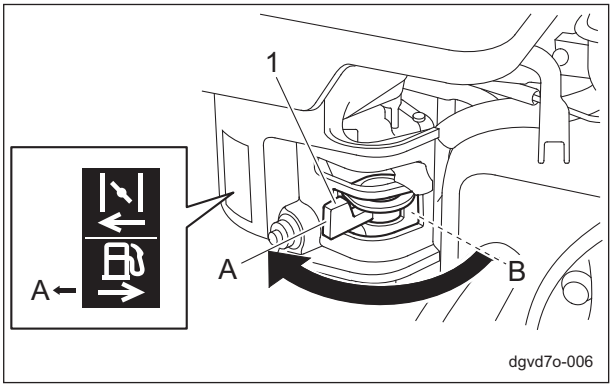

Procedure to Stop Engine_004

1	Fuel cock
A	Close
B	Open

https://truckmanualshub.com/

Operation of Each Section

Precautions for Operating the Machine

Caution

Under any circumstances drive the machine at such a speed that you can stop it immediately for emergencies.

Cautions before Leaving the Machine

Caution

Park the machine on a flat place.
Do not park the machine on a slope.

Caution

Check that the engine has stopped.

Caution

Make sure that the brake lever is locked.

Description of Operation Decals

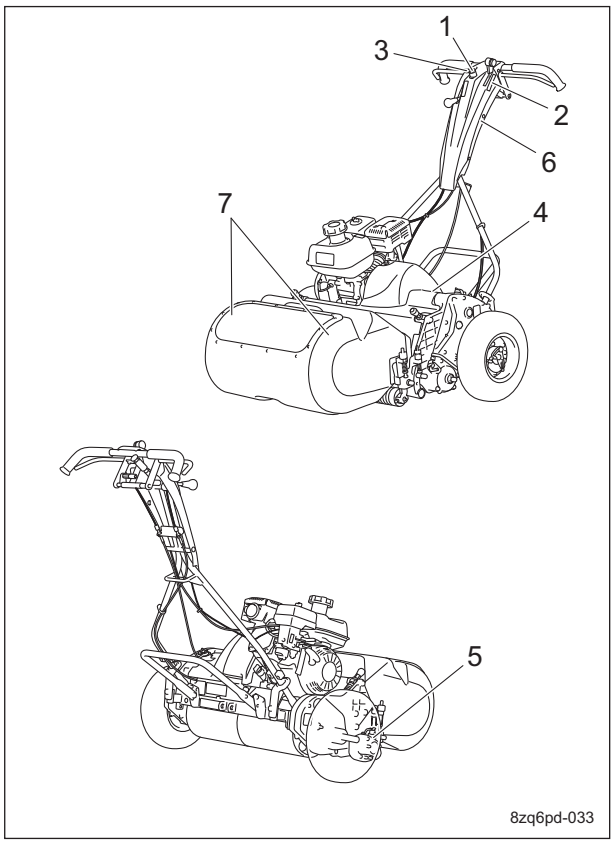

Description of Operation Decals_001

1	Decal, engine switch
2	Decal, accelerator
3	Decal, brake
4	Decal, clutch
5	Decal, groomer indication
6	Decal, light switch
7	Sticker, alignment 10300

https://truckmanualshub.com/

Handling Instructions

1	- Decal, engine switch This indicates the location of the engine switch.	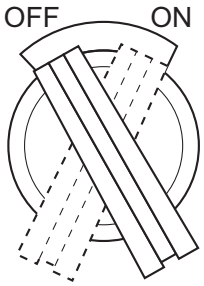 8zq6pd-006
2	K4203000700 Decal, accelerator This indicates the positions for the high and low engine speeds. HIGH: High speed LOW: Low speed	 6n6oux-014
3	K4209001200 Decal, brake It illustrates the locking position for the parking brake.	 6n6oux-092
4	K4203001110 Decal, clutch This indicates operating positions (traveling/working) for the reel cutter (cutting cylinder) and drum.	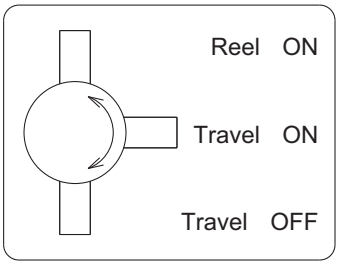 8zq6pd-013
5	K4203001120 Decal, groomer indication Note: Depending on the specifications, this function may not be available. This indicates the positions for the groomer rotation direction.	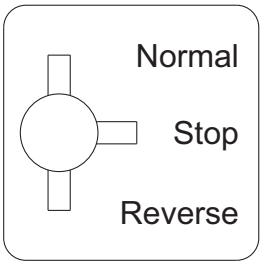 8zq6pd-014

https://truckmanualshub.com/

6	K4203001610 Decal, light switch Note: Depending on the specifications, this function may not be available. It illustrates ON/OFF of the light. 1. ON 2. OFF	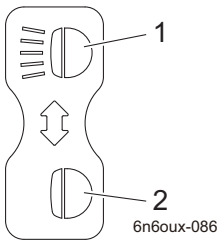
7	K4209001230 Sticker, alignment 10300 (set of 2) Note: Depending on the specifications, this function may not be available. This indicates the reference line for cutting. If necessary, attach to the grass catcher.	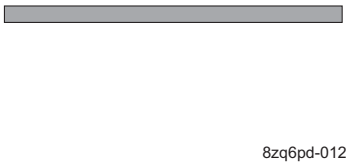

Light Switch

Note:
Depending on the specifications, this function may not be available.
The light switch is located in the handle panel.
Flip up the switch to turn on the light, and down to turn off.

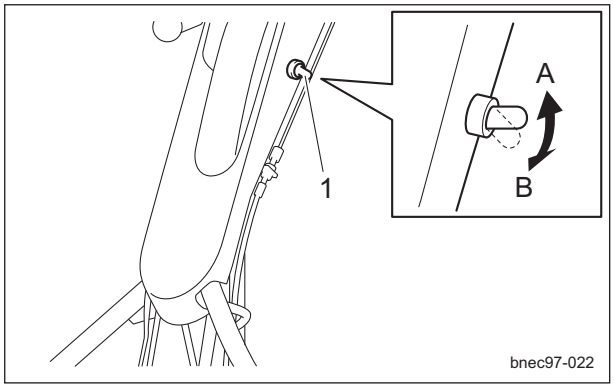

Light Switch_001

1	Light switch
A	ON
B	OFF

Engine Switch

The engine switch is located in the handle.
To start the engine, set the engine switch to the “ON” position, and to stop it, set to the “OFF” position.

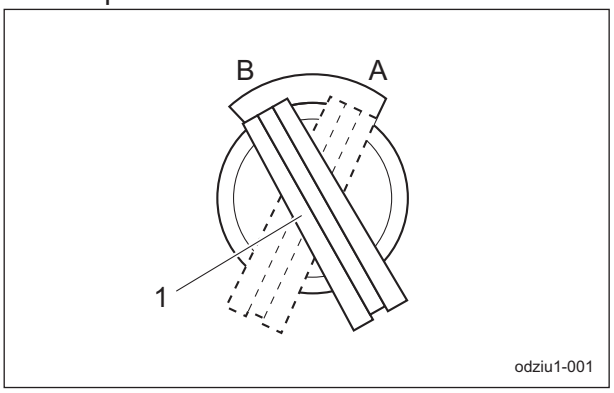

Engine Switch_001

1	Engine switch
A	ON
B	OFF

https://truckmanualshub.com/

Throttle Lever

The throttle lever is located in the handle and enables you to adjust the engine rpm.
Move the throttle lever toward HIGH (high speed) to increase the engine rpm, and toward LOW (low speed) to reduce the rpm.
Note:
The factory default engine rpm (maximum) is set to 3,400 rpm.
Operate at about 3,000 rpm.

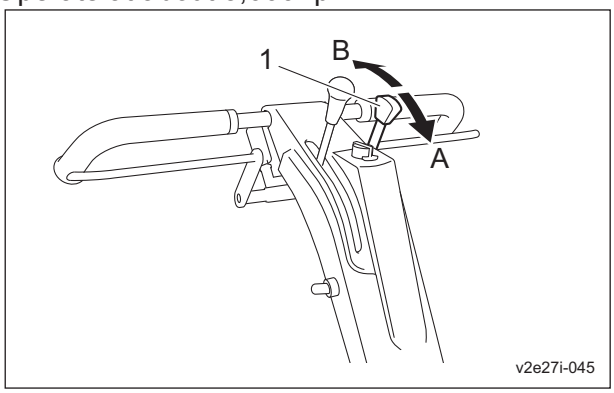

Throttle Lever_001

1	Throttle lever
A	High speed
B	Low speed

Brake Lever

> **Important**
>
> Avoid quick operation.
> Carefully and slowly operate the machine.

The brake lever is located in the handle.
Pull up the brake lever to activate braking and the travel of the machine is stopped.
Pull the brake lever up to the top and the brake lever is locked with brake applied.
Push down the brake lever to release the brake.
Note:
Lock the brake lever to apply Parking Brake.

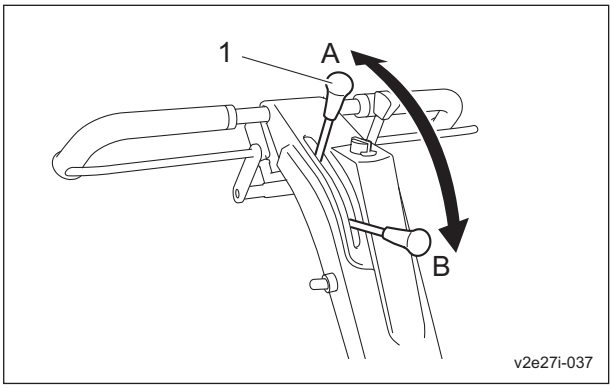

Brake Lever_001

1	Brake lever
A	Lock
B	Unlock

Safety Lock Switch

The safety lock switch is located in the handle.

> **Important**
>
> While the main clutch is in the "OFF" position, the safety lock is activated.

Grip the main clutch lever while pushing the safety lock switch to unlock the safety lock.

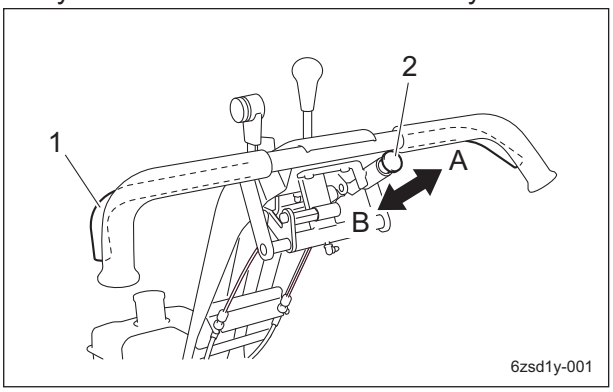

Safety Lock Switch_001

1	Main clutch lever
2	Safety lock switch
A	Lock
B	Unlock

https://truckmanualshub.com/

Main Clutch Lever

Important

Avoid quick operation.
Carefully and slowly operate the machine.

Important

The main clutch is not activated unless the safety lock released.

The main clutch lever is located in the handle. Unlock the safety lock and then grip the main clutch lever to traveling forward with rotating the reel cutter.
Release the main clutch lever from the hands to stop the machine traveling and the reel cutter rotating.

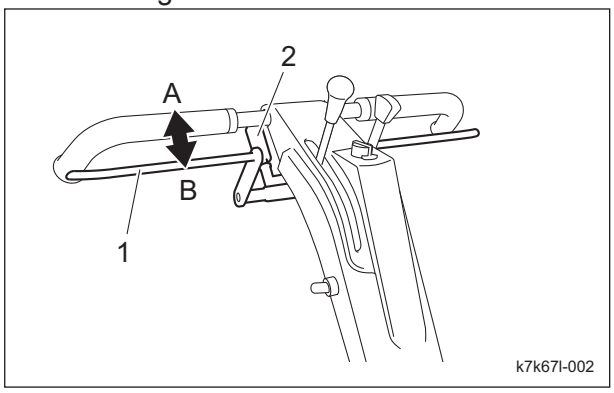

Main Clutch Lever_001

1	Main clutch lever
2	Safety lock switch
A	ON
B	OFF

Traveling/Working Selector Lever

Caution

This lever should be operated while the main clutch lever is set to the disengaged position, and adjusted to the position suitable for your work.

The traveling/working selector lever is located on top of the left frame and has three positions.
When the lever is set to the "Reel ON" position, the drum and reel cutter (cutting cylinder) operate and cutting is performed.
When the lever is set to the "Travel ON" position, only the drum operates and the machine travels.
When the lever is set to the "Travel OFF" position, both the drum and reel cutter (cutting cylinder) are not driven.

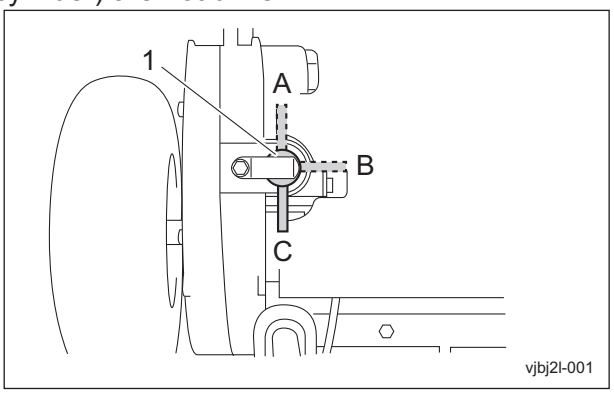

Traveling/Working Selector Lever_001

1	Traveling/Working selector lever
A	Reel ON
B	Travel ON
C	Travel OFF

Air Adjusting Plate

Caution

The air adjusting plate should be operated while the engine rotation is stopped, and adjusted to the position suitable for your work.

The air adjusting plate is attached on the reel cover.
The dispersing angle of clippings can be adjusted by changing the position of the air adjusting plate.
Adjust according to the lawn conditions.
The air adjusting plate can be moved closer to the reel cutter (cutting cylinder) when the lawn condition is “dry”.
The air adjusting plate can be moved away from the reel cutter (cutting cylinder) when the lawn condition is "wet".

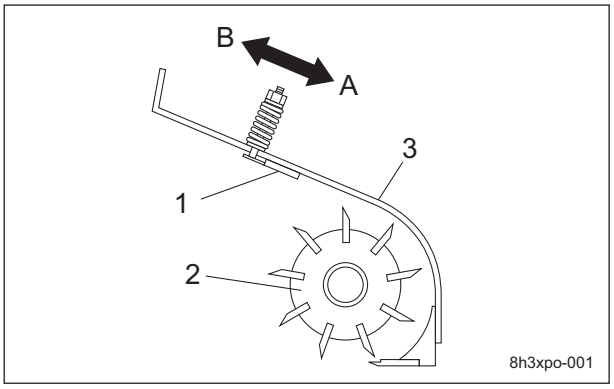

Air Adjusting Plate_001

https://truckmanualshub.com/

1	Air adjusting plate
2	Reel cutter (Cutting cylinder)
3	Reel cover
A	Close
B	Away

Engine Clutch Cover

The engine clutch cover is located on the left side of the engine and covers the engine clutch.
Open or close the engine clutch cover by removing or installing the lock bolt.

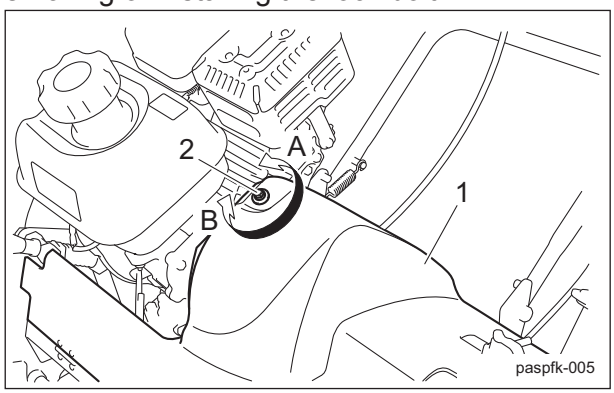

Engine Clutch Cover_001

1	Engine clutch cover
2	Lock bolt
A	Loosen
B	Tighten

Groomer Clutch Lever

Note:
Depending on the specifications, this function may not be available.

⚠ Caution

This lever should be operated while the main clutch lever is set to the disengaged position, and adjusted to the position suitable for your work.

The groomer clutch lever is located on the upper side of the right frame and has three positions.
When the lever is set to the "Normal " position, the groomer rotates in the same direction as the reel cutter (cutting cylinder).
When the lever is set to the "Reverse " position, the groomer rotates in the opposite direction as the reel cutter (cutting cylinder).
When the lever is set to the "Stop" position, the groomer will not rotate.

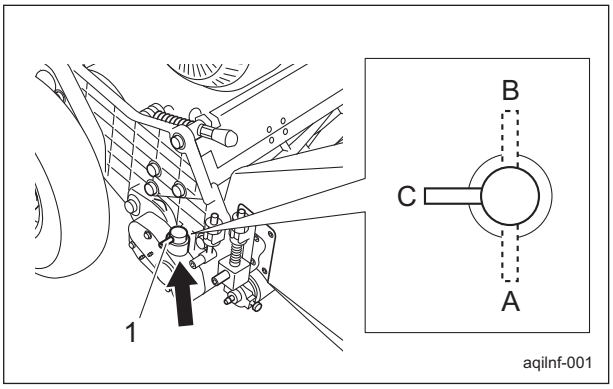

Groomer Clutch Lever_001

1	Groomer clutch lever
A	Normal
B	Reverse
C	Stop

IGCA (Independent Grass Catcher Arm)

Note:
Depending on the specifications, this function may not be available.
(IGCA can be installed onto the LM18GC/ LM56GC.)
IGCA is located above the mower.
The IGCA is a mechanism that prevents the mowing attitude of the mower from changing, even when there is an increase in the volume of clippings entering the grass catcher.
It eliminates as much as possible the transfer of rough handle movements causing changes in the mower's attitude.
Since the mower is stabilized while the lawn is mowed, even if the handle is treated roughly, the cutting height does not change from the start of mowing the green to the end.
Stable lawn mowing work can be performed regardless of the operator's skill level and machine proficiency level, enabling all greens to be mowed at a uniform cutting height.

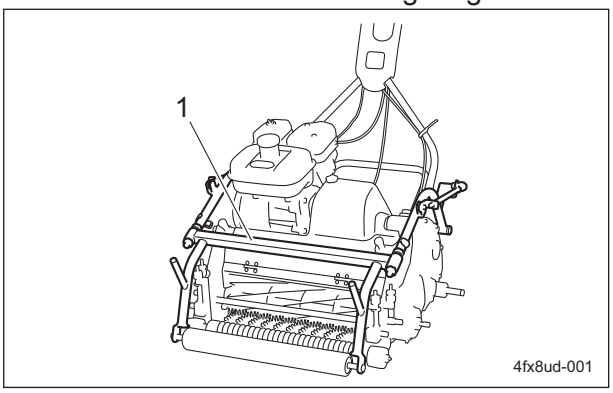

IGCA (Independent Grass Catcher Arm)_001

1	IGCA

https://truckmanualshub.com/

Issue 1:
The cutting height fluctuates due to the up-and-down movements of the mower caused by the weight of the grass catcher.

Solution:
The mower and grass catcher operate independently.
Therefore, the mowing attitude of the mower is not affected, even when the grass catcher becomes heavier from the added weight of grass, thatch, sand, etc.
The operator can mow at a uniform cutting height from the start of mowing the green to the end.

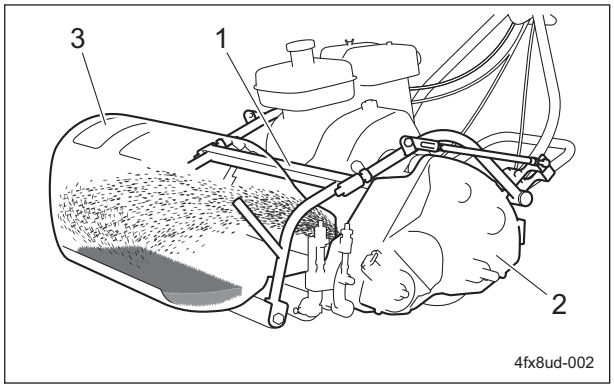

IGCA (Independent Grass Catcher Arm)_002

1	IGCA
2	Mower
3	Grass catcher

Issue 2:
The cutting height is uneven due to the up-and-down movements of the mower caused by the operator's handle movements.

Solution:
The grass catcher and handle are linked, eliminating as much as possible the transfer of rough handle movements causing changes in the mower's attitude.
By adjusting the link rods, the handle can remain centered in the handle adjuster, and uniform mower contact pressure can be achieved.

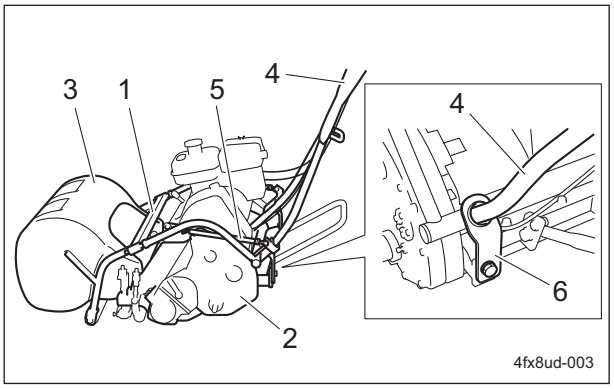

IGCA (Independent Grass Catcher Arm)_003

1	IGCA
2	Mower
3	Grass catcher
4	Handle
5	Link rod
6	Handle adjuster

Effect 1:
Regardless of skill level, any operator can mow at a uniform cutting height, as long as the handle can be adjusted within the range of the hole in the handle adjuster.
This is effective when accelerating very quickly or mowing undulations.

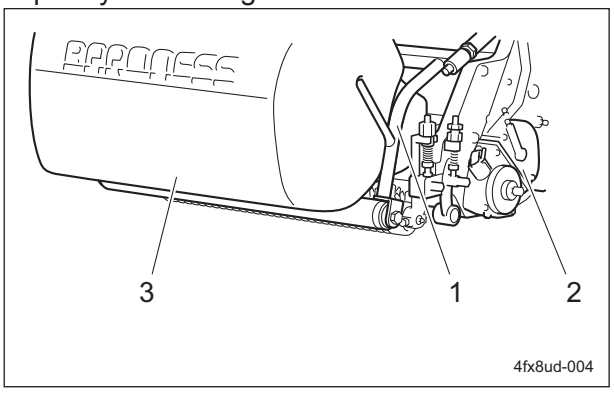

IGCA (Independent Grass Catcher Arm)_004

1	IGCA
2	Mower
3	Grass catcher

https://truckmanualshub.com/

Effect 2:
Since the load of the grass catcher does not affect the front roller, it is possible to reduce sinking (gouging or digging) caused by the front roller touching the ground when entering the green.

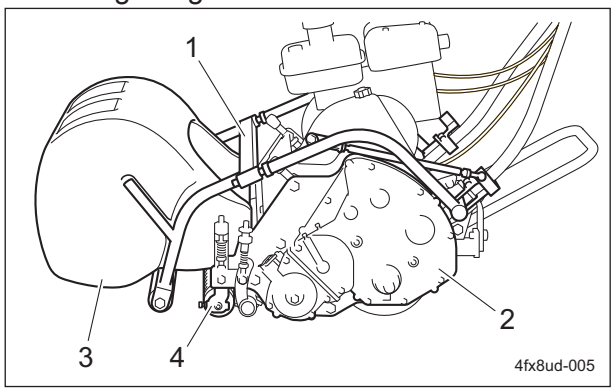

IGCA (Independent Grass Catcher Arm)_005

1	IGCA
2	Mower
3	Grass catcher
4	Front roller

Travel of Machine

Traveling the Machine

Warning

Do not start to move or stop the machine abruptly.

1. Install traveling tires.
2. Flip up the stand.
3. Set the traveling/working selector lever to "Travel ON" position of.
4. Start the engine.
5. Release the brake.
6. Release the safety lock and grip the main clutch lever slowly.
7. The machine can start traveling.

Cutting Work

Cutting Work

Warning

Do not start to move or stop the machine abruptly.

Caution

Do not operate on a steep slope.

Caution

Be sure to operate at an appropriate speed for the mowing site.
For mowing on an undulated surface, mow with lowered cutting speed.

Caution

Be sure to attach the grass catcher.
Discharge the clippings at the right time during operation.

1. Remove the traveling tires.
2. Flip up the stand.
3. Install the grass catcher.
4. Move the air adjusting plate to the desired position.
5. Move the groomer clutch lever to the desired position.
6. Make the traveling/working selector lever to the "Reel ON" position.
7. Start the engine.
8. Release the brake.
9. Release the safety lock and grip the main clutch lever slowly to start mowing.

Note:
The factory default maximum engine rotation speed is set to 3,400 rpm.
Operate at about 3,000 rpm.

https://truckmanualshub.com/

Removing/Installing Traveling Tires

Important

Mow with the traveling tires removed.

Use the traveling tires to move the machine by self-propelling.

Removal of traveling tires:

1. Set the machine on its stand.

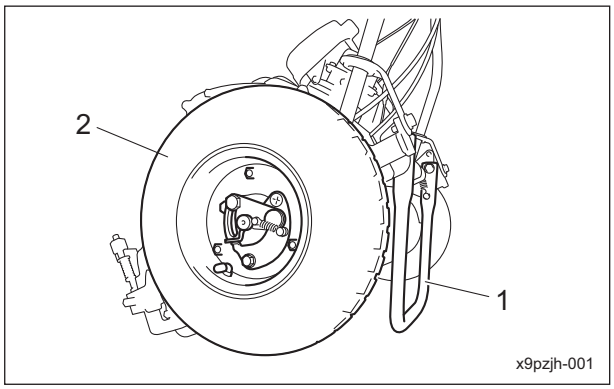

Removing/Installing Traveling Tires_001

1	Stand
2	Traveling tires

2. While sliding the lever of the wheel mounting plate and holding it in the released position, pull the traveling tire toward you to remove it.

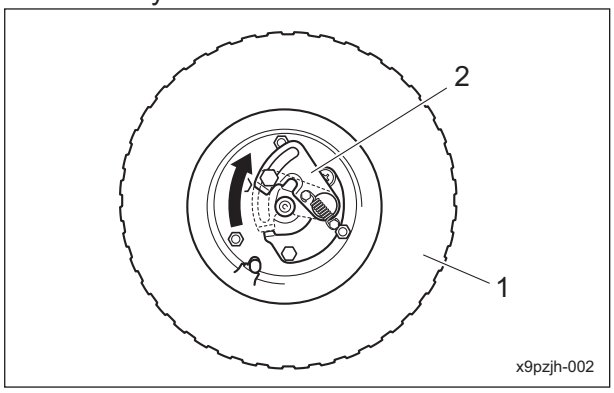

Removing/Installing Traveling Tires_002

1	Traveling tires
2	Wheel mounting plate

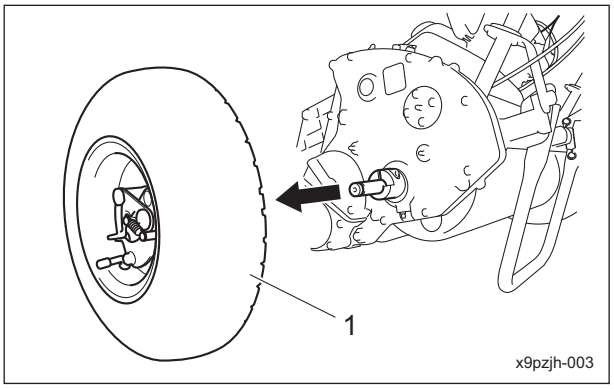

Removing/Installing Traveling Tires_003

1	Traveling tires

3. Follow the same steps to remove the traveling tire on the opposite side.

Installation of traveling tires:

Important

The drum shaft and traveling tire have depressions and projections that fit together. Match the shapes during installation.

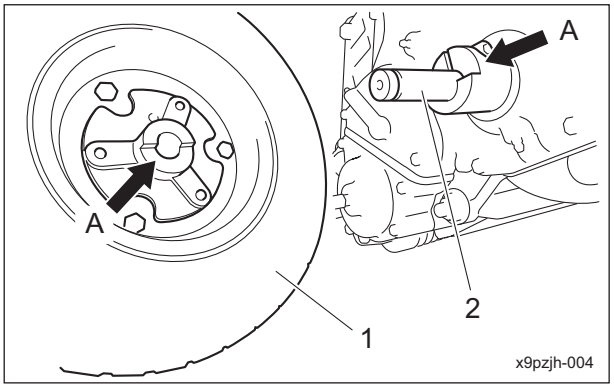

Removing/Installing Traveling Tires_004

1	Traveling tires
2	Drum shaft
A	Depressions and projections that fit together

https://truckmanualshub.com/

Important

Make sure that the wheel mounting plate fits into the groove in the drum shaft.
If they do not engage, the wheel may fall off.

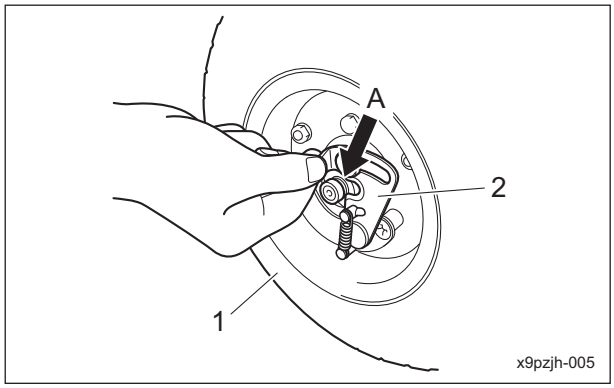

Removing/Installing Traveling Tires_005

1	Traveling tires
2	Wheel mounting plate
A	Groove

For installing the traveling tires, reverse the removing procedure.

Removing/Installing Grass Catcher

Caution

Stop the engine before removing / installing the grass catcher.

Removing Grass Catcher:
Lift up the grass catcher to detach the right & left latches of it from the roller brackets.

Installing Grass Catcher:
Attach the right & left latches of the grass catcher to the roller brackets.

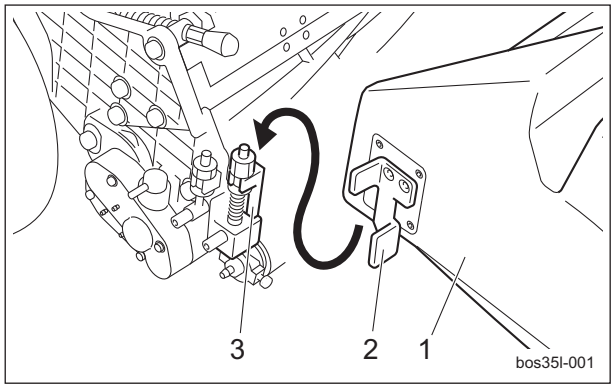

Removing/Installing Grass Catcher_001

1	Basket
2	Latch
3	Roller bracket

Transporting

Transporting Procedure

Caution

When loading and unloading the machine, wear non-slip shoes and travel slowly.

Important

When securing the machine with a rope, do not tie the rope to the engine.

Important

When securing the machine with a rope, be careful not to bend any wires.

Be extremely careful when loading the machine into a truck or a trailer.
Before loading or unloading, stop the truck or trailer on a level surface in a safe location, apply the parking brake, stop the engine, and then chock the wheels.
Before loading into a truck or a trailer for transportation, apply the parking brake of the machine, stop its engine, and then secure the machine with rope or any other sufficiently strong restraining device.
When using a loading ramp, select one of sufficient length, width and strength, and that will not allow the machine to slip off.

https://truckmanualshub.com/

Maintenance Precautions ..... Page 5-2

Position of mower during maintenance .....Page 5-2

Maintenance Schedule .....Page 5-3

Specified Values .....Page 5-5

Greasing ..... Page 5-6

About Greasing .....Page 5-6
Greasing Points ..... Page 5-6

Maintenance (Mower) ..... Page 5-8

Adjustment of Cutter Adjustment Spring ..... Page 5-8
Adjusting CAM .....Page 5-8
Back Lapping of Reel Cutter (Cutting Cylinder) .....Page 5-9
Sharpening of Reel Cutter (Cutting Cylinder) ..... Page 5-11
Replacement of Reel Cutter (Cutting Cylinder) ..... Page 5-12
Replacement of Bed Knife (Bottom Blade) ..... Page 5-14
Removing/Installing The Bed Knife Base .....Page 5-14
Removing/Installing The Bed Knife ..... Page 5-19
Removing/Installing The Small Cover (Left) .....Page 5-20

Maintenance (Main Body) ..... Page 5-21

Adjustment of Brake ..... Page 5-21
Adjustment of Engine Clutch ..... Page 5-21
Change of Air Cleaner ..... Page 5-22
Replacement of Engine Oil .....Page 5-23

Long-Term Storage .....Page 5-23

Before Long-Term Storage .....Page 5-23

Troubleshooting Procedures of Aftercut Appearance ..... Page 5-24

Scalping .....Page 5-24
Angled Mismatch ..... Page 5-24
Overlap Marks ..... Page 5-25
Blade does not cut .....Page 5-26
Uneven Blade Engagement .....Page 5-27

https://truckmanualshub.com/

Maintenance

Maintenance Precautions

Caution

First, learn well the maintenance operations you plan to perform.

Caution

Use tools appropriate for each maintenance operation.

Caution

For the safe and best performance of your machine, use Baroness genuine parts for replacement and accessories.
Please note that our product warranty may be void if you use non-genuine parts for replacement or accessories.

Position of mower during maintenance

Important

If the mower handle is left leaned on the ground for a long time during maintenance engine oil may enter the engine combustion chamber and cause the engine to run improperly.
Be careful not to keep this position long and ensure sufficient time for any oil to drain back by returning to upright position for ten minutes before starting.

https://truckmanualshub.com/

Maintenance Schedule

LM18GC/LM56GC/LM66GC/LM66TC
Follow the maintenance schedule below.
○・・・Inspect, adjust, supply, clean
●・・・Replace (first time)
△・・・Replace

		Maintenance Item	Before Work	After Work	Every 10 hrs.	Every 20 hrs.	Every 25 hrs.	Every 50 hrs.	Every 100 hrs.	Every 300 hrs.	Every 500 hrs.	Every year	Every 2 years	When Required	Remarks
Engine	*2	Check tightening bolts and nuts	○												
	*2	Check fuel level	○												
		Check fuel and oil leaks	○												
	*2	Check engine oil level	○												
	*2	Check air cleaner		○											
		Clean engine and circumference of the muffler cover		○											
	*2	Change engine oil				●			△						20 hours first change
	*2	Check spark plug							○						
	*2	Clean spark arrester							○						
	*2	Clean sediment cup							○						
	*1	Clean fuel tank & filter							○						
	*1	Check idling speed								○		○			Check every 300 hours or every year whichever comes earlier
	*1	Check valve clearance								○		○			Check every 300 hours or every year whichever comes earlier
	*2	Replace air cleaner								△		△			Paper filter element: Replace every 300 hours or every year whichever comes earlier Foam filter element: Replace as necessary
	*2	Replace spark plug								△		△			Replace every 300 hours or every year whichever comes earlier
	*1	Remove carbon in combustion chamber									○				
	*1	Check fuel hoses and clamp bands											○		Replace as necessary.

https://truckmanualshub.com/

Maintenance

Maintenance Item			Before Work	After Work	Every 10 hrs.	Every 20 hrs.	Every 25 hrs.	Every 50 hrs.	Every 100 hrs.	Every 300 hrs.	Every 500 hrs.	Every year	Every 2 years	When Required	Remarks
Main body		Check tire pressures and condition	○												Refer to "Inspection of Tires"
		Check damaged parts	○												
		Check tightening bolts and nuts	○												
		Check main clutch lever actuation	○												
		Check brake function	○												Refer to "Inspection of Brake""Adjustment of Brake"
		Check work lamp illumination	○												
		Adjust handle position	○												Refer to "Adjustment of Handle"
		Check safety lock of main clutch	○												
		Check cover condition	○												
		Clean machine exterior		○											
		Grease and Lubricate all moving parts			○			○							Refer to "Greasing Points"
		Adjust engine clutch spring												○	Refer to "Adjustment of Engine Clutch"
		Check brake wire							○						Refer to "Inspection of Wire" Replace as necessary.
		Check electrical wiring condition (Damage, defacement and joint looseness)										○			
		Adjust engine clutch gap												○	Refer to "Adjustment of Engine Clutch"
		Check throttle wire												○	Refer to "Inspection of Wire"
		Check main clutch wire												○	Refer to "Inspection of Wire"
Cutting section		Check blade condition (Reel cutter and Bedknife)	○												Refer to "Inspection of Reel Cutter (Cutting Cylinder) and Bed Knife (Bottom Blade)"
		Check cover condition	○												
		Check roller condition	○												
		Check groomer condition	○												
		Engage blades	○												Refer to "Adjustment of Blade Engagement"
		Check mowing height	○												Refer to "Adjustment of Cutting Height"

https://truckmanualshub.com/

Maintenance Item			Before Work	After Work	Every 10 hrs.	Every 20 hrs.	Every 25 hrs.	Every 50 hrs.	Every 100 hrs.	Every 300 hrs.	Every 500 hrs.	Every year	Every 2 years	When Required	Remarks
Cutting section		Adjust groomer	○												Refer to "Adjustment of Groomer"
		Check damaged parts	○												
		Check tightening bolts and nuts	○												
		Clean Cutting section		○											
		Grease			○			○							Refer to "Greasing Points"
		Replace bearings inside gearcase										△			
		Replace front roller bearings										△			
		Replace oil seals inside gearcase										△			
		Replace front roller oil seals										△			
		Replace grease inside gearcase										△			
		Clean and Grease Bedknife Eccentric Bushes												○	
		Adjust cutter adjustment spring												○	Refer to "Adjustment of Cutter Adjustment Spring"
		Backlap blades												○	Refer to "Back Lapping of Reel Cutter (Cutting Cylinder)"
		Regrind blades (Reel cutter and Bed knife)												○	Regrind/Replace blades as and when required

・*1: Consult your local Baroness Dealer for this service.
・*2: Refer to the Engine's Owner's Manual.
・The values for consumables are not guaranteed.

Specified Values

Fuel tank capacity	2.0 dm^3 (2.0 L)	Gasoline
Engine oil capacity	0.56 dm^3 (0.56 L)	SAE30 (API Service Grade SE or higher)
Engine plug	-	NGK BPR4ES
Tire pneumatic pressure	120 kPa (1.2 kgf/cm^2)	4.10/3.50 - 6
Cutter adjustment spring	50.0 mm (1.97 in)	Length of coil spring
Reel cutter shaft bearing preload spring	11.5 mm (0.453 in)	Total length of spring
Reel cutter rotation torque	0.8 - 1.0 N・m (8 - 10 kgf・cm)	
Engine clutch	0.5 - 1.0 mm (0.020 - 0.039 in)	Gap between engine clutch and clutch facing
Operation distance of clutch plate	1.0 - 2.0 mm (0.039 - 0.079 in)	
Engine clutch spring	61.0 mm (2.40 in)	Total length of spring

https://truckmanualshub.com/

Greasing

About Greasing

Since there may be adhesion or damage due to lack of grease on moving parts, they must be greased.
Add urea-based No. 2 grease in accordance with the Maintenance Schedule.
Other locations where the specified grease or lubricant is used are indicated in "Greasing Points".
Add grease using the specified grease or lubricant.

Greasing Points

Grease nipples are installed in the following locations.

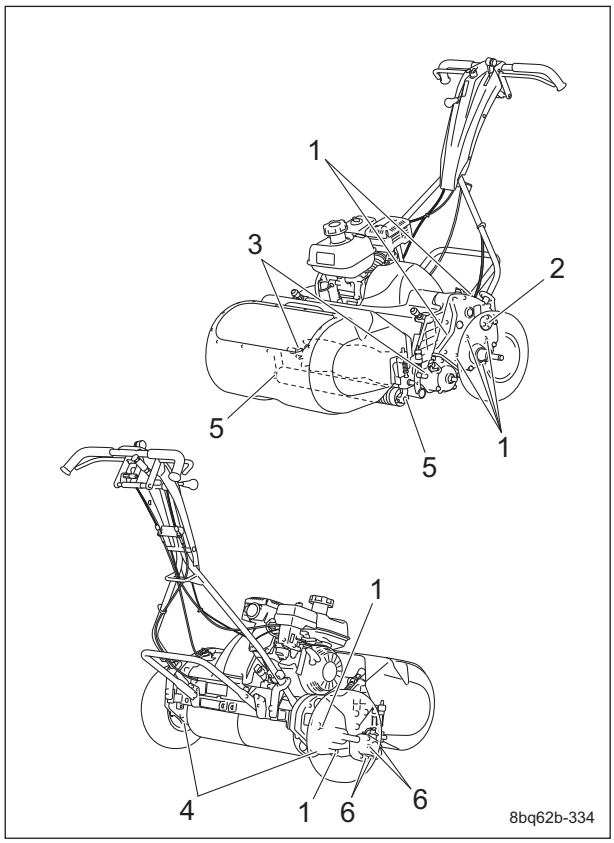

Greasing Points_001

	Location	No. of greasing points	Greasing period	
1	Frame & Transmission	7	A	B
2	Differential gear	1	A	-
3	Reel bearing	2	-	B
4	Drum housing	2	-	B
5	Front roller	2	-	B
6	Groomer	4	A	B

Add grease to A every 10 hours and B every 50 hours.

1. Frame & Transmission
   There are seven points in total on the left and right.

Right side

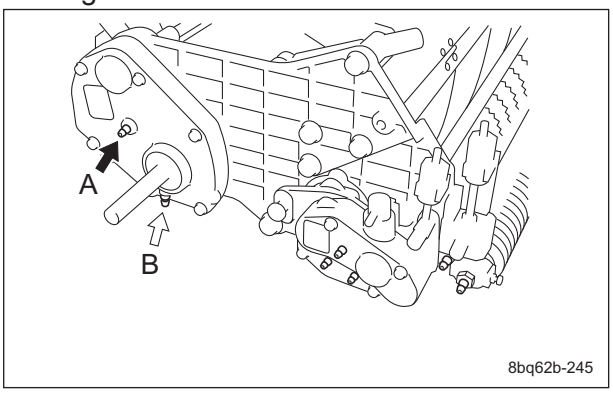

Greasing Points_002

Left side

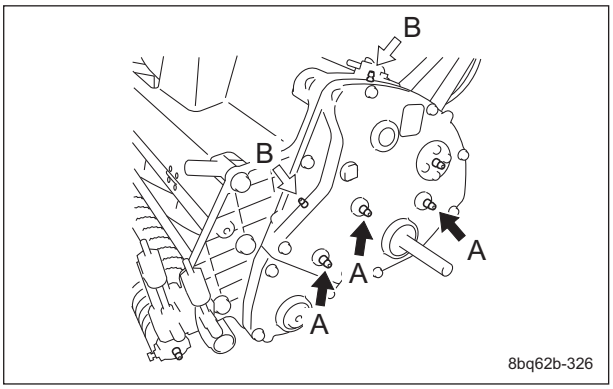

Greasing Points_003

2. Differential gear

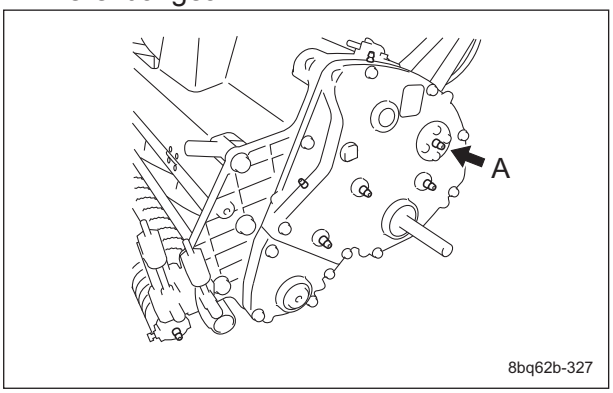

Greasing Points_004

https://truckmanualshub.com/

3. Reel bearing

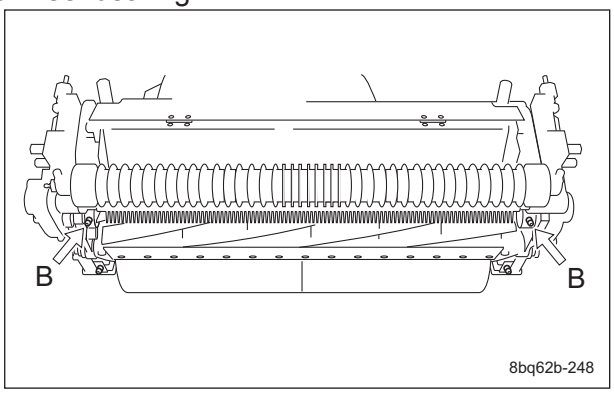

Greasing Points_005

4. Drum housing

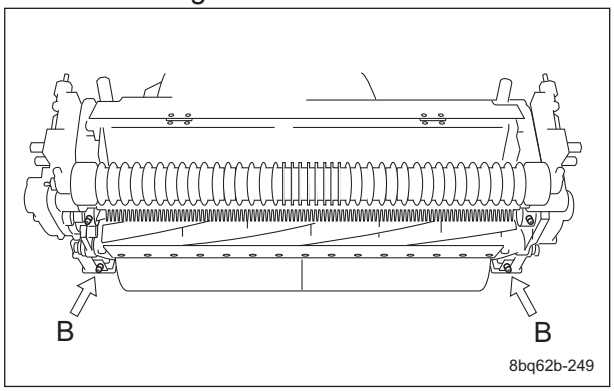

Greasing Points_006

5. Front roller
There is one point each on the left and right.

Right side

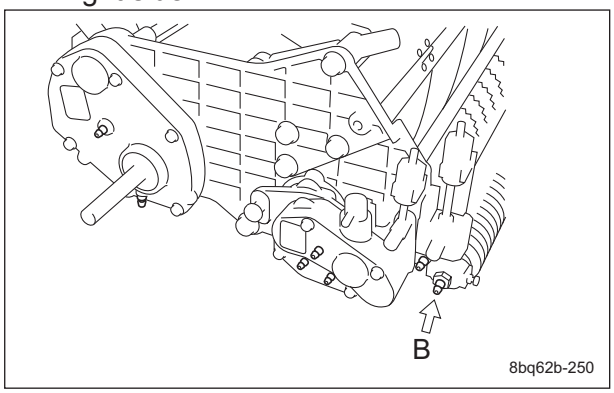

Greasing Points_007

Left side

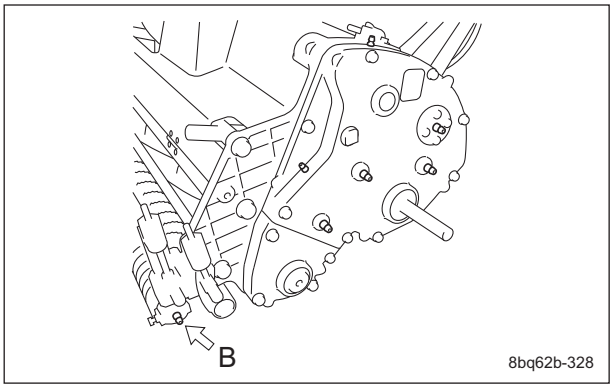

Greasing Points_008

6. Groomer
Note:
Depending on the specifications, this function may not be available.

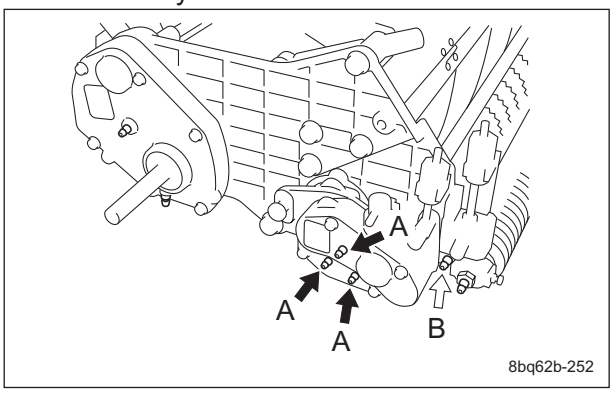

Greasing Points_009

https://truckmanualshub.com/

Maintenance (Mower)

Adjustment of Cutter Adjustment Spring

Caution

Both the reel cutter (cutting cylinder) and the bed knife (bottom blade) are edged tools. Handle them carefully, since they could cut your hands and feet.

Caution

When handling the reel cutter (cutting cylinder) or bed knife (bottom blade), wear gloves to protect your hands.
Pay attention not to let the reel cutter (cutting cylinder) catch your gloves. Otherwise, you may injure your hand or fingers.

If the diameter of the reel cutter (cutting cylinder) becomes smaller, adjust the cutter adjustment spring.

1. Adjust the blade engagement.
2. Loosen the spring adjusting screw and the nut, and then adjust the length of the coil spring to 50.0 mm (1.97 in).

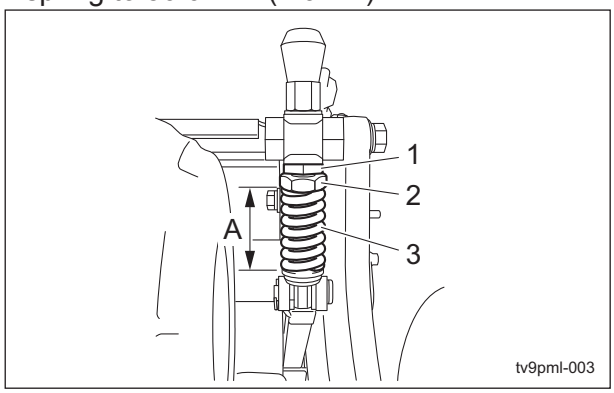

Adjustment of Cutter Adjustment Spring_001

1	Spring adjusting screw
2	Nut
3	Spring
A	50 mm (1.97 in)

Adjusting CAM

Turn the cam bush on both sides of the bottom blade, and the blade can be raised and lowered respectively by maximum 0.1 mm (0.004 in).
The above method is used when the edges of the reel cutter (cutting cylinder) and the bed knife (bottom blade) are not in parallel.

Note:
The figure below shows the situation when you see from the left frame.
The right frame is mirror reversed.

When the gap at the left frame side between the reel cutter (cutting cylinder) and the bed knife (bottom blade) appears.

1. Loosen the locknut and turn the left cam bush clockwise to eliminate only the gap distance.
   When you raise the bed knife (bottom blade) by 0.1 mm (0.004 in), turn the left cam bush clockwise 30 degrees.
2. Once the adjustment completed, tighten the locknut securely.

When the gap at the right frame side between the reel cutter (cutting cylinder) and the bed knife (bottom blade) appears.

1. Loosen the locknut and turn the right cam bush anticlockwise to eliminate only the gap distance.
2. Once the adjustment completed, tighten the locknut securely.

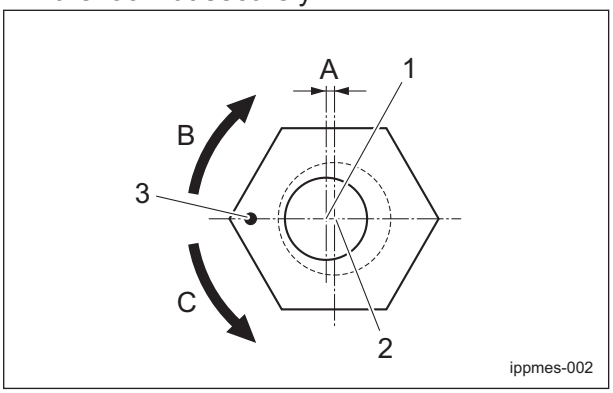

Adjusting CAM_001

1	Center of cutter pin
2	Center of cam bush
3	Punch mark
A	0.1 mm (0.004 in)
B	Raising the bed knife
C	Lowering the bed knife.

https://truckmanualshub.com/

Back Lapping of Reel Cutter (Cutting Cylinder)

Back lapping is work similar to sharpening a cooking knife. If the edges of the reel cutter (cutting cylinder) and the bed knife (bottom blade) become blunt and make cutting difficult, both the reel cutter (cutting cylinder) and the bed knife (bottom blade) should be simultaneously sharpened by reversing the reel cutter (cutting cylinder) with an abrasive paste applied.
However, back lapping is a temporary measure and would not restore the sharpness completely.
If the edges of the reel cutter (cutting cylinder) and the bed knife (bottom blade) become blunt and make cutting difficult, follow the steps below to perform back lapping.

Caution

Both the reel cutter (cutting cylinder) and the bed knife (bottom blade) are edged tools. Handle them carefully, since they could cut your hands and feet.

Caution

During back lapping, the reel cutter (cutting cylinder) rotates.
Keep hands and feet away from moving parts.

Caution

Do not perform back lapping with any other persons.

1. Have the following items ready: Strips of newspaper, Abrasive [Back lapping powder mixed with oil; or gel compound (Baroness genuine abrasive)], Brush.

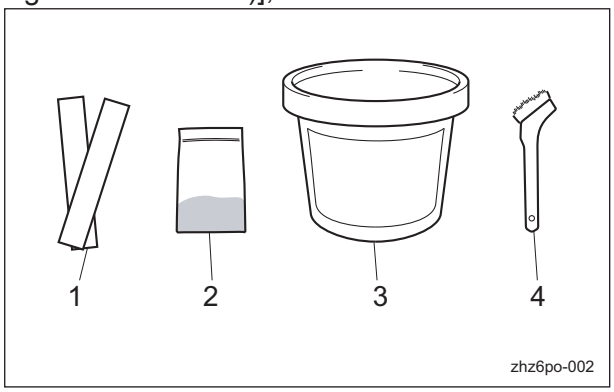

Back Lapping of Reel Cutter (Cutting Cylinder)_001

1	Newspaper
2	Back lapping powder
3	Gel compound
4	Brush

Note:
The mixing ratio for the abrasive, in volume, is one part back lapping powder (#200 - #400) to three or four parts oil.

2. Have a lapping machine or the lapping handle ready.

Caution

When handling the reel cutter (cutting cylinder) or bed knife (bottom blade), wear gloves to protect your hands.
However, pay attention not to let the reel cutter (cutting cylinder) catch your gloves, etc. Otherwise, you may injure your hand or fingers.

Important

Check the sharpness of the blade by checking the blade engagement after cutting grass.

3. Stop the engine.
4. Set the traveling/working selector lever to the "Travel OFF" position.

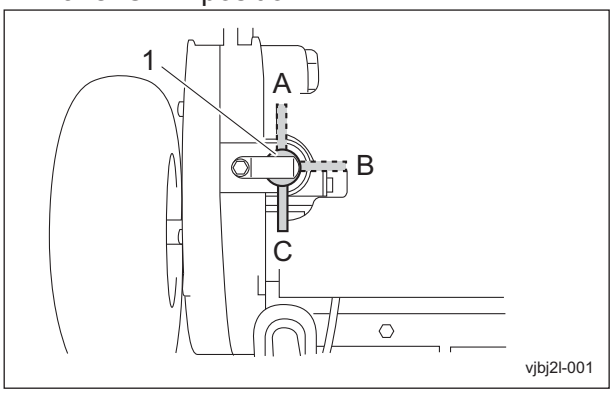

Back Lapping of Reel Cutter (Cutting Cylinder)_002

1	Traveling/Working selector lever
A	Reel ON
B	Travel ON
C	Travel OFF

https://truckmanualshub.com/

5. Insert one or two strips of newspaper into the space between the reel cutter (cutting cylinder) and the bed knife (bottom blade) at an angle of 90 degrees. Then, rotate the reel cutter (cutting cylinder) counter-clockwise (when you face the mower unit from the left) to check the sharpness of the blades.

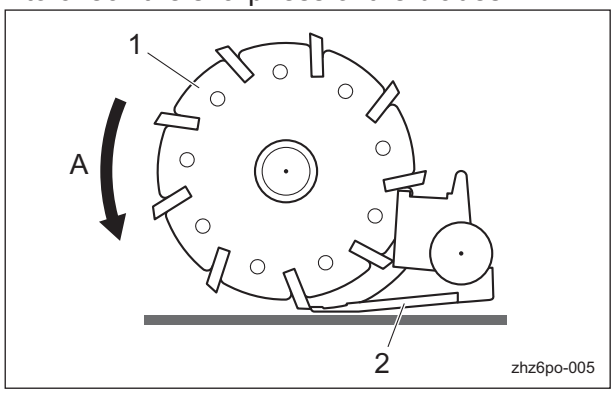

Back Lapping of Reel Cutter (Cutting Cylinder)_003

1	Reel cutter (Cutting cylinder)
2	Bed knife (bottom blade)
A	Rotation direction

6. Check the sharpness of the entire range (three or four points from the left edge to the right one) of the reel cutter (cutting cylinder).
7. With a piece of chalk, etc., mark locations on the blade that are sharp.
8. With a roller receiver, jack stand, etc., position the machine so that the bed knife (bottom blade) is level.

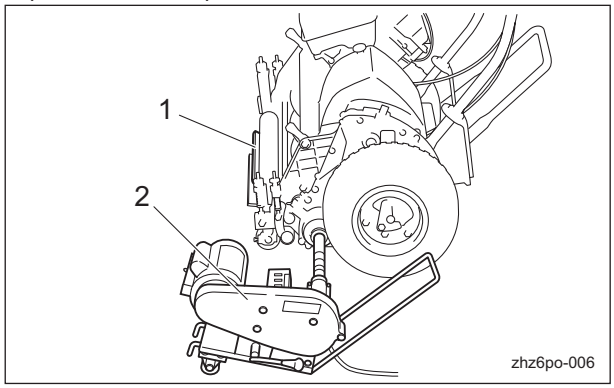

Back Lapping of Reel Cutter (Cutting Cylinder)_004

1	Roller receiver
2	Lapping machine

9. Connect the lapping machine or lapping handle to the lapping bolt of the machine.

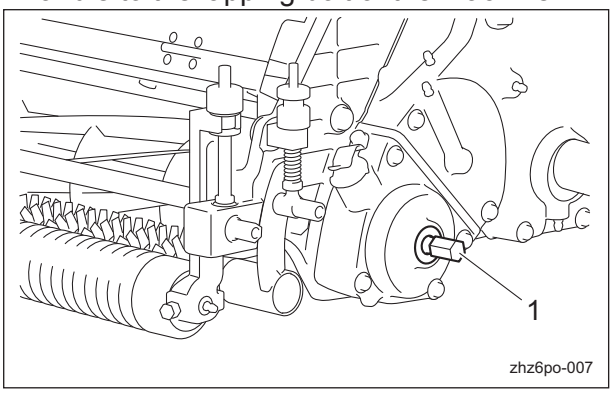

Back Lapping of Reel Cutter (Cutting Cylinder)_005

1	Lapping bolt

10. Rotate the reel cutter (cutting cylinder) clockwise (reverse rotation) when you face the mower unit from the left.
    - Turn on the lapping machine.
    - Otherwise, rotate the lapping handle.

Important

The right side of the reel cutter (cutting cylinder) (when you face the mower unit from the front) is inclined to wear earlier than the left side. Accordingly be sure to move the brush from the left to the right to apply the abrasive.

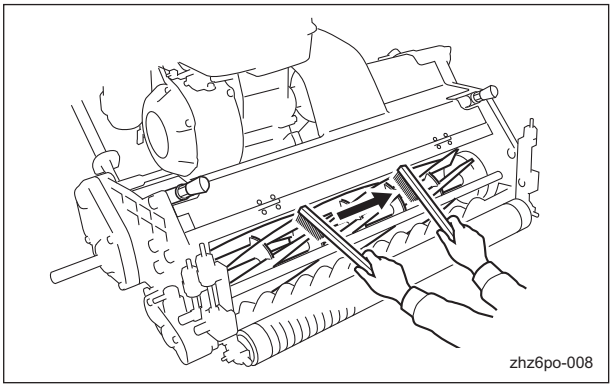

Back Lapping of Reel Cutter (Cutting Cylinder)_006

11. Apply the abrasive evenly with the brush on the top side of reel cutter (cutting cylinder) where the newspaper was cut well or of chalk-marked locations.
    (Never apply to blunt areas.)
12. Rotate the reel cutter (cutting cylinder) for a while and stop its rotation when the sound of contact is lost.
    - Turn off the lapping machine.
    - Otherwise, stop rotating the lapping handle.

https://truckmanualshub.com/

13. Remove the lapping machine or lapping handle.
14. Wash off or wipe off with a cloth, etc., the abrasive from the reel cutter (cutting cylinder), and then check the sharpness.
15. Repeat steps 5 to 14 until the entire range (three or four points between the left and right ends) of the reel cutter (cutting cylinder) is uniformly sharpened.
16. Finally, apply abrasive to the entire blade width of the reel cutter (cutting cylinder) and perform final back lapping.

Important

When cleaning, do not allow water to come into contact with the engine or electrical components.

17. Wash off the abrasive with a washer, etc.
18. While checking the blade for sharpness, adjust blade engagement.

Sharpening of Reel Cutter (Cutting Cylinder)

Caution

Both the reel cutter (cutting cylinder) and the bed knife (bottom blade) are edged tools. Handle them carefully, since they could cut your hands and feet.

Caution

Wear gloves when touching edged tools to avoid cutting your hands.

The sharpening of the reel cutter (cutting cylinder) consists in maintaining its roundness and creating a relief (second edge face).
This work should be performed if the sharpness cannot be restored, even after back lapping, or if the relief (second edge face) has worn away.
Sharpen the reel cutter (cutting cylinder) when the sharpness cannot be restored, even after back lapping, or when the relief (second edge face) has worn away, there is full contact or back lapping takes too much time.
In addition, if the reel cutter (cutting cylinder) becomes worn and its shape conical, perform cylindrical grinding to return it to a cylindrical shape.

For sharpening the reel cutter (cutting cylinder), contact your dealer or Baroness.
If the outer diameter of the reel cutter (cutting cylinder) after sharpening is more than the usage limit, the reel cutter (cutting cylinder) can be sharpened.

New		Usage limit	
Dimension A (Outer diameter of reel cutter (cutting cylinder))	Dimension B (Distance from blade edge to outer edge of reel cutter (cutting cylinder) shaft)	Dimension A (Outer diameter of reel cutter (cutting cylinder))	Dimension B (Distance from blade edge to outer edge of reel cutter (cutting cylinder) shaft)
128 mm	51.3 mm	118 mm	46.3 mm

Note:
The outer diameter of the reel cutter (cutting cylinder) shaft is 25.4 mm.

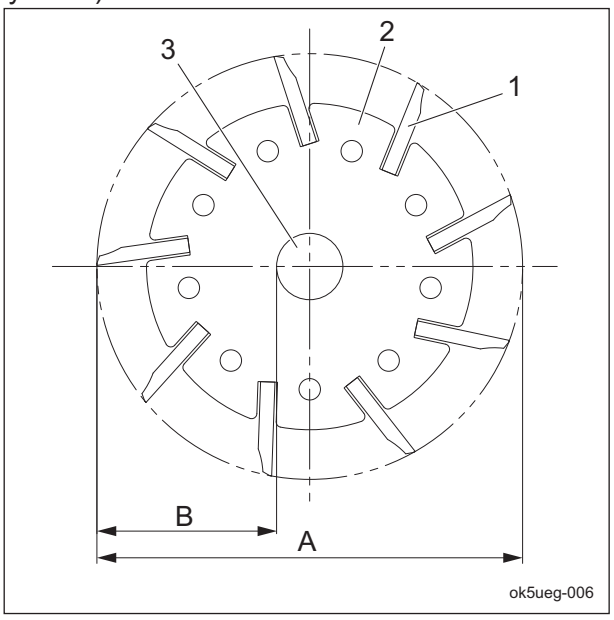

Sharpening of Reel Cutter (Cutting Cylinder)_001

1	Reel cutter (cutting cylinder) blade
2	Reel cutter (cutting cylinder) disc
3	Reel cutter (cutting cylinder) shaft
A	Outer diameter of reel cutter (cutting cylinder)
B	Distance from blade edge to outer edge of reel cutter (cutting cylinder) shaft

https://truckmanualshub.com/

Sharpening is necessary when the reel cutter (cutting cylinder) reaches a condition described below.

1. When the sharpening width (length of contacting surface of bed knife (bottom blade)) for the outer diameter of the reel cutter (cutting cylinder) is greater than the usage limit.

Outer diameter of reel cutter (cutting cylinder) (new part)	Usage limit of sharpening width for outer diameter of reel cutter (cutting cylinder)
128 mm	2.5 mm (factory-recommended)

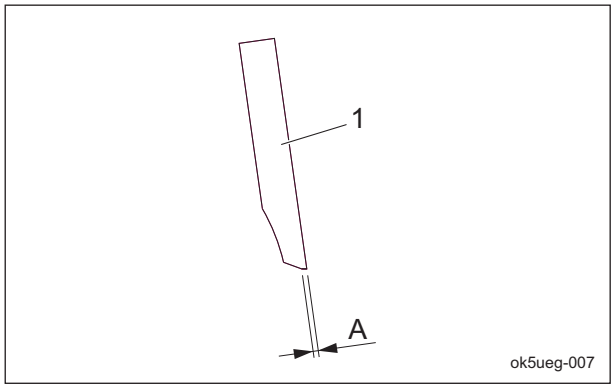

Sharpening of Reel Cutter (Cutting Cylinder)_002

1	Reel cutter (cutting cylinder) blade
A	Sharpening width for outer diameter of reel cutter (cutting cylinder)

2. When the edges become blunt or the blade edge cannot be formed with back lapping
3. When the reel cutter (cutting cylinder) becomes worn and its shape conical, or when blade engagement adjustment cannot be performed

Replacement of Reel Cutter (Cutting Cylinder)

Caution

Both the reel cutter (cutting cylinder) and the bed knife (bottom blade) are edged tools. Handle them carefully, since they could cut your hands and feet.

Caution

Wear gloves when touching edged tools to avoid cutting your hands.

The criteria for replacing the reel cutter (cutting cylinder) are described below.
However, these criteria are only a reference and do not guarantee performance like that of a new reel cutter (cutting cylinder).

1. When the outer diameter of the reel cutter (cutting cylinder) is less than the usage limit

New		Usage limit	
Dimension A (Outer diameter of reel cutter (cutting cylinder))	Dimension B (Distance from blade edge to outer edge of reel cutter (cutting cylinder) shaft)	Dimension A (Outer diameter of reel cutter (cutting cylinder))	Dimension B (Distance from blade edge to outer edge of reel cutter (cutting cylinder) shaft)
128 mm	51.3 mm	118 mm	46.3 mm

Note:
The outer diameter of the reel cutter (cutting cylinder) shaft is 25.4 mm.

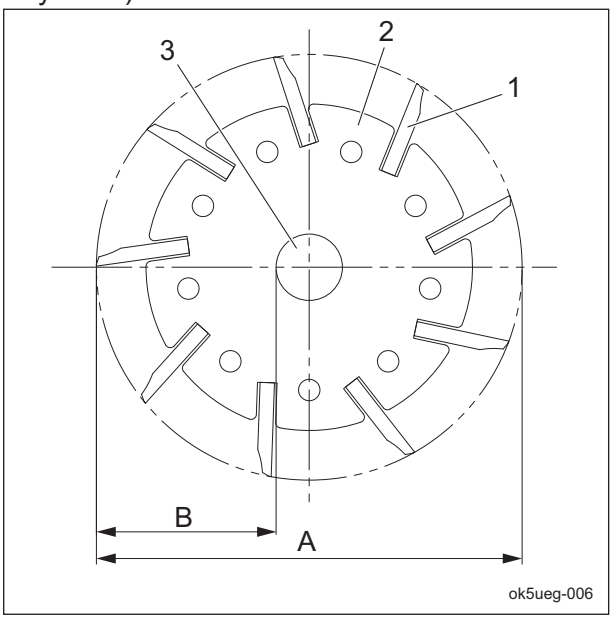

Replacement of Reel Cutter (Cutting Cylinder)_001

1	Reel cutter (cutting cylinder) blade
2	Reel cutter (cutting cylinder) disc
3	Reel cutter (cutting cylinder) shaft
A	Outer diameter of reel cutter (cutting cylinder)
B	Distance from blade edge to outer edge of reel cutter (cutting cylinder) shaft

https://truckmanualshub.com/

Installing The Reel Cutter (Cutting Cylinder)

Caution

Both the reel cutter (cutting cylinder) and the bed knife (bottom blade) are edged tools. Handle them carefully, since they could cut your hands and feet.

Caution

When handling the reel cutter (cutting cylinder) or bed knife (bottom blade), wear gloves to protect your hands.
Pay attention not to let the reel cutter (cutting cylinder) catch your gloves. Otherwise, you may injure your hand or fingers.

Caution

Refer to the Tightening Torque table.
Note that the Baroness product warranty may not apply to defects caused by incorrect or overtorque tightening, etc.

Follow the steps below to replace the bearings and oil seals on the left and right ends of the reel cutter (cutting cylinder).

Important

Use 30204JRP6 as bearing.

1. Fill up the bearings and oil seals with grease (Excelite EP No. 2).
2. Install the reel cutter (cutting cylinder) onto the frame.
3. Tighten the nut until the length of the spring reaches 11.5 mm (0.453 in), and then lock it.
   Note:
   Preloading with a constant force by spring pressure is possible.
4. Measure the rotating torque of the reel cutter (cutting cylinder) with a torque wrench.
   The specified value is 0.8 to 1.0 N·m (8 to 10 kgf·cm).

Specification without groomer:

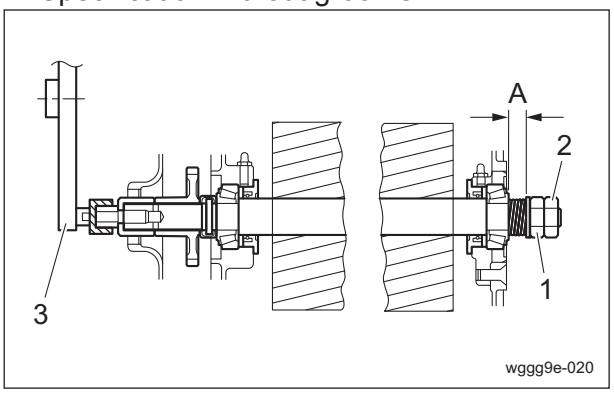

Installing The Reel Cutter (Cutting Cylinder)_001

1	Washer
2	Left-hand nut
3	Torque wrench
A	11.5 mm (0.453 in)

Specification with groomer:

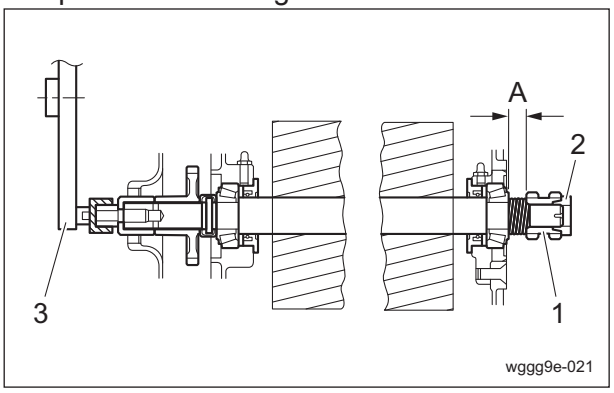

Installing The Reel Cutter (Cutting Cylinder)_002

1	Reel gear
2	Reel gear fixing nut
3	Torque wrench
A	11.5 mm (0.453 in)

https://truckmanualshub.com/

Replacement of Bed Knife (Bottom Blade)

Caution

Both the reel cutter (cutting cylinder) and the bed knife (bottom blade) are edged tools. Handle them carefully, since they could cut your hands and feet.

Caution

Wear gloves when touching edged tools to avoid cutting your hands.

The criteria for replacing the bed knife (bottom blade) are described below.

1. When the reel cutter (cutting cylinder) is ground
2. When the reel cutter (cutting cylinder) is replaced
3. When the bed knife (bottom blade) is worn

Standard blade
Replace the bed knife (bottom blade) before it no longer has a front face.

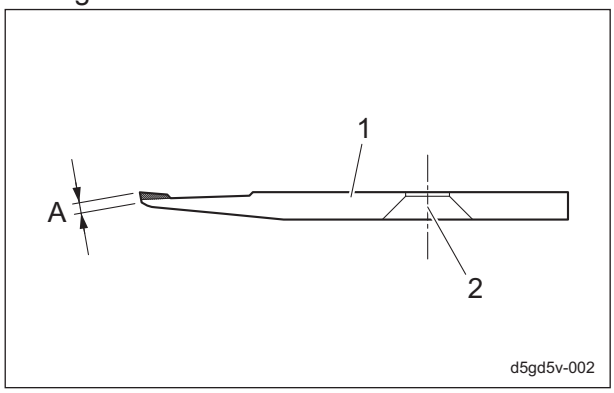

Replacement of Bed Knife (Bottom Blade)_001

1	Bed knife (bottom blade)
2	Mounting hole
A	Front face

High-speed-steel-tipped blade
Replace the bed knife (bottom blade) before it no longer has a tip.

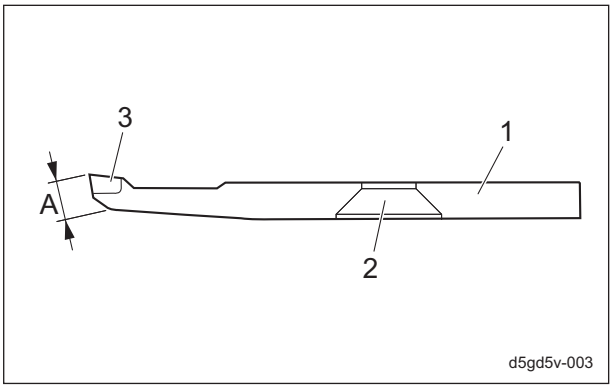

Replacement of Bed Knife (Bottom Blade)_002

1	Bed knife (bottom blade)
2	Mounting hole
3	Tip
A	Front face

Removing/Installing The Bed Knife Base

Removing The Bed Knife Base

Caution

Both the reel cutter (cutting cylinder) and the bed knife (bottom blade) are edged tools. Handle them carefully, since they could cut your hands and feet.

Caution

Raising the front part of the machine for servicing operation may create a falling hazard.
Support the machine securely.

1. Loosen the lock nuts on both sides, and then loosen the cutter pins.

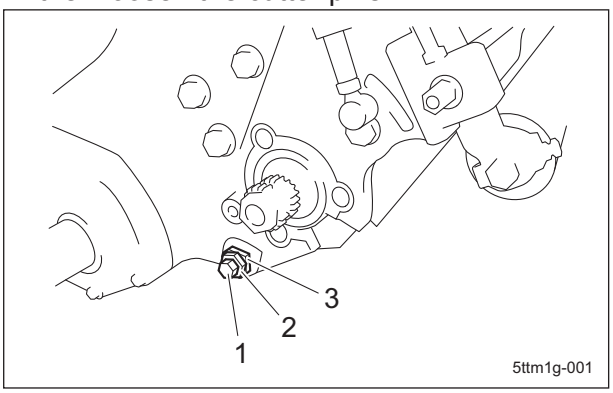

Removing The Bed Knife Base_001

1	Cutter pin
2	Lock nut
3	Cam bush

https://truckmanualshub.com/

2. Remove the 2 bolts that secure the bed knife base arm Assy and bed knife base COMP.

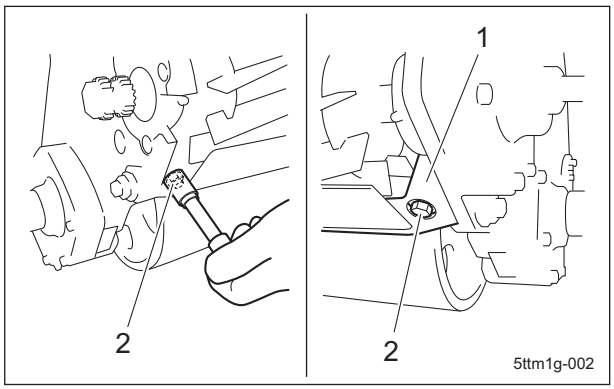

Removing The Bed Knife Base_002

1	Bed knife base COMP
2	Bolt

Important

Keep 1 to 5 pieces of washer for clearance adjustment between the fulcrum seat and the frame if there are any of them.

3. Unscrew the fulcrum seat bolt, S washer, washer, and remove the bed knife base arm Assy from the bed knife base COMP.

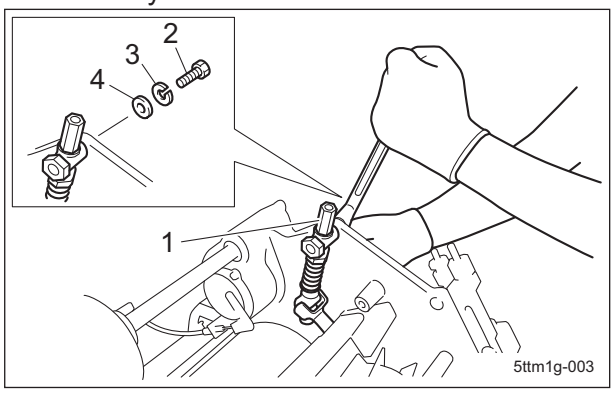

Removing The Bed Knife Base_003

1	Bed knife base arm Assy
2	Bolt
3	S washer
4	Washer

⚠ Caution

Be careful when you remove the cutter pin as the bed knife base COMP may fall off.

4. While supporting the bed knife base COMP, remove the cutter pins and lock nuts on both sides.

5. Remove the bed knife base COMP.

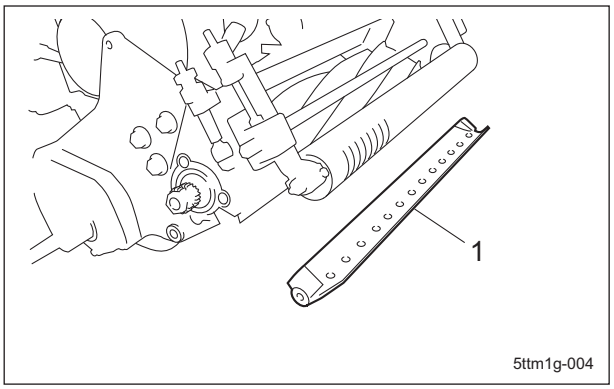

Removing The Bed Knife Base_004

1	Bed knife base COMP

https://truckmanualshub.com/

Installation of Bed Knife Base

Caution

Both the reel cutter (cutting cylinder) and the bed knife (bottom blade) are edged tools. Handle them carefully, since they could cut your hands and feet.

Caution

When handling the reel cutter (cutting cylinder) or bed knife (bottom blade), wear gloves to protect your hands.
Pay attention not to let the reel cutter (cutting cylinder) catch your gloves. Otherwise, you may injure your hand or fingers.

Caution

While operations are performed with the front of the machine raised, there is a danger of it falling.
Securely support the machine.

Caution

Refer to the Tightening Torque table.
Note that the Baroness product warranty may not apply to defects caused by incorrect or overtorque tightening, etc.

Important

Make sure that there is no binding at the cam bushes in the frame of the mower unit.

1. Temporarily install the bed knife base COMP onto the machine with the left and right cutter pins and lock nuts.
   Note:
   At this time, tighten the lock nuts to the heads of the cutter pins, but do not allow the lock nuts to contact the cam bushes.

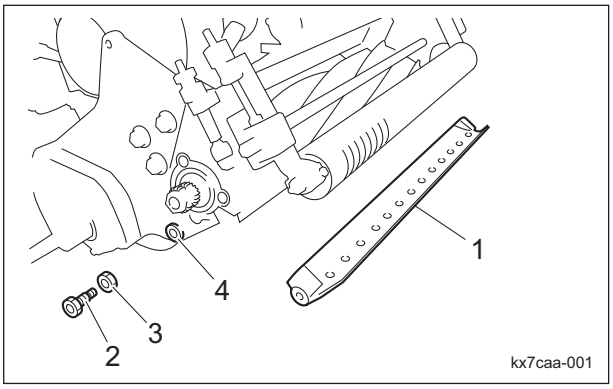

Installation of Bed Knife Base_001

1	Bed knife base COMP
2	Cutter pin
3	Lock nut
4	Cam bush

Important

Install the bed knife base arm Assy parallel to the frame.
During installation, be careful not to twist both arms.

2. Insert the bed knife base arm Assy into the bed knife base COMP.
3. Temporarily install the bed knife base arm with the bolt of the fulcrum seat.

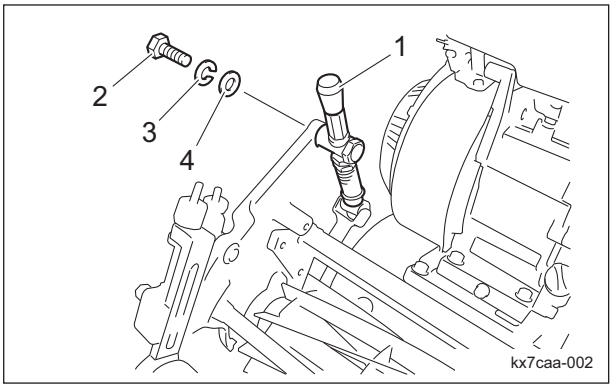

Installation of Bed Knife Base_002

1	Bed knife base arm Assy
2	Bolt
3	Spring washer
4	Washer

https://truckmanualshub.com/

4. Tighten the bolt used to install the bed knife base arm Assy, and then firmly secure it.

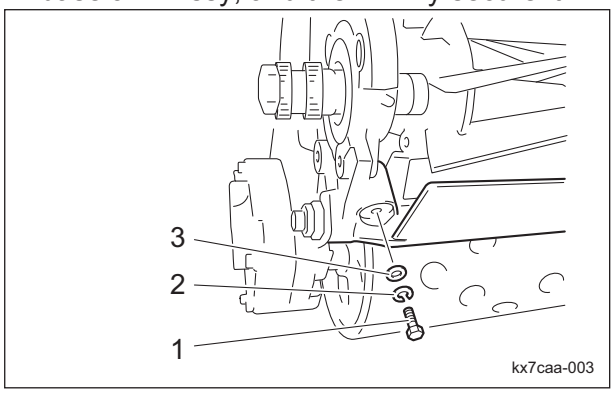

Installation of Bed Knife Base_003

1	Bolt
2	Spring washer
3	Washer

Important

Do not tighten the left and right lock nuts.

5. Tighten the left and right cutter pins used to temporarily install the bed knife base COMP.
6. Remove the fulcrum seat bolt used to temporarily install the bed knife base arm.
   Note:
   With the weight of the bed knife base arm, the bed knife (bottom blade) will slightly come into contact with the reel cutter (cutting cylinder).
7. Align the punch mark on each (left and right) cam bush with the travel direction.

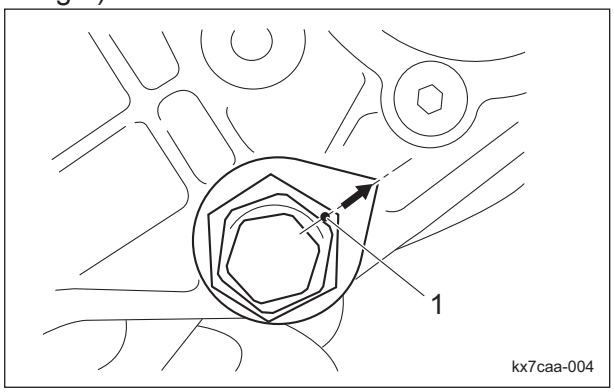

Installation of Bed Knife Base_004

1	Punch mark

8. Make sure that the bed knife (bottom blade) contacts the reel cutter (cutting cylinder).

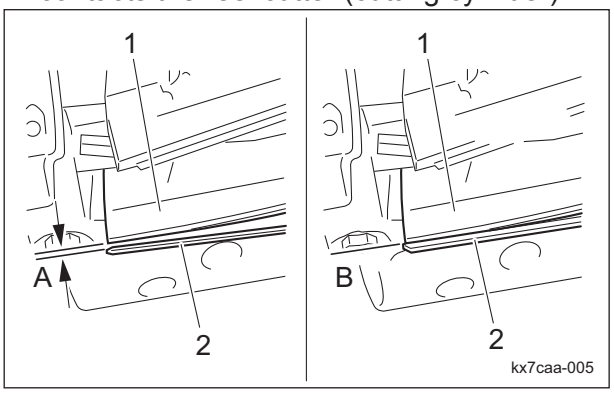

Installation of Bed Knife Base_005

1	Reel cutter (Cutting cylinder)
2	Bed knife (bottom blade)
A	Gap
B	No gap

9. Insert one or two strips of newspaper into the space between the reel cutter (cutting cylinder) and the bed knife (bottom blade) at an angle of 90 degrees. Then, rotate the reel cutter (cutting cylinder) counterclockwise (as seen from the left side of the mower unit) by hand to check the sharpness of the entire range (three or four points from the left edge to the right one) of the reel cutter (cutting cylinder).

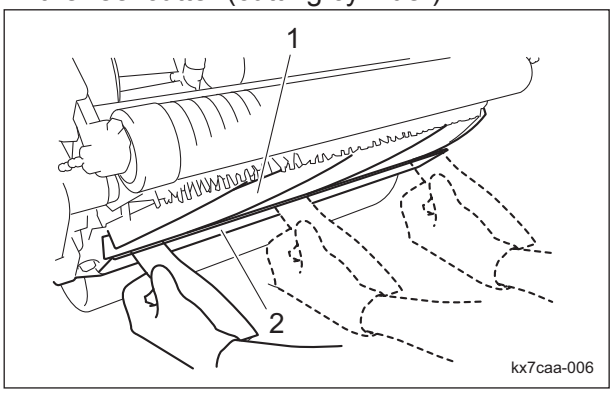

Installation of Bed Knife Base_006

1	Reel cutter (Cutting cylinder)
2	Bed knife (bottom blade)

https://truckmanualshub.com/

10. Adjust the positions of the cam bushes so that both sides cut.
    "Adjusting CAM" (Page 5-8)
    Note:
    After making adjustments, use a marker, etc., to place a mark on the machine at the position of the punch mark.

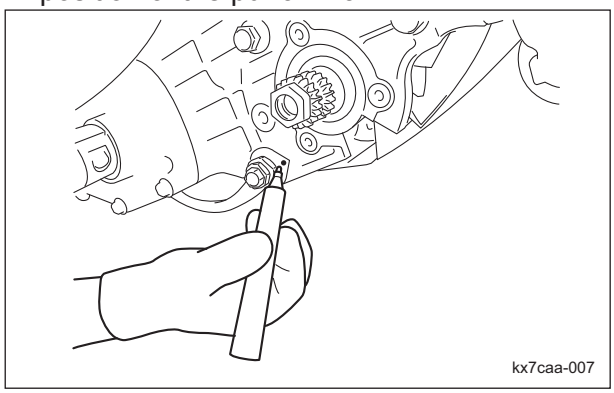

Installation of Bed Knife Base_007

Important

If one to five gap adjustment washers had been inserted between the fulcrum seat and the frame, insert gap adjustment washers so that the gap is eliminated.

11. Install the fulcrum seats onto the left and right frames with the bolts, spring washers and washers.

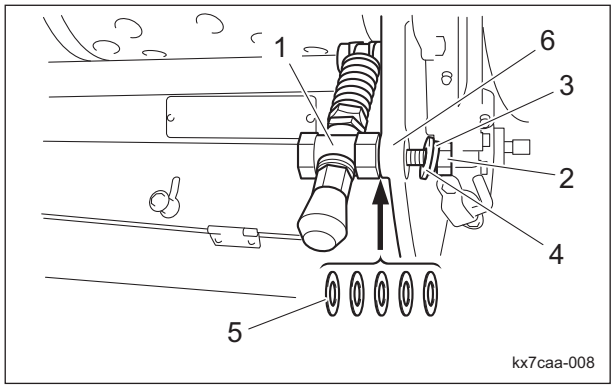

Installation of Bed Knife Base_008

1	Fulcrum seat
2	Bolt
3	Spring washer
4	Washer
5	Gap adjustment washer
6	Frame

12. Align the vertical hole in the fulcrum seat, and then secure it.
    OK: The cutter adjustment bolt is centered in the hole of the fulcrum seat.
    NG: The cutter adjustment bolt is not centered in the hole of the fulcrum seat.

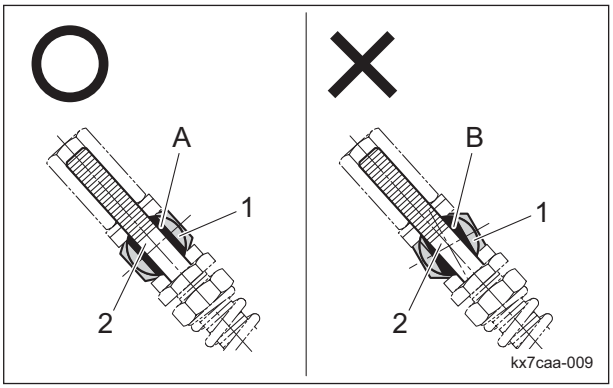

Installation of Bed Knife Base_009

1	Fulcrum seat
2	Cutter adjustment bolt
A	OK
B	NG

Important

Make sure that the cam bush does not move from the marked position.

13. Tighten the lock nuts of the left and right cutter pins.

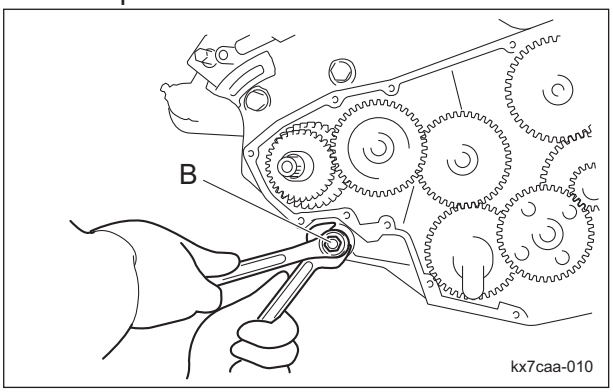

Installation of Bed Knife Base_010

1	Lock nut

https://truckmanualshub.com/

Removing/Installing The Bed Knife

Removing The Bed Knife

Caution

Both the reel cutter (cutting cylinder) and the bed knife (bottom blade) are edged tools. Handle them carefully, since they could cut your hands and feet.

Caution

Raising the front part of the machine for servicing operation may create a falling hazard.
Support the machine securely.

1. Remove the bed knife base COMP.
2. Place the bed knife base COMP on a stable workbench.
3. Remove the bed knife by loosening the screw with a hammer driver or punch.

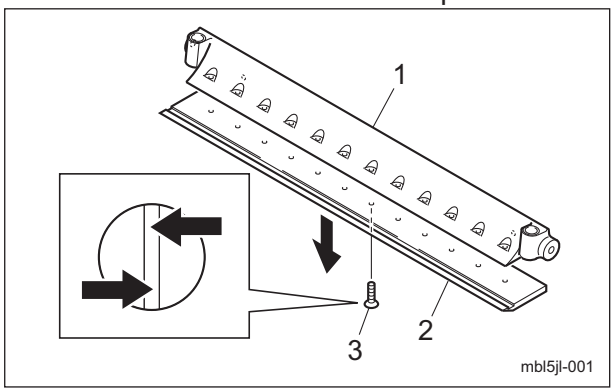

Removing The Bed Knife_001

1	Bed knife base
2	Bed knife
3	Screw

Installing The Bed Knife

Caution

Both the reel cutter (cutting cylinder) and the bed knife (bottom blade) are edged tools. Handle them carefully, since they could cut your hands and feet.

Caution

Raising the front part of the machine for servicing operation may create a falling hazard.
Support the machine securely.

Caution

See the list in Tightening torques.
Note that the Baroness product warranty may not apply to defects caused by incorrect or overtorque tightening etc.

Important

Be sure not to scratch the bed knife base surface where the bed knife shall be mounted. Remove rust and dust.

Important

Replace the old screws with new ones.

1. Tighten the screws uniformly with a hammer driver.

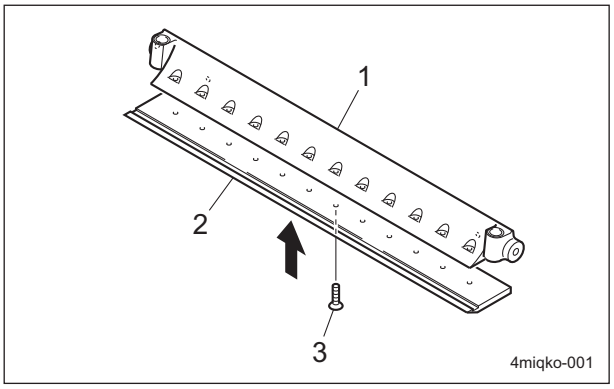

Installing The Bed Knife_001

1	Bed knife base
2	Bed knife
3	Screw

https://truckmanualshub.com/

Note:
First, tighten the screw at the center. Then, follow the numerical order, first to the right and then to the left, as shown below.

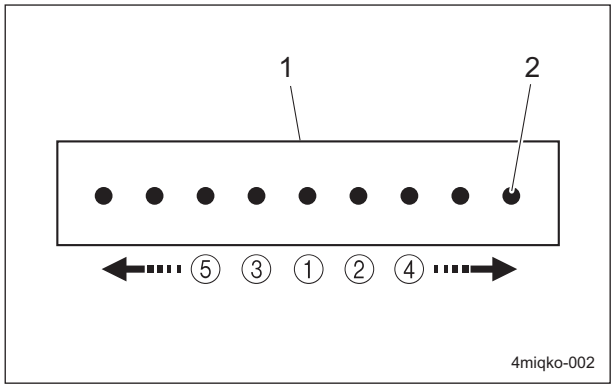

Installing The Bed Knife_002

1	Bed knife
2	Screw

Removing/Installing The Small Cover (Left)

Removing The Small Cover (Left)

1. Insert an item such as a wooden hammer handle into the reel cutter to prevent it from turning, and remove the lapping bolt, the disk spring, and the gear retainer collar.

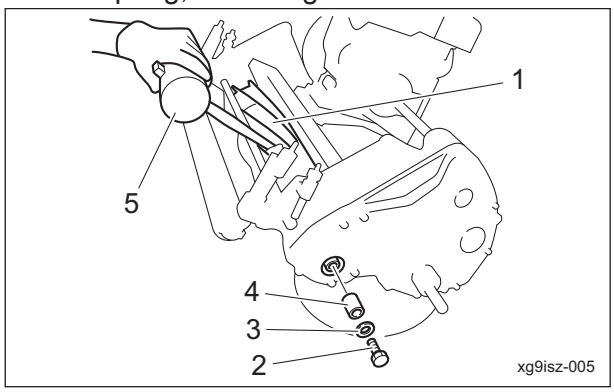

Removing The Small Cover (Left)_001

1	Reel cutter
2	Lapping bolt
3	Disk spring
4	Gear retainer collar
5	Wooden hammer

2. Unscrew the 4 bolts, and then detach the small cover (left).

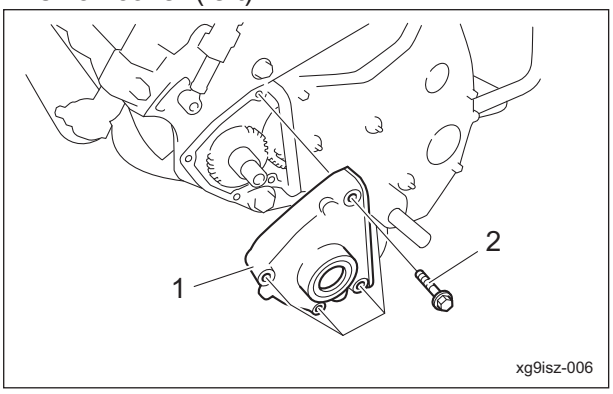

Removing The Small Cover (Left)_002

1	Small cover (left)
2	Bolt

Installing The Small Cover (Left)

Caution

See the list in Tightening torques.
Note that the Baroness product warranty may not apply to defects caused by incorrect or overtorque tightening etc.

1. Attach the small cover (left) temporarily to the frame with four bolts.

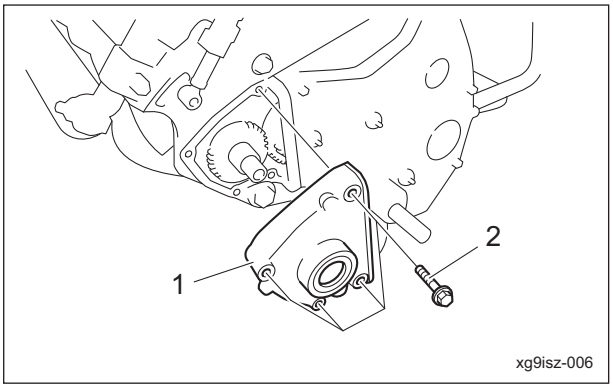

Installing The Small Cover (Left)_001

1	The small cover (left)
2	Bolt

Important

Be sure that there is no gap between the oil seal fitted in the small cover (left) and the gear retainer collar.

2. Install the gear retainer collar to the reel cutter shaft while adjusting the position of the small cover (left).
3. Tighten the 4 bolts which have temporarily been attached to the small cover (left).

https://truckmanualshub.com/

4. Insert an item such as a wooden hammer handle into the reel cutter to prevent it from turning, and install the disk spring and the lapping bolt.

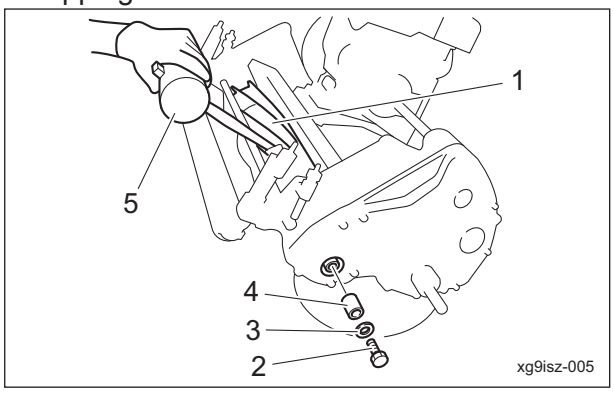

Installing The Small Cover (Left)_002

1	Reel cutter
2	Lapping bolt
3	Disk spring
4	Gear retainer collar
5	Wooden hammer

Maintenance (Main Body)

Adjustment of Brake

Danger

If the brake wire is cut, the machine will be unable to stop. This would be extremely dangerous.
If the brake wire is cracked or damaged, replace it with a new one immediately.

Danger

If the brake is not sufficiently effective when it has been applied, adjust the brake wire.

1. Adjust the brake by use of the brake wire adjusting nut.

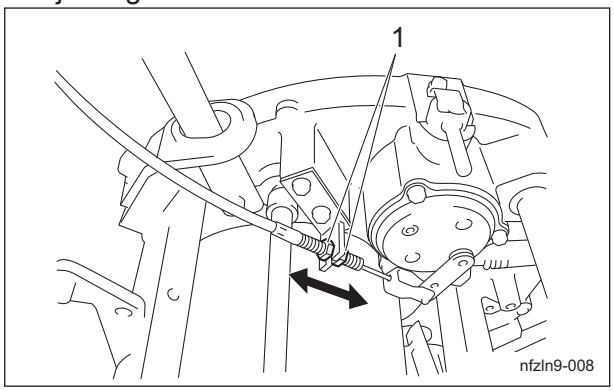

Adjustment of Brake_001

1	Adjusting nut

2. Make sure that the brake shoe does not touch the brake drum.
   Avoid the brake always being engaged.
   Note:
   The brake shoe may touch the brake drum if you hear a rubbing sound or the drum feels heavy when rotating the drum.

Adjustment of Engine Clutch

When reinstalling the engine:
Adjust the clearance between the engine clutch and clutch facing so that it will be approx. 0.5 - 1.0 mm (0.020 - 0.039 in) when gripping the main clutch lever.

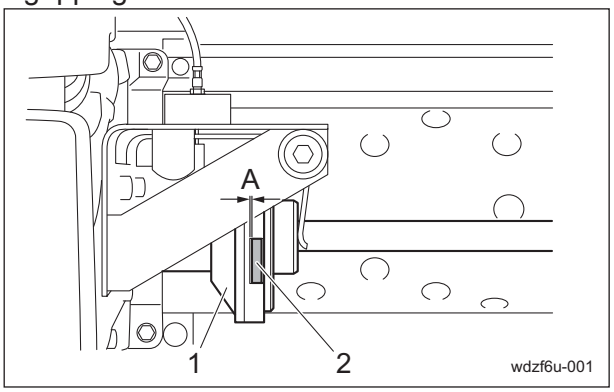

Adjustment of Engine Clutch_001

1	Engine clutch
2	Clutch facing
A	0.5 - 1.0 mm (0.020 - 0.039 in)

1. Loosen the 4 bolts securing the engine.
2. Insert a thickness gauge (accessory tool) from the front and rear of the clearance, make adjustment so that the front and rear clearances will be the same distance, and then retighten the bolts A.

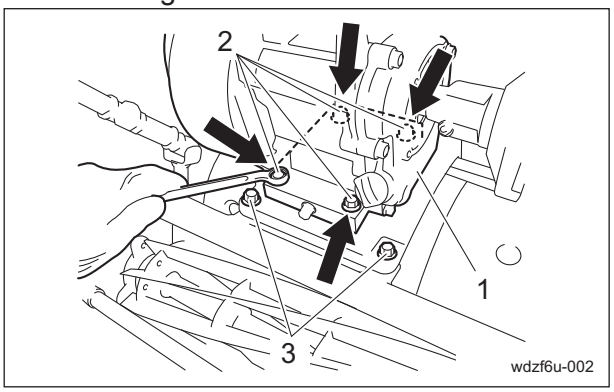

Adjustment of Engine Clutch_002

https://truckmanualshub.com/

1	Engine
2	Bolt A
3	Bolt B

When adjusting the clutch wire:
Make adjustment so that the operation distance of the clutch plate between gripping and releasing the main clutch lever will be 1.0 - 2.0 mm (0.039 - 0.079 in).

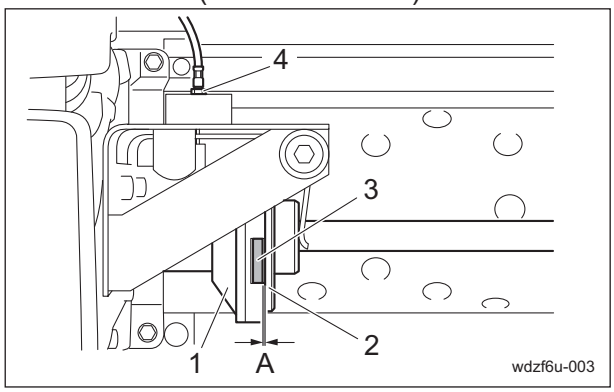

Adjustment of Engine Clutch_003

1	Engine clutch
2	Clutch plate
3	Clutch facing
4	Clutch wire adjusting nut
A	1.0 - 2.0 mm (0.039 - 0.079 in)

When adjusting the clutch spring:
Make adjustment so that the total length of the spring will be 61.0 mm (2.40 in) when the main clutch lever set in the ON position.
Note:
The factory default setting of the spring total length is 61.0 mm (2.40 in).
The longer the spring is set, the lighter clutch handling is provided. The shorter, the heavier.

1. Loosen the lock nut and adjust the spring total length with the spring adjustment nut.
2. Confirm that there is no engine clutch slipping when the main clutch lever set in the ON position.

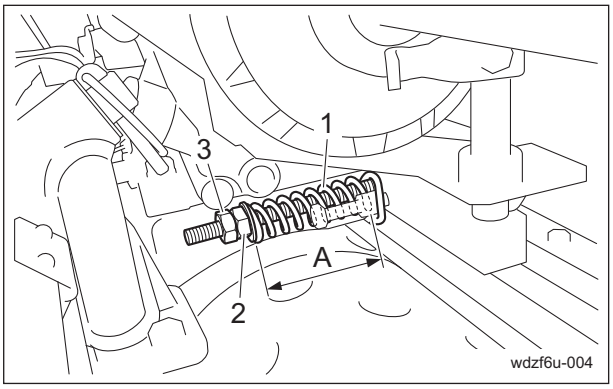

Adjustment of Engine Clutch_004

1	Clutch spring
2	Spring adjustment nut
3	Lock nut
A	61.0 mm (2.40 in)

Change of Air Cleaner

For details on handling the engine, please refer to the Engine's Owner's Manual.
A contaminated air cleaner element may cause malfunction of the engine.
To maximize the life of the engine, replace the air cleaner element at the appropriate times.

1. The timing for replacing the air cleaner element is described below.
   [1] Replace the air cleaner element in accordance with the Maintenance Schedule.
   [2] If it is significantly contaminated, replace it, even if the hours of operation do not exceed the specified time.
2. Replace the air cleaner element in the same manner as cleaning the air cleaner.
   "Cleaning of Air Cleaner" (Page 4-4)

https://truckmanualshub.com/

Replacement of Engine Oil

For details on handling the engine, please refer to the Owner's Manual for the engine.

Warning

When changing the engine oil, be sure to drain it into a container and discard it in accordance with local laws and regulations.

Caution

Be careful with hot oil, which could cause burns if it contacts your skin.

Important

Be sure to use engine oil that is classified as API Service Grade SE or higher, with an SAE viscosity that is appropriate for the operating environment (ambient temperature).

Important

Securely tighten the oil level gauge.

Change the engine oil more frequently if it is contaminated and especially if you use the machine in dusty areas or operate the engine at high loads or in high temperatures.

1. Move the machine onto a level surface, and then stop the engine.
2. Remove the drain plug while the engine oil is warm, and then drain the oil into a container.
3. Re-place the drain plug on the engine.
4. Remove the oil level gauge.
5. Supply new engine oil through the oil filling port.
   The engine oil quantity is 0.56 dm^3 (0.56 L).
6. Position the machine so that the engine is level, and then check the engine oil level without tightening the oil level gauge in the oil filling port.

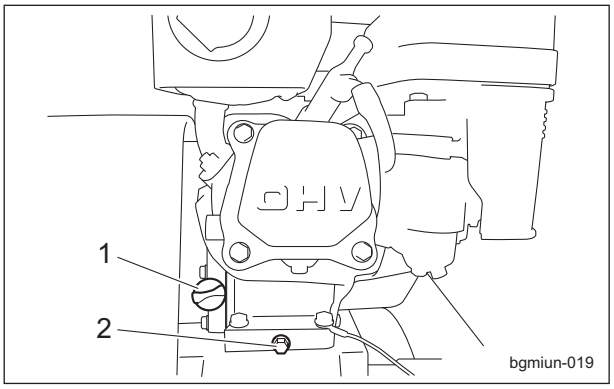

Replacement of Engine Oil_001

1	Oil level gauge (oil filling port)
2	Drain plug

7. After checking the oil level with the oil level gauge, add more engine oil if it is insufficient.
8. Securely tighten the oil level gauge.

Long-Term Storage

Before Long-Term Storage

- Remove any dirt, grass, debris, or oil stains completely.
- Supply oil and apply grease to appropriate parts.

https://truckmanualshub.com/

Troubleshooting Procedures of Aftercut Appearance

Scalping

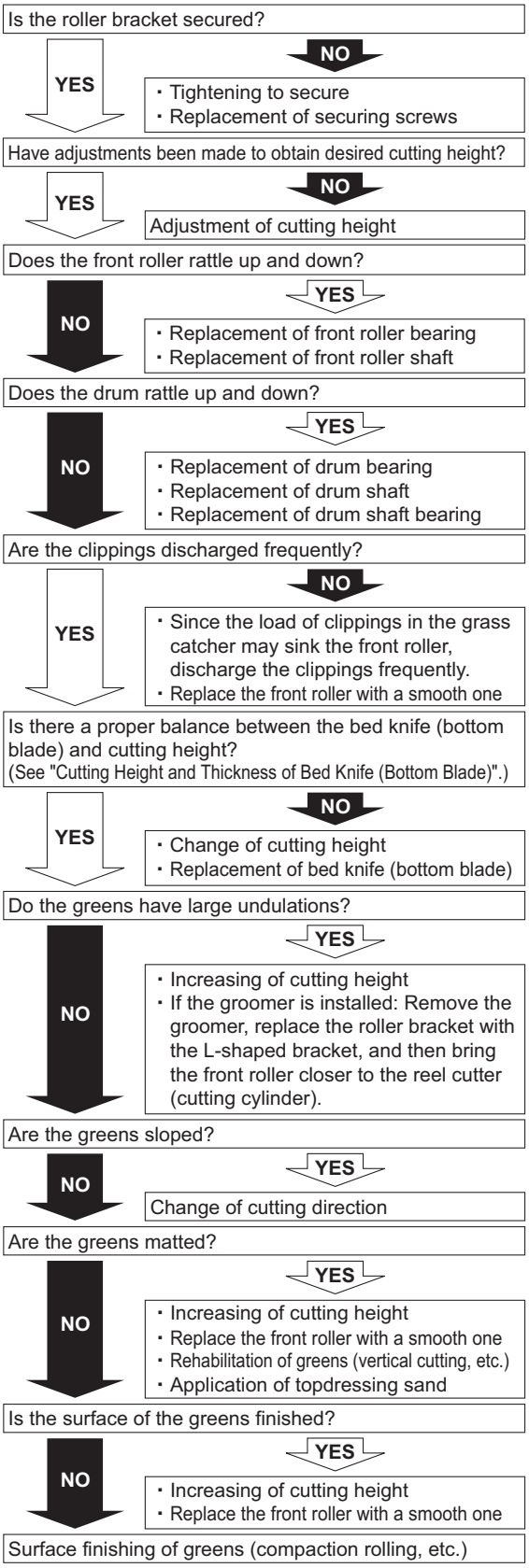

iuwt3m-004E

Scalping_001

Angled Mismatch

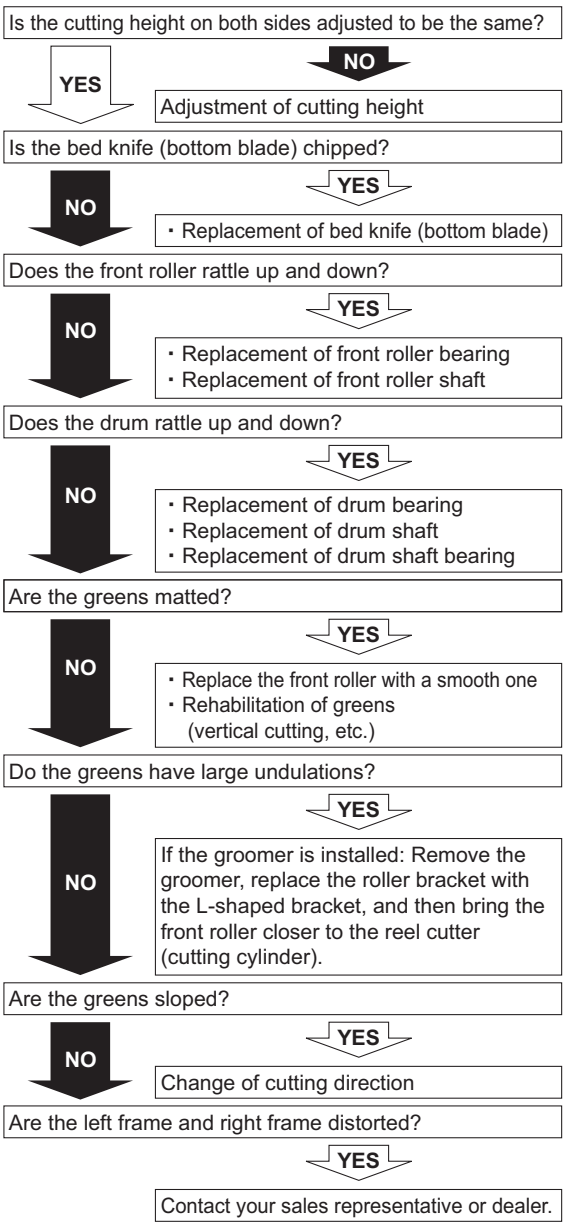

7x9s4e-001E

Angled Mismatch_001

https://truckmanualshub.com/

Overlap Marks

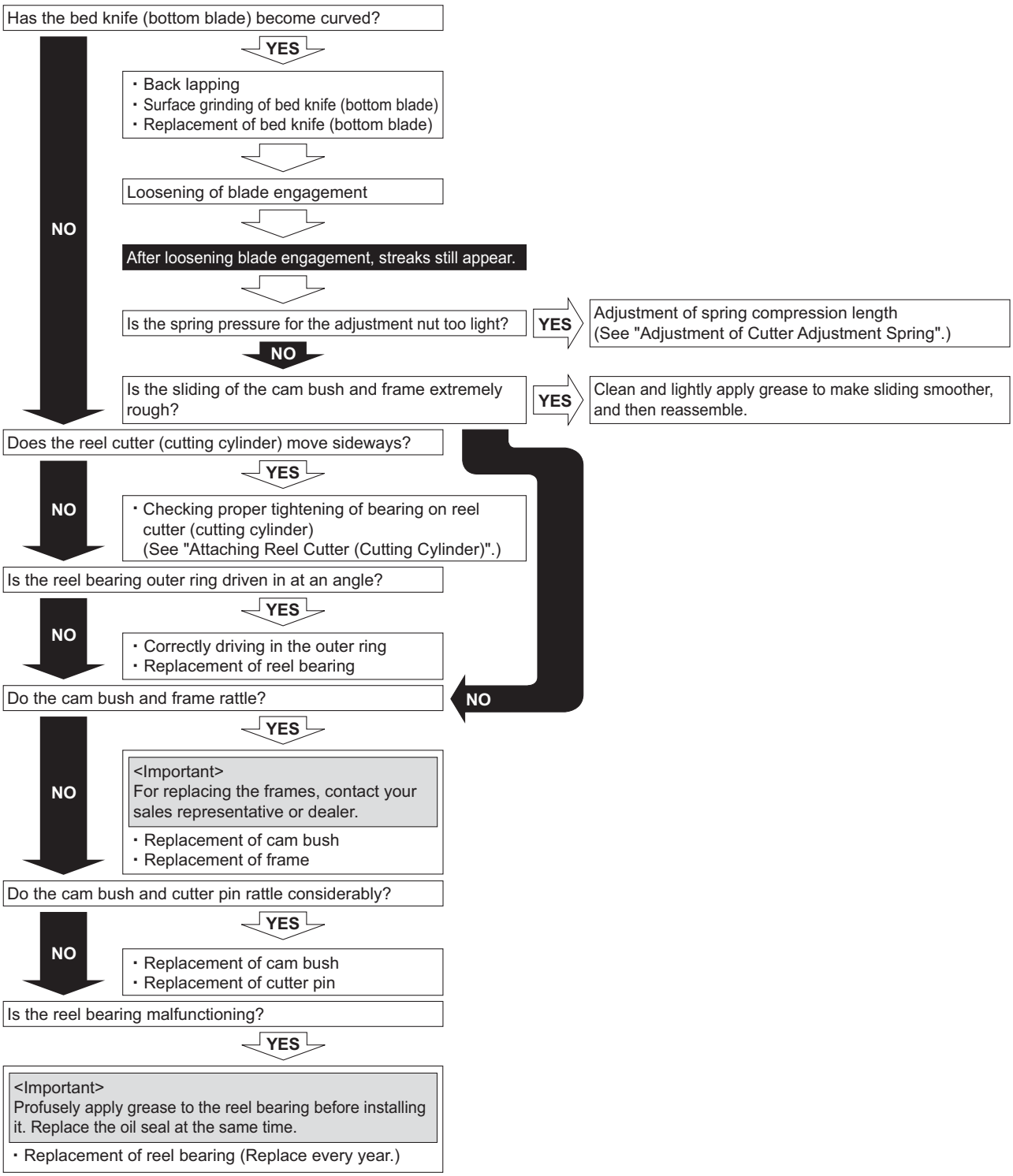

or58dr-003E

Overlap Marks_001

https://truckmanualshub.com/

Blade does not cut

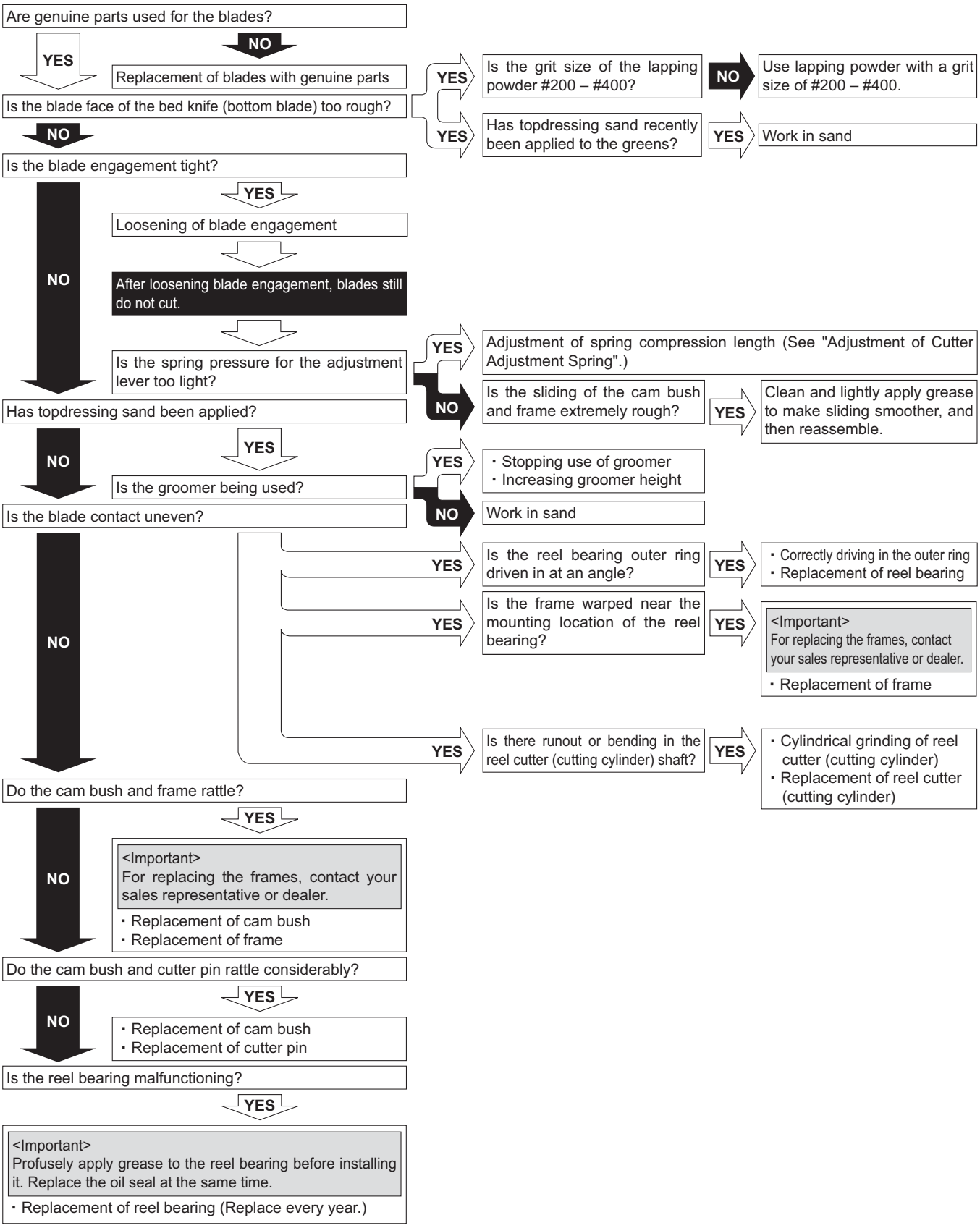

t3iz9v-002E

Blade does not cut_001

https://truckmanualshub.com/

Uneven Blade Engagement

The unevenness is a difference of tightening torque between the left and right cutter adjustment nuts, or blade engagement on only one side, which cannot be adjusted.
Promptly resolve the issue in order to maintain the optimum performance of the machine.

Cause of unevenness	Measure to resolve
Asymmetrical wear of reel cutter (cutting cylinder)	Cylindrical grinding of reel cutter (cutting cylinder) Replacement of reel cutter (cutting cylinder)
Asymmetrical wear of bed knife (bottom blade)	Surface grinding of bed knife (bottom blade) Replacement of bed knife (bottom blade)
Distortion of frames	Rearrange frames in parallel

Important

Depending on the extent of the symptoms, they may not be resolved.

Important

Performing temporary measures may cause the symptoms to progress, resulting in cutting issues.

Temporary measures:

- Adjustment with cam bushes
  "Adjusting CAM" (Page 5-8)
- Adjustment of spring pressure
  "Adjustment of Cutter Adjustment Spring" (Page 5-8)

https://truckmanualshub.com/

https://truckmanualshub.com/

BARONESS
Quality on Demand

EU Declaration of Conformity

Product Identification

Product :		Lawnmower		
Make :		BARONESS		
Type :		LM56		
Version(s) :		GC		
Starting Serial No. :		**35031**		
Measured Sound Power Level :		LWA	96.24	dB
Guaranteed Sound Power Level :		LWA	98	dB
Manufacturer	Name :	Kyoeisha Co., Ltd.		
	Address :	1-26 Miyuki-cho, Toyokawa, Aichi-pref.,Japan		

Conforms to the following Directives

2006/42/EC	Machinery (MD)
2014/30/EU	Electromagnetic compatability (EMC)
2000/14/EC	Noise emissions from outdoor equipment

We has been designed and manufactured using the following specifications

ISO 12100 : 2010 (2006/42/EC)
ISO 5395-1 : 2013 (2006/42/EC)
ISO 5395-2 : 2013 (2006/42/EC)
ISO 14982 :1998 (2014/30/EU)

Technical Documentation

Keeper's Name :	Kyoeisha Co., Ltd.
Keeper's Address :	1-26 Miyuki-cho, Toyokawa, Aichi-pref.,Japan

Compiler of the technical file (2006/42/EC)

Name:	Kyoeisha U.K.Ltd.
Address:	Unit 5 Hatch Industrial Park Grewell Road,Basingstke Hampshire RG24 7NG, the United Kingdom

Conformity assessment procedures

Internal production control : Module A (2006/42/EC)
EC-type examination : Module B (2014/30/EU)
Internal control of production with assessment of technical documentation and periodical checking (2000/14/EC)

Involved Notified Body (2000/14/EC)

Name :	SNCH
Address :	11, Route de Sandweiler 5230 Sandweiler Luxembourg
Certificate / Technical Documentation No. :	SNCH*2000/14*2005/88*0302*07/TCLM56-07

Place : Japan
Date : 18 April 2018 (18 / 4 / 2018)

Signature : Kimiya Kaneko
Name : Kimiya Kaneko
Position : Quality Dept. Manager

(fr)

Déclaration de conformité UE

Identification du produit

Produit :		Tondeuse à gazon		
Fabriquant :		BARONESS		
Type :		LM56		
Version(s) :		GC		
Numéro de série de début :		**35031**		
Niveau de puissance acoustique mesuré :		LwA	96.24	dB
Niveau de puissance acoustique garanti :		LwA	98	dB
Fabricant	Nom :	Kyoeisha Co., Ltd.		
	Adresse :	1-26, Miyuki-cho, Toyokawa, préfecture d'Aichi, Japon		

Conforme aux directives suivantes :

2006/42/CE	Machine (MD)
2014/30/UE	Compatibilité électromagnétique (CEM)
2000/14/CE	Émissions sonores de l'équipement de plein air

Conception et fabrication en respect des spécifications suivantes :

ISO 12100 : 2010 (2006/42/CE)
ISO 5395-1 : 2013 (2006/42/CE)
ISO 5395-2 : 2013 (2006/42/CE)
ISO 14982 :1998 (2014/30/UE)

Fiche technique

Marque :	Kyoeisha Co., Ltd.
Adresse de la marque :	1-26, Miyuki-cho, Toyokawa, préfecture d'Aichi, Japon

Compilateur de la fiche technique (2006/42/CE)

Nom :	Kyoeisha U.K. Ltd.
Adresse :	Unit 5 Hatch Industrial Park Greywell Road, Basingstoke Hampshire RG24 7NG, Royaume-Uni

Procédures d'évaluation de la conformité

Contrôle de production interne : module A (2006/42/CE)
Examen de type CE : module B (2014/30/UE)
Contrôle interne de la production avec évaluation de la fiche technique et vérification périodique (2000/14/CE)

Organisme notifié impliqué (2000/14/CE)

Nom :	SNCH
Adresse :	11, Route de Sandweiler 5230 Sandweiler, Luxembourg
N° de certificat/Documentation technique :	SNCH*2000/14*2005/88*0302*07/TCLM56-07

https://truckmanualshub.com/

(es)

Declaración de conformidad de la UE

Identificación del producto

Producto:		Cortacésped		
Marca:		BARONESS		
Tipo:		LM56		
Versión:		GC		
N.º de serie inicial:		**35031**		
Nivel de potencia sonora medido:		LWA	96.24	dB
Nivel de potencia sonora garantizado:		LWA	98	dB
Fabricante	Nombre:	Kyoeisha Co., Ltd.		
	Dirección:	1-26 Miyuki-cho, Toyokawa, Aichi-pref., Japón		

Cumple las siguientes Directivas

2006/42/CE	Maquinaria (MD)
2014/30/UE	Compatibilidad electromagnética (EMC)
2000/14/CE	Emisiones sonoras de máquinas de uso al aire libre

Se ha diseñado y fabricado utilizando las siguientes especificaciones

ISO 12100 : 2010 (2006/42/CE)
ISO 5395-1 : 2013 (2006/42/CE)
ISO 5395-2 : 2013 (2006/42/CE)
ISO 14982 :1998 (2014/30/UE)

Documentación técnica

Nombre del responsable:	Kyoeisha Co., Ltd.
Dirección del responsable:	1-26 Miyuki-cho, Toyokawa, Aichi-pref., Japón

Compilador del archivo técnico (2006/42/CE)

Nombre:	Kyoeisha U.K. Ltd.
Dirección:	Unit 5 Hatch Industrial Park Greywell Road, Basingstoke Hampshire RG24 7NG, Reino Unido

Procedimientos de evaluación de conformidad

Control de fabricación interno: Módulo A (2006/42/CE)
Examen de tipo CE: Módulo B (2014/30/UE)
Control interno de fabricación con evaluación de documentación técnica y comprobaciones periódicas (2000/14/CE)

Organismo notificado implicado (2000/14/CE)

Nombre:	SNCH
Dirección:	11, Route de Sandweiler 5230 Sandweiler Luxemburgo
Certificado/Documentación técnica n.º:	SNCH*2000/14*2005/88*0302*07/TCLM56-07

(de)

EU-Konformitätserklärung

Produktbeschreibung

Produkt:		Rasenmäher		
Marke:		BARONESS		
Modell:		LM56		
Version(en):		GC		
Startseriennummer:		**35031**		
Gemessener Schallleistungspegel:		LWA	96.24	dB
Garantierter Schallleistungspegel:		LWA	98	dB
Hersteller	Name:	Kyoeisha Co., Ltd.		
	Adresse:	1-26 Miyuki-cho, Toyokawa, Aichi-pref.,Japan		

Entspricht den folgenden Richtlinien

2006/42/EG	Maschinenrichtlinie
2014/30/EU	Elektromagnetische Verträglichkeit (EMV)
2000/14/EG	Geräuschemission von im Freien betriebenen Geräten

Unter Anwendung der folgenden Bestimmungen entwickelt und hergestellt

ISO 12100 : 2010 (2006/42/EG)
ISO 5395-1 : 2013 (2006/42/EG)
ISO 5395-2 : 2013 (2006/42/EG)
ISO 14982 :1998 (2014/30/EU)

Technische Dokumentation

Name des Halters	Kyoeisha Co., Ltd.
Adresse des Halters	1-26 Miyuki-cho, Toyokawa, Aichi-pref.,Japan

Technische Unterlagen erstellt von (2006/42/EG)

Name:	Kyoeisha U.K.Ltd.
Adresse:	Unit 5 Hatch Industrial Park Grewell Road,Basingstoke Hampshire RG24 7NG, Großbritannien

Konformitätsbewertungsverfahren

Interne Produktionskontrolle : Modul A (2006/42/EG)
EG-Baumusterprüfung : Modul B (2014/30/EU)
Interne Produktionskontrolle mit Bewertung der technischen Unterlagen und regelmäßiger Überprüfung (2000/14/EG)

Beteiligte benannte Stelle (2000/14/EG)

Name:	SNCH
Adresse :	11, Route de Sandweiler 5230 Sandweiler Luxemburg
Bescheinigung/Technische Dokumentation Nr. :	SNCH*2000/14*2005/88*0302*07/TCLM56-07

https://truckmanualshub.com/

(sv)

EU-försäkran om överensstämmelse

Produktidentifikation

Produkt :		Gräsklippare		
Märke:		BARONESS		
Typ:		LM56		
Version(er):		GC		
Serienummer startar på:		**35031**		
Uppmätt ljudeffektnivå:		LwA	96.24	dB
Garanterad ljudeffektnivå:		LwA	98	dB
Tillverkare	Namn:	Kyoeisha Co., Ltd.		
	Adress:	1-26 Miyuki-cho, Toyokawa, Aichi-pref., Japan		

Uppfyller följande direktiv

2006/42/EG	Maskindirektivet
2014/30/EU	Elektromagnetisk kompabilitet (EMC)
2000/14/EG	Bulleremission från utomhusutrustning

Följande kravspecifikationer har följts vid konstruktion och tillverkning

ISO 12100 : 2010 (2006/42/EG)
ISO 5395-1 : 2013 (2006/42/EG)
ISO 5395-2 : 2013 (2006/42/EG)
ISO 14982 : 1998 (2014/30/EU)

Teknisk dokumentation

Innehavarens namn:	Kyoeisha Co., Ltd.
Innehavarens adress:	1-26 Miyuki-cho, Toyokawa, Aichi-pref., Japan

Den tekniska filen(2006/42/EG) har tagits fram av

Namn:	Kyoeisha U.K.Ltd.
Adress:	Unit 5 Hatch Industrial Park Grewell Road, Basingstoke Hampshire RG24 7NG, Storbritannien

Förfarande för bedömning av överensstämmelse

Intern produktionskontroll: Modul A (2006/42/EG)
EG-typprovning: Modul B (2014/30/EU)
Intern kontroll av produktion med fastställande av teknisk dokumentation och periodiska kontroller (2000/14/EG)

Anmält organ (2000/14/EG)

Namn:	SNCH
Adress:	11, Route de Sandweiler 5230 Sandweiler Luxembourg
Certifikat/Teknisk dokumentation nummer:	SNCH*2000/14*2005/88*0302*07/TCLM56-07

https://truckmanualshub.com/

BARONESS
Quality on Demand

EU Declaration of Conformity

Product Identification

Product :	Lawnmower		
Make :	BARONESS		
Type :	LM66		
Version(s) :	TC		
Starting Serial No. :	**35001**		
Measured Sound Power Level :	LWA	95.42	dB
Guaranteed Sound Power Level :	LWA	98	dB
Manufacturer Name :	Kyoeisha Co., Ltd.		
Address :	1-26 Miyuki-cho, Toyokawa, Aichi-pref.,Japan		

Conforms to the following Directives

2006/42/EC	Machinery (MD)
2014/30/EU	Electromagnetic compatability (EMC)
2000/14/EC	Noise emissions from outdoor equipment

We has been designed and manufactured using the following specifications

ISO 12100 : 2010 (2006/42/EC)
ISO 5395-1 : 2013 (2006/42/EC)
ISO 5395-2 : 2013 (2006/42/EC)
ISO 14982 :1998 (2014/30/EU)

Technical Documentation

Keeper's Name :	Kyoeisha Co., Ltd.
Keeper's Address :	1-26 Miyuki-cho, Toyokawa, Aichi-pref.,Japan

Compiler of the technical file (2006/42/EC)

Name:	Kyoeisha U.K.Ltd.
Address:	Unit 5 Hatch Industrial Park Grewell Road,Basingstke Hampshire RG24 7NG, the United Kingdom

Conformity assessment procedures

Internal production control : Module A (2006/42/EC)
EC-type examination : Module B (2014/30/EU)
Internal control of production with assessment of technical documentation and periodical checking (2000/14/EC)

Involved Notified Body (2000/14/EC)

Name :	SNCH
Address :	11, Route de Sandweiler 5230 Sandweiler Luxembourg
Certificate / Technical Documentation No. :	SNCH*2000/14*2005/88*1258*04/TCLM66-04

Place : Japan
Date : 18 April 2018 (18 / 4 / 2018)

Signature : Kimiya Kaneko
Name : Kimiya Kaneko
Position : Quality Dept. Manager

(fr)

Déclaration de conformité UE

Identification du produit

Produit :	Tondeuse à gazon		
Fabriquant :	BARONESS		
Type :	LM66		
Version(s) :	TC		
Numéro de série de début :	**35001**		
Niveau de puissance acoustique mesuré :	LwA	95.42	dB
Niveau de puissance acoustique garanti :	LwA	98	dB
Fabricant Nom :	Kyoeisha Co., Ltd.		
Adresse :	1-26, Miyuki-cho, Toyokawa, préfecture d'Aichi, Japon		

Conforme aux directives suivantes :

2006/42/CE	Machine (MD)
2014/30/UE	Compatibilité électromagnétique (CEM)
2000/14/CE	Émissions sonores de l'équipement de plein air

Conception et fabrication en respect des spécifications suivantes :

ISO 12100 : 2010 (2006/42/CE)
ISO 5395-1 : 2013 (2006/42/CE)
ISO 5395-2 : 2013 (2006/42/CE)
ISO 14982 :1998 (2014/30/UE)

Fiche technique

Marque :	Kyoeisha Co., Ltd.
Adresse de la marque :	1-26, Miyuki-cho, Toyokawa, préfecture d'Aichi, Japon

Compilateur de la fiche technique (2006/42/CE)

Nom :	Kyoeisha U.K. Ltd.
Adresse :	Unit 5 Hatch Industrial Park Greywell Road, Basingstoke Hampshire RG24 7NG, Royaume-Uni

Procédures d'évaluation de la conformité

Contrôle de production interne : module A (2006/42/CE)
Examen de type CE : module B (2014/30/UE)
Contrôle interne de la production avec évaluation de la fiche technique et vérification périodique (2000/14/CE)

Organisme notifié impliqué (2000/14/CE)

Nom :	SNCH
Adresse :	11, Route de Sandweiler 5230 Sandweiler, Luxembourg
N° de certificat/Documentation technique :	SNCH*2000/14*2005/88*1258*04/TCLM66-04

https://truckmanualshub.com/

(es)

Declaración de conformidad de la UE

Identificación del producto

Producto:		Cortacésped		
Marca:		BARONESS		
Tipo:		LM66		
Versión:		TC		
N.º de serie inicial:		**35001**		
Nivel de potencia sonora medido:		LWA	95.42	dB
Nivel de potencia sonora garantizado:		LWA	98	dB
Fabricante	Nombre:	Kyoeisha Co., Ltd.		
	Dirección:	1-26 Miyuki-cho, Toyokawa, Aichi-pref., Japón		

Cumple las siguientes Directivas

2006/42/CE	Maquinaria (MD)
2014/30/UE	Compatibilidad electromagnética (EMC)
2000/14/CE	Emisiones sonoras de máquinas de uso al aire libre

Se ha diseñado y fabricado utilizando las siguientes especificaciones

ISO 12100 : 2010 (2006/42/CE)
ISO 5395-1 : 2013 (2006/42/CE)
ISO 5395-2 : 2013 (2006/42/CE)
ISO 14982 :1998 (2014/30/UE)

Documentación técnica

Nombre del responsable:	Kyoeisha Co., Ltd.
Dirección del responsable:	1-26 Miyuki-cho, Toyokawa, Aichi-pref., Japón

Compilador del archivo técnico (2006/42/CE)

Nombre:	Kyoeisha U.K. Ltd.
Dirección:	Unit 5 Hatch Industrial Park Greywell Road, Basingstoke Hampshire RG24 7NG, Reino Unido

Procedimientos de evaluación de conformidad

Control de fabricación interno: Módulo A (2006/42/CE)
Examen de tipo CE: Módulo B (2014/30/UE)
Control interno de fabricación con evaluación de documentación técnica y comprobaciones periódicas (2000/14/CE)

Organismo notificado implicado (2000/14/CE)

Nombre:	SNCH
Dirección:	11, Route de Sandweiler 5230 Sandweiler Luxemburgo
Certificado/Documentación técnica n.º:	SNCH*2000/14*2005/88*1258*04/TCLM66-04

(de)

EU-Konformitätserklärung

Produktbeschreibung

Produkt:		Rasenmäher		
Marke:		BARONESS		
Modell:		LM66		
Version(en):		TC		
Startseriennummer:		**35001**		
Gemessener Schallleistungspegel:		LWA	95.42	dB
Garantierter Schallleistungspegel:		LWA	98	dB
Hersteller	Name:	Kyoeisha Co., Ltd.		
	Adresse:	1-26 Miyuki-cho, Toyokawa, Aichi-pref.,Japan		

Entspricht den folgenden Richtlinien

2006/42/EG	Maschinenrichtlinie
2014/30/EU	Elektromagnetische Verträglichkeit (EMV)
2000/14/EG	Geräuschemission von im Freien betriebenen Geräten

Unter Anwendung der folgenden Bestimmungen entwickelt und hergestellt

ISO 12100 : 2010 (2006/42/EG)
ISO 5395-1 : 2013 (2006/42/EG)
ISO 5395-2 : 2013 (2006/42/EG)
ISO 14982 :1998 (2014/30/EU)

Technische Dokumentation

Name des Halters	Kyoeisha Co., Ltd.
Adresse des Halters	1-26 Miyuki-cho, Toyokawa, Aichi-pref.,Japan

Technische Unterlagen erstellt von (2006/42/EG)

Name:	Kyoeisha U.K.Ltd.
Adresse:	Unit 5 Hatch Industrial Park Grewell Road,Basingstoke Hampshire RG24 7NG, Großbritannien

Konformitätsbewertungsverfahren

Interne Produktionskontrolle : Modul A (2006/42/EG)
EG-Baumusterprüfung : Modul B (2014/30/EU)
Interne Produktionskontrolle mit Bewertung der technischen Unterlagen und regelmäßiger Überprüfung (2000/14/EG)

Beteiligte benannte Stelle (2000/14/EG)

Name:	SNCH
Adresse :	11, Route de Sandweiler 5230 Sandweiler Luxemburg
Bescheinigung/Technische Dokumentation Nr. :	SNCH*2000/14*2005/88*1258*04/TCLM66-04

https://truckmanualshub.com/

(sv)

EU-försäkran om överensstämmelse

Produktidentifikation

Produkt :		Gräsklippare		
Märke:		BARONESS		
Typ:		LM66		
Version(er):		TC		
Serienummer startar på:		**35001**		
Uppmätt ljudeffektnivå:		LwA	95.42	dB
Garanterad ljudeffektnivå:		LwA	98	dB
Tillverkare	Namn:	Kyoeisha Co., Ltd.		
	Adress:	1-26 Miyuki-cho, Toyokawa, Aichi-pref., Japan		

Uppfyller följande direktiv

2006/42/EG	Maskindirektivet
2014/30/EU	Elektromagnetisk kompabilitet (EMC)
2000/14/EG	Bulleremission från utomhusutrustning

Följande kravspecifikationer har följts vid konstruktion och tillverkning

ISO 12100 : 2010 (2006/42/EG)
ISO 5395-1 : 2013 (2006/42/EG)
ISO 5395-2 : 2013 (2006/42/EG)
ISO 14982 : 1998 (2014/30/EU)

Teknisk dokumentation

Innehavarens namn:	Kyoeisha Co., Ltd.
Innehavarens adress:	1-26 Miyuki-cho, Toyokawa, Aichi-pref., Japan

Den tekniska filen(2006/42/EG) har tagits fram av

Namn:	Kyoeisha U.K.Ltd.
Adress:	Unit 5 Hatch Industrial Park Grewell Road, Basingstoke Hampshire RG24 7NG, Storbritannien

Förfarande för bedömning av överensstämmelse

Intern produktionskontroll: Modul A (2006/42/EG)
EG-typprovning: Modul B (2014/30/EU)
Intern kontroll av produktion med fastställande av teknisk dokumentation och periodiska kontroller (2000/14/EG)

Anmält organ (2000/14/EG)

Namn:	SNCH
Adress:	11, Route de Sandweiler 5230 Sandweiler Luxembourg
Certifikat/Teknisk dokumentation nummer:	SNCH*2000/14*2005/88*1258*04/TCLM66-04

https://truckmanualshub.com/

BARONESS®

Quality on Demand

KYOEISHA CO.,LTD.

Head Office 1-26, Miyuki-cho, Toyokawa, Aichi-Pref. 442-8530 Japan. Tel :(0533) 84-1390 Fax:(0533) 89-3623

LM56GC--UM--GBZ/18D-00-S.K
E02[LM56_EU02/LM66_EU02]