U.S.A. : **KUBOTA TRACTOR CORPORATION**
3401 Del Amo Blvd., Torrance, CA 90503, U.S.A.
Telephone : (310)370-3370
Western Division : 1175 S. Guild Avc., Lodi, CA 95240
Telephone : (209)334-9910
Central Division : 14855 FAA Blvd., Fort Worth, TX 76155
Telephone : (817)571-0900
Northern Division : 6300 at One Kubota Way, Groveport, OH 43125
Telephone : (614)835-1100
Southeast Division : 1025 Northbrook Parkway, Suwanee, GA 30024
Telephone : (770)995-8855

Canada : **KUBOTA CANADA LTD.**
5900 14th Avenue, Markham, Ontario, L3S 4K4, Canada
Telephone : (905)294-7477

France : **KUBOTA EUROPE S.A.S**
19-25, Rue Jules Vercruysse, Z.I. BP88, 95101 Argenteuil Cedex, France
Telephone : (33)1-3426-3434

Italy : **KUBOTA EUROPE S.A.S Italy Branch**
Via Grandi, 29 20068 Peschiera Borrome (MI) Italy
Telephone : (39)02-51650377

Germany : **KUBOTA (DEUTSCHLAND) GmbH**
Senefelder Str. 3-5 63110 Rodgau /Nieder-Roden, Germany
Telephone : (49)6106-873-0

U.K. : **KUBOTA (U.K.) LTD.**
Dormer Road, Thame, Oxfordshire, OX9 3UN, U.K.
Telephone : (44)1844-214500

Spain : **KUBOTA ESPAÑA S.A.**
Avenida Recomba No.5, Poligno Industrial la Laguna, Leganes, 28914 (Madrid) Spain
Telephone : (34)91-508-6442

Australia : **KUBOTA TRACTOR AUSTRALIA PTY LTD.**
25-29 Permas Way, Truganina, VIC 3029, Australia
Telephone : (61)-3-9394-4400

Malaysia : **SIME KUBOTA SDN. BHD.**
No.3 Jalan Sepadu 25/123 Taman Perindustrian Axis,
Seksyen 25, 40400 Shah Alam, Selangor Darul Ehsan Malaysia
Telephone : (60)3-736-1388

Philippines : **KUBOTA PHILIPPINES, INC.**
232 Quirino Highway, Baesa, Quezon City 1106, Philippines
Telephone : (63)2-422-3500

Taiwan : **SHIN TAIWAN AGRICULTURAL MACHINERY CO., LTD.**
16, Fengping 2nd Rd, Taliao Shiang Kaohsiung 83107, Taiwan R.O.C.
Telephone : (886)7-702-2333

Indonesia : **PT KUBOTA MACHINERY INDONESIA**
Tower A at EightyEight@Kasablanka Lantai 16
Jalan Raya Casablanka Kav. 88, Jakarta 12870 Indonesia
Telephone : (62)-21-29568-720

Thailand : **SIAM KUBOTA CORPORATION CO., LTD.**
101/19-24 Moo 20, Navanakorn Industrial Estate, Tambon Khlongnueng, Amphur Khlongluang,
Pathumthani 12120, THAILAND
Telephone : (66)2-909-0300

Korea : **KUBOTA KOREA CO., LTD.**
41-27, Jayumuyeok-gil, Baeksan-myeon, Gimje-si, Jeollabuk-do, Korea
Telephone : (82)-63-544-5822

India : **KUBOTA AGRICULTURAL MACHINERY INDIA PVT. LTD.**
No.15, Medavakkam Road, Sholinganallur, Chennai-600119, T.N., India
Telephone : (91)44-6104-1500

Vietnam : **KUBOTA VIETNAM CO., LTD.**
Lot B-3A2-CN, My Phuoc 3 Industrial Park, Ben Cat District, Binh Duong Province, Vietnam
Telephone : (84)-650-3577-507

KUBOTA Corporation

English, French (Canada)
Code No. K3312-6293-2
N° de code.

GF1800-R-2 . GF1800E-R-2

OPERATOR'S MANUAL
KUBOTA
FRONT MOUNT TRACTOR

MANUEL DE L'UTILISATEUR
KUBOTA
TRACTEUR A MONTAGE AVANT

MODELS GF1800-R-2
MODELES GF1800E-R-2

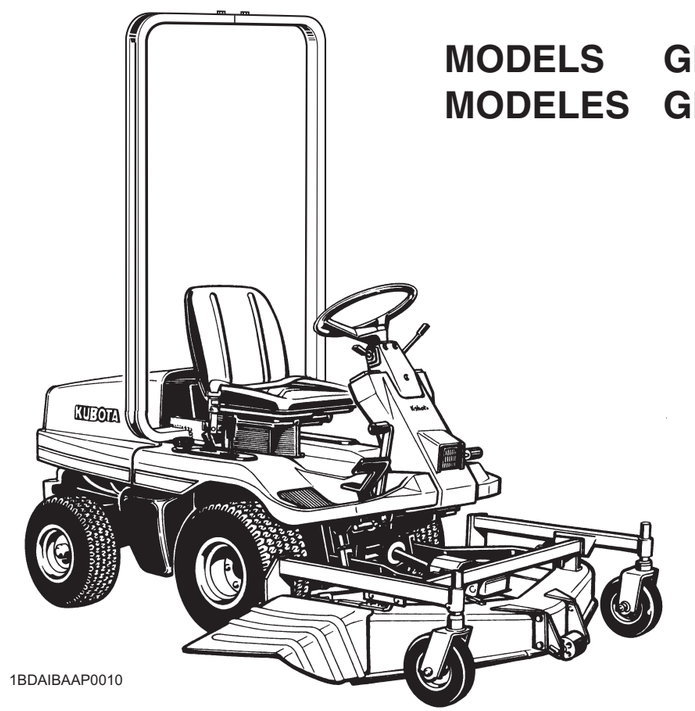

1BDAIBAAP0010

READ AND SAVE THIS BOOK
MANUEL A LIRE ET A CONSERVER

PRINTED IN JAPAN
IMPRIME AU JAPON

© KUBOTA Corporation 2014

ABBREVIATION LIST

Abbreviations	Definitions
2WD	Two Wheel Drive
4WD	Four Wheel Drive
API	American Petroleum Institute
ASABE	American Society of Agricultural and Biological Engineers, USA
ASTM	American Society for Testing and Materials, USA
HST	Hydrostatic Transmission
PT	Permanent Type (=Ethylene glycol anti-freeze)
PTO	Power Take Off
ROPS	Roll-Over Protective Structure
rpm	Revolutions Per Minute
r/s	Revolutions Per Second
SAE	Society of Automotive Engineers, USA
SPT	Semi-Permanent Type

California Proposition 65

⚠ WARNING ⚠

Engine exhaust, some of its constituents, certain vehicle components and fluids, contain or emit chemicals known to the State of California to cause cancer and birth defects or other reproductive harm.

KUBOTA Corporation is · · ·

Since its inception in 1890, KUBOTA Corporation has grown to rank as one of the major firms in Japan.
To achieve this status, the company has through the years diversified the range of its products and services to a remarkable extent, until today, 19 plants and 16,000 employees produce over 1,000 different items, large and small.
All these products and all the services which accompany them, however, are unified by one central commitment. KUBOTA makes products which, taken on a national scale, are basic necessities. Products which are indispensable, products intended to help individuals and nations fulfill the potential inherent in their environment. For KUBOTA is the Basic Necessities Giant.
This potential includes water supply, food from the soil and from the sea, industrial development, architecture and construction, transportation.
Thousands of people depend on KUBOTA's know-how, technology, experience and customer service. You too can depend on KUBOTA.

QUI EST KUBOTA Corporation · · ·

Depuis ses débuts en 1890,la Société KUBOTA Corporation s'est élevée au rang d'une des plus grandes entreprises du Japon. Pour arriver à ce stade, la société a pendant des années, diversifié la gamme de ses produits et de ses services, à tel point qu'elle dispose aujourd'hui de 19 usines, d'un effectif de 16000 employés et fabrique plus de 1000 produits différents, grands et petits.
Tous ces produits et les services qui en dépendent sont cependant reliés par une organisation centralisée.
La société KUBOTA fabrique des produits qui, pris à une échelle nationale sont des nécessités de base: produits indispensables, produits concus pour aider les hommes et leurs nations à tirer parti du potentiel inhérent à leur environnement. Pour cela, KUBOTA est le Géant des nécessités de base.
Ce potentiel inclut l'alimentation en eau, la production d'aliments à partir de la terre ou de la mer; le développement industriel, l'architecture et la construction, les transports.
Des milliers de personnes font confiance au savoir-faire, à la technologie, à l'expérience et au service après-vente de la société KUBOTA. Vous pouvez vous aussi nous faire confiance.

GF1800-R-2/GF1800E-R-2 (Canada)
AU . C . 3 - 3 . 0 . AK

FOREWORD

You are now the proud owner of a KUBOTA FRONT MOWER. This machine is a product of KUBOTA's quality engineering and manufacturing. It is made of excellent materials and under a rigid quality control system. It will give you long, satisfactory service. To obtain the best use of your machine, please read this manual carefully. It will help you become familiar with the operation of the machine and contains many helpful hints about machine maintenance. It is KUBOTA's policy to utilize, as quickly as possible, every advance in our research. The immediate use of new techniques in the manufacturing of products may cause some small parts of this manual to become outdated. KUBOTA distributors and dealers will have the most up-to-date information. Please do not hesitate to consult them.

⚠ SAFETY FIRST

This symbol, the industry's "Safety Alert Symbol", is used throughout this manual and on labels on the machine itself to warn of the possibility of personal injury. Read these instructions carefully. It is essential that you read the instructions and safety regulations before you attempt to assemble or use this unit.

⚠ **DANGER :**	Indicates an imminently hazardous situation which, if not avoided, will result in death or serious injury.
⚠ **WARNING :**	Indicates a potentially hazardous situation which, if not avoided, could result in death or serious injury.
⚠ **CAUTION :**	Indicates a potentially hazardous situation which, if not avoided, could result in minor or moderate injury.
IMPORTANT :	Indicates that equipment or property damage could result if instructions are not followed.
NOTE :	Gives helpful information.

CONTENTS

⚠SAFE OPERATION 1

1. SERVICING 9
2. SPECIFICATIONS 10
3. INSTRUMENT PANEL AND CONTROLS 11
3.1 INSTRUMENT PANEL 11
3.2 CONTROLS 12
4. OPERATING INSTRUCTIONS 17
4.1 PRE-START CHECKS 17
4.2 OPERATING THE ENGINE 17
4.3 OPERATING THE MACHINE 18
4.4 CHECK DURING OPERATING 19
5. MAINTENANCE 20
5.1 DAILY CHECK 20
5.2 LUBRICANTS, FUEL AND COOLANT 21
5.3 MAINTENANCE CHECK LIST 22
6. CHECK AND MAINTENANCE 24
6.1 FUEL 24
6.2 ENGINE OIL 25
6.3 TRANSMISSION FLUID 26
6.4 PTO GEAR CASE FLUID 28
6.5 REAR AXLE DIFFERENTIAL CASE FLUID (4WD) 28
6.6 REAR AXLE GEAR CASE FLUID (4WD) 28
6.7 OILING AND GREASING POINTS 29
6.8 INTAKE AIR LINE 30
6.9 RADIATOR 31
6.10 AIR CLEANER 33
6.11 BATTERY 34
6.12 TIRE PRESSURE 35
6.13 FUSE 35
6.14 CHECKING ENGINE START SYSTEM 36
6.15 CHECKING OPC SYSTEM 36
6.16 REPLACING LIGHT BULB 37
7. ADJUSTMENTS 38
7.1 FAN DRIVE BELT TENSION 38
7.2 BRAKE 38
7.3 REAR AXLE (2WD) 39
8. TROUBLESHOOTING 40
8.1 BATTERY TROUBLESHOOTING 40
8.2 MACHINE TROUBLESHOOTING 40
8.3 ENGINE TROUBLESHOOTING 41
9. LONG-TERM STORAGE 42
10. WIRING DIAGRAM 43

SAFE OPERATION

Careful operation is your best insurance against an accident. Read this section carefully before operating the machine. All operators, whether experienced or not, should read this and other related manuals before operating the mower or any attachment on it. It is the owner's obligation to instruct all operators in safe operation.
This cutting machine is capable of amputating hands and feet and throwing objects. Failure to observe the following safety instructions could result in serious injury or death.

1. BEFORE OPERATING

(1) Know your equipment and its limitations. Read this entire manual before attempting to start and operate the machine.
(2) Know the controls and how to stop quickly.
(3) Pay special attention to the warning, caution and danger labels on the machine itself.
(4) KUBOTA recommends the use of a ROPS (Roll Over Protective Structure) and seat belt in almost all applications. This combination will reduce the risk of serious injury or death should the machine tip over.
This machine is intended to use on flat terrain.

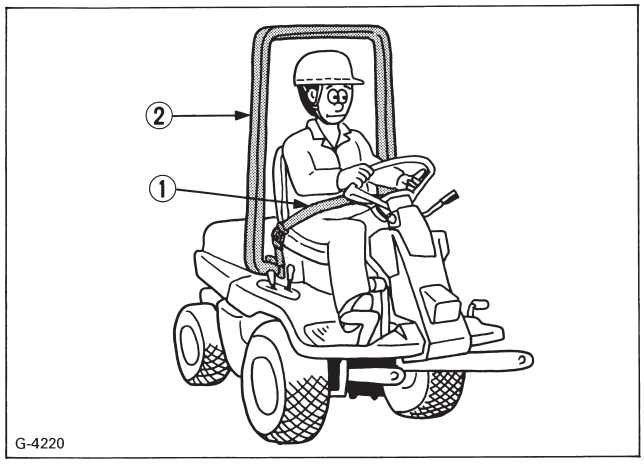

(1) Seat belt *(2) ROPS*

(5) Always use the seat belt if the machine has a ROPS. Never fasten the seat belt without a ROPS. Check the seat belt daily and replace if frayed or damaged.
(6) Never modify or repair a ROPS. Welding, bending, drilling or cutting any portion of the ROPS will weaken the ROPS structure. If any structural member is damaged, replace the entire structure at your local KUBOTA dealer.
(7) Do not operate the machine or any attachments while under the influence of alcohol, medication, controlled substances or when fatigued.
(8) Check brakes, clutch, and other mechanical parts for correct adjustment and wear. Replace worn or damaged parts promptly. Check the tightness of all nuts and bolts regularly. (For further details, see MAINTENANCE AND ADJUSTMENTS section.)
(9) Keep all shields and guards in place. Replace any that are damaged or missing.
(10) Carefully check the vicinity before operating the machine or any attachments to it. Clear the work area of objects (wires, rocks, etc.) that might be picked up and thrown. Do not allow any bystanders around or near machine during operation.
(11) Before allowing other people to use your machine, explain how to operate and have them read this manual before operation.
(12) Never wear loose, torn, or bulky clothing around machine. The clothing may catch on moving parts or controls. Wear and use any additional safety items such as hard hat, safety boots or shoes, eye and hearing protection, gloves, etc. As appropriate or required.
(13) Never allow passengers or non-qualified operators on the machine at any time. You must operate the machine from the seat only.
(14) Keep your machine clean. Accumulations of dirt, grease, and trash can contribute to fires and lead to personal injury.
(15) In addition to the design and configuration of equipment, hazard control and accident prevention are dependent upon the awareness, concern, and prudence of personnel involved in the operation, transport, maintenance, and storage of equipment or in the use and maintenance of facilities.
(16) Use only implements recommended by KUBOTA. Use proper ballast to front or rear of machine to reduce the risk of upsets. Follow the "SAFE OPERATION" procedures, specified in the manuals included with equipment.
(17) Follow the maintenance recommendations. See "Maintenance and Lubrication".
(18) It is recommended that your machine be thoroughly inspected at least once a year by an authorized KUBOTA Dealer.
(19) This machine is equipped with many safety devices. Do not attempt to remove or alter them.
(20) The exhaust gas from the muffler is very hot. To prevent fire, do not expose dry grass, mowed grass, oil or any other combustible materials to exhaust gas. Use a spark arrester where required. Also keep

the engine and muffler clean all the time. Replace the muffler if it has a fault.

(21) While mowing, always wear substantial foot wear and long trousers. Do not operate the equipment when barefoot or wearing open sandals.

(22) Do not wear radio or music headphones while operating the machine. Safe operation requires your full attention.

(23) Keep the machine and attachments in good operating condition and keep safety devices in place and in proper working condition.

(24) Do not modify the machine. Unauthorized modification may affect the function of the machine, which may result in personal injury.

(25) Keep all nuts, bolts, and screws tight to be sure the equipment is in safe working condition. Check the mower blade mounting bolts for proper tightness at frequent intervals. On multi-bladed mowers, take care as rotating 1 blade can cause other blades to rotate.

2. OPERATING

◆ Starting

(1) Always sit in the operator's seat when starting engine or operating levers or controls.

(2) Before starting the engine make sure that all levers and speed control pedal are in neutral, the parking brake is engaged, and Power Take Off is disengaged.

(3) Do not start engine by shorting across starter terminals. The machine may start in gear and move if normal starting circuitry is bypassed.

(4) Do not operate or idle engine in a non-ventilated area. Carbon monoxide gas is colorless, odorless, and deadly.

(5) Do not "ride" the brake pedal. Use brake for stopping only.

◆ Operating

(1) Keep all shields and guards in place. Replace any that are damaged or missing.

(2) Do not drive at high speed or turn the machine when the differential is locked.

(3) Do not operate near ditches, holes, embankments, or other terrain which may collapse under the machine weight. The risk of machine tip over increases when the ground is loose or wet.

(4) To avoid tip over, operate up and down slopes, not across. Avoid sudden starts and stops on slopes. Slow down, and use extra caution when changing directions on a slope.
Park the machine on a firm, level surface.

(5) Watch where you are going at all times. Watch for and avoid obstacles. Be alert at curbs, near trees, and other obstructions and hidden hazards.

(6) When working in cooperation with other operators, always let others know what you are doing ahead of time.

(7) Never try to mount or dismount a moving machine.

(8) Do not operate the machine with bare feet. Keep hands, feet, and clothing away from power-driven parts.

(9) Do not drive machine on streets or highways. Watch for traffic when you cross roads or operate near roads.

(10) Look to the rear before and when backing. You must disengage blades before shifting into reverse. Make sure the area immediately behind you is clear of obstructions or holes and small children. Use extra caution when machine is equipped with Grass Catcher.

(11) Do not cross gravel roads with the PTO engaged.

(12) Do not drive at high speed or turn the front mower when the differential is locked. (2WD)

(13) Do not depress 4WD release pedal on slopes. (4WD)

(14) Be aware of the mower discharge direction and do not point it at anyone.

(15) When using any attachments, never direct discharge material toward bystanders. Do not allow anyone near the attachments while in operation.
Do not mow when bystanders are present in the mowing area.

(16) To reduce fire hazards, keep the engine exhaust area free of grass or leaves.

(17) Be sure rotating blades and engine are stopped and the key is removed before placing hands or feet near blades.

(18) Shut the engine off and wait for all movement to stop before unclogging the chute of the grass catcher. [if equipped]

(19) Always inspect the mower and the grass catcher [if equipped] after striking any foreign object. This will insure that all mower and grass catcher parts are safe and secure and not damaged.
Repair or replace any damaged parts before re-starting.

(20) Operate during daylight or in bright artificial light.

(21) Do not operate the mower without either the grass container or the guard in place.
Be aware of the mower discharge direction and do not point it at anyone.

(22) Stop the blades rotating before crossing surface other than grass.

(23) If the machine starts to vibrate abnormally, disengage the drive to the attachments, stop the engine and remove the key. Then check the machine immediately.

(24) Do not operate the machine when there is a possibility of lightning. Even if the machine is equipped with a cabin, the operator is not protected from lightning.

◆ Operation on slopes

Slopes are a major factor related to loss-of-control and tip-over accidents, which can result in severe injury or death. All slopes require extra caution. If you cannot back up the slope or if you feel uneasy on it, do not mow it. The control of a ride-on machine sliding on a slope will not be regained by the application of the brake.

- Do not lift the grass container on a slope.

DO

(1) To avoid tip over, operate up and down slowly, not across. Stay off hills and slopes too steep for safe operation.
(2) Remove obstacles such as rocks, tree limbs, etc.
(3) Stay alert for holes in the terrain and other hidden hazards. Keep away from drop-offs. Uneven terrain could overturn the machine. Tall grass can hide obstacles.
(4) Follow KUBOTA's recommendations for wheel weights or counterweights to improve stability.
(5) The weight of grass in the grass container may increase the possibility of tip over. [if equipped]
(6) Keep all movement on slopes slow and gradual. Do not make sudden changes in speed or direction.
(7) Avoid starting or stopping on a slope. If tires lose traction, disengage the blades and proceed slowly straight down the slope.
(8) Reduce speed and exercise extreme caution on slopes and in sharp turns to prevent tip-over or loss of control.
(9) Use special caution when changing direction on slopes.
(10) Shift "High - Low Gear Shift Lever" to the Low position when mowing or operating on slopes.

DO NOT

(1) Do not turn on slopes unless necessary and then turn slowly and gradually downhill, if possible.
(2) Do not use the machine on slopes of more than 14°.
(3) Do not mow near drop-offs, ditches, or embankments. The machine could suddenly turn over if a wheel falls over the edge of a cliff or ditch, or if an edge caves in.
(4) Do not mow on wet grass. Reduced traction could cause sliding.
(5) Do not try to stabilize the machine by putting your foot on the ground.
(6) Do not use the grass catcher on steep slopes. [if equipped]
(7) Do not stop or start suddenly when going uphill or downhill.
(8) Never "freewheel". Do not let the machine travel downhill with speed control pedal at neutral position.
(9) Do not use the trailer and the towing implement.

◆ Children

Tragic accidents can occur if the operator is not alert to the presence of children. Children are attracted to the machine and the mowing activity. Never assume that children will remain where you last saw them.

(1) Keep children out of the mowing area and under the watchful care of another responsible adult.
(2) Be alert and turn the machine off if children enter the area.
(3) Before and when backing, look behind and down for small children.
(4) Never carry children. They may fall off and be seriously injured or interfere with safe machine operation.
(5) Never allow children to operate the machine, even under adult supervision. Local regulation can restrict the age of the operator.
(6) Use extra care when approaching blind corners, shrubs, trees, or other obstructions that might hide children from sight.

◆ Operators, age 60 years and above

Data indicates that operators, age 60 years and above, are involved in a large percentage of machine-related injuries. These operators should evaluate their ability to operate the machine safely enough to protect themselves and others from serious injury.

◆ Stopping

(1) Make sure that the machine has come to a complete stop before dismounting.
(2) Before dismounting, disengage the PTO, lower all attachments, place all control levers in their neutral positions, apply parking brake, turn off the engine, and remove the key switch.
(3) Make sure that the machine and all attachments have come to a complete stop before dismounting.

3. USING THE PTO

(1) Before installing or using PTO-driven equipment, read the manufacturer's manual and review the safety labels attached to the equipment.
(2) Wait until all moving components have completely stopped before connecting, disconnecting, adjusting, cleaning, or servicing any PTO-driven equipment.
(3) Use the PTO with KUBOTA approved attachments. The speed of the PTO is 2600 rpm.

4. USING THE LIFT LINK

(1) Use lift link only with authorized attachments designed for lift link usage.
(2) When using a lift link mounted attachment, be sure to install the adequate counter ballast weight specified in the attachment's manual.

5. TRANSPORTING

(1) Disengage power to attachment(s) when transporting or not in use.
(2) Do not tow this machine. Use a suitable truck or trailer when transporting on public roads.
(3) It is recommended that this machine not be used on public roads.
(4) Use extra care when loading or unloading the machine into a trailer or truck.

6. SERVICING AND STORAGE

◆ Servicing

(1) Before servicing, park the machine on a firm, level surface and apply the parking brake. Remove the key to prevent accidental start-up.
(2) Allow the machine time to cool before touching the engine, muffler, radiator, etc.
(3) Always stop the engine before refueling. Avoid spills and overfilling. Wipe up spilled fuel immediately.

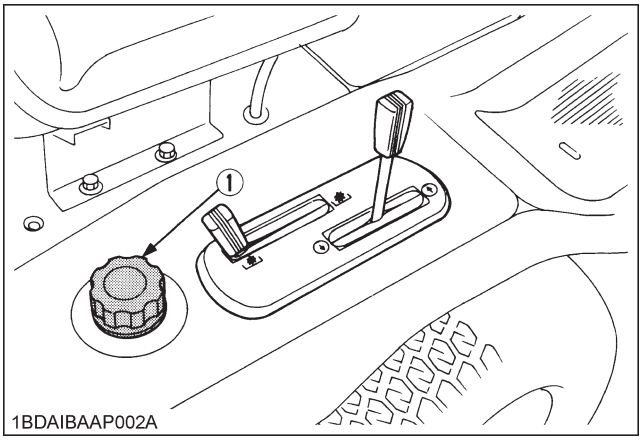

(1) Fuel tank cap

(4) Use extra care in handling diesel fuels. They are flammable.
  (1) Use only an approved container.
  (2) Do not remove fuel cap or refuel with the engine running. Allow engine to cool before refueling. Do not smoke while refueling or when standing near fuel.
  (3) Do not refuel the machine indoors and always clean up spilled fuel or oil.
  (4) Do not store the machine or fuel container inside where there is an open flame, such as in a water heater.
  (5) If the fuel tank has to be drained, this should be done outdoors.
  (6) Replace all fuel tanks and container caps securely.
(5) Do not change the engine governor setting or overspeed the engine. Operating the engine at excessive speed can increase the hazard of personal injury.
(6) Do not smoke when working around battery or when refueling. Keep all sparks and flames away from battery and fuel tank. A battery, especially when charging, will give off hydrogen and oxygen gases which can explode and cause serious personal injury.
(7) Before "JUMP STARTING" a dead battery, read and follow all of the instructions to help protect the alternator from damage due to extreme load changes. (See "JUMP STARTING" in "OPERATING THE ENGINE" section.)
  Batteries contain sulfuric acid and produce explosive gases. Follow the instructions below to prevent personal injury.
  - Wear eye and skin protection.
  - Keep sparks and flame away.
  - Always have adequate ventilation while charging or using the battery.
(8) Keep first aid kit and fire extinguisher handy at all times.
(9) Do not remove the radiator cap while coolant is hot.
  When cool, slowly rotate cap to the first stop and allow sufficient time for excess pressure to escape before removing the cap completely.
(10) Disconnect the battery's ground cable before working on or near electric components.
(11) Do not use or charge the refillable type battery if the fluid level is below the LOWER (lower limit level) mark.
  Otherwise, the battery component parts may prematurely deteriorate, which may shorten the battery's service life or cause an explosion. Check the fluid level regularly and add distilled water as required so that the fluid level is between the UPPER and LOWER levels.
(12) Do not attempt to mount a tire on a rim unless qualified to do so and all proper safety precautions are followed.

(13) Always maintain the correct tire inflation pressure. Do not inflate tires above the recommended pressure shown in the Operator's Manual.

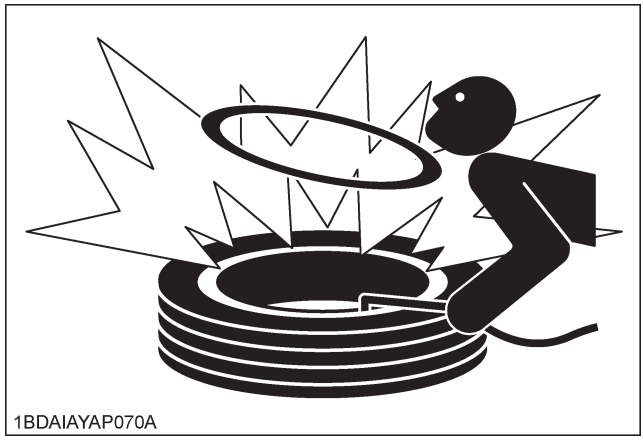
1BDAIAYAP070A

(14) Provide adequate support when changing wheels or the wheel tread width.

(15) Make sure that wheel nuts have been tightened to the specified torque.

(16) Escaping hydraulic fluid under pressure has sufficient force to penetrate the skin causing serious personal injury. Before disconnecting lines, be sure to relieve all pressure. Before applying pressure to the system, make sure all connections are tight and that lines, pipes, and hoses are not damaged.

1BAACAAAP010B

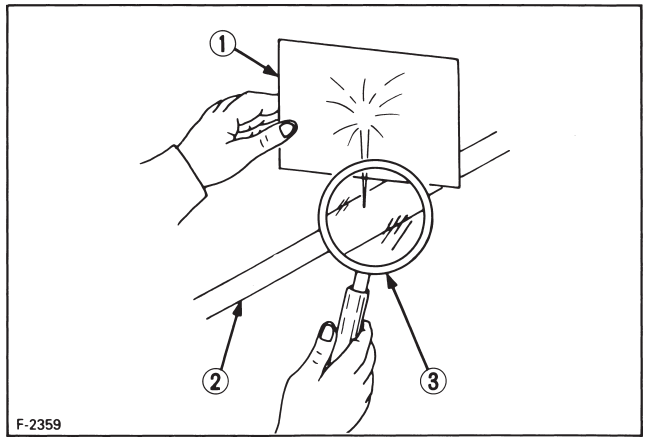

(1) Cardboard
(2) Hydraulic line
(3) Magnifying glass

Fluid escaping from pinholes may be invisible. Use a piece of cardboard or wood to search for suspected leaks: do not use hands. Use safety goggles or other eye protection. If injured by escaping fluid, see a medical doctor at once.
Serious infection or reaction may result if proper medical treatment is not administered immediately.
This fluid can produce gangrene or severe allergic reaction.

(17) Do not make adjustments or repairs with the engine running.

(18) Keep machine free of grass, leaves, or other debris build-up.

(19) Do not run a machine inside a closed area.

(20) Waste products such as used oil, fuel, hydraulic fluid, and batteries, can harm the environment, people, pets and wildlife. Please dispose properly. See your local Recycling Center or KUBOTA Dealer to learn how to recycle or get rid of waste products.

◆ Storage

(1) Keep the machine and supply of fuel in locked storage and remove the ignition key to prevent children or others from playing or tampering with them.

(2) To avoid sparks from an accidental short circuit, always disconnect the battery's ground cable ⊖ first and reconnect it last.

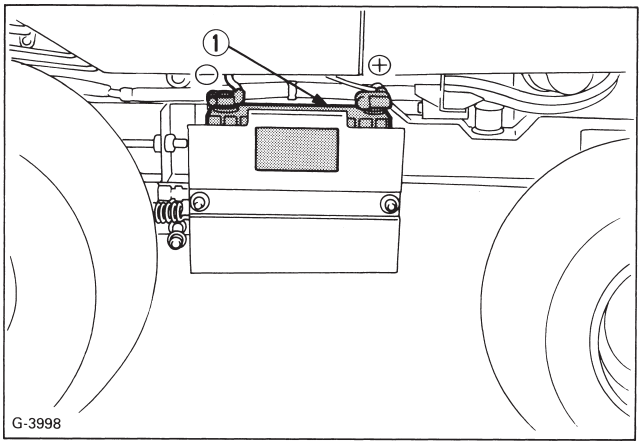

(1) Battery

(3) Do not store the machine with fuel in the tank inside a building where fumes may ignite. Allow the engine to cool before storing.

(4) To avoid the danger of exhaust fume poisoning, do not operate the engine in a closed building without adequate ventilation.

(5) To reduce fire hazards, clean the machine thoroughly before storage. Dry grass and leaves around the engine and mufflers may ignite.

7. JUMP STARTING INSTRUCTIONS AND PRECAUTIONS

- **If ice is present or the battery is cracked, DO NOT ATTEMPT TO "JUMP START" vehicle.**
- **Battery gases can explode. Keep cigarettes, sparks, and flames away from battery.**
- **Do not connect other end of negative (-) jumper cable to negative (-) terminal of machine battery.**

When jump starting the engine, follow the instructions below to safely start the engine.

(1) Bring helper vehicle with a battery of the same voltage as the disabled machine within easy cable reach.
"THE VEHICLES MUST NOT TOUCH".

(2) Apply the parking brakes of both vehicles and put the shift levers in neutral. Shut the engine off.

(3) Put on safety goggles and rubber gloves.

(4) Ensure the vent caps are securely in place. (if equipped)

(5) Attach the red clamp to the positive (red, (+) or pos.) terminal of the dead battery and clamp the other end of the same cable to the positive (red, (+) or pos.) terminal of the helper battery.

(6) Clamp the other cable to the negative (black, (-) or neg.) terminal of the helper battery.

(7) Clamp the other end to the engine block or frame of the disabled machine as far from the dead battery as possible.

(8) Start the helper vehicle and let its engine run for a few moments. Start the disabled machine.

(9) Disconnect the jumper cables in the exact reverse order of attachment. (Steps 7, 6 and 5).

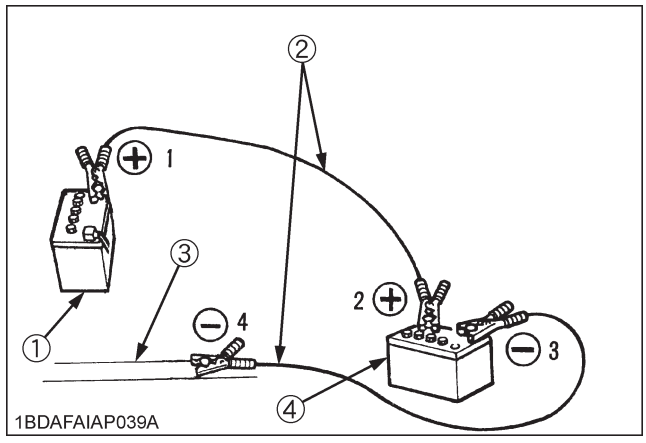

(1) Dead battery
(2) Jumper cables
(3) Engine block or frame
(4) Helper battery

Connect cables in numerical order.
Disconnect in reverse order after use.

8. SAFETY LABELS

(1) Part No. K3312-4713-1 (2WD)

1BDAIBAAP007A

1BDAIBAAP011A

(1) Part No. K3352-4713-1 (4WD)

1BDAIBAAP008A

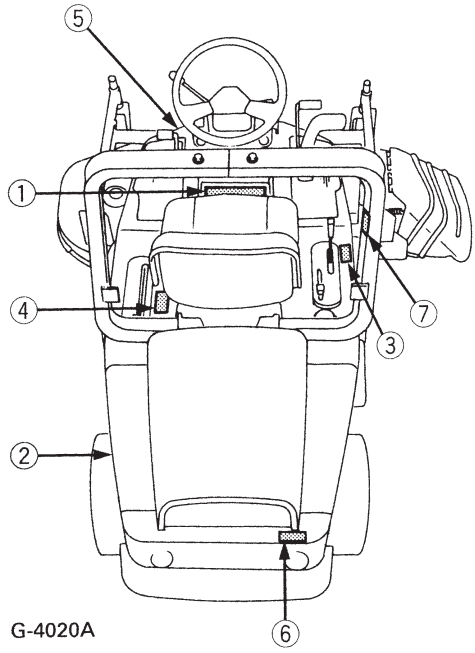

G-4020A

(3) Part No. K3311-4744-1

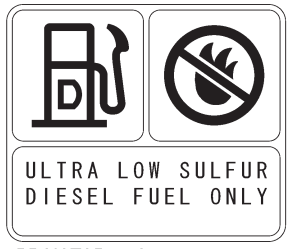

1BDAIATAP018A

(2) Part No. 3Y205-9835-1

1BDAIBAAP014A

(4) Part No. K3511-4732-1

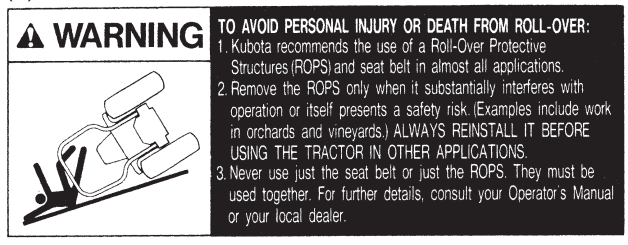

(7) Part No. 6C140-4746-1

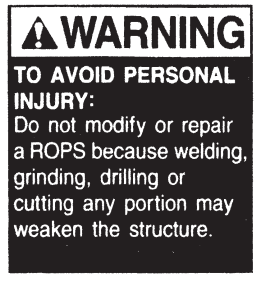

(5) Part No. K3312-4723-1 (2WD)

1BDAIBAAP009A

(6) Part No. K3312-4735-1

1BDAIBAAP010A

1BDAIBAAP012A

CARE OF SAFETY LABELS

(1) Keep safety labels clean and free from obstructing material.

(2) Clean safety labels with soap and water, dry with a soft cloth.

(3) Replace damaged or missing safety labels with new labels from your KUBOTA dealer.

(4) If a component with safety label(s) affixed is replaced with a new part, make sure new safety label(s) is (are) attached in the same location(s) as the replaced components.

(5) Mount new safety labels by applying on a clean, dry surface and pressing any bubbles to outside edge.

1. SERVICING

Your dealer is interested in your new machine and has the desire to help you get the most value from it. After reading this manual thoroughly, you will find that you can do some of the regular maintenance yourself.
However, when in need of parts or major service, however, be sure to see your KUBOTA dealer.
For service, contact the KUBOTA Dealership from which you purchased your machine or your local authorized KUBOTA dealer.
When in need of parts, be prepared to give your dealer both the machine and engine serial numbers.
The machine serial number is located on the frame on the left-hand side of the machine. The engine serial number is located on the engine crankcase, right side. Locate the serial numbers now and record them in the space provided.

KUBOTA GF1800-R-2, GF1800E-R-2
Machine Serial Number _____
Engine Serial Number _____
ROPS Serial Number _____
Date of Purchase _____

(To be filled in by purchaser)

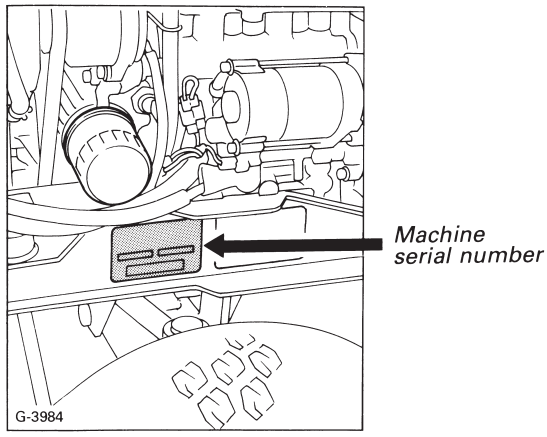

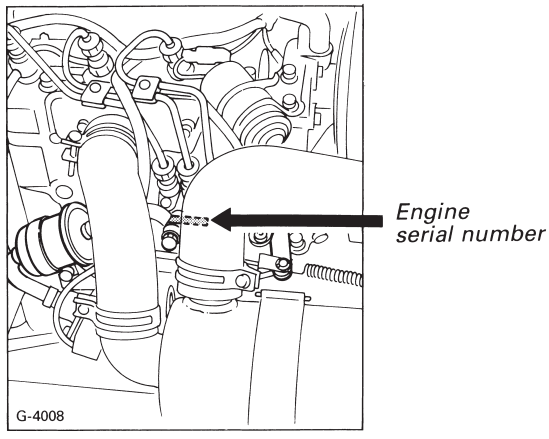

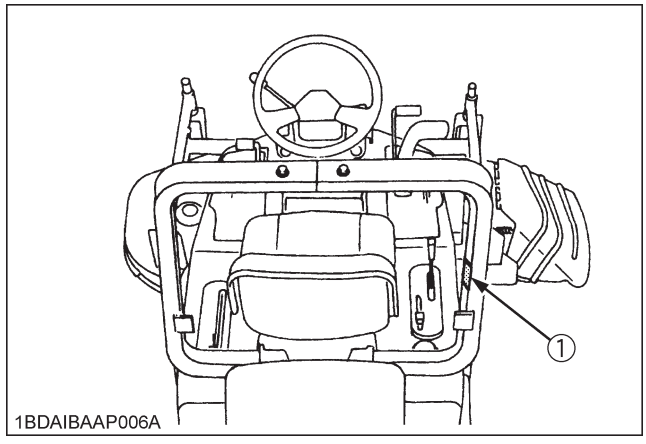

(1) ROPS serial number

2. SPECIFICATIONS

Model				GF1800E-R-2	GF1800-R-2
Engine	Model			**D722**	
	Type			Liquid-cooled diesel	
	Total displacement		cm³(cu.in.)	719 (43.88)	
	Gross power		kW(HP)	13.4 (18)	
	Rated revolution		rpm	3200	
	Low idling revolution		rpm	1250 to 1350	
	No.of cylinders			3	
	Starter			Electric starter with battery	
	Battery			12V 45AH	
	Fuel			Diesel fuel No.1 [below -10°C (14°F)] Diesel fuel No.2 [above -10°C (14°F)]	
	Fuel tank capacity		L(US.gals)	20 (5.3)	
	Engine oil capacity		L(US.qts.)	3.0 (3.2)	
	Radiator coolant capacity		L(US.qts.)	3.0 (3.2)	
	Preheating system			Super glow	
	Engine stop			Key stop	
Dimensions	Overall length		mm(in.)	2120 (83.46)	2017 (79.4)
	Overall width		mm(in.)	970 (38.2)	
	Overall height		mm(in.)	2030 (79.92)	
	Wheel base		mm(in.)	850 (33.5)	
	Tread	Front	mm(in.)	724 (28.5)	
		Rear	mm(in.)	775 (30.5)	795 (31.3)
	Min, ground clearance		mm(in.)	102 (4)	
	Weight (Fuel empty)		kg(lbs)	478 (1054)	492 (1085)
Traveling system	Type			Front 2 wheel drive	4 wheel drive
	Tire size	Front		20×10.00-8	
		Rear		16×6.50-8	
	Steering type			Manual	
	Brake			Internal expanding shoe	
	Travel speed control			Foot pedal with speed set lever	
	Transmission			Hydrostatic	
	Traveling speeds	Forward	km/h(mph)	0 to 13.5 (0 to 8.4)	
		Reverse	km/h(mph)	0 to 6.5 (0 to 4.1)	
	Transmission oil capacity		L(US.qts.)	5.7 (6.1)	
	Rear axle diff.case		L(US.qts.)	–	1.5 (1.6)
	Rear axle gear case		L(US.qts.)	–	0.4 (0.4)
Seat	Suspension type			Coil spring	
Mower drive system				Shaft drive	
Mower clutch type				Wet multi plates	
Mower PTO brake				Wet single plate	
Mower lift system				Hydraulic	
Applicable mid-mower cutting width			in.	48" 54" 60"	
Cutting height adjustment			mm(in.)	25 to 102 (1 to 4)	
Mower mounting method				Quick joint, Quick mount	
Step deck				Semi-flat	
Water temperature gauge				Standard	
Hour meter				Standard	

(Specifications and design subject to change without notice.)

3. INSTRUMENT PANEL AND CONTROLS

3.1 INSTRUMENT PANEL

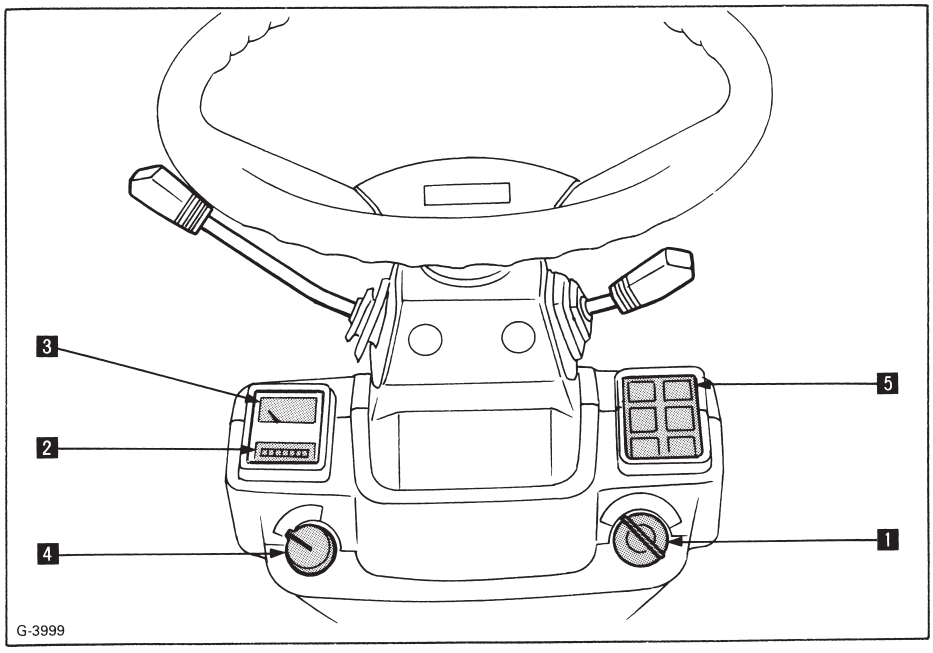

1 *Key switch*
2 *Hour meter*
3 *Coolant temperature meter*
4 *Head light switch*
5 *Easy checker*

1 Key Switch

- OFF ..... The position where the key can be inserted into or removed from the key switch. [When the key is turned this position, the engine stops the moment.]
- ON ..... The engine keeps running.
- Preheat ... The super glow plug is heated.
- Start ..... Depress the brake pedal fully and turn the key switch to this position to start the engine.

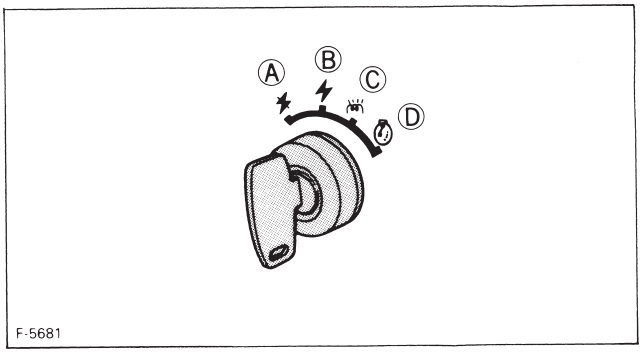

(A) "OFF" (B) "ON" (C) "PREHEAT" (D) "START"

IMPORTANT:

- Because of the safety device, the engine may not be started except when the PTO clutch is disengaged and the brake pedal fully depressed.

2 Hour Meter

This meter gives readings for the hours the front mower has been operated.
As the hour meter works electrically, it starts to work when the key switch is turned to ON.

3 Coolant Temperature Meter

(1) With the key switch at "ON", this meter indicates the temperature of the coolant. "C" for "cold" and "H" for "hot".
(2) If the indicator reaches the "H" setting (red zone), coolant is overheated. Check the machine by referring to "Radiator" (See page 31).

4 Head Light Switch

Turning the light switch clockwise illuminates the head-lights.

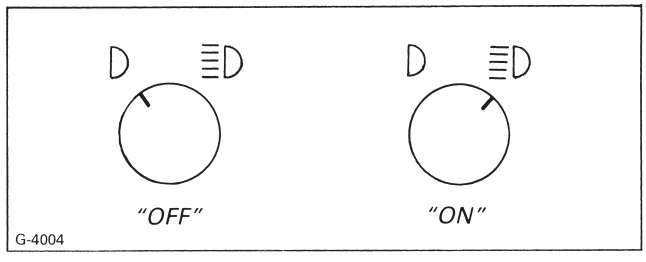

D ..... Head lights OFF
ED ..... Head lights ON

5 Easy Checker

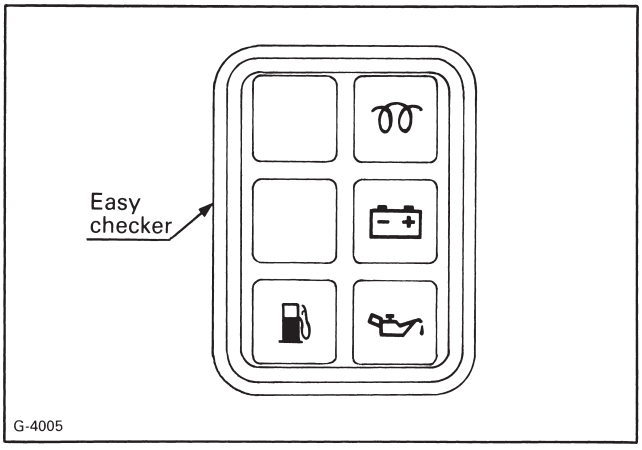

Alarm when the electrical charge system is not functioning properly.

Glow plug Indicator (Pre-heating Indicator)
When the key switch is in the "Preheat" position, the glow plug indicator illuminates. If the engine is preheated completely, the glow plug indicator turns off automatically.

Alarm when the engine oil pressure is low.

Alarm when the fuel tank is almost empty.

◆ **How to check the Easy Checker**

(1) When the key switch is turned "ON", all the lights except the glow plug indicator and fuel level indicator illuminates. When the engine starts up, all the lights should go off.

(2) If trouble should occur at any location while the engine is running, the warning light corresponding to that problem comes on.

IMPORTANT:

- Daily checks with the Easy Checker only, are not sufficient. Always conduct daily checks carefully by referring to "Daily Checks". (See page 20)

3.2 CONTROLS

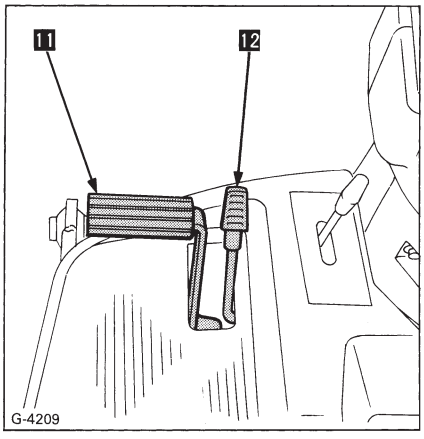

(4WD)

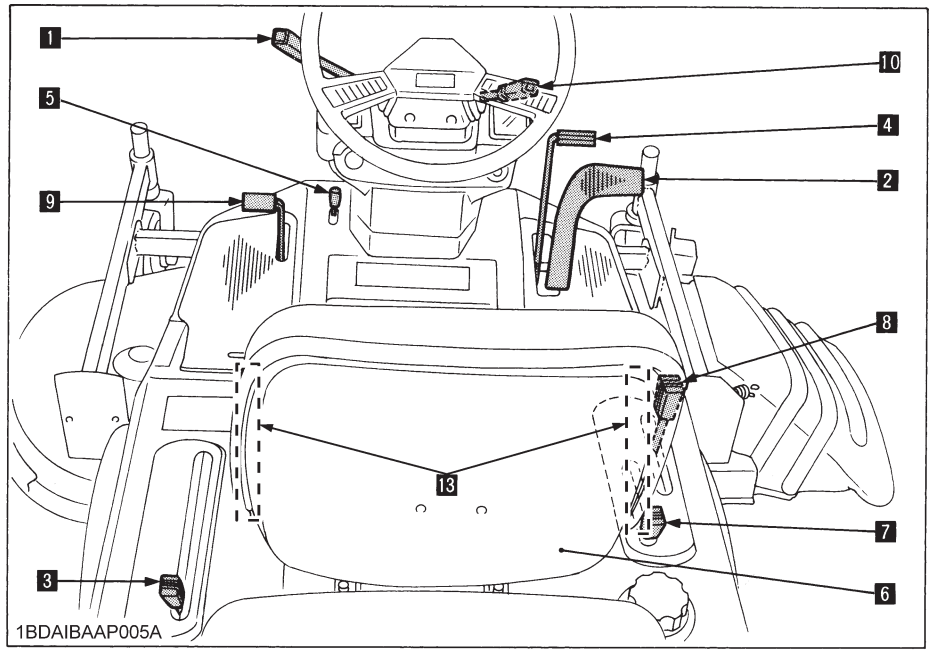

(2WD)

1 *Throttle lever*
2 *Speed control pedal*
3 *Speed set lever*
4 *Brake pedal*
5 *Parking brake knob*
6 *Seat*
7 *PTO lever*
8 *Hydraulic lift lever*
9 *Differential lock pedal (2WD)*
10 *Steering wheel tilt lever*
11 *4WD lock pedal*
12 *4WD release pedal*
13 *Seat belt*

1 Throttle Lever

Moving the throttle lever backward decreases the engine speed and moving it forward increases the engine speed.

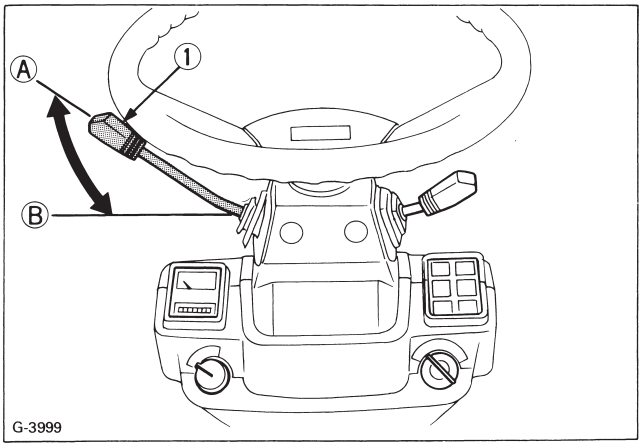

(1) Throttle lever *(A) "INCREASE"*
(B) "DECREASE"

2 Speed Control Pedal

Depress the speed control pedal with your right foot to move forward or backward.

NOTE:

- When the parking brake is applied, the speed control pedal is locked in the neutral position.

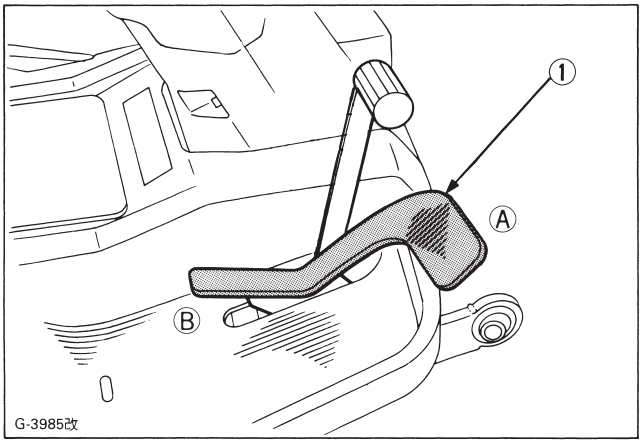

(1) Speed control pedal *(A) "FORWARD"*
(B) "REVERSE"

3 Speed Set Lever

WARNING

To avoid serious injury or death:

- **Shift the speed set lever completely to the rear before starting the engine.**

The speed set lever is designed for machine operating efficiency and operator comfort. This lever will provide a constant forward operating speed by mechanically holding the speed control pedal at the selected position.

Speed set lever cannot be set at MAX speed range.

- To engage speed set lever
1. Accelerate speed to desired level using speed control pedal, and move lever forward.
2. Release speed control pedal and desired speed will be maintained.
- To disengage speed set lever, move lever to "RELEASE" position or can be disengaged by depressing the brake pedal when urgent stop.

NOTE:

- If the lever is not in just "RELEASE" position, it is hard to depress the speed control pedal to "REVERSE".
- Speed set lever is concerned with the brake pedal stroke adjustment. (See page 38)

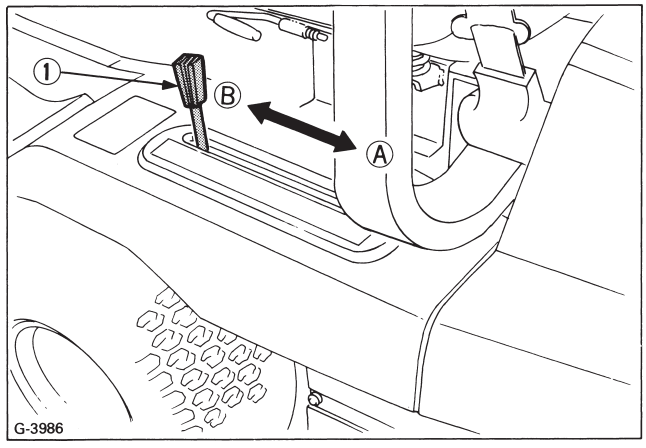

(1) Speed set lever *(A) "RELEASE" (Low)*
(B) "SET" (High)

4 Brake Pedal

WARNING

To avoid serious injury or death:

- **Do not depress the brake pedal quickly on slopes. Quick brake will cause upset of the machine.**

(1) Depress the brake pedal to stop the machine.

5 Parking Brake Knob

(1) To apply the parking brake:
- Depress the brake pedal and hold in position.
- Latch the brake pedal with the parking brake knob.

(2) To release the parking brake: Depress the brake pedal again.

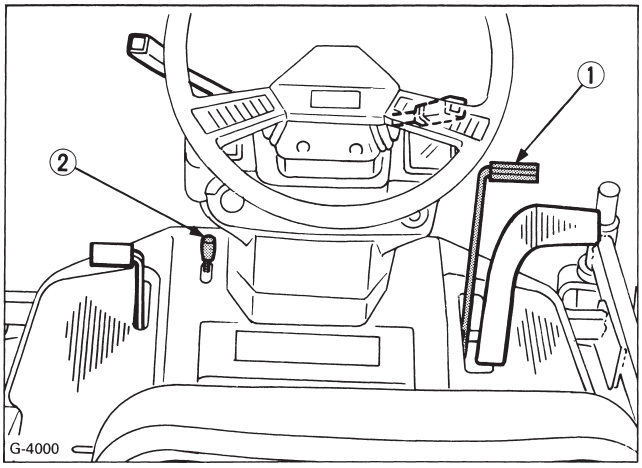

(1) Brake pedal
(2) Parking brake knob

6 Seat

The operator's seat position can be adjusted forward and backward in 60 mm (2.4 in.) range by pulling the seat sliding lever.

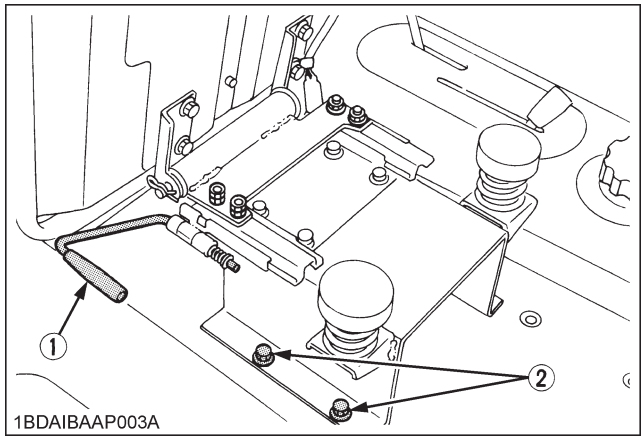

(1) Seat sliding lever
(2) Seat attaching bolt

7 PTO Lever

To drive the PTO, move the PTO lever to the forward position.

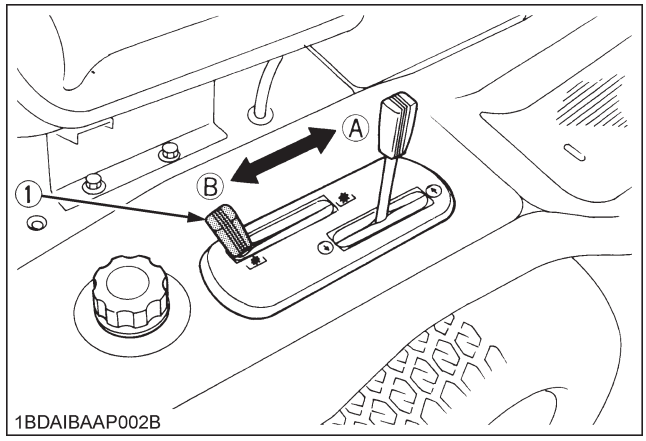

(1) PTO lever *(A) "ENGAGE"*
(B) "DISENGAGE"

(1) If you get off the seat while the PTO is running, the engine will stop automatically. (Seat safety control)
(2) Before starting the engine, pull the PTO lever to the disengage position. If it is at the engaged position, the engine will not crank.

NOTE: These are built-in safety features.

8 Hydraulic Lift Lever

The hydraulic lift lever is used to raise and lower implement used with the machine (ex. Mower).
To lower implement, push the lever forward.
To raise it, pull the lever back.

IMPORTANT:
- Do not operate until the engine is warmed up. If operation is attempted while the engine is still cold, the hydraulic mechanism will not properly function and its service life will be shortened.

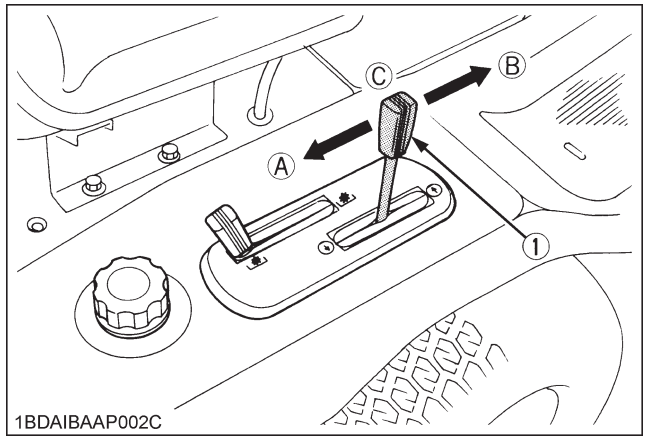

(1) Hydraulic lift lever *(A) "UP"*
(B) "DOWN"
(C) "NEUTRAL"

NOTE:
- When equipped with the grass catcher, the mower becomes somewhat heavy. While the engine is idling with the grass catcher on, there may be a delay in lifting. In such a case, increase the engine rpm slightly to make the lifting smooth.

9 Differential Lock Pedal (2WD)

WARNING

To avoid serious injury or death:

- **Do not drive at high speed or turn the machine when the differential is locked. Release the lock before making such a turn.**

If one of the front wheels should slip, step on the differential lock pedal.
Both wheels will then turn together, reducing slippage.
The differential lock is applied only when the pedal is depressed.

IMPORTANT:

- If the differential lock will not release when the pedal is released, alternately step speed control pedal back and forward slightly.
- Do not apply the differential lock when traveling at high speed, or damage to the transmission may result.

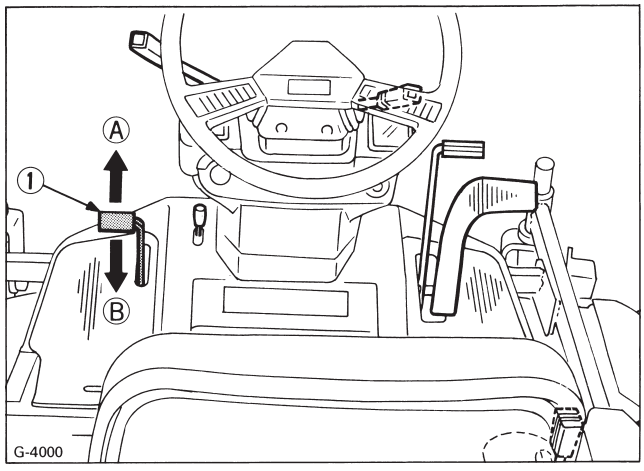

(1) Differential lock pedal *(A) "ENGAGE"*
(B) "DISENGAGE"

10 Steering Wheel Tilt Lever

By pulling upward the steering wheel tilt lever, the lock is released and the steering wheel can be adjusted to four tilt angle settings.

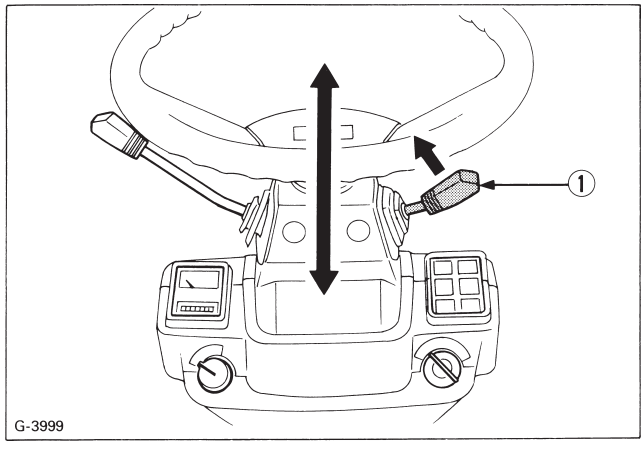

(1) Steering wheel tilt lever

11 4WD Lock Pedal (A)
12 4WD Release Pedal (B)

WARNING

To avoid serious injury or death:

- **Do not depress pedal B on slopes. Use the 4WD pedals when a greater traction is required.**

- Depress pedals A and B on demand for a greater traction.
- Depress pedal A when in need of full time 4WD.
- To release 4WD, depress pedal B.

IMPORTANT:

- Do not steer the rear wheel sharply when engaging 4WD, or damage to the turf may result.

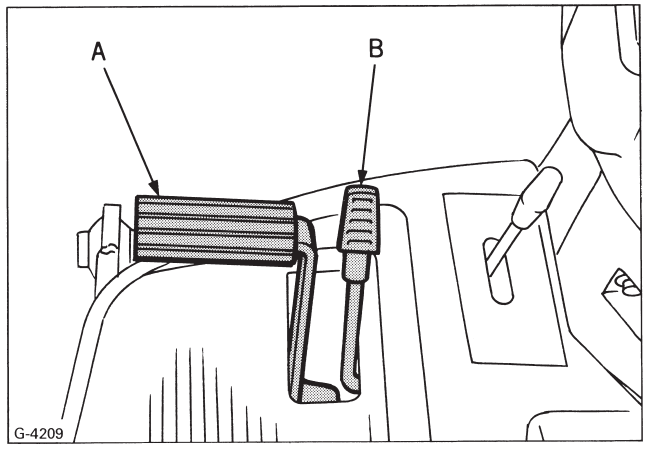

■ Engine Stop Lever

The engine stops when the key switch is turned off.
If the engine does not stop, open the hood and pull engine stop lever (Red mark) and hold it until the engine stops.
Then contact your KUBOTA dealer immediately.

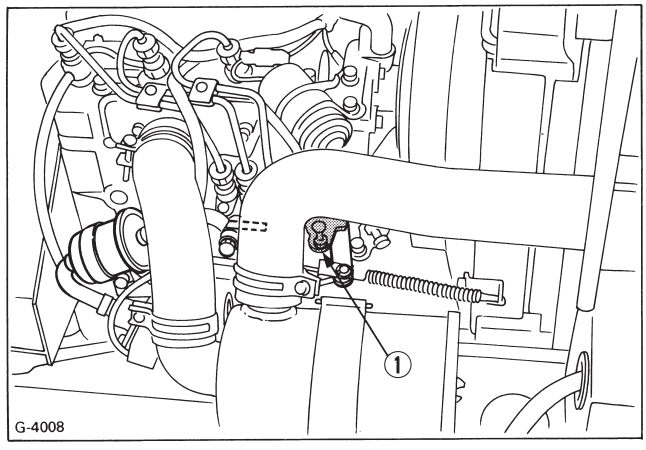

(1) Engine stop lever

13 Seat Belt

WARNING

To avoid serious injury or death:

- **Always use the seat belt when the ROPS is installed.**
- **Do not use the seat belt if a foldable ROPS is down or there is no ROPS.**

Adjust the seat belt for proper fit and connect to the buckle. The seat belt is an auto-locking retractable type.

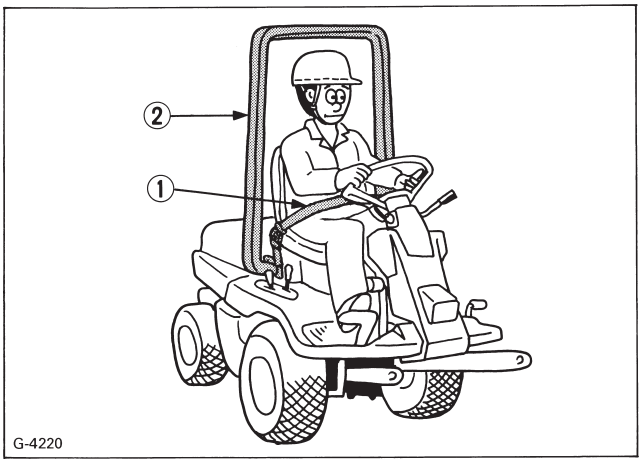

(1) Seat belt *(2) ROPS*

4. OPERATING INSTRUCTIONS

4.1 PRE-START CHECKS

Before starting the engine, make pre-start checks according to the Maintenance Schedule on page 20.

4.2 OPERATING THE ENGINE

WARNING

To avoid serious injury or death:

- **Read "SAFE OPERATION" in the front of this manual.**
- **Read the Safety labels located on the machine.**
- **To avoid danger of exhaust fume poisoning, do not operate the engine in a closed building without proper ventilation.**
- **Always set the speed control pedal and PTO lever to the "neutral" position before starting the engine.**

■ Starting

(1) Sit on the operator's seat.
(2) Fasten the seat belt.
(3) Place the PTO lever in the "disengage" position.
(4) Place the speed control pedal in the "neutral" position.
(5) Place hydraulic control lever in "neutral" position.
(6) Set the throttle lever 1/2 of the way forward.
(7) Insert the key into the key switch and turn clockwise one notch.
(8) Make sure that the easy checker lights are on.
(9) Turn the key switch clockwise, and hold it for about 5 seconds. (at the preheat position)
The glow plug indicator turns off for about 5 seconds.
For the appropriate preheating time, refer to the table below:

Temperature	Preheating Time
Over 0°C (32°F)	5 sec.
Below 0°C (32°F)	10 sec.

(10) Depress the brake pedal fully.
(11) Turn the key switch to the start position and the starter will turn and the engine should start.
(12) Make sure that the easy checker lights have gone off. If the light is still on, immediately stop the engine and check the remedy following the instruction of page 19.
(13) Warm the engine by running at medium speed.

IMPORTANT:

- Do not turn the key switch while the engine is running.
- When the temperature is below 0°C (32°F), run the engine at medium speed to warm up the lubricant of the engine and transmission for at least 10 minutes. If the machine is operated before the lubricant is warm enough, the machine life will be shortened.
- Do not operate the machine under full load until it is sufficiently warmed.
- Do not use starting fluid.

IMPORTANT:

- When the ambient temperature is less than -15°C (5°F), remove the battery from the machine and store it somewhere warm until next operation.

■ Stopping

(1) Slow the engine down by moving the throttle lever backward.
(2) Turn the key switch off and remove the key from the switch.

■ How to Open the Hood

WARNING

To avoid serious injury or death from contact with moving parts:

- **Never open the hood while the engine is running.**
- **Do not touch muffler or exhaust pipes while they are hot; severe burns could result.**

To open the hood, lift the lever of the front end of the hood.

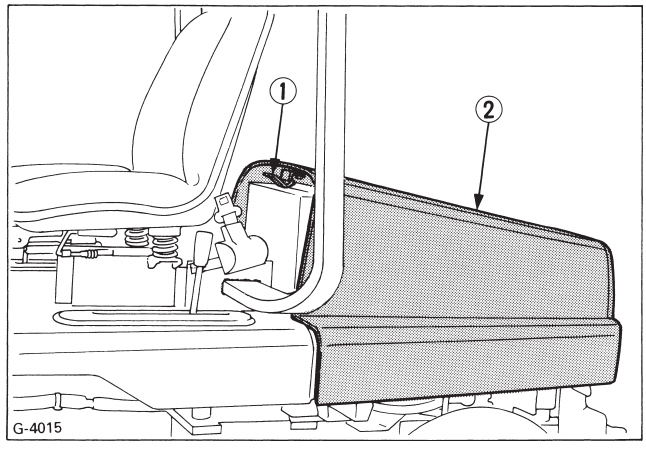

(1) Hook
(2) Hood

4.3 OPERATING THE MACHINE

WARNING

To avoid serious injury or death:

- **Do not allow any person other than the driver to ride on the machine.**
- **Do not drive the machine close to the edges of ditches or banks which may collapse under the weight of the machine, especially when the ground is loose or wet.**
- **When turning the machine, be sure to reduce the travel speed by letting up on the pedal.**
- **Do not drive at high speed or turn the machine when the differential is locked.**
- **To avoid tip over, operate up and down slopes, not across. Avoid sudden starts and stops on slopes. Slow down, and use extra caution when changing directions on a slope. Park the machine on a firm, level surface.**
- **Watch where you are going at all times. Watch for and avoid obstacles. Be alert at curbs, near trees, and other obstructions and hidden hazards.**
- **Do not drive machine on streets or highways. Watch for traffic when you cross roads or operate near roads.**
- **Look to the rear before and when backing. You must disengage blades before shifting into reverse. Make sure the area immediately behind you is clear of obstructions or holes and small children. Use extra caution when machine is equipped with Grass Catcher.**
- **Do not drive at high speed or turn the front mower when the differential is locked. (2WD)**
- **Do not depress 4WD release pedal on slopes. (4WD)**

■ Starting

(1) Unlock the parking brake.
(2) Speed up the engine by moving the throttle lever forward.
(3) Depress the speed control pedal with your right foot to move forward or backward.

IMPORTANT:

- Never move the machine with the brake on.

■ Stopping

(1) Release the speed control pedal and depress the brake pedal to stop the machine.
(2) Slow the engine down.
(3) Shift PTO lever to "disengage" position.
(4) Lower all attachments, place all control levers in their neutral positions.
(5) Apply parking brake, turn off the engine and remove the key switch.

■ Parking

TO APPLY THE PARKING BRAKE:

- Depress the brake pedal and hold in position.
- Latch the brake pedal with the parking brake knob.

TO RELEASE THE PARKING BRAKE:

Depress the brake pedal again.

WARNING

To avoid serious injury or death:
Before leaving the operator's position,

- **Set parking brake.**
- **Lower all implements to the ground.**
- **Shut off engine.**
- **Remove the key from the switch.**

If necessary to park on an incline, be sure to chock the wheels to prevent accidental rolling of the machine.

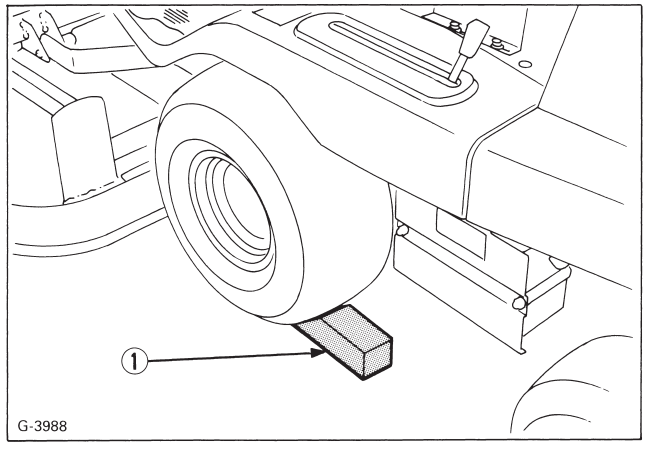

(1) Chocks

■ Transporting

(1) Do not tow this machine a long distance, or damage to the transmission may result.
(2) Transport the machine on a trailer.
  - Fasten the machine to the trailer.
  - Prevent the hood from opening by wind by any chance. If necessary, load the machine backward or use stable strap.

4.4 CHECK DURING OPERATING

When operating, check the following to ensure that all the parts are functioning correctly.

■ Coolant

WARNING

To avoid serious injury or death:

- **Do not remove radiator filler cap until coolant temperature is well below its boiling point. Then rotate cap slightly to the stop to relieve any excess pressure before removing cap completely.**

If engine coolant temperature meter indicator moves into the red zone on the gauge, stop the engine and check for the following:

(1) Shortage or leakage of the coolant.
(2) Foreign matter on the radiator net and dust and dirt between the radiator fins and tube.
(3) Loose fan drive belt.
(4) Internal blockage in the radiator core or hose.

■ Easy Checker

- **Engine oil pressure light**

The pressure light signals the operator that the engine oil pressure is below the prescribed level. If the light goes on during operation, immediately stop the engine and check the following:

(1) The level of the engine oil. (See page 25)
(2) The conditions of the lubrication system.

- **Battery charge light**

The charge light signals to the operator that the dynamo is not charging the battery.
If the light goes on during operation, immediately stop the engine and check for:

(1) Wiring failure.
(2) Connection failure of dynamo and regulator.
(3) Dynamo drive belt failure.

■ Fuel

Do not allow the fuel tank to empty completely.
Doing so will allow air to enter into the fuel system. Should this happen, the fuel system must be bled. (See page 24)

■ Exhaust Fumes

(1) Exhaust Fumes are colorless at normal output drive.
(2) If the color of exhaust gas becomes dark often during driving, the engine maybe overloaded. This will result in excessive wear to the engine, drivertrain, and tires. Operate in a lower speed or decrease load placed on machine.

■ Urgent Stop

Should the following take place, immediately stop the engine.

(1) The engine suddenly slows down or speeds up.
(2) Unusual noises are suddenly heard.
(3) Exhaust suddenly become very dark.
(4) The engine oil pressure light illuminates while operating.
(5) The battery charge light goes on while operating.

For checks and remedies in the above situations, consult your KUBOTA dealer.

5. MAINTENANCE

5.1 DAILY CHECK

To prevent trouble from occurring, it is important to know the conditions of the machine well. Check before starting.

WARNING

To avoid serious injury or death:

- **Be sure to check and service the machine on a level surface with the engine shut off and the parking brake on.**

	No.	Check item	Reference page
Walking around the machine	1	The tire pressure, wear and damage	35
	2	Oil and water leak	—
	3	Engine oil level	25
	4	Transmission fluid level	26
	5	Battery electrolyte level	34
	6	Coolant level in the recovery tank	31
	7	Damage of machine body, tightness of all bolts and nuts	—
	8	Radiator screen	33
	9	Panel screen	33
	10	Brake play	38
	11	Oiling	29
While sitting in the operator's seat	1	Speed control pedal Brake pedal	—
	2	Speed set lever	13
	3	Parking brake	—
	4	Steering wheel	—
	5	Seat belt and ROPS	16
Turning the key switch on	1	Performance of the easy checker light	12
	2	Headlights	—
	3	Fuel level	24
Starting the engine	1	Color of the exhaust fumes	19
	2	Safety start switch and seat safety control. If either of these do not operate properly, contact your KUBOTA dealer immediately.	36
	3	Check for abnormal noise and vibration.	—
Others	1	Check the areas where previous trouble was experienced.	—

1. Always check condition of the seat belt and ROPS attaching hardware before operating the machine.
2. Replace anything that is frayed or damaged.

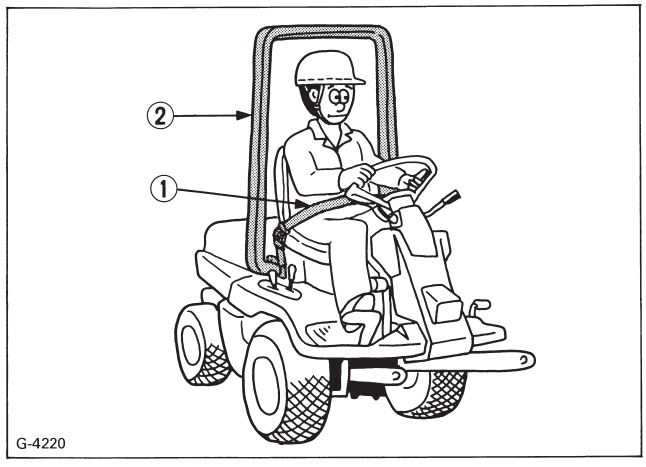

(1) Seat belt *(2) ROPS*

5.2 LUBRICANTS, FUEL AND COOLANT

To prevent serious damage to lubricating systems, use genuine KUBOTA fluid or equivalent.

Place	Capacity	Lubricants
Fuel	20 L (5.3 U.S.gals)	No.2-D diesel fuel No.1-D diesel fuel if temperature is below -10°C
Coolant	3.0 L (3.2 U.S.qts.)	Fresh clean water with anti-freeze
Engine crankcase	3.0 L (3.2 U.S.qts.)*1	Engine oil: Refer to the NOTE below.
		Above 25°C .....SAE30, SAE10W-30 or 15W-40 0 to 25°C .....SAE20, SAE10W-30 or 15W-40 Below 0°C .....SAE10W, SAE10W-30 or 15W-40
Transmission	5.7 L (6.1 U.S.qts.)	KUBOTA SUPER UDT-2 fluid*2
PTO Gear Case	0.6 L (0.63 U.S.qts.)	
Rear axle differential case (4WD)	1.5 L (1.6 U.S.qts.)	KUBOTA SUPER UDT-2 fluid*2 or SAE85W, SAE90 gear oil (API service classification: more than GL-3)
Rear axle gear case (R&L) (4WD)	0.4 L (0.4 U.S.qts.)	
Center pin (2WD) King pins (2WD) Joint shaft Link pivot Seat adjuster Speed control pedal shaft PTO drive shaft Rear wheel drive shaft (4WD) Knuckle arm (4WD)	Moderate Amount	Multipurpose EP2 grease (NLGI Grade No.2)
Cable (Throttle) Cable (4WD pedal)	Moderate Amount	Oil

Note *1 Oil amount when the oil level is at the center of the oil level gauge
*2 The product name of KUBOTA genuine UDT fluid may be different from that in the Operator's Manual depending on countries or territories. Consult your local KUBOTA Dealer for further detail.

IMPORTANT

- To prevent serious damage to hydraulic systems, use only KUBOTA genuine fluid or its equivalent.

NOTE

◆ **Engine Oil:**
- Oil used in the engine should have an American Petroleum Institute (API) service classification and Proper SAE Engine Oil according to the ambient temperatures as shown above:
- With the emission control now in effect, the CF-4 and CG-4 lubricating oils have been developed for use of a low-sulfur fuel on on-road vehicle engines. When an off-road vehicle engine runs on a high-sulfur fuel, it is advisable to employ the "CF or better" lubricating oil with a high Total Base Number (TBN of 10 minimum).
- Refer to the following table for the suitable API classification engine oil according to the engine type (with internal EGR, external EGR or non-EGR) and the fuel (low-sulfur or high-sulfur fuel).

Fuel used	Engine oil classification (API classification)	
	Oil class of engines except external EGR	Oil class of engines with external EGR
High Sulfur Fuel [≧0.05% (500 ppm)]	**CF** (If the "CF-4, CG-4, CH-4 or CI-4" lubricating oil is used with a high-sulfur fuel, change the lubricating oil at shorter intervals. (approximately half))	---
Low Sulfur Fuel [<0.05% (500 ppm)] or Ultra Low Sulfur Fuel [<0.0015% (15 ppm)]	**CF, CF-4, CG-4, CH-4** or **CI-4**	**CF** or **CI-4** (Class CF-4, CG-4 and CH-4 engine oils cannot be used on EGR type engines)

EGR: Exhaust Gas Re-circulation

- The CJ-4 engine oil is intended for DPF (Diesel Particulate Filter) type engines, and cannot be used on this machine.

	except external EGR	with external EGR
Models	GF1800-R-2, GF1800E-R-2	---

◆ **Fuel:**

- Cetane number of 45 minimum. Cetane number greater than 50 is preferred, especially for temperatures below -20°C (-4°F) or elevations above 1500 m (5000 ft).
- If diesel fuel with sulfur content greater than 0.5% (5000 ppm) sulfur content is used, reduce the service interval for engine oil and filter by 50%.
- NEVER use diesel fuel with sulfur content greater than 0.05% (500 ppm) for EXTERNAL EGR type engine.
- DO NOT use diesel fuel with sulfur content greater than 1.0% (10000 ppm).
- Diesel fuels specified to EN 590 or ASTM D975 are recommended.
- No.2-D is a distillate fuel of lower volatility for engines in industrial and heavy mobile service. (SAE J313 JUN87)

◆ **Transmission Oil:**

The oil used to lubricate the transmission is also used as hydraulic fluid. To insure proper operation of the hydraulic system and to complete lubrication of the transmission, it is important that a multi-grade transmission fluid is used in this system. We recommend the use of **KUBOTA UDT or SUPER UDT fluid** for optimum protection and performance.
(Consult your local KUBOTA Dealer for further detail.)
Do not mix different brands together.

- Indicated capacities of water and oil are manufacturer's estimate.

5.3 MAINTENANCE CHECK LIST

No.	Items \ Period		Every 50 Hr (2 weekly)	Hours used							Reference page
				50 Hr	100 Hr	200 Hr	300 Hr	400 Hr	500 Hr	After since	
1	Engine start system	check	○							every 50 Hr	36
2	OPC system	check	○							every 50 Hr	36
3	All grease fittings	grease	○								29
4	PTO drive shaft	grease				○		○		every 200 Hr	29
5	Air cleaner element	cleaning			○	○	○	○	○	every 100 Hr *2	33
		replacement								every 1000 Hr or 1 year *5	33
6	Battery condition	check			○	○	○	○	○	every 100 Hr *7	34
7	Fuel filter element	check			○	○	○	○	○	every 100 Hr	25
		replacement							○	every 500 Hr *3	25
8	Radiator core	cleaning			○	○	○	○	○	every 100 Hr	31
9	Fan drive belt tension	check	○							*3	38
10	Engine oil	change		◎		○		○		every 200 Hr *1	25
11	Engine oil filter cartridge	replacement		◎		○		○		every 200 Hr *1	26
12	Transmission fluid	change						○		every 400 Hr	26
13	Transmission oil filter cartridge	replacement		◎				○		every 400 Hr *1	27
14	Transmission strainer	cleaning						○		every 400 Hr	27
15	PTO gear case fluid	change						○		every 400 Hr	28
16	Rear axle differential case fluid (4WD)	change						○		every 400 Hr	28

No.	Items / Period		Every 50 Hr (2 weekly)	Hours used							Reference page
				50 Hr	100 Hr	200 Hr	300 Hr	400 Hr	500 Hr	After since	
17	Rear axle gear case (right and left) fluid (4WD)	change						○		every 400 Hr	28
18	Fuel injection nozzle injection pressure	check								every 1500 Hr *3	25
19	Radiator	cleaning								every 2000 Hr or 2 years *6	31
20	Anti-freeze and coolant	change								every 2000 Hr or 2 years *6	32
21	Injection pump	check								every 3000 Hr *3	25
22	Fuel line	check								every 1 year *4	24
		replacement								every 4 years *3	24
23	Intake air line	check								every 1 year *4	30
		replace								every 4 years	31
24	Engine breather hose	check								every 1 year *4	—
		replace								every 4 years *3	—
25	Radiator hose and clamp	check								every 1 year *4	32
		replace								every 4 years *3	32
26	Hydraulic hose	check								every 1 year *4	—
		replacement								every 4 years *3	—
27	Fuel system	bleeding								Service as required	24
28	Fuse	replace									35
29	Light bulb	replace									37

IMPORTANT

- The jobs indicated by ◎ must be done initially.

*1 The initial 50 hours should not be a replacement cycle.

*2 Air cleaner should be cleaned more often in dusty conditions than in normal conditions.

*3 Consult your local KUBOTA Dealer for this service.

*4 Replace if any deterioration (crack, hardening, scar, or deformation) or damage occurred.

*5 Every 1000 hours or every 1 year whichever comes faster.

*6 Every 2000 hours or every 2 years whichever comes faster.

*7 When the battery is used for less than 100 hours per year, check the battery condition by reading the indicator annually.

6. CHECK AND MAINTENANCE

6.1 FUEL

■ Checking and Refueling

WARNING

To avoid serious injury or death:

- **Handle fuel carefully. If the engine is running, do not fill the fuel tank. If engine is hot, let engine cool several minutes before adding fuel. Do not smoke while filling the fuel tank or servicing the fuel system. Fill fuel tank only to bottom of filler neck.**

IMPORTANT:

- Be careful not to spill fuel on your machine. Fuel may damage plastic. Wipe up spilled fuel immediately.

Check the fuel level. Take care that the fuel tank does not become empty.

Fuel tank capacity	20 L (5.3 U.S.gals.)

(1) Use No.2 diesel fuel.
(2) Use No.1 diesel fuel if the temperature is below -10°C (14°F).
(3) Always use a strainer in refueling to prevent fuel injection pump contamination.
(4) Once the fuel tank becomes empty, air admitted to the fuel system. In such a case, it will be necessary to bleed the fuel system before the engine will start.

IMPORTANT:

- If the engine runs out of fuel and stalls, the engine components may be damaged.
- Be careful not to spill during refueling. If a spill should occur, wipe it off at once, or it may cause a fire.
- To prevent condensation (water) accumulation in the fuel tank, fill the tank before parking overnight.

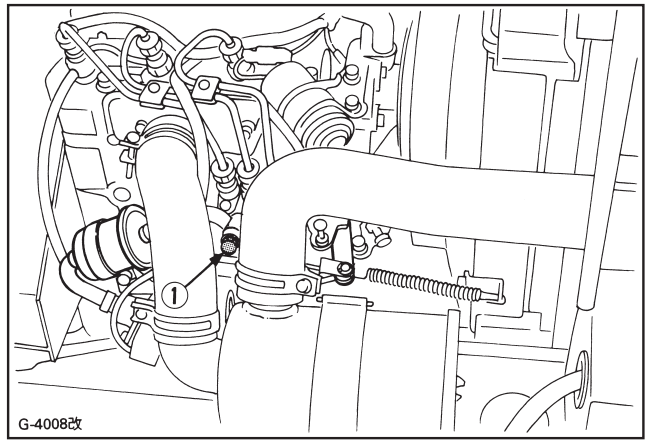

(1) Bleeding screw

■ Bleeding the Fuel Lines

Air must be removed:

(1) When the fuel filter and lines are removed.
(2) When fuel tank is completely empty.
(3) After the machine has not been used for a long period of time.

Bleeding procedure is as follows:

WARNING

To avoid serious injury or death:

- **Do not bleed the fuel system when the engine is hot.**

(1) Fill the fuel tank with fuel.
(2) Turn the key switch to the ON position.
(3) Open the bleed screw.
When bubbles disappear from fuel coming out of the plug, tighten the bleed screw.

■ Checking Fuel Line

WARNING

To avoid serious injury or death:

- **Stop the engine when attempting to check and change prescribed below.**
- **Never fail to check the fuel line periodically. The fuel line is subject to wear and aging, fuel may leak out onto the running engine, causing a fire.**

(1) If the clamp is loose, apply a slight coat of lubricant onto the threads and retighten it securely.
(2) The fuel line is made of rubber and ages regardless of service period.
(3) After inspection, if the fuel line and clamps are found damaged or deteriorated, replace them.

(4) After the fuel line and clamp have been replaced, bleed the fuel system.

IMPORTANT:

- When the fuel line is disconnected for maintenance or repair, close both ends of the fuel line with a piece of clean cloth or paper to prevent dust and dirt from entering. Entrance of dust and dirt causes malfunction of the fuel injection pump. In addition, particular care must be taken not to admit dust and dirt into the fuel pump.

■ Fuel filter

Change fuel filter every 500 hours.

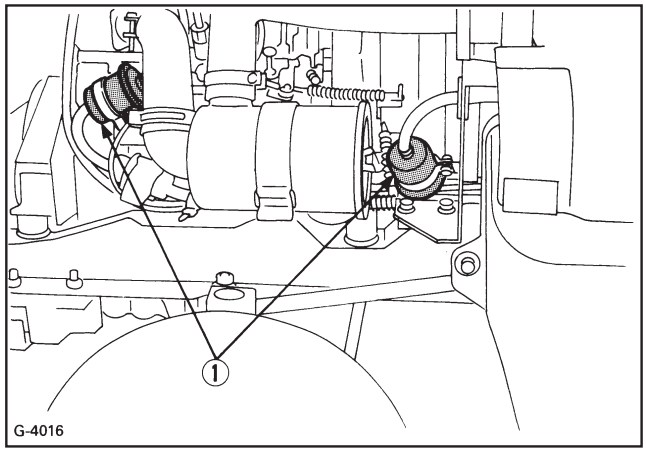

(1) Fuel filter

■ Checking Fuel Injection Nozzle Injection Pressure

Consult your local KUBOTA Dealer for this service.

■ Checking Injection Pump

Consult your local KUBOTA Dealer for this service.

6.2 ENGINE OIL

■ Oil level check and Replenishment

WARNING

To avoid serious injury or death:

- **Before checking the oil, be sure to stop the engine.**

(1) Check engine oil before starting the engine for at least 5 minutes after the engine has stopped.
(2) To check the oil level, remove the dipstick, wipe it clean, replace it, and draw it out again. Check to see that the oil level is between the two notches.
(3) If the level is too low, add new oil to the recommended level at the oil port.

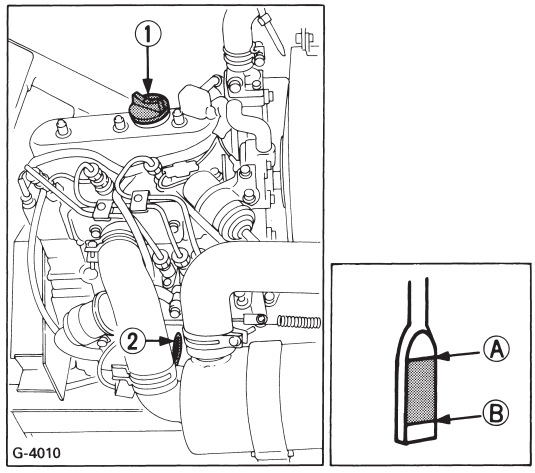

(1) Engine oil port *(A) "UPPER LEVEL"*
(2) Oil dipstick *(B) "LOWER LEVEL"*

(4) When using a different brand or viscosity oil from the previous one, remove all of the old oil. Never mix two different types of oil.
(5) Use the proper Engine Oil SAE according to the ambient temperatures. (See page 21)

■ Engine Oil Change

WARNING

To avoid serious injury or death:

- **Before changing the oil, be sure to stop the engine.**

(1) To change the used oil, remove the drain plug at the bottom of the engine and drain the oil completely. All the used oil can be drained out easily when the engine is still warm.
(2) Fill with the new oil up to the upper notch on the dipstick.

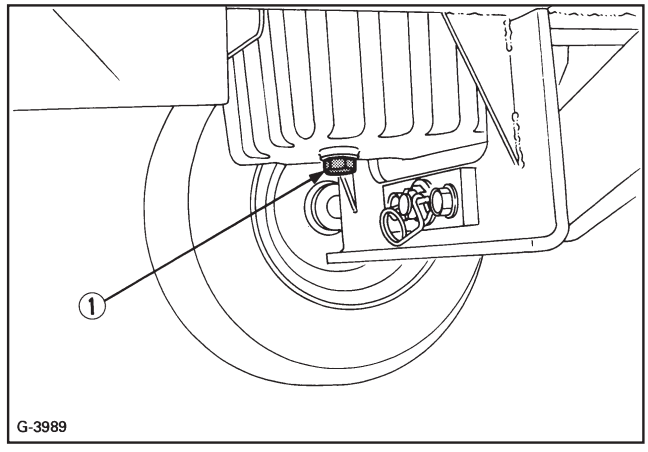

(1) Drain plug

■ Engine Oil Filter Cartridge Change

WARNING

To avoid serious injury or death:

- **Be sure to stop the engine before changing the oil filter cartridge.**

(1) The oil filter cartridge must be changed every 200 service hours (Oil Filter Cartridge 15841-3243-1).
(2) Apply a slight coat of oil onto the rubber gasket of new cartridge.
(3) To install the new cartridge, screw it in by hand. Over tightening may cause deformation of the rubber gasket.
(4) After the new cartridge has been replaced, the engine oil level normally lowers a little. Add engine oil to proper level. Check for oil leaks around filter gasket.

IMPORTANT:

- To prevent serious damage to the engine, replacement element must be highly efficient. Use only a genuine KUBOTA filter or its equivalent.

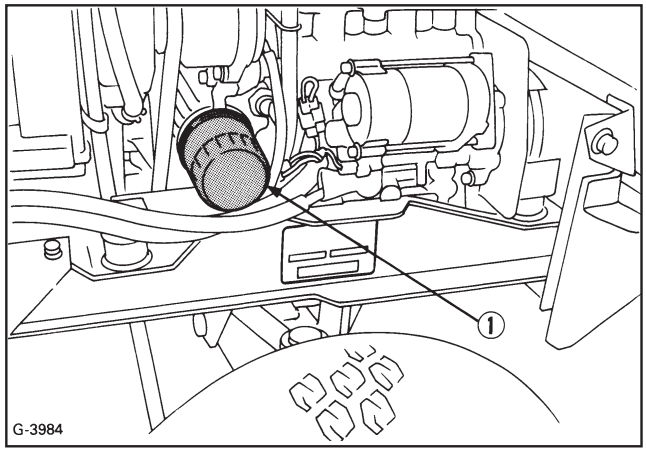

(1) Engine oil filter cartridge

6.3 TRANSMISSION FLUID

WARNING

To avoid serious injury or death:

- **Be sure to stop the engine before checking and changing the transmission fluid.**

■ Transmission Fluid Check and Replenishment

Draw out the dipstick, wipe it clean, replace it, and draw it out again. Check to see that the fluid level is on the upper notch. If low, replenish through the fluid port. Use UDT hydrostatic transmission fluid or its equivalent. (See page 21)

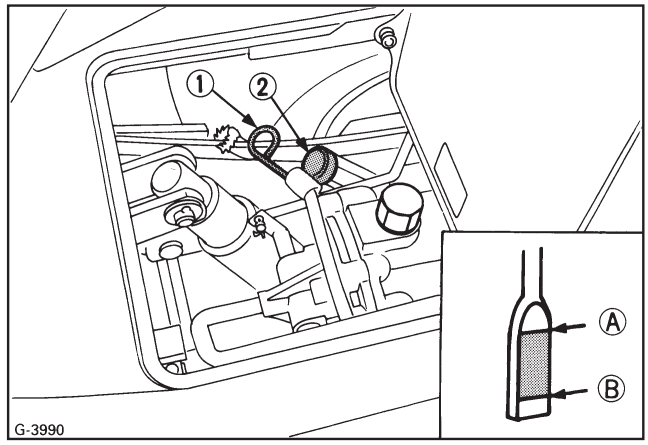

(1) Dipstick *(A) "UPPER LEVEL"*
(2) Transmission fluid port *(B) "LOWER LEVEL"*

The fluid in the transmission case is also used for the hydrostatic drive system.

(1) To drain the transmission case, place oil pan underneath the transmission case and remove the drain plug at the bottom of the transmission case.
(2) After draining, disassemble and clean the strainers and change the oil filter cartridge. After reassembling, fill with UDT hydrostatic transmission fluid.
(3) After running the engine for a few minutes, stop it and check the oil level again; add oil to the prescribed level.

IMPORTANT:

- Operate only at low RPM's immediately after changing the transmission fluid and filter cartridge. Keep the engine at medium speed for a few minutes to insure proper lubrication of all parts so there is no damage to transmission.

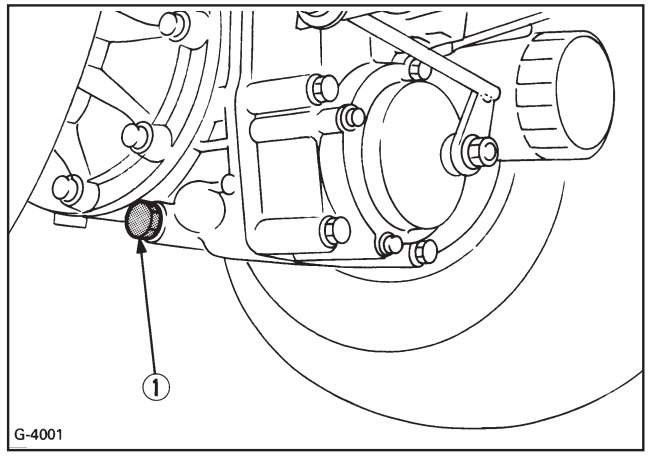

(1) Drain plug

■ Transmission Oil Filter Cartridge Change

WARNING

To avoid serious injury or death:

- **Be sure to stop the engine before changing the oil filters.**

(1) The oil filter cartridge must be changed every 400 service hours.

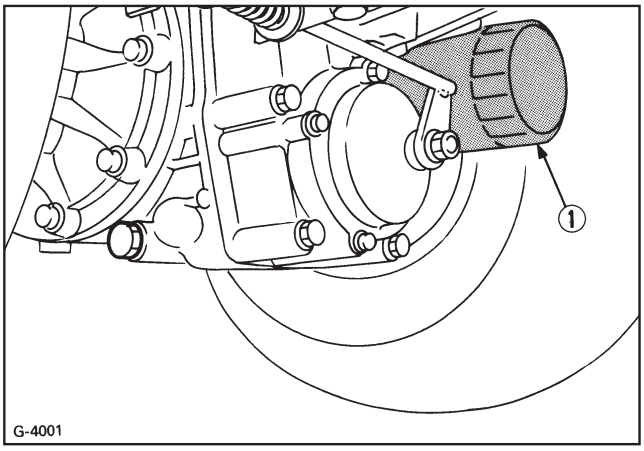

(1) Oil filter cartridge

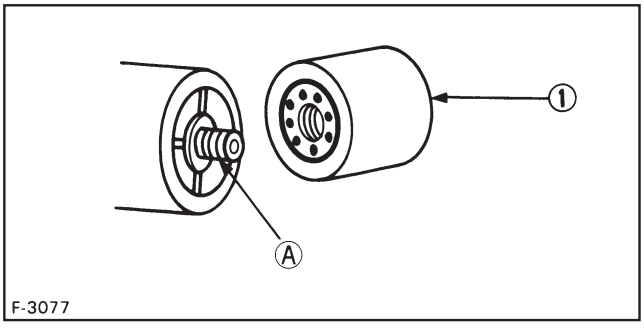

(1) Oil filter cartridge (66021-3606-1)

(2) Remove the oil filter cartridge by using the filter wrench.
(3) Lightly tighten the screw (A) by using a screwdriver.
(4) Apply a slight coat of oil onto the cartridge gasket.
(5) To install the new cartridge, screw it in by hand. Over tightening may cause deformation of rubber gasket.
(6) After the new cartridge has been replaced, the transmission fluid level normally lowers a little. Add fluid to proper level. Check for oil leaks around filter gasket.

IMPORTANT:

- To prevent serious damage to a hydraulic system, replacement filter must be a highly efficient, 10 μm filter. Use only a genuine KUBOTA filter or its equivalent.

■ Cleaning Hydraulic Oil Strainers

When changing the transmission fluid, disassemble and clean completely the oil strainers with kerosene. Use care when reassembling to avoid damage to the strainer parts.

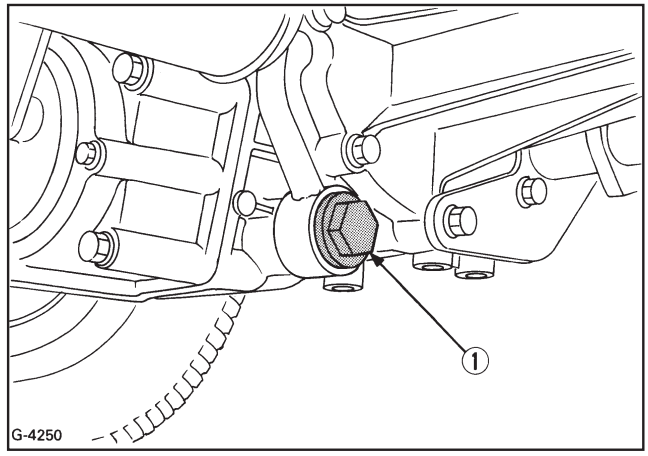

(1) Strainer

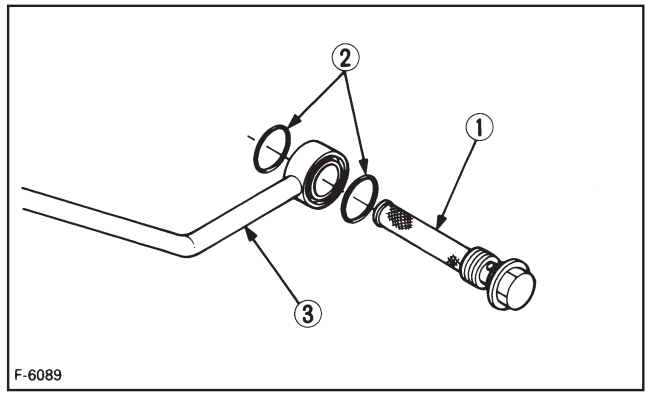

(1) Strainer
(2) O ring
(3) Suction pipe

6.4 PTO GEAR CASE FLUID

WARNING

To avoid serious injury or death:

- **Be sure to stop the engine before changing the PTO gear case fluid.**

■ PTO Gear Case Fluid Change

When changing the transmission fluid, change the PTO gear case fluid at the same time. Use UDT hydrostatic transmission fluid or its equivalent. (See page 21).

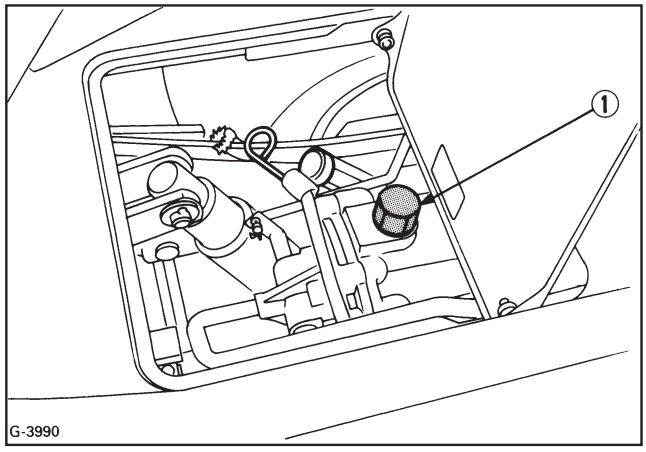

(1) PTO gear case fluid port

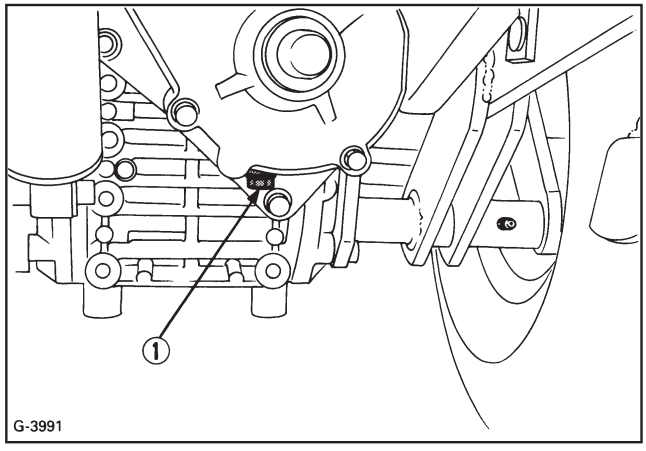

(1) PTO gear case drain plug

6.5 REAR AXLE DIFFERENTIAL CASE FLUID (4WD) (See page 21)

Remove the drain and filling port plug. After draining, replace the drain plug and fill with new oil.

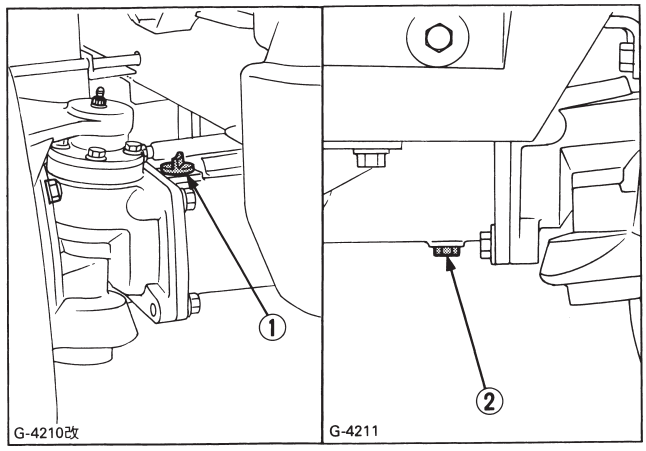

(1) Filling port plug
(2) Drain plug

6.6 REAR AXLE GEAR CASE FLUID (4WD) (RIGHT AND LEFT) (See page 21)

Remove the drain and filling port plugs with hex head wrench to drain the used oil. After draining, replace the drain plug and fill with new oil.

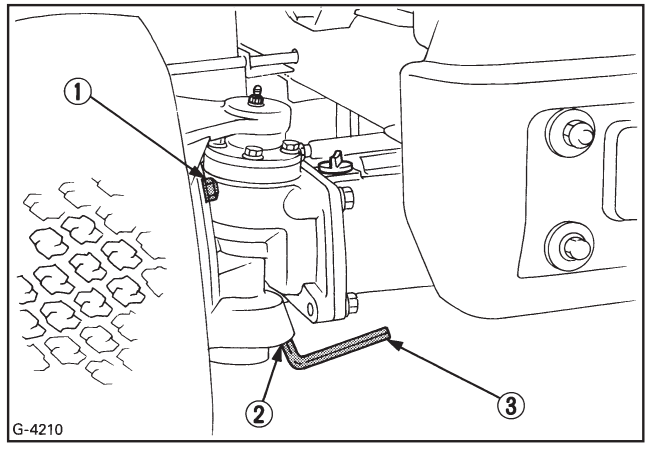

(1) Filling port plug
(2) Drain plug
(3) Hex head wrench

6.7 OILING AND GREASING POINTS

Oil the following points before starting.
Grease the following points refering to MAINTENANCE CHECK LIST. (See page 22)

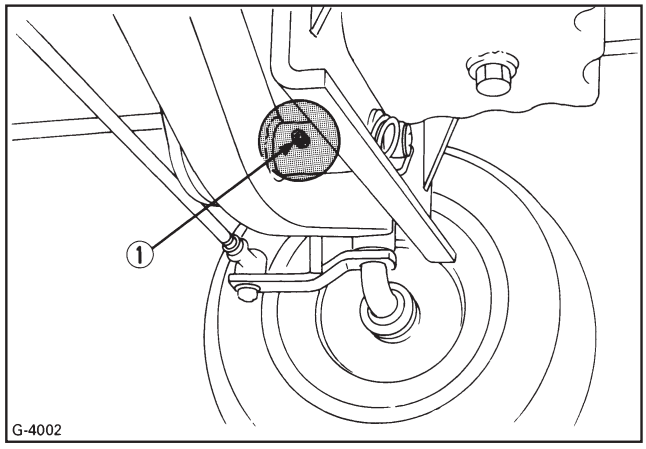

(1) Center pin (2WD) (Grease)

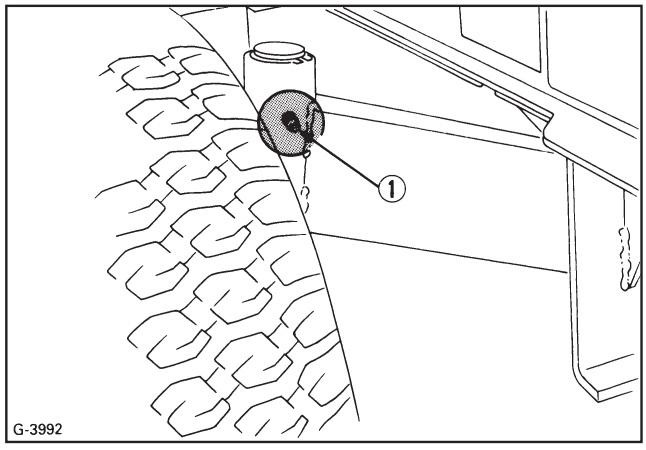

(1) King pins (2WD) (Grease)

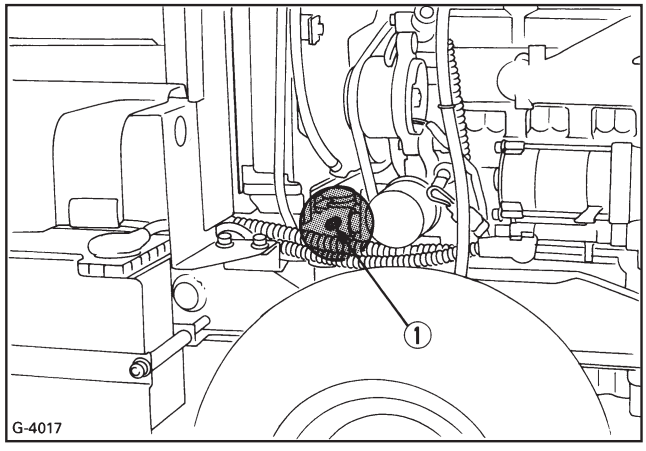

(1) Joint shaft (Grease)

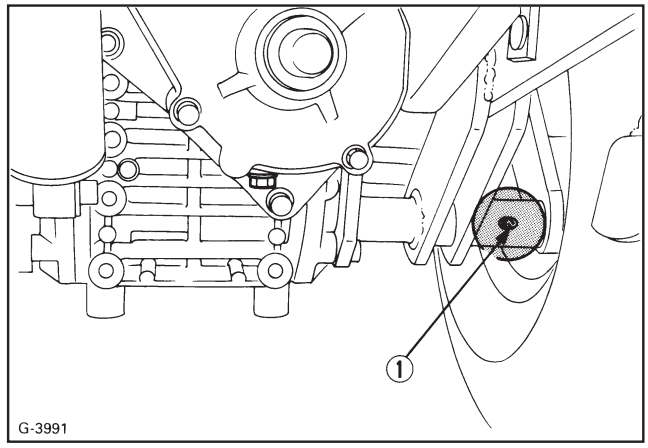

(1) Link pivots (Grease)

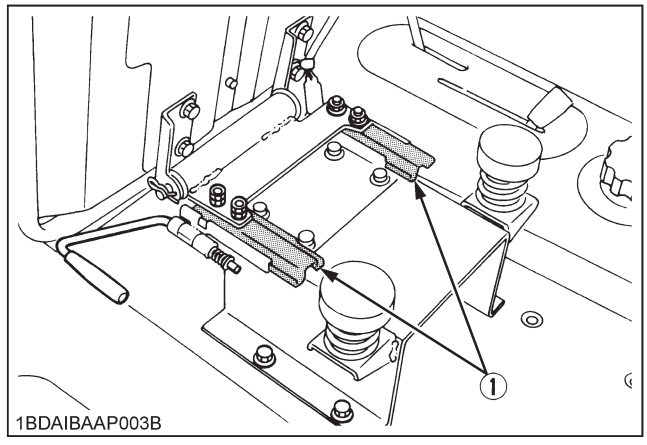

(1) Seat adjuster (Grease)

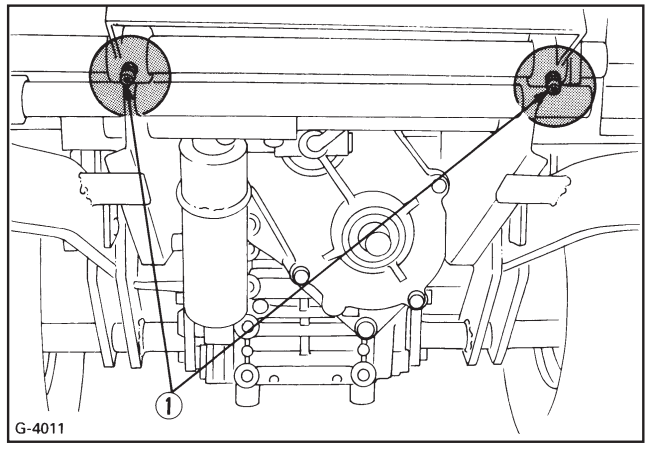

(1) Speed control pedal shaft (Grease)

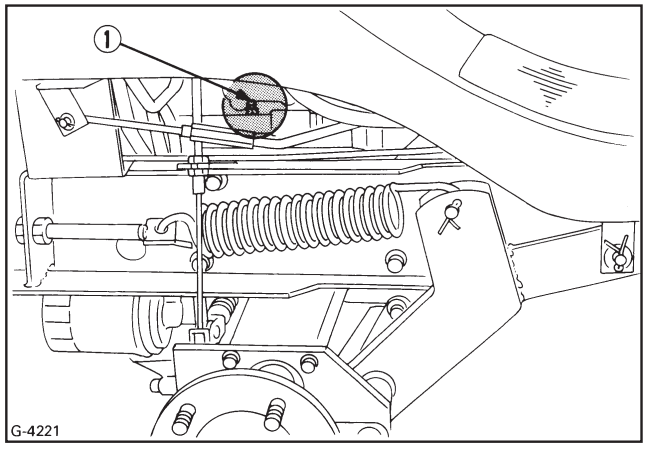

(1) PTO drive shaft (Grease)

NOTE:
- In order to apply grease to PTO drive shaft, remove tire RH.

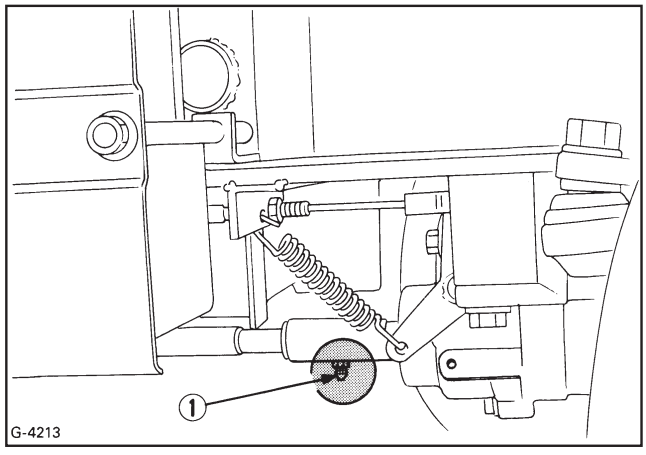

(1) Rear wheel drive shaft (4WD) (Grease)

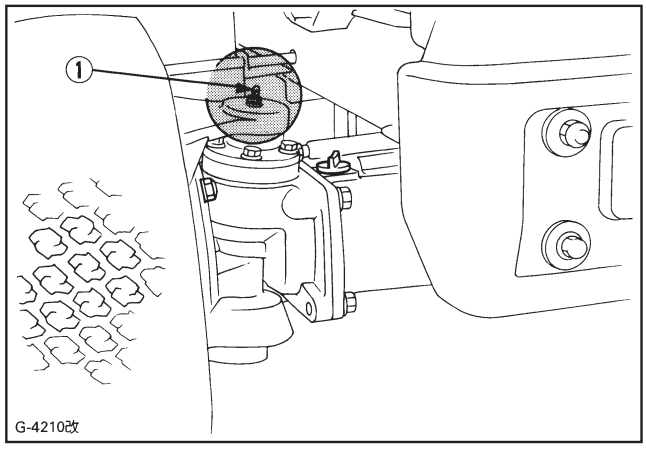

(1) Knuckle arm (4WD) (Grease)

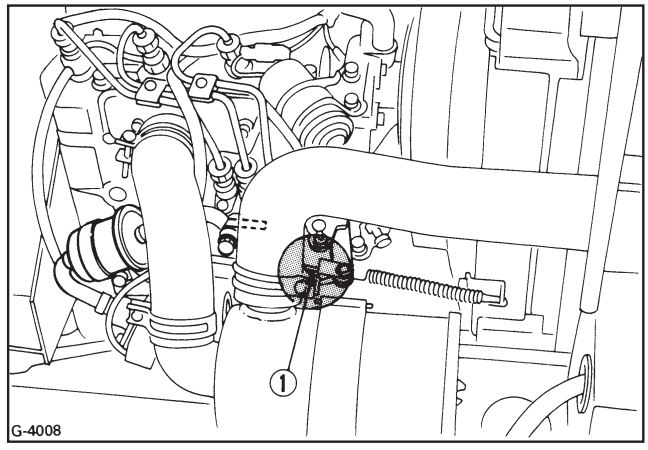

(1) Cable (Throttle) (Oil)

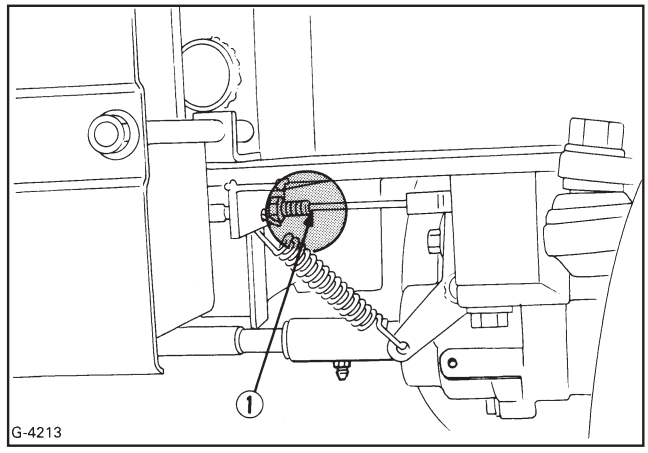

(1) Cable (4WD pedal) (Oil)

6.8 INTAKE AIR LINE

■ Checking Intake Air Line

WARNING

To avoid serious injury or death:
- **Before checking the intake air line, be sure to stop the engine.**

(1) Check to see that hoses and hose clamps are tight and not damaged.

(2) If hoses and clamps are found worn or damaged, replace or repair them at once.

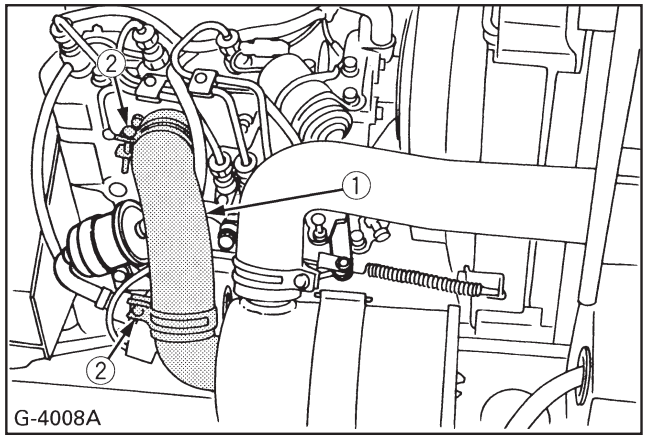

(1) Hose
(2) Hose clamps

■ Replacing Intake Air Line

Consult your local KUBOTA Dealer for this service.

6.9 RADIATOR

WARNING

To avoid serious injury or death:

- **Do not remove radiator fill cap until coolant temperature is well below its boiling point. Then loosen cap slightly to the stop to relieve any excess pressure before removing cap completely.**

WARNING

To avoid serious injury or death:

- **Before checking the radiator, be sure to stop the engine.**

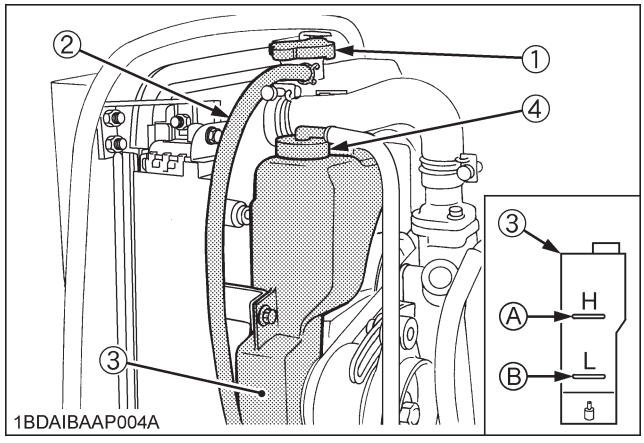

(1) Radiator cap
(2) Over flow pipe
(3) Recovery tank
(4) Recovery tank cap
(A) "HIGHEST LEVEL"
(B) "LOWEST LEVEL"

■ Checking, Flush Cooling System and Changing Coolant

(1) Check the coolant level should be between the Low and High mark. If the level is below the Low mark, remove the recovery tank cap, and add clean water and anti-freeze.

IMPORTANT:

- Do not start engine without coolant.
- When mixing the anti-freeze with water, the anti-freeze mixing ratio is 50 %.
- Use clean, fresh water and anti-freeze to fill the radiator and recovery tank.
- Securely tighten the radiator cap and recovery tank cap.

(2) If the engine is stopped by over-load during operation, in order for coolant to return from the recovery tank to the radiator, keep the engine rpm idle a little while.

(3) Remove the radiator pressure cap and check to see that the coolant level is just below the port. If short, add coolant.

(4) To drain the used coolant, open the drain valves and remove radiator cap. The radiator cap must be removed to completely drain the radiator.

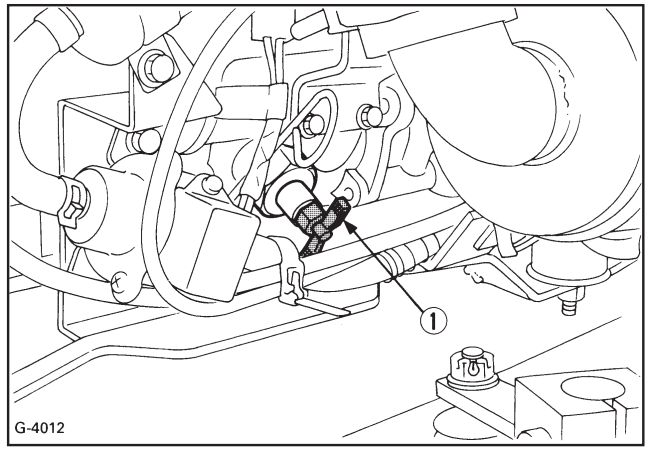

(1) Drain valve

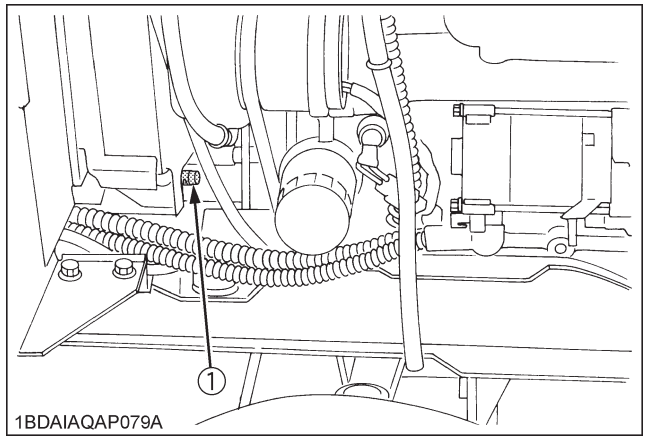

(1) Drain valve

(5) After all coolant is drained, install the drain valve.

(6) Fill with clean water and cooling system cleaner.
(7) Follow directions of the cleaner instruction.
(8) After flushing, fill with clean water and anti-freeze until the coolant level is just below the fill port on the radiator.
(9) Be sure to close the radiator cap securely. If the cap is loose or improperly closed, water may leak out and the engine could overheat.
(10) The Radiator should be filled with part anti-freeze and part water at all times as recommended by the anti-freeze manufacturer. The anti-freeze contains a corrosion inhibitor and will allow a higher operating temperature in the radiator during the hot season.
(11) Do not use an anti-freeze and scale inhibitor at the same time.

■ Checking Radiator Hoses (Water Pipes)

(1) If clamp bands are loose or water leaks, tighten bands securely.
(2) Replace hoses and tighten clamp bands securely, if radiator hoses are swollen, hardened or cracked.
Replace hoses and clamp bands if you checked and found that hoses are swollen, hardened or cracked.

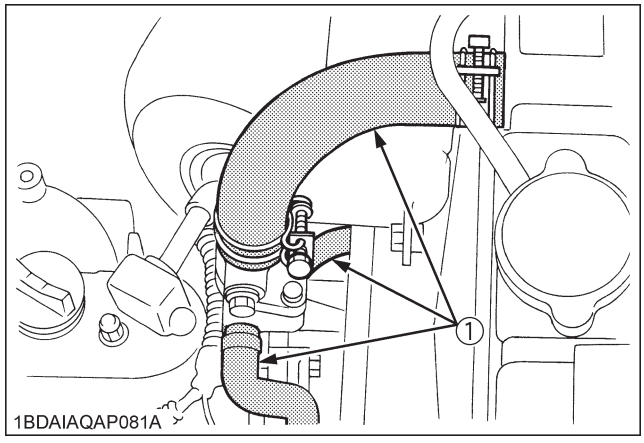

(1) Radiator hose

■ Precaution at Overheating

Take the following actions in the event the coolant temperature be nearly or more than the boiling point, what is called "Overheating".
(1) Stop the machine operation in a safe place and keep the engine unloaded idling.
(2) Don't stop the engine suddenly, but stop it after about 5 minutes of unloaded idling.
(3) Keep yourself well away from the machine for further 10 minutes or while the steam blown out.
(4) Checking that there gets no danger such as burn, get rid of the causes of overheating according to the manual, see "Troubleshooting" section. And then, start again the engine.

■ Anti-freeze

WARNING

To avoid serious injury or death:
- **When using anti-freeze, put on some protection such as rubber gloves (Anti-freeze contains poison.).**
- **If it is swallowed, seek immediate medical help. Do NOT make a person throw up unless told to do so by poison control or a health care professional. Use standard first aid and CPR for signs of shock or cardiac arrest. Call your local Poison Control Center or your local emergency number for further assistance.**
- **When anti-freeze comes in contact with the skin or clothing, wash it off immediately.**
- **Do not mix different types of Anti-freeze. The mixture can produce chemical reaction causing harmful substances.**
- **Anti-freeze is extremely flammable and explosive under certain conditions. Keep fire and children away from anti-freeze.**
- **When draining fluids from the engine, place some container underneath the engine body.**
- **Do not pour waste onto the grounds, down a drain, or into any water source.**
- **Also, observe the relevant environmental protection regulations when disposing of anti-freeze.**

Always use a 50/50 mix of long-life coolant and clean soft water in KUBOTA engines.
Consult your local KUBOTA dealer concerning coolant for extreme conditions.

(1) Long-life coolant (hereafter LLC) comes in several types. Use ethylene glycol (EG) type for this engine.
(2) Before employing LLC-mixed cooling water, fill the radiator with fresh water and empty it again. Repeat this procedure 2 or 3 times to clean up the inside.
(3) Mixing the LLC
Premix 50% LLC with 50% clean soft water. When mixing, stir it up well, and then fill into the radiator.
(4) The procedure for the mixing of water and anti-freeze differs according to the make of the anti-freeze and the ambient temperature. Refer to SAE J1034 standard, more specifically also to SAE J814c.

IMPORTANT:
- When mixing the anti-freeze with water, the anti-freeze mixing ratio is 50 %.

Vol % Anti-freeze	Freezing Point		Boiling Point *	
	°C	°F	°C	°F
50	-37	-34	108	226

* At 1.013 x 10^5 Pa (760 mmHg) pressure (atmospheric).
A higher boiling point is obtained by using a radiator

pressure cap which permits the development of pressure within the cooling system.

(5) Adding the LLC
   1. Add only water if the mixture reduces in amount by evaporation.
   2. If there is a mixture leak, add the LLC of the same manufacturer and type in the same mixture percentage.
      *Never add any long-life coolant of different manufacturer. (Different brands may have different additive components, and the engine may fail to perform as specified.)

(6) When the LLC is mixed, do not employ any radiator cleaning agent. The LLC contains anti-corrosive agent. If mixed with the cleaning agent, sludge may build up, adversely affecting the engine parts.

(7) KUBOTA's genuine long-life coolant has a service life of 2 years. Be sure to change the coolant every 2000 hours or every 2 years whichever comes faster.

NOTE:

- The above data represent industry standards that necessitate a minimum glycol content in the concentrated anti-freeze.

■ Checking and Cleaning Radiator to Prevent Overheating

Daily or after every 5 hours of operation, check to be sure the radiator screen and radiator core are clean. Dirt or chaff on the radiator screen or radiator core decrease cooling performance.

(1) Remove the radiator screen and panel screen, and remove all foreign material.

(2) Remove the dust from between the fins and the tube.

(3) Tighten the fan drive belt as necessary. For this, refer to page 38.

(4) If scale forms in the tube, clean with the scale inhibitor or its equivalent.

(5) Each time the panel screen is covered with grass during operation, rub it off the screen with hand. Check the radiator screen from time to time if grass often gets on it.

(6) If the dust or chaff is accumulated inside of the panel, remove the air intake screen and clean the inside of the panel completely.
After cleaning, place the air intake screen properly.

IMPORTANT:

- Be sure to stop the engine before cleaning the radiator screen and panel screen.

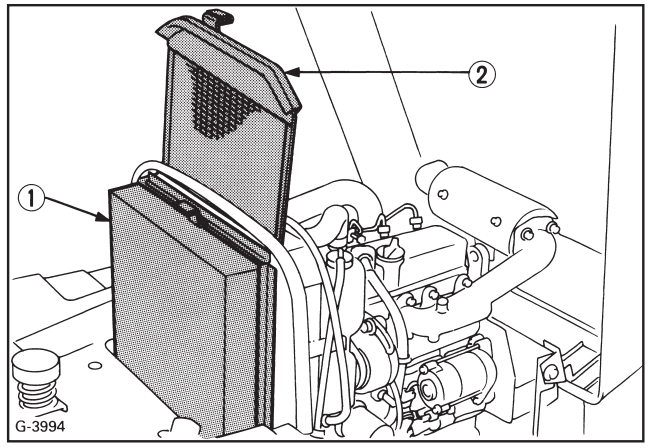

(1) Panel screen
(2) Radiator screen

6.10 AIR CLEANER

WARNING

To avoid serious injury or death:

- **Before checking, be sure to stop the engine.**

(1) The air cleaner uses a dry element, never apply oil.

(2) Do not touch the filter element except where cleaning is required. To clean the element, use clean and dry compressed air on the inside of the element. Air pressure should not exceed 205 kPa (2.1 kgf/cm^2, 30 psi).

(3) If the element is stained with carbon or oil, apply one of the following cleaners or equivalent.
ND-1400 (by Donaldson)

(4) When cleaning the air filter element, do not remove the cyclone from the air filter element, handle with care not to damage it (do not hit it), and reinstall the element correctly.
The damage of the element may cause serious trouble to the engine.

(5) Replace the air cleaner element every 1000 hours or every 1 year whichever comes faster.

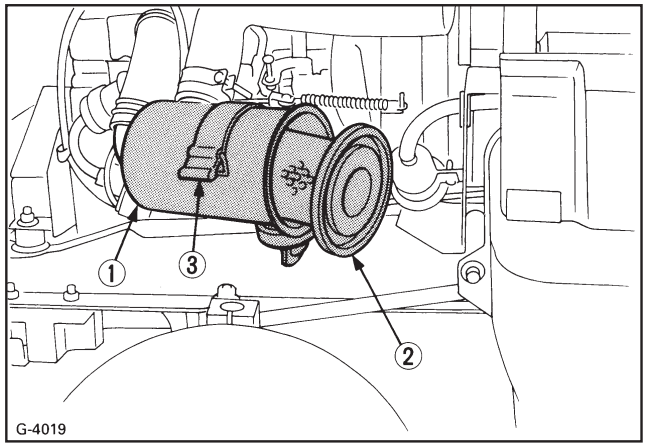

(1) Air cleaner
(2) Air cleaner element
(3) Air cleaner band

6.11 BATTERY

DANGER

To avoid the possibility of battery explosion: For the refillable type battery, follow the instructions below.

- **Do not use or charge the refillable type battery if the fluid level is below the LOWER (lower limit level) mark. Otherwise, the battery component parts may prematurely deteriorate, which may shorten the battery's service life or cause an explosion. Check the fluid level regularly and add distilled water as required so that the fluid level is between the UPPER and LOWER levels.**

WARNING

To avoid serious injury or death:

- **Never take the battery cap off while the engine is running.**
- **Keep electrolyte away from eyes, hands and clothes. If you are spattered with it, wash it away completely with water immediately.**

Mishandling the battery shortens the service life and adds to maintenance costs. Be sure to handle it correctly so that it will develop its full potential performance.

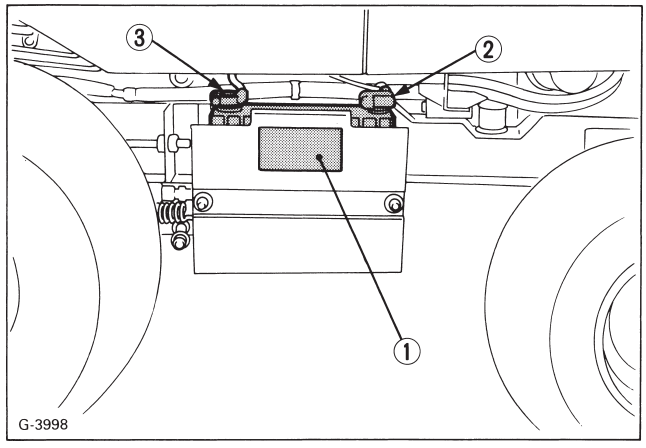

(1) Battery
(2) Positive cable (⊕)
(3) Negative cable (⊖)

If the battery is weak, the engine is difficult to start and the lights become dim. It is important to check the battery daily and recharge before trouble occurs.

■ Battery Charging

DANGER

To avoid serious injury or death:

- **When the battery is being activated, hydrogen and oxygen gases in the battery are extremely explosive. Keep open sparks and flames away from the battery at all times, especially when charging the battery.**

(1) Make sure each electrolyte level is somewhere between the markings (A) and (B). Add a proper amount of distilled water up to the highest level as required.
(2) The water in the electrolyte evaporates during recharging. Liquid shortage damages the battery and excessive liquid damages the machine body. If low, be sure to fill up the battery with distilled water only.

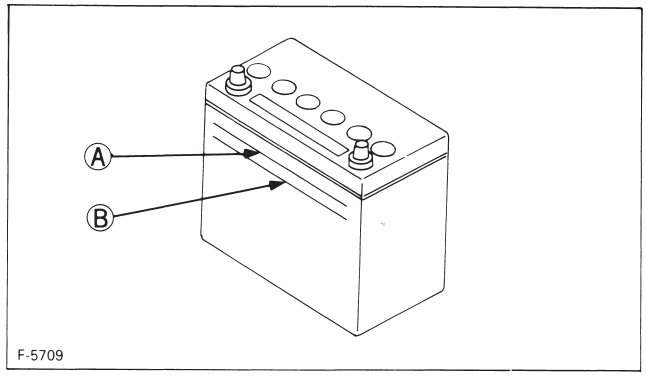

(A) "HIGHEST LEVEL" *(B) "LOWEST LEVEL"*

(3) To slow charge the battery connect the battery positive terminal to the charger positive terminal and the negative to the negative, then recharge in the standard fashion.
(4) A boost charge is only for emergencies. It will partially charge the battery at a higher rate and in a short time. When using a boost-charged battery, it is necessary to recharge the battery as early as possible. Failure to do this extremely affects its service life.

DANGER

To avoid serious injury or death:

- **When connecting the battery, do not reverse the polarities. Connection with reverse polarities will cause spark and troubles to the battery and electrical system in the tractor.**
- **When disconnecting the cable from the battery, start with the negative terminal first. When connecting, start with the positive terminal first. Reversing the steps may cause short-circuiting, should a metallic tool touch the terminals.**

■ Direction for Storage

(1) When storage the machine for long periods of time, remove the battery from the machine, adjust the electrolyte to the proper level by adding distilled water only and store in a dry place out of direct sunlight.
(2) The battery self-discharges even while it is stored. Recharge it once a month in hot seasons and once every two months in cold seasons.
(3) Nut size for the battery terminals: (+)10 mm (-)10 mm.

6.12 TIRE PRESSURE

WARNING

To avoid serious injury or death:

- **Do not attempt to mount a tire on a rim. This should be done by a qualified person with the proper equipment.**
- **Always maintain the correct tire pressure. Do not inflate tires above the recommended pressure shown in the Operator's Manual.**

IMPORTANT:

- Do not use tires other than those approved by KUBOTA.

WARNING

To avoid serious injury or death:

- **Never operate the machine with a loose rim, wheel, or axle.**
- **Whenever bolts are loosened, retighten to specified torque.**
- **Check all bolts frequently and keep them tightened.**

Though the tire pressure is factory-set to the recommended level, it naturally drops slowly in the course of time. Thus, check it every day and inflate as necessary.

Maximum tire pressures	
Front	Rear
22 psi	24 psi

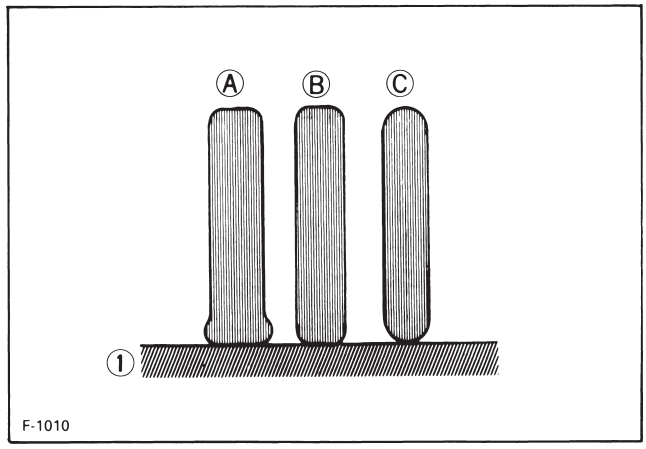

(1) Ground
(A) "INSUFFICIENT"
(B) "STANDARD"
(C) "EXCESSIVE"

6.13 FUSE

The machine electrical system is protected from potential damage by fuses.
A blown fuse indicates that there is an overload or short somewhere in the electrical system.

IMPORTANT:

- Before replacing a blown fuse, determine why the fuse blew and make any necessary repairs. Failure to follow this procedure may result in serious damage to the machine electrical system. Refer to the "TROUBLESHOOTING" section of this manual or your local KUBOTA Dealer for specific information dealing with electrical problems.

If any of the fuses should blow, replace with a new one of the same capacity. Do not use the fuse except indicated capacity.

Replacement of the fuse.
(1) Open the fender cover.
(2) Remove the lid of the fuse box.
(3) Disconnect the blown fuse.
(4) Place a new fuse of same capacity in position.
(5) Close the fender cover.

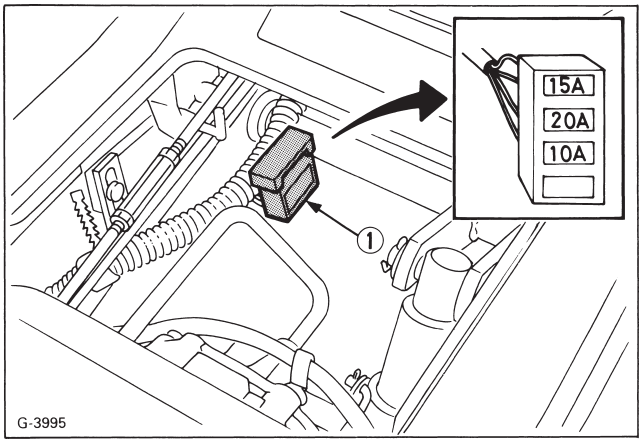

(1) Fuse box

IMPORTANT:
- If the new fuse happens to quickly blowout, contact your dealer for inspection and repair. Never use any wire or foil.

■ Fusible link

The fusible link is intended to protect the wiring. If the link breaks down, pinpoint the cause. Be sure to use the genuine part, not any substitute.

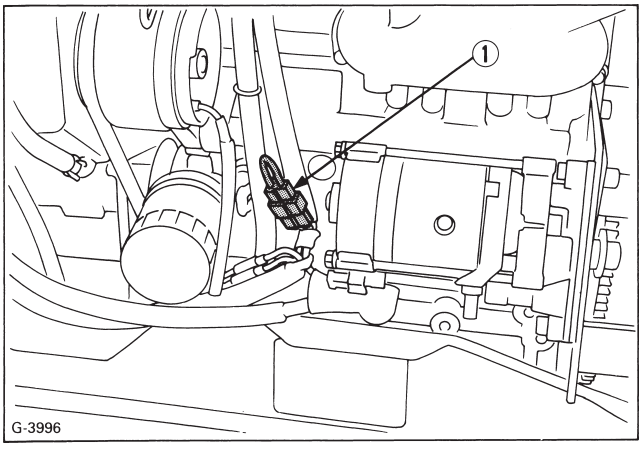

(1) Fusible link

6.14 CHECKING ENGINE START SYSTEM

The Engine Start System in your machine are designed to protect you while operating. Please check these Engine Start System periodically. It is recommended to check the Engine Start System before daily operation.

WARNING

To avoid serious injury or death:
- **Do not allow anyone near the machine while testing.**
- **If the machine does not pass one of the following tests, do not operate the machine. See your local KUBOTA Dealer.**
- **Check while seated.**

◆ **Safety switch**

Test 1: Switch for the PTO lever
(1) Depress the brake pedal fully.
(2) Shift the PTO lever to engaged position.
(3) Turn the key to START position.
(4) The engine must not crank.

Test 2: Switch for the brake pedal
(1) Disengaged PTO lever.
(2) Release the brake pedal.
(3) Turn the key to START position.
(4) The engine must not crank.

6.15 CHECKING OPC SYSTEM

The OPC (Operator Presence Control) system in your machine are designed to protect you while operating.
Please check these OPC system periodically. It is recommended to check the OPC system before daily operation.

WARNING

To avoid serious injury or death:
- **Do not allow anyone near the machine while testing.**
- **If the machine does not pass one of the following tests, do not operate the machine. See your local KUBOTA Dealer.**
- **Sit on the operator's seat for all tests.**

1. Check the following tests before operating the machine.
2. If the machine does not pass one of the following tests, do not operate the machine. See your local KUBOTA Dealer.

Test 1: Switch for the operator's seat (OPC)
(1) Lock the parking brake.
(2) "START" the engine.
(3) Release the parking brake and stand up from the operator's seat. (Do not get off the machine.)

(4) Make sure that the engine "STOPS".

Test 2: Switch for the operator's seat (OPC)

(1) Run the engine at half throttle.
(2) Engaged the PTO clutch lever.
(3) Stand up. (Do not get off the machine.)
(4) Engine must shut off.

6.16 REPLACING LIGHT BULB

1. Head light
   Take the bulb out of the light body and replace with a new one.
2. Other lights
   Detach the lens and replace the bulb.

Light	Capacity
Headlight	15 W

7. ADJUSTMENTS

WARNING

To avoid serious injury or death:

- **When making adjustments, park the machine on a level surface, apply the parking brake and stop the engine and remove the key.**

7.1 FAN DRIVE BELT TENSION

If the fan drive belt becomes loose, the engine may overheat. To adjust, loosen bolts and turn the dynamo to stretch the belt. After adjustment, securely tighten the bolts.

Moderate belt tension:
The belt should deflect approx. 10 mm (0.4 in.) when the center of the belt is depressed with finger pressure of 98 N (10 kgf, 22 lbs).

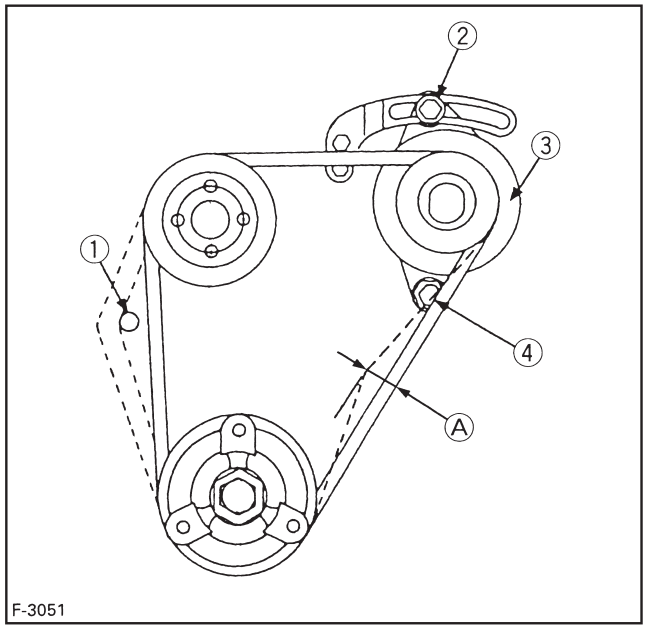

(1) Cap *(A) 10 mm (0.4 in.)*
(2) Tension bolt
(3) Dynamo
(4) Adjusting bolt

IMPORTANT:

- When replacing fan drive belt, be careful not to catch it on the cap under the water pump. See the illustration above.

7.2 BRAKE

■ Check and Adjustment of the Brake Pedal

(1) The pedal free travel S1 to the beginning of brake engaged should be from 10 to 50 mm (0.4 to 2.0 in.) for 2WD, from 20 to 60 mm (0.8 to 2.3 in.) for 4WD.
(2) If the free travel S1 is not correct, loosen the lock nut (2) and turn the nut (3) until the proper stroke is achieved.
(3) After adjustment, securely retighten the lock nut.

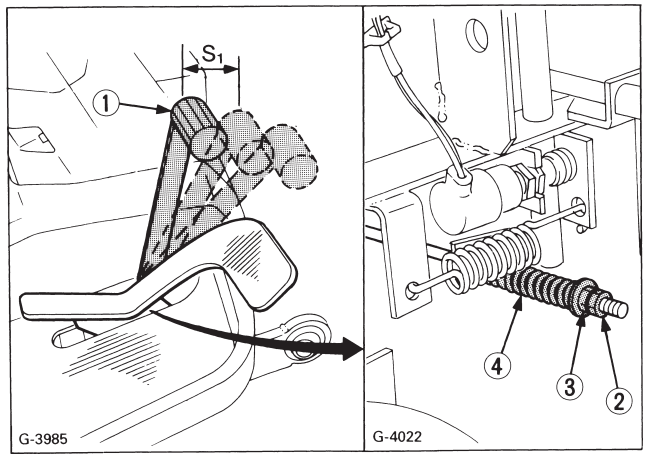

(1) Brake pedal *(3) Nut*
(2) Lock nuts *(4) Spring*

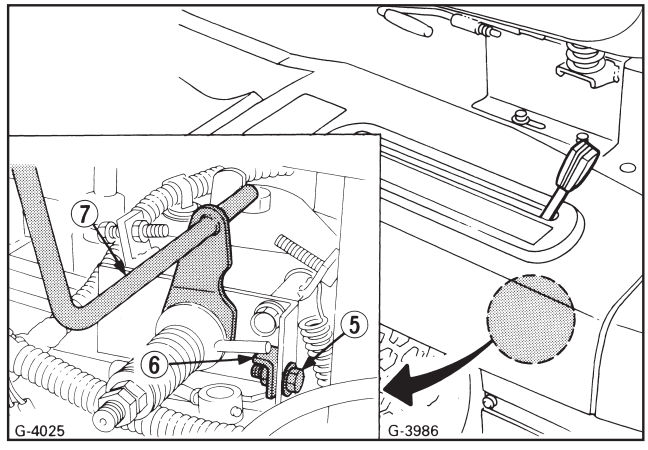

(5) Bolt *(6) Stopper* *(7) Speed set lever*

■ Check the Speed Set Device Release

The brake pedal stroke concerns with the speed set device.
(1) Check the speed set device works and release automatically when the brake pedal is depressed fully.
(2) If not, loosen the bolt (5) and slide the stopper (6) to the proper position.

7.3 REAR AXLE (2WD)

■ Check and Adjustment of the Rear Axle End Play

(1) Jack up the rear of frame.
(2) Measure the clearance (l) between the rear axle (3) and rear axle support (5).
(3) If the measurement exceeds the allowable limit, adjust the nut (1).

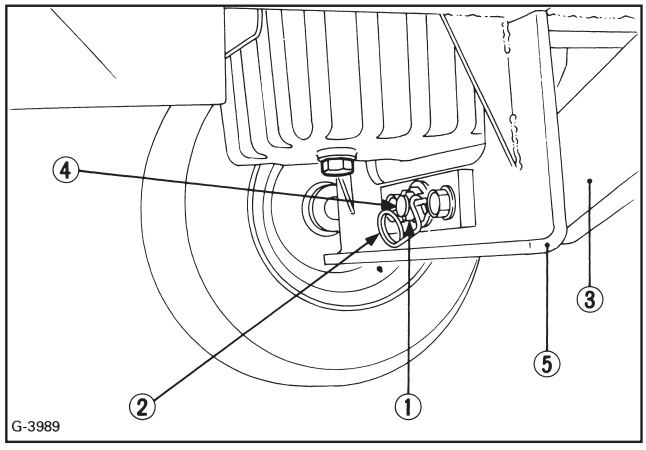

(1) Nut
(2) Spring lock pin
(3) Rear axle
(4) Center pin
(5) Rear axle support

NOTE:

- When fastening the center pin (4), first tighten the nut (1) until the rear axle can turn smoothly, then loosen the nut the nearest pin hole is reached, and finally put the spring lock pin in position.

Rear axle end play (l)	Factory spec.	0.1 to 0.4 mm
	Allowable limit	1.0 mm

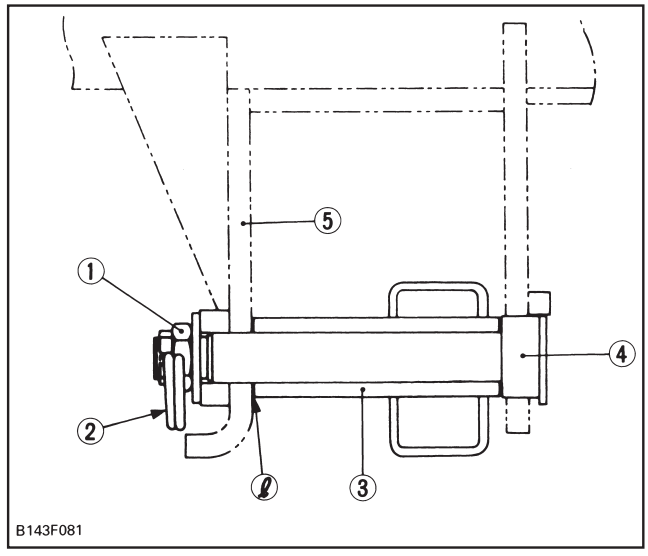

(1) Nut
(2) Spring lock pin
(3) Rear axle
(4) Center pin
(5) Rear axle support
(l) Rear axle end play

8. TROUBLESHOOTING

8.1 BATTERY TROUBLESHOOTING

Trouble	Cause	Remedy	Preventive measure
Starter does not function.	● Battery overused until lights are dim.	● Charge battery sufficiently.	● Charge the battery properly.
	● Battery has not been recharged.		
	● Poor terminal connection.	● Clean the terminal and tighten securely.	● Keep the terminal clean and tight. Apply grease and treat with anti-corrosives.
	● Battery life expired.	● Renew battery.	
From beginning starter does not function, and lights soon become dim.	● Insufficient charging.	● Charge battery sufficiently.	● Battery must be seviced properly before initial use.
When viewed from top, the top of plates looks whitish.	● Battery was used with an insufficient amount of electrolyte.	● Add distilled water and charge the battery.	● Regularly check the electrolyte level.
	● Battery was used too much without recharging.	● Charge battery sufficiently.	● Charge the battery properly.
Recharging is impossible.	● Battery life expired.	● Replace battery.	
Terminals are severely corroded and heat up.	● Poor terminal connection.	● Clean the terminal and tighten securely.	● Keep the terminal clean and tight. Apply grease and treat with anti-corrosives.
Battery electrolyte level drops rapidly.	● There is a crack or pin holes in the electrolytic cells.	● Replace battery.	

If you have any questions, contact your KUBOTA dealer.

8.2 MACHINE TROUBLESHOOTING

Trouble	Cause	Remedy
Machine operation is not smooth.	● Hydrostatic transmission fluid is insufficient. ● Filter is clogged. ● Strainer is clogged.	● Replenish oil. ● Replace the filter. ● Clean the strainer.
Machine does not move while engine is running.	● Parking brake is on. ● Transmission fluid level is insufficient.	● Release the parking brake. ● Replenish oil.
Machine moves when speed control pedal is not depressed. (Engine is operated.)	● Hydrostatic lever linkage is not correctly adjusted.	● Ask your dealer for hydrostatic lever linkage adjustment or pressure adjustment.

If you have any questions, contact your KUBOTA dealer.

8.3 ENGINE TROUBLESHOOTING

If the engine is not performing correctly, refer to the table below for the cause and its corrective measure.

Trouble	Cause	Remedy
Engine is difficult to start.	● No fuel flow.	● Check the fuel tank and the fuel filter, and remove dirt build-up. ● Replace filter if necessary.
	● Air and water is in the fuel system.	● Check to see if the fuel lines are tight. Bleed the fuel system. (see page 24)
	● In winter, oil viscosity increases, and engine cranks slow.	● Use oils of different viscosities, depending on ambient temperatures.
	● Battery is discharged and the engine will not crank.	● Charge the battery. ● In cold weather, always remove the battery, charge it and store it indoors. Install it only when the machine is going to be used.
Insufficient engine power.	● Insufficient fuel. ● The air cleaner is clogged.	● Check the fuel system. ● Clean the element.
Engine stops suddenly.	● Insufficient fuel.	● Refuel. ● Bleed the fuel system.
Exhaust fumes are colored.	● Fuel quality is poor.	● Change the fuel.
Engine Overheats.	● Engine overloaded.	● Lower speed or reduce load.
	● Low coolant level.	● Fill cooling system to proper level; check radiator and hoses for loose connections or leaks.
	● Loose or damaged fan belt.	● Adjust fan belt.
	● Dirty radiator core or grille screens.	● Remove all trash.
	● Coolant flow route corroded.	● Flush cooling system.

If you have any questions, contact your KUBOTA dealer.

9. LONG-TERM STORAGE

WARNING

To avoid serious injury or death:

- **To reduce fire hazards, allow the engine and exhaust system to cool before storing the vehicle in an enclosed space or near combustible materials.**
- **Do not operate the engine in a closed room. The air will be polluted with exhaust gas which is very dangerous.**
- **Do not clean the machine with engine running.**
- **When storing, remove the key from the key switch to avoid unauthorized persons from operating the machine and getting injured.**

When the machine is not going to be operated for two or three months or longer, clean the machine and perform the following operations before storage.

(1) Repair the parts where needed.
(2) Check bolts and nuts, tighten as necessary.
(3) Apply grease or engine oil to parts most likely to rust.
(4) Inflate the tires to a little above the standard pressure levels.
(5) Change the engine oil and run the machine for five minutes so that the oil circulates through the entire system.
(6) Drain fuel tank and run engine to eliminate fuel from the lines.
(7) Drain the cooling system.
(8) Lower the implement to the ground.
(9) Remove the battery from the machine, recharge it, adjust the electrolyte to the proper level, and store in a dry place out of direct sunlight.
(10) The battery runs down over time even while in storage. Recharge it once a month in hot seasons and once every two months in cold seasons.
(11) Store the machine where it is dry and sheltered from rain. Further cover the machine with a tarpaulin.
(12) When leaving the machine outdoors, protect the muffler opening from rain.

STORING AND HANDLING FUEL

(1) Buy clean, high quality fuel from a reliable supplier.

IMPORTANT:

- Keep dirt, scale, water or other foreign material out of fuel.

(2) Keep fuel in a clean container in a protected area away from buildings.
(3) Drain water and sediment from storage tank regularly.
(4) Keep storage tank on its side with plug up.
(5) Avoid storing fuel for a long time. If you keep fuel for a long time, add a fuel conditioner to prevent water condensation and varnish. See your KUBOTA dealer for conditioner.

IMPORTANT:

- Remove the mower deck shield and clean all debris off deck. Paint any surfaces that have exposed metal.

10. WIRING DIAGRAM

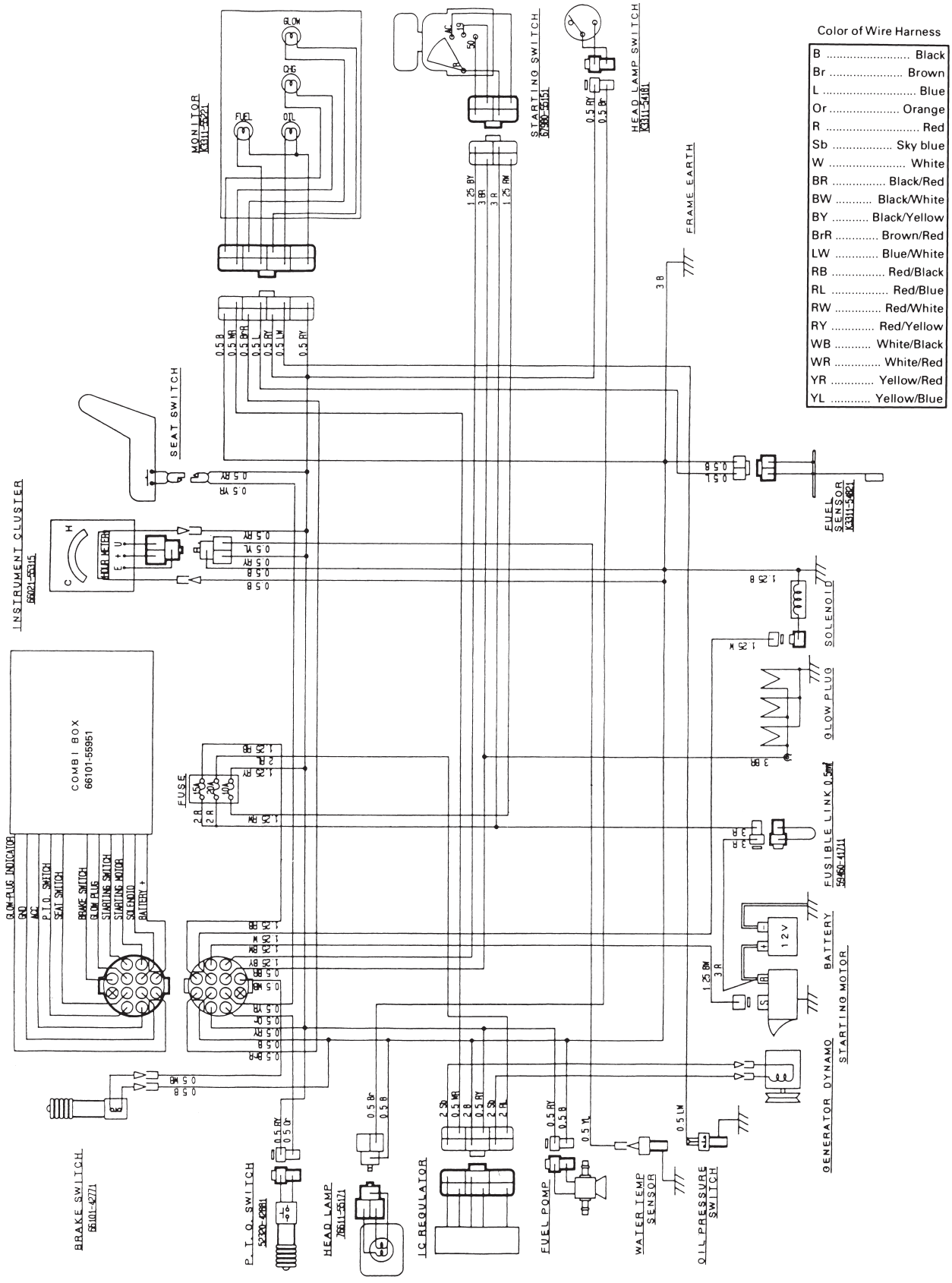

ROTARY MOWER

MODELS RC48-F19, RC54-F19, RC60-F19

ABBREVIATION LIST

Abbreviations	Definitions
PTO	Power Take Off
SAE	Society of Automotive Engineers
r/s	Revolutions per second
rpm	Revolutions per minute
fpm	Feet per minute
m/s	Meters per second
ROPS	Roll-Over Protective Structures
RH	Right Hand
LH	Left Hand
4WD	Four Wheel Drive
Hi-Lo	High speed–Low speed
DT	Dual Traction 【4WD】

FOREWORD

You are now the proud owner of a KUBOTA RC48-F19, RC54-F19, RC60-F19 ROTARY MOWER. This rotary mower is a product of KUBOTA's quality engineering and manufacturing. It is made of excellent materials and under a rigid quality control system. It will give you long, satisfactory service. To obtain the best use of your machine, please read this manual carefully. It will help you become familiar with the operation of the machine and contains many helpful hints about machine maintenance. It is KUBOTA's policy to utilize, as quickly as possible, every advance in our research. The immediate use of new techniques in the manufacturing of products may cause some small parts of this manual to become outdated. KUBOTA distributors and dealers will have the most up-to-date information. Please do not hesitate to consult them.

SAFETY FIRST

This symbol, the industry's "Safety Alert Symbol", is used throughout this manual and on labels on the machine itself to warn of the possibility of personal injury. Read these instructions carefully. It is essential that you read the instructions and safety regulations before you attempt to assemble or use this unit.

DANGER : Indicates an imminently hazardous situation which, if not avoided, will result in death or serious injury.

WARNING : Indicates a potentially hazardous situation which, if not avoided, could result in death or serious injury.

CAUTION : Indicates a potentially hazardous situation which, if not avoided, could result in minor or moderate injury.

IMPORTANT : Indicates that equipment or property damage could result if instructions are not followed.

NOTE : Gives helpful information.

CONTENTS

⚠SAFE OPERATION 1

1. SERVICE.....3
2. INTRODUCTION.....3
2.1 SPECIFICATIONS.....3
2.2 MOWER DECK TERMINOLOGY.....4
3. SETTING UP.....5
3.1 PRE-ASSEMBLY.....5
3.2 SETTING UP THE MOWER 5
4. MOUNTING AND DISMOUNTING THE MOWER.....7
5. OPERATION 8
5.1 MAKING THE MOST OF YOUR MOWER 8
5.2 CUTTING HEIGHT.....8
5.3 OPERATING MOWER 9
6. MAINTENANCE.....10
6.1 MAINTENANCE CHECK LIST.....10
6.2 CHECK AND MAINTENANCE 10
6.3 BLADE REPLACEMENT.....11
6.4 BELT REPLACEMENT.....13
6.5 ADJUSTING THE LIFT RODS 13
6.6 FRONT GAUGE WHEEL 13
6.7 ADJUSTING THE LIFT SPRINGS (2WD).....14
6.8 TIGHTENING TORQUE CHART.....14
7. TROUBLESHOOTING.....15

SAFE OPERATION

Careful operation is your best insurance against an accident. Read this section carefully before operating the mower. All operators, no matter how much experience they may have had, should read this and other related manuals before operating mower. It is the owner's obligation to instruct all operators in safe operation.

1. Keep bystanders at a safe distance from the machine during mowing operations.
2. Prior to mowing operations, clear area to be mowed of all objects which might be picked up and thrown by the mower. Mow only in daylight or in good artificial light.
3. Do not wear loose clothing while operating the mower. Loose clothing could become entangled in moving parts, causing personal injury.
4. Do not stand on the mower.
5. Before dismounting the front mower.
   a) Shut off the engine,
   b) remove the key,
   c) set the parking brake,
   d) allow the blades to stop.
6. Securely tighten all hardware before operating the mower.
7. Read this manual and the front mower operator's manual before operating mower. Allow only a properly trained person to operate the front mower.
8. Before starting the engine, disengage the FRONT PTO and shift the front mower transmission into neutral.
9. Hillside operation is dangerous and is not recommended.
   If it is necessary to mow on a hillside, use extreme caution. Never mow across the face of a slope.
10. While making turns in rough terrain, reduce front mower speed.
11. Upon striking a foreign object, stop and inspect the front mower and the mower for damage.
    Repair the damage before resuming equipment operation.
12. If the mower discharge deflector becomes clogged, stop the front mower; disengage the mower drive; shut off the engine and remove the key, and clean out the deflector before continuing.
13. Know how to stop the mower and engine quickly.
    Be prepared for any emergency situation.
14. When mowing in rough terrain or in high grass, set the mower at the highest cutting level to reduce the possibility of the mower striking debris or hidden objects.
15. Before operating the front mower in reverse, look to see if the area is clear of all objects.
16. Do not operate the mower without all shields, guards and ROPS in place.
17. KUBOTA recommends the use of ROPS and seat belt in almost all applications.
    Always use seat belt when the front mower is equipped with a ROPS.
    Never use the seat belt when the front mower is not equipped with a ROPS.
18. Never attempt to make adjustment or repairs of any kind while the front mower and mower are running. Shut off the engine, remove the key and allow the blades to stop.
19. Replace damaged or illegible safety decals.
    See next page for required labels.

MOWER SAFETY LABELS

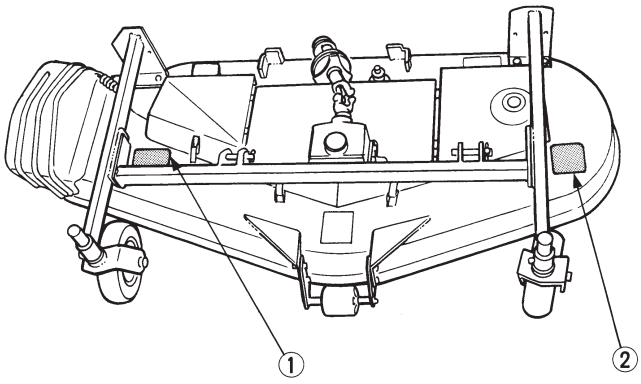

G-4034

LABEL① Part No. 66071—6178—1

LABEL② Part No. 66071—6179—1

CARE OF SAFETY LABELS

(1) Keep safety labels clean and free from obstructing material.
(2) Clean safety labels with soap and water, dry with a soft cloth.
(3) Replace damaged or missing safety labels with new labels from your KUBOTA dealer.
(4) If component(s) with safety label(s) affixed is (are) replaced with new part(s), make sure new safety label(s) is (are) attached in the same location(s) as the replaced components.
(5) Mount new safety labels by applying on clean, dry surface and pressing any bubbles to outside edge.

1. SERVICE

(1) When in need of parts or of service, give the serial number of the Mower to the dealer.
(2) The serial number is located on the right side of the deck.
(3) For your reference, please record the serial number in the space provided.

KUBOTA MOWER
MODEL.....
SERIAL NUMBER .....
DATE OF PURCHASE .....
NAME OF DEALER.....

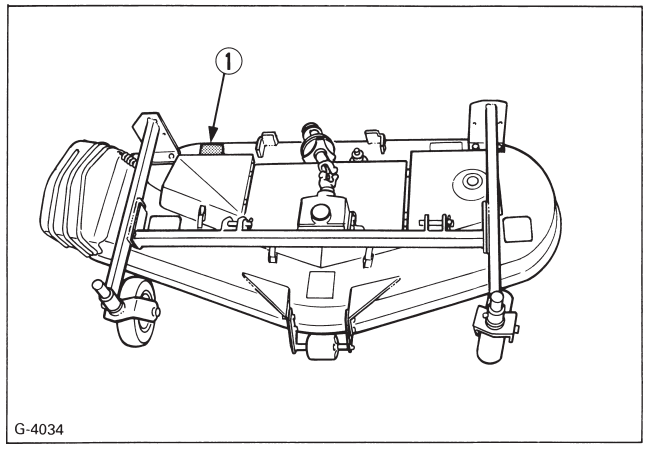

(1) Serial number

2. INTRODUCTION

2.1 SPECIFICATIONS

Model			RC48-F19	RC54-F19	RC60-F19
Mounting method			2 point linkage		
Adjustment of cutting height			Gauge wheel		
Cutting width		mm (in.)	1224 (48)	1372 (54)	1524 (60)
Cutting height		mm (in.)	25 to 102 (1.0 to 4.0)		
Weight (Approx.)		kg (lbs.)	95 (209)	112 (247)	125 (275)
Blade spindle speed		rpm (r/s)	3646 (60.8)	3255 (54.2)	2929 (48.8)
Blade tip velocity		fpm (m/s)	15930 (80.9)	15930 (80.9)	15790 (80.2)
Blade length		mm (in.)	424 (16.7)	475 (18.7)	523 (20.6)
Number of blades			3		
Dimensions	Total length	mm (in.)	770 (30.3)	805 (31.7)	858 (33.8)
	Total width	mm (in.)	1535 (60.4)	1737 (68.4)	1864 (73.4)
	Total height	mm (in.)	407 (16.0)		

2.2 MOWER DECK TERMINOLOGY

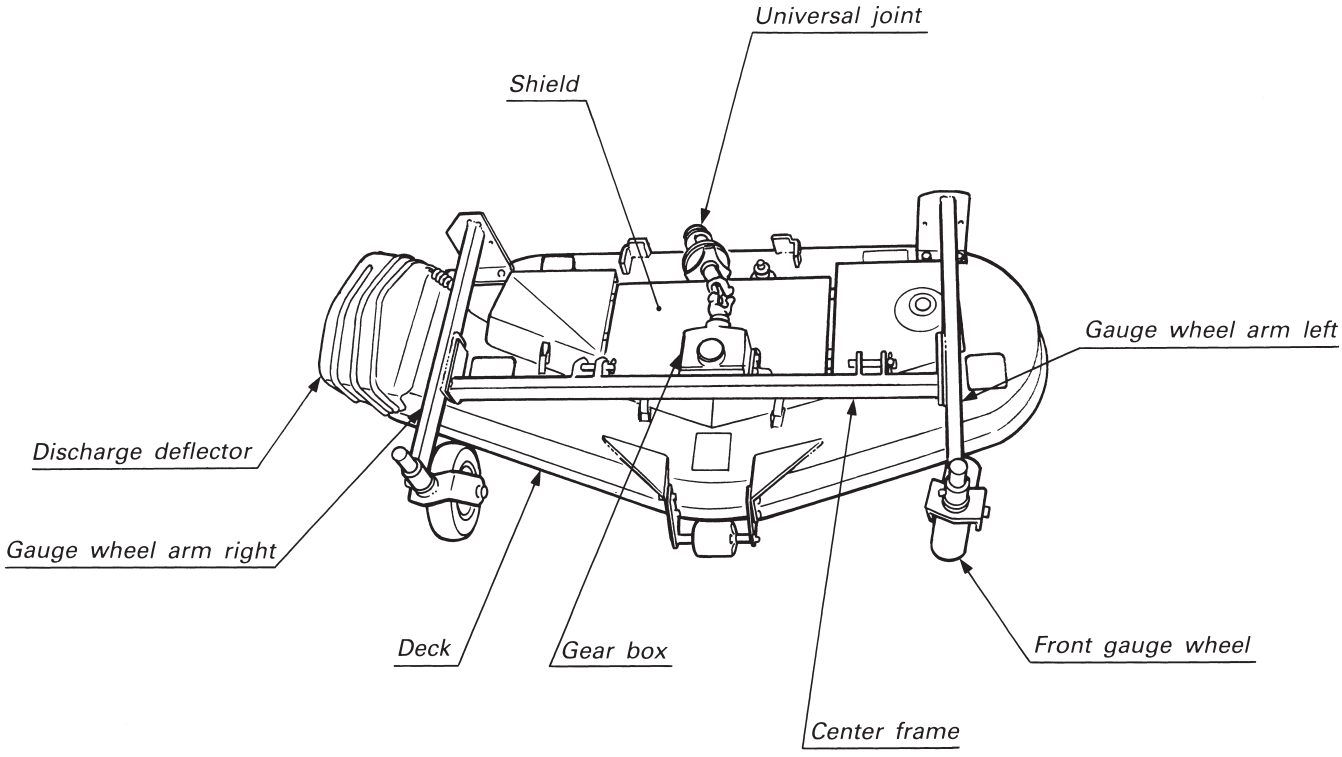

G-4034

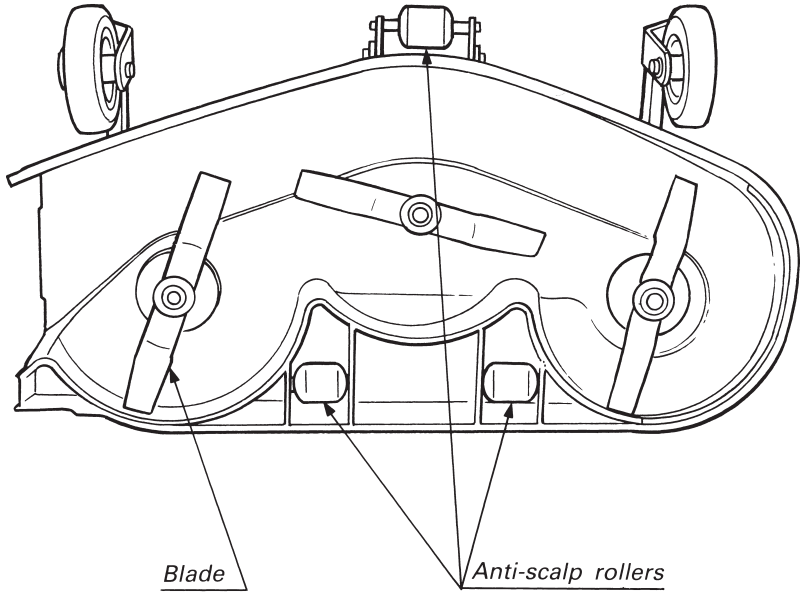

G-4035

3. SETTING UP

When the RC48-F19, RC54-F19, RC60-F19 are shipped, some of the parts are removed and packed separately. Read the following procedure to properly assemble the mower.

3.1 PRE-ASSEMBLY

Take out all mower components from the case and check the parts by the illustration.

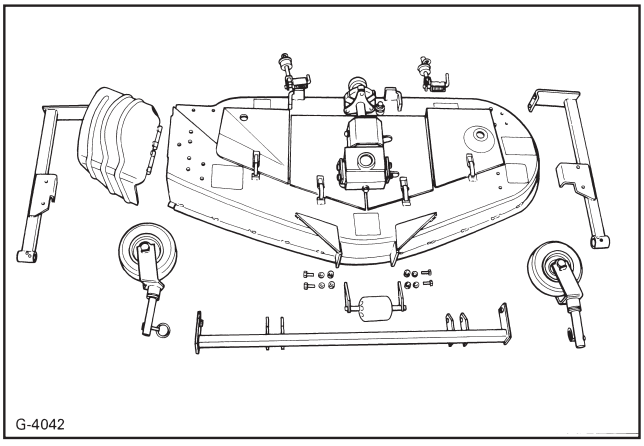

3.2 SETTING UP THE MOWER

(1) Attach both gauge wheel arms and center frame to the deck with M10 bolts, spring washers, flat washers and nuts.

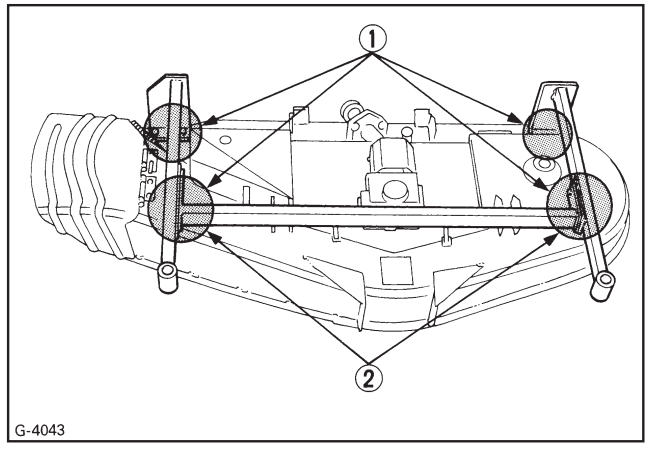

(1) 8-M10 x 28 bolts, Spring washers, Flat washers and nuts
(2) 4-M10 x 25 bolts

(2) Attach the front gauge wheels to the arms with clevis pins and snap rings.

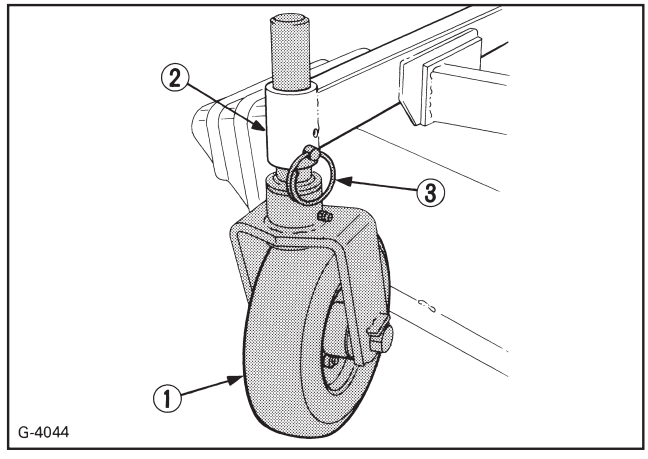

(1) Front gauge wheel
(2) Gauge wheel arm
(3) Clevis pin ϕ10 x 55, Snap ring

(3) Attach the front anti-scalp roller and brackets to the deck with M10 bolts.

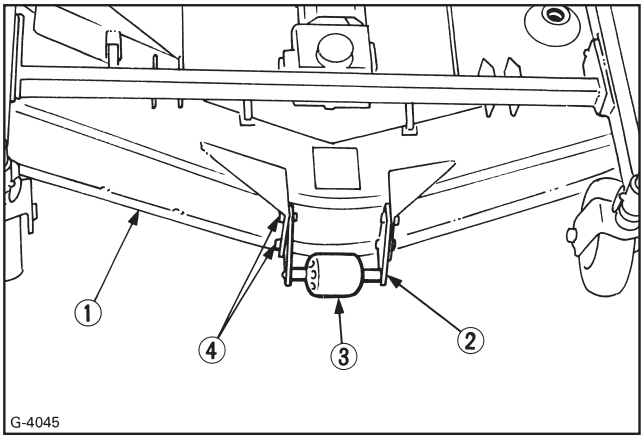

(1) Deck
(2) Bracket
(3) Scalp roller
(4) 4-M10 x 25 bolts

(4) Attach the discharge deflector, deflector stopper and spacers (RC48 only) to the deck with M10 bolts, spring washers and nuts. Secure the spring to the discharge deflector as illustrated.

NOTE:

- Be sure to direct the deflector stopper as shown.

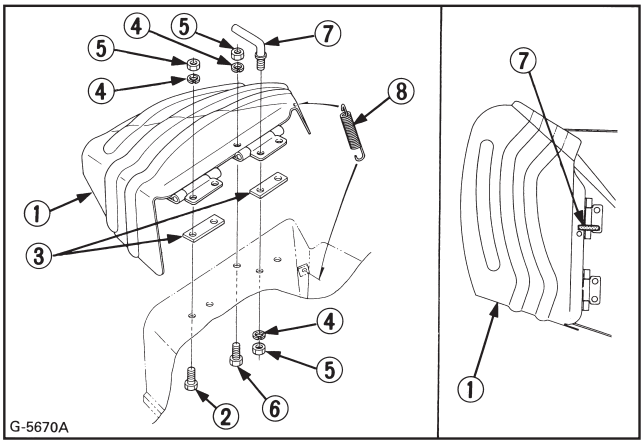

(1) Discharge deflector
(2) Bolt (3-M10 x 25)
(3) Spacer (RC48 only)
(4) Spring washer
(5) Nut
(6) Bolt
RC48: M10 x 35
RC54, 60: M10 x 28
(7) Deflector stopper
(8) Spring

(5) Attach the anti-scalp roller with roller pin, plain washer and cotter pin at hole (A).

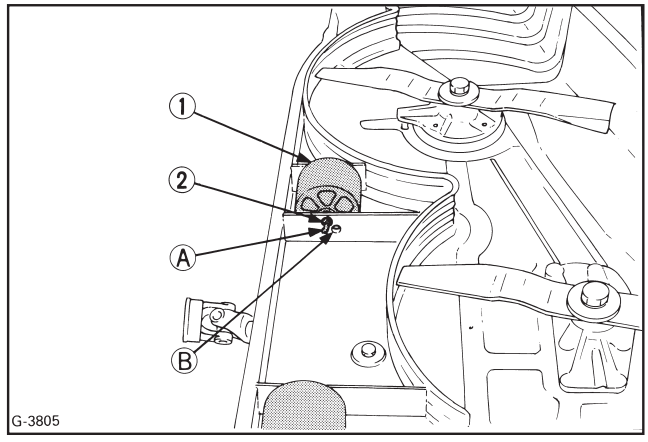

(1) Anti-scalp roller
(2) Roller pin, Plain washer, Cotter pin
(A) Hole
(B) Hole

4. MOUNTING AND DISMOUNTING THE MOWER

(1) Push the mower deck under the mower links.

WARNING

To avoid serious injury or death:

- **The mower links (left hand, right hand) are spring-loaded. Have an assistant hold the arm in position when mounting mower deck.**

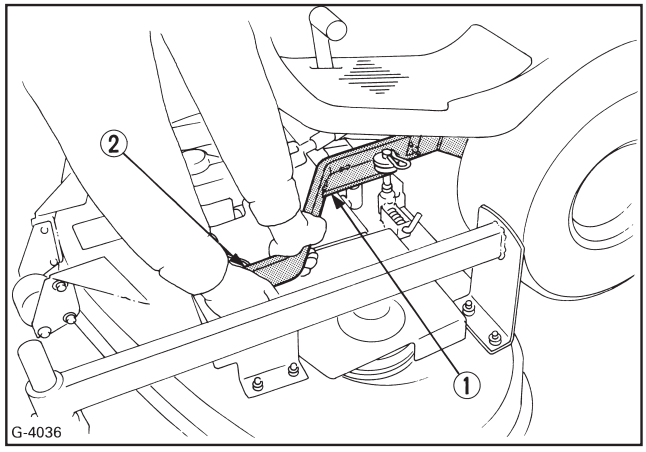

(1) Mower link
(2) Set pin, Clevis pin

(2) Attach the front end of the mower links to the mower deck with clevis pins and hairpins.
(3) Start engine, raise implement, and shut off the engine.
(4) Install the lift rods to the mower deck with lock pins.

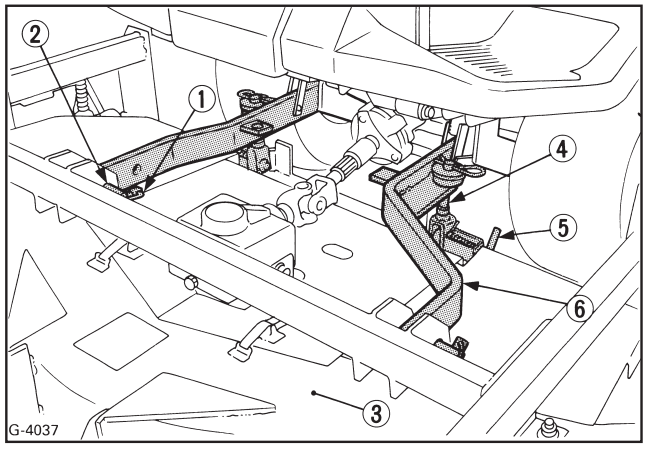

(1) Set pin
(2) Clevis pin
(3) Mower deck
(4) Lift rod
(5) Lock pin
(6) Mower link

(5) Pull back coupler of the universal joint.
Push the universal joint onto the PTO shaft until the coupler locks.
Slide the universal joint back and forward to make sure the universal joint is locked securely.

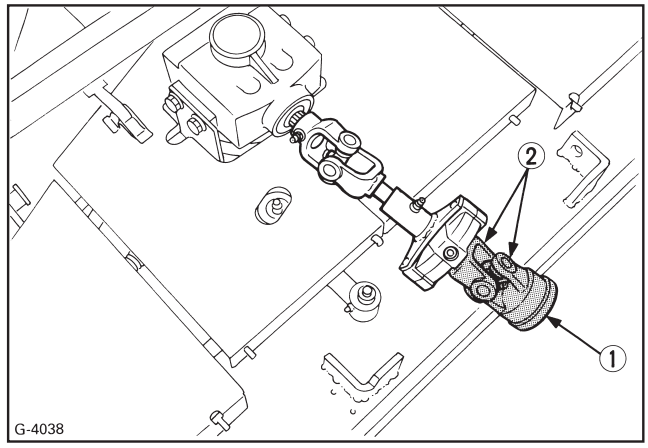

(1) Coupler
(2) Yoke

IMPORTANT:

- Finally pull the universal joint to see if it is tight in position.

(6) To dismount the mower, reverse the above procedure.

5. OPERATION

5.1 MAKING THE MOST OF YOUR MOWER

(1) When using your mower for the first time, choose a smooth level area and cut in straight and slightly overlapping strips.

(2) The size and type of the area to be mowed will determine the proper mowing pattern. Take into account obstructions, such as trees, fences and buildings. To keep grass cuttings off fences, sidewalks, etc., it is advisable to go over the outside of the area to be mowed several times in a clockwise direction. To mow the area remaining, work in a counterclockwise direction so the cuttings are dispersed onto the previously cut area.

(3) Always keep the left side of the mower toward trees, posts or other obstacles on the first trip around the obstacle.

(4) Most lawns should be mowed to keep the grass approximately 50 to 80 mm (2 to 3 in.) high. Best results are obtained by cutting often and not too short. To keep a green lawn, never mow more than one third of the height of the grass or a maximum of 25 mm (1 in.) in one mowing.
For extremely tall grass, set the cutting height at maximum height for the first mowing, then reset to the desired height and mow again. Allow the grass to grow to 8 cm (3 in.), then cut off only the top inch.

(5) On thick, springy grass or soft ground, the mower rollers may sink into ground giving too low a cut.
Adjust the cutting height to get the desired height of cut.

(6) For best appearance, grass should be cut in the afternoon or evening when it is free of moisture.

5.2 CUTTING HEIGHT

DANGER

To avoid serious injury or death:

- **Never operate mower in transport position.**

(1) Check the both front gauge wheel pressures daily and inflate as necessary to prevent uneven cutting height. (See page 13)

(2) To set the cutting height, adjust the front gauge wheels, lift rods. Cutting height can be adjusted from 25 to 102 mm (1.0 to 4 in.).

NOTE:

- For easy adjusting of the lift rods, place a wooden block under the rear end of the mower deck before lowering the mower deck.
- Cutting height will change because of the ground condition.

	FRONT WHEEL	LIFT ROD	ANTI-SCALP ROLLER
CUTTING HEIGHT	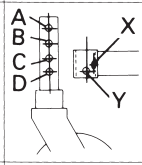	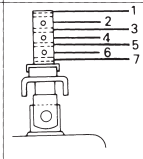	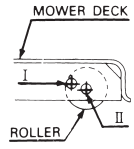
25mm(1 in.)	D—X	1	
38mm(1½in.)	D—Y	2	
51mm(2 in.)	C—X	3	
64mm(2½in.)	C—Y	4	II
76mm(3 in.)	B—X	5	
89mm(3½in.)	B—Y	6	
102mm(4 in.)	A—X	7	

(3) Lower the mower deck by pushing the hydraulic control lever forward. This lowers the mower deck from the transport position to the operating position.

(4) Use the higher setting for mowing in a rough area or when mowing high grass. Lower setting should be used only for smooth lawns where short grass is desired.

5.3 OPERATING MOWER

DANGER

To avoid serious injury or death:

- **Do not operate the mower without discharge deflector properly bolted in place.**

WARNING

To avoid serious injury or death:

- **Clear the work area of objects which might be picked up and thrown.**
- **Do not direct the opening of the deflector at bystanders or animals. Ejected objects may cause injury. Plan your mowing carefully before starting operations.**
- **Keep bystanders and animals away from the mowing area.**
- **Be sure to disengage the front PTO clutch of the mower before starting the engine.**

(1) Keep the engine running at full throttle for best results. Control travel speed by speed control pedal.
(2) During heavy duty use, operate the machine at a slower ground speed or go over the area twice.
(3) Keep the mower deck and gauge wheels in the raised position when the mower is not being used.
(4) The mower will not cut cleanly if the ground speed is too high or if the blade speed drops due to an overload.

NOTE:

- To prevent the engine from overheating, keep the radiator and radiator net clean.

6. MAINTENANCE

6.1 MAINTENANCE CHECK LIST

No.	Check Point	Used hours (Change or check every interval shown below)												Reference page
		daily check	50	100	150	200	250	300	350	400	1 year	4 years	After since	
1	Anything unusual in previous day's operation	○												—
2	Oil leakage check	○												10
3	Make sure blade cap screws are tight.	○												11, 12
4	Blade and belt wear check	○												12, 13
5	All hardware check	○												—
6	Make sure all pins are in place.	○												—
7	Mower deck cleaning	○												—
8	Gear box oil check	○												10
9	Gear box oil change		◎ *1		○			○					every 150 hrs.	10
10	Greasing ● Front gauge wheel brackets		○	○	○	○	○	○	○	○			every 50 hrs.	11
	● Three spindle shafts ● Universal joint ● Belt tension pivot and tension pulley	○												11
11	Gear box oil seal check										★		1 year	—
12	Gear box oil seal replace											○	4 years	—

IMPORTANT:
- The jobs indicated by ◎ must be done after the first time at 50 hrs.

★ Replace if any deterioration (crack, hardening, scar, or deformation) or damage occurred.

NOTE:
*1 The initial 50 hours should not be a replacement cycle.

6.2 CHECK AND MAINTENANCE

WARNING

To avoid serious injury or death:
- **Stop the engine, set the parking brake, and remove the key.**

■ Gear box oil

(1) To check the oil level, remove the check plug (bolt).
- Place mower on level surface.

  Loosen the check plug. Oil must seep from the opening. If low add oil.

  (Use SAE 90 gear oil)

  0.4 L (0.42 qts.)... RC54, RC60

  0.35 L (0.37 qts.)... RC48

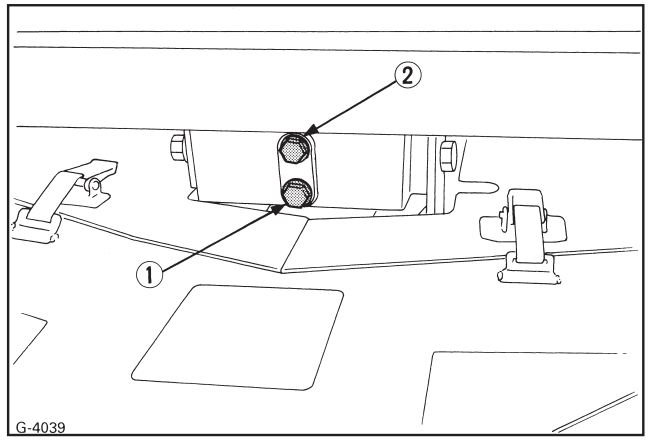

(1) Drain plug (Bolt) *(2) Inlet and check plug (Bolt)*

IMPORTANT:
- Do not exceed check plug level.

■ Greasing (Use multipurpose EP2 grease (NLGI Grade No.2).)

(1) Universal joint.

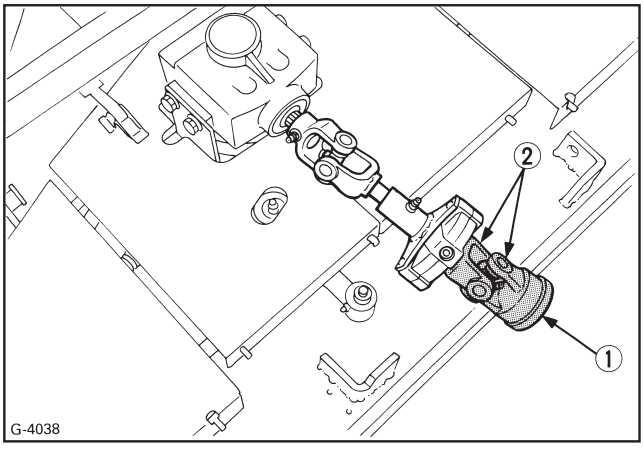

(1) Grease fittings

(2) Front gauge wheel brackets.

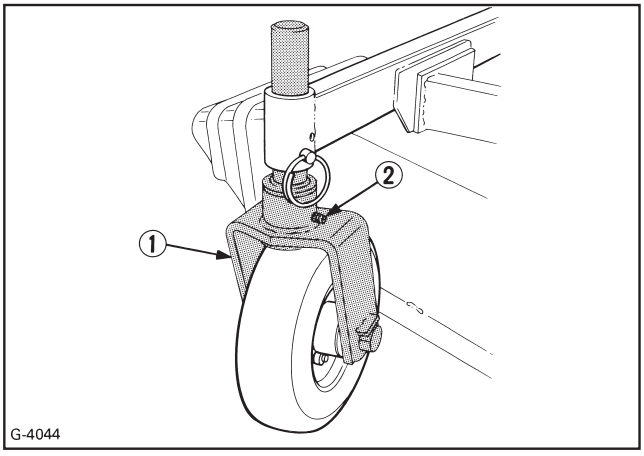

(1) Front gauge wheel bracket
(2) Grease fitting

(3) Three spindle shafts.

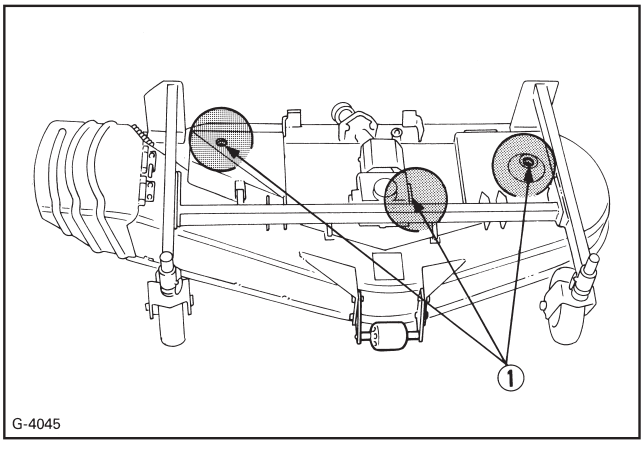

(1) Grease fitting

(4) Belt tension pivot and tension pulley.

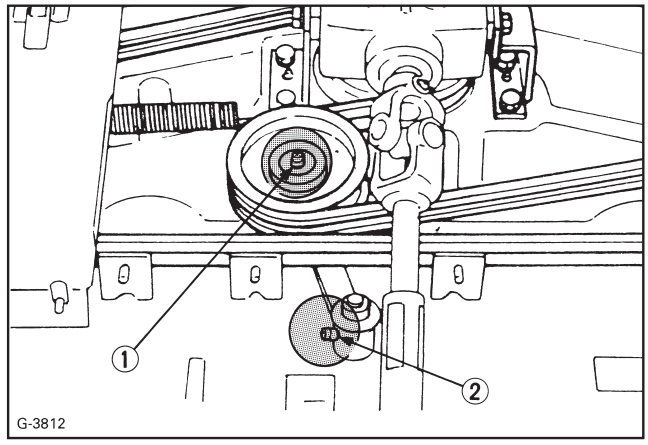

(1) Grease fitting (Belt tension pulley)
(2) Grease fitting (Belt tension pivot)

6.3 BLADE REPLACEMENT

⚠ WARNING

To avoid serious injury or death:

- **Be sure to stop the engine and remove the key.**
- **Blades may be sharp. When you handle blades, wear heavy gloves or wrap end of blade with a rag.**

IMPORTANT:

- The bolt (blade) has R.H. threads. Turn it counterclockwise to loosen.
- To prolong the service life of the blade, reposition its sections as shown in the figure below.
- Before checking or replacing the blade, wipe grass and mud off the top and inside of the mower. Especially clean up the inside of the belt cover, because otherwise the belt life will be reduced.

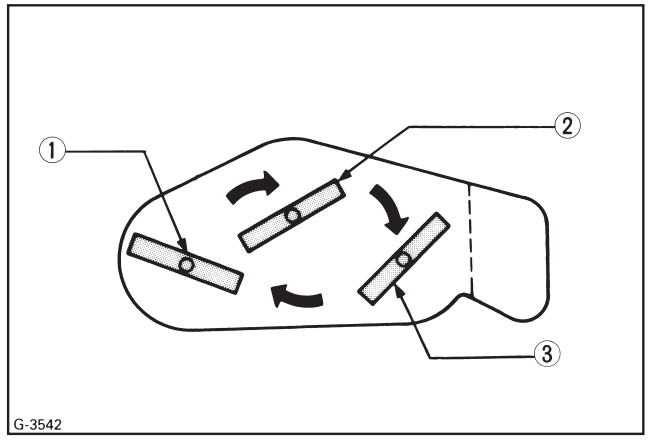

(1) LH blade
(2) Center blade
(3) RH blade

The blade cutting edges should be kept sharp at all times. Sharpen the cutting edges, if they resemble the blade in figure (B). Replace the blades if they appear similar to the blade as shown in figure (C).

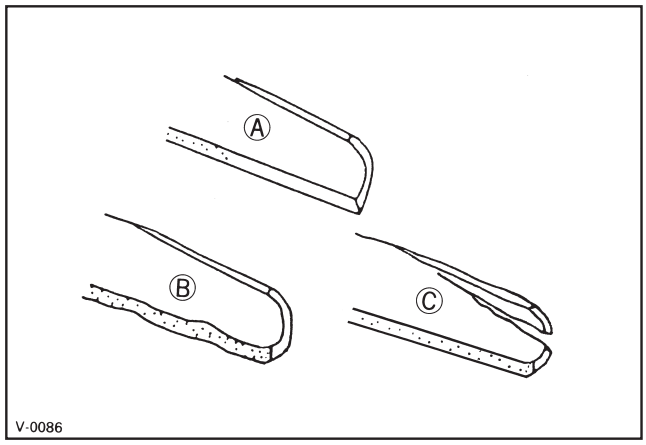

(A) "NEW BLADE"
(B) "WORN BLADE"
(C) "CRACKED BLADE"

(1) Remove the mower from the vehicle and turn it over to expose the blades.
(2) Wedge a block of wood between the blade and mower housing or install box wrench over pulley nut to prevent spindle from rotating while removing blade bolts, then loosen the blade bolt as illustrated.

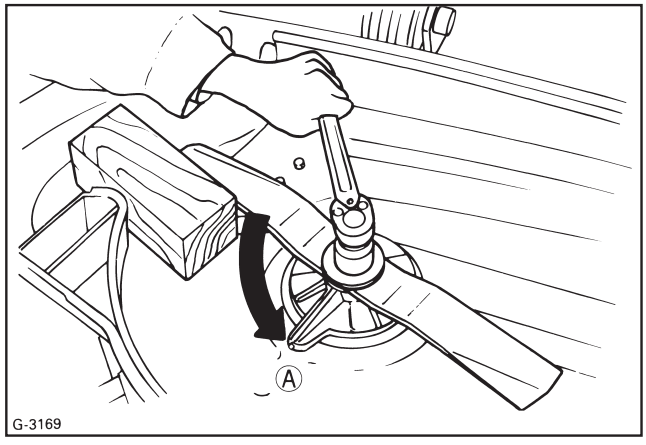

(A) "Loosen"

WARNING

To avoid serious injury or death:
- **Wear heavy gloves when removing blades.**

NOTE:
- Use the proper metric size box or socket wrench to tighten or loosen the blade mounting bolt.

(3) To sharpen the blades, clamp the blade securely in a vise.
Use a large mill file and file along the original bevel until sharp.

(4) To check the blade for balance, place a small rod through the center hole. The blade should balance on this rod. If the blade is not balanced, file the heavy side of the blade until balance is achieved.
(5) Attach the blade as illustrated. (RC48-F19)

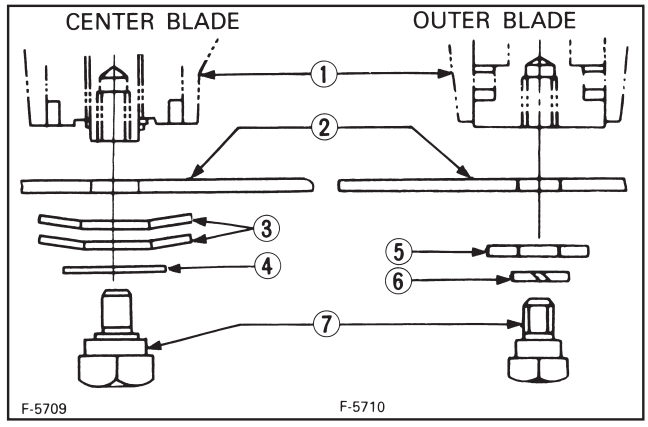

(1) Spindle holder
(2) Blade
(3) 2-Cup washers
(4) Friction washer
(5) Plain washer
(6) Spring washer
(7) Bolt

NOTE:
- Make sure the cup washer is not flattened out or worn, causing blade to slip easily. Replace both cup washers and friction washer if either is damaged.
  (RC54-F19, RC60-F19)
  Pass the spline boss through the blade and 2 cup washers, and tighten the bolt.

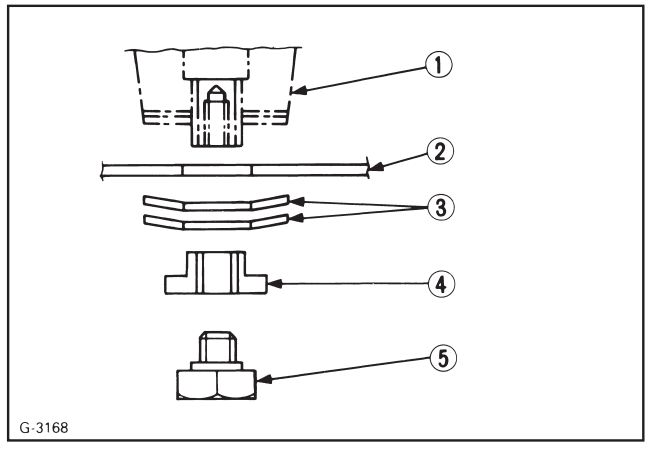

(1) Spindle holder
(2) Blade
(3) 2-Cup washers
(4) Spline boss
(5) Bolt

IMPORTANT:
- Tightening torque of the blade bolts.

	RC48-F19	RC54-F19, RC60-F19
Center blade	10 to 12 kgf-m (72 to 87 ft-lbs)	10 to 12 kgf-m (72 to 87 ft-lbs)
Outer blade	12.6 to 15 kgf-m (91 to 109 ft-lbs)	

6.4 BELT REPLACEMENT

(1) Remove the mower from the tractor.
(2) Remove the left and right hand shields from the mower deck.
(3) Clean around the gear box.
(4) Remove the right hand bracket which mounts the gear box to the mower deck.
(5) Remove the belt from the tension pulley. Slip the belt over the top of the gear box.
(6) To install a new belt, reverse the above procedure.

NOTE:
- Tighten bracket bolts securely.

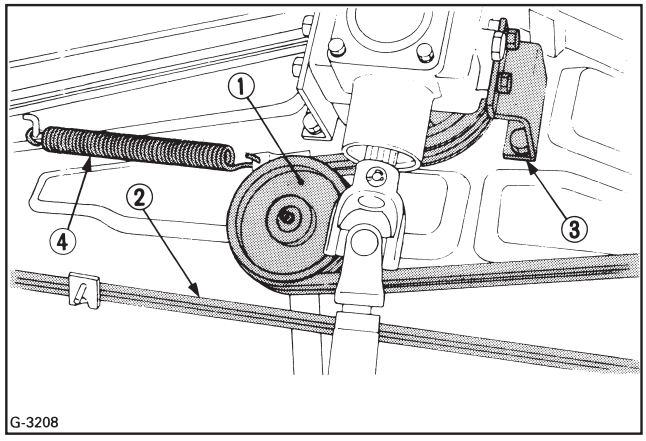

(1) Tension pulley *(3) Bracket (RH)*
(2) Belt *(4) Tension spring*

IMPORTANT:
To avoid the misalignment of the center spindle.
- Before attaching the bolt, attach the right hand bracket securely.

6.5 ADJUSTING THE LIFT RODS

WARNING
To avoid serious injury or death:
- **Shut off the engine, set the parking brake, and remove the key.**

(1) Park the front mower and mower deck on level ground and set the desired cutting height.
(2) Check whether the mower deck is level.
(3) If not, adjust the length of the lift rod so that the deck is leveled.
(4) Tighten the lock nut securely.

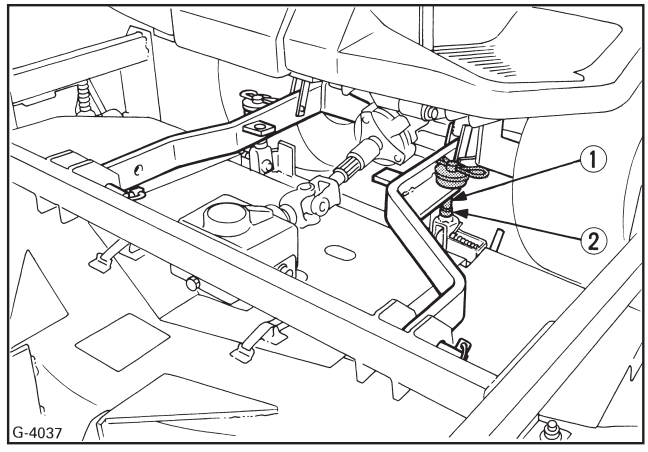

(1) Lift rod
(2) Lock nut

6.6 FRONT GAUGE WHEEL

[TIRES]

WARNING
To avoid serious injury or death:
- **Never exceed the tire pressure shown below (maximum limit) when attempting to seat a bead. If beads have not been seated by the time the pressure reaches maximum limit, deflate the assembly, reposition the tire on the rim, relubricate, and reinflate. After seating the bead, adjust inflation pressure as recommended in the inflation pressure chart.**

Max inflation pressure: 3.8 x 10^5 Pa (55 psi, 3.8 kgf/cm^2)

WARNING
To avoid serious injury or death:
- **Do not attempt to mount a tire unless qualified. Use proper equipment.**

The tire pressure is factory-set to the correct level, however, tire pressure will drop slowly in the course of time. Check tire pressure daily and inflate as necessary.

6.7 ADJUSTING THE LIFT SPRINGS (2WD)

In order to help improve traction, adjust the lift springs according to the chart below.

	RC48-F19	RC54-F19	RC60-F19
RH	A= —	A=15 mm (0.6 in.)	A=33 mm (1.3 in.)
LH	A=10 mm (0.4 in.)	A=10 mm (0.4 in.)	A=10 mm (0.4 in.)

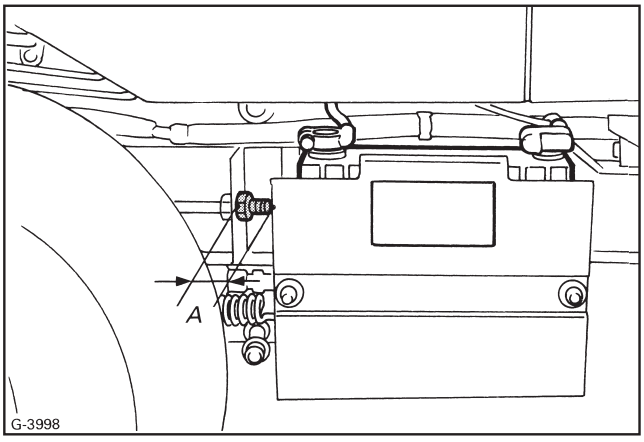

6.8 TIGHTENING TORQUE CHART

Thread Size d (mm)	Hexa-Bolt Head size B (mm)	No mark			7T		
		ft-lbs	N-m	kgf-m	ft-lbs	N-m	kgf-m
M8	12 or 13	**13.0 to 15.2** (14.1 ± 1.1)	**17.8 to 20.6** (19.2±1.4)	**1.9 to 2.1** (2.0±0.1)	**17.5 to 20.3** (18.9±1.4)	**23.5 to 27.5** (25.5±2.0)	**2.4 to 2.8** (2.6±0.2)
M10	14 or 17	**28.9 to 33.3** (31.1±2.2)	**39.3 to 45.1** (42.2±2.9)	**4.0 to 4.6** (4.3±0.3)	**35.4 to 41.2** (38.3±2.9)	**48.1 to 55.9** (52.0±3.9)	**4.9 to 5.7** (5.3±0.4)
M12	17 or 19	**46.3 to 53.5** (49.9±3.6)	**62.8 to 72.6** (67.7±4.9)	**6.4 to 7.4** (6.9±0.5)	**57.1 to 66.5** (61.8±4.7)	**77.6 to 90.2** (83.9±6.3)	**8.0 to 9.2** (8.6±0.6)
M14	19 or 22	**79.6 to 92.6** (86.1±6.5)	**107.9 to 125.5** (116.7±8.8)	**11.0 to 12.8** (11.9±0.9)	**91.1 to 108.5** (99.8±8.7)	**123.6 to 147.0** (135.3±11.7)	**12.6 to 15.0** (13.8±1.2)

NOTE:

- Figure "7" on the top of the bolt indicates that the bolt is of special material.
- Before tightening, check the figure on the top of bolt.

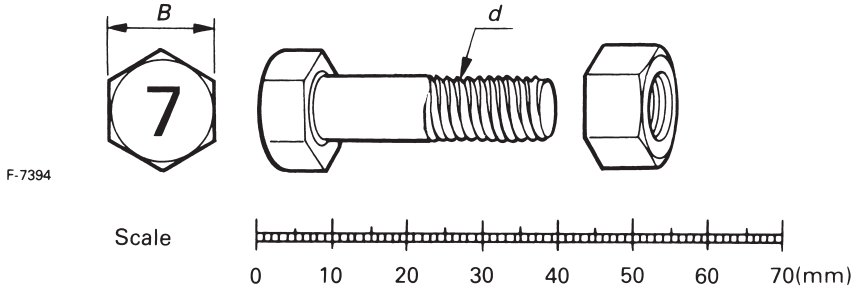

7. TROUBLESHOOTING

Any service item refer to operator's manual for proper maintenance procedure.

Trouble	Cause	Remedy
Discharge chute plugged.	● Grass too wet. ● Grass too long. ● Cutting too low. ● Engine r.p.m. too low. ● Ground speed too fast.	● Wait for grass to dry. ● Raise cutting height and cut grass twice. ● Raise cutting height. ● Mow at full throttle. ● Slow down.
Streaking of grass uncut.	● Ground speed too fast. ● Engine r.p.m. too low. ● Grass too long. ● Blades dull or damaged. ● Debris in mower deck.	● Slow down. ● Mow at full throttle, check and reset engine r.p.m.. ● Cut grass twice. ● Replace blades or have blades sharpened. ● Clean mower deck.
Uneven cut.	● Mower deck not level. ● Ground speed too fast. ● Blades dull. ● Blades worn. ● Low tire inflation. ● Gauge wheels not adjusted correctly. ● Gauge wheels pressure not adjusted correctly.	● Level mower deck. ● Slow down. ● Have blades sharpened. ● Replace blades. ● Add air to correct. ● Adjust gauge wheels. ● Set both tire pressures to the correct pressure.
Blades scalping grass.	● Cutting height too low. ● Turning speed too fast. ● Ridges in terrain. ● Rough or uneven terrain. ● Gauge wheels not adjusted correctly. ● Bent blade(s).	● Raise cutting height. ● Reduce speed on turns. ● Change mowing pattern. ● Adjust gauge wheels and antiscalp rollers. ● Adjust gauge wheels and antiscalp rollers. ● Replace blade(s).
Belt slipping.	● Mower deck plugged. ● Debris in pulleys. ● Worn belt.	● Unplug and clean mower deck. ● Clean pulleys. ● Replace belt.
Excessive vibration.	● Debris on mower deck or in pulleys. ● Damaged drive belt. ● Damaged pulleys. ● Pulleys out of alignment. ● Blades out of balance.	● Clean mower deck and pulleys. ● Replace drive belt. ● Replace pulleys. ● See your KUBOTA dealer. ● Have blades balanced.
Mower loads down tractor.	● Engine r.p.m. too low. ● Ground speed too fast. ● Debris wrapped around mower spindles. ● Front of deck lower than rear.	● Mow at full throttle, check and reset engine r.p.m.. ● Slow down. ● Clean mower. ● Adjust deck per 6.5.