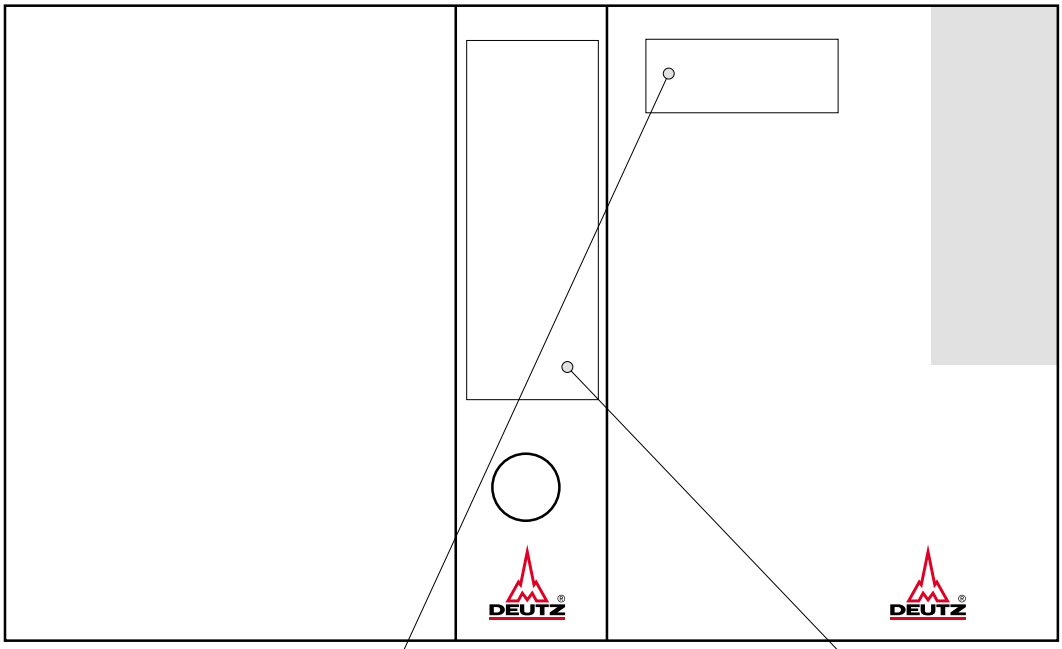

Workshop Manual
D 2008/2009

0312 3422
en

Workshop Manual
D 2008/2009

Note for printers
Color: white
Paper: Ikonofix 250 g/m^2

Workshop Manual

D 2008/2009

0312 3422 en

This document is subject to changes which may become necessary in the course of further development of the engines. Reprinting and reproductions of any kind, even in part, require our written permission.

DEUTZ AG
Service Information Systems
Ottostraße 1
51149 Köln
Deutschland
Tel.: +49 (0) 221-822-0
Fax: +49 (0) 221-822-5850
Web: http://www.deutz.com

Printed in Germany
All rights reserved
1st Edition, 02/2006
Order No. 0312 3422 en

DEUTZ® The engine company.

1 Foreword

2 General

3 User notes
- 3.1 General
- 3.2 Specifications
- 3.2.1 Safety regulations and rules for the prevention of accidents
- 3.2.2 Disposal regulations
- 3.3 Operating manual and workshop manual
- 3.4 Job cards
- 3.5 Explanation of symbols

4 Technical data
- 4.1 Testing and setting data
- 4.2 Tightening specifications

5 Job card overview
- 5.1 Sorted numerically

6 Job cards

7 Commercial tools

8 Special tools

1 Foreword

- Read and observe the information in this documentation. You will avoid accidents, retain the manufacturer's warranty and possess a fully functional and ready to operate engine.
- This engine is built exclusively for purpose according to the scope of delivery - defined by the equipment manufacturer (use for the intended purpose). Any use above and beyond this is considered improper use. The manufacturer will not be liable for damages resulting from this. The user bears the sole risk.
- Use for the intended purpose also includes observance of the operating, maintenance and repair instructions specified by the manufacturer. The engine may only be used, maintained and repaired by persons who are familiar with this and are aware of the risks involved.
- Make sure that this documentation is available to everyone involved in the operation, maintenance and repair and that they have understood the contents.
- Failure to observe this documentation may lead to malfunctions and engine damage as well as injury to persons for which the manufacturer will not accept any liability.
- Prerequisite for proper maintenance and repair is the availability of all the necessary equipment, conventional and special tools and their perfect condition.
- Engine parts such as springs, clamps, elastic retaining rings etc. pose an increased risk of injury when handled incorrectly.
- The pertinent rules for the prevention of accidents and other generally recognised health and safety regulations must be observed.
- Maximum economy, reliability and long life is only guaranteed when using DEUTZ original parts.
- Repair of the engine must correspond to its use for the intended purpose. Only parts released by the manufacturer for the respective purpose may be used for conversion work. Unauthorised modifications to the engine exclude manufacturer liability for resulting damages. Failure to observe this will void the warranty!
- The engines made by DEUTZ are developed for a wide range of applications. A wide range of variants ensures that the respective special requirements are met.
- The engine is equipped according to the installation case, i.e. not all the parts and components described in this documentation are installed in your engine necessarily.
- We have done our best to highlight the differences so that you can easily find the operating, maintenance and repair instructions relevant to your engine.

We are at your service for any questions you may have in this matter.

Your DEUTZ AG

2 General

DEUTZ engines are the product of years of research and development. The profound expertise gained through this, in combination with high demands on quality, attests to the fact that our engines possess all the qualities of long life, high reliability and low fuel consumption. It goes without saying that the high environmental protection requirements are also met.

Maintenance and care are the only way the engine can satisfy the demands you make on it. Compliance with the prescribed maintenance times and the careful execution of maintenance and care work are therefore essential. Difficult operating conditions, deviating from normal operation, must be particularly heeded.

Please consult one of our service representatives responsible for operating faults and spare parts questions. Our trained specialist personnel ensures fast and professional repairs using original DEUTZ spare parts in the event of damage.
Original spare parts from DEUTZ AG are always manufactured according to the state of the art.

3 User notes

3.1 General

The documentation of the workshop manual has been created based on the engine available at the time of going to press.
There may be deviations in the descriptions, illustrations and parts due to further developments.

The maintenance work described in the operation manual and in the workshop manual must be carried out on schedule and completely. The maintenance personnel must have the necessary technical knowledge to perform the work. Safety and protection devices which are removed during maintenance work must be replaced again afterwards.

Caution!

The rules for the prevention of accidents and the safety regulations must be observed during maintenance work.

Reference is made in the workshop manual job cards to the regulations in chapter 3.2. These must be read before working on the engine and must be strictly followed.

The maintenance intervals and the work to be performed are specified in the maintenance schedule of the operation manual. The job cards contain technical documentation on the execution of maintenance work.

3.2 Specifications

3.2.1 Accident prevention and safety regulations

The legally prescribed rules for the prevention of accidents must be observed. These are available from professional associations or from dealers. These are dependent on the application site, operating mode and the operating and auxiliary materials being used.

Special protection measures are specified depending on the work being carried out, and are identified in the job description.

Among other things it generally applies that:

- for the personnel:
  - Only briefed personnel may operate or maintain the engine. Unauthorised persons are prohibited access to the machine room.
  - Wear close-fitting clothing and ear protectors in the machine room when the engine is in operation.
  - Only deploy trained personnel to do repairs and maintenance work.
  - Do not work on the fuel system when the engine is running. The fuel system is under high pressure - danger of death.
  - Go to the workshop immediately in case of leaks in the fuel system.
- for the engine room:
  - Ensure adequate ventilation (do not cover air shafts).
  - Provide first aid kit and suitable fire extinguishers. Check the filling and readiness for operation regularly.
  - Only store inflammable materials in the machine room if they are essential for operation of the system.
  - Smoking and naked flames are prohibited in the machine room.
- for operation, maintenance and repairs on the engine:
  - After all work on the fuel system, it must be bleeded - see the operation manual, chapter "6.2 Fuel system“.
  - Only start the engine when all the protective devices have been fitted. Make sure no-one is standing in the danger area.
  - Cleaning, maintenance and repair work may only be performed with the engine at a standstill and secured against starting.
  - Injection lines and high pressure pipes must not be deformed.
  - Damaged injection lines and high-pressure pipes must be renewed.

- Injection lines and high pressure fuel lines must never be connected when the engine is running.
- Do not place hands near to a leak in the high pressure fuel system.
- Also carefully check all high pressure components visually before performing tests on the running engine. Wear suitable protective clothing (for example protective glasses). Leaks are a potential source of danger for workshop personnel.
- Even if no leaks are discernible on the high pressure fuel system, the workshop personnel should avoid the immediate danger zone or wear suitable protective clothing (such as protective glasses) when performing tests on the running engine and during the first trial run.
- Always stay out of range of a fuel jet, as it could cause severe injury.
- Smoking is strictly prohibited when working on the fuel system.
- Do not work near to sparks and flames.

3.2.2 Disposal regulations

The work described in the operation manual and workshop manual necessitates renewal of parts and operating materials among other things. The renewed parts / operating materials must be stored, transported and disposed of according to regulations. The owner himself is responsible for this.

Disposal includes recycling and the scrapping of parts / operating materials, although recycling has priority.

Details of disposal and their monitoring are governed by regional, national and international laws and directives which the system operator must observe on his own responsibility.

3.3 Operation manual and workshop manual

To structure the information to suit the user, the service documentation is divided into operation manual and workshop manual.

The operation manual contains a general description and instructions for all other maintenance work.

It contains the following chapters:

1. Contents, General
2. Engine description
3. Operation
4. Operating media
5. Maintenance
6. Care and maintenance work
7. Faults, causes and remedies
8. Engine conservation
9. Technical data
10. Service

The workshop manual assumes knowledge of the contents of the operation manual. This applies especially for the safety regulations. The workshop manual describes repairs to the engine and components for which more effort and appropriately qualified technicians are required.

3.4 Job cards

The job cards are divided in the workshop manual into "W" and "I" job cards.
The "W" job card documents standard repairs on the engine and/or its components. The necessary tools and special tools are also specified in the "W" job card.
The "I" job card additionally documents the appropriate work procedures for repairing the engine and/or its components. The workshop must satisfy special conditions to perform these work procedures. Special tools and machine tools must be available, for example.

3.4.1 Numbering of job cards

The job card numbers follow the pattern **W 02-04-01**. The individual parts of this pattern are explained below:

- **W** 02-04-01: Documentation type
  - **W**Workshop manual
  - I..... Repair instructions
- W **02**-04-01: Maintenance group
  - 00... General / interdisciplinary activities
  - 01... Cylinder head
  - **02**... Drive system
  - 03... Crankcase
  - 04... Engine control system
  - 05... Speed governing
  - 06... Exhaust system / Charging
  - 07... Fuel system
  - 08... Lube oil system
  - 09... Cooling system
  - 10... Compressed air system
  - 11... Monitoring system
  - 12... Other components
  - 13... Electrical system
- W 02-**04**-01: Component grouping
- W 02-04-**01**: Consecutive number

3.4.2 Structure of a job card

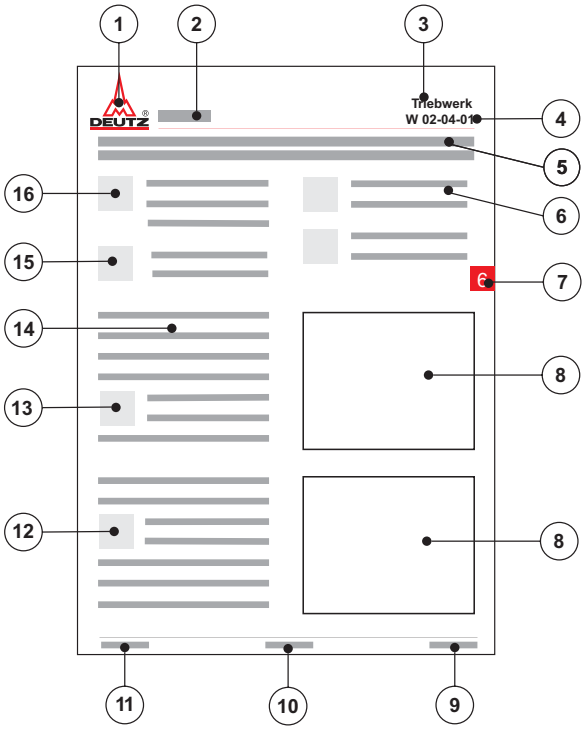

1. DEUTZ AG,
   publisher of service documentation
2. Engine type (e.g. TCD 2013 4V)
3. Maintenance group
4. Job card number or topic
5. Title of job card
6. Reference to other job cards
7. Chapter
8. Graphic or photo
9. DEUTZ internal creation number
10. Page number
11. Date of issue of job card
12. Note
13. Danger / Important
14. Work sequence
15. Special tools; auxiliary materials
16. Conventional tools

3.5 Explanation of symbols

Danger!
of death or to health. Must be observed!
For example: The incorrect use or conversion of the turbocharger can lead to serious injury.

Caution!
Danger to the component/engine. Non-compliance can lead to destruction of the component/engine.
Must be observed!

Note
General notes on assembly, environmental protection etc. No potential danger for man or machine.

Tool
Conventional and special tools required for the work.

Auxiliary materials
Working materials required in addition to the tools for performing the work
(e.g. greases, oils, adhesives, sealants)

References
to important documents or job cards for the work process.
For example: Job card W 04-05-05

Reference
to a document or a job card within the work process.

Test and setting data
The necessary values are specified here.
If several values are necessary, a cross reference is given to the Test and Setting Values table.
For example:
ID no. P01 61 = valve clearance, inlet

Tightening specification
The necessary values are specified here.
If several values are necessary, a cross reference is given to the Tightening Specifications table.
For example:
ID no. A01 001 = cylinder head screws

4 Technical data

4.1 Testing and setting data

ID no.	Name	Information	Series			Value	Unit
General engine data							
P00 01	Length of engine		D 2008	L3		538	mm
				L4		627	mm
P00 02	Width of engine		D 2008			480	mm
P00 03	Height of engine		D 2008			620	mm
P00 04	Engine weight according to DIN 70020-A approx.		D 2008	L3		155	kg
				L4		189	kg
P00 10	Working procedure		D 2008			four-stroke diesel	-
P00 20	Combustion system		D 2008			naturally aspirated engine with indirect injection	-
P00 30	Total volume		D 2008	L3		1170	cm^3
				L4		1560	cm^3
P00 31	Bore		D 2008			76	mm
P00 32	Stroke		D 2008			86	mm
P00 40	Compression ratio		D 2008			23,5 : 1	-
P00 50	Direction of rotation	looking onto the flywheel	D 2008			left	-
P00 60	Max. declared speed		D 2008			3000	[rpm]
P00 61	Min. idling speed		D 2008			900	[rpm]
P00 71	Ignition sequence		D 2008	L3		1-2-3	-
				L4		1-3-4-2	-
Power train							
P02 34	Permissible axial backlash of crankshaft		D 2008			0,13 - 0,56	mm
P02 71	Piston, diameter, standard		D 2008			74^{+1}_{-0}	mm

© 02/2006

ID no.	Name	Information	Series			Value	Unit
P02 75	Piston projection		D 2008			0,65 - 0,9	mm
P02 78	Piston pin bore		D 2008			$25^{+0,008}_{+0,003}$	mm
P02 79	Piston height		D 2008			66,15	mm
P02 95	Position of the piston ring joints		D 2008			120 (offset to each other)	°
Control system							
P04 35	Camshaft, axial backlash	Nominal	D 2008			0,07 - 0,29	mm
Fuel system							
P07 31	Start of pumping (static)	Part number: 0411 4267, at 1,500 rpm (fixed speed)	D 2008	L3		110	°
P07 31	Start of pumping (static)	Part number: 0411 4267, at 1,800 rpm (fixed speed)	D 2008	L3		110	°
P07 31	Start of pumping (static)	Part number: 0411 4267, at 3,000 rpm (variable speed)	D 2008	L3		not available	°
P07 31	Start of pumping (static)	Part number: 0411 4276, at 1500 rpm (fixed speed)	D 2008	L4		110	°
P07 31	Start of pumping (static)	Part number: 0411 4276, at 1,800 rpm (fixed speed)	D 2008	L4		110,5	°
P07 31	Start of pumping (static)	Part number: 0411 4276, at 300 rpm (variable speed)	D 2008	L4		not available	°
P07 52	Nozzle opening pressure fuel injector		D 2008			150 - 158	bar
Cooling system							
P09 11	Coolant thermostat start of opening		D 2008			86 - 90	°C
P09 13	Coolant thermostat, stroke distance		D 2008			at least 8	mm
Other components							
P12 11	Tension of the V-belt	First assembly	D 2008			450	N

ID no.	Name	Information	Series			Value	Unit
P12 21	Tension of the V-belt	Check after 15 minutes running under load	D 2008			300^{+20}_{-20}	N

ID no.	Name	Information	Series			Value	Unit
General engine data							
P00 01	Length of engine		D 2009	L3		597	mm
				L4		680	mm
P00 01	Length of engine		TD 2009	L4		696	mm
P00 02	Width of engine		D 2009	L3		490	mm
			TD 2009	L4		518	mm
P00 03	Height of engine		D 2009	L3		612	mm
			D 2009	L4		612	mm
			TD 2009	L4		633	mm
P00 04	Engine weight according to DIN 70020-A approx.		D 2009	L3		180	kg
				L4		205	kg
P00 10	Working procedure		D/TD 2009			four-stroke diesel	-
P00 20	Combustion system		D/TD 2009			Direct injection	-
P00 30	Total volume		D 2009	L3		1718	cm^3
			D/TD 2009	L4		2289	cm^3
P00 31	Bore		D/TD 2009			90	mm
P00 32	Stroke		D/TD 2009			90	mm
P00 40	Compression ratio		D 2009			19,6 : 1	-
			TD 2009			18 : 1	-
P00 50	Direction of rotation	looking onto the flywheel	D/TD 2009			left	-
P00 71	Ignition sequence		D 2009	L3		1-2-3	-
			D/TD 2009	L4		1-3-4-2	-
P00 60	Max. declared speed		D/TD 2009			3000	[rpm]

ID no.	Name	Information	Series			Value	Unit
P00 61	Min. idling speed		D/TD 2009			900	[rpm]
Power train							
P02 34	Permissible axial backlash of crankshaft		D/TD 2009			0,13 - 0,56	mm
P02 71	Piston, diameter, standard		D/TD 2009			$88^{+0,5}_{-0,5}$	mm
P02 75	Piston projection		D/TD 2009			0,70 - 1,0	mm
P02 78	Piston pin bore		D/TD 2009			$28^{+0,008}_{+0,030}$	mm
P02 79	Piston height		D/TD 2009			71,65	mm
P02 95	Position of the piston ring joints		D/TD 2009			120 (offset to each other)	°
Control system							
P04 35	Camshaft, axial backlash	Nominal	D/TD 2009			0,07 - 0,29	mm
Fuel system							
P07 31	Start of pumping (static)	Part number: 0411 2478, at 1500 rpm (fixed speed)	D 2009	L3		90	°
P07 31	Start of pumping (static)	Part number: 0411 2476, at 1,800 rpm (fixed speed)	D 2009	L3		90	°
P07 31	Start of pumping (static)	Part number: 0411 4099, at 3,000 rpm (variable speed)	D 2009	L3		89	°
P07 31	Start of pumping (static)	Part number: 0411 4088, at 1,500 rpm (fixed speed)	D 2009	L4		105	°
P07 31	Start of pumping (static)	Part number: 0411 4085, at 1,800 rpm (fixed speed)	D 2009	L4		105	°
P07 31	Start of pumping (static)	Part number: 0411 4421, at 3000 rpm (fixed speed)	D 2009	L4		100	°
P07 31	Start of pumping (static)	Part number: 0411 2192, at 3,000 rpm (variable speed)	D 2009	L4		102,5	°

© 02/2006

ID no.	Name	Information	Series			Value	Unit
P07 31	Start of pumping (static)	Part number: 0411 4102, at 1500 rpm (fixed speed)	TD 2009	L4		103,5	°
P07 31	Start of pumping (static)	Part number: 0411 4104, at 1,800 rpm (fixed speed)	TD 2009	L4		not available	°
P07 31	Start of pumping (static)	Part number: 0411 4074, at 3,000 rpm (variable speed)	TD 2009	L4		102,5	°
P07 52	Nozzle opening pressure fuel injector		D/TD 2009			250 - 258	bar
Cooling system							
P09 11	Coolant thermostat start of opening		D/TD 2009			86 - 90	°C
P09 13	Coolant thermostat stroke distance		D/TD 2009			at least 8	mm
Other components							
P12 11	Tension of the V-belt	First assembly	D/TD 2009			450	N
P12 21	Tension of the V-belt	Check after 15 minutes running under load	D/TD 2009			300^{+20}_{-20}	N

4.2 Tightening specifications

ID no.	Name	Screw type	Notes / Remarks	Series			Pre-clamping value	Post-clamping value
A00 003	Engine mounting on crankcase	M10 x 1.5		D/TD 2008/ 2009			41 Nm	
A01 001	Cylinder head on crankcase	M12 x 1.75	Use new screws	D/TD 2008/ 2009			35 Nm	35 Nm 60° 60°
A01 002	Rocker arm bracket on cylinder head	M8 x 1.25		D/TD 2008/ 2009			27 Nm	
A01 004	Cylinder head cover on cylinder head	M8 x 1.25		D/TD 2008/ 2009			27 Nm	
A01 092	Lifting log on cylinder head	M8 x 1.25		D/TD 2008/ 2009			41 Nm	
A02 010	Main bearing housing on crankcase	M8 x 1.25		D/TD 2008/ 2009			15 Nm	27 Nm
A02 012	Main bearing housing on crankcase	M10 x 1.5	Locking screw	D/TD 2008/ 2009			41 Nm	
A02 013	Main bearing housing (assembly)	M8 x 1.25	Hexagon socket	D/TD 2008/ 2009			21 Nm	
A02 020	Big end bearing cap on connecting rod	M8 x 1.0		D/TD 2008/ 2009			35 Nm	
A03 020	Gear case cover on crankcase	M8 x 1.25		D/TD 2008/ 2009			27 Nm	
A03 030	Lubricating oil pan on crankcase	M8 x 1.25		D/TD 2008/ 2009			32 Nm	
A03 031	Drain plug on lubricating oil pan	M14 x 1.5		D/TD 2008/ 2009			39 Nm	
A03 080	Connection housing to crankcase	M14 x 1.5		D/TD 2008/ 2009			81 Nm	

© 02/2006

ID no.	Name	Screw type	Notes / Remarks	Series			Pre-clamping value	Post-clamping value
A04 001	Cam shaft toothed gear on camshaft	M12 x 1.75		D/TD 2008/ 2009			81 Nm	
A04 004	Fuel injector toothed gear on fuel injector pump	M14 x 1.5		D/TD 2008/ 2009			10 Nm	81 Nm
A04 005	Thrust washer camshaft on crankcase	M8 x 1.25	Torx screw	D/TD 2008/ 2009			21 Nm	
A04 011	Idler gear on crankcase	M12 x 1.75		D/TD 2008/ 2009			81 Nm	
A06 001	Exhaust manifold on cylinder head	M8 x 1.25		D/TD 2008/ 2009			27 Nm	
A06 030	Intake manifold on cylinder head			D/TD 2008/ 2009			27 Nm	
A07 001	Clamping shoe fuel injector on cylinder head	M8 x 1.25		D/TD 2008/ 2009			27 Nm	
A07 003	Union nuts for high pressure pipes	M12 x 1.5		D/TD 2008/ 2009			28 Nm	
A07 006	Pipe clamp for high pressure pipes	M6 x 1.0		D/TD 2008/ 2009			9 Nm	
A07 013	Blocking screw on fuel injector pump			D/TD 2008/ 2009			10 Nm	
A07 019	Fule line on fuel supply pump			D/TD 2008/ 2009			15 Nm	
A07 024	Fuel supply pump on crankcase	M8 x 1.25		D/TD 2008/ 2009			27 Nm	
A07 031	Fuel injector pump on crankcase	M8 x 1.25		D/TD 2008/ 2009			21 Nm	
A07 084	Fuel lines on fuel filter console	M10 x 1.5		D/TD 2008/ 2009			21 Nm	

ID no.	Name	Screw type	Notes / Remarks	Series			Pre-clamping value	Post-clamping value
A07 087	Fuel filter console on crankcase	M10 x 1.5		D/TD 2008/ 2009			41 Nm	
A08 003	Oil filter console on crankcase	3/4"	Hollow screw	D/TD 2008/ 2009			41 Nm	
A08 010	Lubricating oil pump on crankcase	M6 x 1.0		D/TD 2008/ 2009			4 Nm	9 Nm
A08 016	Oil suction pipe holder on crankcase	M10 x 1.5		D/TD 2008/ 2009			41 Nm	
A08 098	Oil pressure regulating valve on crankcase	3/8"		D/TD 2008/ 2009			27 Nm	
A09 005	Outlet nozzle on cylinder head	M8 x 1.25		D/TD 2008/ 2009			27 Nm	
A09 010	Coolant pump on gearcase cover	M8 x 1.25		D/TD 2008/ 2009			27 Nm	
A12 001	Flywheel on crankcase	M12 x 1.5		D/TD 2008/ 2009			96 Nm	
A12 031	V-belt pulley on crankcase	M20 x 1.5		D/TD 2008/ 2009			300 Nm	
A12 046	V-belt pulley and fan impeller on coolant pump	M6 x 1.0		D/TD 2008/ 2009			9 Nm	
A13 001	Starter on connection housing	M10 x 1.5		D/TD 2008/ 2009			41 Nm	
A13 012	Generator on gearcase cover	M8 x 1.25		D/TD 2008/ 2009			22 Nm	
A13 013	Generator on bracket	M8 x 1.25		D/TD 2008/ 2009			21 Nm	
A13 018	Bracket (generator) on gearcase cover and bracket	M8 x 1.25		D/TD 2008/ 2009			21 Nm	

ID no.	Name	Screw type	Notes / Remarks	Series			Pre-clamping value	Post-clamping value
A13 032	Heating plug on cylinder head	M10 x 1.0		D/TD 2008/ 2009			15 Nm	
A13 033	Connecting rail on heating plug	M4 x 0.7		D/TD 2008/ 2009			2.5 Nm	
A13 071	Cable (cl. 30) on starter			D/TD 2008/ 2009			9 Nm	

5 Job card overview

5.1 Sorted numerically

Job card	Activity	Maintenance group
W 01-02-02	Removing and installing the rocker arm	Cylinder head
W 01-04-04	Removing and installing the cylinder head	Cylinder head
W 01-04-09	Measuring the piston projection	Cylinder head
W 01-05-01	Removing and installing the valves	Cylinder head
W 02-01-04	Checking the axial clearance of the crankshaft	Drive system
W 02.02.02	Renewing the crankshaft sealing ring (flywheel side)	Drive system
W 02-02-04	Renewing the crankshaft sealing ring (opposite side to flywheel)	Drive system
W 02-04-01	Removing and installing the crankshaft	Drive system
W 02-09-03	Removing and installing the piston and con rod	Drive system
W 02-09-07	Checking the piston	Drive system
W 03-09-04	Removing and installing the connection housing	Crankcase
W 04-04-09	Removing and installing the gearcase cover	Crankcase
W 04-05-05	Removing and installing the camshaft	Engine control
W 06-01-05	Removing and installing the exhaust manifold	Exhaust system / Charging
W 06-07-03	Removing and installing the air intake manifold	Exhaust system / Charging
W 07-04-01	Removing and installing the fuel injector pump	Fuel system
W 07-07-01	Removing and installing the fuel injectors	Fuel system
W 07-10-08	Removing and and installing the fuel filter console	Fuel system
W 07-11-01	Removing and installing the fuel supply pump	Fuel system
W 08-04-05	Removing and installing the lubricating oil pump	Lube oil system
W 08-04-06	Removing and installing the oil suction pipe	Lube oil system
W 08-04-07	Removing and installing the lubricating oil pan	Lube oil system
W 08-11-10	Removing and installing the oil pressure regulating valve	Lube oil system
W 09-07-08	Removing and installing the coolant pump	Cooling system
W 09-08-01	Checking the coolant thermostat when uninstalled	Cooling system
W 09-08-02	Removing and installing the coolant thermostat	Cooling system
W 12-02-02	Removing and installing the V-belt, V-belt pulley	Other components
W 12-06-01	Removing and installing the flywheel	Other components
W 13-02-03	Removing and installing the generator	Electrical system
W 13-03-02	Removing and installing the starter	Electrical system
W 13-06-01	Removing and installing the heating plugs	Electrical system

6 Job cards

Removing and installing the rocker arm

Commercial available tools

Removing the rocker arm

- Loosen hose clip (1).
- Unscrew screws (2).
- Remove cylinder head cover (3).
- Remove gasket (4).

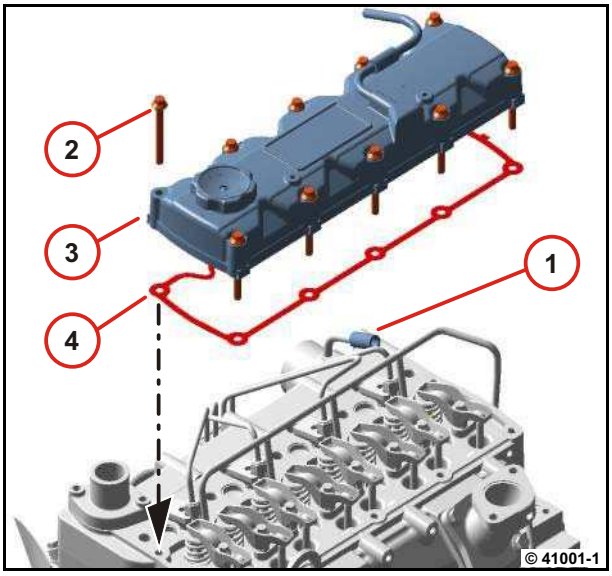

- Unscrew screw (1).
- Remove rocker arm bearing (2).
- Remove rocker arm (3).

Lay out components in the order in which they should be installed.

- Visually inspect the components.

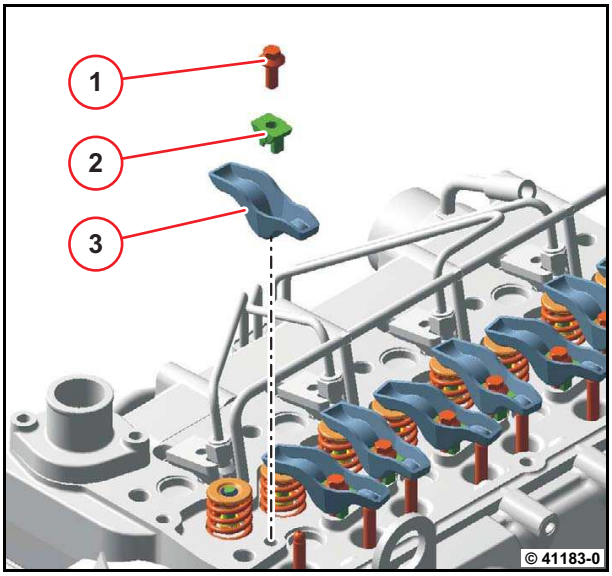

Installing the rocker arm

- Grease the rocker arm (arrow) lightly.
- Mount rocker arm (3) and rocker arm bearing (2).

Align rocker arm centred to the valve spring!

- Fasten screw (1).

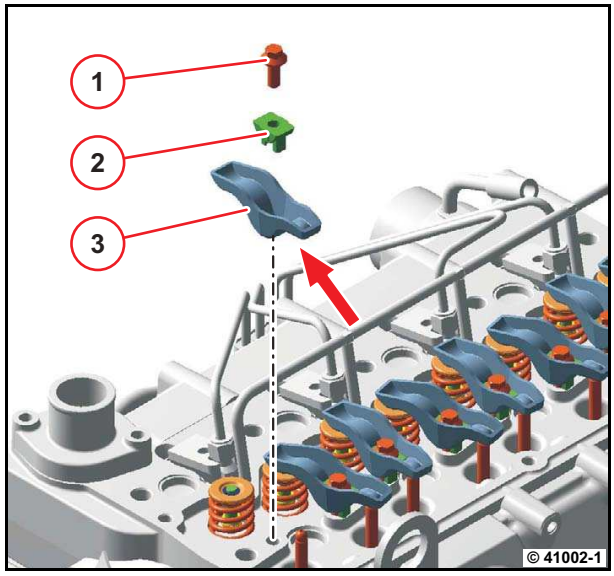

- Press down rocker arm (1) and pushrod.
- Tighten screw (2).

27 Nm

Oil rocker arm lightly!

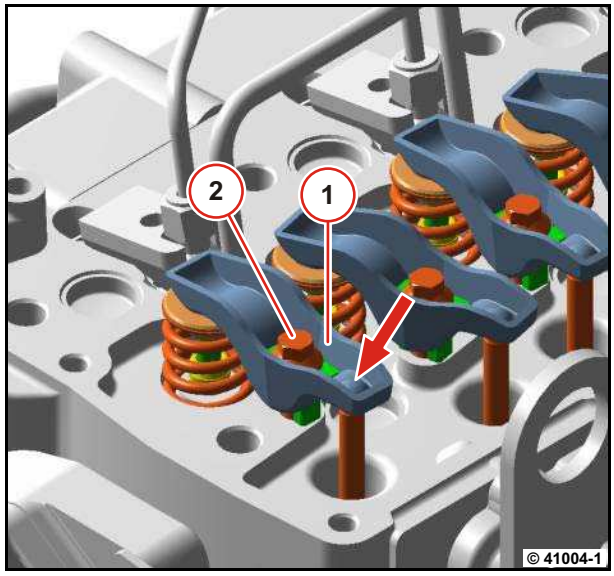

- Clean sealing surfaces.

The sealing surfaces must be dry and free from grease and dirt.

- Mount new gasket (4).
- Mount cylinder head cover (3).
- Fit on the venting hose (1).
- Tighten screws (2).

27 Nm

Tightening sequence: From the centre outwards.

- Tighten hose clip (1).

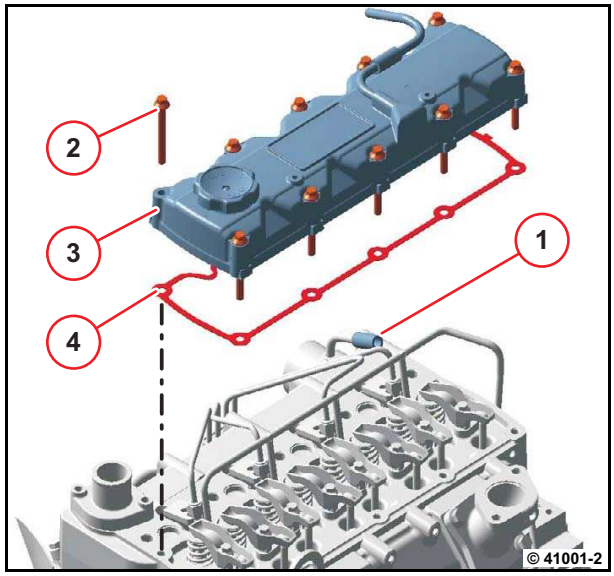

Removing and installing cylinder head

Commercial available tools

– W 01-02-02
– W 01-04-09
– W 06-01-05
– W 06-07-03

Removing the cylinder head

1. Valve
2. Rocker arm
3. Cylinder head bolts
4. Pushrods
5. Thermostat housing
6. Fuel injector
7. Coolant duct

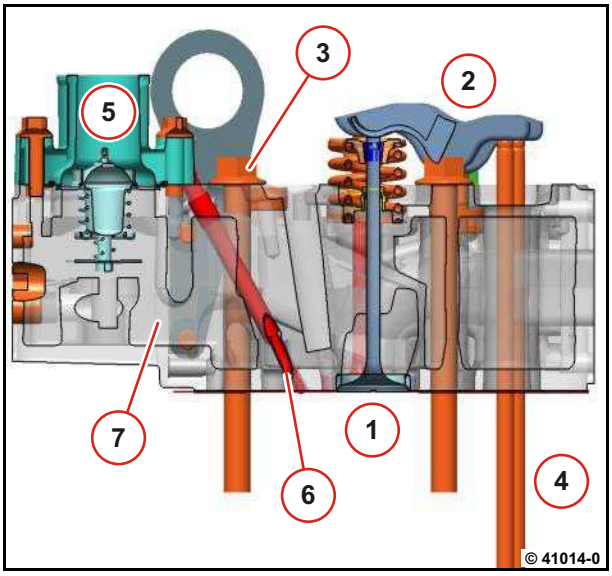

- Remove rocker arm.

  W 01-02-02

- Remove exhaust manifold.

  W 06-01-05

- Remove intake manifold.

  W 06-07-03

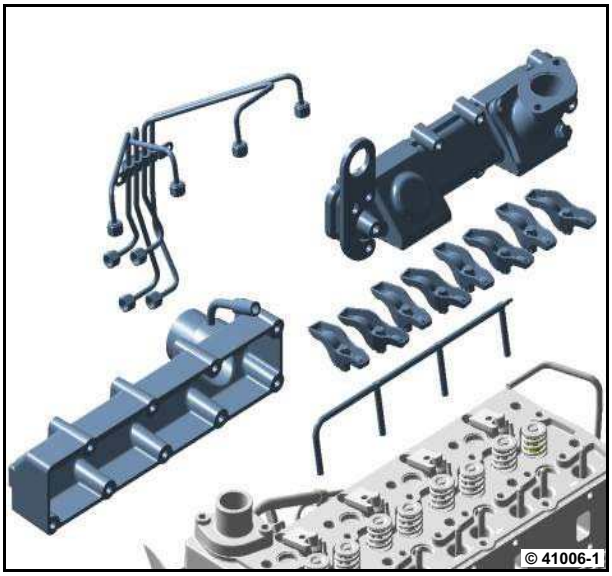

- Remove push rods (1).

Lay out components in the order in which they should be installed.

- Visually inspect the components.

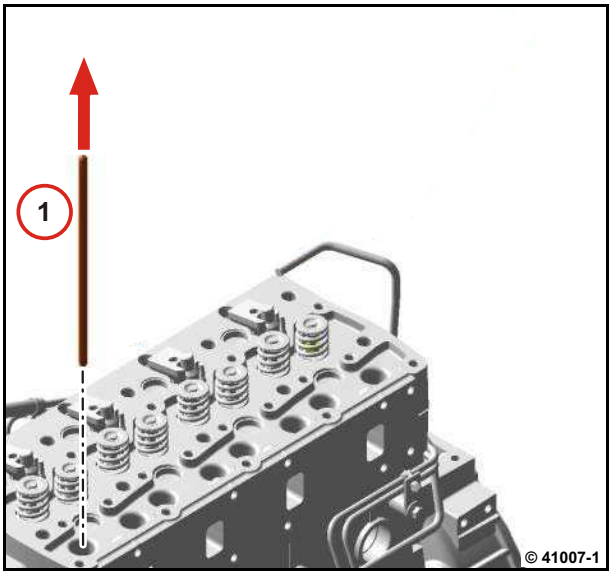

Representation: 3-cylinder engine
Loosen the screws in the specified order.

- Remove screws.

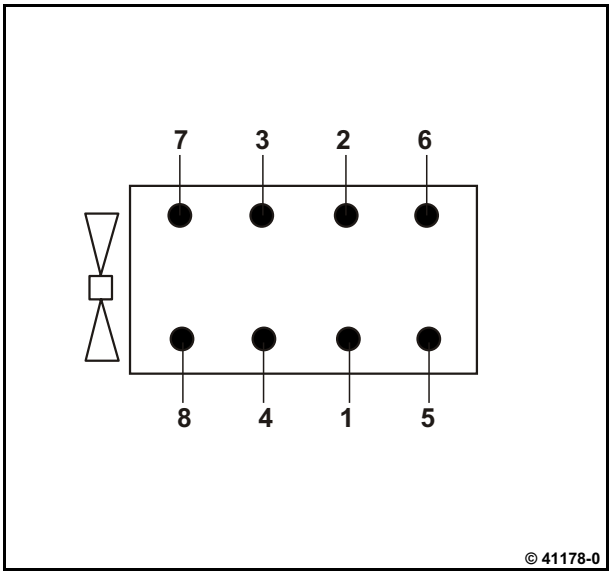

Representation: 4-cylinder engine
Loosen the screws in the specified order.

- Remove screws.

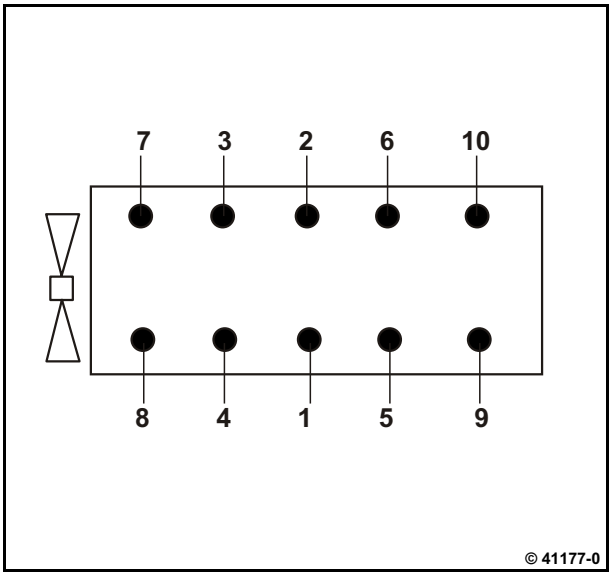

- Lift the cylinder head carefully from the crankcase.
- Remove gasket.
- Clean sealing surfaces.

Do not place cylinder head on sealing surface.

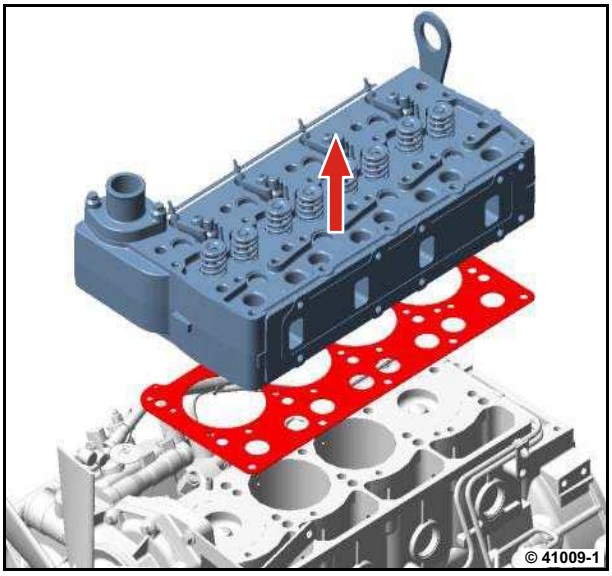

Installing the cylinder head

- Measure piston projection.

W 01-04-09

Note installation position of the hydro tappets.

Make sure the clamping bushings (1) are in place.

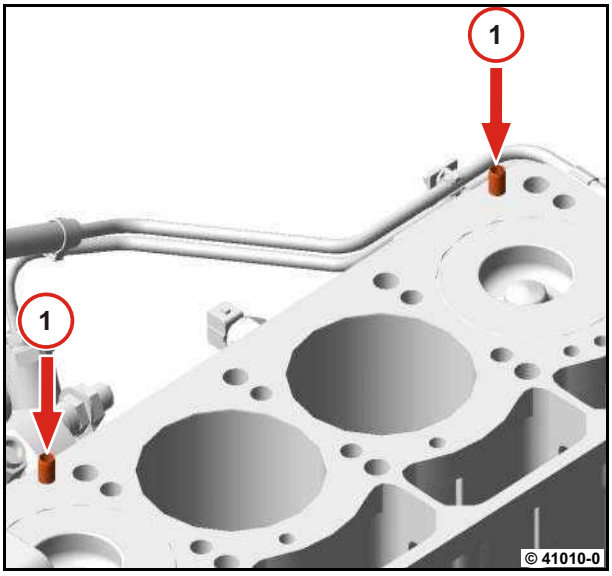

- Fit a new cylinder head gasket.

The sealing surfaces for the cylinder head gasket must be clean and free of oil.

Label OBEN / TOP facing the cylinder head.

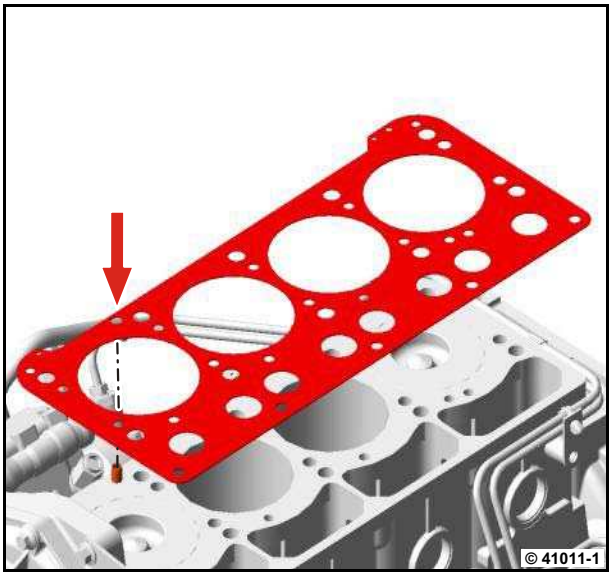

- Fit cylinder head.

Pay attention to clamping bushings (1).

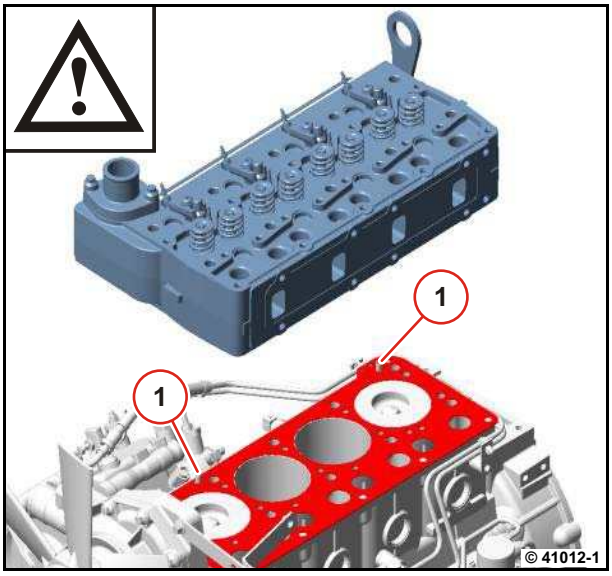

Representation: 3-cylinder engine

Attention!
Use new screws.

- Oil the cylinder head screws slightly.
- Tighten the screws according to the tightening sequence.
  - Step 1:
    35 Nm
  - Step 2:
    60°
  - Step 3:
    60°

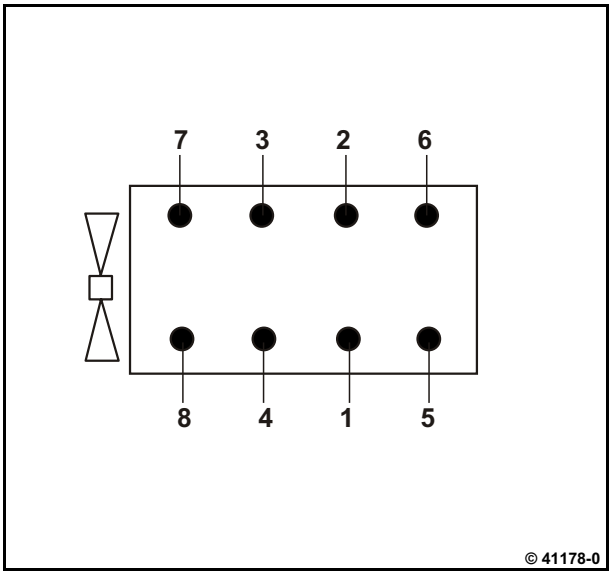

Representation: 4-cylinder engine

Attention!
Use new screws.

- Oil the cylinder head screws slightly.
- Tighten the screws according to the tightening sequence.
  - Step 1:
    35 Nm
  - Step 2:
    60°
  - Step 3:
    60°

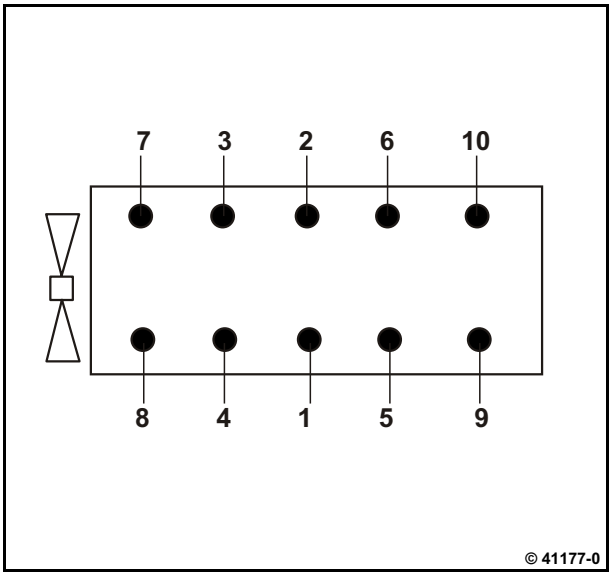

- Lightly oil pushrods.
- Insert pushrods in hydro-tappets (1).

Note installation position!

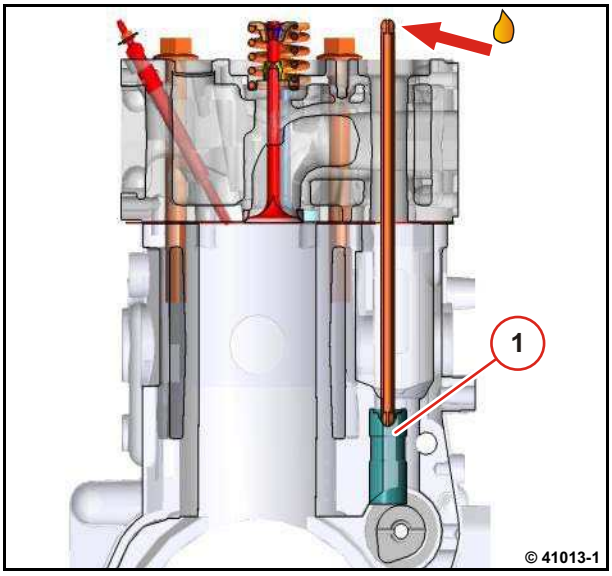

- Mount intake manifold.

  W 06-07-03
- Install exhaust manifold.

  W 06-01-05
- Install rocker arm.

  W 01-02-02

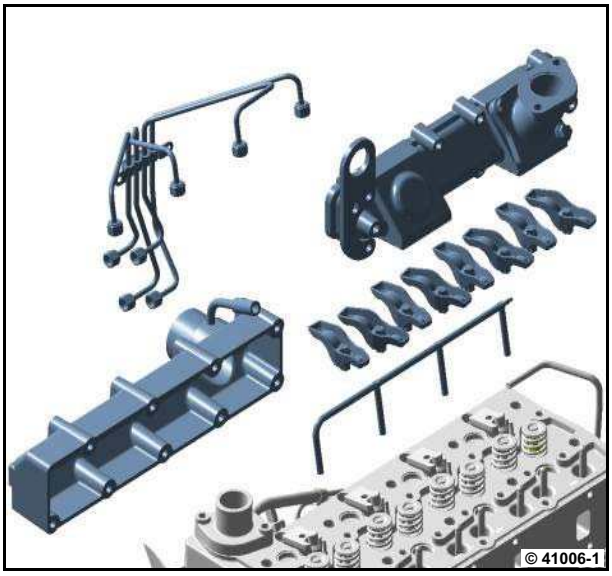

Measuring the piston projection

Commercial available tools:
– Micrometer gauge

Special tools:
– Dial gauge. 100400
– Measuring device 100750

– W 01-04-04

- Remove cylinder head.

  W 01-04-04

- Clean sealing surfaces.

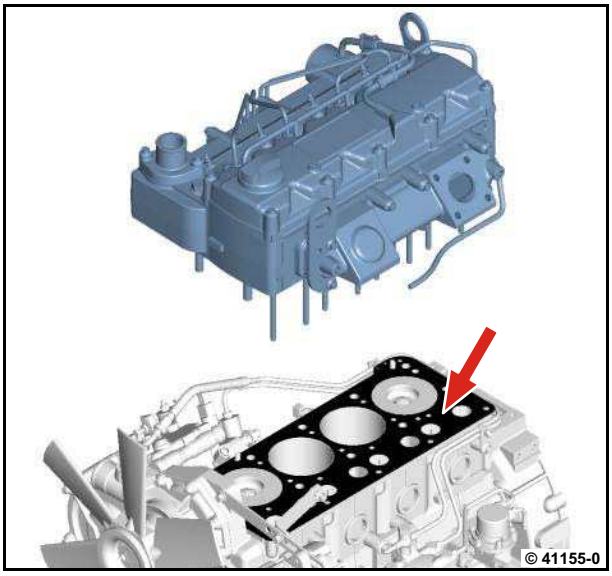

- Turn the crankshaft until the respective piston is just in front of the top dead centre (arrow).

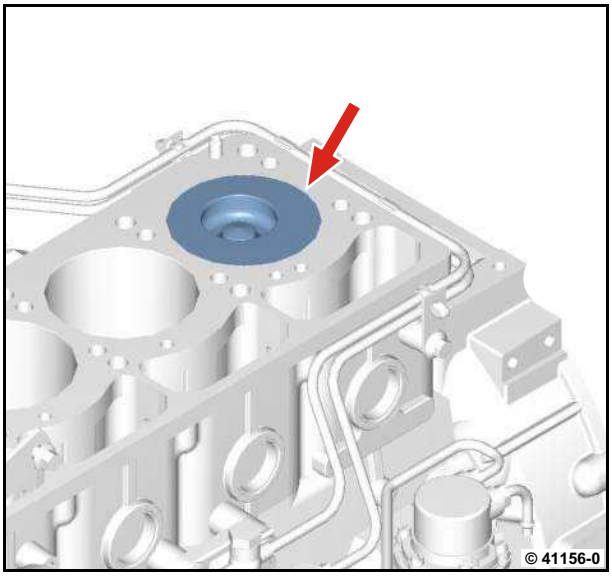

- Insert dial gauge into measuring beam.
- Place shims (1) and measuring beam (2) on the sealing surface of the crankcase.
- Apply the stylus to the piston base (arrow) under pre-tension.
- Continue turning the crankshaft evenly until the reversal point of the pointer on the dial gauge is reached.

The piston is now at top dead centre (TDC).

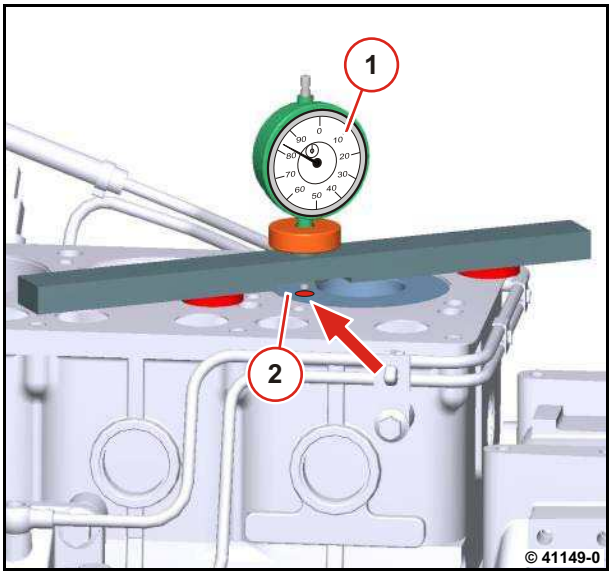

- Move the measuring beam.
- Apply stylus of the dial gauge to the crankcase sealing surface with pre-tension (arrow).
- Adjust dial gauge to "0".

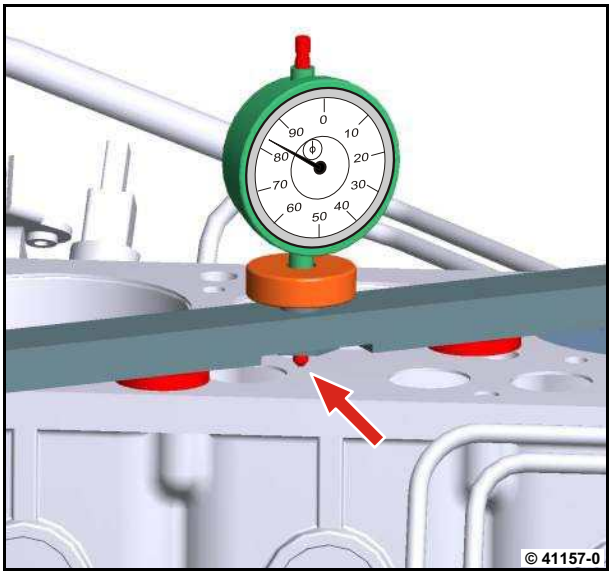

Measuring points see diagram.
Measuring points (1) and (2).

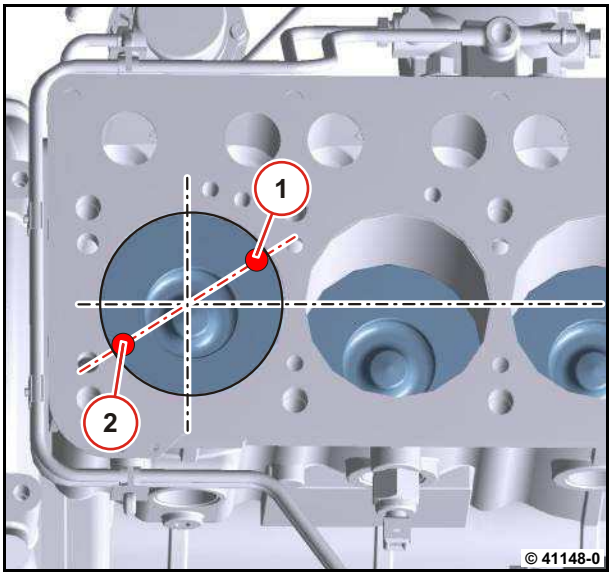

- Align the measuring apparatus on the spacing washers in such a way that the stylus lies on the specified measuring points.

Measuring points see diagram.

Do not position the stylus on the piston marking.

- Note the largest measured value.
- Compare actual value with setpoint value.

P02 75

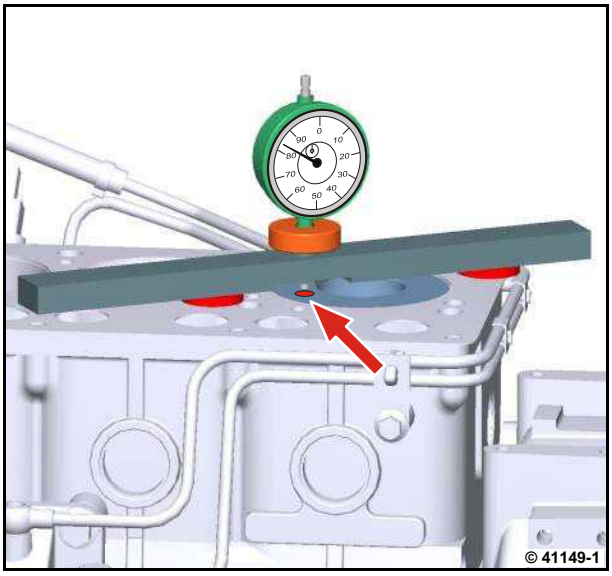

Removing and installing the valves

Commercial available tools:
– Assembly pliers. 8024
– Assembly lever 9017

Special tools:
– Assembly sleeves 121420
– Assembly tool 121430

– W 01-04-04
– W 07-07-01
– W 13-06-01

Removing the valves

1. Exhaust valve
2. Inlet valve
3. Valve spring
4. Rocker arm
5. Pushrod

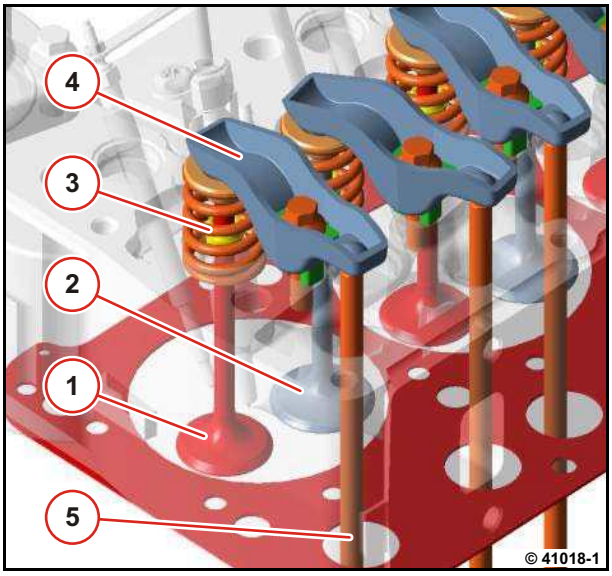

- Remove cylinder head (1).

  W 01-04-04

- Remove heating plugs (2).

  W 13-06-01

- Remove fuel injectors (3).

  W 07-07-01

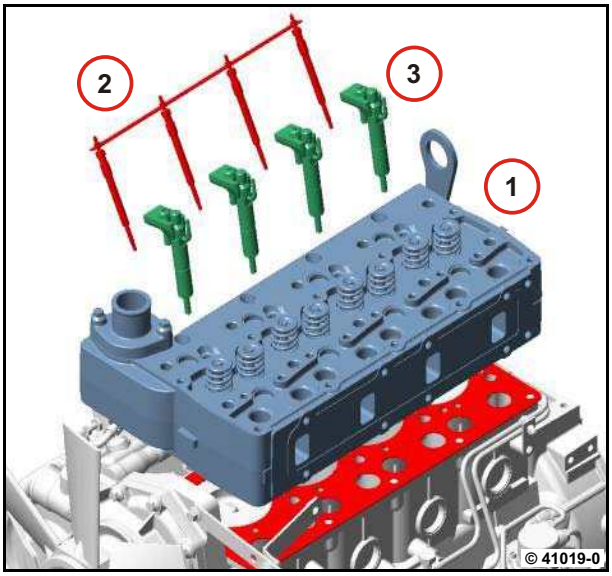

- Attach assembly lever with screw (1) to cylinder head.
- Press down valve spring with assembly lever.
- Remove both tapper collets (2).
- Remove valve spring plates, valve springs and valves.
- Remove assembly lever.

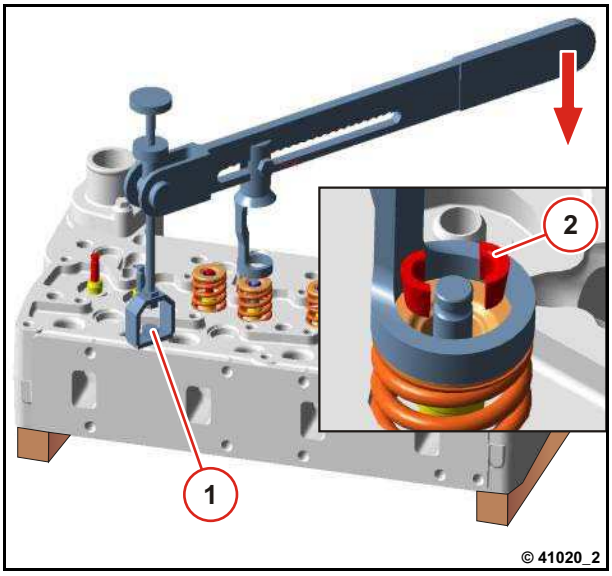

- Pull off valve stem seal (1) with assembly pliers (2).

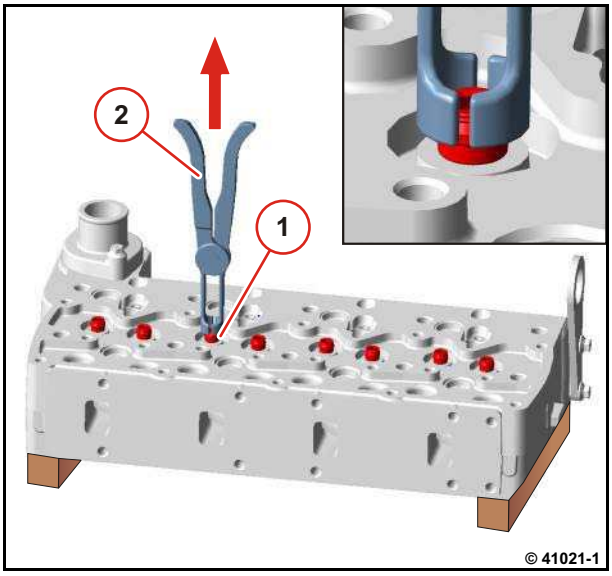

- Clean cylinder head, check and visually inspect for damage.
- Visually inspect the components.

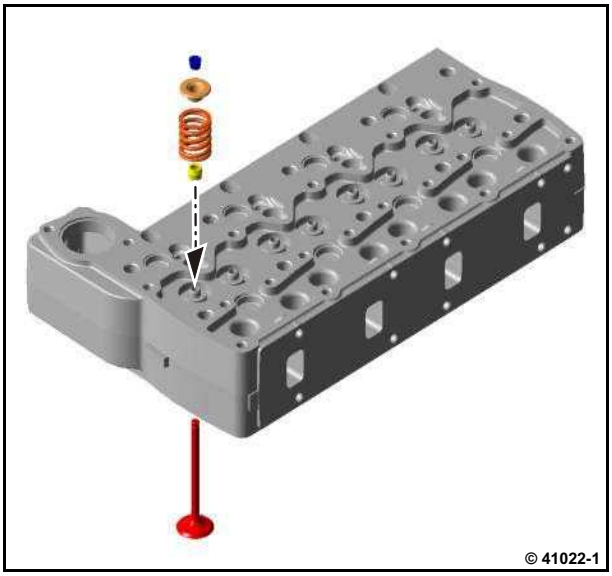

Installing the valves

- Oil the valve stem lightly.
- Insert and hold valve.
- Mount assembly sleeve.
- Push new valve stem seal onto valve guide over the assembly sleeve with assembly tool (1).

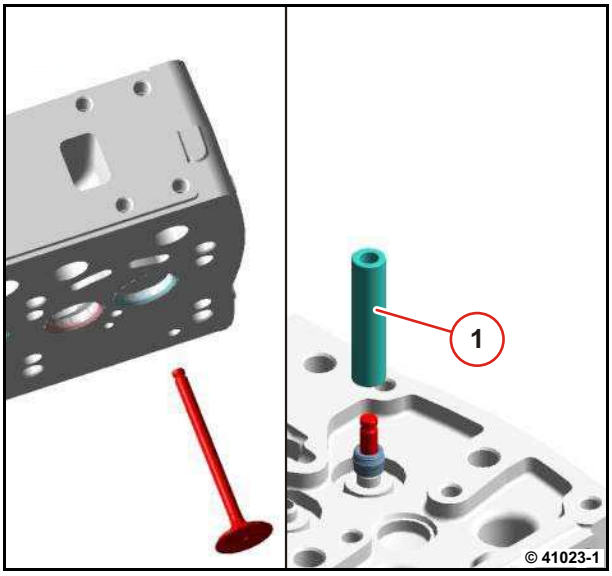

- Mount assembly lever.
- Insert valve spring.
- Insert valve spring plate (2).
- Press down the valve spring with the assembly lever and insert both tapper collets (1).

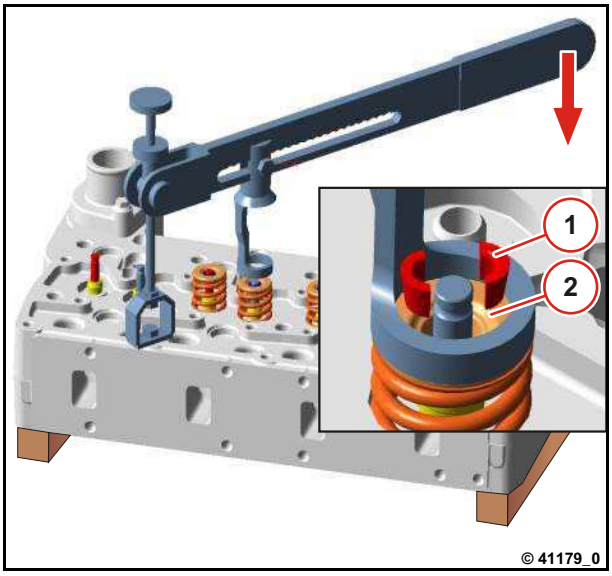

- Remove assembly lever.

Make sure the tapper collets fit correctly in the valve keyway.

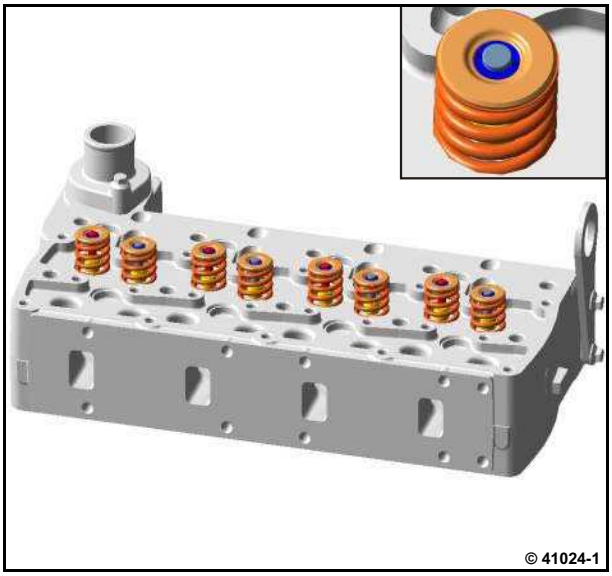

- Install cylinder head (1)
  - W 01-04-04
- Install fuel injectors (3)
  - W 07-07-01
- Install heating plugs (2)
  - W 13-06-01

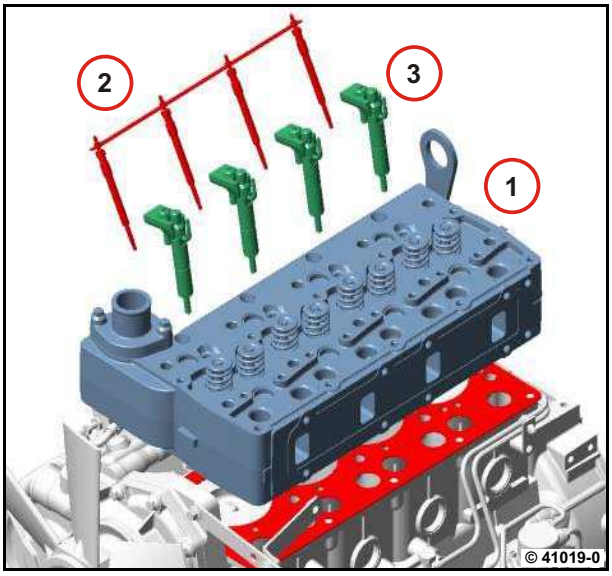

Checking the axial clearance of the crankshaft

Commercial available tools:
– Magnetic measuring stand
– Micrometer gauge

Special tools:
– Dial gauge. 100400

Checking the axial backlash

- Mount magnetic measuring stand.
- Insert dial gauge.
- Apply stylus to the crankshaft end with pre-tension.
- Press crankshaft in direction of arrow.
- Adjust dial gauge to "0".

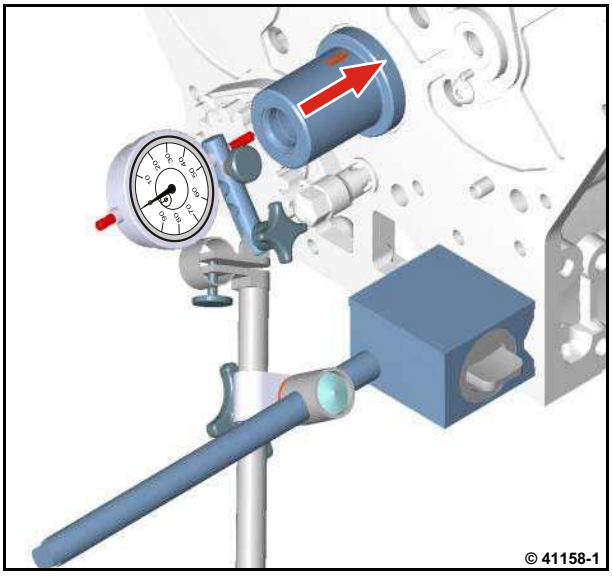

- Push crankshaft in the direction of the arrow and read off the value on the meter.

  P02 34

- Compare actual value with setpoint value.
- Remove magnetic measuring stand.
- Remove dial gauge.

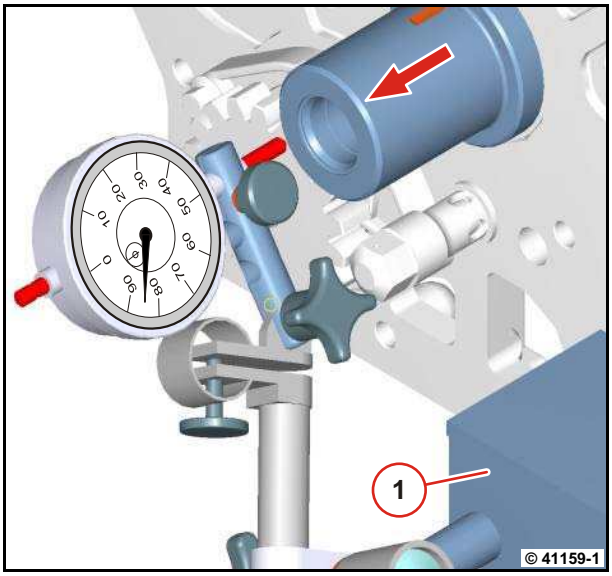

Renewing the crankshaft sealing ring (flywheel side)

Commercial available tools:
– Pricker. 8198
– Assembly lever 9017

Special tools:
– Assembly tool 142780

– Self-tapping screw
– Washer

– W 12-06-01

Removing the crankshaft sealing ring

- Remove flywheel.

  W 12-06-01

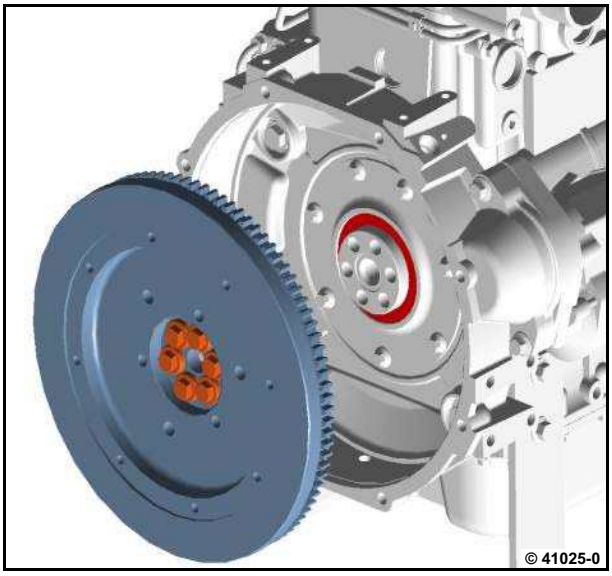

- Make a hole of approximately 3 mm in the crankshaft sealing ring with a pricker.

Attention!
Do not damage the main bearing housing and crankshaft.

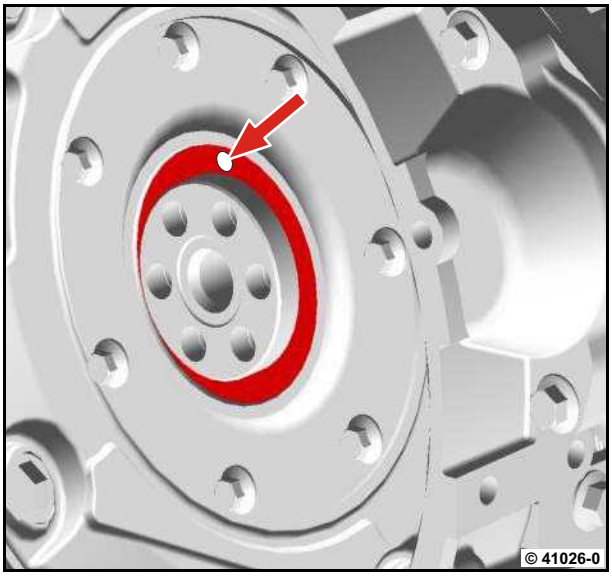

- Turn in a self-tapping screw with washer.
- Pull out the crankshaft sealing ring with assembly lever.
- Visually inspect all running surfaces.

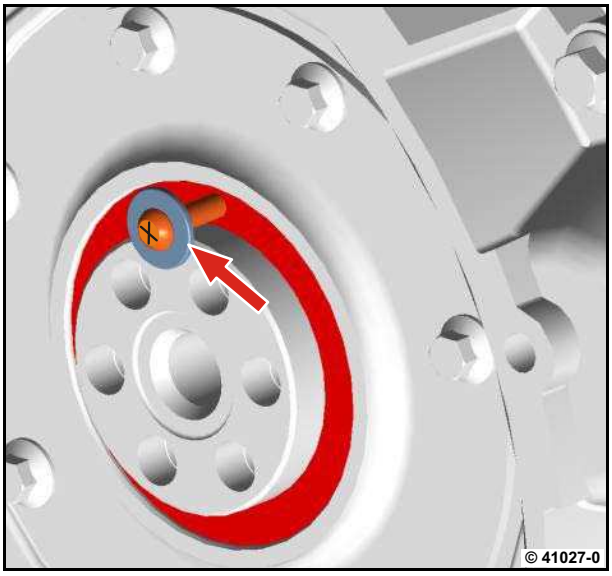

Installing the crankshaft sealing ring

Use new crankshaft sealing ring.
The sealing lip faces the crankcase.

- Oil the sealing lip of the crankshaft sealing ring lightly.
- Place the crankshaft sealing ring on the assembly tool.
- Mount the assembly tool on the crankcase pin.
- Drive in crankshaft sealing ring to the stop with the assembly tool.

1 mm installation depth between connection housing and crankshaft sealing ring.

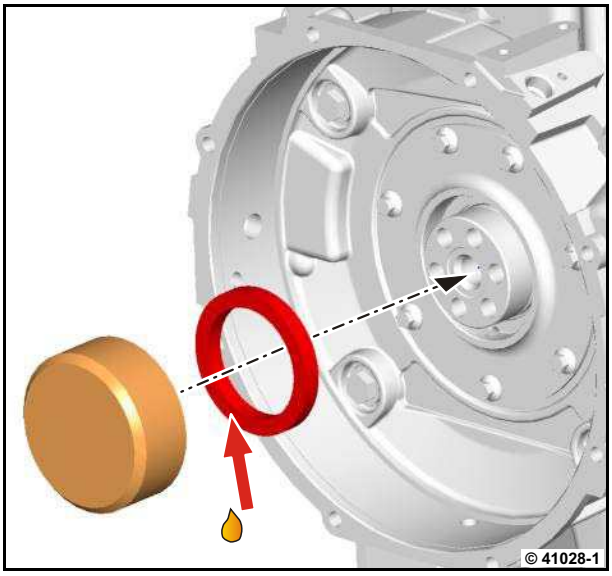

- Remove assembly tool.
- Install flywheel.

W 12-06-01

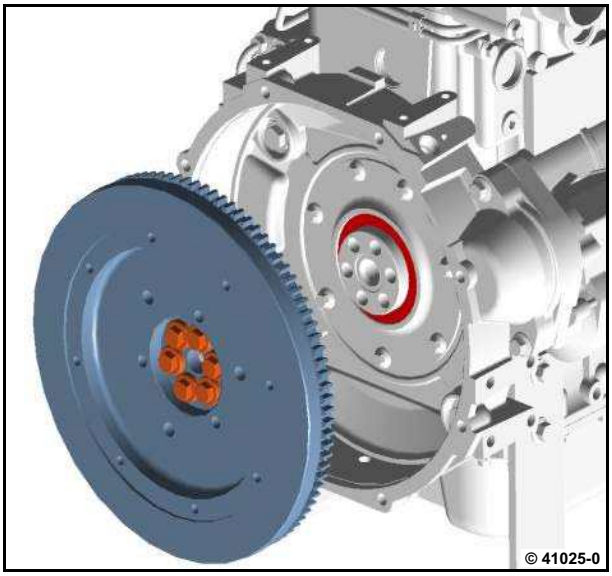

Renewing the crankshaft sealing ring (opposite side to flywheel)

Commercial available tools:
– Pricker. 8198
– Assembly lever 9017

Special tools:
– Assembly tool 142790

– Self-tapping screw
– Washer

– W 12-02-02

Removing the crankshaft sealing ring

- Remove V-belt pulley.

  W 12-02-02

- Make a hole of approximately 3 mm in the crankshaft sealing ring with a pricker.

Attention!
Do not damage the gearcase cover and crankshaft.

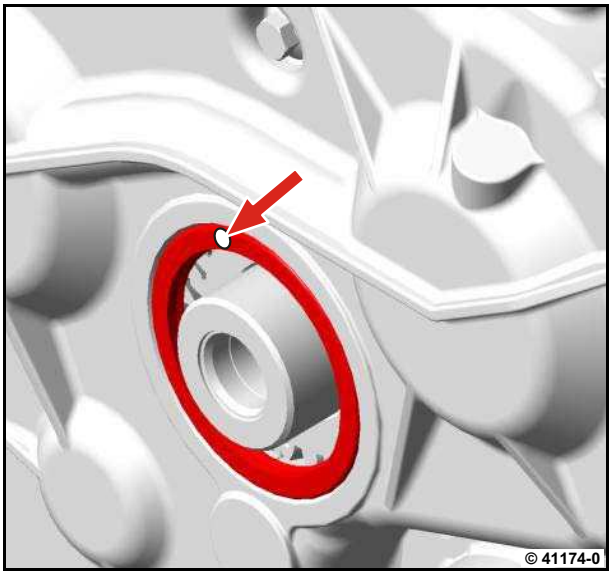

- Turn in a self-tapping screw with washer.
- Pull out the crankshaft sealing ring with assembly lever.
- Visually inspect all running surfaces.

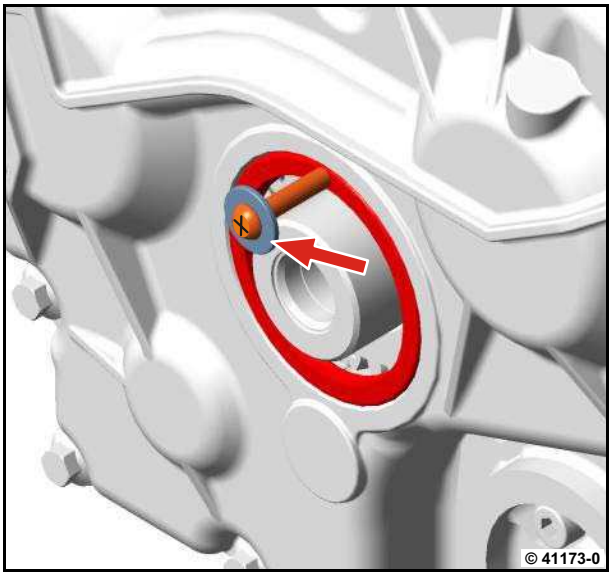

Installing the crankshaft sealing ring

Use new crankshaft sealing ring.
The sealing lip faces the crankcase.

- Oil the sealing lip of the crankshaft sealing ring lightly.
- Place the crankshaft sealing ring on the assembly tool.
- Mount the assembly tool on the crankcase pin.
- Drive in crankshaft sealing ring to the stop with the assembly tool.

The installation depth is determined by the assembly tool.

- Remove assembly tool.
- Install V-belt pulley.

W 12-02-02

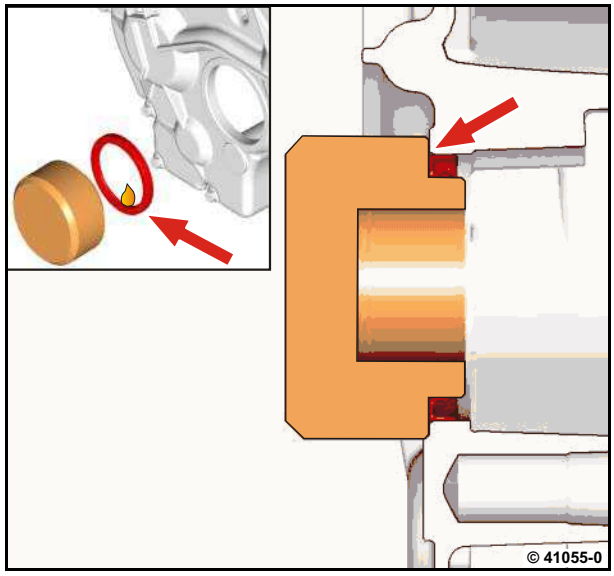

Removing and installing the crankshaft

Commercial available tools:
– Assembly lever
– 3-arm puller

Special tools:
– Dial gauge. 100400
– Assembly tool 143860
– Assembly tool 143870
– Threaded rod 143880

– W 02-01-04
– W 02.02.02
– W 02-09-03
– W 04-04-09
– W 08-11-10
– W08-04-06
– W 12-06-01

Removing crankshaft

1. Crankshaft
2. Connecting rod
3. Piston
4. Bearing housing
5. Main bearing housing

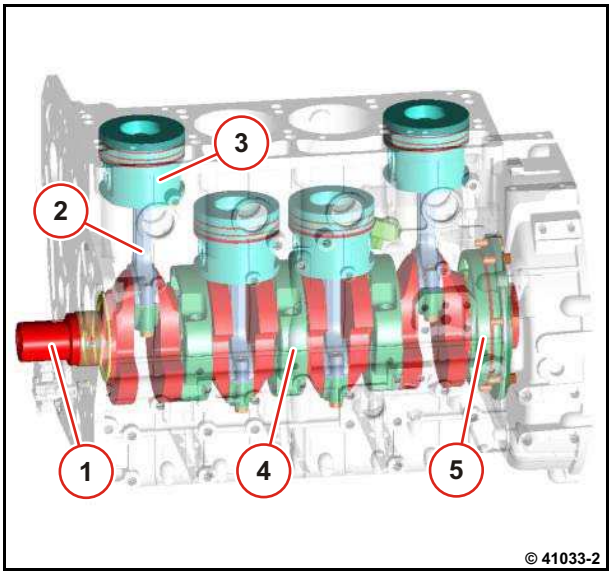

- Remove gear case cover.

  W 04-04-09

- Remove flywheel.

  W 12-06-01

- Remove piston and connection rod.

  W 02-09-03

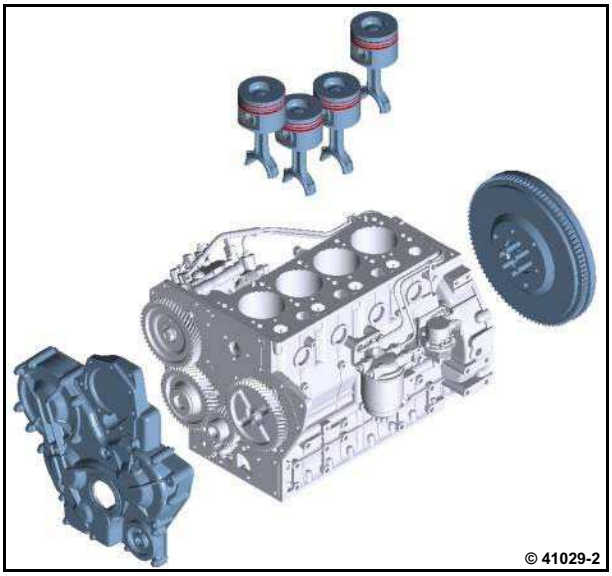

- Unscrew screw (1).
- Pull out journal (2).
- Remove idler gear (3).

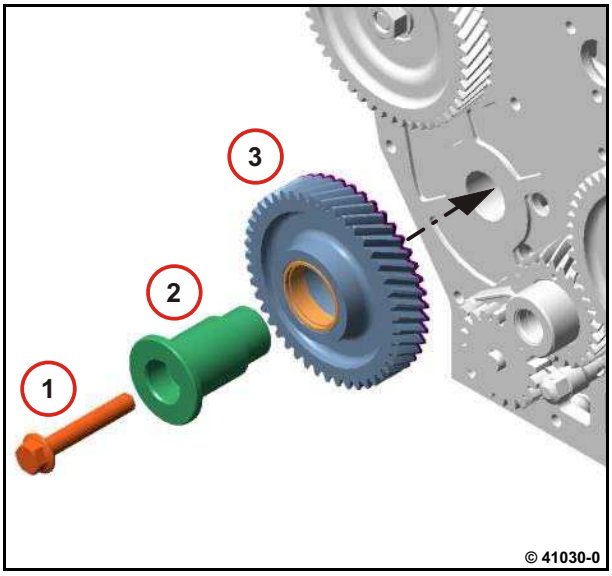

- Unscrew screw (1).
- Remove camshaft toothed wheel (2).

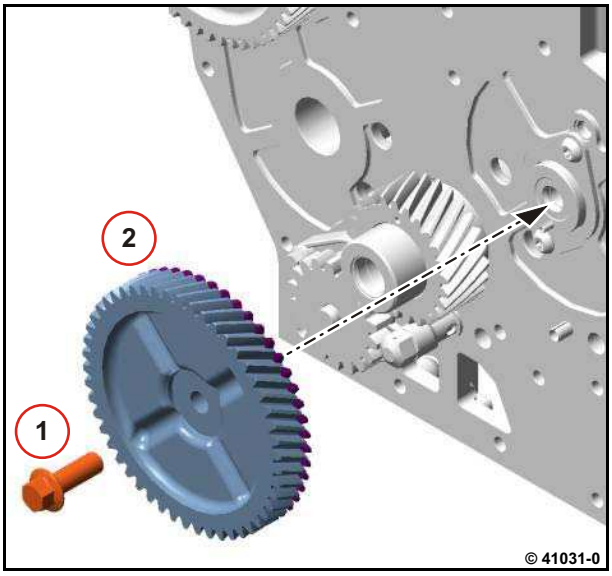

- Pull off camshaft toothed wheel with 3-arm puller.

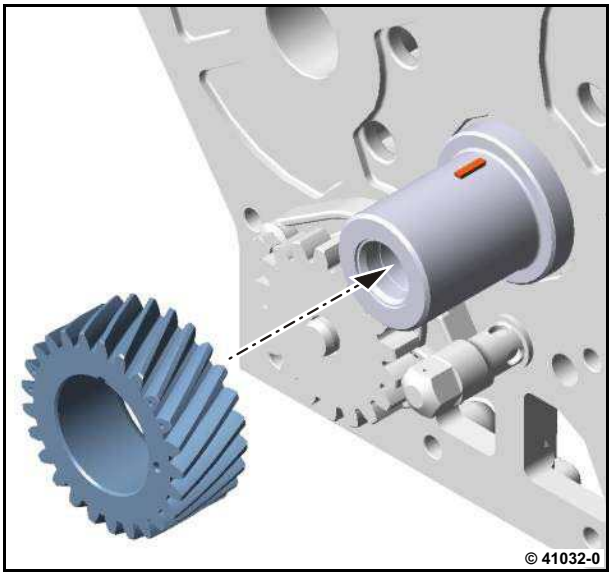

- Unscrew screws (1).
- Lever out main bearing housing (2) with a suitable tool in the recess clearances.

Make sure that the thrust washer halves do not fall into the crankcase.

- Visually inspect the components.

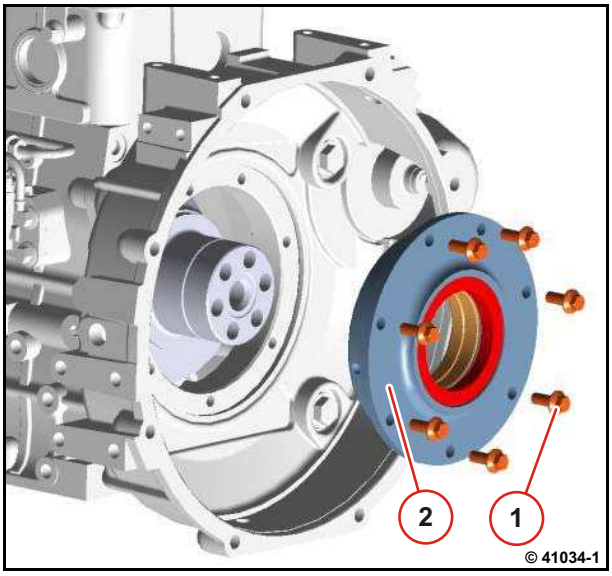

- Unscrew screw (1).
- Remove oil suction pipe (2).
- Unscrew fixing screws (3).
- Remove oil pressure regulating valve (4).

W 08-11-10

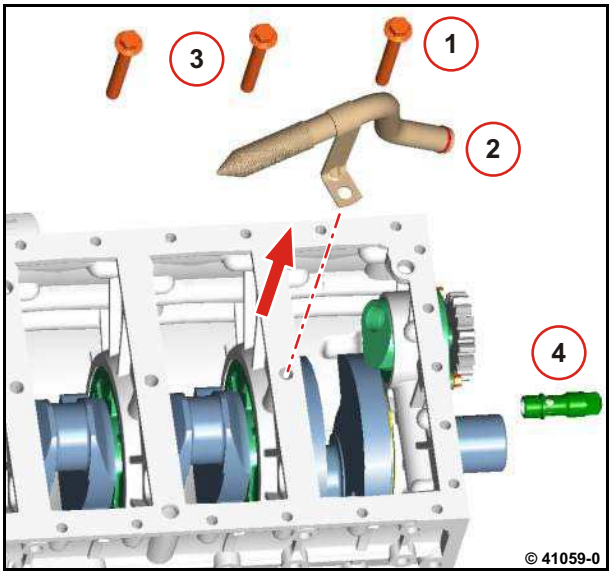

- Remove crankshaft.
- Visually inspect the components.

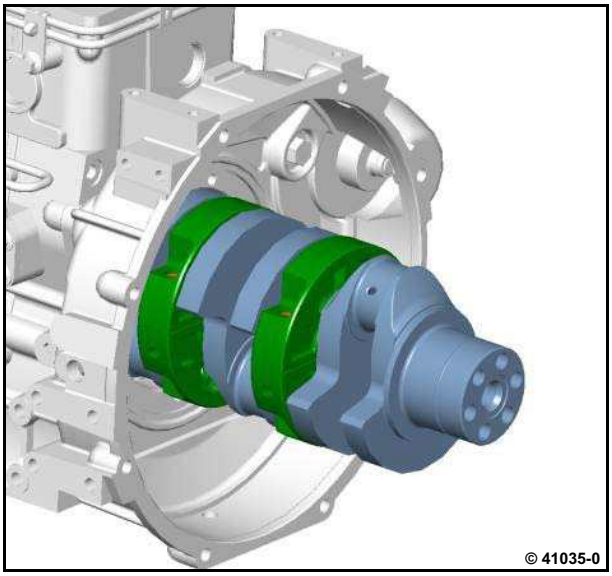

Removing the main bearing

- Insert thrust pad (1) in bearing bush.
- Insert threaded rod (2).
- Insert counter support (3).
- Mount washers and screw on nuts.

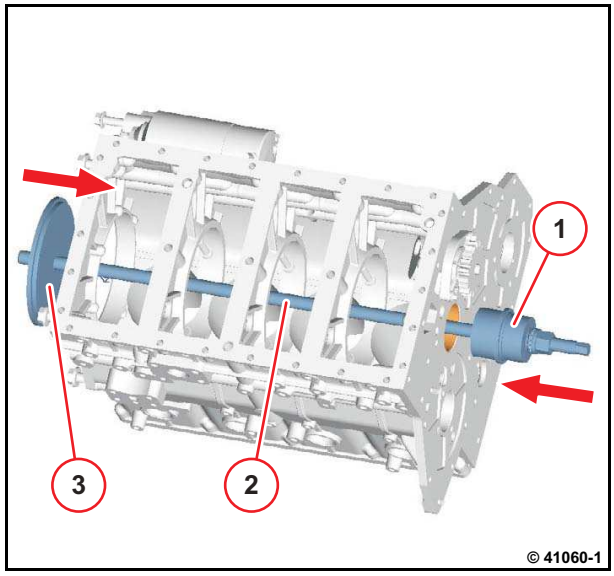

- Turn the nut (1) clockwise.

The bearing bush is pressed onto the crankcase by the thrust pad.

- Dismantle assembly tool.
- Remove bearing bush.

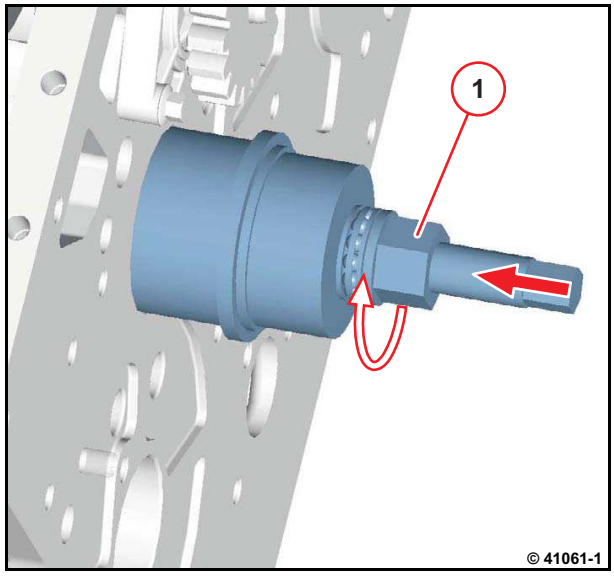

- Clamp main bearing housing in the vice.

Use cushioned jaws.

- Insert thrust pad (1) in bearing bush.
- Insert threaded rod (2).
- Insert counter support (3).
- Mount washers and screw on nuts.
- Turn nut (4) clockwise.

The bearing bush is pressed onto the main bearing housing by the thrust pad.

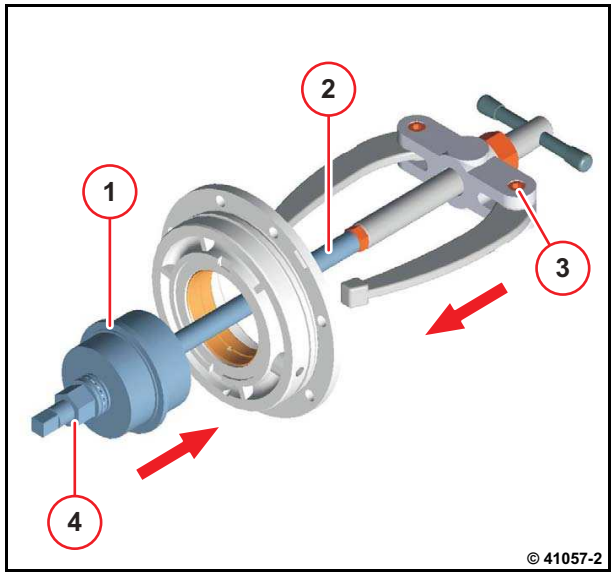

Installing the main bearing

- Oil bearing bush with engine oil.
- Press in bearing bush with assembly tool 143870.

Make sure the bearing bush is not twisted.

The installation depth is determined by the assembly tool.

Mark the position of the lubricating oil bore on the main bearing housing.

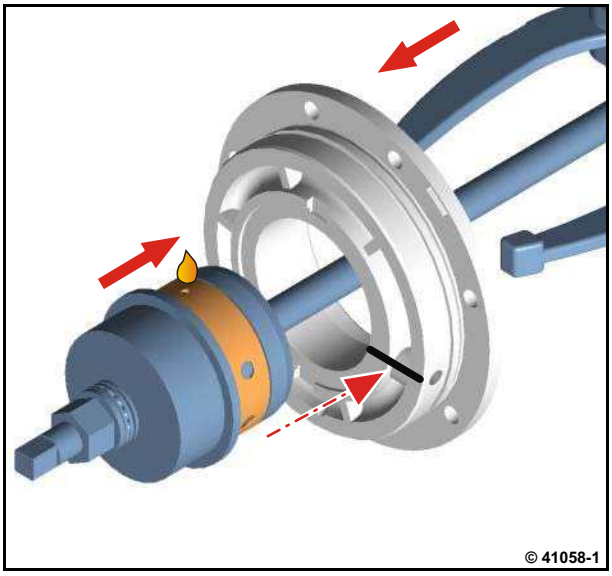

- Oil bearing bush with engine oil.
- Mount bearing bush.
- Mount guide plate (1).
- Insert threaded rod (2).
- Insert counter support.
- Mount washers and screw on nuts.

Mark position of the lubricating oil bore.

Position bearing bush.

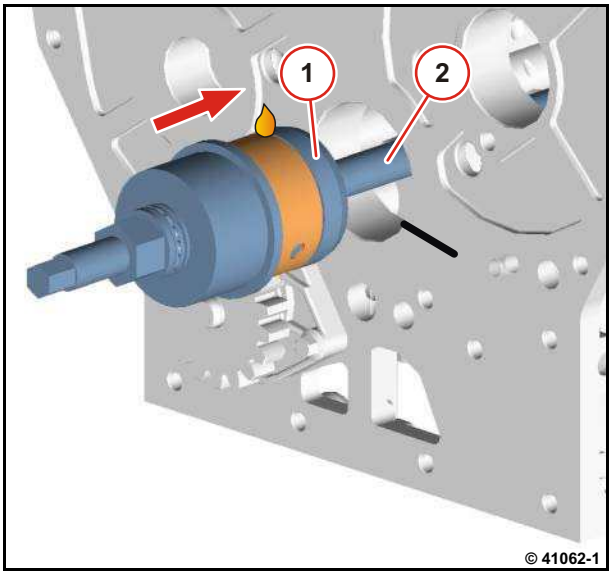

- Turn the nut (1) clockwise.

The bearing bush is pressed into the crankcase by the thrust pad.

The installation depth is determined by the assembly tool.

Make sure the bearing bush is not twisted.

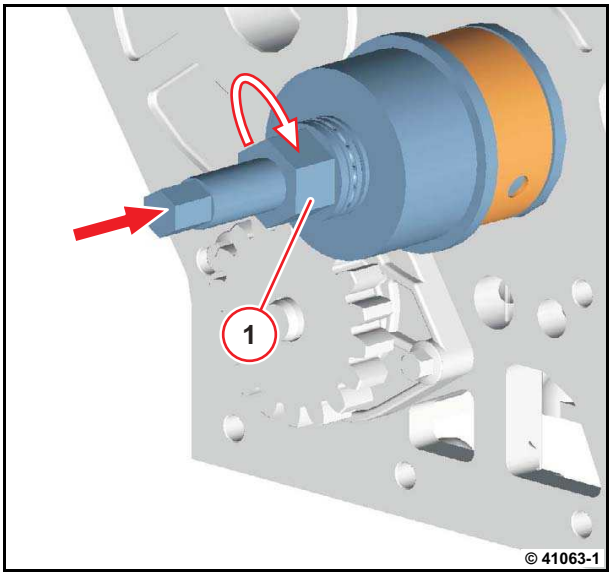

- Dismantle assembly tool.
- Remove assembly tool.
- Check that the lubricating oil bore is in line.

If the lubricating oil bore is not in line, the bearing bush must be removed and re-installed.

- Check installation depth of the bearing bush with depth measuring appliance.

ca. 3 mm

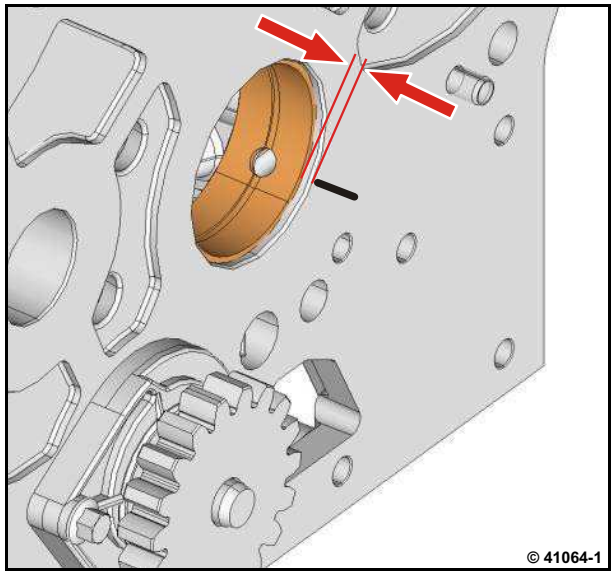

Installing the crankshaft

- Lightly oil bearing bush (1) with engine oil.
- Push crankshaft into crankcase.

Align screw thread (2) and through hole (3).

- Insert thrust washers (4) at the rear with grease.

Lubricating oil grooves face the crankshaft.

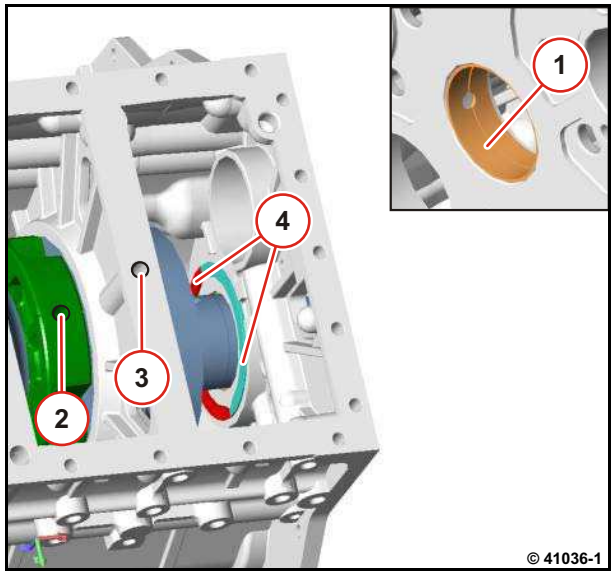

- Push in the crankshaft in the direction of the arrow to the stop.
- Tighten locating screws (1).
- Install oil suction pipe.

W 08-04-06

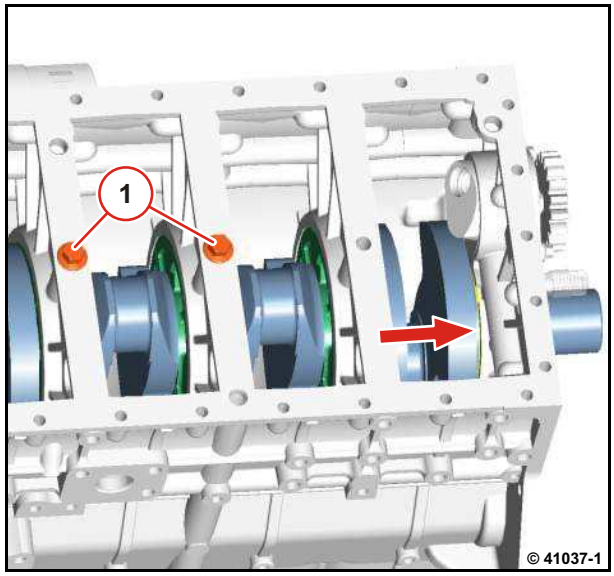

- Install main bearing housing (1).
- Tighten screws (2).
  - Step 1:
    15 Nm
  - Step 2:
    27 Nm
- Renewing the crankshaft sealing ring.
  W 02-02-02

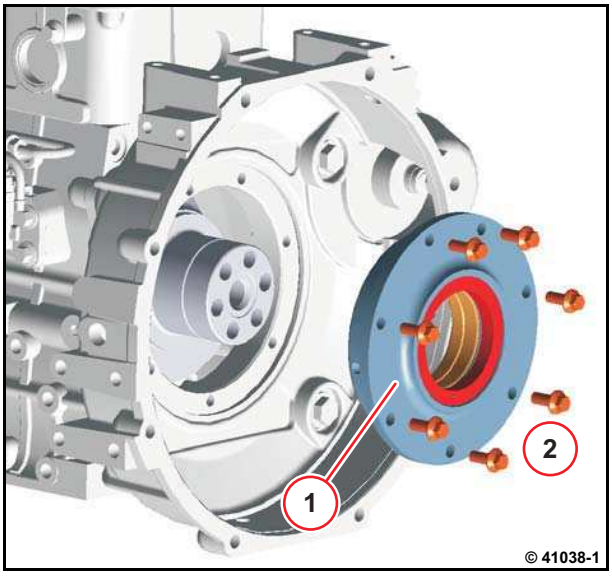

- Check axial backlash of crankshaft.
  W 02-01-04
- Heat up crankshaft toothed wheel to approx. 100 °C.

Danger!
Danger of burning!

- Mount crankshaft toothed wheel (1).

Note installation position of Woodruff key (2) and groove.

- Install oil pressure regulating valve.
  W 08-11-10

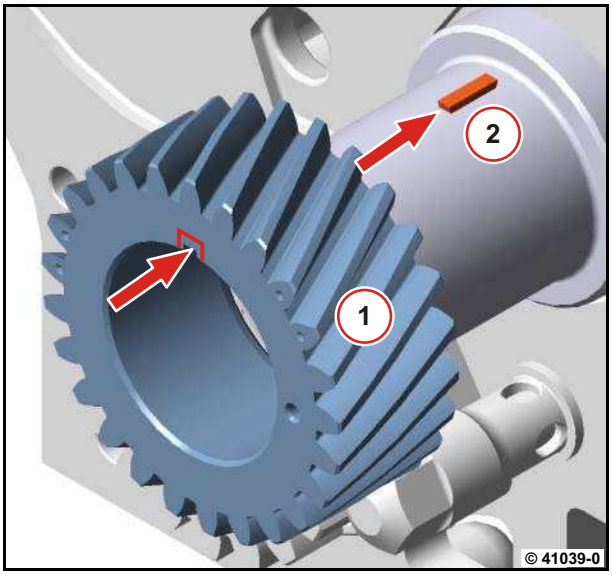

- Mount camshaft toothed wheel.

Mount camshaft toothed wheel with the bore on the clamping pin (1).

- Fasten screw (2).

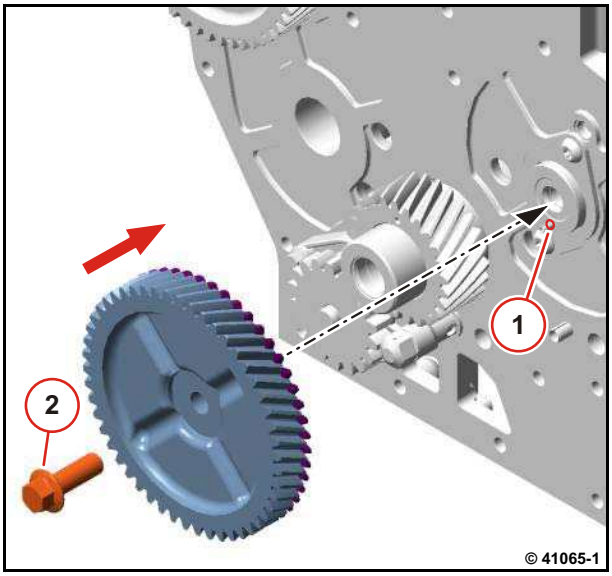

The marks (1) of the crankshaft toothed wheel and the camshaft toothed wheel must be in line!

- Tighten screw (2).

  81 Nm

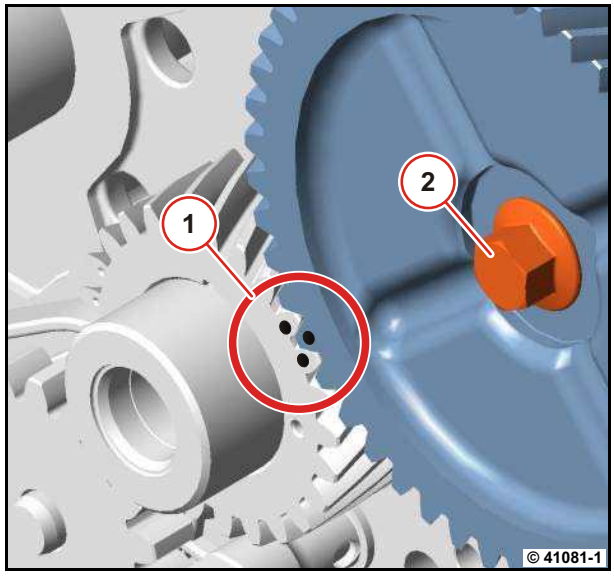

- Insert idler gear.

The marks (1) of the crankshaft toothed wheel, intermediate gear and fuel injector toothed wheel must be in line!

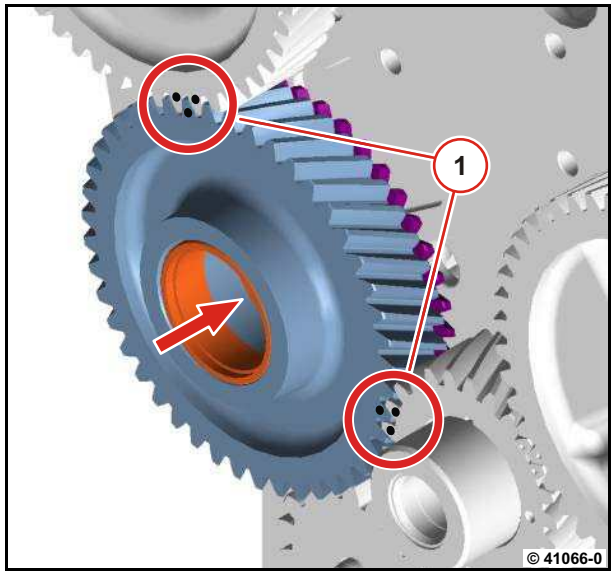

- Oil the journal lightly.
- Insert the journal carefully into the needle bearing.
- Tighten screw.

  81 Nm

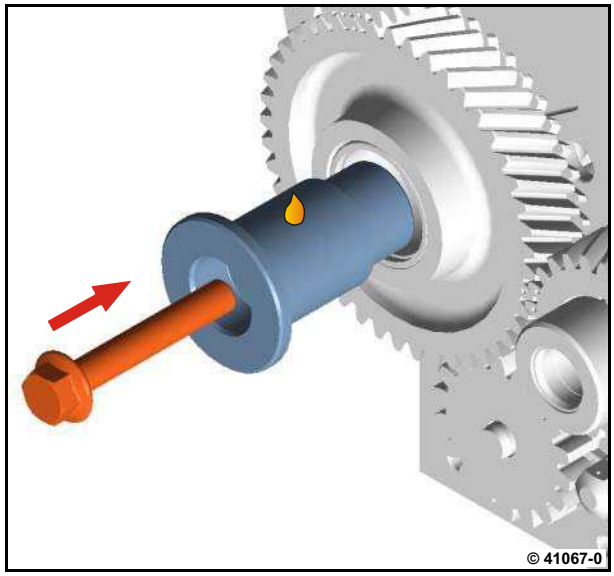

- Install piston and connection rods.

  W 02-09-03

- Mount gearcase cover.

  W 04-04-09

- Install flywheel.

  W 12-06-01

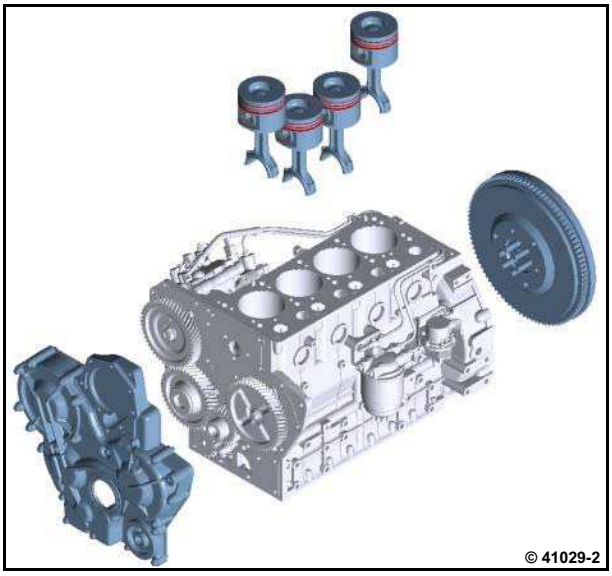

Removing and installing the piston and con rod

Commercial available tools

Special tools:
– Universal piston ring pliers 130300
– Piston ring compressor 130510

– W 01-04-04
– W 02-09-07
– W 08-04-07
– W 08-04-06

Removing the piston and con rod

1. Piston rings
2. Piston
3. Piston pin
4. Connection rod
5. Big end bearing cap
6. Coolant duct in the crankcase

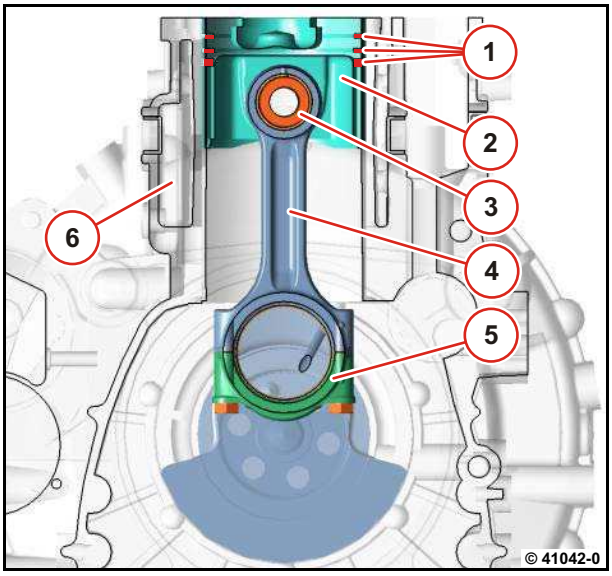

- Remove cylinder head.

  W 01-04-04

- Remove lubricating oil pan.

  W 08-04-07

- Remove oil suction pipe.

  W 08-04-06

- Pull out oil dipstick.

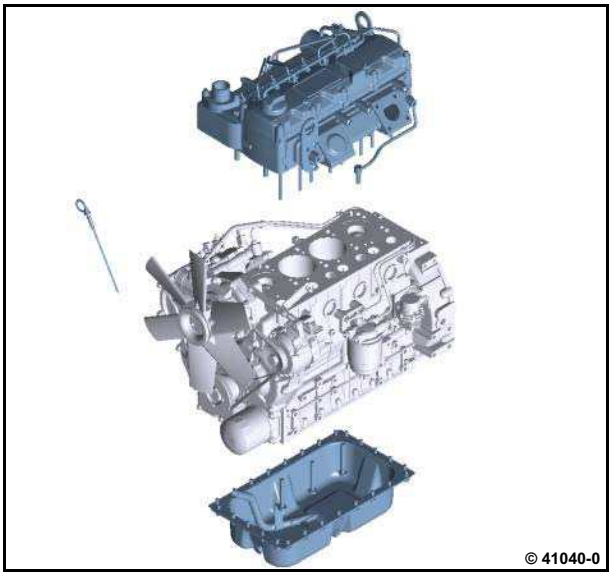

Removing the big end bearing cap

- Position lifting bearing journal in LDC position.
- Unscrew screws (1).
- Remove big end bearing cap (2).
- Remove bearing shell (3).

Lay out components in the order in which they should be installed.
Note order of cylinders.

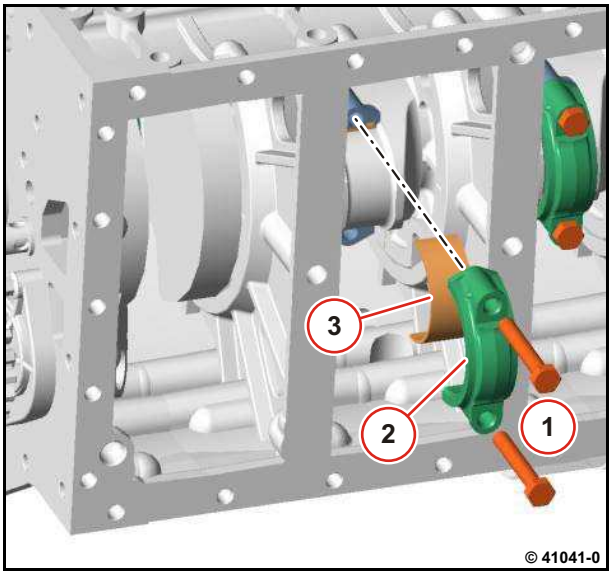

6

- Press out the piston and connection rod.

Lay out components in the order in which they should be installed.
Note order of cylinders.

- Remove con rod bearing shells (1).
- Visually inspect the components.

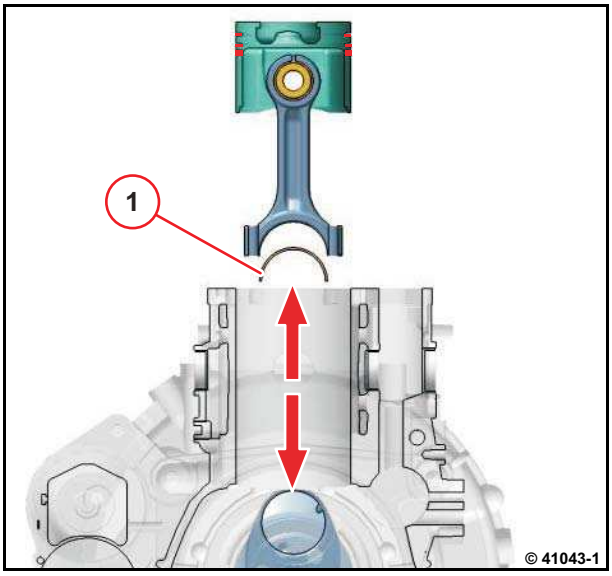

Removing the piston

- Remove locking ring with locking ring pliers.
- Press piston bolts out of piston and con rod.
- Remove connection rod.
- Visually inspect the components.

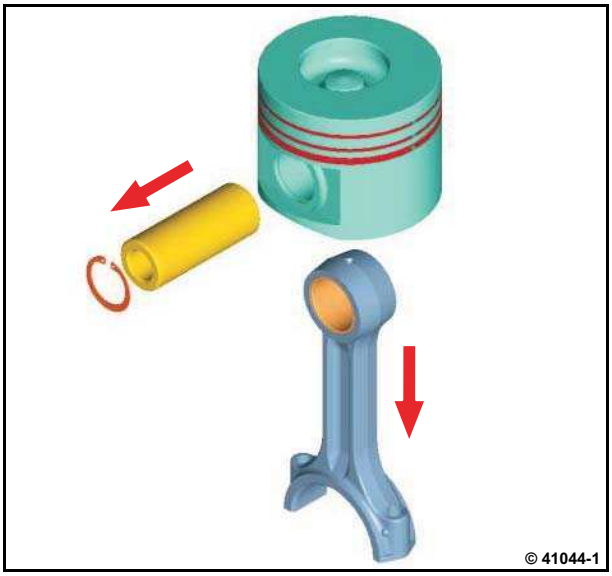

- Remove piston rings with universal piston ring pliers.
- Check piston.

W 02-09-07

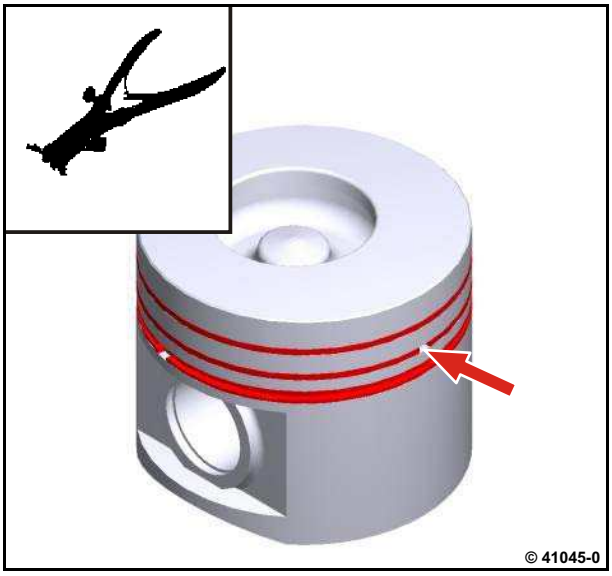

Completing con rod and piston

- Insert new locking ring.

Ensure that the installation location is free from faults.

- Insert con rod.

The labelling on the piston base and the numbered label of the connection rod face the camshaft side.

- Oil the piston bolt lightly.
- Press the piston bolt through.
- Insert new locking ring.

Ensure that the installation location is free from faults.

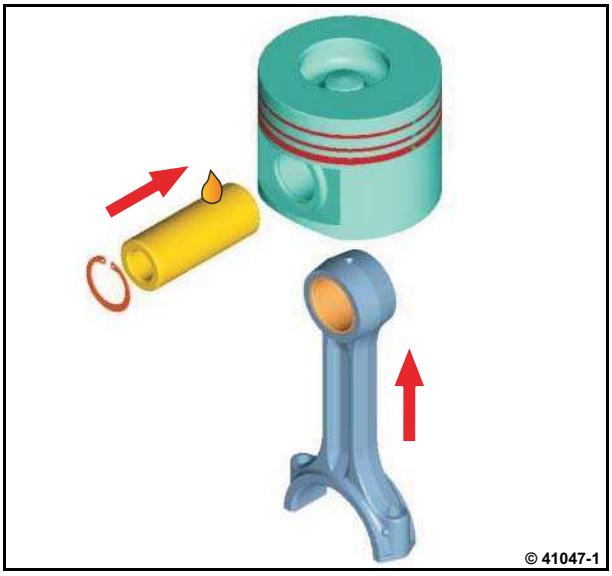

Installing the piston and con rod

- Insert bearing shell in the con rod.

Note the assignment of the bearing shells. The anti-rotation lock (1) must lock in groove (2).

- Insert bearing shell in the respective big end bearing cap.

Note the assignment of the bearing shells. The anti-rotation lock must lock in groove.

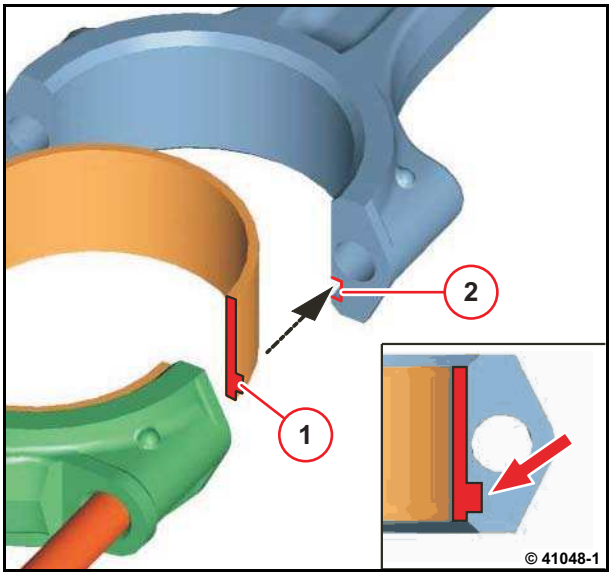

- Install piston rings with universal piston ring pliers.
- Arrange the piston ring joints with an offset of about 120° to each other.

Do not turn the piston rings any further.

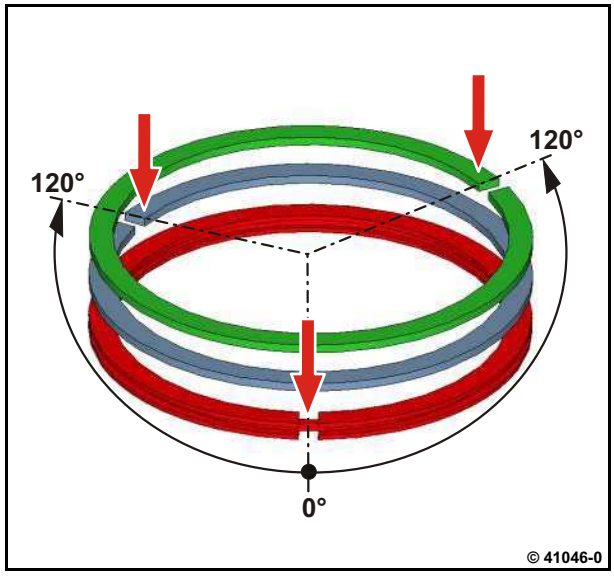

6

- Lightly oil cylinder running surface, piston, piston rings and lifting bearing journal lightly.
- Clamp piston rings with piston ring compressor.
- Set lifting journal at bottom dead centre (BDC).
- Push piston and con rod completely into cylinder.

The piston ring compressor must lie flat on the crankcase.

- Press the con rod carefully against the lifting journal.

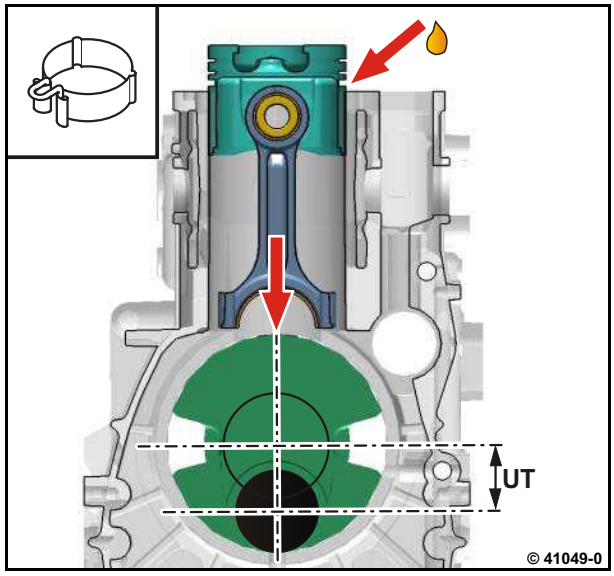

Note installation position!

The numbered label faces the camshaft side.

Attention!
Do not jam the con rod with the crankshaft.

- Mount big end bearing cap.

Note the assignment of the big end bearing cap.
- The identification numbers (1) on the con rod and the big end bearing cap must be identical and opposite to each other when assembled.

- Tighten new screws.

35 Nm

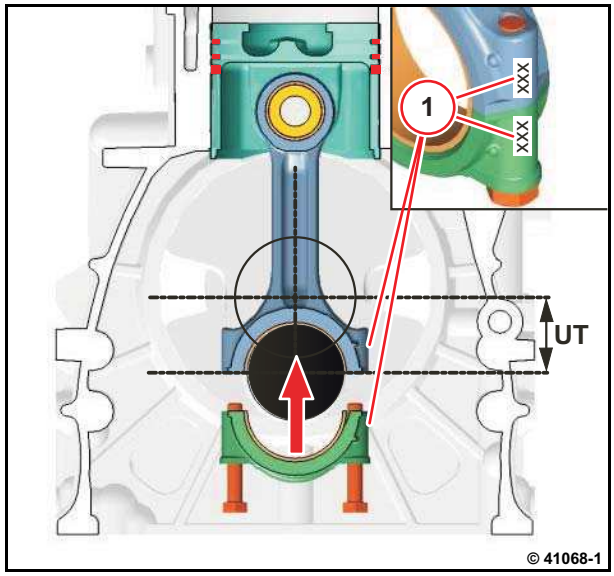

- Insert oil dipstick.
- Install oil suction pipe.

  W 08-04-06
- Install lubricating oil pan.

  W 08-04-07
- Install cylinder head.

  W 01-04-04

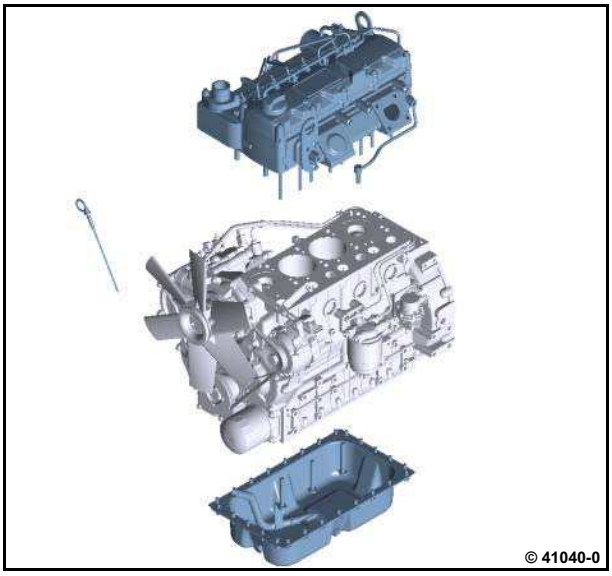

Checking the piston

Commercial available tools:
– Micrometer gauge
– Internal measuring device

Special tools:
– Dial gauge. 100400

– W 02-09-03

When the piston wear limit is reached the piston must be replaced.

Checking the piston bolt bore

- Remove piston.

  W 02-09-03

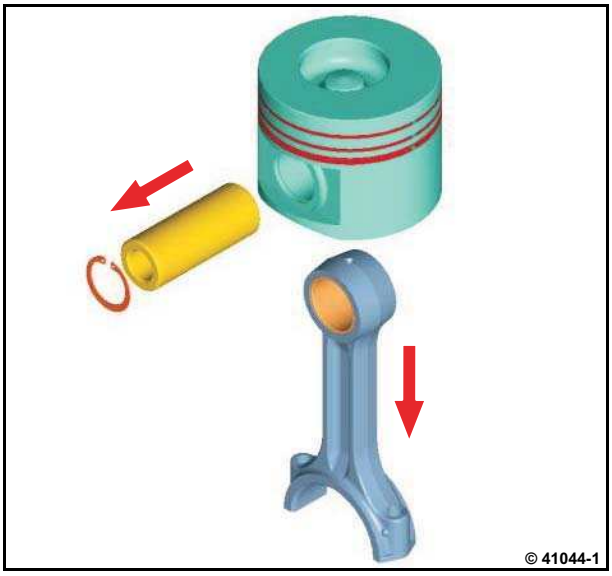

- Prepare internal measuring device:
  – Mount probe bolt for the appropriate measuring range in the internal measuring device.
  – Mount dial gauge with approx. 1 mm pre-tension in the internal measuring device.
  – Set micrometer gauge to 28 mm.
  – Balance the internal measuring device between the test surfaces of the micrometer gauge and set the dial gauge at the reversal point of the pointer to "0".

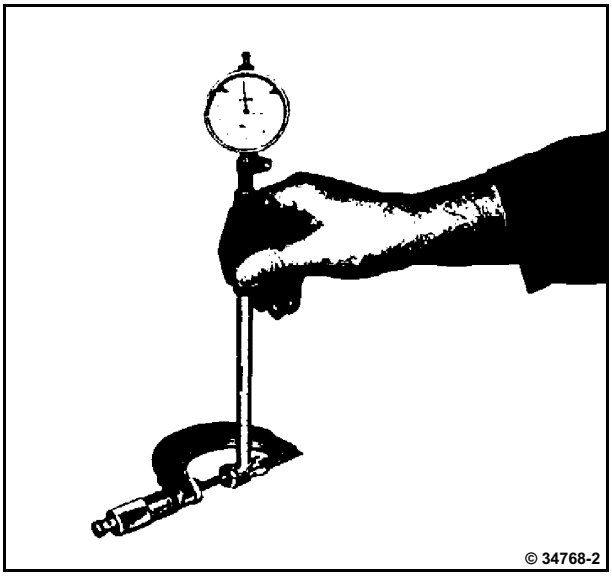

Diagram for measuring the piston bolt bore at the points "a" and "b" in the levels "1" and "2".

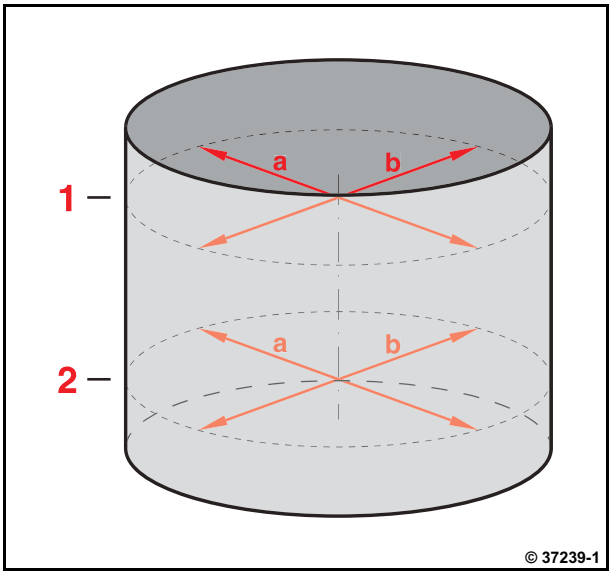

- Insert internal measuring device in the piston bolt bore.
- Balance the internal measuring device at the given measuring points and read off the measured value at the reversal point of the pointer.

See schematic diagram for measuring points.

P02 78

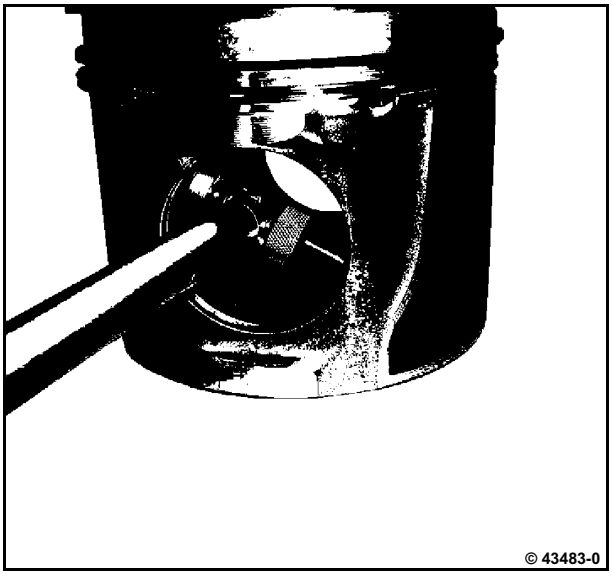

Checking the piston diameter

Diagram for measuring the piston diameter at the measuring points "1, 2 and 3", transverse to the piston bolt bore.

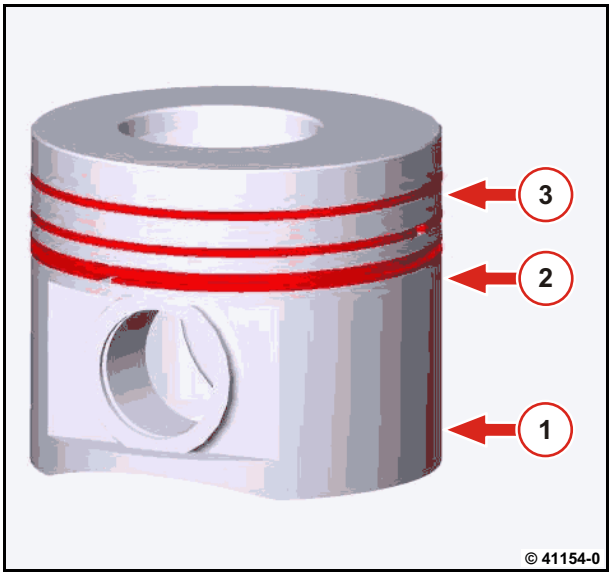

- Measure piston diameter with micrometer gauge.

See schematic diagram for measuring points.

P02 71

- Complete con rod and piston.

W 02-09-03

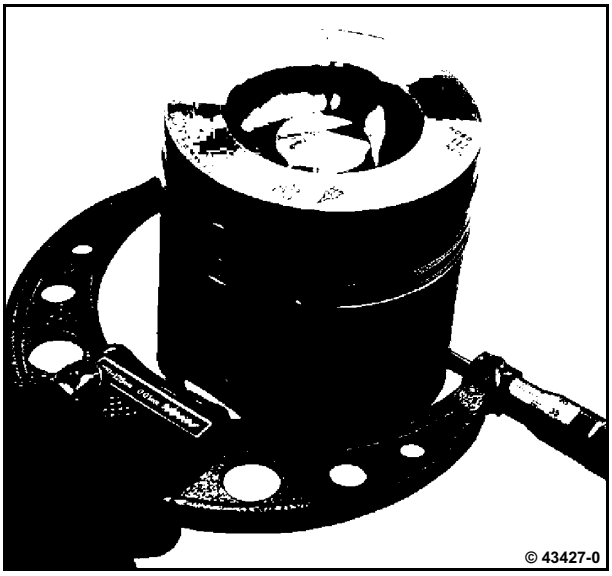

Removing and installing the connection housing

Commercial available tools

– W 13-03-02
– W 12-06-01

Removing the connection housing

- Remove starter (1).

  W 13-03-02

- Remove flywheel (2).

  W 12-06-01

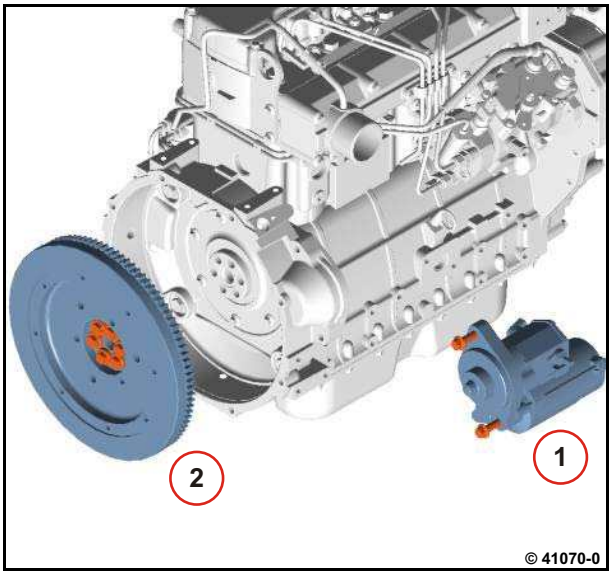

- Remove screws.
- Remove connection housing.
- Visually inspect the component.

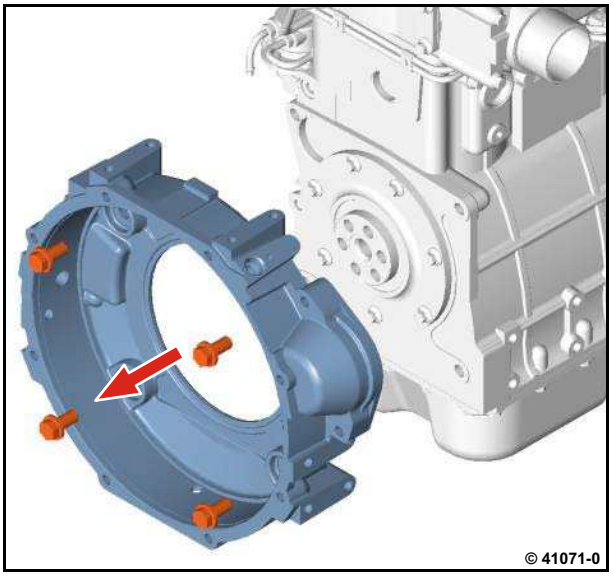

Installing the connection housing

- Mount connection housing.
- Tighten screws.

  81 Nm

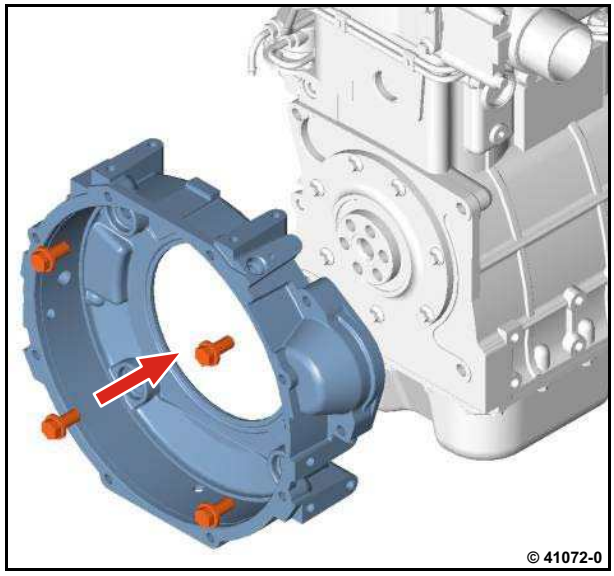

- Install flywheel (1).

  W 12-06-01

- Install starter (2).

  W 13-03-02

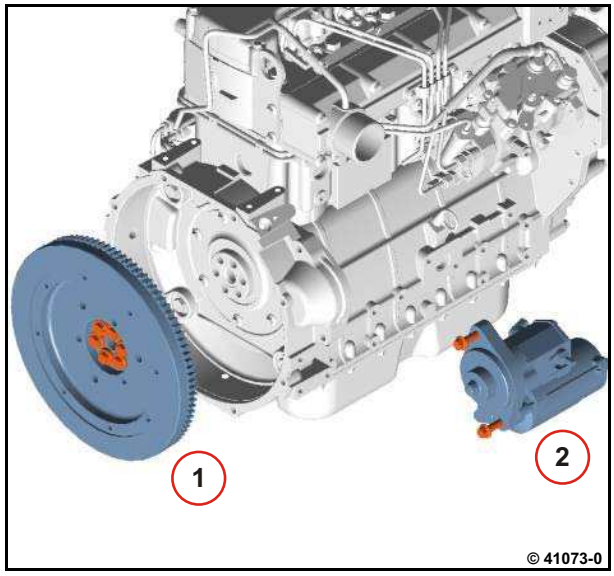

Removing and installing the gearcase cover

Commercial available tools

Special tools:
– Assembly tool 142790

– W 12-02-02
– W 09-07-08
– W 13-02-03
– W 08-11-10
– W 08-10-07

Collect leaking operating substances in suitable vessels and dispose of according to regulations.
The engine oil and coolant should be added according to the operating manual.

Removing the gearcase

- Remove V-belt pulley.

  W 12-02-02

- Remove fan impeller.
- Remove generator.

  W 13-02-03

- Remove coolant pump.

  W 09-07-08

- Remove oil filter.

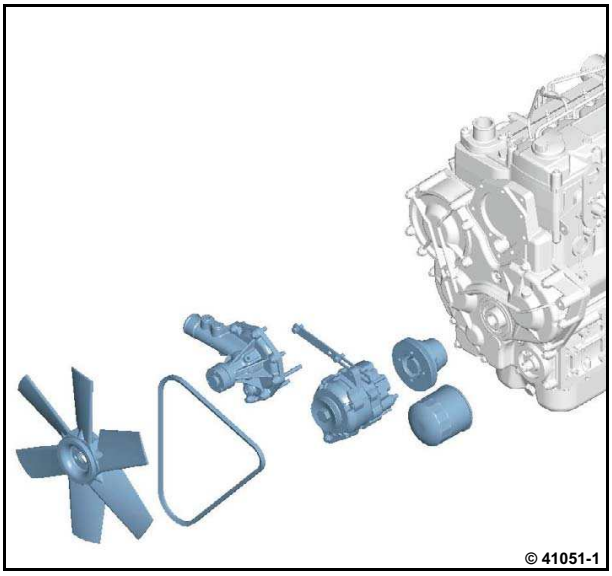

- Remove oil filter console.

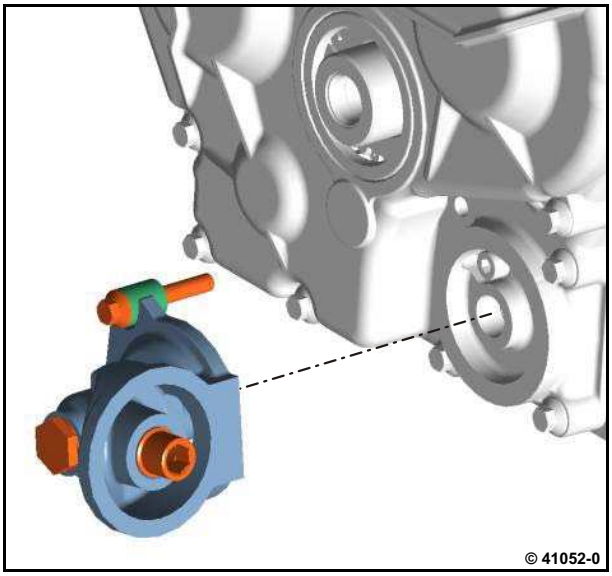

- Remove screws.
- Remove gearcase cover.

Attention!
Do not damage the sealing surfaces.

- Clean sealing surfaces.
- Visually inspect sealing surfaces (arrows).

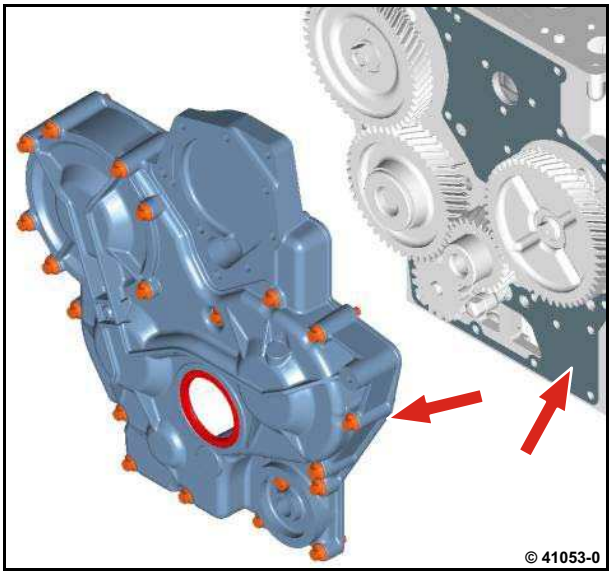

Installing the gearcase cover

- Knock out crankshaft sealing ring (1).

Attention!
Do not damage sealing surface when knocking out.

- Clean sealing surfaces.

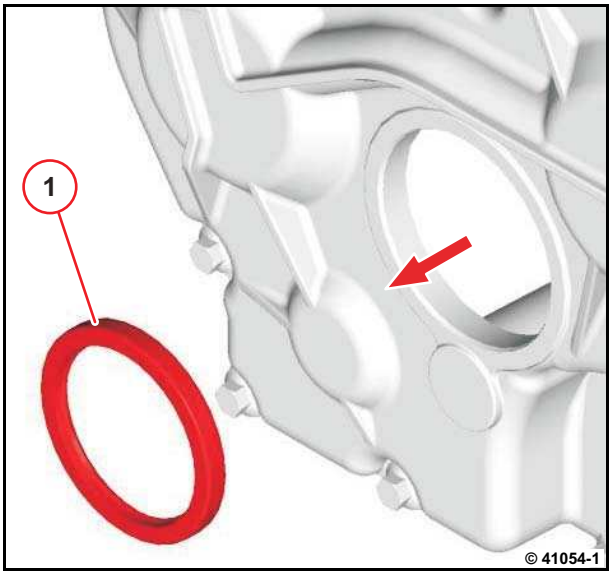

- Fix the new gasket to the crankcase with a little grease.

Note installation position!
Make sure the clamping bushings (1) are in place.

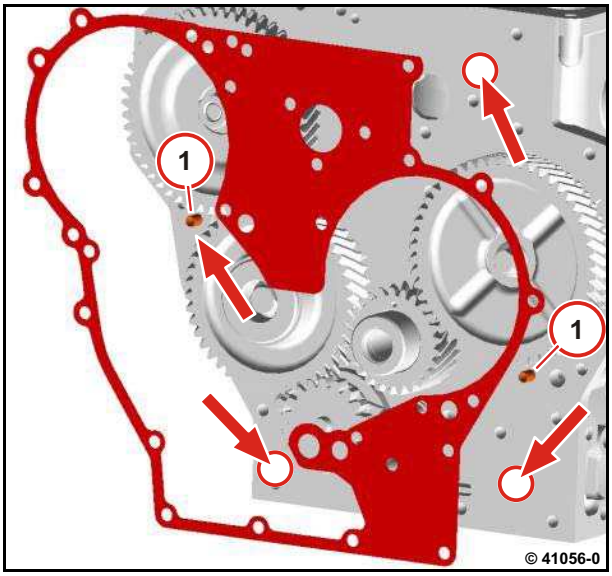

- Mount gearcase cover.

Ensure that the installation location is free from faults.

- Tighten the screws according to the tightening sequence.

27 Nm

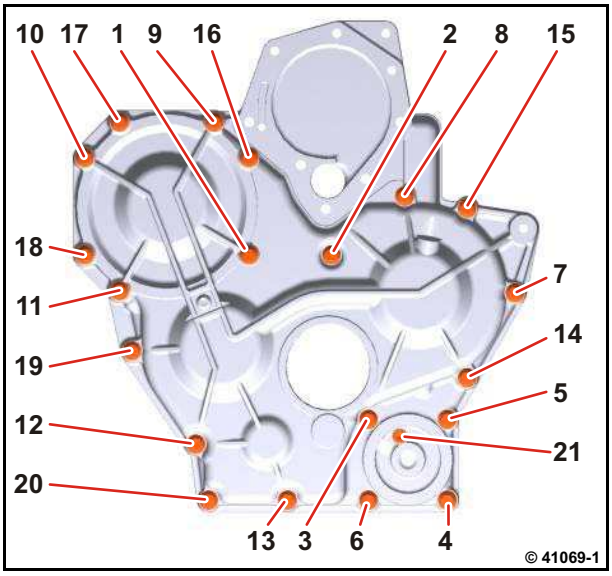

- Mount oil filter console.
- Tighten screws.

41 Nm

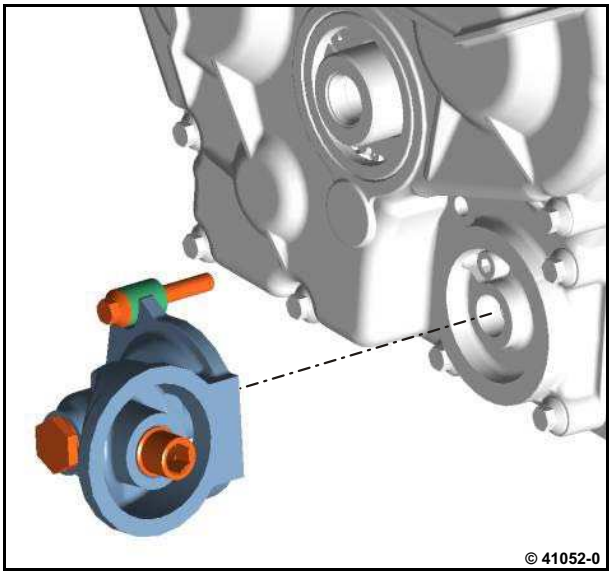

- Install oil filter.
- Install coolant pump.

W 09-07-08

- Install generator.

W 13-02-03

- Install crankshaft sealing ring (flywheel side).

W 02-02-04

- Install fan impeller.
- Install V-belt pulley.

W 12-02-02

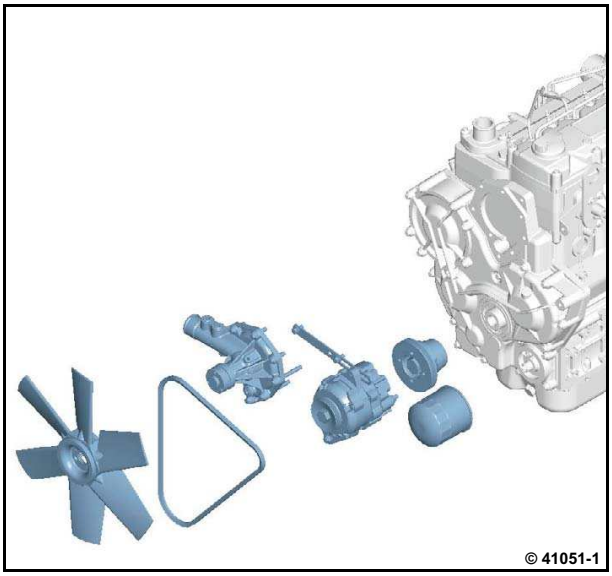

Removing and installing the camshaft

Commercial available tools

Special tools:
– Fixing pin 144180
– Dial gauge. 100400

– W 01-04-04
– W 04-04-09
– W 07-11-01

Removing the camshaft

- Remove cylinder head (1).

  W 01-04-04

- Remove gearcase cover (2).

  W 04-04-09

- Remove fuel supply pump (3).

  W 07-11-01

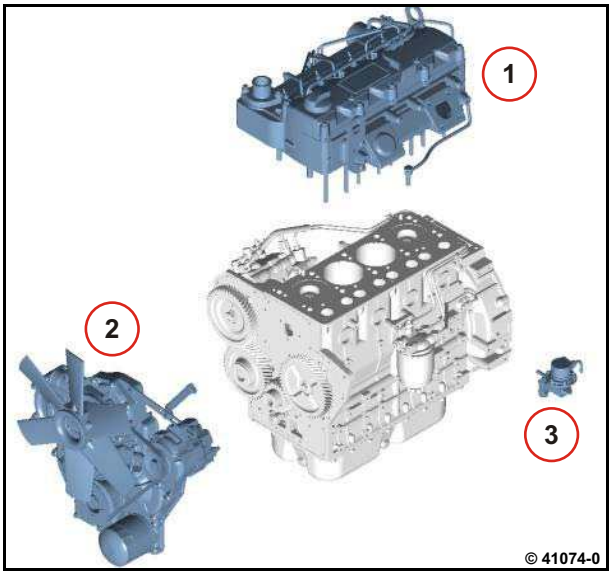

- Set piston (1) at top dead centre.
- Fix flywheel with fixing pin (2).

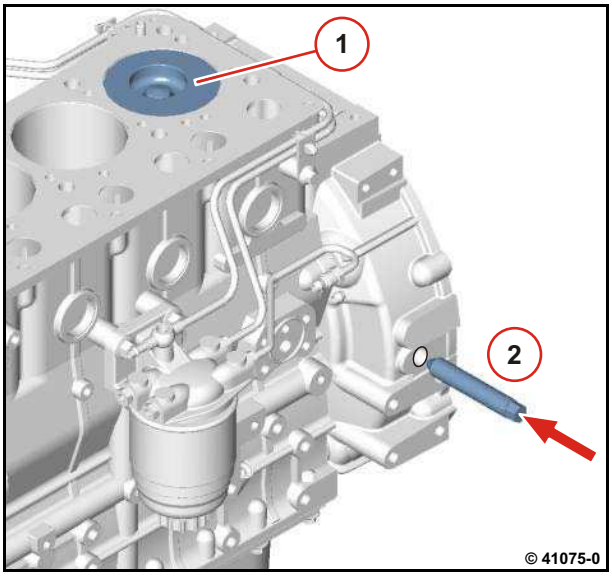

- Pull out hydro-tappet (1).

Use magnetic rod.

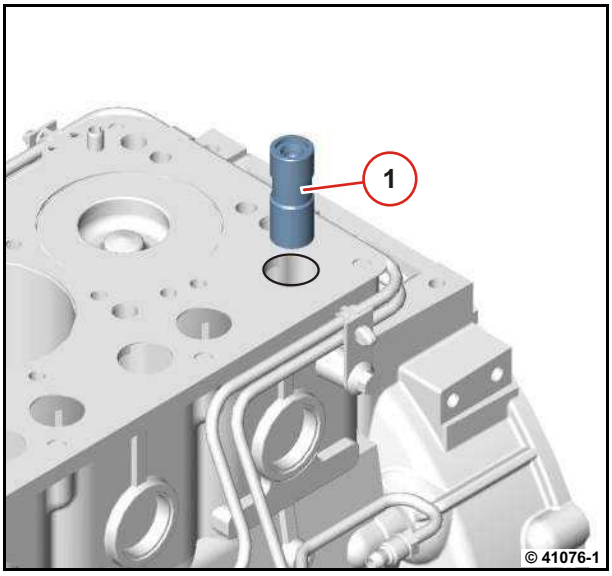

- Unscrew screw (1).
- Remove camshaft toothed wheel (2).

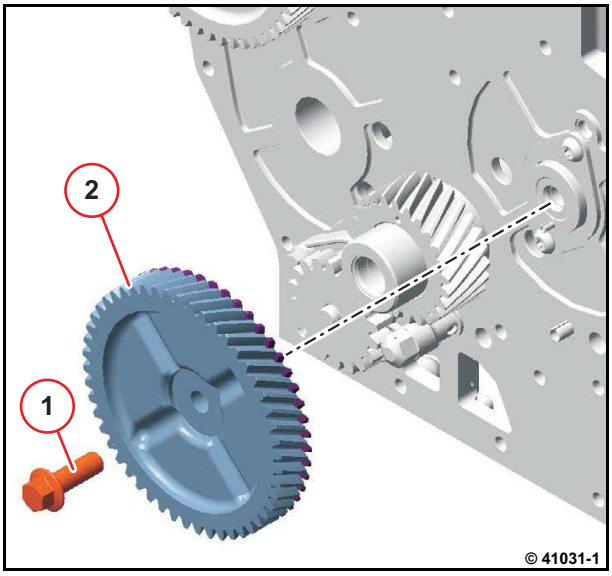

- Remove screws.
- Remove thrust washer.

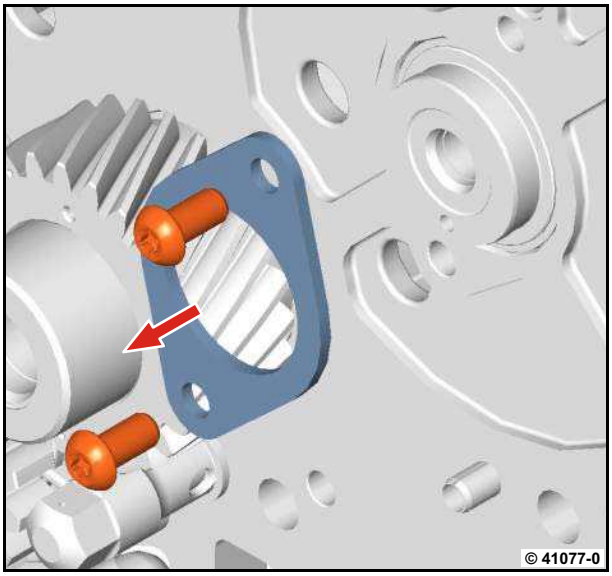

- Fasten screw (1).
- Pull out the camshaft carefully in the direction of the arrow.
- Visually inspect the components.

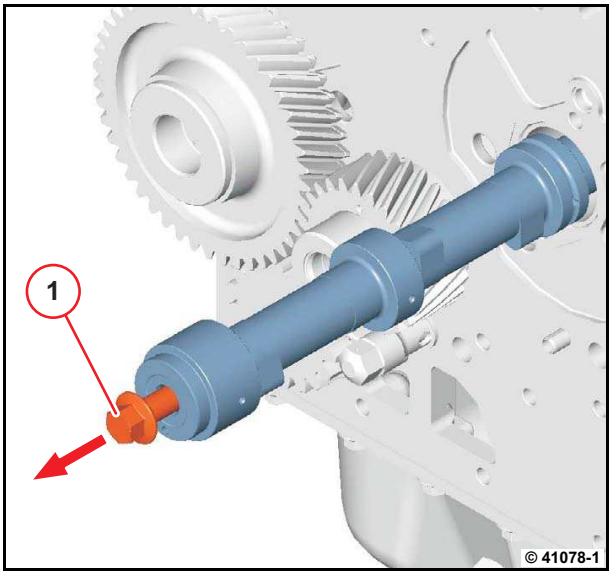

Installing the camshaft

- Oil camshaft bearing lightly.
- Insert camshaft carefully.

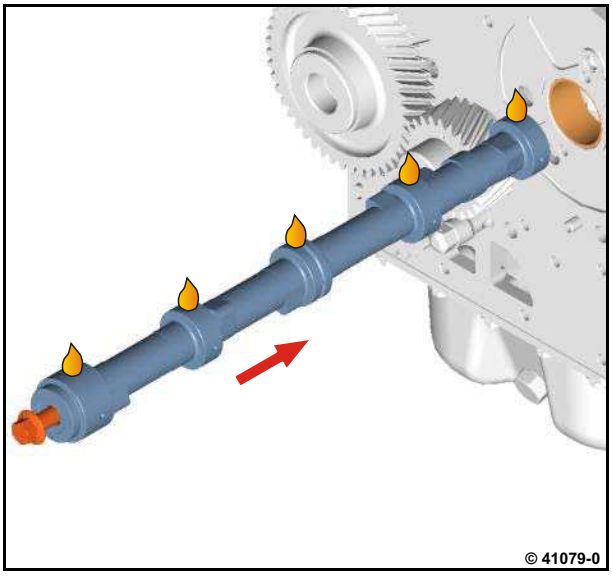

- Mount thrust washer.
- Tighten screws.

  21 Nm

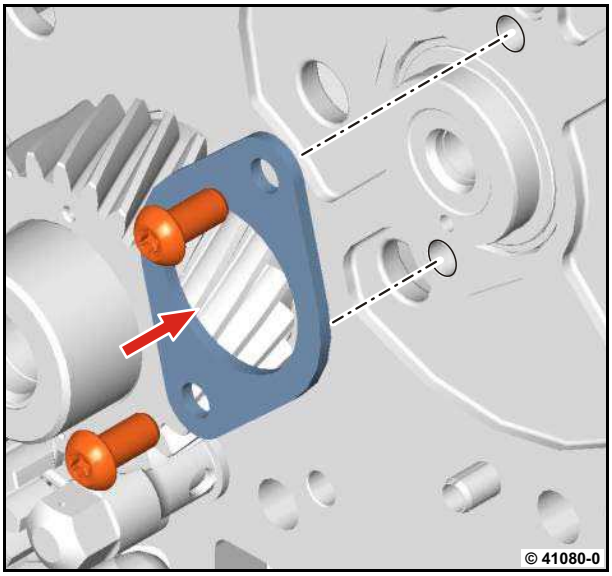

Checking the axial backlash

- Mount magnetic measuring stand.
- Insert dial gauge.
- Apply stylus to the camshaft end with pre-tension.
- Press crankshaft in direction of arrow.

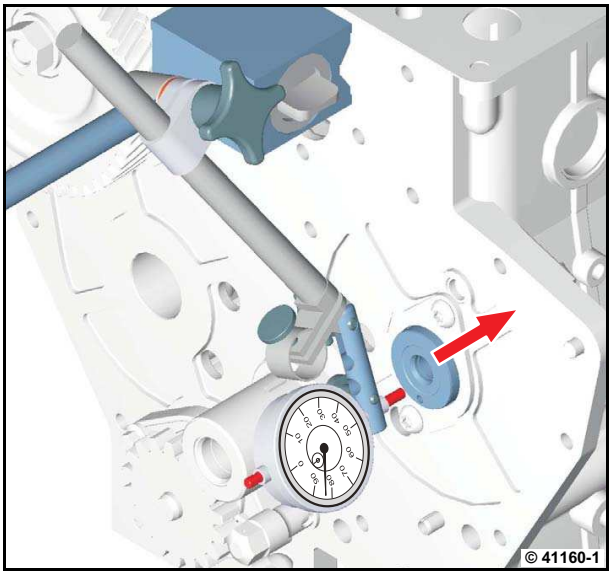

6

- Adjust dial gauge to "0".
- Press crankshaft in direction of arrow.
- Read actual value from dial gauge.
- Setpoint :

  0,07 - 0,29 mm

The axial backlash is not adjustable.
If the axial backlash is greater than the set-point, the camshaft must be renewed.

- Remove magnetic measuring stand.
- Remove dial gauge.

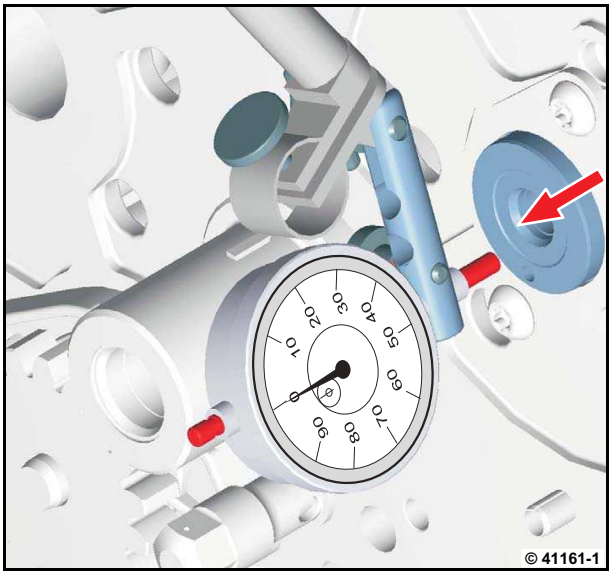

- Mount camshaft toothed wheel.

Mount camshaft toothed wheel with the bore on the clamping pin (1).

- Fasten screw (2).

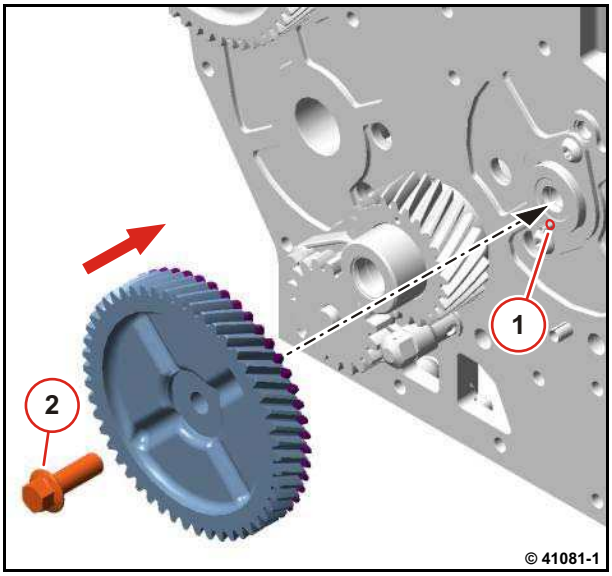

The marks (1) of the crankshaft toothed wheel and the camshaft toothed wheel must be in line!

- Tighten screw (2).

  81 Nm

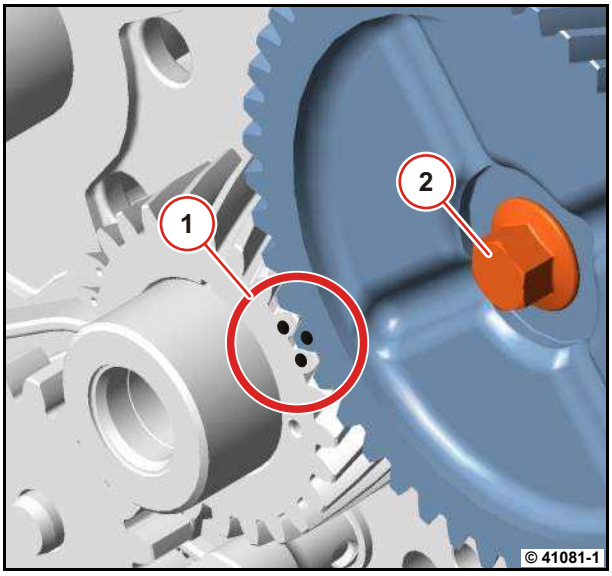

- Oil the hydro-tappet lightly.
- Insert hydro-tappet.

Note installation position of the hydro tappets.

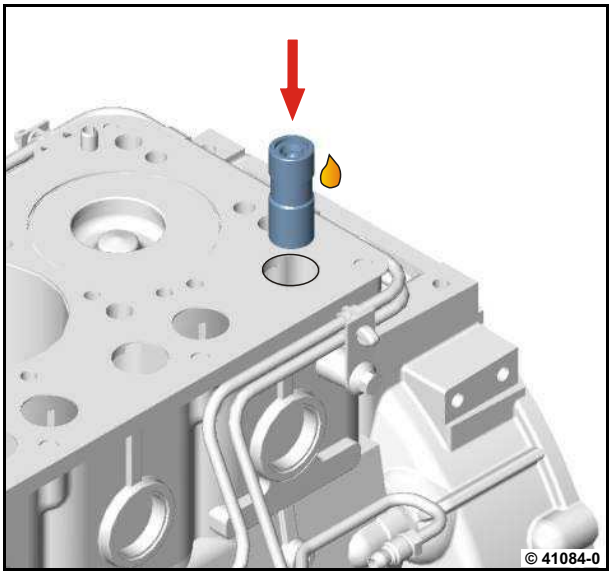

- Install the fuel supply pump (1).

  W 07-11-01

- Mount gearcase cover (2).

  W 04-04-09

- Install cylinder head (3).

  W 01-04-04

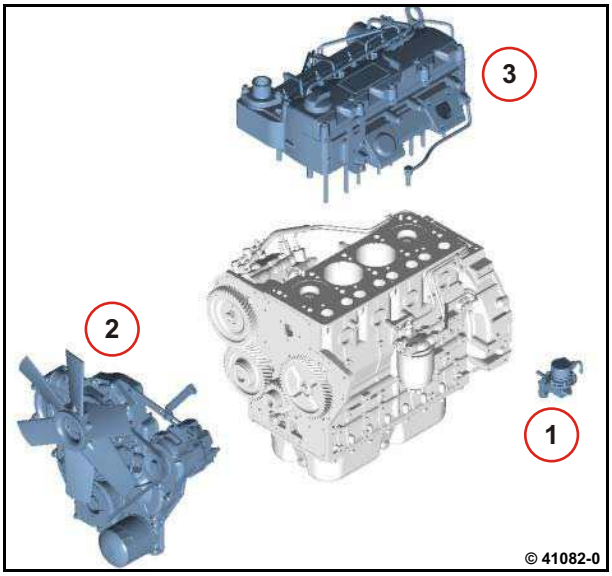

Removing and installing the exhaust manifold

Commercial available tools

– Fitting compound
  DEUTZ S1

Removing the exhaust manifold

- Unscrew screws (1).
- Remove exhaust manifold (2).
- Remove gasket (3).
- Visually inspect the components.

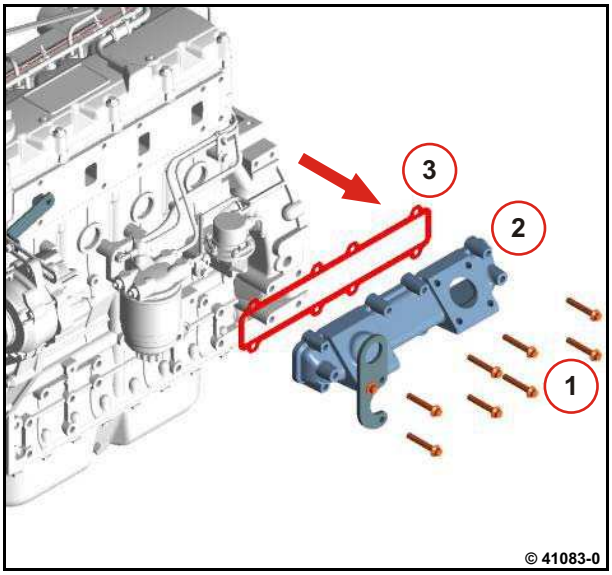

Installing the exhaust manifold

- Clean sealing surfaces.

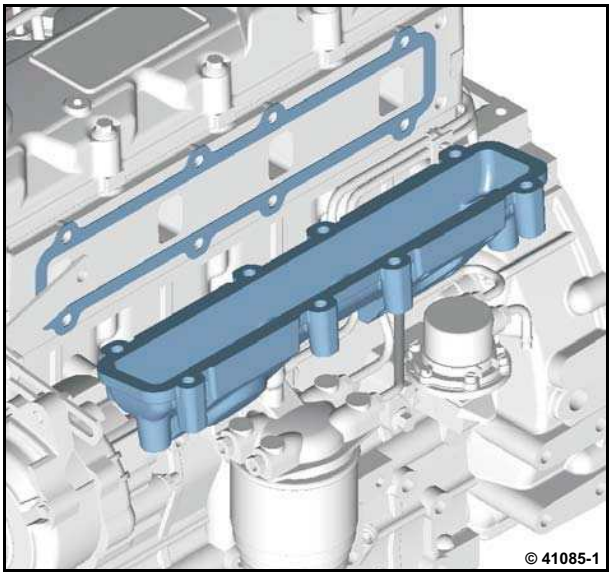

- Coat the screws with fitting compound .
- Insert new seal (1).
- Mount exhaust manifold (2).
- Tighten screws (3).

27 Nm

Tightening sequence: From the centre outwards.

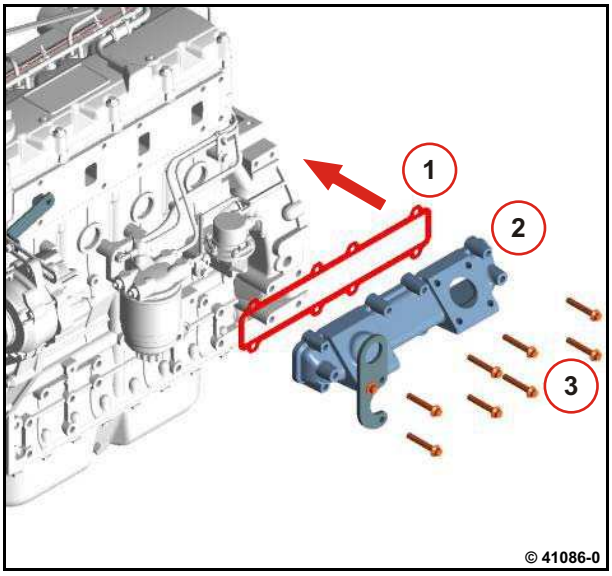

Removing and installing the intake manifold

Commercial available tools

– Fitting compound
  DEUTZ S1

Attention!
Ensure utmost cleanliness when working on the fuel system.
Carefully clean the area around the affected parts. Blow damp areas dry with compressed air.
Observe the safety regulations and national specifications for handling fuels.
Close all connections immediately after opening with new, clean plugs/caps.
Do not remove plugs/caps until immediately before assembling.
Collect leaking operating fluids in suitable vessels and dispose of according to regulations.

Removing the intake manifold

- Loosen pipe clip.
- Unscrew union nuts of the high pressure pipes.
- Remove all injection pipes.

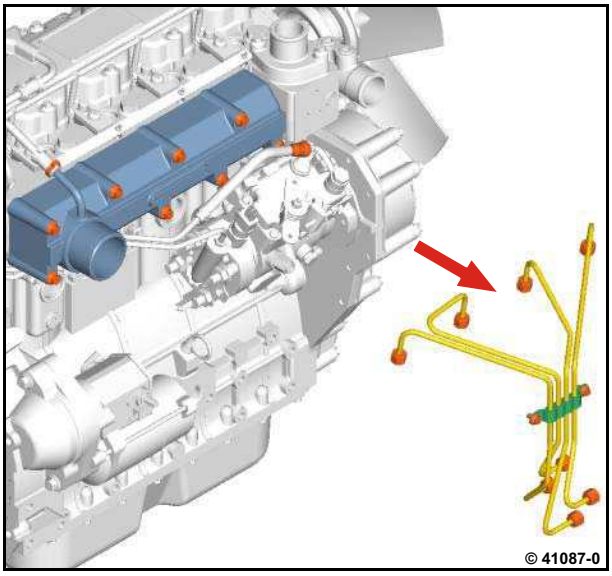

- Loosen hose clip (1).
- Unscrew screws (2).
- Remove intake manifold (3).
- Remove gasket (4).
- Unscrew fuel line (5).

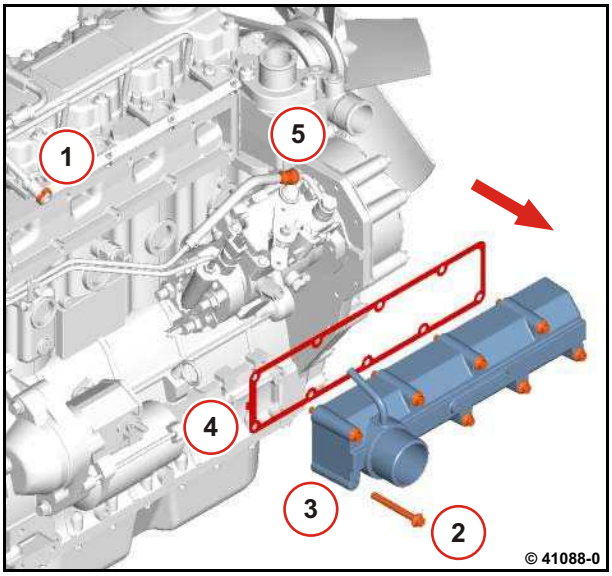

- Clean sealing surfaces.

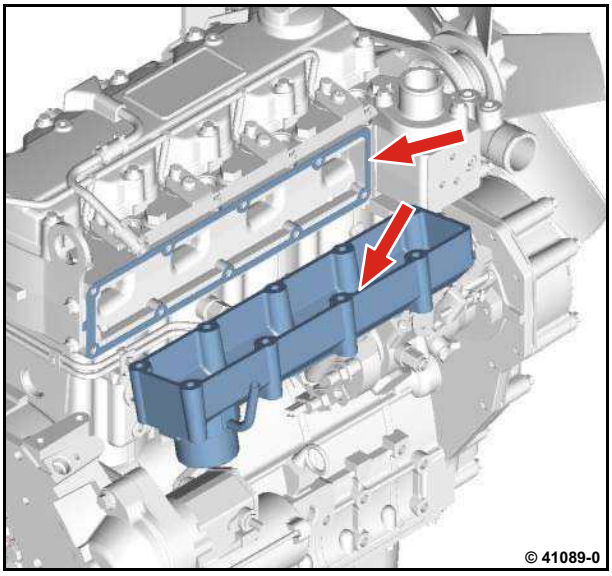

Install intake manifold

- Screw on fuel line (5).
- Coat the screws (2) with fitting compound.
- Mount gasket (4).
- Mount intake manifold (3).
- Tighten screws (2).

  27 Nm

  Tightening sequence: From the centre outwards.

- Tighten pipe clip (1).

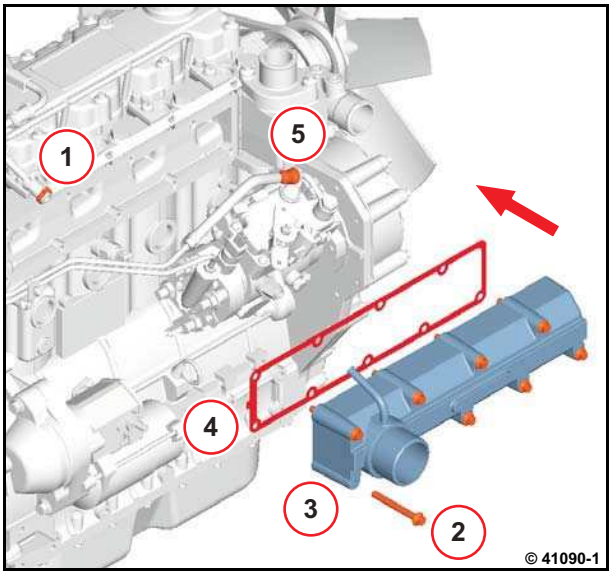

- Mount high pressure pipes.
- Screw on union nuts.

Attention!
Install injection pipes without tension.

- Tighten union nuts.

  28 Nm

- Position pipe clip.
- Tighten screw.

  9 Nm

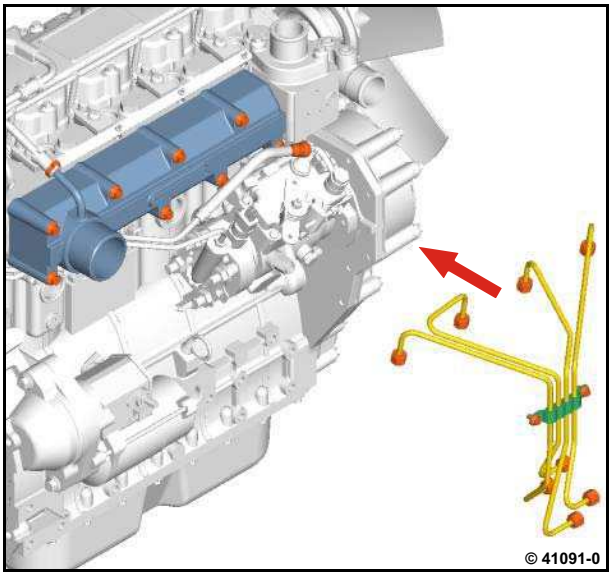

Removing and installing the fuel injector pump

Commercial available tools

Special tools:
– Measuring pin 110180

– W 04-04-09

Attention!
Ensure utmost cleanliness when working on the fuel system.
Carefully clean the area around the affected parts. Blow damp areas dry with compressed air.
Observe the safety regulations and national specifications for handling fuels.
Close all connections immediately after opening with new, clean plugs/caps.
Do not remove plugs/caps until immediately before assembling.
Collect leaking operating fluids in suitable vessels and dispose of according to regulations.

Removing the fuel injector pump

- Remove gearcase cover.

  W 04-04-09

- Loosen pipe clip.
- Unscrew union nuts of the high pressure pipes.
- Remove all injection pipes.

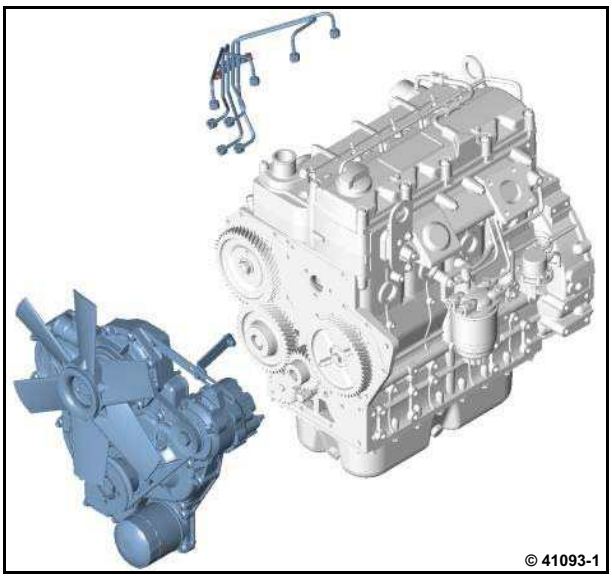

- Turn crankshaft.

The marks (1) of the crankshaft toothed wheel, intermediate gear and fuel injector toothed wheel must be in line!

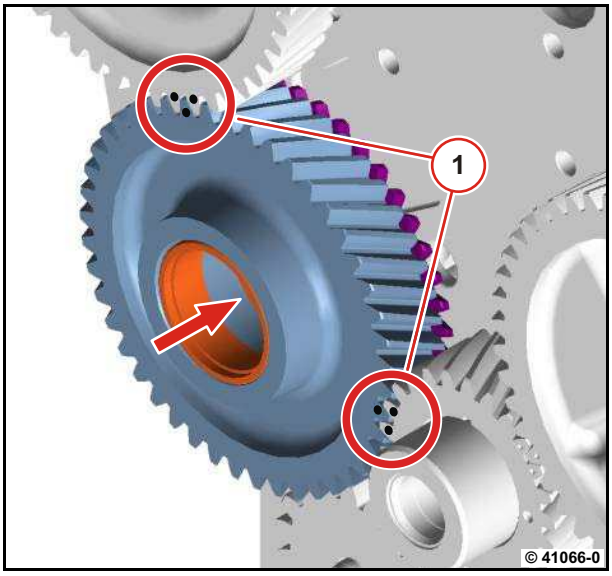

- Push the measuring pin (1) through the marking hole (arrow) into the crankcase.

The bore in the fuel injector toothed wheel must be in line with the bore in the crankcase.

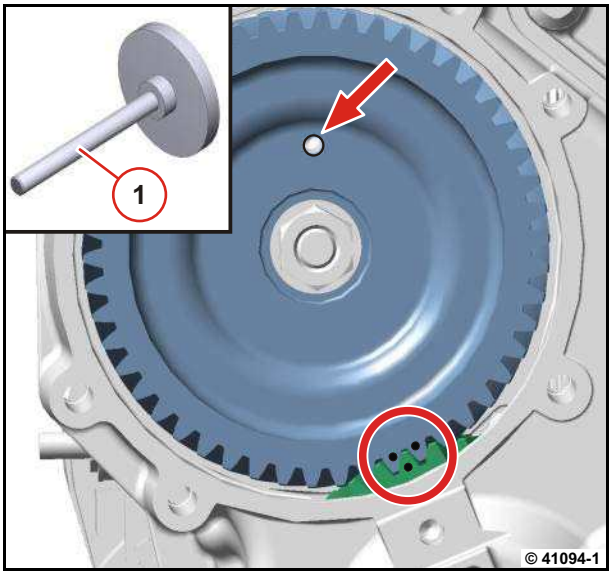

- Loosen blocking screw (1).
- Push locking ring (2) towards larger opening.

The blocking screw can now be screwed in further.

- Tighten blocking screw (1).

The fuel injector shaft is blocked.

Attention!
Pay attention to perfect fit of the blocking screw and locking plate.

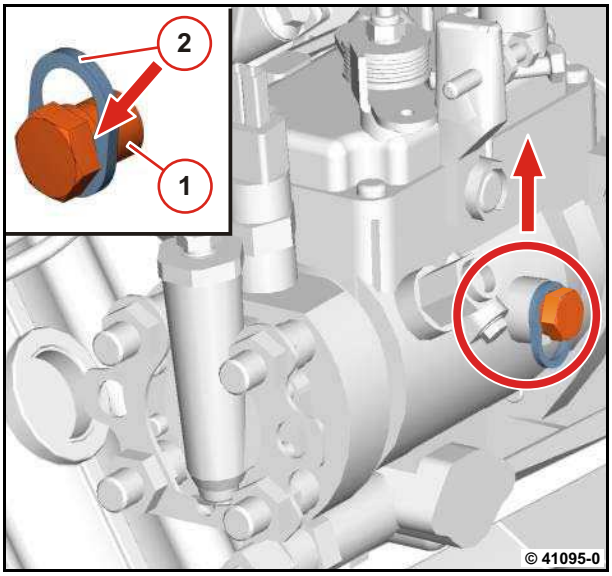

- Unscrew nut (1).
- Remove washer (2).
- Remove measuring pin (3).
- Pull off fuel injector toothed wheel (4).

Use suitable puller if necessary.

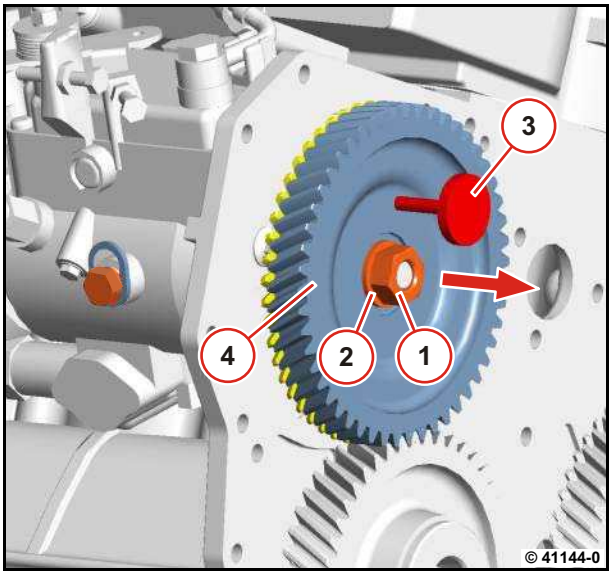

- Disconnect cables.
- Unscrew screws (1).
- Remove fuel injector pump(2).

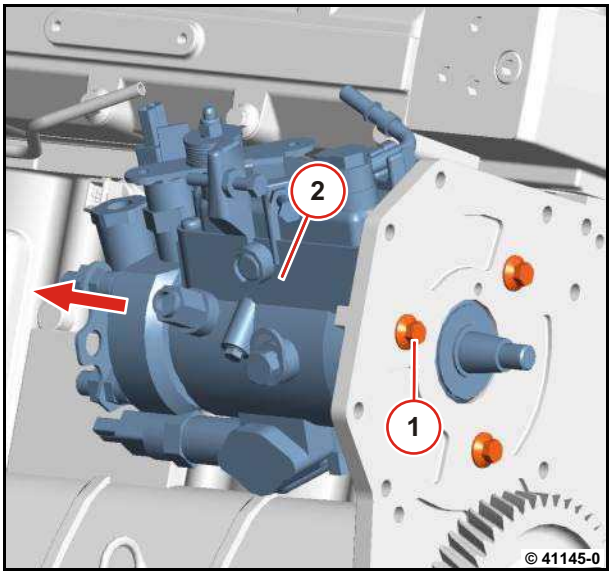

Installing the fuel injector pump

- Mount fuel injector pump (2).
- Tighten screws (1).

21 Nm

Attention!
The blocking screw may not be loosened.

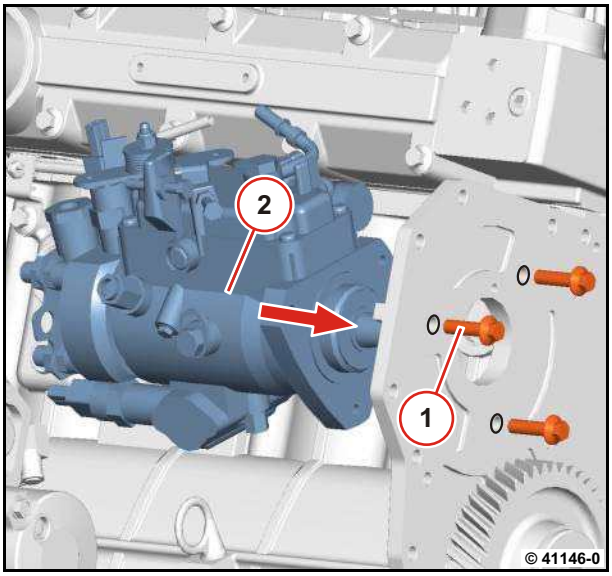

- Push fuel injector toothed wheel (4) onto fuel injector shaft.

Attention!
The marks of the fuel injector toothed wheels and the idler gear must be in line.

- Push the measuring pin (3) through the marking hole into the crankcase.
- Mount washer (2).
- Mount nut (1).
- Tighten nut (1).

10 Nm

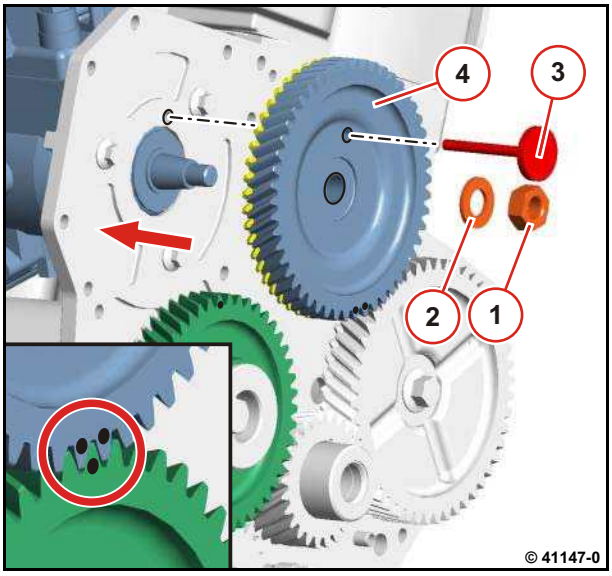

- Loosen blocking screw (1).
- Push locking ring (2) towards smaller opening.

Attention!
Loosening the blocking screw releases the blocking of the fuel injector shaft.
Never start the engine with the fuel injector shaft blocked!

- Tighten blocking screw.

10 Nm

- Tighten nut of fuel injector toothed wheel.

81 Nm

- Remove measuring pin.

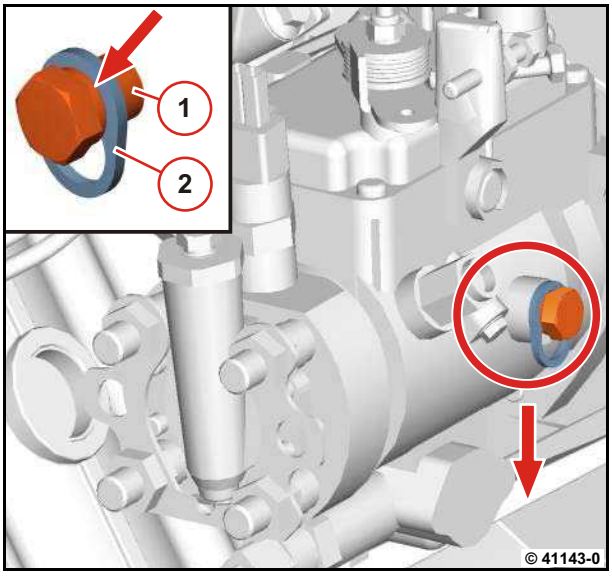

- Mount gearcase cover.

W 04-04-09

- Mount high pressure pipes.
- Screw on union nuts.

Attention!
Install injection pipes without tension.

- Tighten union nuts.

28 Nm

- Position pipe clip.
- Tighten screw.

9 Nm

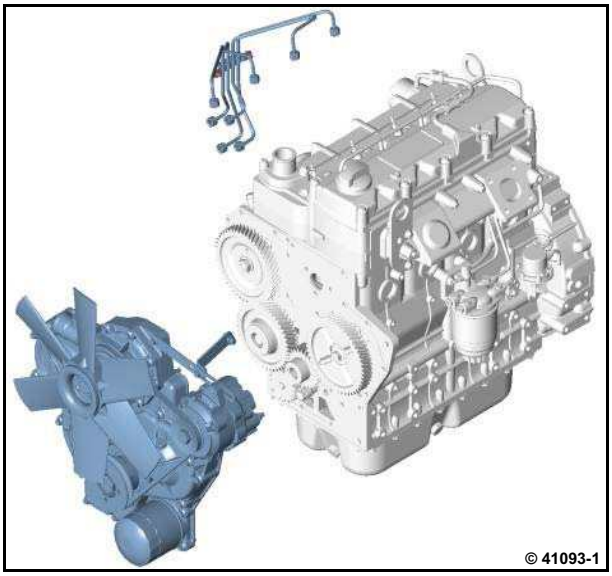

Removing and installing the fuel injectors

Commercial available tools

Attention!
Ensure utmost cleanliness when working on the fuel system.
Carefully clean the area around the affected parts. Blow damp areas dry with compressed air.
Observe the safety regulations and national specifications for handling fuels.
Close all connections immediately after opening with new, clean plugs/caps.
Do not remove plugs/caps until immediately before assembling.
Collect leaking operating fluids in suitable vessels and dispose of according to regulations.

Removing the fuel injectors

- Pull the pipes (2) off the fuel injectors.
- Loosen pipe clip.
- Unscrew union nuts of the high pressure pipes.
- Remove all injection lines (1).

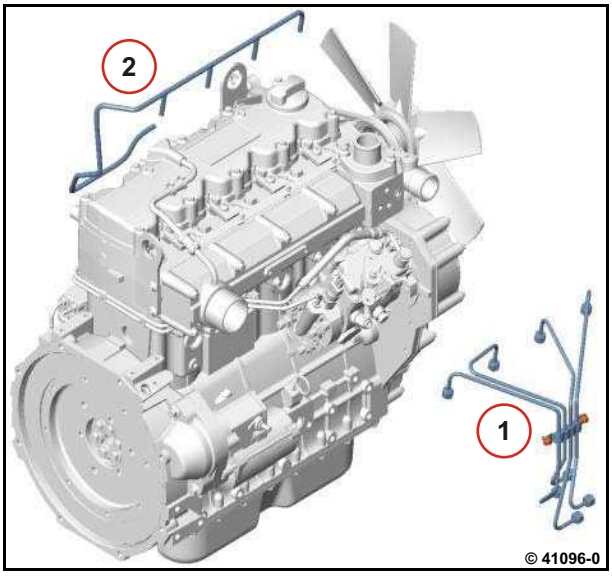

- Unscrew screw (1).
- Remove clamping shoe (2).
- Pull out fuel injector (3).
- Remove sealing ring (4).

Attention!
Do not damage the sealing surfaces.

- Visually inspect sealing surface.

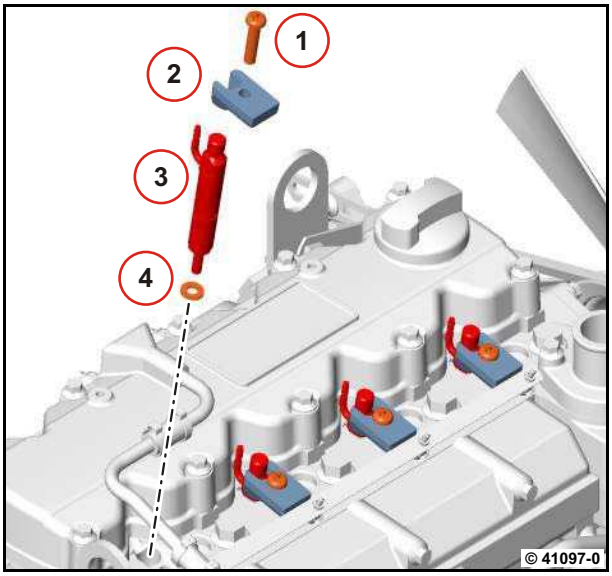

Installing the fuel injector

- Mount new sealing ring (1) on fuel injector.

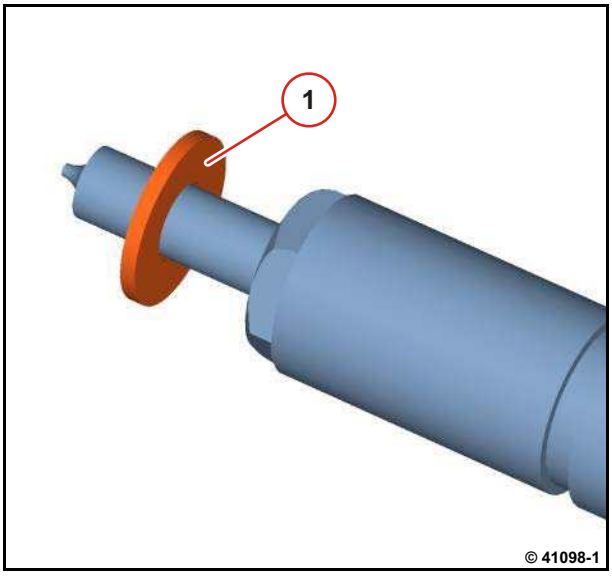

- Insert fuel injector (3) in cylinder head.

The fuel leakage connection faces the exhaust manifold.

- Mount clamping shoe (2).

Note installation position of the clamping shoe.

- Tighten screw (1).

27 Nm

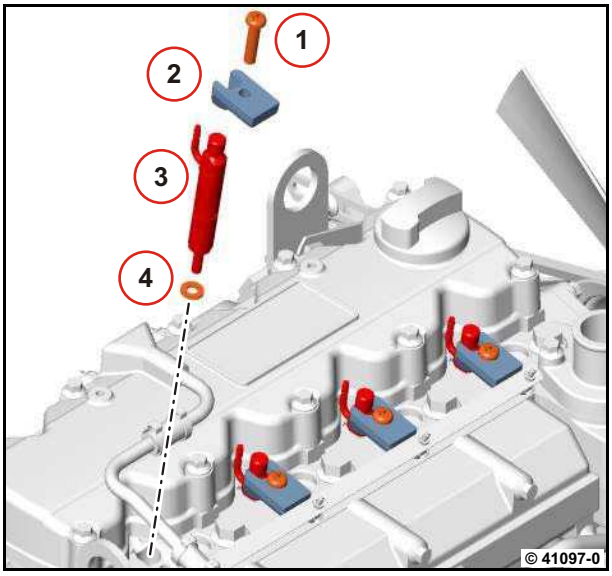

- Mount high presssure pipes (1).
- Screw on union nuts.

Attention!
Install injection pipes without tension.

- Tighten union nuts.

28 Nm

- Push the pipes (2) onto the fuel injectors.
- Position pipe clip.
- Tighten screw.

9 Nm

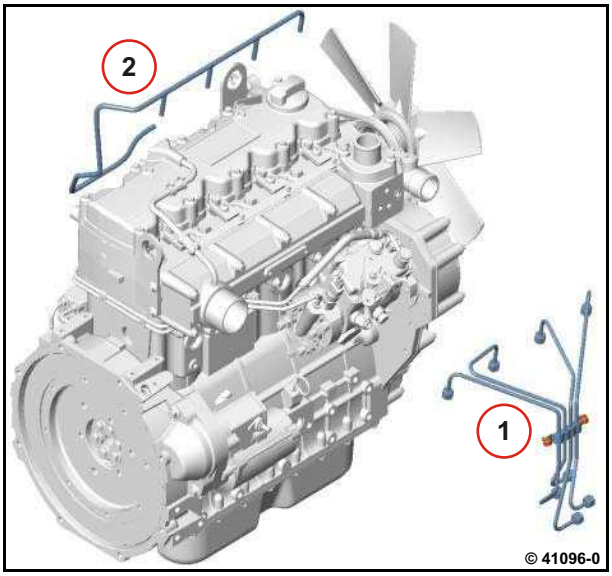

Removing and installing the fuel filter console

Commercial available tools

Special tools:
– Special wrench 170050

Attention!
Ensure utmost cleanliness when working on the fuel system.
Carefully clean the area around the affected parts. Blow damp areas dry with compressed air.
Observe the safety regulations and national specifications for handling fuels.
Close all connections immediately after opening with new, clean plugs/caps.
Do not remove plugs/caps until immediately before assembling.
Collect leaking operating fluids in suitable vessels and dispose of according to regulations.

Removing the fuel filter console

- Loosen water drainage screw (1).

Collect draining water and dispose of according to regulations.

- Unscrew fuel filter (2) with special wrench.

Collect draining fuel and dispose of according to regulations.

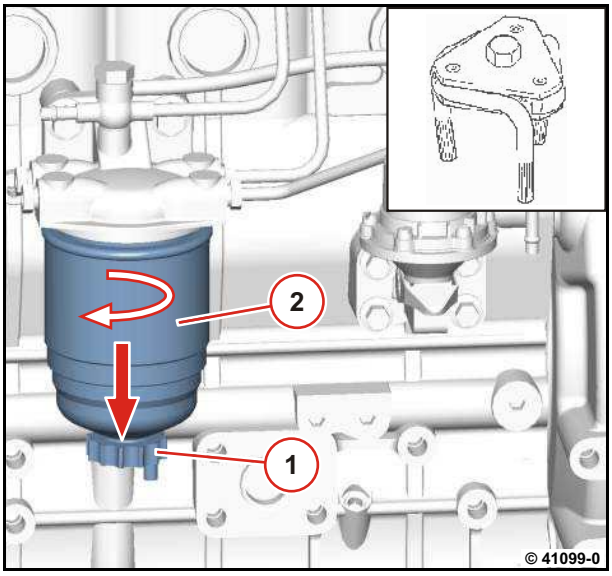

- Unscrew hollow screw (1).
- Remove sealing rings.
- Unscrew fuel pipes (2).
- Pull off fuel return line.

Collect draining fuel and dispose of according to regulations.

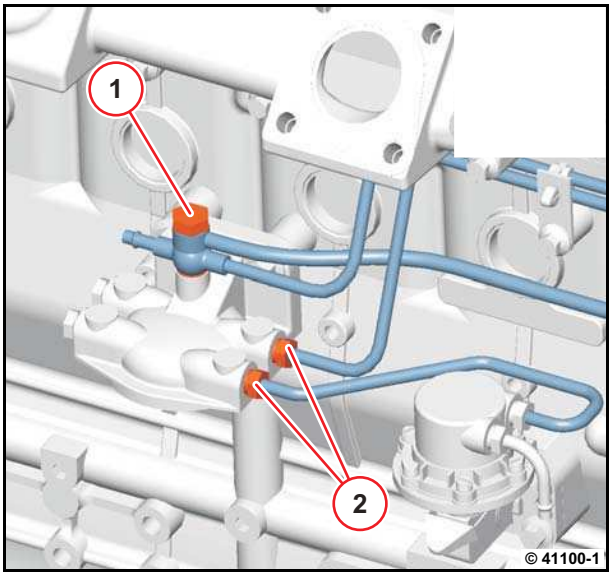

- Unscrew screws (1).
- Remove fuel filter console (2).
- Visually inspect the components.

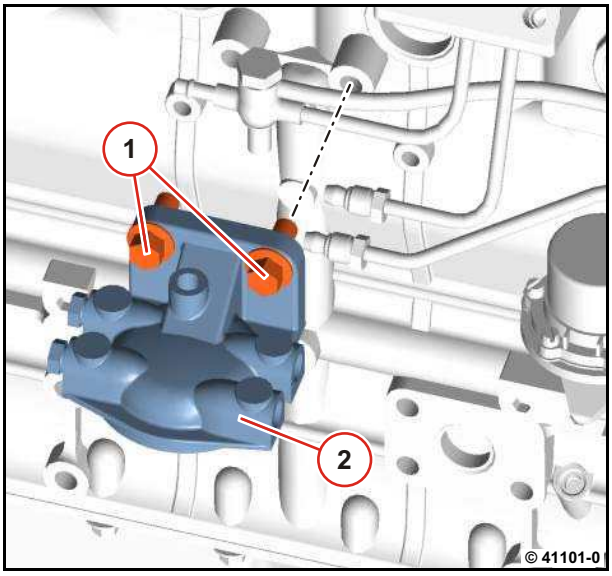

Installing the fuel filter console

- Install the fuel filter console (2).
- Tighten screws (1).

  41 Nm

- Clean sealing surfaces.

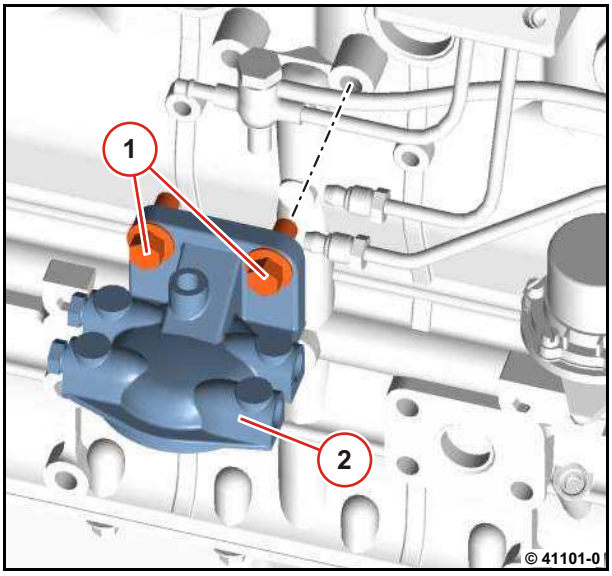

- Mount fuel pipes.
- Tighten hollow screw (1) with new sealing rings.

  21 Nm

- Tighten fuel lines (2).

  21 Nm

- Mount fuel return line.

Check fuel lines and renew if necessary.
Note assignment and installation position of the fuel lines.

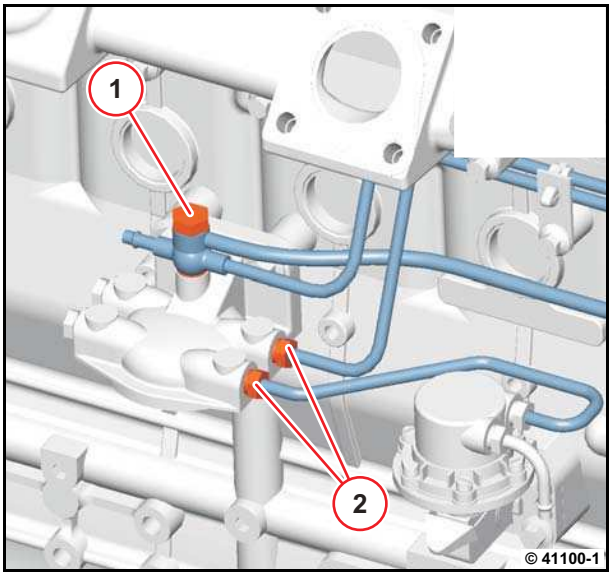

- Lightly oil gasket on new fuel filter.
- Screw on fuel filter by hand.

The seal must fit evenly.

- Tighten the fuel filter by another half turn (tightening torque see fuel filter print).

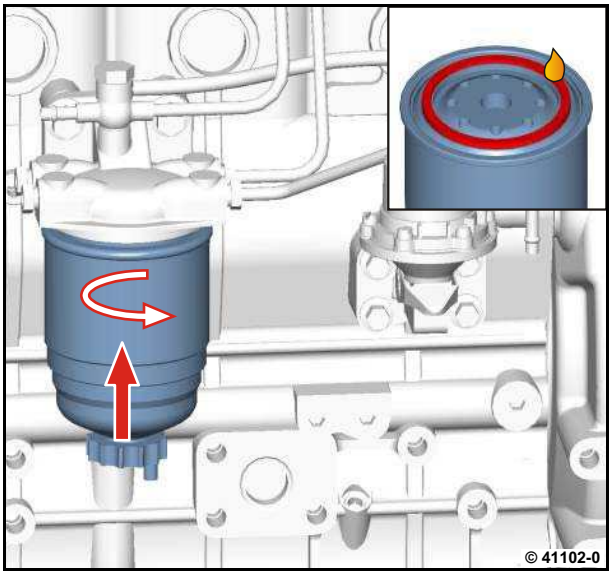

Removing and installing the fuel supply pump

Commercial available tools

Attention!
Ensure utmost cleanliness when working on the fuel system.
Carefully clean the area around the affected parts. Blow damp areas dry with compressed air.
Observe the safety regulations and national specifications for handling fuels.
Close all connections immediately after opening with new, clean plugs/caps.
Do not remove plugs/caps until immediately before assembling.
Collect leaking operating fluids in suitable vessels and dispose of according to regulations.

Removing the fuel supply pump

- Unscrew fuel line.

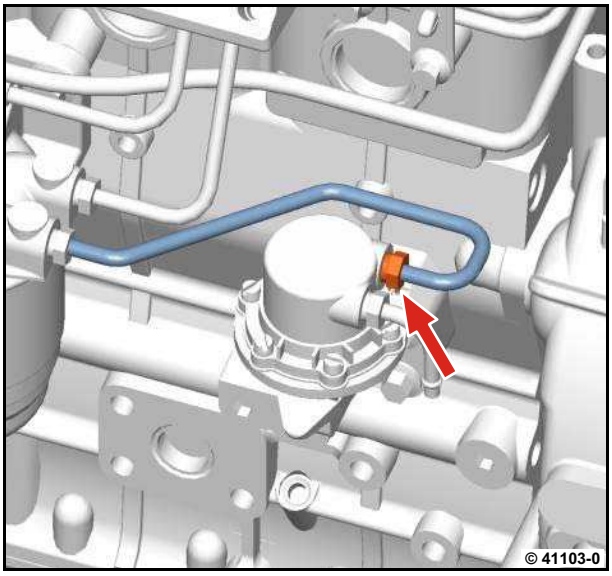

- Unscrew screws (1).
- Remove fuel supply pump (2).
- Remove O-ring (3).
- Remove pump plunger (4).
- Visually inspect the components.

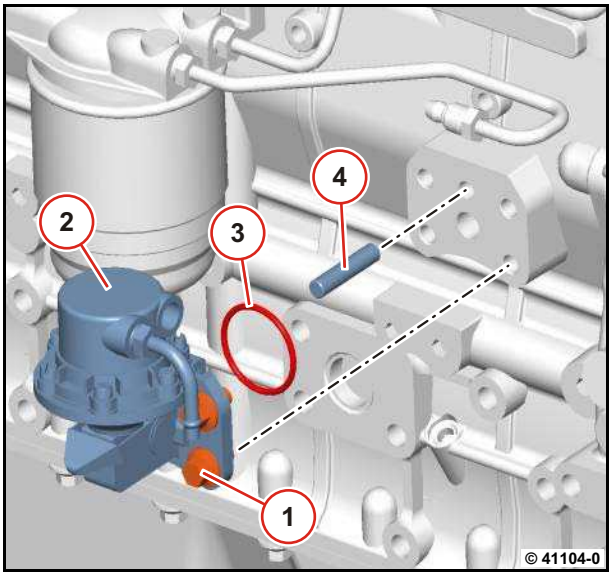

- Clean sealing surfaces.

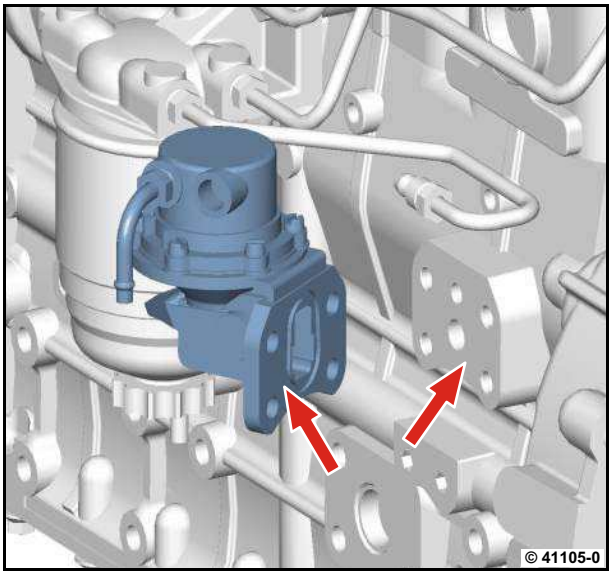

Installing the fuel supply pump

- Push in pump plunger (4).
- Turn crankshaft.

The pump plunger must touch the base circle of the camshaft.

- Mount new O-ring (3).
- Mount fuel supply pump (2).
- Tighten screws (1).
- Tighten screws (1).

27 Nm

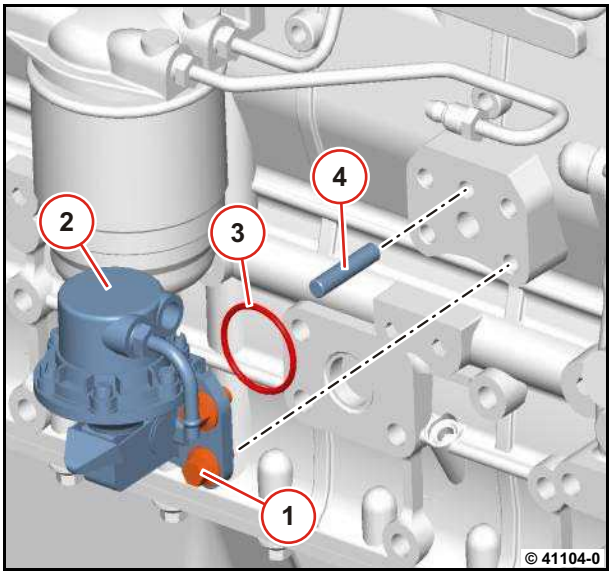

- Mount fuel pipe.
- Tighten screw.

15 Nm

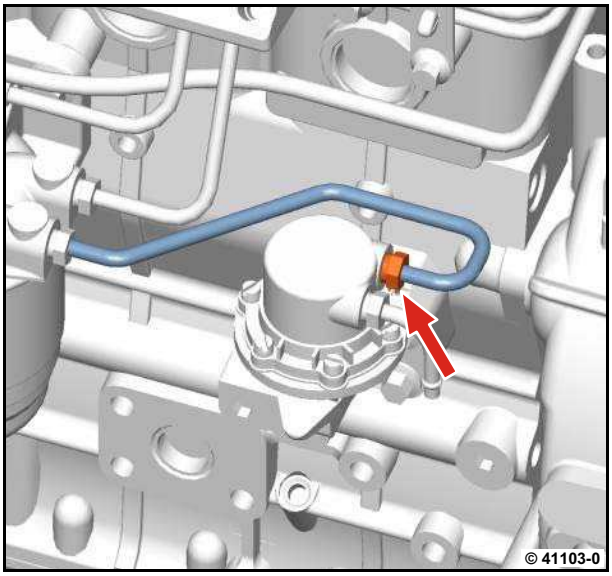

Removing and installing the lubricating oil pump

Commercial available tools

– W 02-04-01
– W 04-04-09
– W 08-04-06

Collect leaking operating substances in suitable vessels and dispose of according to regulations.

Removing the lubricating oil pump

- Remove gearcase cover (1).

  W 04-04-09

- Remove idler gear (2).

  W 02-04-01

- Remove oil suction pipe (3).

  W 08-04-06

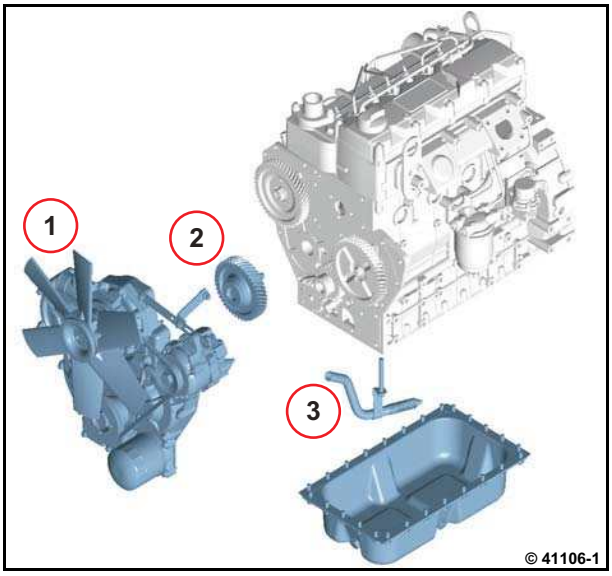

- Unscrew screws (1).
- Remove lubricating oil pump (2).
- Visually inspect the components.

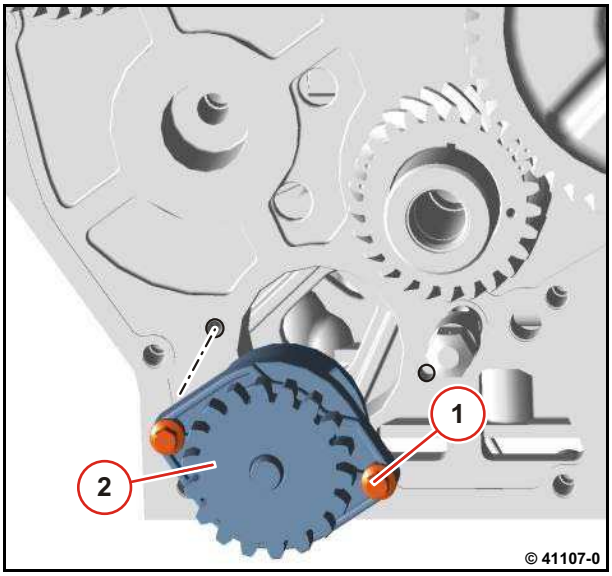

Installing the lubricating oil pump

- Insert lubricating oil pump (2).
- Tighten screws (1).
  - Step 1:
    4 Nm
  - Step 2:
    9 Nm

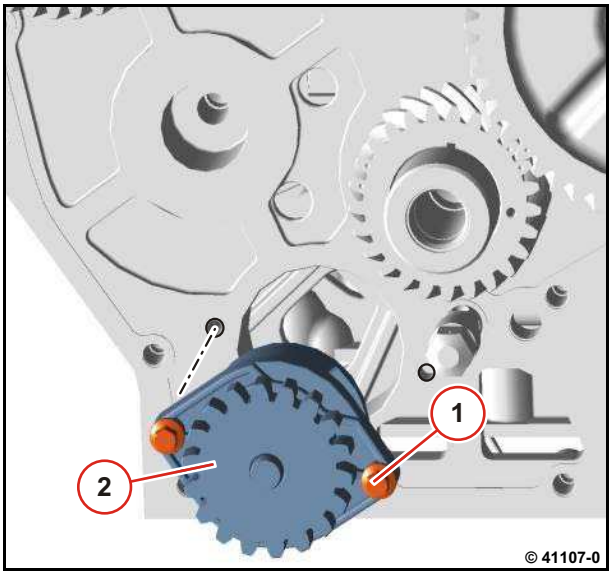

- Install oil suction pipe (3).
  W 08-04-06
- Install idler gear (2).
  W 02-04-01
- Mount gearcase cover (1).
  W 04-04-09

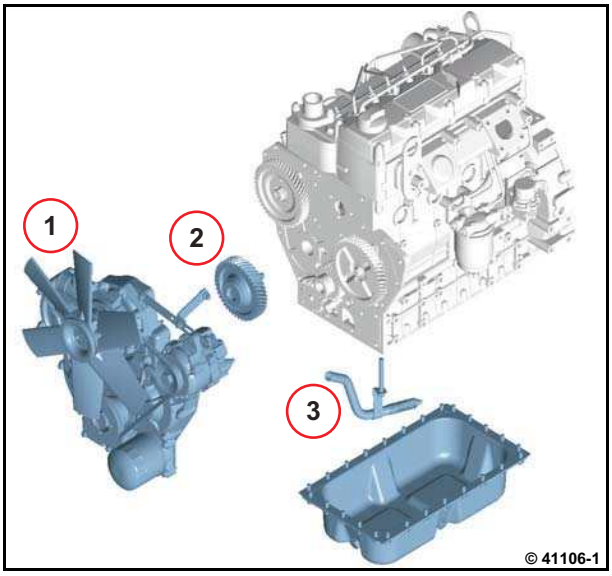

Removing and installing the oil suction pipe

Commercial available tools

– W 08-04-07

Removing the oil suction pipe

- Remove lubricating oil pan.

  W 08-04-07

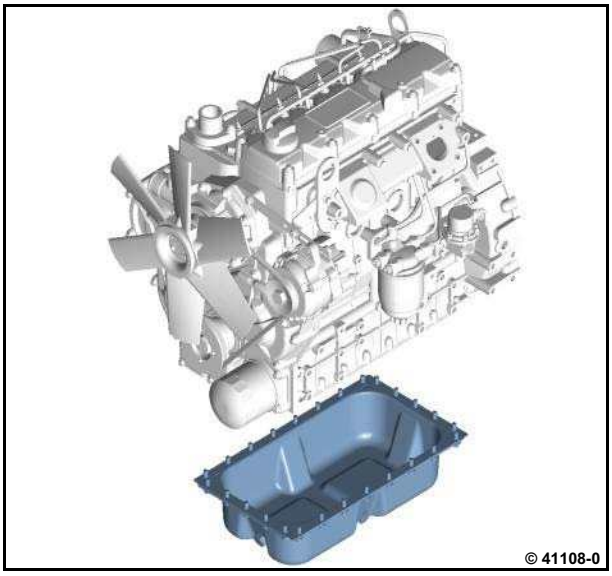

- Unscrew screw (1).
- Remove oil suction pipe (2).
- Remove O-ring (3).

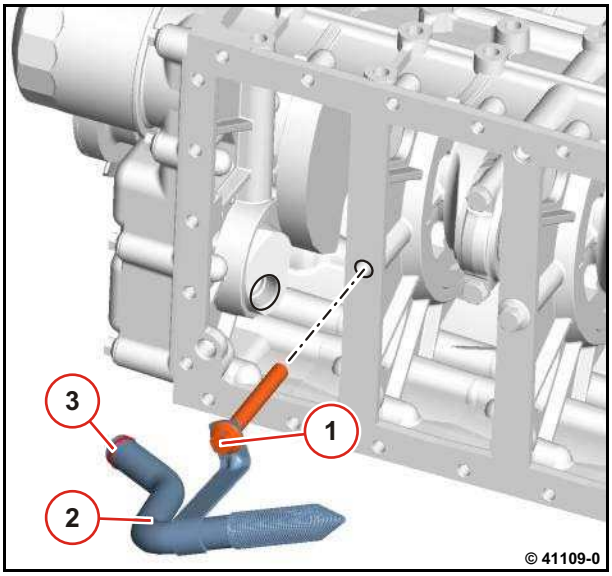

Installing the oil suction pipe.

- Insert new O-ring (3).
- Lightly oil O-ring (3).
- Mount oil suction pipe (2).
- Tighten screw (1).

41 Nm

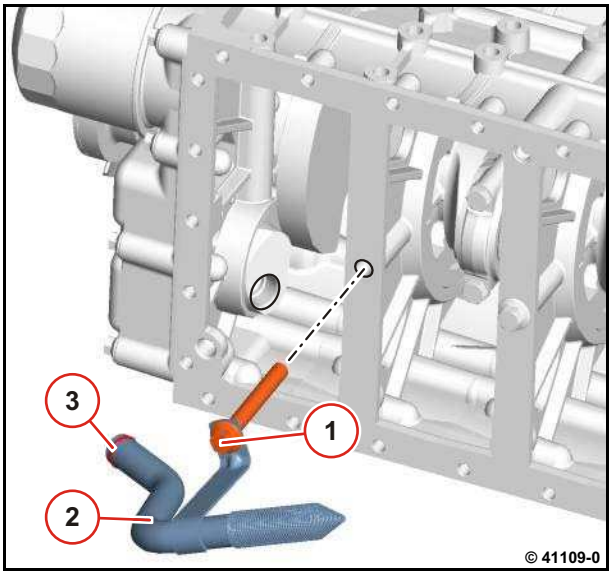

- Install lubricating oil pan.

W 08-04-07

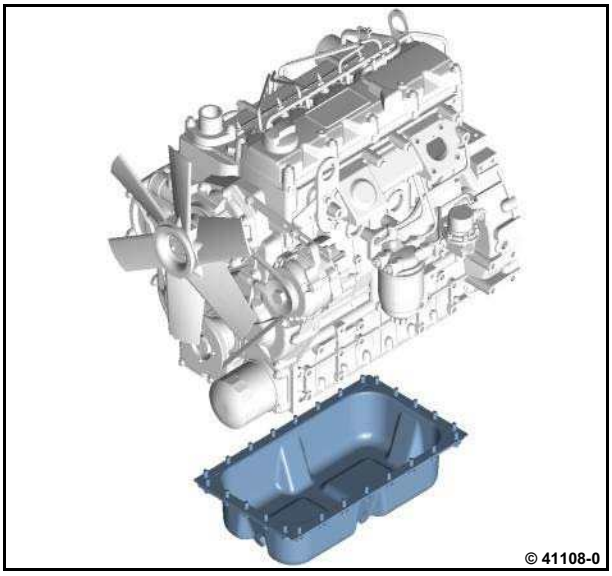

Removing and installing the lubricating oil pan

Commercial available tools

Collect leaking operating substances in suitable vessels and dispose of according to regulations.

Observe the appropriate operating instructions for emptying and filling the engine.

Removing the lubricating oil pan

- Unscrew drain plugs (1).

Collect the engine oil and dispose of according to regulations.

- Insert new sealing ring.
- Tighten drain plugs (1).

39 Nm

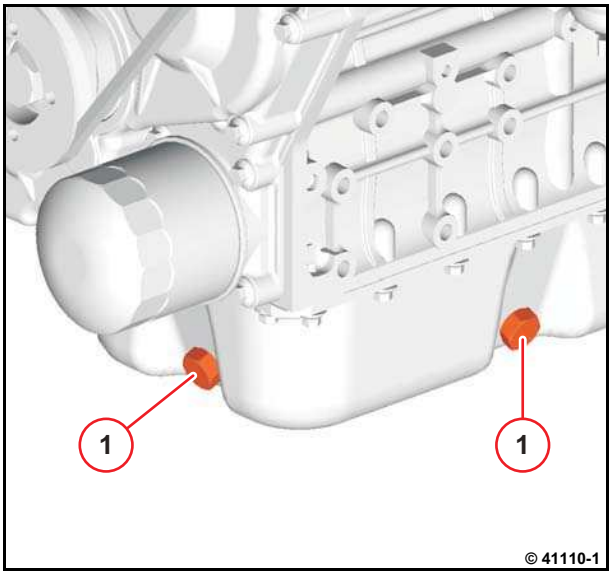

- Unscrew all screws (1).
- Remove strips (2).
- Remove strips (3).
- Remove lubricating oil pan.
- Remove gasket.
- Clean sealing surfaces.

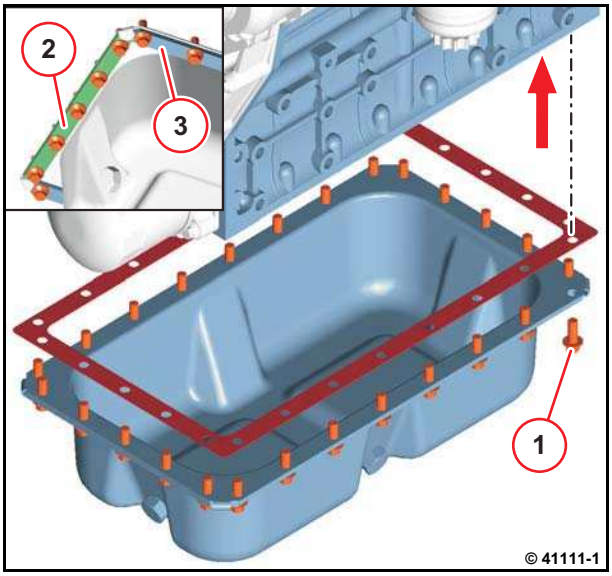

Installing the lubricating oil pan

- Grease lubricating oil pan (arrows).
- Mount new gasket.
- Mount lubricating oil pan.

Do not move the gasket when mounting the lubricating oil pan.

- Tighten screws (arrows).
- Mount strips (1).
- Fasten all screws.
- Tighten screws.

32 Nm

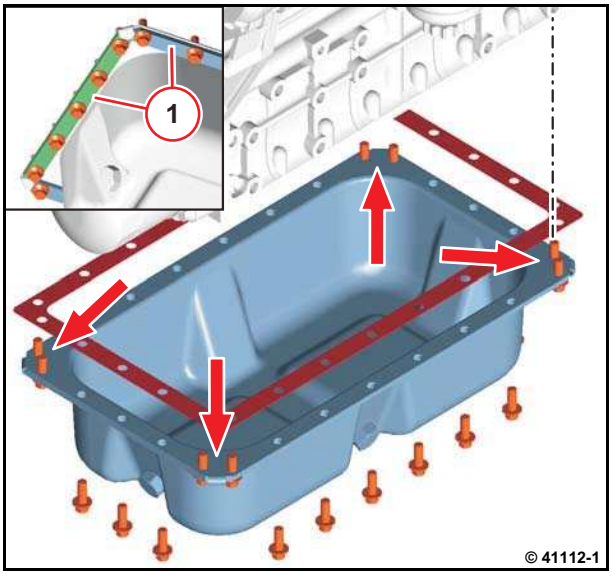

- Fill engine oil according to operating instructions.

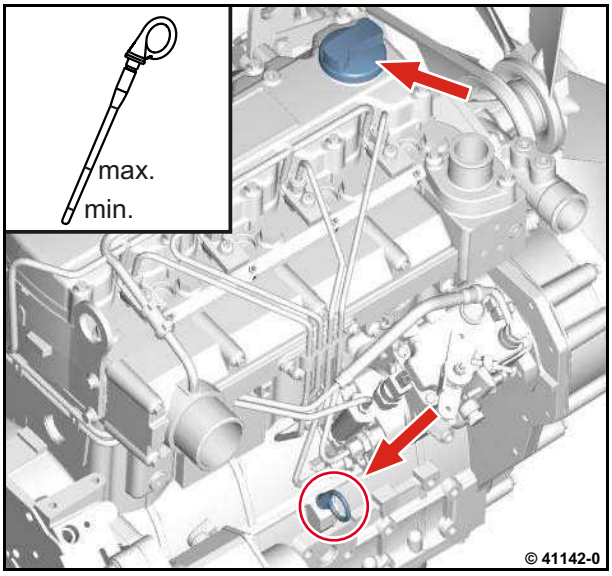

Removing and installing the oil pressure regulating valve

Commercial available tools

– W 04-04-09
– W 12-02-02

Collect leaking operating substances in suitable vessels and dispose of according to regulations.

Removing the oil pressure regulating valve

- Remove V-belt pulley.

  W 12-02-02

- Remove gearcase cover.

  W 04-04-09

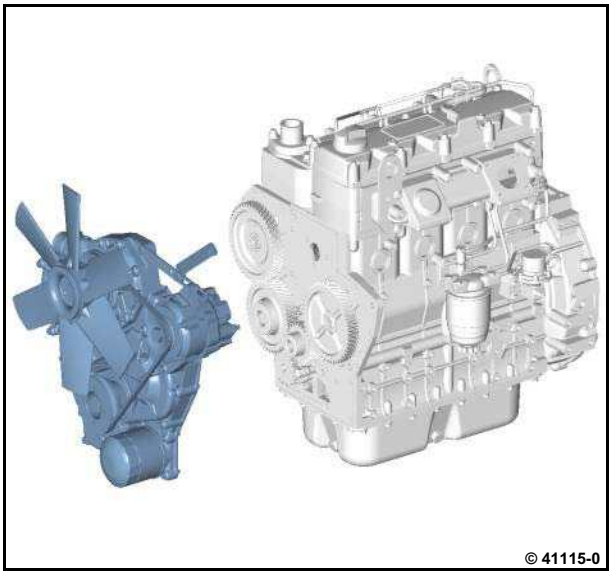

- Unscrew oil pressure regulating valve.
- Visually inspect the component.

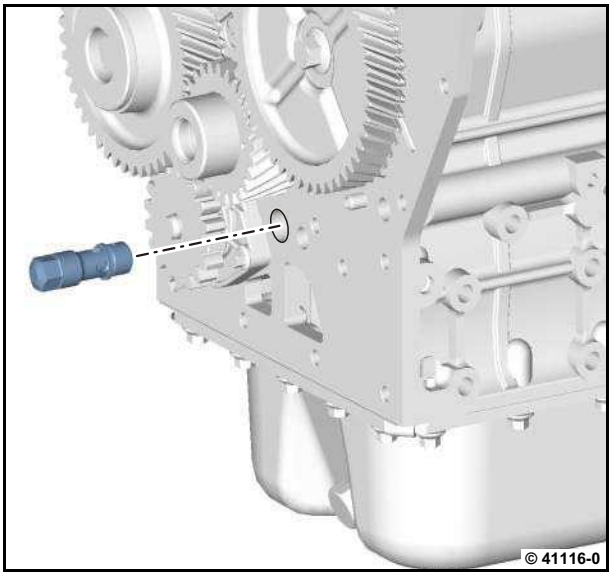

Installing the oil pressure regulating valve

- Insert oil pressure regulating valve.
- Tighten oil pressure regulating valve.

  27 Nm

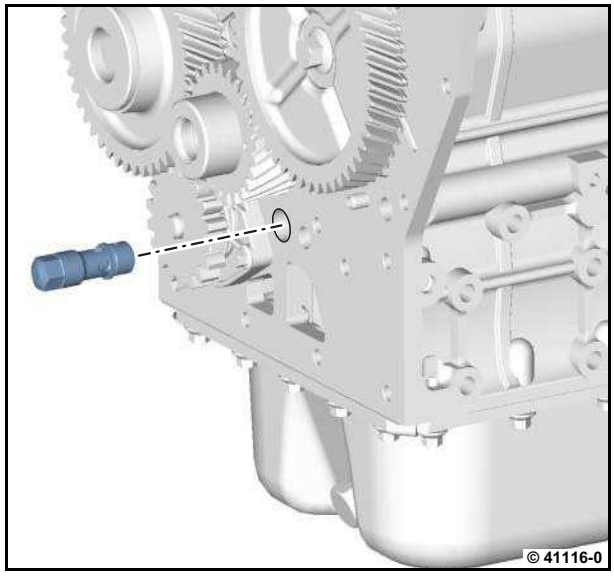

- Mount gearcase cover.

  W 04-04-09

- Install V-belt pulley.

  W 12-02-02

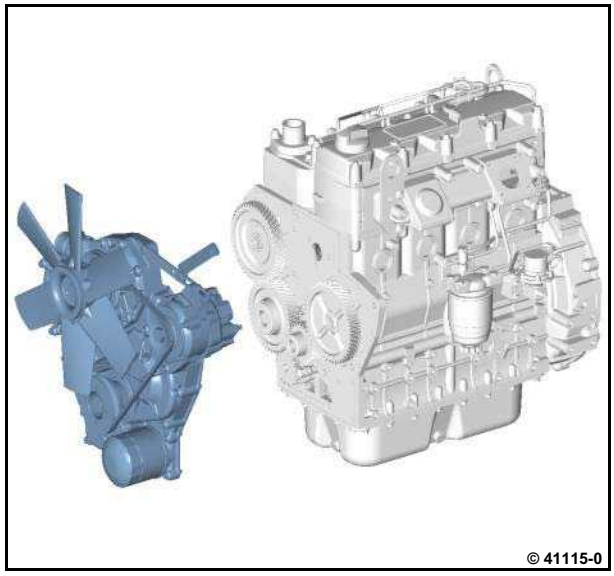

Removing and installing the coolant pump

Commercial available tools

– W 12-02-02

Collect leaking operating substances in suitable vessels and dispose of according to regulations.
The appropriate documentation of the vehicle/equipment manufacturer should be observed for emptying and filling the cooling system.

Removing the coolant pump

- Remove fan impeller.
- Remove V-belt pulley.

  W 12-02-02

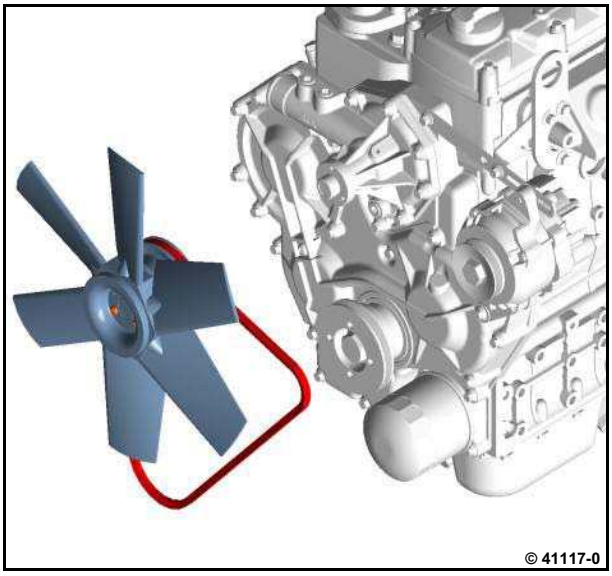

- Unscrew screws (1).
- Remove coolant pump (2).
- Remove gasket (3).
- Clean sealing surfaces.

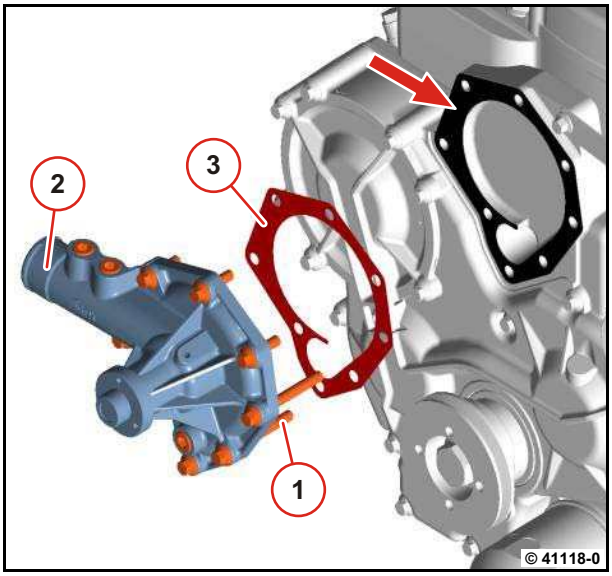

Installing the coolant pump

- Mount new gasket (3).
- Mount coolant pump (2).
- Tighten screws (1).

  27 Nm

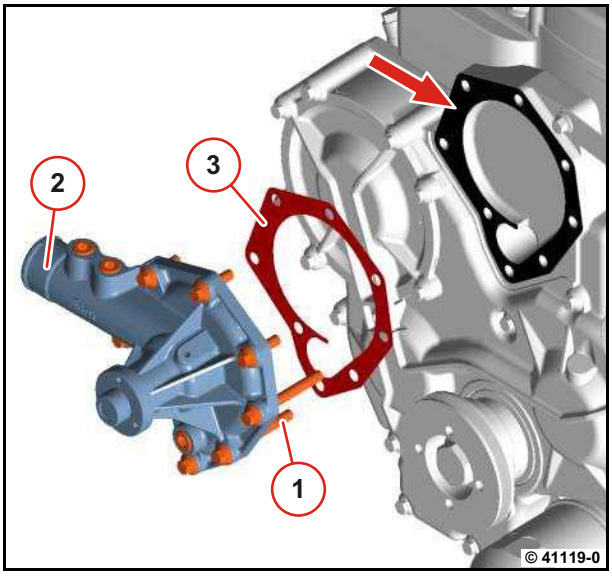

- Install V-belt pulley.

  W 12-02-02
- Install V-belt.
- Install fan impeller.

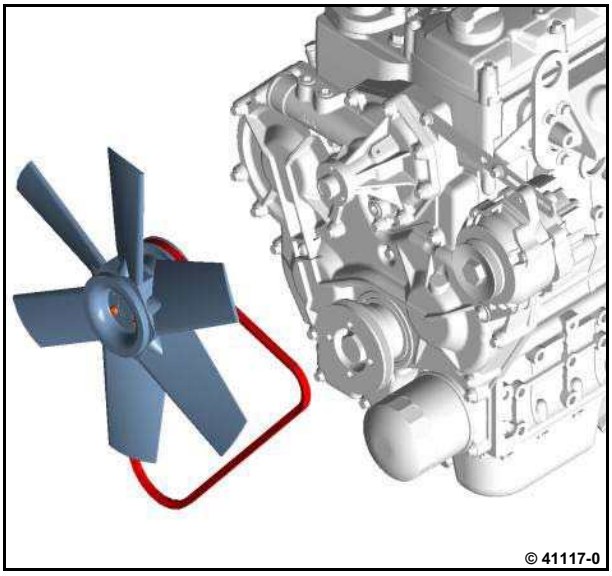

Checking the coolant thermostat when uninstalled

Commercial available tools

– W 09-08-02

Checking the coolant thermostat

- Remove the coolant thermostat.

  W 09-08-02

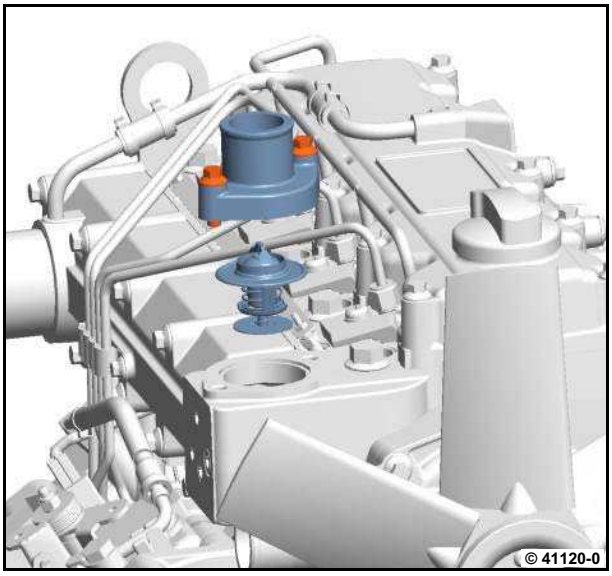

- Measure dimension "a" on the coolant thermostat.

  „a“ = start of stroke at 86 °C - 90 °C

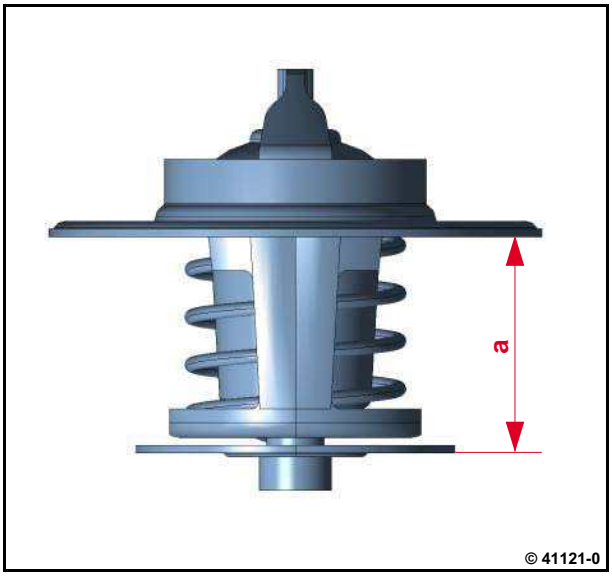

- Heat up the coolant thermostat in the water bath.

In order to determine the exact beginning of opening, the temperature should be measured as close as possible to the thermostat without touching it.

The water should be continuously stirred for an even temperature distribution. The temperature rise should not take place faster than 1°C/min. Otherwise the beginning of opening will be delayed accordingly.

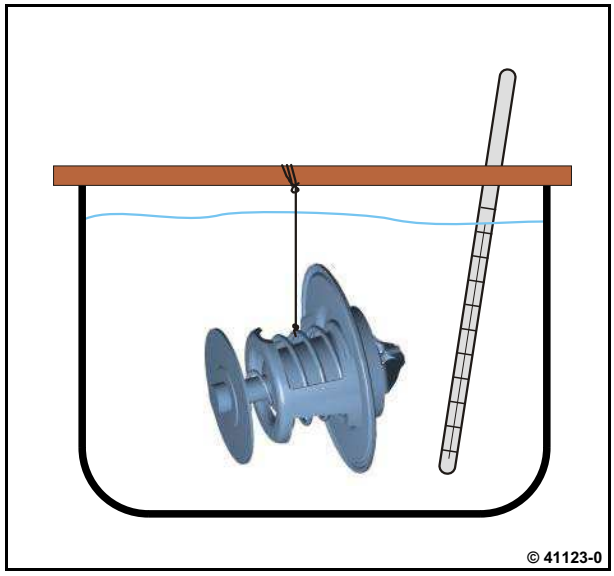

- Measure dimension "b" on the coolant thermostat.

„b“ = end of stroke at 99 °C - 102 °C

Stroke distance at given temperature at least 8 mm.

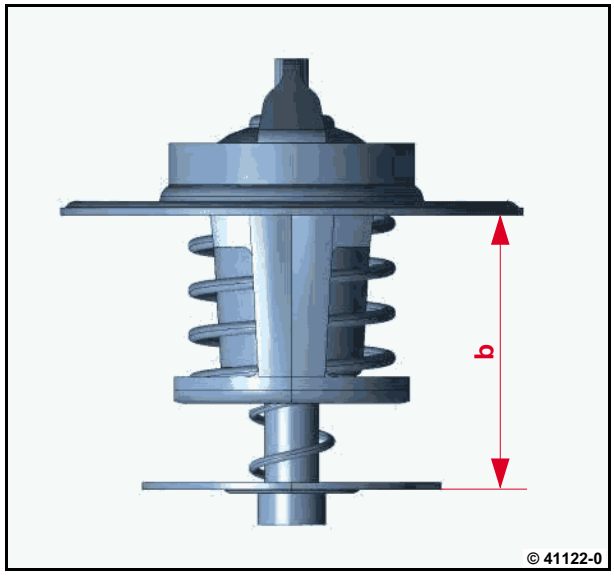

- Install the coolant thermostat.

W 09-08-02

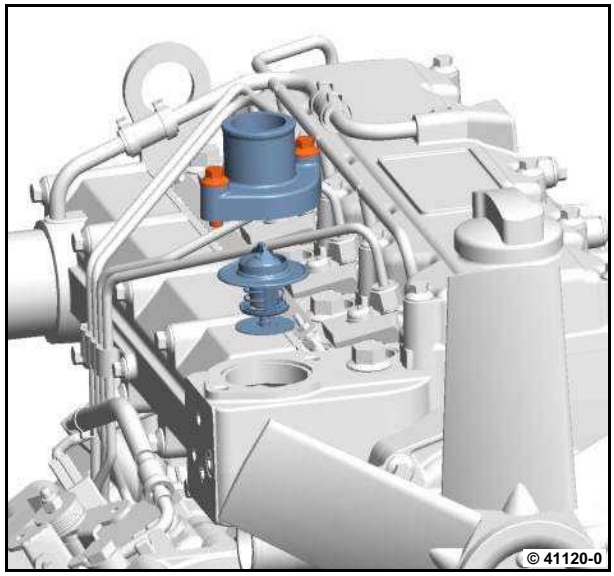

Removing and installing the coolant thermostat

Commercial available tools

– W 09-08-01

Collect leaking operating substances in suitable vessels and dispose of according to regulations.
The appropriate documentation of the vehicle/equipment manufacturer should be observed for emptying and filling the cooling system.

Removing the coolant thermostat

- Unscrew screws (1).
- Remove outlet nozzle (2).
- Remove coolant thermostat (3).
- Remove O-ring.
- Visually inspect the components.
- Check coolant thermostat.

W 09-08-01

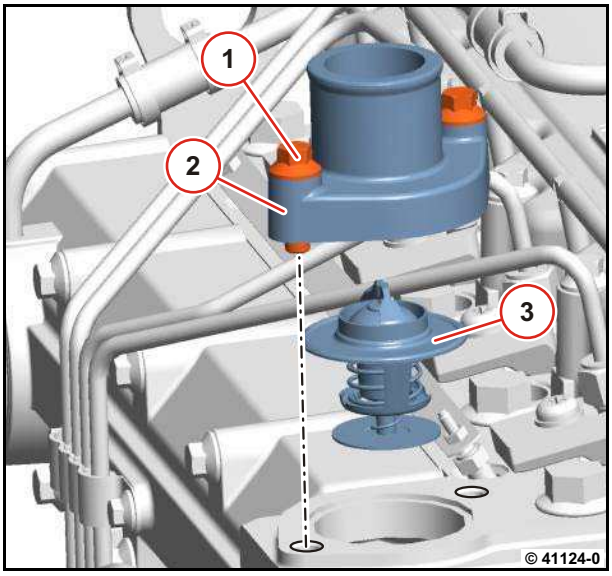

Installing the coolant thermostat

- Clean sealing surfaces.
- Insert coolant thermostat (3).
- Mount outlet nozzle (2).
- Insert new O-ring (4).
- Tighten screws (2).

27 Nm

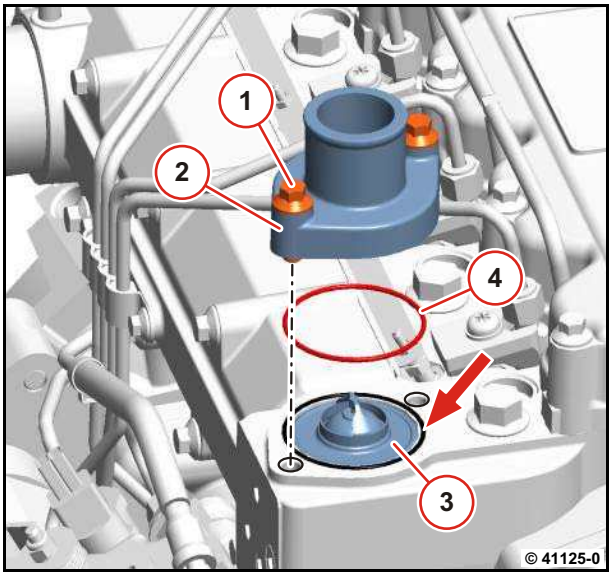

Removing and installing the V-belt, V-belt pulley

Commercial available tools:
– V-belt tension measuring device 8115

Attention!
Only test / tighten / renew V-belts when the engine is not running.

The V-belt tension of new V-belts must be checked after they have been running for 15 minutes.

Removing the V-belt, V-belt pulley

- Loosen screw (1).
- Loosen screw (2).
- Press generator in direction of arrow.
- Remove V-belt.

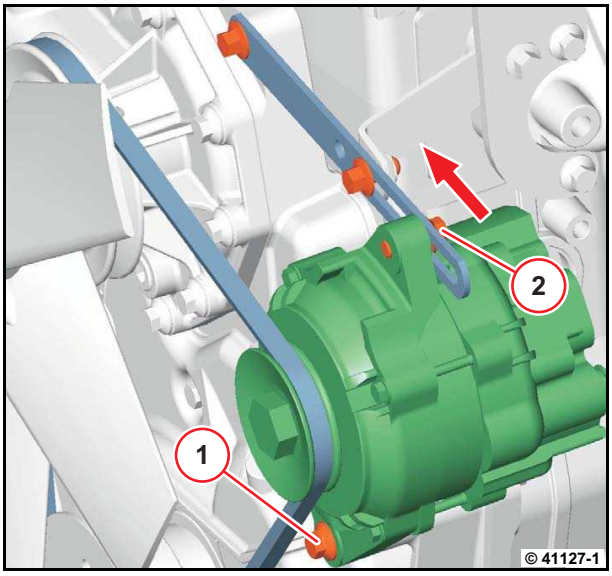

- Unscrew screw (1).
- Remove V-belt pulley (2).

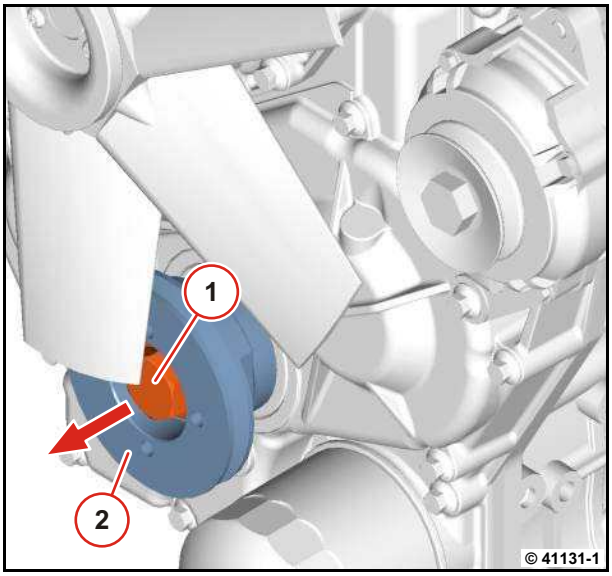

Installing the V-belt, V-belt pulley

- Mount V-belt pulley (1).
- Tighten screw (2).

  300 Nm

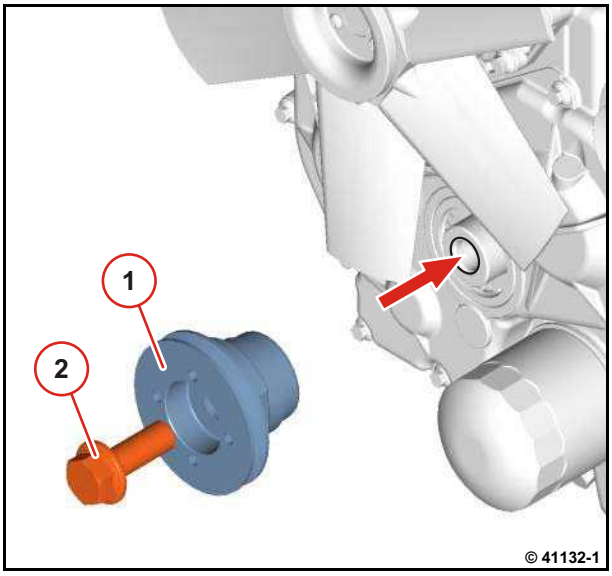

- Fit V-belt.
- Fasten screw (1).
- Press generator in direction of arrow.
- Tighten screw (1).

  21 Nm

- Tighten screw (2).

  22 Nm

- Check V-belt tension.

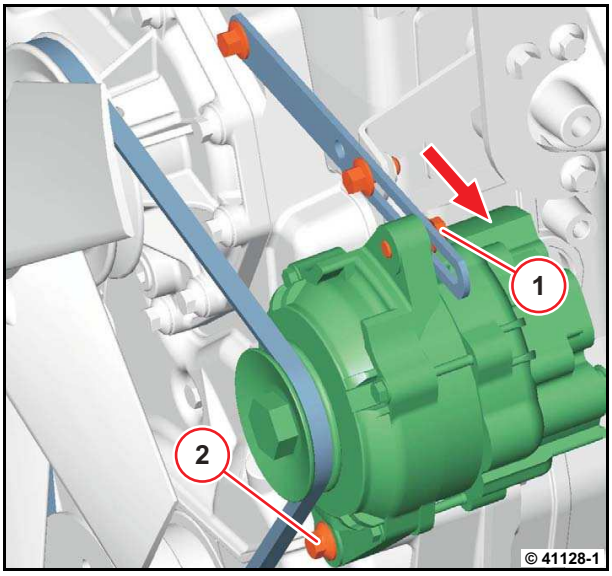

Check V-belt tension with V-belt tension measuring device

- Lower indicator arm (1) into V-belt tension measuring device.
- Mount V-belt tension measuring device on V-belt.

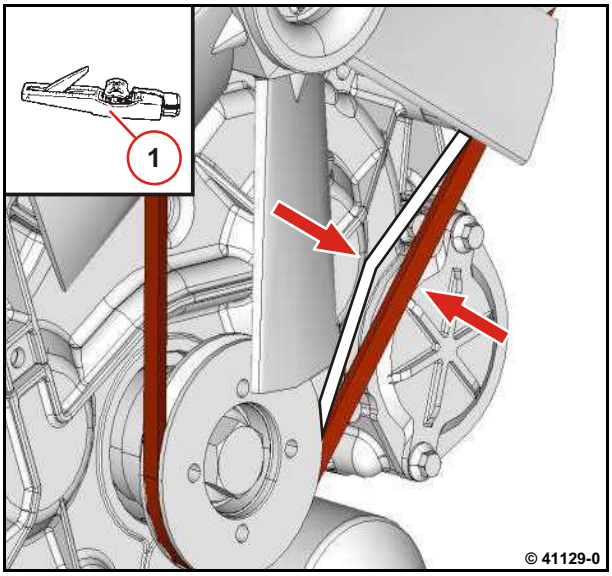

- Press the V-belt measuring device against the V-belt with the button (1) until you hear it click.
- Read the measured value at the point of intersection of the indicator arm and the scale (arrows).

P12 11

P12 21

Note different units on the scale.

- If the nominal value is not reached, the tensioning process must be repeated.

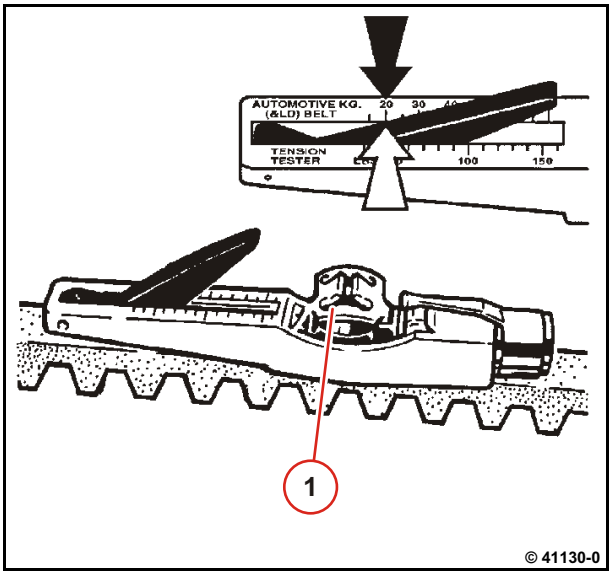

Removing and installing the flywheel

Commercial available tools

Special tools:
– Fixing pin 144180

Removing the flywheel

- Fix flywheel with fixing pin (1).
- Unscrew all screws (arrow).
- Remove fixing pin (1).
- Remove flywheel.
- Visually inspect the components.

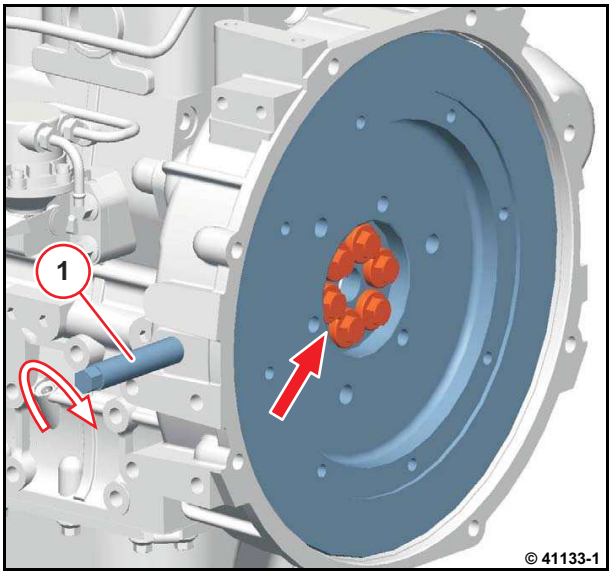

Installing the flywheel

- Mount flywheel.
- Fix flywheel with fixing pin (1).

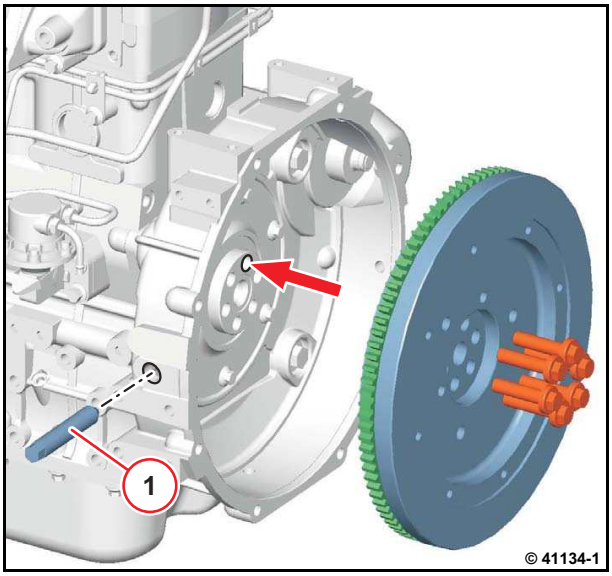

See graphic for tightening sequence.

- Tighten all screws.

  96 Nm

- Remove fixing pin (1).

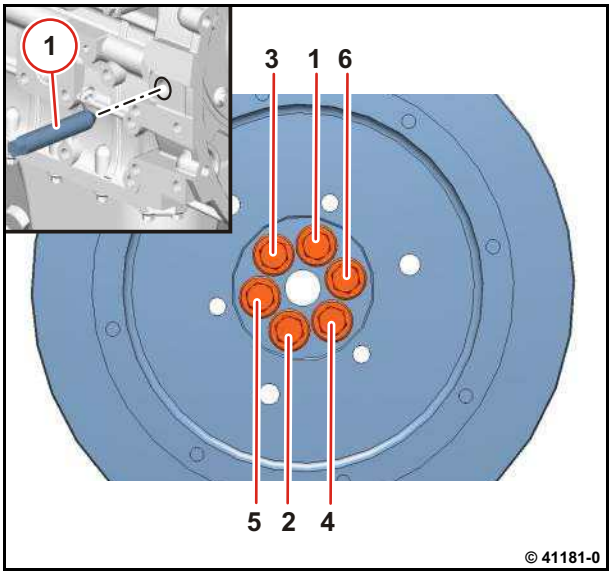

Removing and installing the generator

Commercial available tools:
– V-belt tension measuring device 8115

Attention!
Only test / tighten / renew V-belts when the engine is not running.

The V-belt tension of new V-belts must be checked after they have been running for 15 minutes.

Removing the generator

- Disconnect the battery's negative terminal.
- Remove cable from generator.

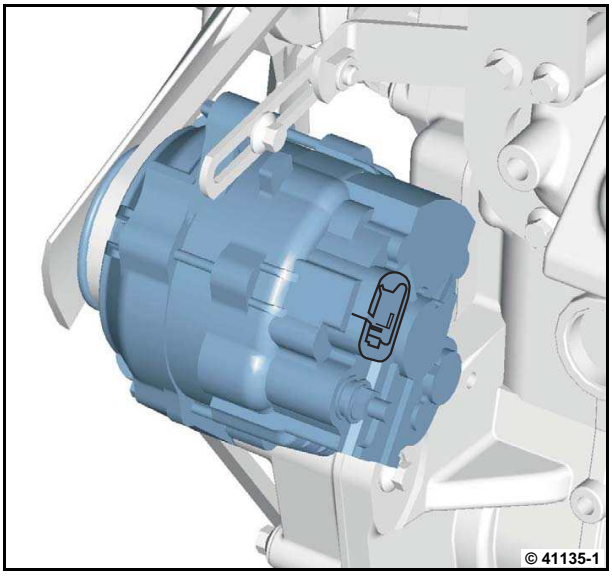

- Loosen screws (1).
- Unscrew screws (2).
- Press generator in direction of arrow.
- Remove V-belt.

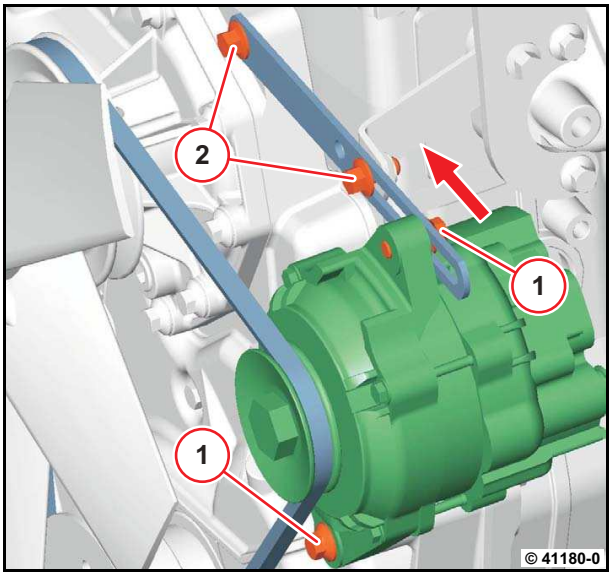

- Unscrew screw (1).
- Remove generator (2).
- Visually inspect the components.

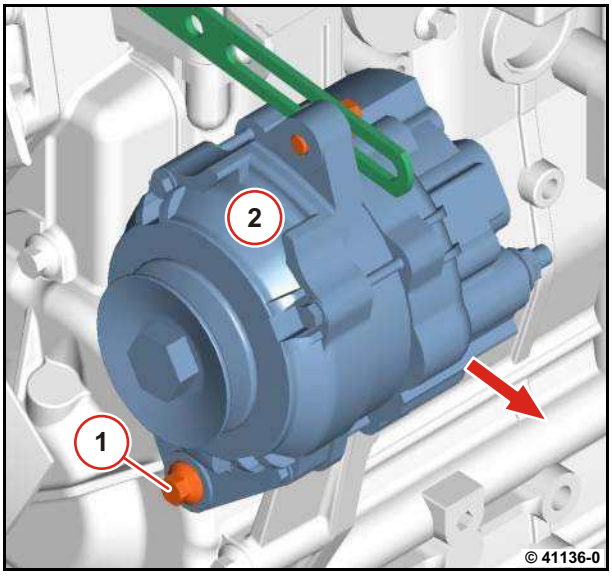

Installing the generator

- Mount generator.
- Mount V-belt.
- Tighten screws (1).
- Press generator in direction of arrow.

V-belt is clamped.

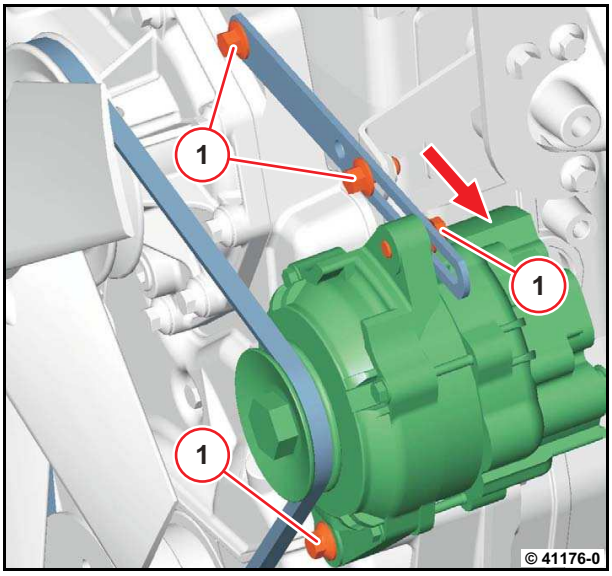

- Tighten screws (1).

  21 Nm
- Tighten screw (2).

  21 Nm
- Tighten screw (3).

  22 Nm
- Check V-belt tension.

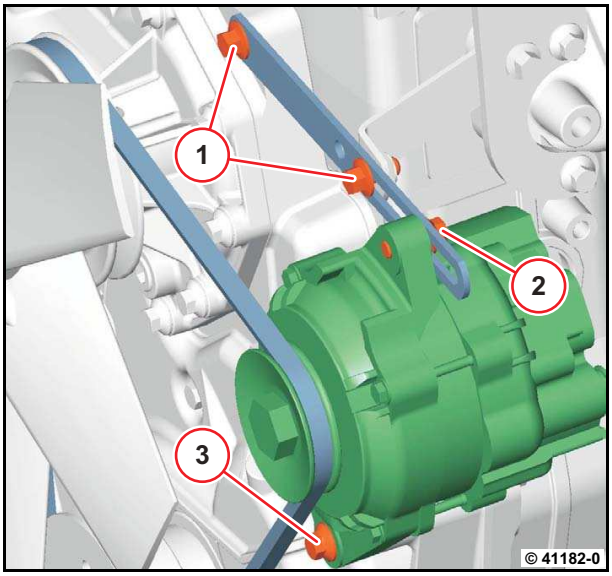

Check V-belt tension with V-belt tension measuring device

- Lower indicator arm (1) into V-belt tension measuring device.
- Mount V-belt tension measuring device on V-belt.

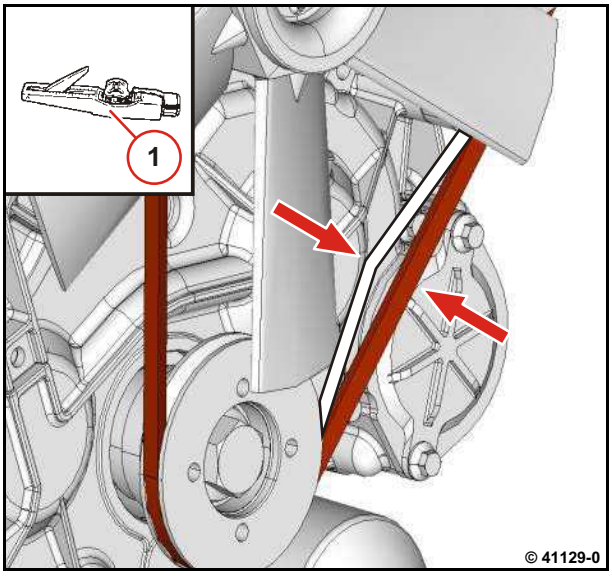

- Press the V-belt measuring device against the V-belt with the button (1) until you hear it click.
- Read the measured value at the point of intersection of the indicator arm and the scale (arrows).

P12 11

P12 21

Note different units on the scale.

- If the nominal value is not reached, the tensioning process must be repeated.

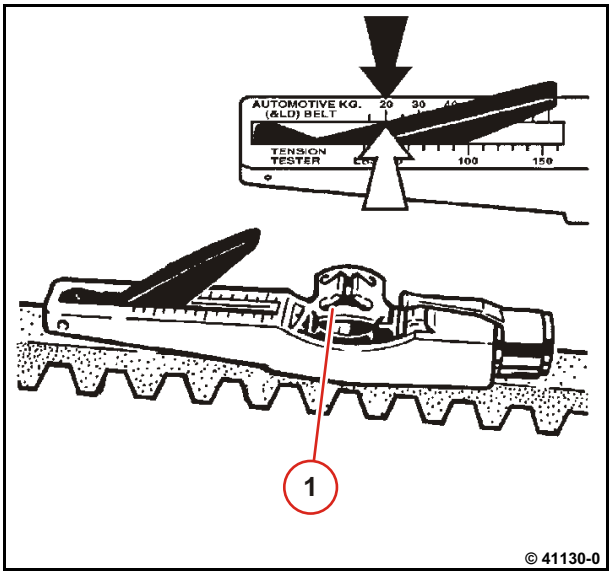

- Remove cable from generator.
- Connect the battery's negative terminal.

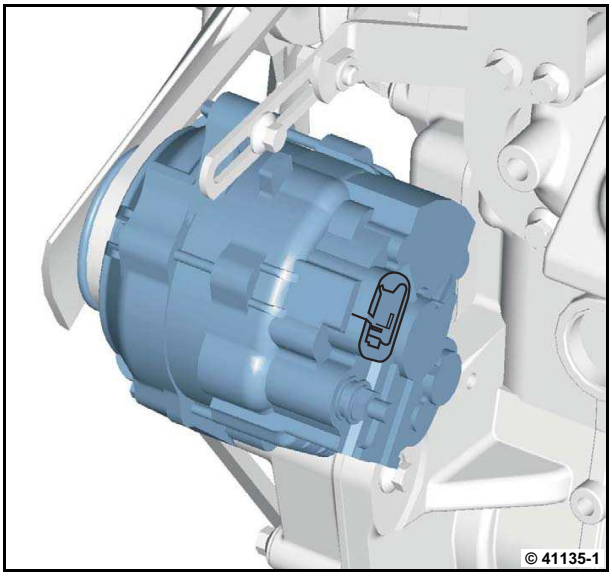

Removing and installing the starter

Commercial available tools

Removing the starter

- Disconnect the battery's negative terminal.
- Disconnect cables.
- Unscrew screws (1).
- Remove starter.
- Visually inspect the component.

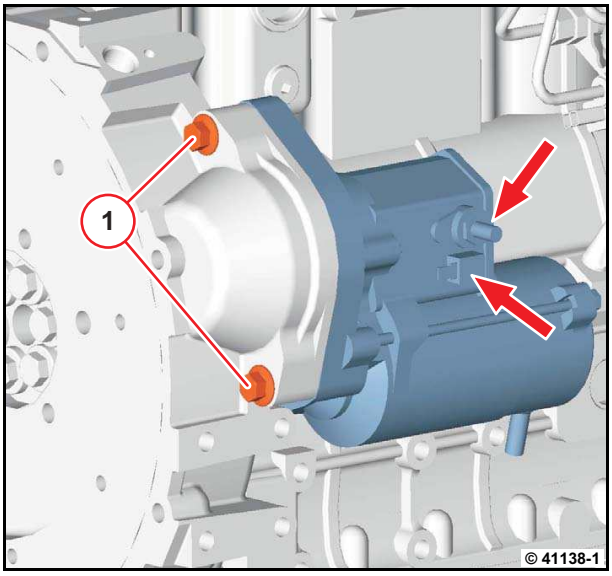

Installing the starter

- Insert starter.
- Tighten screws (1).

  41 Nm

- Connect cables.

  A13 071

Note the assignment of the terminal designations.

- Connect the battery's negative terminal.

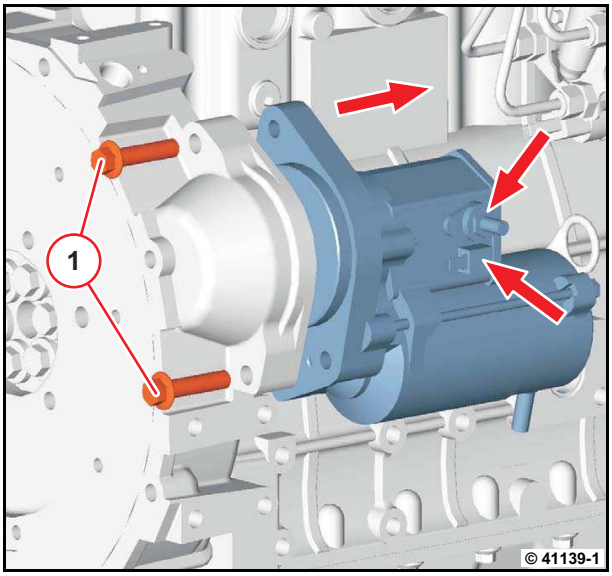

Removing and installing the heating plugs

Commercial available tools

Removing the heating plugs

- Disconnect cables from heating plugs.
- Unscrew nut (1).
- Remove connecting rail (2).
- Unscrew heating plugs (3).
- Visually inspect the components.

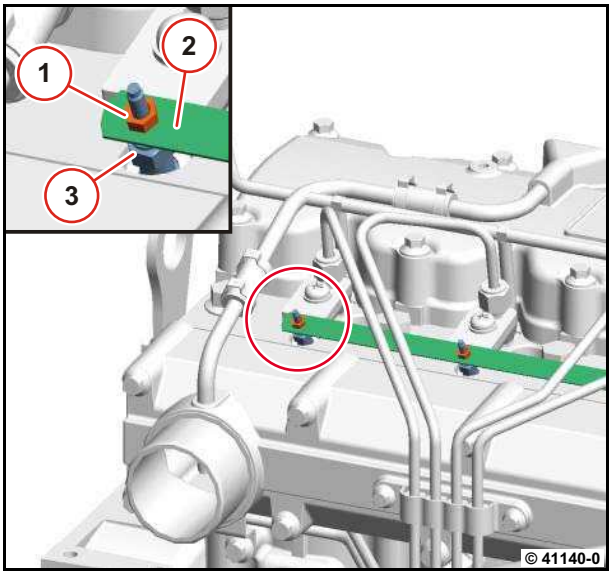

Installing the heating plugs

- Screw in heating plugs (3).

  15 Nm

- Install connecting rail (2).

  2,5 Nm

Ensure that the installation location is free from faults.

Ensure that the connection is perfect.

- Tighten nut (1).
- Connect cables to heating plugs.

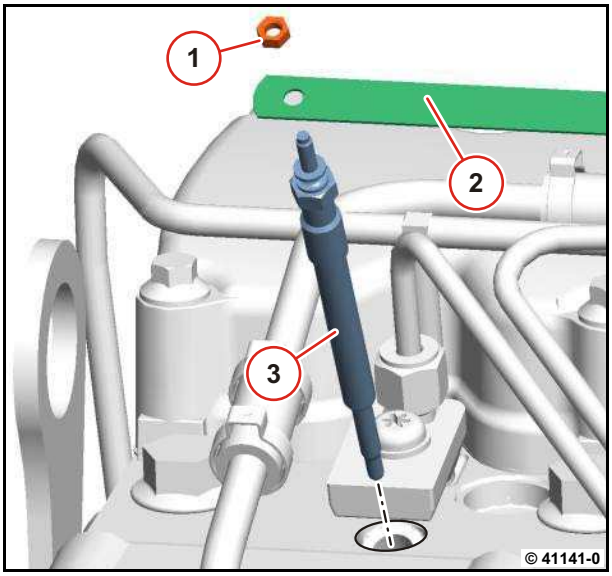

7 Standard tools

Orders

The tools can be ordered directly, stating the order number, from:

WILBAER
Wilhelm Bäcker GmbH & Co.KG
Postfach 14 05 80
42826 Remscheid
Germany
Tel.: +49 (0) 2191 9339-0
Fax: +49 (0) 2191 9339-200
E-mail: info@wilbaer.de
Web: http://www.deutz-tools.com

8024
Assembly pliers
Removing valve stem gaskets

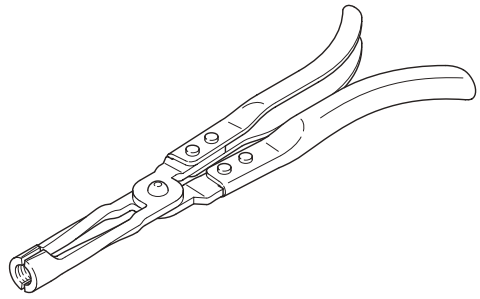
© 37509-2

8115
V-belt tension measuring device
150 to 600 N
for checking the V-belt tension

© 35416-3

8189
Torx tool set
Contents of case:
- Double-ended ring spanner E6/E8
- Double-ended ring spanner E10/E12
Socket wrench insert E8 and E10 (1/4 inch)
- Socket wrench insert E10 and E12 (3/8 inch)
- Socket wrench insert E18 (1/2 inch)

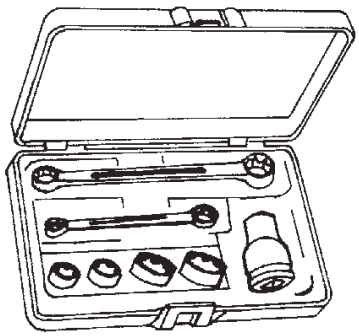
© 39432-1

8190
Rotation angle disc
with magnet
Setting valve clearance

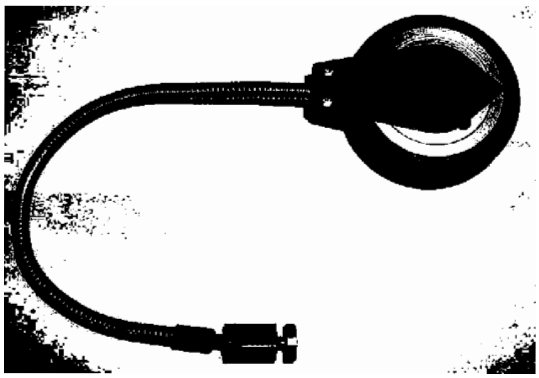

© 43202-0

8200
Counter support
reinforced, size 22
removing and installing main bearing

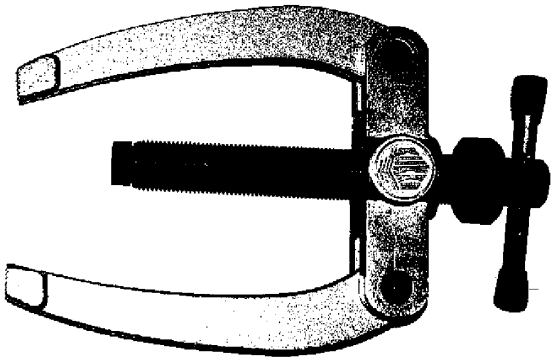

© 41162-0

9017
Assembly lever
Example: Removing and installing the valves

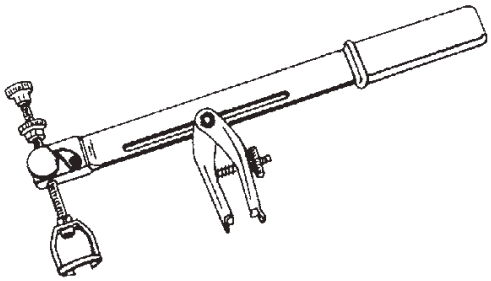

© 37511-2

9123
Torx plus Bit
Safety screw on fuel injector pump gear cap
25 mm long

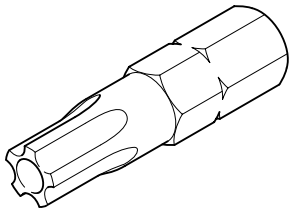

8 Special tools

Orders

The tools can be ordered directly, stating the order number, from:

WILBAER
Wilhelm Bäcker GmbH & Co.KG
Postfach 14 05 80
42826 Remscheid
Germany
Tel.: +49 (0) 2191 9339-0
Fax: +49 (0) 2191 9339-200
E-mail: info@wilbaer.de
Web: http://www.deutz-tools.com

100400
Dial gauge with fixing wheel
Measuring range 0 - 10 mm / 0.01 mm

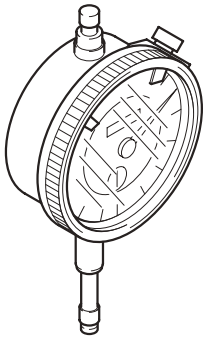
© 35424-1

100750
Measuring device
Measuring bar with two shims
(in conjunction with 100400 and 100410)
Checking valve lag dimension
Checking piston projection

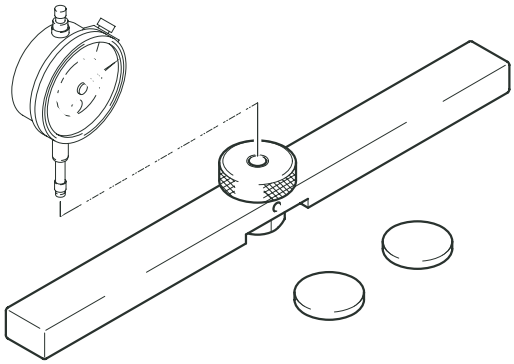
© 39402-1

110180
Measuring pin
Positioning the fuel injector pump toothed wheel

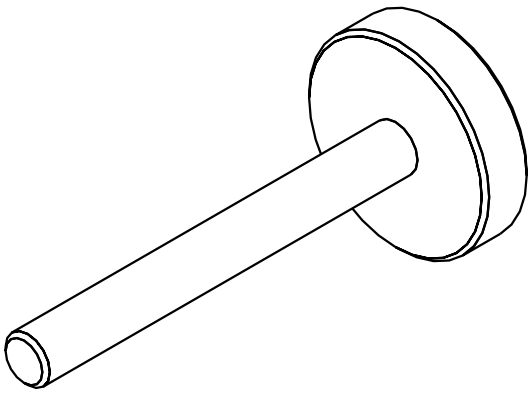
© 41171-0

121420
Assembly sleeves
Set of assembly sleeves for valve stem gasket

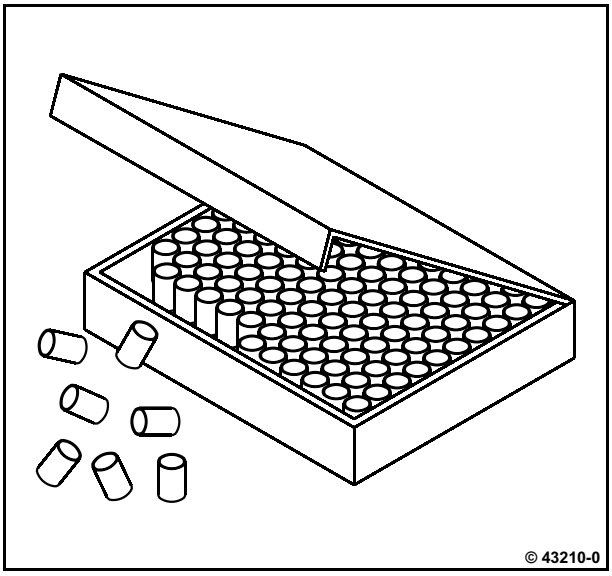

8

121430
Assembly tool
Assembling valve stem gasket

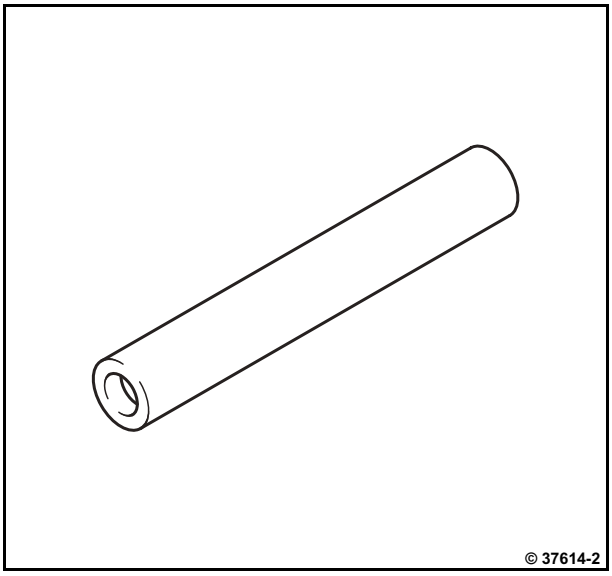

130300
Universal piston ring pliers
Removing and installing the piston rings

130510
Piston ring compressor
Piston diameter 90 mm

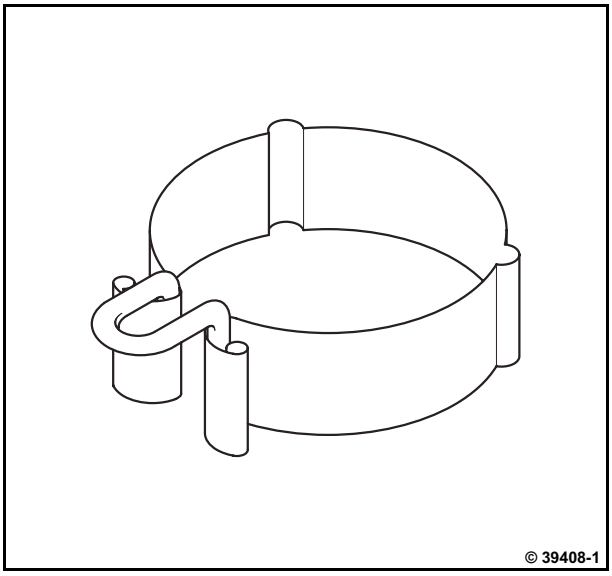

142780
Assembly tool
Installing crankshaft sealing ring
(flywheel side)

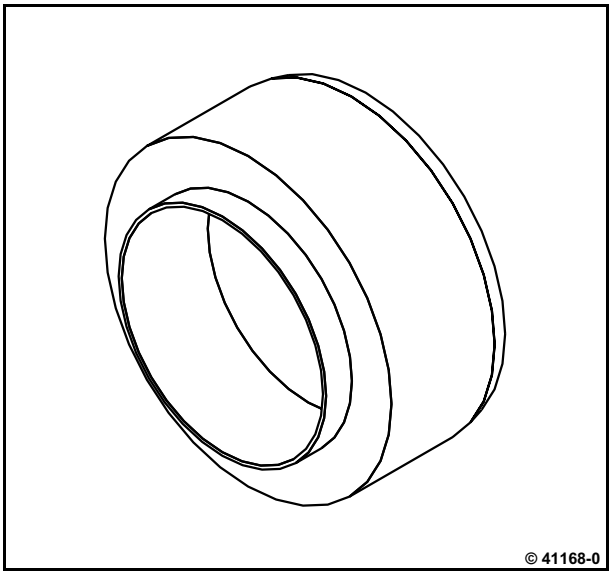

142790
Assembly tool
Installing crankshaft sealing ring
(opposite side to flywheel)

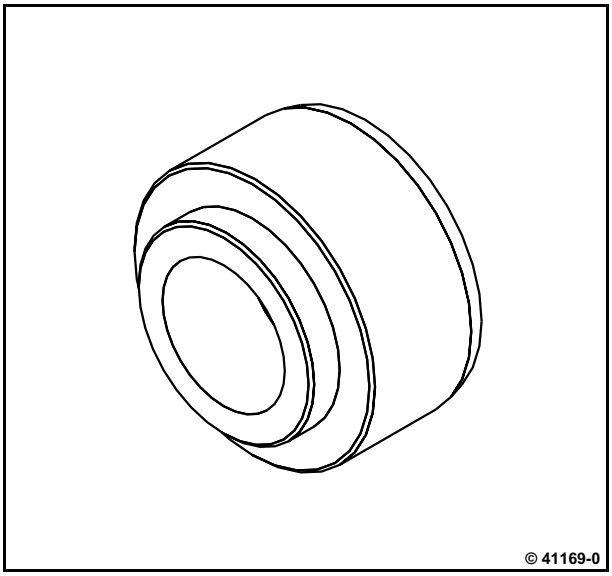

143860
Assembly tool
(in connection with threaded rod 143880)
Removing and installing main bearing in crankcase

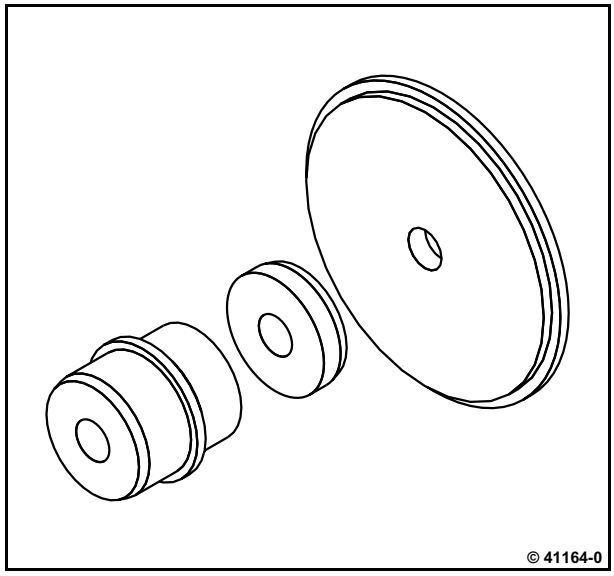

143870
Assembly tool
(in connection with threaded rod 143880 and counter support 8200)
Removing and installing main bearing in main bearing housing

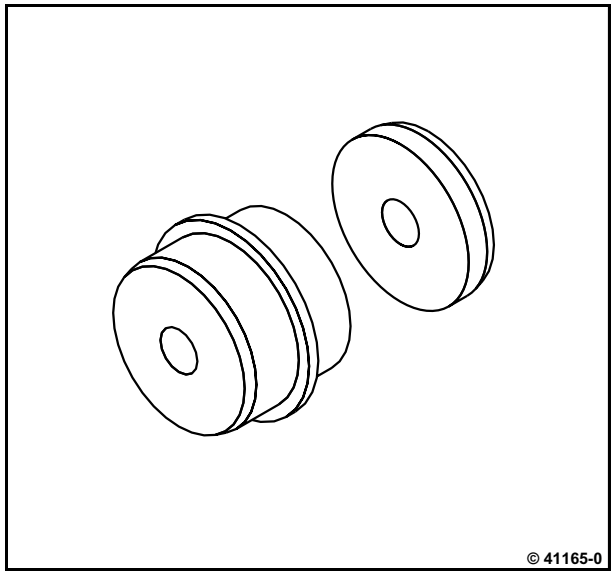

143880
Threaded rod
Removing and installing main bearing

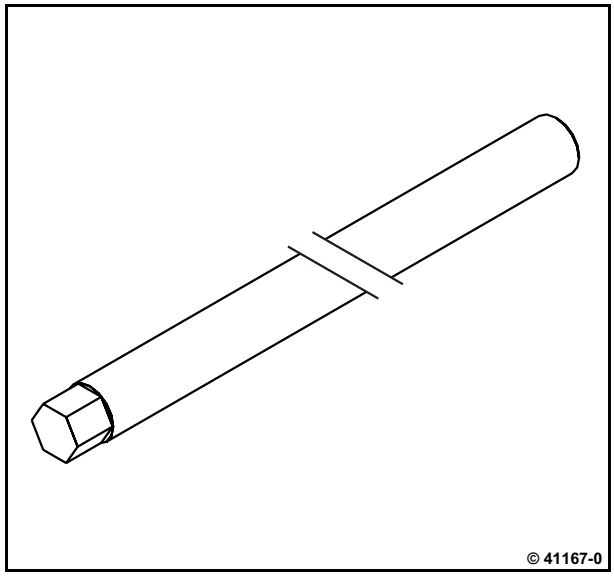

144180
Fixing pin
Fixing the flywheel

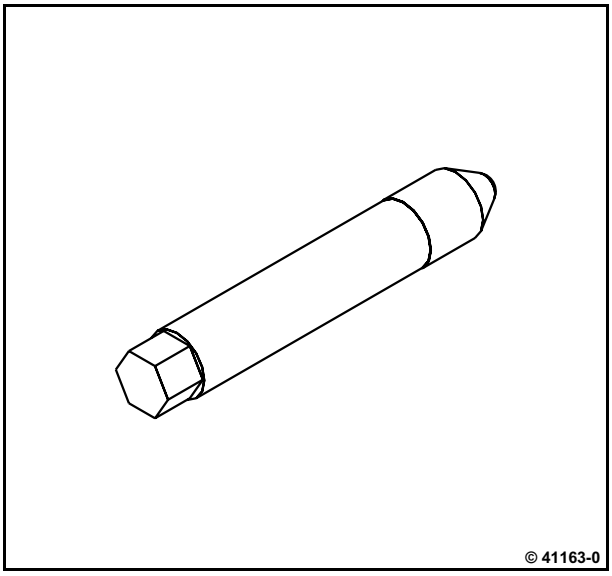
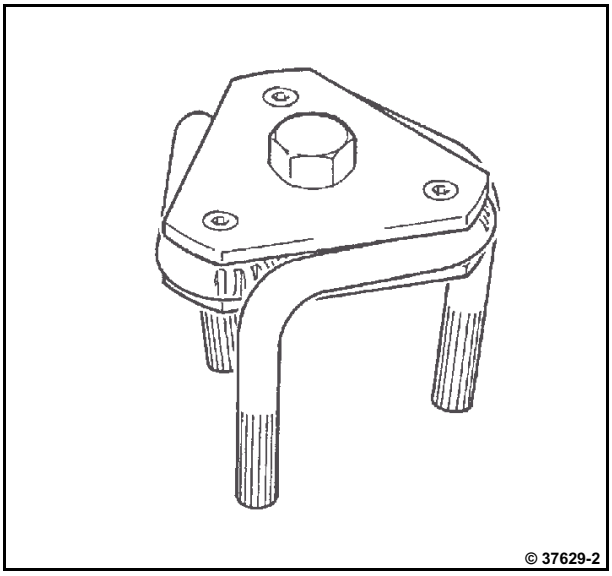
170050
Special wrench
Unscrewing the filter cartridges