https://truckmanualshub.com/

MONTINI Revolution

THE NEW 48V FORKLIFT TRUCKS

LOAD CAPACITIES FROM 1600 KG TO 2000 KG

MR 1.6 | MR 1.8 | MR 1.6 4R | MR 2.0

https://truckmanualshub.com/

A RANGE OF EVER BETTER PERFORMING PRODUCTS

The new electric 3- and 4-wheel forklift trucks in the "MR MONTINI Revolution" series, 48V, with load capacities from 1600 kg to 2000 kg represent a range of 12 models, ideal for indoor work, in tight aisles, to manage logistics for production, intensive work applications and to meet the specific needs of the end users.

Thanks to the compact design, these forklifts are easy to manoeuvre inside warehouses as well as inside transport vehicles.
These products offer lasting and reliable performance and comfort for the user.

MONTINI SUPER STEERING

Rear axle steering up to 101 degrees,
standard on 4-wheel forklifts, so as to:

- steer like a 3-wheel forklift, in the tightest and most limited manoeuvring spaces;
- benefit from maximum manoeuvrability and easy operation;
- guarantee a safe and stable load handling.

MR 1.6

(48V - 3 wheels - 1600 kg nominal capacity at load centre 500 mm)
Length (l2): 1852 mm
Width (b1): 1070 mm
Turning radius (Wa): 1486 mm

MR 1.8

(48V - 3 wheels - 1800 kg nominal capacity at load centre 500 mm)
Length (l2): 2033 mm
Width (b1): 1070 mm
Turning radius (Wa): 1664 mm

MR 1.6 4R

(48V - 4 wheels - 1600 kg nominal capacity at load centre 500 mm)
Length (l2): 2126 mm
Width (b1): 1110 mm
Turning radius (Wa): 1751 mm

MR 2.0

(48V - 4 wheels - 2000 kg nominal capacity at load centre 500 mm)
Length (l2): 2126 mm
Width (b1): 1132 mm
Turning radius (Wa): 1751 mm

https://truckmanualshub.com/

BETTER PERFORMANCE, BETTER AUTONOMY

EQUIPPED WITH BATTERIES WITH HIGH AMP/H CAPACITY FOR LONG OPERATING AUTONOMY

Forklift models “MR 1.6” (3 wheels - 1600 kg nominal capacity) and “MR 2.0” (4 wheels - 2000 kg nominal capacity) can be equipped with **high Amp/h capacity batteries**, in the **GA (Great Autonomy) version**, so as to:

- meet **any kind of work requirement** (wide range of “MONTINI” brand batteries: batteries for demanding applications; low water consumption; for very heavy, intensive and long-life applications, in particular for forklifts fitted with auxiliary equipment);
- guarantee **unbeatable work autonomy**, without having to recharge the battery;
- **work better, work more**, while safeguarding health and the environment.

MR 1.6 GA
48V - maximum battery 688Ah

MR 2.0 GA
48V - maximum battery 1032Ah

MONTINI batteries offer a wide **choice of optional set-ups**:

- centralised water top-up system with tank for filling up the battery cells;
- electrolyte level indicator on battery plug or on battery cell;
- electrolyte level indication on the display;
- air circulation system in the cells and specific plug;
- special battery boxes with integrated handles and openable side guard on the right-hand side for easy removal.

https://truckmanualshub.com/

A LIFTING UNIT WITHOUT RIVAL

GREAT STRENGTH, EXCELLENT VISIBILITY AND LOAD CAPACITY

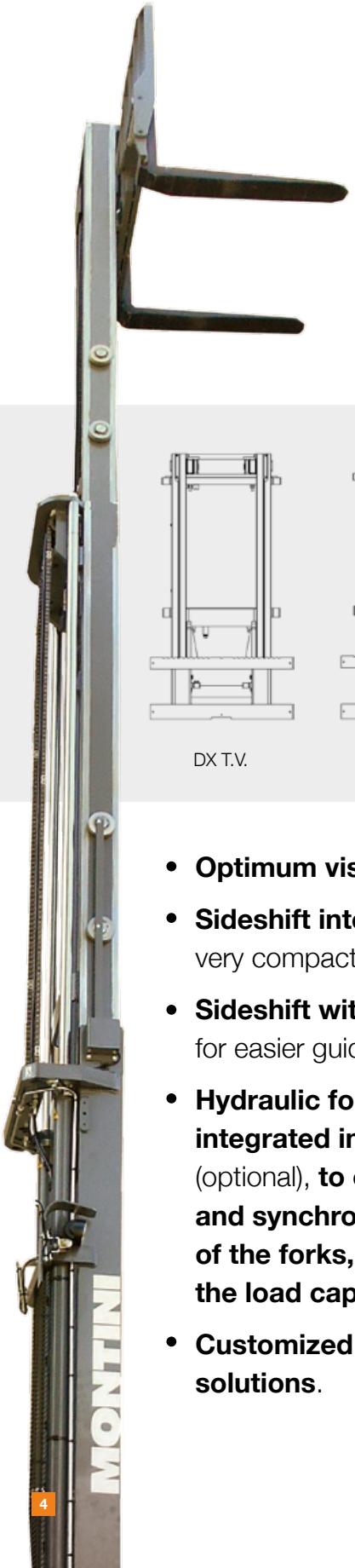

The lifting units, with 2 and 3 ton “C” profiles, **designed and manufactured by MONTINI, are ground on the sliding guides of the bearings and on the angular guide shoes**, to ensure maximum smoothness, greater stability and safety during high lifts.

- **Wide range of masts**, available in Duplex (DX) and Triplex (TX) versions, with total visibility (T.V.) and with total free lift (T.F.L.), **to meet the most varied working requirements and to offer a safe, strong and quick load capacity**.

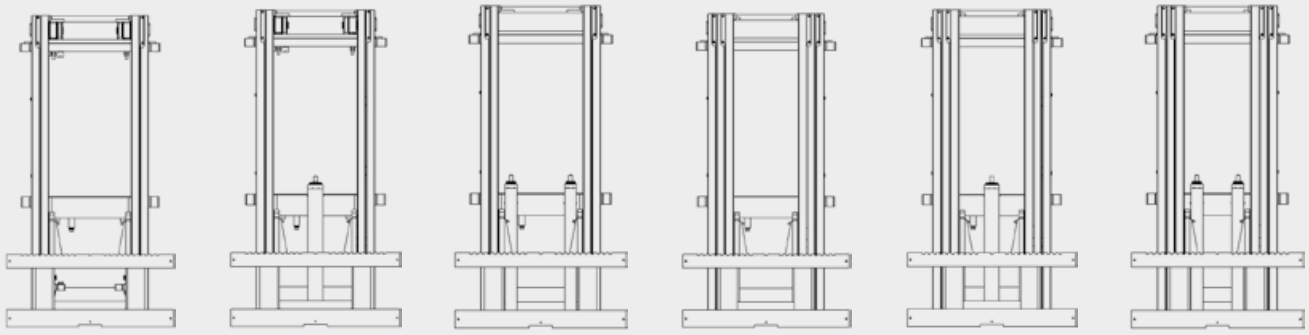

DX T.V. | DX T.F.L. (1 cylinder) | DX T.F.L. (2 cylinders) | TX T.V. | TX T.F.L. (1 cylinder) | TX T.F.L. (2 cylinders)

- **Optimum visibility** in all working conditions.
- **Sideshift integrated in the fork carriage**, very compact and with excellent visibility.
- **Sideshift with grease nipples** for easier guide shoes lubrication.
- **Hydraulic fork positioner integrated in the forklift truck** (optional), **to enable a precise and synchronized movement of the forks, without reducing the load capacity**.
- **Customized lifting unit solutions**.

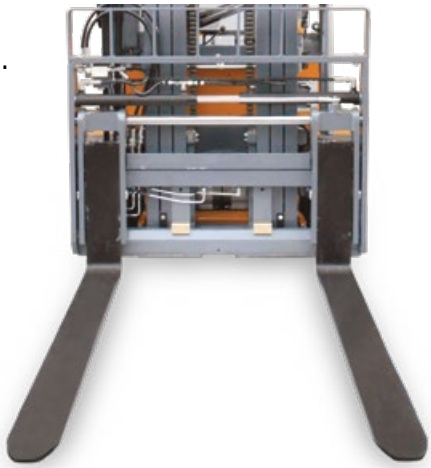

https://truckmanualshub.com/

BETTER PERFORMANCE, BETTER COMFORT, BETTER AUTONOMY

THE BEST WAY TO WORK

The 48V “MR” series has been designed to meet the most varied requirements of indoor material handling and logistics. Designed to handle loads in many demanding indoor and outdoor applications, **these forklifts combine top performance with high levels of energy efficiency**.

They are **extremely practical and easy to handle**, offering high power and considerable residual load capacities. They are the perfect vehicles for handling products thanks to their great ability to manoeuvre where space is limited.

Usable with lead-acid batteries, **they make it possible to improve work**, performing two shifts without having to recharge or change the battery, **and to achieve long-term cost savings**.

They meet customers’ needs; they are **quick, nippy and versatile**.

https://truckmanualshub.com/

CSM - COMFORT SECURITY MONTINI

THE ONLY FORKLIFT TRUCK IN THE WORLD WITH SHOCK ABSORBERS

MONTINI, always attentive to national and international safety regulations, **is the only manufacturer in the world to have designed and patented a suspension system for forklift trucks**: the patented suspension system named **CSM (Comfort Security Montini)** is designed to increase lateral stability and comfort as well as to significantly reduce impact and vibrations transmitted to the operator and the forklift.

The 48V “MR” forklift trucks are also available in the CSM version, i.e. fitted with nitrogen hydropneumatic suspension on the rear steering wheels (3-wheel forklifts) and on the rear steering axle (4-wheel forklifts).

SUSPENSION FOR 3-WHEEL FORKLIFT TRUCKS

PATENT NO. 01308979

Nitrogen hydropneumatic suspension on the rear steering wheels.

- No vibration.
- No effort.
- Better work.
- Safer driving.
- More stable load.

SUSPENSION FOR 4-WHEEL FORKLIFT TRUCKS

PATENT NO. 01321227

Nitrogen hydropneumatic suspension on the rear steering axle.

- More safety.
- More stability.
- More comfort.
- No tensions and shocks.
- Less occupational diseases.

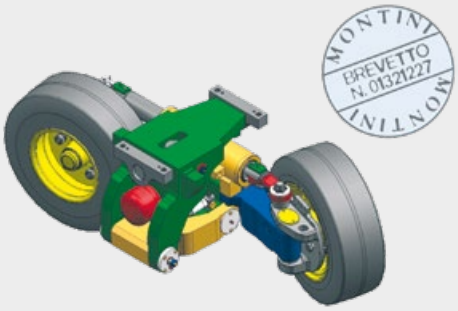

https://truckmanualshub.com/

MORE ERGONOMIC JOYSTICK, MORE PRODUCTIVE WORK

- **Intuitive and ergonomic joystick** (optional) **with proportional control valve with 3 or 4 hydraulic functions**.
- As standard, all lifting unit functions are inhibited when the operator is not in the correct driving position.
- Higher lowering speed of the lifting unit, both laden and unladen.
- Maximum productivity thanks to the **use of two simultaneous operating functions of the lifting unit**.

Tilt 1

Forward 2

Reverse 3

Horn 4

4th function 5
for the installation
of auxiliary equipment

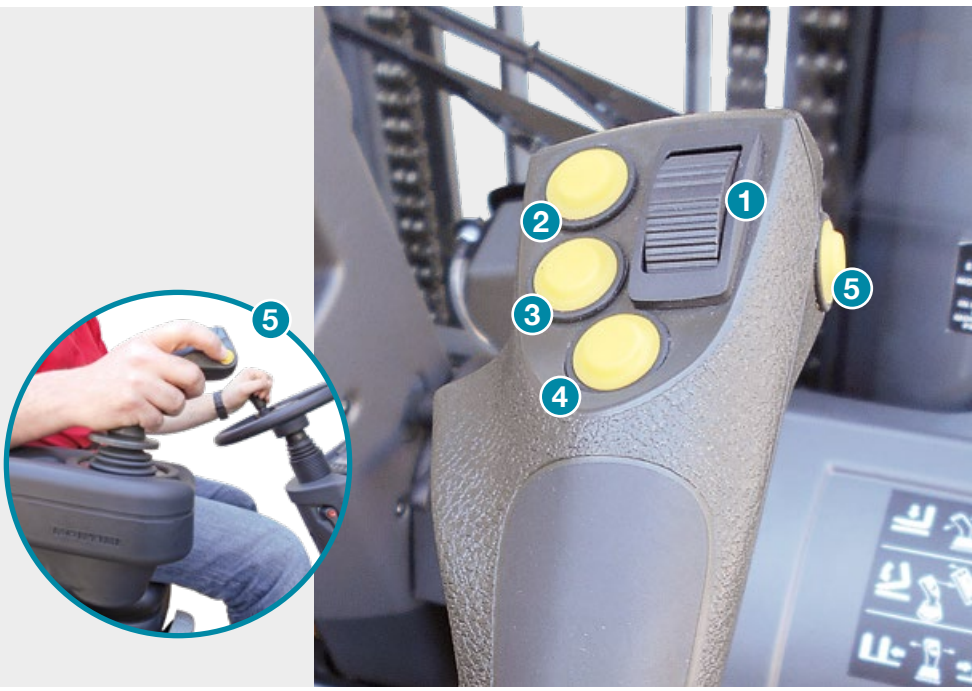

PEDAL BOARDS

Standard large and spacious pedal board with forward/backward double pedal and central brake.

Optional pedal board with single pedal and central brake (with forward/backward selection using a lever on the steering wheel or joystick).

https://truckmanualshub.com/

ELECTRONIC TECHNOLOGY

The **innovative electronic technology**, developed in German research laboratories, **with alternating current inverters and Can Bus communication**, guarantees high efficiency and low energy consumption; it comes with a new diagnosis system for keeping everything under control and reducing any machine downtime.

The large colour display, with multifunction buttons, **ensure accessibility and control of the forklift's basic functions**.

The functions are defined by icons displayed on the relative bar, for example:

- handbrake locked;
- seat belt not fastened;
- seat switch open;
- rear wheel not straight;
- brake fluid level too low;
- maintenance hour meter expired;
- activates "tortoise speed";
- deactivates "tortoise speed".

Access password personalised for the operator.

https://truckmanualshub.com/

SERVICES AND SAFETY

Possibility to equip the forklifts with **GPRS system** (General Packet Radio System), mobile phone technology, installed on the battery of the forklift, **to check**:

- **correct battery use and management** (to check regular charge and discharge of the battery, correct operation of the battery charger during charging and the electrolyte level inside the battery cells);
- **the registration of possible forklift collisions**.

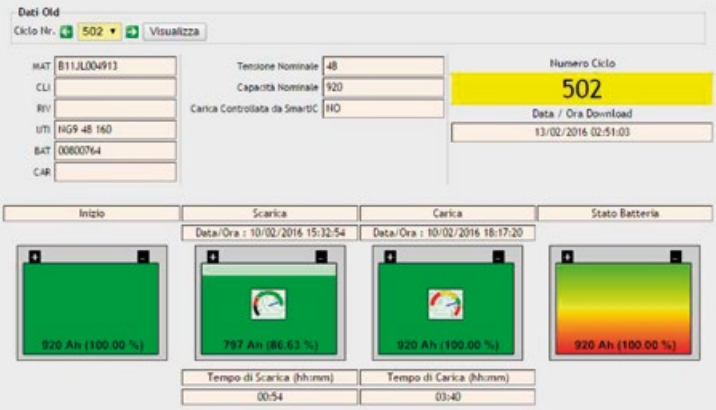

Possibility to equip forklifts with the **innovative "Remote Control" system for rapidly detecting any electric faults** through remote data transmission, **to localize the forklift, activate the anti-theft device and block the forklift functions.**

https://truckmanualshub.com/

EQUIPMENT VARIATIONS

OVERHEAD GUARD

Overhead guard designed to be equipped easily with cab at any time, without having to modify or replace the original structure.

It can be cabbed:

- with full panelling, fitted with front and rear windows with wipers and side doors;
- with front and rear windows only (openable), fitted with wipers, and PVC side doors;
- with or without heating system.

HEATED WINDOWS

As an optional, cabs can be with **innovative heated (or thermal) windows**.

The heated window is made from “coated” glass, with anti-fogging as its main feature.

Coated glass is made by depositing metal oxides with good electric conductivity and optical transparency on the surface.

Electricity is passed through the coating and guarantees total resistance to fogging while at the same time creating the ideal temperature inside the cab for the operator.

HEATER

Heating system: **fast and direct heating** with air vents **inside the cab**.

The heater ensures a cab temperature which is always comfortable.

https://truckmanualshub.com/

PRECISION AND PERFORMANCE THANKS TO OPTIONAL HYDRAULIC CONTROLS

The 48V “MR” forklift trucks can also be fitted (as an optional) with hydraulic controls with **Fingertips** (mini levers) or with **Pilot levers** (mini joysticks), easy to access and use since they are installed on an adjustable ergonomic armrest with direction control, for finding the most comfortable driving positions.

Simply operate the **Fingertip controls** gently and this will allow you to combine up to 5 functions, for quick, precise, safe driving and operation.

The **controls with Pilot levers** allow you to have up to 5 functions to manoeuvre the MR forklift safely and reliably.

SEATS

“Grammer Primo M” seat kit complete with armrests and headrest, in fabric (optional).

New design concept applied to the seat. “Grammer Primo L” seat (optional).

Seat kit with armrests and headrest, in PVC or fabric, also with heating.

1. Headrest
2. Heating system
3. Tilting left armrest
4. Tilting right armrest
5. Fabric cover
6. Pneumatic suspension

https://truckmanualshub.com/

MONTINI FORK POSITIONER WITH FREE MOVEMENT OF EACH FORK

The MR forklifts can be equipped with the optional **MONTINI fork positioner with independent forks**, also known as a fork positioner with free movement of each fork.

This attachment is very useful and beneficial for the operator in that, when loading and handling Euro-pallets (800 x 1200 mm) with pick-up from the 800-mm side, to load inside a lorry, **it allows him to position the pallet close to the edge of the vehicle**, without having to manoeuvre the forklift and with no risk of hitting and damaging the side of the lorry.

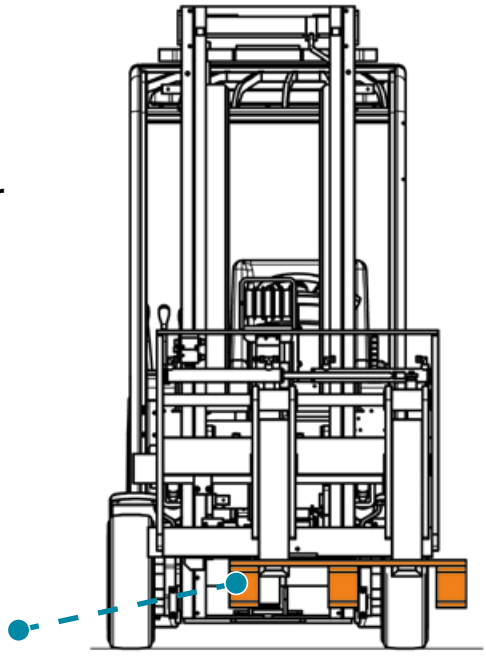

LIGHTING EQUIPMENT AND SIGNALLING DEVICES

MR forklift trucks can be fitted with a **wide range of optional lighting accessories, signalling devices and mirrors**, to meet the requirements of different applications:

- adjustable LED working lights, installed on the mast or on the overhead guard, also available with suitable protection;
- blue LED device to signal the forklift's presence (blue spotlight);
- strobe or rotating flashing light, also available with suitable protection;
- rearview mirror, also available in panoramic version.

https://truckmanualshub.com/

TECHNICAL FEATURES

MR 1.6 - MR 1.8

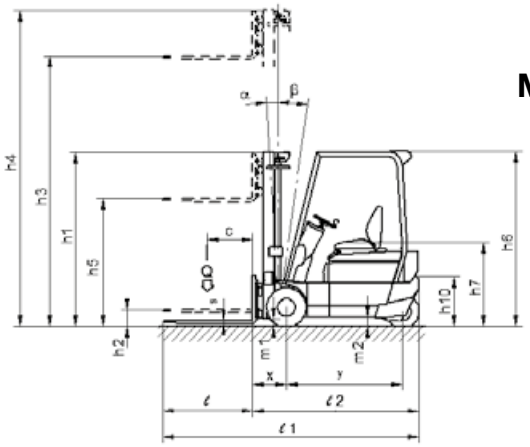

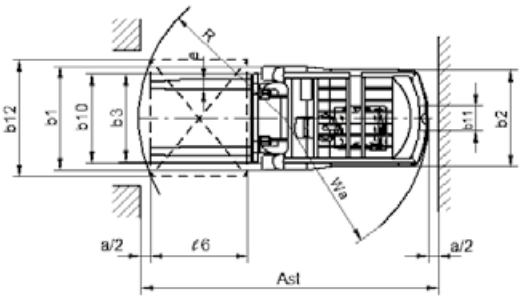

MR 1.6 GA

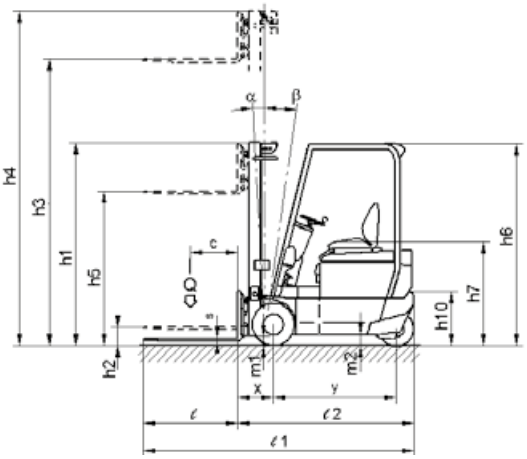

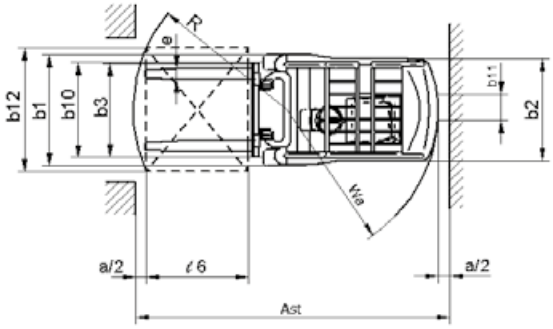

MR 1.6 4R - MR 2.0

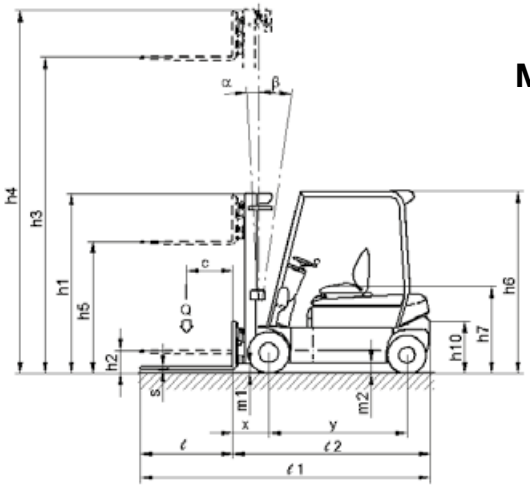

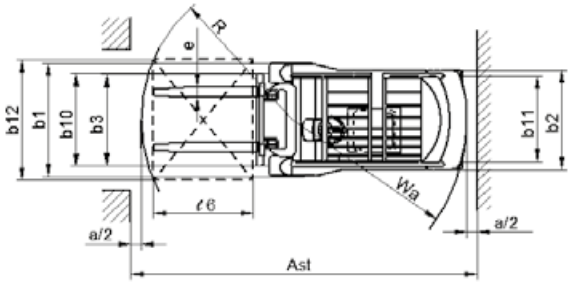

MR 2.0 GA

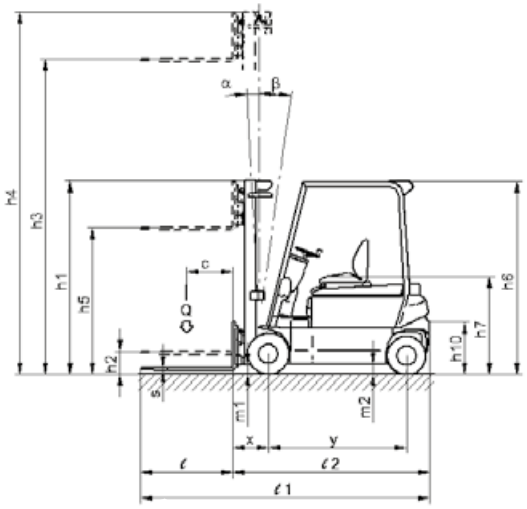

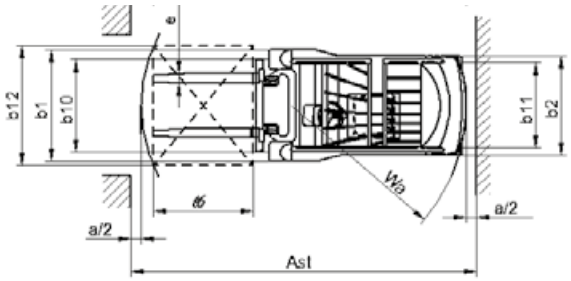

https://truckmanualshub.com/

Characteristics	1.1	Manufacturer		MONTINI		
	1.2	Model		MR 1.6	MR 1.6 CSM	
	1.3	Drive: electric, diesel, petrol, L.P. gas, electric mains		electric		
	1.4	Operation: manual, pedestrian, stand-on, seated, order picker		seated		
	1.5	Capacity/Load	Q (t)	1,6		
	1.6	Load centre	c (mm)	500		
	1.8	Load distance	x (mm)	375		
	1.9	Wheelbase	y (mm)	1295		
Weights	2.1	Weight	Kg	3030		
	2.2	Axle loading, laden, front/rear	Kg	4131/499		
	2.3	Axle loading, unladen, front/rear	Kg	1450/1580		
Equipment	3.1	Tyres: superelastic (SE), cushion (C), pneumatic (PN)		SE/C/PN		
	3.2	Tyre size, front		18x7-8		**1.**
	3.3	Tyre size, rear		15x4½-8		**2.**
	3.5	Wheels, number front/rear (x=driven wheel)		2x/2		
	3.6	Tread width, front	b10 (mm)	914		**3.**
	3.7	Tread width, rear	b11 (mm)	176		**4.**
Basic dimensions	4.1	Max. tilt of mast/fork carriage, forward/backward (α-β)	Degrees	3°/8°		
	4.2	Lowered mast height	h1 (mm)	2165		
	4.3	Free lift	h2 (mm)	-		
	4.4	Lift height	h3 (mm)	3300		
	4.5	Extended mast height	h4 (mm)	3850		
	4.7	Overhead guard height	h6 (mm)	1965		
	4.8	Seat height	h7 (mm)	895		
	4.12	Tow coupling height	h10 (mm)	560		
	4.19	Total length	ℓ1 (mm)	2852		
	4.20	Length to face of forks	ℓ2 (mm)	1852		
	4.21	Overall width	b1/b2 (mm)	1070/995		**5.**
	4.22	Forks dimensions	s/e/ℓ (mm)	35/100/1000		
	4.23	Fork carriage ISO 2330, class/type A, B		ISO 2A		
	4.24	Min. fork carriage width	b3 (mm)	910		
	4.31	Ground clearance, under mast, laden	m1 (mm)	85		
	4.32	Ground clearance, centre of wheelbase, laden	m2 (mm)	110		
	4.33	Aisle width with pallet 1000x1200 (l6xb12), pick-up side 1200	Ast (mm)	3061		**6.**
	4.34	Aisle width with pallet 800x1200 (b12xl6), pick-up side 800	Ast (mm)	3261		**6.**
	4.35	Turning radius	Wa (mm)	1486		
	4.36	Distance from turning centre and truck centre axis	b13 (mm)	0		
Performance data	5.1	Travel speed, laden/unladen	Km/h	15/16		
	5.2	Lift speed, laden/unladen	m/s	0,37/0,48		
	5.3	Lowering speed, laden/unladen	m/s	0,52/0,50		
	5.5	Drawbar pull, laden/unladen	daN	3090/3335		
	5.6	Max. drawbar pull, laden/unladen	daN	8171/8338		
	5.7	Gradeability, laden/unladen	%	7,5/14		
	5.8	Max. gradeability, laden/unladen	%	20/30		
	5.9	Acceleration time, laden/unladen	s	4,2/3,7		
	5.10	Service brake		hydraulic/electric		
Electric motor	6.1	Drive motor, output S2 60 min.	Kw	2x3,8		
	6.2	Lift motor, output at S3 15%	Kw	11		
	6.3	Battery according to DIN 43531/35/36 A, B, C		DIN 43531 A		
	6.4	Rated voltage/capacity 5h	V/Ah	48/460-552		**7.**
	6.5	Battery weight, min./max.	Kg	673/789		
	6.6	Energy consumption according to VDI cycle	KWh/h	-		
Misc.	8.1	Type of electronic control		inverter		
	8.2	Working pressure for auxiliary equipment	bar	150		
	8.3	Oil volume for auxiliary equipment	l/min	-		
	8.4	Sound pressure level at operator's ear	db (A)	< 80 db (A)		
	8.5	Tow coupling, model/type		-		

1. Optional cushion tyres 457x152-308 for MR 1.6-1.8-1.6 4R; 457x178-308 for MR 2.0
2. Optional cushion tyres 356x114-230,2 for MR 1.6-1.8; 394x127-254 for MR 1.6 4R; 394x152x254 for MR 2.0
3. With cushion tyres 918 for MR 1.6-1.8; 948 for MR 1.6 4R; 922 for MR 2.0
4. With cushion tyres 183 for MR 1.6-1.8; 842,5 for MR 1.6 4R-2.0

https://truckmanualshub.com/

MONTINI		MONTINI		MONTINI		MONTINI		MONTINI	
MR 1.6 GA	MR 1.6 GA CSM	MR 1.8	MR 1.8 CSM	MR 1.6 4R	MR 1.6 4R CSM	MR 2.0	MR 2.0 CSM	MR 2.0 GA	MR 2.0 GA CSM
electric		electric		electric		electric		electric	
seated		seated		seated		seated		seated	
1,6		1,8		1,6		2		2	
500		500		500		500		500	
375		375		375		375		375	
1295		1476		1503		1503		1503	
3300		3210		3260	3295	3440	3475	3570	3605
4332/568		4492/518		3930/930	3930/965	4825/615	4825/650	4935/635	4935/670
1650/1650		1625/1585		1640/1620	1640/1655	1660/1780	1660/1815	1770/1800	1770/1835
SE/C/PN		SE/C/PN		SE/C/PN		SE/C/PN		SE/C/PN	
18x7-8	**1.**	18x7-8	**1.**	18x7-8	**1.**	200/50-10	**1.**	200/50-10	**1.**
15x4½-8	**2.**	15x4½-8	**2.**	16x6-8	**2.**	16x6-8	**2.**	16x6-8	**2.**
2x/2		2x/2		2x/2		2x/2		2x/2	
914	**3.**	914	**3.**	954	**3.**	924	**3.**	924	**3.**
176	**4.**	176	**4.**	838,5	**4.**	838,5	**4.**	838,5	**4.**
3°/8°		3°/8°		3°/8°		3°/8°		3°/8°	
2165		2165		2165		2165		2165	
-		-		-		-		-	
3300		3300		3300		3300		3300	
3850		3850		3850		3850		3850	
2125		1965		1965		1965		2125	
1052		895		895		895		1052	
560		560		560		560		560	
2852		3033		3126		3126		3126	
1852		2033		2126		2126		2126	
1070/995	**5.**	1070/995	**5.**	1110/995	**5.**	1132/995	**5.**	1132/995	**5.**
35/100/1000		35/130/1000		35/100/1000		35/130/1000		35/130/1000	
ISO 2A		ISO 2A		ISO 2A		ISO 2A		ISO 2A	
910		910		910		910		910	
85		85		85		85		85	
110		110		110		110		110	
3061	**6.**	3239	**6.**	3326	**6.**	3326	**6.**	3326	**6.**
3261	**6.**	3439	**6.**	3526	**6.**	3526	**6.**	3526	**6.**
1486		1664		1751		1751		1751	
0		0		0		0		0	
15/16		15/16		15/16		15/16		15/16	
0,37/0,48		0,32/0,48		0,37/0,48		0,37/0,48		0,37/0,48	
0,52/0,50		0,52/0,50		0,52/0,50		0,52/0,50		0,52/0,50	
3090/3335		3010/3255		3090/3335		3090/3335		3090/3335	
8171/8338		8091/8258		8171/8338		8171/8338		8171/8338	
7,5/14		7/14		7,5/14		7,5/14		7,5/14	
20/30		19/30		17/28		17/28		17/28	
4,2/3,7		4,2/3,7		4,2/3,7		4,2/3,7		4,2/3,7	
hydraulic/electric		hydraulic/electric		hydraulic/electric		hydraulic/electric		hydraulic/electric	
2x3,8		2x3,8		2x3,8		2x3,8		2x3,8	
11		11		11		11		11	
DIN 43531 A		DIN 43531 A		DIN 43531 A		DIN 43531 A		DIN 43531 A	
48/560-688	**7.**	48/575-828	**7.**	48/575-828	**7.**	48/575-828	**7.**	48/840-1032	**7.**
894/990		955/1100		955/1100		955/1100		1263/1385	
-		-		-		-		-	
inverter		inverter		inverter		inverter		inverter	
150		150		150		150		150	
-		-		-		-		-	
< 80 db (A)		< 80 db (A)		< 80 db (A)		< 80 db (A)		< 80 db (A)	
-		-		-		-		-	

5. With cushion tyres 1070/995 for MR 1.6-1.8; 1100/995 for MR 1.6 4R-2.0
6. Ast = Wa + x + l6 + a (a = 200 mm).
7. Other capacities available on request.

All MONTINI products comply with Machinery Directive 2006/42/EC and Directives 2006/95/EC and 2004/108/EC.

https://truckmanualshub.com/

MONTINI Revolution

Depliant MR 1.6-2.0 (48V) - 10-2018 - Cod. 5014119.EN - Graphic Design: 3pix
The data provided herein is purely indicative and is not binding, the manufacturer therefore reserves the right to make changes as and when deemed appropriate.

MONTINI di Garotti Francesco & C. s.n.c.

HEAD OFFICE

IT - 48033 Cotignola RA
Via G. Bentini, 7/9
Tel. +39 0545 991001
Fax +39 0545 42150

SALES MANAGEMENT

IT - 48033 Cotignola RA
Corso Sforza, 32
Tel. +39 0545 991051
Fax +39 0545 42127

SPARE PARTS WAREHOUSE

IT - 48022 Lugo RA
Via A. da Barbiano, 8
Tel. +39 0545 991081
Fax +39 0545 902988

www.montini.biz
info@montini.biz