https://truckmanualshub.com/

Operation and Service Manual

VANTAGE TruckALL & VanGO Series

(3rd Edition)

VANTAGE VEHICLE GROUP

https://truckmanualshub.com/

FOREWORD

Dear Customer,

Thank you for your purchase and use of Vantage Vehicle Group vehicle.

The purpose of this manual is to provide you some useful information and necessary technical data on operation, maintenance, trouble-shooting and service of Vantage TruckALL & VanGO series. Since the automobile vehicles made by our plant are mounted with different engine models, and each type of engine is provided with special-purpose manual on service, this manual only gives a general description on engine. Therefore, the operation manual of engine will prevail in case of any inconsistency with the operation manual of engine.

Your valuable comments on our products are warmly welcome. We will always carry out improvement to perfect the Vantage TruckALL & VanGO series.

Vantage Vehicle Group

https://truckmanualshub.com/

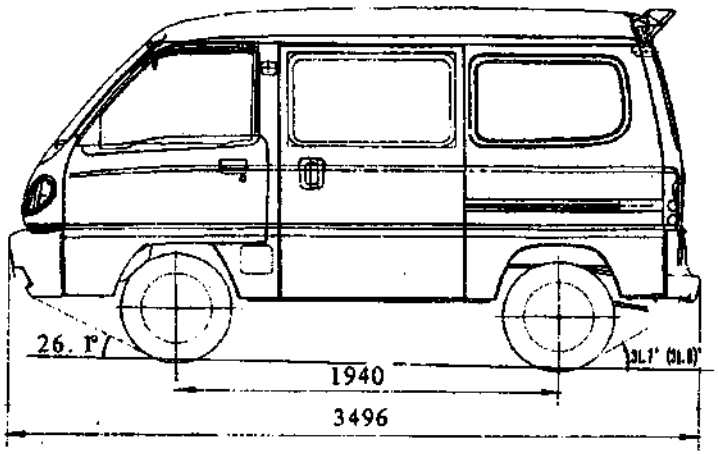

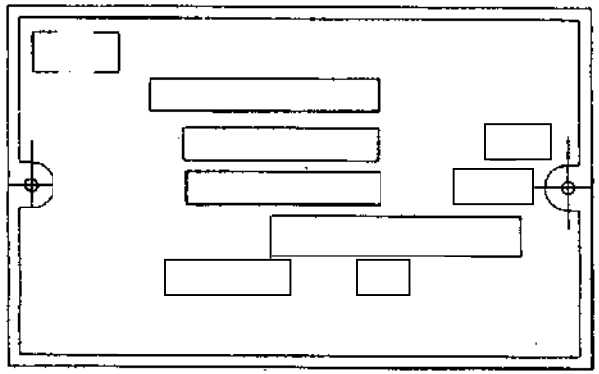

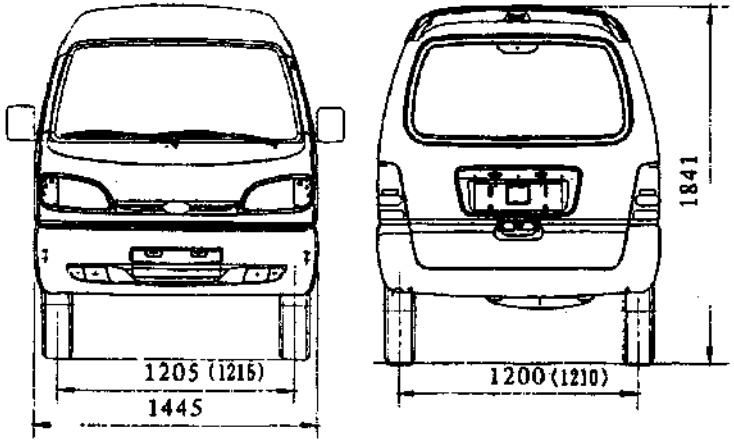

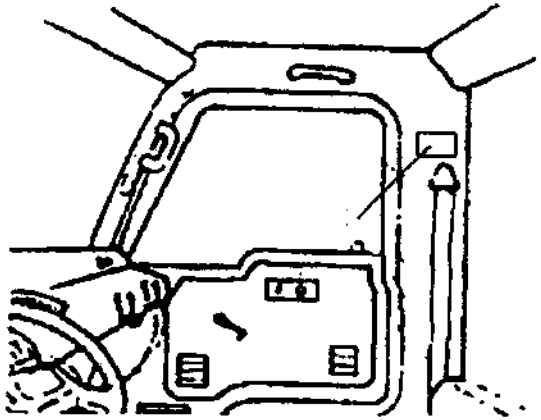

Position of Nameplate

VanGO Passenger Van Series

Note

The nameplate is mounted on the right central column inside the cabin, as shown in the above picture.

https://truckmanualshub.com/

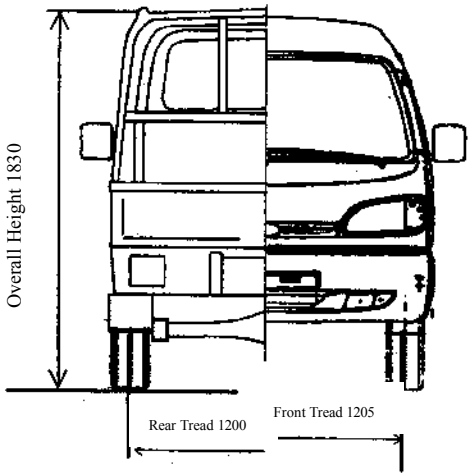

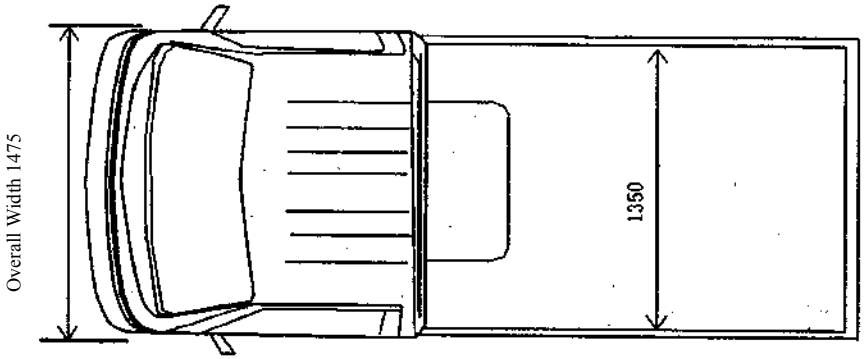

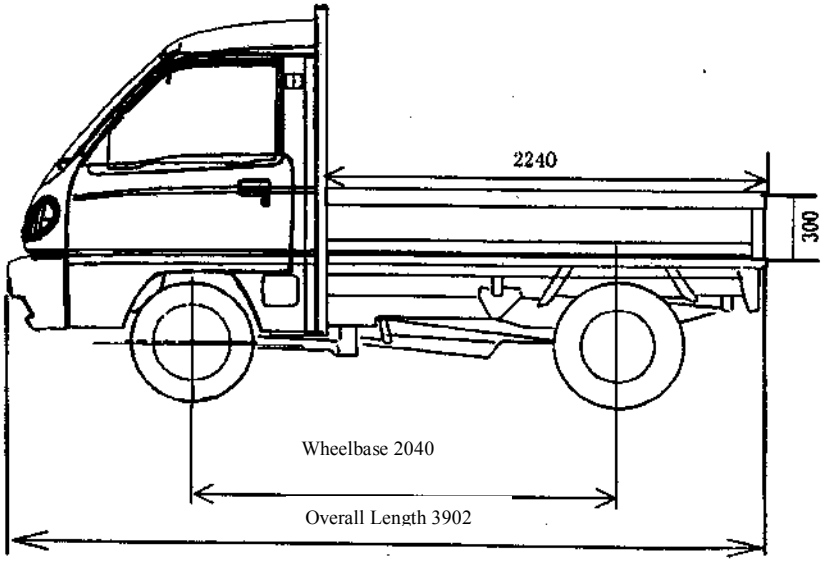

https://truckmanualshub.com/

Contents

Chapter I. Whole vehicle……1

Section 1. General introduction……1
Section 2. Operation of vehicle……7
Section 3. Service and maintenance of vehicle……20

Chapter II. Engine ……34

Section 1. Accessories to engine with carburetor……34
Section 2. Accessories to electronic fuel injection type engine series……40

Chapter III. Chassis……46

Section 1. Clutch……46
Section 2. Transmission……49
Section 3. Drive-shaft……67
Section 4. Rear axle……68
Section 5. Suspension system……75
Section 6. Steering system……81
Section 7. Braking system……91
Section 8. Tire and wheel……109

https://truckmanualshub.com/

Contents

Chapter IV. Vehicle body……114

Section 1. Front door and rear slide door……114
Section 2. Rear door……128
Section 3. Seats……130
Section 4. Instrument panel……132
Section 5. Front windshield, rear windshield and side window……133
Section 6. Bumper……136

Chapter V. A/C system……138

Section 1. Heating system……138
Section 2. Cooling system……141

Chapter VI. Vehicle electrical equipment……155

Section 1. Power supply system……155
Section 2. Igniting system……166
Section 3. Electronic fuel injection code anti-theft system……171
Section 4. Electrical equipment and its accessories……176

Appendixes……184

https://truckmanualshub.com/

Chapter I. Whole Vehicle

Section 1. General Introduction

I. VIN and engine number location

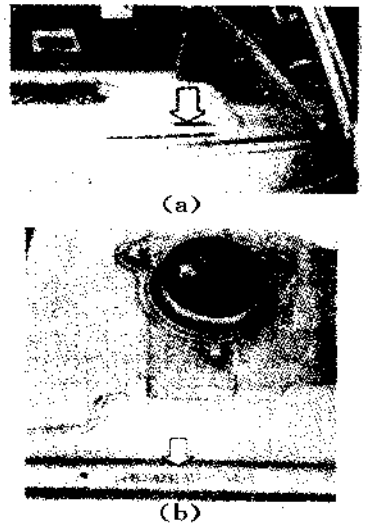

Fig. 1-1 VIN location

a—VIN located at front left of the instrument panel

b—VIN located at the surface of wheel cover under the driver's seat

Fig. 1-2 Engine number location

Engine number located on the right surface of the cylinder block under the carburetor

https://truckmanualshub.com/

II. Vehicle parameters

Vehicle type				VANGO	TRUCKALL
Weight parameters	Rated passengers			6-8 persons	2 persons
	Equipment weight			895kg	865kg
	Rated load age			————	545kg
	Total weight			1410kg	
	Axle-load distribution	No load	Front axle	480kg	475kg
			Rear axle	415kg	390kg
		Full load	Front axle	642kg	
			Rear axle	768kg	
Size parameters	External size		Length	3496mm	
			Width	1445mm	
			height	1841mm	
	Axle base			1940mm	
	Wheelbase	Front wheel		1215mm	
		Rear wheel		1210mm	
	Front suspension			844mm	
	Rear suspension			712mm	
	Min. Lift-off clearance			156mm	
	Angel of approach			26.1°	
	Angel of departure			31.7 °	
	Max. Steering angle of front inside wheel			37 °	
	Front position	Kingpin inclination angle		11° 30′	
		Kingpin caster angle		5 °	
		Front wheel camber angle		1 °	
		Toe-in		2-5mm	
Performance parameters	Max. speed.+			110km/h	
	Max. climbing capacity			≥29%	
	Fuel consumption			≤6L/100km	
	Min. turn diameter			9m	
	Discharged pollutant	CO		2.72g/km	
		HC+NOx		0.97g/km	

https://truckmanualshub.com/

III. Main parameters and structure description

Parameters of engine assy. with transmission

Ararrangement	I-4, water cooled, 4-stroke, overhead camshaft EFI gas engine		Carburetor
Cylinder bore X travel mm	65.5×78	65.5×72	62×72
Discharge	1.051	0.97	0.87
Compression ratio	9.0	8.8	8.7
Rated Horse Power	55	45	40
Max. torque N • m/rpm	83/3000-3500	74/3000-3500	66/3000-3500
Supply mode	Multipoint closed loop electronic control fuel injection system		-

https://truckmanualshub.com/

Capacity parameters	
Fuel tank:	37L
Engine lubricating system:	3.5L
Cooling system:	4.0L
Transmission:	1.3L
Rear axle:	1.3L
Steering gear:	0.6L
Structural description	
Drive-shaft	
Type	Single joint, open type, hollow, double universal joint
Rear axle	
Type	Single stage speed reduction, gear final drive
Final drive ratio	5.125
Axle housing type	Pressing, welding and integral
Half axle type	Semi-floating
Differential type	Planetary taper gear
Suspension	
Front suspension	Strut swing-arm independent suspension, coil spring, equipped with stabilizer bar, bi-directional hydraulic tube absorber
Rear suspension	Longitudinal semi-ellipse plate spring, bi-directional hydraulic tube absorber

Tire (general cross ply	165/70R13 (5.00-12ULT)
Rim(general cross ply)	5.00×13 (4.00B×12)
Tire pressure(general cross ply)	
Front wheel	200kPa (21kPa)
Rear wheel and spare wheel)	230kPa (260kPa)
Steering gear	
Type	Gear rack type
Braking system	
Running braking system arrangement	Bi-pipe hydraulic braking, with braking force distribution valve, equipped with vacuum booster
Brake	
Front brake	Disk, floating braking tongs (selecting drum brake)
Rear brake	Drum, clearance regulated automatically
Braking system	
Arrangement	Stay control, act on two rear wheel
Vehicle body	Bearing and full metal enclosed body, 5 doors(2 front doors, 2 slide doors and 1 back door), three-point seat belt, panoramic camber windshield

https://truckmanualshub.com/

IV Repair regulations

1. When repairing electric parts, the joint of binding post of battery negative pole should be disconnected first, in order to avoid electric shock or short; the step is to unscrew the nut on negative pole slice end, to separate ground wire and binding post.
2. When jacking up the front end or back end with lifting jack, be sure first to aim the lifting jack at the central position of front suspension or rear axle housing, then to bear a vehicle, see Fig. 1.1-3, Fig. 1.1-4.
3. When repairing a vehicle after its front end or back end, be sure to put a safe dais under carriage to bear the body firmly, see Fig. 1.1-5, Fig. 1.1-6.

Note: When putting safe dais under carriage, prevent the safe dais from bumping or contact the parts of carriage (such as fuel pipe). Triangle bolster should be put under the front and back sides of left and right wheels that are not jacked up, to prevent a vehicle from moving forward and backward

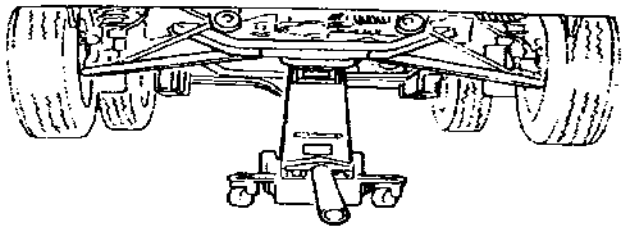

Fig. 1.1-3 Sketch of jack used in back side

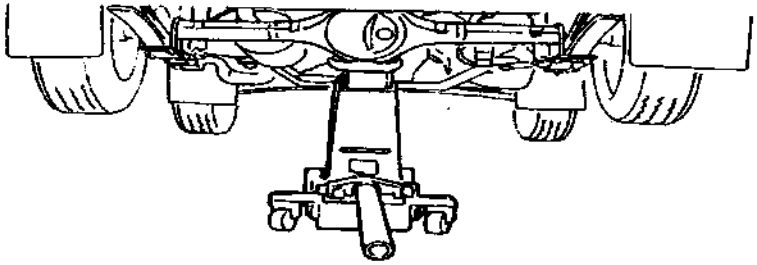

Fig. 1.1-4 Sketch of jack used in front side

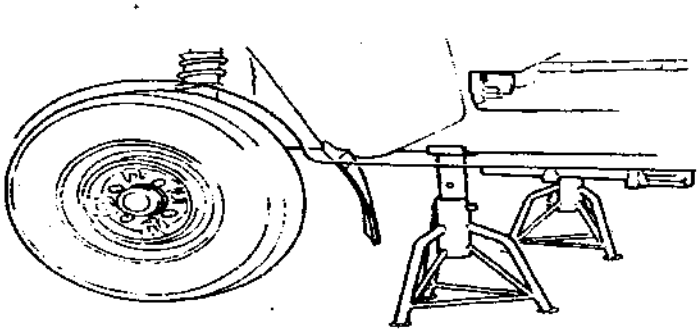

Fig. 1.1-5 Sketch of safe bench placed in front side

https://truckmanualshub.com/

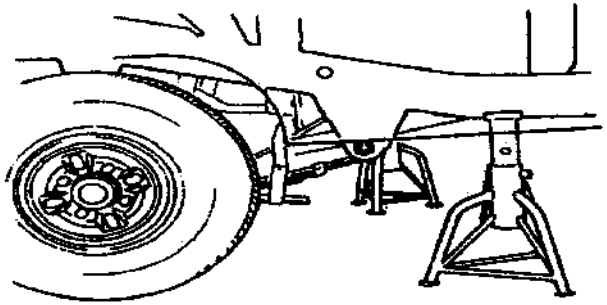

Fig. 1.1-6 sketch of safe dais put in back side

4. When lift a vehicle with a lifting rack, guarantee that lifting arm does not contact to brake pipeline, fuel pipeline, bracket or any other parts.

The lifting position of listing rack and listing arm on a vehicle is shown as Fig. 1.1-7, Fig. 1.1-8. When the vehicle raises four wheels separating from the ground, try to drive the body from two sides, after it is confirmed that the vehicle may not drop, the reparation begins.

After the vehicle is raised, the lifting rack should be locked.

Fig. 1.1-7 Front end bearing position

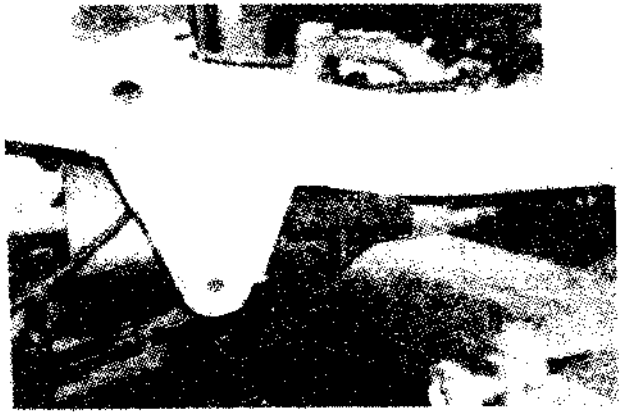

Fig. 1.1-8 Back end Bearing position

5. When repairing, disassembled parts must be placed a complete set after a complete set or in order with pallet, tray or bulkhead, to avoid in a mess or in wrong position.

6. Each bolt must be installed in original position. The bolts or nuts with specified screw-down moment should be screwed down with torsion spanner instead of yourself feeling.

7. The dismantled oil seal, sealing gasket and “O” hoop in disassembling had better be scrapped, new ones shall be replaced when reassembling.

8. When repairing, refer to this manual as much as possible, and operate according to the description.

https://truckmanualshub.com/

Section 2 Operation of vehicle

I. Operation description

(I) Key

Two key are provided for a vehicle (Key with code anti-theft system sees Chapter 6).

Vehicle key has the following functions:

1. To control the power supply of vehicle electrical equipment.
2. To unlock and lock vehicle door lock.
3. To unlock and lock fuel tank cap

(II) Door lock and door window

a) Front door lock

Unlocking and locking outside a vehicle, as shown in Fig. 1.2-2. Turning key clockwise can unlock left front door lock, turning key anticlockwise can unlock right front door lock, vice versa, lock the door lock.

Unlocking and locking inside a vehicle, as shown in Fig. 1.2-2. Lift inner lock button, pull inner handle, vehicle door is unlocked; shut vehicle door, press inner lock button, vehicle door is locked.

Note: When vehicle is running, inner lock button must be pressed, to avoid accidentally pulling inner handle to open the vehicle door.

The door can be locked outside vehicle without key. First, open vehicle door, press inner lock button, then lift the handle outside the door, the door is locked, as shown in Fig. 1.2-3. But outer handle should be pulled once, to affirm if the door is locked really or not .

Fig. 1.2-1 Fig. 1.2-2

Fig. 1.2-3

2. Middle door lock

When unlocking outside vehicle, pull backward outer handle, vehicle door is opened.

Unlocking and locking inside vehicle, as shown in Fig. 1.2-4. Lift inner lock button, pull backward handle, slide door is opened. Pull forward inner handle to close vehicle door, press inner lock button, vehicle door is locked.

https://truckmanualshub.com/

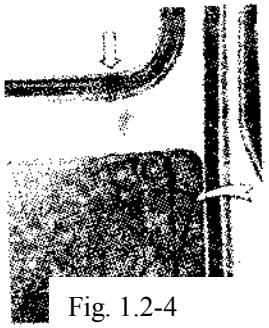

Fig. 1.2-4

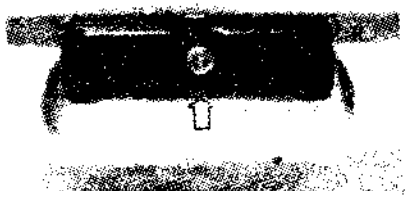

Fig. 1.2-5

Insert key into key hole, turn anticlockwise 90°, take out the key, then hold on outer handle manually, press lock cylinder with thumb and pull backward, rear door is opened; after the door is closed, insert key into key hole, turn clockwise 90°, rear door is locked.

4. Rising and falling of front vehicle door

Turn clockwise the lifting crank of right front door glass, right side glass rises; turn anticlockwise the lifting crank of left front door glass, left side glass rises, vice versa glass falls.

5. Side door window

If you want to open push side window, push the button to make the window reach the locking position. If you open push-pull side window, press button, at the same time, pull backward handle, up to the expected position.

(III) Seat and body

1. Front seat

(1) Fixing

Hang two lock hoop in seat front end on projective latch hook, press the handle up to lock-up, in this way the seat can be fixed, as shown in Fig. 1.2-6, Fig. 1.2-7.

Front seat and backrest is monolithic, so when repairing engine, the seat should be tilted. Pull back shackle, raise backrest angle modifier to make the backrest reach the most pitching position, tilt backward, then the seat can be operated.

Fig. 1.2-7

(2) Regulating back and forth

There is a control handle under the seat, lifting the handle upward can regulate the seat back and forth, see Fig. 1.2-8.

Note: When driving, do not regulate seat to prevent danger.

https://truckmanualshub.com/

Fig. 1.2-7

(3) Backrest regulation

Seat backrest is tilt able. When regulating, raise handle, select backrest angle, release the handle, the backrest is locked, see fig. 1.2-9.

2. Backseat

The second row seat can tilt a certain degree forward, in order to be easy for passengers on the third row seat to get on and get out, which is shown as fig. 1.2-10, the regulation of backrest degree is the same as the front seat.

When the third row seat needs to regulate, raise handle, make the backrest forward level, then tilt entire seat 90° 。

Fig. 1.2-10

3. Body

CA1010, and CA1010A Mini-Cargo Car Series with single row seat, The body is full metal rear body. Body safety frame is fixed on cab rear wall board, the body can be opened in three sides. Body panels are connected with self-locking catch and staple, with quick disassembling and assembly type. Pulling handle outward can make staple and catch separate to open the body; buckle staple and catch together, push handle, the body is closed and locked.

(IV) Fuel tank cap

The Oil filler of fuel tank is on the right side of vehicle. Inserting key and turning anticlockwise can lock wicket, vice versa open, see Fig. 1.2-11. After opening the wicket, turning anticlockwise fuel tank cap can open it, when turning clockwise and hearing “ka ka” sound, the fuel tank cap has been locked reliably.

(V) Seat belt

This vehicle uses automatic crimping seat belt.

When fastening seat belt, insert the tongue into the buckle, until you hear a click, it is locked. Press the red button on the buckle, the seat belt can be unfastened.

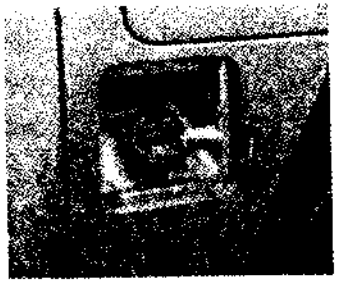

Fig. 1.2-11

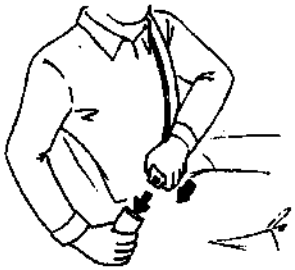

Fig. 1.2-12

https://truckmanualshub.com/

Note:

• Seat belt is designed according to human body's structure, so the user must use it on the requirement, the lower end position should not exceed abdomen, shoulder seat belt should sling over chest and shoulder.

• Seat belt should keep clean, to avoid oil, chemicals, particularly electrolyte corrosion, if it is dirtied, wash it with appropriate soap and water.

• If seat belt is damaged, please replace a new one.

• One seat belt is used only for one person, children can not use the same seat belt with their parents.

• The users do not embellish the seat belt to avoid influencing its operation performance.

(VI) Jack, spare wheel kept position

1. Jack

Put jack under left front seat. Raise seat and engine cowl, turn anticlockwise jack handle spindle to be taken out. When putting it, turn clockwise jack handle spindle to be put there, see Fig. 1.2-13.

Put jack handle spindle on the left lower side of the instrument panel, see Fig. 11.2-14.

2. Spare wheel

Open rear vehicle door, unscrew tightening bolt, then the spare wheel can be removed.

Fig. 1.2-13

Fig. 1.2-14

(VII) Instrument panel and control mechanism, see Fig. 1.2-15.(taking hard plastic instrument panel as an example)

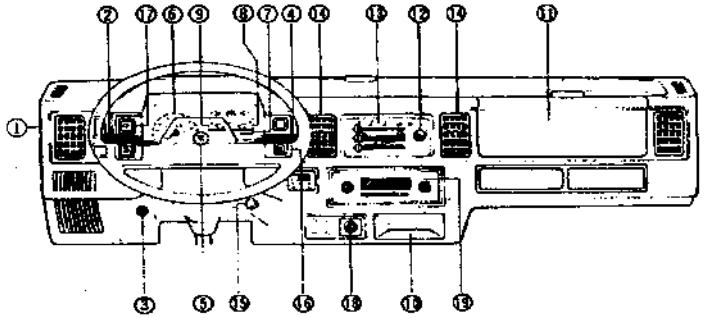

Fig. 1.2-15 Instrument

1. Braking oil tank filler 2. Lighting and turn light switch 3. Choke pull button 4. Electric wiper and washer switch 5. Alarm lamp switch 6. Odometer 7. Warning indictor lamp 8. Water-temperature gauge 9. Fuel meter of fuel tank 10. Ash tray 11. Glove box 12. Blower and air-conditioner switch 13. Air-conditioner control panel 14. Ventilating system 15. Ignition equipment 16. Fog-lamp switches 17. Selection electric part switches 18. Cigarette lighter(selection) 19. Radio cassette player

(VIII) Combination instrument, see fig. 1.2-6

1. Speedometer

Indicate the instantaneous speed of vehicle and record accumulation of miles.

2. Fuel meter of fuel tank

When ignition switch is on gear ON, fuel meter indicates the fuel quantity within fuel tank.

https://truckmanualshub.com/

When fuel gauge pointer points at F, the fuel tank is full; when it points at E, the fuel tank is nearly empty, see Fig. 1.2-17.

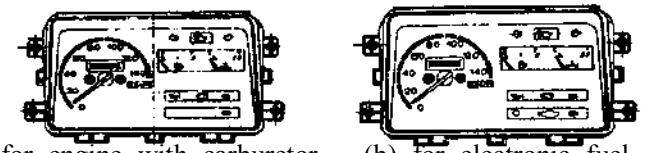

(a) for engine with carburetor (b) for electronic fuel injection engine

Fig. 1.2-16

3. Water-temperature meter

When ignition switch is on gear ON, pointer can indicate the coolant temperature within engine. When the pointer fluctuates in C section, engine water temperature is normal; when the pointer exceeds H, showing the temperature is over high, if the engine is over hot, do not continue to drive, see Fig. 1.2-18.

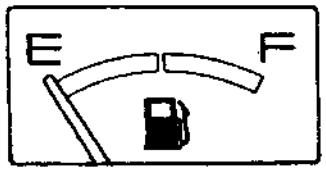

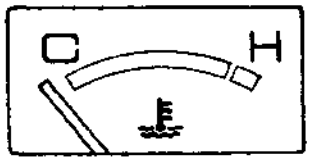

Fig. 1.2-17 Fig. 1.2-18

4. Motor oil pressure indicator lamp (red)

When ignition switch is on gear ON and the engine flameouts, indicator lamp is bright; after

The engine starts, the indicator lamp should black out. If the engine starts the lamp is still bright or the lamp is lightened during running, showing engine lubricating oil pressure is deficient, it should be repaired immediately, see Fig. 1.2-19a.

5. Charge indicator lamp (red)

When ignition switch is on gear ON and engine flameouts, indicator lamp I bright; after the engine starts the lamp should black out. If the engine starts the lamp is still bright or the lamp is lightened during running, showing the engine has not charged up to battery or circuitry fault appears, it should be repaired immediately, see fig. 1.2-19b.

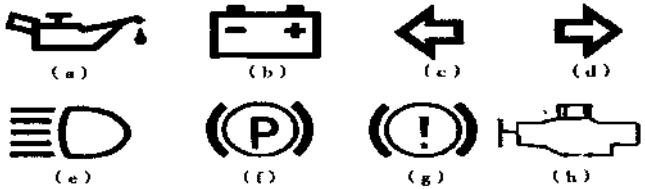

Fig. 1.2-19

6. Left-turning indicator lamp (green), see Fig. 1.2-19c.
7. Right-turning indicator lamp (green), see Fig. 1.2-19d.
8. Distant light indicator lamp (blue), see fig. 1.2-19e.
9. Parking indicator lamp (red), see fig. 1.2-19f.
10. Braking fluid alarming lamp (red).

When ignition switch is on gear ON and engine flameouts, indicator is bright; after the engine starts, the lamp should black out.

https://truckmanualshub.com/

If the engine starts the lamp is still bright or the lamp is lightened during running, showing the braking fluid in fuel tank is deficient, please fill it. If the braking fluid is filled out, the lamp is still bright, the braking system should be repaired, see Fig. 1.2-19g.

11. (Electronic fuel injection engine) Engine fault alarming lamp (red)

When ignition switch is on gear ON, and engine flameouts, alarming lamp is bright; after engine starts, the lamp should black out. If the engine starts the lamp is still bright or the lamp is lightened during running, showing electric injection system has fault, it should be sent to maintenance shop to repair immediately, see Fig. 1.2-19h.

(IX) Ignition switch

Ignition switch has 4 gears, as shown in Fig. 1.2-20.

1. OFF gear: Key can be taken out and inserted only in this position, and the power supply of engine and auxiliary units is cut off.
2. ACC gear: When key is on this position the power supply of electric components is switched on, electric equipment such as radio cassette play can be used.
3. ON gear: Turn the key clockwise to the ON position, ignition circuitry is turned on.
4. ST gear: Continue to turn the key to the START position, start engine, after releasing, the key automatically return to the ON position.

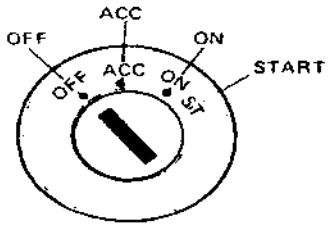

Fig. 1.2-20

Note:

• Starting engine does not exceed 5 seconds each time, if the engine is not started once, it must be started again after 5-10 seconds. If the engine is not successfully started many times, fuel system and ignition system should be examined.

• When engine does not work, do not put key on the ON position for a long time, otherwise, the electric energy of battery shall be consumed.

(X) Combination switch

1. Lighting switch

When lighting switch is set on the left side of steering wheel. When it is on the OFF position, turn off lighting; when turning forward to one gear, front and rear small lamp, instrument lamp and rear license lamp lighten; when turning forward further to 2 gear, front and rear small lamps, instrument lamp, and front and rear license lamps lighten, see Fig. 1.2-21(a).

2. Overtaking signal lamp, steering lamp switch

Handle is in non-working state when it is on middle position. Push forward the handle to lighten right-turning lamp; pull backward the handle to lighten left-turning lamp; raise the handle to lighten overtaking signal lamp, release the handle to return automatically to middle position, overtaking signal lamp black out.

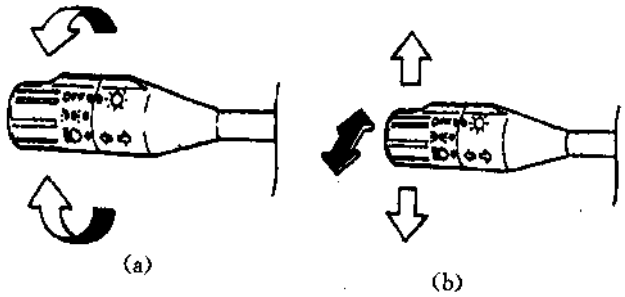

Fig. 1.2-21

https://truckmanualshub.com/

3.High/low beam switch of far-reaching lamp and near-field lamp
Put lamplight switch on gear 2 position. When the handle is on middle position, near-field lamp is bright; press the handle, to make the handle be in lower side position, far-reaching lamp is bright, see Fig. 1.2-22.
4. Windshield wiper and washer switch
It is set on the right side of steering wheel. Wiper switch has 3 gear positions, turning to the INT position is intermittent gear, to the LO position is lower speed gear, to the HI position is high speed gear, to the OFF position , the wiper is turned off, see Fig. 1.2-23.
Windshield washer and wiper both use one control handle. When the handle is raised the power is switched on, cleaning mixture spray on windshield glass; after releasing, the handle resets automatically, spray stops, see Fig. 1.2-23.

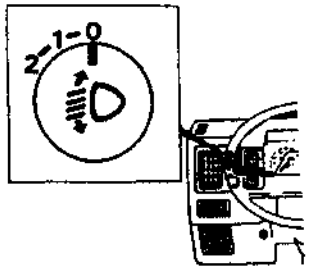

Fig. 1.2-22

Fig. 1.2-23

Rear windshield wiper, washer switch is on instrument panel; the type is shown in Fig. 1.2-24. After pressing wiper switch, rear wiper is in working state; press the wiper switch again, the wiper stops working and resets
Keep in pressing the washer button on rear wiper and washer switch, rear washer is swathed on, cleaning mixture is sprayed from injector, when releasing the button, the washer stops working.

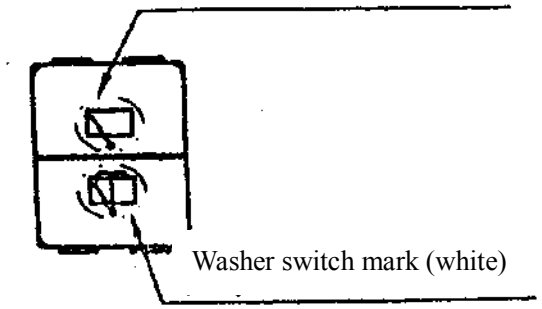

Fig. 1.2-24

Note:
(1) Spraying time per time does not exceed 5 seconds, the interval time is not less than 25 seconds.
(2) When windshield glass is dry, please do not scrape dirt with wiper, to avoid scraper and windshield are damaged.

https://truckmanualshub.com/

(XI) Horn

Horn switch is on steering panel. Press any point on the button to make the horn sound, see Fig. 1.2-25.

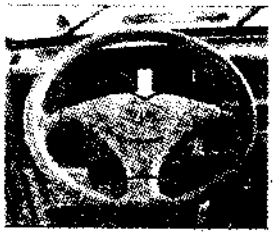

Fig. 1.2-25 Fig. 1.2-26

(XII) Indoor lamp switch

ON gear is to turn on the light, OFF gear is to turn off the light, see Fig. 1.2-26.

(XIII) Warning lamp switch

On the combination switch shell under steering wheel there is a red button, which is warning switch. When pulling out this switch, front, rear and side steering lamps are all bright, showing that this vehicle has emergency or stops to repair, to make drivers of vehicles passing by notice, see fig. 1.2-27.

(XIV) Choke pull button (carburetor engine)

When air temperature is lower, first pull out pull button, then start engine, after the engine started successfully, pull button must be pushed completely, see Fig. 1.2-28.

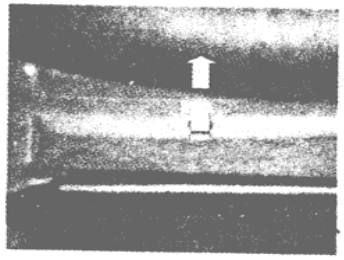

Fig. 1.2-27 Fig. 1.2-28

(XV) Glove box

Pulling lock button according to the direction indicated by arrowhead in Fig. 1.2-29 can open glove box; pushing the glove box door slightly may shut the glove box door.

(XVI) Cigarette lighter and ash tray

When ignition switch is on the ON gear or ACC gear, cigarette lighter can be used. When wanting to light cigarette, push according to the arrowhead direction, after several seconds, the cigarette lighter shall exit automatically along “ chattering” sound, pull out it to light cigarette.

Note: After thirty seconds when pushing, it is not ejected yet, showing cigarette lighter has fault, at that time the cigarette lighter should be pull out to repair.

Pulling out outwards slightly can pull out ash tray. The ash tray needs to be cleaned, first press the board on the ash tray pulled out, then pull outward slightly, the whole ash tray can be pulled out to clean. After cleaning, push it inwards slightly forcibly, it is in right position, see Fig. 1.2-31.

https://truckmanualshub.com/

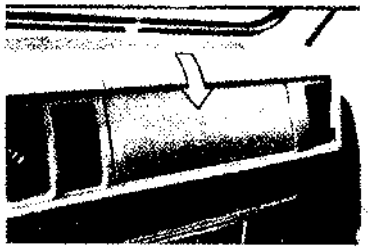

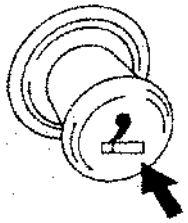

Fig. 1.2-29 Fig. 1.2-30

(XVII) Sun screen

When the vehicle runs in face of the sun, pull sun screen downwards to your requiring position to keep glaring sunlight out; after using it, push it to the original position, see Fig. 1.2-32.

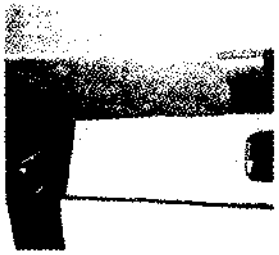

Fig. 1.2-31 Fig. 1.2-32

(XVIII) Ventilation unit

There are 6 ventilation orifices. Pull 4 adjustable grilles, adjust blown air current direction to your satisfactory position, and see Fig. 1.2-33, 1.2-34.

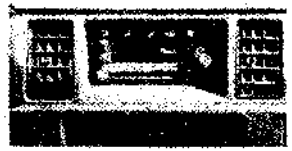

Fig. 1.2-33 Fig. 1.2-34

(XIX) Air-conditioner and heater unit

1. Name and function

As shown in Fig. 1.2-35.

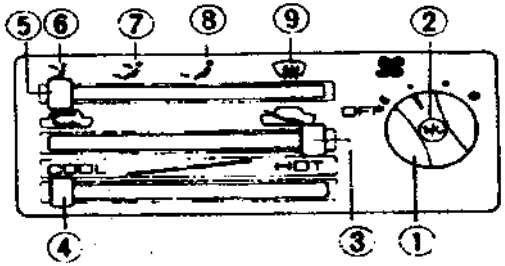

Fig. 1.2-35

https://truckmanualshub.com/

① Heater unit switch: There are 4 gear positions, which are used for controlling heater unit power supply and heater unit rotation speed.
② Air-conditioner switch: A/C, ON-OFF) Pressing heater unit switch and rotating can make air-conditioner system running..
③ Inside and outside air conversion handle: Show air current source. Placing it on " " position is for inbreathing fresh air from the outside of the vehicle, on " " position is for inside air circulation.
④ Temperature regulation handle: Be used for switching on and switching off the coolant pipeline from engine and regulating air supplying temperature. "COOL" shows cold, "HOT" shows hot.
⑤ Conversion handle of air supply: Shows air current direction and function.
⑥ Shows blowing to upper part of the body.
⑦ Shows blowing to the upper part and leg simultaneously.
⑧ Shows blowing to leg.
⑨ Shows air current blowing to windshield glass, defrost and defog.

Move handle ⑤to⑥, move handle ④ to "COOL" position, move handle ③ to " " position, turn heater unit switch ① to your expected gear position, press A/C. ON-OFF switch ② , air-conditioner shall start working.

Note: When handle ③ is turned to " " position, A/C.ON-OFF switch ② shall turn off automatically, that is, air-conditioner shall stop working.

3. Heater control

Move handle ⑤ to your expected gear position, handle ④ to "HOT" position, handle ③ to " "position, heater unit switch ① to your expected gear position, heater unit shall start working.

4. Quick defrost control

Move handle ⑤to ⑨position, handle ④ to "HOT" position, handle ③ to " " position, turn heater unit switch to the highest gear, quick defrost can be done.

Note:

- Pre-cooling: When you park in point-blank sunlight, you should crank down vehicle window, and switch on air-conditioner for several minutes, to make the hot air in the vehicle blow out.
- When the vehicle runs in urban area, refrigeration efficiency is very low, so in this case, you should drive in low speed, to get enough cooling air.
- After air-conditioner works for a long time, carbonic acid gas or cigarette smoke can make eyes uncomfortable, at that time, the vehicle window should be opened to ventilate.

(XX) Parking braking handle

When you park, you must use parking braking. When parking braking handle is pulled up, braking action is produced on two rear wheels; pull slightly parking braking handle and press the button at the top of parking braking handle with thumb, put parking braking handle into the bottom, to relieve braking force. Different vehicle types have different parking braking handle positions, as shown in Fig. 1.2-36.

Fig. 1.2-36

https://truckmanualshub.com/

Fig. 1.2-37

(XXI) Pedal

1. Clutch pedal

Clutch pedal is used for controlling of power transferring from engine to transmission. Thread on the pedal, cut off power transfer, you can operate gear selection and gear shift; disengage the pedal, the power transfer shall be engaged. See ① in Fig. 1.2-37.

Note: When driving, do not often put your feet on clutch pedal, to avoid to cause the quick abrasion clutch and separate bearing.

2. Braking pedal

Threading on the pedal can produce braking force on four vehicle wheels. See ② in Fig. 1.2-37.

Note:

- Rain and snow road surface shall influence braking effect.
- If squeal appears in braking process, brake should be repaired.
- If braking pedal is suddenly threaded to a lower position, or thread like on sponge, or braking distance gets long, braking system should be repaired.

3. Accelerator pedal

Accelerator pedal is used for controlling throttle opening. When driving, thread on accelerator pedal, engine rotating speed increases, and power output and vehicle speed increase too. See ③ in Fig. 1.2-37.

(XXII) Gearshift handle

All gear positions of 5-gear type transmission are shown in Fig. 1.2-38. For 4-gear type transmission, positions of the first, second, third and fourth gears and reverse gear are all the same as the positions in the figure.

Note: When the vehicle is going forward, reverse gear cannot be shifted into, when going astern, advance gear cannot be shifted into. Shift of advance gear and reverse gear should be carried out after the vehicle stops.

Fig. 1.2-38

II Examination and breaking-in of new vehicle

(I) Examination and breaking-in of new vehicle

The user should examine the following items after receiving a new vehicle:

1. Connection and tightness of all positions, particularly transmission, steering, braking, suspension and wheel, etc.
2. Liquid level of radiator and its compensation bucket.
3. Oil level of engine, transmission and rear axle.
4. Presence or absence of blow-by, water leak and oil leak.
5. Liquid level of accelerator.
6. Tire pressure.
7. Installation of engine accessories and tightness of transmission belt.
8. Operating state of electric equipment, lamplight, horn and instrument.
9. Operating state of braking system and the presence and absence of oil leak on all pipeline joints, and examine the liquid level of braking oil tank.
10. Operating state of clutch.
11. Normal or abnormal of steering mechanism.

https://truckmanualshub.com/

12. Presence and absence of abnormal sound of engine and transmission system.
13. Driver tools and accessories are complete or not.
(II) New vehicle breaking-in
The operating life, working reliability and using economical efficiency of a vehicle depend greatly on earlier operating conditions. Before a new vehicle is driven normally, it must pass a breaking-in stage, that is, let the vehicle run at little load and low speed, to make parts adaptation have a stage of breaking-in, so as to improve their surface quality and combination precision, to avoid earlier abrasion.
The breaking-in mileage of new vehicle is 1000km. If the condition is permitted, had best to extend breaking-in mileage to 2500km.
The following regulations should be conformed to during breaking-in stage:
1. Drive on flat and good road surface.
2. Avoid quick start, rapid acceleration and fast pull-up.
3. Control strictly vehicle speed, all gear speed does not exceed specified value (see Table 1.2-1).

Running mileage (km)	Vehicle speed not exceeding (km/h)				
	Gear 1	Gear 2	Gear 3	Gear 4	Gear 5
0-200	13	22	34	48	64
200-800	13	22	34	48	64
800-1500	20	33	51	73	97
1500-2500	27	44	69	95	105

Note: For 4-gear transmission, refer to the speed limitation of the first 4 gears.
4. Within 200km of initial running, the vehicle must run emptily; during 200-1000km period, persons carried by the vehicle (loading weight) do not exceed 70% of specified number (loading weight).
5. Particularly ay attention to engine water temperature and engine oil pressure.
6. Often check the temperature of wheel hub and braking drum, regulate them when it is necessary.
7. When running, often shift, do not run at the same gear for a long time, and do not drive at high speed
8. When breaking-in mileage reaches 500km, examine the tightness of steering system, suspension and transmission shaft, tighten when necessary, examine presence and absence of braking pipeline leakage, if have any, eliminate them in time.
During breaking-in stage, maintain according to the following contents, then operate normally.
1. Carry out maintenance according to the items after breaking-in stage (1000km) in regular maintenance.
2. Change engine, transmission and lubricating oil in rear axle.
III Fuel, coolant, lubricating oil and grease
(I) Fuel
90#(GB17930-1999) unleaded gasoline for vehicle should be used.
Note: Vehicle with electronic fuel injection engine should use 93#(GB17930-1999) unleaded gasoline for vehicle.
(II) Coolant
Please use antifreeze solution all year. The type of domestic antifreeze solution is ethanediol water-type antifreeze solution. The using principle is that the freezing point of antifreeze solution is 5℃ lower than the lowest air temperature of local temperature. Antifreeze solution must be changed once every two years.
(III) Braking fluid
Use 9208 braking fluid.
(IV) Grease of lubricating oil
1. Lubricating oil

Engine	10W/30 SE(GB11121-1995) gasoline engine oil
Transmission	85W/90 GL-4 or GL-5 grade gear oil or 18# hyperbole gear oil
Rear axle	80W/90 (GB13985-92) hyperbole gear oil

2. Chassis grease
Lithium-base grease

https://truckmanualshub.com/

Section 3 Service and maintenance of vehicle

1. Routine maintenance

Routine maintenance means daily maintenance before departure and after traveling, is the foundation of regular maintenance. Taking cleaning and observation as the key. Besides washing inside and outside body, cleaning glass, the main contents are:

1. To check the normality or abnormality of lighting, instrument, wiper, brake, steering and suspension and so on.
2. To check the presence and absence of abnormal sound of engine and chassis.
3. To check the presence and absence of leakage of water, oil and gas; and leakage current; whether there are enough water, fuel, lubricating oil, tire air pressure or not, if not, supplement if necessary..
4. To check whether wheel, steering, transmission and suspension are connected tightly or not.
5. Eliminate the fault of the day.

II. Schedule of regular service and maintenance

https://truckmanualshub.com/

Time interval: Number of months or kilometers, whichever comes first		Mileage (X1,000km)	1	10	20	30	40	50	60
		Number of month (Month)	Breaking-in period	6	12	18	24	30	36
Engine	Fan belt : degree of tightness, damage		J • T		J • T • G		G		J • T • G
	Timing belt: degree of tightness, damage		J • T • G		J • T • G		J • T • G		J • T • G
	Valve clearance		J • T		J • T		J • T		J • T
	Cylinder head, intake and exhaust manifoldbolt: degree of tightness		N		N		N		N
	Engine oil filter		G	G	G	G	G	G	G
	Engine oil		G	Every 5000 km, replace once					
	Coolant		J • B	J • B	J • B	J • B	G	J • B	J • B
	Cooling system hose and joint: leakage, damage, degree of tightness		J • T • G						
	Exhaust pipe and accessories: leakage, damage, degree of tightness		J • T • G		J • T • G		J • T • G		J • T • G
Ignition system	High voltage wire: worsening, damage		J • T • G		J • T • G		J • T • G		J • T • G
	Distributor cap and distributor arm: abrasion, fracture		J • T • G		J • T • G		J • T • G		J • T • G
	Spark plug		J • T • G	R	J • T • G	R	J • T • G	R	J • T • G
	Ignition timing		J • T • G	G	G	G	G	G	G
	Ignition advance unit		J • T	J • T	J • T	J • T	J • T	J • T	J • T
			J • T		J • T		J • T • G		J • T • G
Fuel system	Air filter core		Q	Q	Q	Q	G	Q	Q
	Throttle stay and carburetor shaft		Every 10000km , I.T.R.G						
	Fuel pipe and joint: leakage, damage		J • T • G				J • T • G		
	Gasoline filter						G		
	Idle and idle mixture		J • T		J • TT		J • T		J • T
	Crankshaft box ventilation hose and connector		J • T		J • T • G		J • T • G		J • T • G
	PCV valve		J • T		J • T • G		J • T • G		J • T • G
	Fuel evaporation control system hose and connector		J • T				J • T • G		
Electric equipment	Harness and lighting fitting					J • T			
Chassis and body	Clutch pedal free travel		J • T		J • T		J • T		J • T
	Brake drum and friction burr, brake disc and brake tongs: abrasion, damage		J • T				J • T • G		
	Braking pipe: leakage, damage		J • T				J • T • G		
	Braking fluid		J • B		J • B		G		J • B
	Braking pedal free travel		J • T	J • T	J • T	J • T	J • T	J • T	J • T
	Braking rod and stay: travel, damage		J • T	J • T	J • T	J • T	J • T	J • T	J • T
	Tire: abrasion, pressure		J • T	J • T	J • T	J • T	J • T	J • T	J • T
	Wheel, wheel nut: damage, degree of tightness		J • N	J • N	J • N	J • N	J • N	J • N	J • N
	Absorber : oil leakage, damage		J • T		J • G		J • G		J • G
	Drive-shaft		J • T		J • G		J • G		J • G
	Transmission and rear axle: oil leakage, oil level		G		J • T • G	J • T • G	G	J • T • G	J • T • G
	Steel plate spring			J • T • G	R		R		R
	Steering: degree of tightness, damage, noise		J • T		J • T • G		J • T • G		J • T • G
	Door hinge				R		R		R
	Test drive		Carry out test drive after each maintenance						

Note: Letters in the table stand for meanings, B—supplement, J—check ,T—regulate, Q—clean, sweep, R—lubricate , G—replace(If it coexists with other items replace if necesary)

https://truckmanualshub.com/

III. Service and maintenance items

(I) Engine

1. Water pump(fan) belt

(1) Check and adjustment

1) Check the presence and absence of crack, break, distortion, abrasion and cleanliness of belt. Check belt tension force. Press the belt with thumb(about 10kg force), if it bends 6-9mm, show the tension force is appropriate, as shown in Fig. 1.4-1.

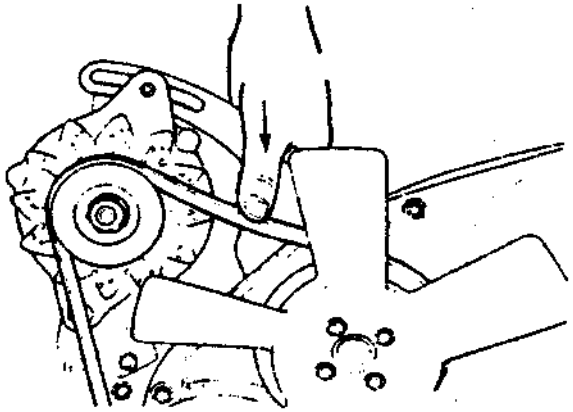

Fig. 1.4-1

2) If the belt is too tight or too loose, adjust alternator location to make its tension force to the specified value.

3) Unscrew alternator adjusting bolt and generator fixing bolt, move the generator, to adjust the belt tension force to the specified value. See Fig. 1.4-2.

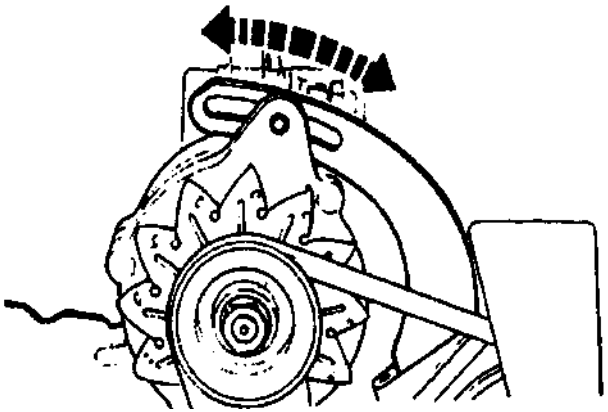

Fig. 1.4-2

4) Screw down alternator adjusting bolt and generator fixing bolt.

Note: All checking and adjusting work mentioned above must be done in the state that the engine stops running.

(2) Replacing belt

1) Unscrew alternator adjusting bolt and generator fixing bolt, and move alternator towards inside.

2) Change belt.

3) Move alternator towards outside, and adjust the belt to the specified tension force.

4) Screw alternator adjusting bolt and generator fixing bolt.

Note: All adjusting work mentioned above must be done in the state that the engine stops running and radiator temperature is lower.

https://truckmanualshub.com/

2. Valve clearance
(1) Dismount valve cover.
(2) Check the valve clearance of air intake and exhaust, and adjust if necessary.
Standard valve clearance: 0.13-0.18mm (when the engine is cool), 0.23-0.28mm (when the engine is hot).
(3) Install valve cover, and screw bolt to specified torque.
3. Engine bolt
(1) When checking cylinder head bolt, valve cover must be dismounted. The tightening torque of cylinder cover bolt is 55-60 N • m(5.5-6.0kg•m).
(2) When fastening cylinder head, cylinder gasket should be under the even stress. The sequence of screwing bolts is shown in Fig. 1.4-3.

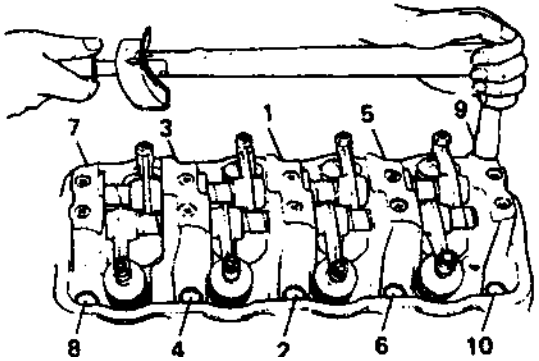

Fig. 1.4-3

(3) The tightening torque of cylinder cover bolt is 4-5 N • m (0.4-0.5kg•m).
(4) Check the fitted tightness of air intake and exhaust branch nut, and screw it to the specified torque if necessary. See Fig. 1.4-4.

The tightening torque of exhaust branch nut: 18-23 N •.M (1.8-2.3kg.m).
The tightening torque of air intake branch nut: 18-23 N • m (1.8-2.3kg• m).

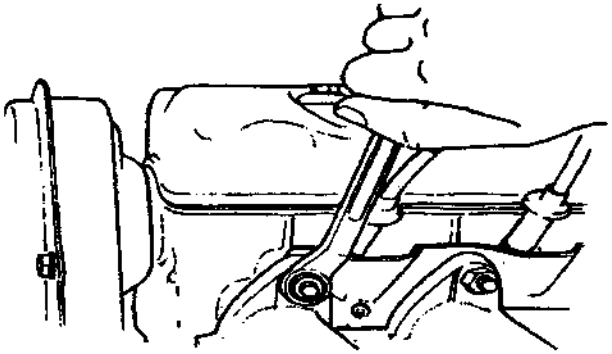

Fig. 1.4-4

4. Engine oil cleaner replacement
(1) Unscrew engine oil cleaner with engine oil cleaner handle.
Note: Before equipping new engine oil cleaner, “O” ring must be daubed oil (engine oil can be used).
(2) Turn new cleaner with hand into cleaner connection frame until cleaner “O” ring contact to installation surface.
(3) Turn 3/4 circles more with engine oil cleaner handle.

https://truckmanualshub.com/

Note: in order to prevent oil leakage, it is necessary to guarantee the engine oil cleaner screwed tightly, but it is not over tight.

(4) After installing engine oil cleaner, start engine to check whether there is oil leakage.

(5) replacement of engine oil

Before discharging engine oil, first check whether the engine leaks oil. If there is oil leakage, first repair oil leakage position before carrying out the following work.

(1) Remove discharge screw plug, to discharge all oil.

(2) After engine oil is discharged, wipe up discharge screw plug and plug hole, then reinstall discharge screw plug, and screw it tightly. The tightening torque : 20-25 N • m(2.0-2.5kg•m).

(3) Screw off the engine oil filler cap on the valve cover to fill engine oil, until the oil level reaches the mark position on oil level gauge(between the lowest and the highest).

Engine oil capacity table

Oil under pan capacity	3.0L
Engine oil cleaner capacity	0.2L
Other	0.3L
Total	3.5L

6. Replacement of engine coolant

Note: In order to avoid scald, when the temperature of engine and radiator is high, do not remove radiator cap, at that time if removing the radiator cap, coolant and vapor shall eject under the pressure effect.

(1) After engine is cooled, remove radiator cap.

(2) Remove radiator discharge orifice cock to discharge coolant, as shown in Fig. 1.4-6.

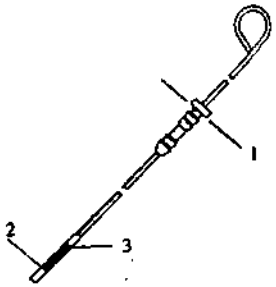

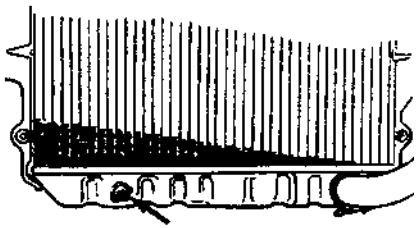

Fig. 1.4-5 Fig. 1.4-6

1.Reference line 2. Low level line 3. Full level line

(3) Dismount hydraulic accumulator ①, empty liquid. See Fig. 1.4-7.

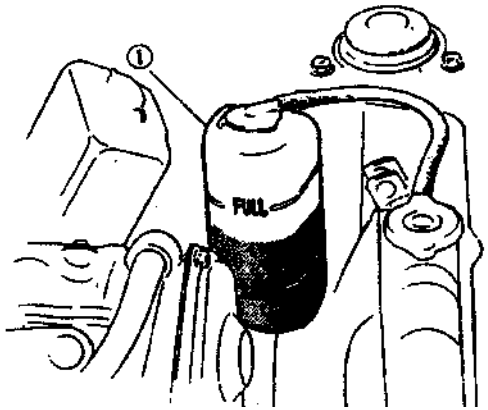

Fig. 1.4-7

https://truckmanualshub.com/

(4) Screw discharge orifice cock, and install the hydraulic accumulator at the original position.
Fill up coolant into radiator, and run engine at idle speed, until affirm that engine coolant pass through one large cycle at least, then stop running engine. After temperature drops, fill up the radiator again, cover the radiator cap and screw it.
(5) Pour coolant into hydraulic accumulator and make liquid level reach to "FULL" mark
Coolant capacity table

Engine, radiator and heater	3.4L
Hydraulic accumulator	0.6L
Total	4.0L

7. Cooling system hose and joint
(1) Check visually the presence and absence of leakage or chap, break of cooling system hose. Check whether they are damaged or not, and also check the tightness of connecting clip.
(2) The hopes with leakage, chap, break or other damage shall be replaced. At the same time the clip that cannot maintain appropriate tightness should be also replaced.
8. Exhaust pipe and accessories
Note: In order to avoid scald, when the temperature of exhaust system is still high, do not touch it. Any relevant service of exhaust system should be done after the system is cooled.
When do regular service work or the vehicle is lifted due to other service, check exhaust system according to the following steps:
(1) Check the presence and absence of damage, aging and over distortion of rubber parts.
(2) Check the presence and absence of leakage, connection looseness, hollow and damage of exhaust system. If bolts or nuts are loose, screw them to specified torque.
The tightening torque: exhaust pipe nut: 35-45N • m(3.5-4.5kg•m)
Exhaust pipe bolt: 35-50N • m(3.5-5.0kg•m)
(3) Check the presence and absence of damage, leakage, cracking, looseness of the position near the body, and the condition that makes exhaust infiltrate the inside body.
(4) Any bad cases must be resolved immediately.
(II) Ignition system
1. Ignition circuitry (secondary wire)
(1) Check whether secondary wire is broken, and the connection is firm or not.
(2) Measure resistance value of secondary wire.
The resistance value of secondary wire: Standard---16 kΩ/m
Operation limit---20 kΩ/m
(3) Replace aged secondary wire.
Note: Check every secondary wires, to guarantee that their ends are inserted firmly into joint elements. Any burned jointer must be replaced.
2. Distributor cap and distributor arm
(1) Check whether distributor cap is broken or not.
(2) Check whether center electrode and connector are abraded, the position is shown in Fig. 1.4-8.

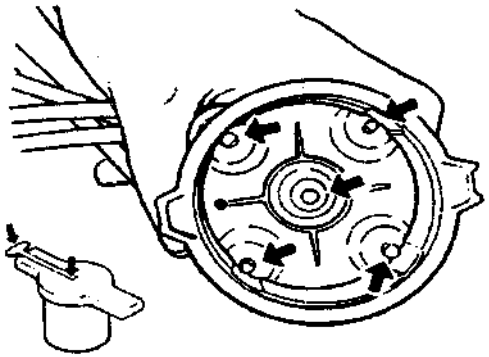

Fig. 1.4-8

https://truckmanualshub.com/

(3) Check whether distributor arm is broken, and electrode is abraded.

(4) If you find the bad cases mentioned above, please repair or replace them if necessary.

Note: If there is dust or dirt on the inside distributor, wipe up them with soft cloth.

3. Replacement of spark plug

(1) Dismount secondary wire from spark plug. Note that the spark plug cap (protective sleeve) on secondary wire should be held, pull out secondary wire, as shown in Fig. 1.4-9.

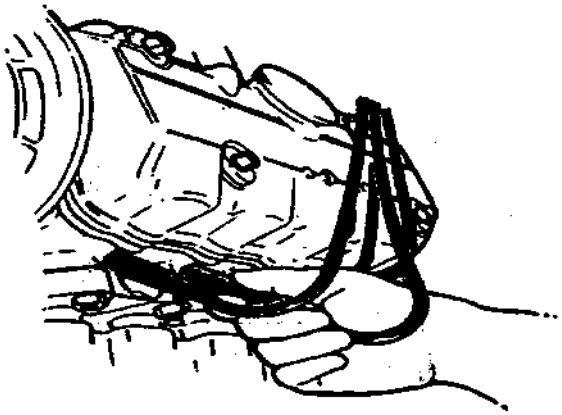

Fig. 1.4-9

(2) Loosen spark plug with spark plug spanner, and remove it.

Note: New spark plugs which conform to specific calorific power range and size must be replaced (refer to engine manual).

(3) Install new spark plug, and screw the spark plug to the specified torque.

The tightening torque of spark plug : 20-30N • m(2.0-3.0kg • m).

(4) Aim secondary wire at spark plug, and insert it, do not push the flexible wire part, push the protective sleeve part.

4. Ignition timing check

Check ignition timing to guarantee its correct set. If it does not conform to the specified value, it should be regulated.

For relevant check and regulating steps, please refer to engine manual.

5. Distributor ignition advance unit

Check whether ignition advance unit operate normally. For relevant check steps, please refer to engine manual.

(III) Fuel system

1. Clearing and replacement of air filter cartridge

(1) Dismount air filter cover.

(2) Take out filter cartridge from filter. bowl

(3) Clean the filter cartridge or replace new one. When cleaning the filter cartridge, use compressed air to blow off dust from the inside filter cartridge. See Fig. 1.4-10.

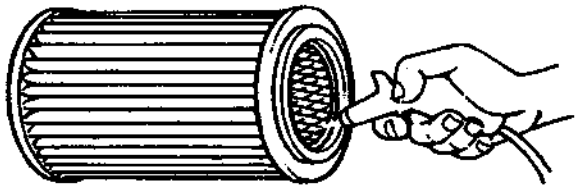

Fig. 1.4-9

https://truckmanualshub.com/

(4) Equip filter cartridge into air filter bowl.

Note: After the vehicle runs in dusty area, check whether filter cartridge is full of dust, if it is, it must be cleaned.

(5) Cyclone duster

Dismount dust pocket from cyclone duster, and clear off the inside dust pocket, as shown in Fig. 1.4-11.

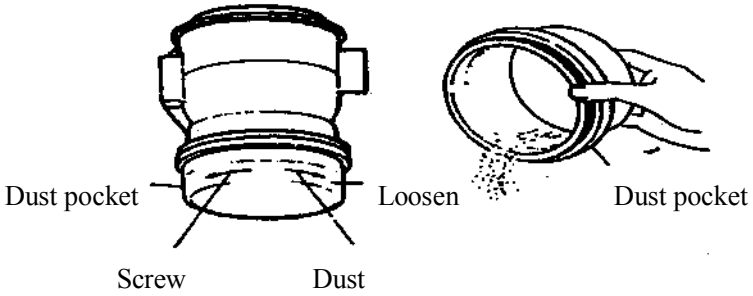

Fig. 1.4-11

Throttle cable, choke cable and throttle shaft

Lubricate rotation position, and guarantee when choke pull button is pulled, every parts of choke system operate smoothly.

3. Fuel tank, fuel pipeline and connector

(1) Check visually the presence and absence of oil leakage of fuel pipeline and connector, check the presence and absence of hose chap and break, at the same time check the tightness of all clips

The hose with break possibility must be replaced.

(2) Check visually the gasket of fuel tank cap. If there are cases of abrasion, break and distortion, replace the gasket.

4. Replacement of gasoline filter

Filter must be replaced regularly. The replacement method is as follows:

(1) Disconnect the inlet and outlet hoses of filter, and dismount the filter from the vehicle.

(2) Install a new one in place, and connect the inlet and outlet hoses to the filter.

Note: For gasoline filter for carburetor engine, the upper side is for connecting the outlet tube and the lower part is for connecting inlet tube. See Fig. 1.4-12

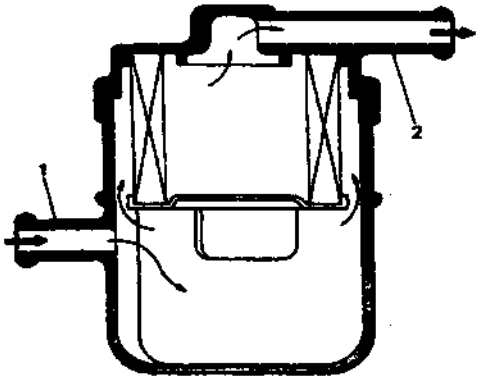

Fig. 1.4-12

1. Inlet 2. Outlet

5. Engine idle and idle mixture

Check idle and idle mixture, and regulate if necessary.

https://truckmanualshub.com/

For the check and regulation steps of idle and idle mixture, refer to operation manual on engine.

(IV) Exhaust pollution control system

Crankcase ventilation hose and connector

Check the presence and absence of leakage and break of crankcase ventilation hose. If there is any bad case, repair or replace it. Check hose connector to guarantee its tightness and firmness.

2. PCV (forced ventilation of crankcase) valve check

(1) Dismount the hose connecting tee joint to PCV valve.

(2) Start engine. Engine shall run at idle; press one end of the hose with thumb to check the negative pressure in the hose. If the hand is gripped by the hose, showing that PCV valve is in good state, as shown in Fig. 1.4-13.

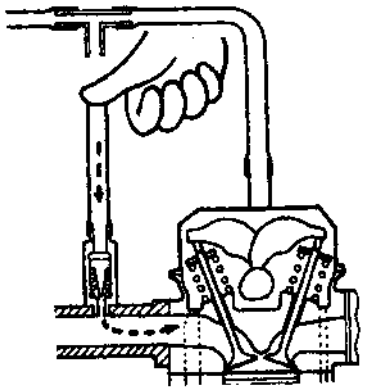

Fig. 1.4-13

(2) Stop engine running, and connect the hose on the tee joint.

3. Fuel evaporation control system

1) Check the presence and absence of crack, damage or over bending of the hose, check whether all clips are damaged.

2) If you find any bad cases, repair and replace them.

3) Refer to engine manual to check the vapor channel of activated charcoal container.

(V) Electric equipment

1. Lamplight

Check whether all lamps work normally, if is necessary, repair or replace relevant parts.

2. Harness and connector

(1) Check whether all wires are damaged, connectors are connected well.

(2) All clamps and clips must clam harness firmly.

(3) The wires in bad state should be replaced.

(VI) Chassis and body

1. Check of clutch pedal free travel

(1) Check clutch pedal free travel.

Free travel: 20-30mm.

(2) Daub grease on hook and connect positions of clutch stay.

2. Brake disc, brake tongs brake drum and brake shoe

(1) Brake disc and brake tongs

Dismount wheel and clamp, but do not make brake hose separate clamp.

2) Check the presence and absence of over abrasion, damage and distortion of brake tongs and brake disc of front disc brake. Replace relevant parts if necessary.

When reinstalling, it should be noted that bolts are screwed to the specified torque.

(4) Brake drum and brake shoe

1) Dismount wheel and brake shoe

https://truckmanualshub.com/

2) Under the condition that wheels and brake drum are dismounted, check whether brake drum and friction facing is over-abraded, whether brake wheel cylinder leaks oil. Replace relevant parts if necessary.

3. Brake line check

Check whether brake hose and oil pipe are clamped correctly, there are oil leakage, crack, gall and other damage. Replace relevant parts if necessary.

Note: After replacing any brake line or hose, be sure to discharge air in the system.

4. Check and replacement of brake fluid

(1) Check whether there is leaked brake fluid around brake master cylinder and brake oil tank. If there is oil leakage, it is necessary to maintain.

(2) Check brake fluid level. If brake fluid level is lower than the lowest fluid level, it is necessary to compensate brake fluid.

Note: The brake system of the vehicle has been fill composite type brake fluid in the factory, so do not pour other types of fluid or mix other types of fluid. Do not use old or used brake fluid, and the brake fluid taken from unsealed container, either.

(3) Change brake fluid every two years. The steps to change brake fluid are: discharge the fluid remaining in brake system completely, then pour new brake fluid into the system, and discharge the air in the system.

For exhaust description, please refer to Section 7 of Chapter 3.

5.Brake pedal

Check brake pedal free travel.

For check steps, please refer to Section 7 of Chapter 3.

6. Parking brake lever and stay

(1) Check whether every tooth crest of ratchet plate is abraded or damaged. If there is abrasion or damage case, the abraded or damaged ones must be replaced.

(2) Pull up parking brake lever with single hand completely, to make brake act fully, while pulling brake lever, listen to the total tooth gap quantity that crawl lever passing carefully (each “chattering” sound stands for passing one tooth). If passed tooth gap quantity exceeds 8, it is necessary to regulate parking brake stay.

Parking brake lever travel: within 3-8 ratchets (when brake lever pull up in 20 kg force).

For travel measurement and parking brake regulation, refer to Section 7 of Chapter 3.

(3) Parking brake stay

Check whether brake stay is damaged, moves smoothly, if the stay shows worsening, it should be replaced.

7. Tire check and transposition

(1) Check whether tire is abraded unevenly or over abraded. If there is such case, please replace it.

(1) Check charging pressure of each tire, and regulate the pressure to the specified value if necessary.

Note: Tire charging pressure must be checked in the state of tire cooling. The specified tire charging pressure can be consulted from tire logo and this manual.

(3) Tire transposition use

About the details of the above-mentioned steps, please refer to Section 8 of Chapter 3.

8. Wheel and wheel nut

(1) Wheel felly

Check whether each wheel felly has drop, distortion and crack. The wheel felly damaged badly should be replaced.

(2) Wheel bearing

https://truckmanualshub.com/

1) Check whether front wheel bearing is abraded, caught or loose.

2) Check whether rear wheel bearing is abraded, caught or loose.

(3) Wheel nut

Check whether wheel nut is screwed, and screw is screwed to the specified torque if necessary. See Fig. 1.4-14.

The screwing torque of wheel nut: 50-80 N • m(5.0-8.0kg • m).

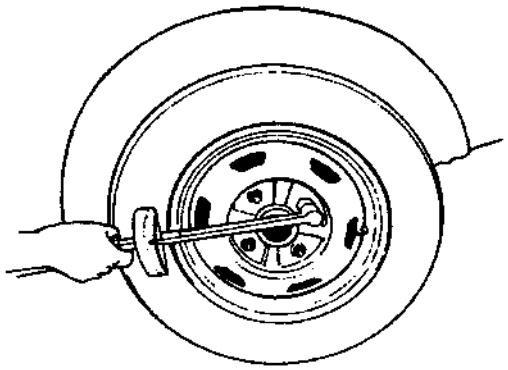

Fig. 1.4-14

9. Absorber

(1) Check the presence and absence of absorber oil leakage, hollow and other damage on sleeve; and of break and aging of upper pivot rubber lining, and rear absorber bush.

(2) Part replacement is determined according to the above-mentioned check result.

10. Transmission shaft

(1) Check whether universal joint and spline of transmission shaft is loose. If you hear “chattering” sound, damaged parts should be replaced. See Fig. 1.4-15

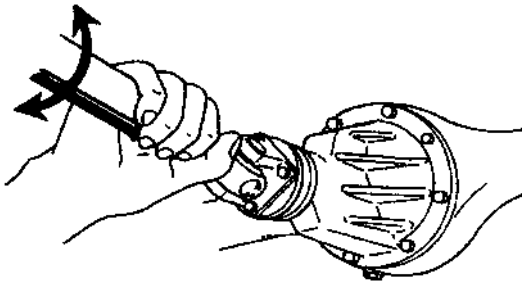

Fig. 1.4-15

(2) Check the tightness of transmission shaft bolts, and screw them if necessary

The tightening torque: 18-28 N • m (1.8-2.8 kg • m)

11. Check and replacement of gear oil

(1) Check

1) Check the presence and absence of oil leakage of transmission case and rear axle shell. If there is, repair oil leakage position.

2) When checking oil level, guarantee that the oil level is horizontal.

3) Dismount the filler plug. When inserting fingers into the filler, you can know the oil level approximately. If the oil level is close to the filler, showing that the oil filling is proper, as shown in Fig. 1.4-16.

https://truckmanualshub.com/

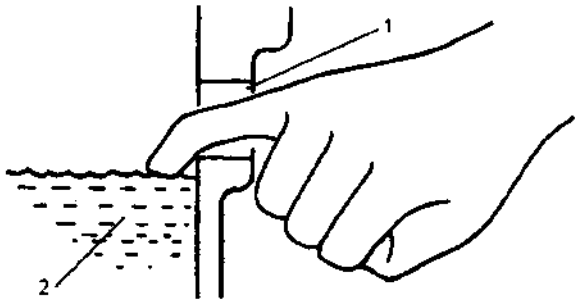

Fig. 1.4-16

1. Transmission filler 2. Transmission oil

If gear oil is deficient, fill the specified brand gear oil to the above-mentioned oil level.

4) Dismount rear axle filler plug. The oil level can be checked from the filler, the method is the same as the above, gear is deficient, please fill some.

(2) Oil replacement

Note: Before oil replacement, first check the presence and absence of oil leakage. If there is oil leakage, it is necessary to repair first , then fill specified amount of new oil.

Oil capacity: 1.3L

Oil brand: 80W/90(GB13985-92) GL-5(or GL-4) grade gear oil or 18# hyperbola gear oil.

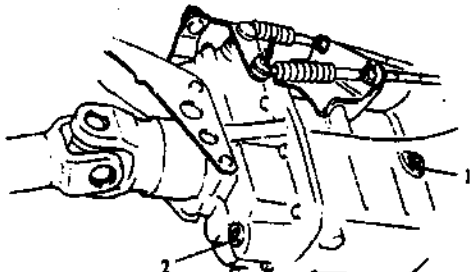

Fig. 1.4-17

1. Filler plug 2. Discharging oil screw plug

2) Rear axle

Oil capacity: 1.3L

Oil brand: 80W/90(GB13985-92) hyperbola gear oil.

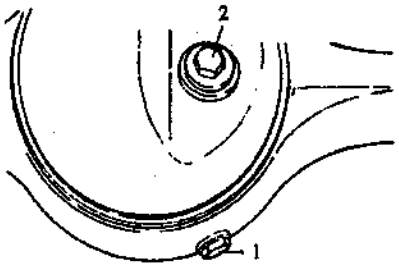

Fig. 1.4-18

1. Discharging oil screw plugs 2. Filler plug

https://truckmanualshub.com/

12. Suspension
(1) Check whether the presence and absence of abrasion and break of spring, if there is over abrasion and break case, the spring should be replaced.
(2) Check the tightness of bolt and nut, and screw them to the specified value if necessary.
13. Steering system
(1) Check the steering wheel free travel and looseness, when checking, put the vehicle on flat ground, and the wheels face right ahead.
Steering wheel free travel: 0-30mm
(2) Check whether the joint of steering shaft is loose or damaged. If there is loose or damage case, replace relevant parts.
(3) Check the tightness of bolts and nuts, and screw them if necessary.
(4) Check the presence and absence of break and other damage of dust cap of steering rack, if there is, replace them.
(5) Check whether dust cap of globular pin is damaged, if it is damaged, replaces it with a new one.
(6) Check front wheel positioning, if there is change, regulate it to the specified value.
(7) While the vehicle is running, abnormal resistance and chattering should not occur on steering wheel absolutely, if occurring, it must be repaired.
14. Lubrication of door hinge
Wipe dirt, and daub a thin layer of engine oil, open and close the door many times to guarantee the engine oil flow into axial play efficiently.
(VII) Test driving
After the regular check operation of all times mentioned above is finished, road test shall be done in safe area.

Note: When doing the following road test, it is necessary to select a safe area without passers-by and vehicle running, to avoid accident occurrence.
1. Engine start
Check engine-starting state to prepare for test.
2. Clutch
Check the following items:
- When treading on clutch pedal, the clutch should separate thoroughly
- Disengage the pedal and accelerate, the clutch dose not skid, and engage smoothly.
- Clutch itself has not abnormal sound or other abnormality.

3. Shift lever
Check whether gearshift is easy, is not caught and the shift performance of all gears is good, not shift out automatically when shift lever puts into all gears.
4. Brake
(1) Traveling brake
When driving to tread on brake pedal, check the following items:
- Braking action of brake is good.
- There is no noise from the brake.
- The braking force acted on all wheels is uniform.

(2) Parking brake
Check parking brake, when pulling up parking brake lever to make the brake act fully, guarantee that the vehicle does not skid when parking on 20% slope road.
5. Steering unit
Check steering wheel, there should not have the feeling of catching, chattering, too tight to turn in driving.
6. Engine

https://truckmanualshub.com/

- Check the engine and ensure smooth operation at different rpm
- Check the engine and ensure no abnormalities during operation

7. Body, wheel and power train

Check the body, wheels and power train, there shall be no abnormal noise, vibration and other conditions.

8. Instruments

Check the speedometer, odometer, fuel gauge and water thermometer, and ensure precision of their work.

9. Warning light of oil pressure, charging indication light, warning light of brake fluid level and warning light of engine failure

Check whether the lights turn off or not during engine running. If any one of the lights does not turn off, it shows that the corresponding part goes wrong and need to be serviced.

10. Seat belt

Seat belt can be tightly fixed in the event of emergency braking.

https://truckmanualshub.com/

Chapter II. Engine

Note: The part of engine will mainly focus on service manual. The following will only illustrate the aspects not referred in the previous part.

Section 1 Carburetor Engine Accessories

I. Oil supply system of carburetor engine

(I) Components of fuel supply system

Fuel supply system consists of fuel tank, fuel pipe, fuel filter, fuel pump, intake system and exhaust emission control devices etc. Please refer to Fig. 2.1-1.

1. Operational principle of oil supply system

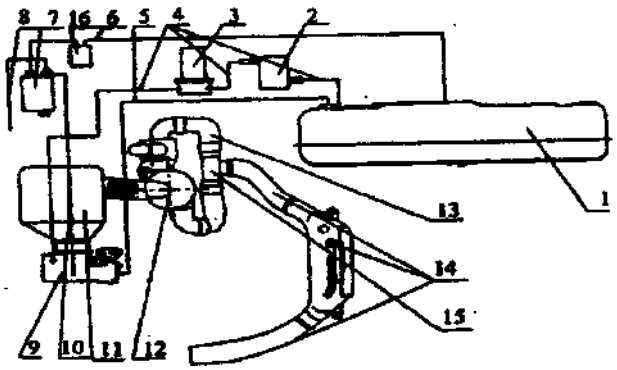

Fig. 2.1-1 operational principle of oil supply system

1. Fuel tank 2. Fuel filter 3. Fuel pump 4. Intake pipe 5. Oil return pipe 6. Exhalant pipe 7. Carbon tank 8. Vacuum tube 9. Carburetor 10. Desorption pipe 11. Air filter 12. Dirt collector 13. Cool air pipe 14. Hot air pipe 15. Intake valve 16. Gas-oil separator

When the ignition switch is in the position of ON, the oil pump begins to pump and the oil is drawn from the oil tank. After being filtered by the oil filter, the filtered oil flows to the carburetor through oil pump and intake pipe. In the event that there is much oil in the float chamber of carburetor, the oil returns to the oil pump through oil return pipe.

2. Oil tank

(1) Oil tank structure

Oil tank is seamed from sheet steel stampings. A oil volume sensor is attached to the upper center. A pouring orifice is seamed on the side, and an oil draining plug is fixed on the bottom which is used to drain deposited water and particles in the oil tank.

(2) Assembly and disassembly of oil tank

The oil tank is connected to oil tank support bolts by means of four holes in the tank body. After disassembling and draining the oil tank, the pouring rubber hose shall be taken down first, and then the wirings of oil volume sensor shall be disassembled, and the last step is to release or twist out the clamping collars of the oil pipe and return oil pipe.

3. Oil filter

Oil filter is barrel shaped and is cemented together by pressing plastic barrel body and barrel cover. Filter element is fixed in the interior, an oil feeding joint is fixed on the barrel body, and an oil out joint is fixed on the barrel cover. The oil filter cannot be disassembled, so a new filter shall be exchanged after driving 40000km (if the oil quality is not in the standard level, the specified mileage shall be appropriately shortened).

4. Oil pump

Power oil pump is attached to the right frame side rail. Please refer to Fig. 2.1-2.

(1) Power stroke

When the ignition switch is turned on, the electrical current is flowed to the coil (3) through contact switch and excited the wiring. The exciting coil (3) attracts plunger (4) and makes the pull rod (12) and diaphragm (7) move upward and downward. Thus the lower volume is increased and oil is drawn to the oil chamber (11) through oil valve (10). Meanwhile, as the pull rod moves upward and makes the upper caliper trigger the spring seat, the position of springs (15) is

https://truckmanualshub.com/

Therefore changed resulting cut off of contact switch (2) and electrical current and disposal of wiring magnetism as well. The diaphragm and pull rod are pushed downward under the force of gravity and elasticity, so oil in the oil chamber can push the oil valve and flow out of the oil pipe, the upper contact can be again connected. The process is reciprocated and pumps quantitative oil.

(1) Assembly and disassembly check

1) When failures occur in the power oil pump, the oil pipe shall be checked to see whether there exist breakage, the pump body shall be checked to ensure no leakage, and the diaphragm shall also be checked to see whether there exist cracks. Leakage shall be disposed and the cracking part shall be exchange.

2) The contact point shall be checked to ensure no ablation. If occurs, the oil stone shall be used to smooth it and make the close contact.

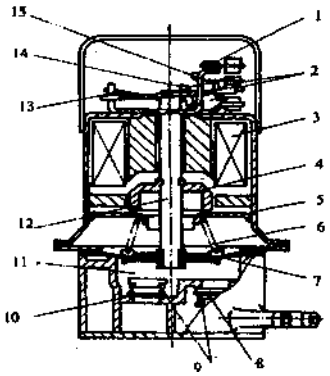

Fig.2.1-2 sketch of power pump structure

1. Contact switch 2. Contact point 3. Coil 4. Plunger 5. Pump cover 6. Spring 7. Diaphragm 8. Oil out valve 9. Oil valve spring 10. Oil feeding valve 11. Oil chamber 12. Pull rod 13. Caliper 14. Spring seat 15. Displacement spring

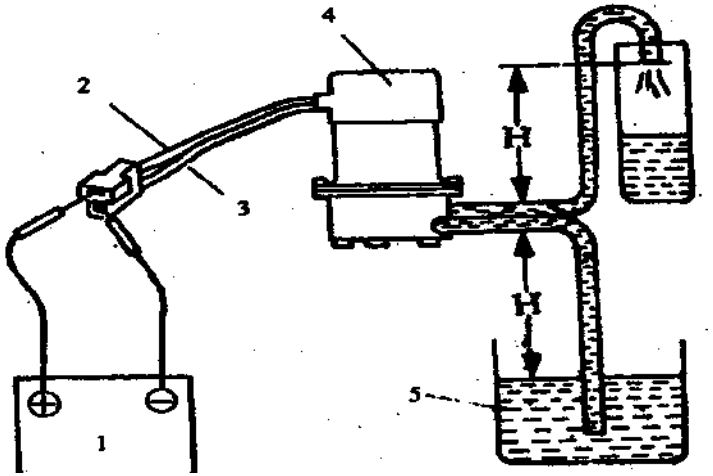

Fig. 2.1-3 Check of the power pump flow capacity

1. Battery 2. Black/ white wiring 3. Black wiring 4. Oil pump 5. Kerosene H=50cm

3) After final completion, check the power pump flow capacity according to the method referred in Fig. 2.1-3, and the flow capacity shall be more than 500ml/min.

Oil Pump (mechanical)

(1) Introduction

The pump and diaphragm assembly in the mechanical oil pump pumps petrol into carburetor float chamber. The pump and diaphragm is driven by the eccentric wheel placed on the camshaft of the engine valve mechanism, the pump rod is tightly pressed on the eccentric wheel and makes the pump and diaphragm move upward and downward. Please refer to Fig. 2.1-4.

https://truckmanualshub.com/

Oil Pump Specifications	
Discharge pressure	24.5-24.3kPa
Pump capacity	1.3L/min (200r/min)

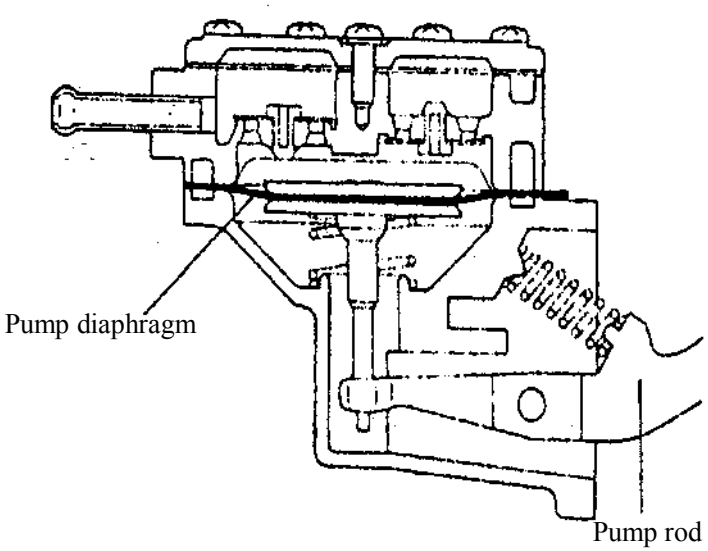

Fig 2.1-4

(2) Disassembly

As indicated in Fig. 2.1-5, the upper and lower joints shall be marked ①, to recognize the angle position of upper body ② and lower body ③. Only if angle relation is ensured, the oil circuit can be connected.

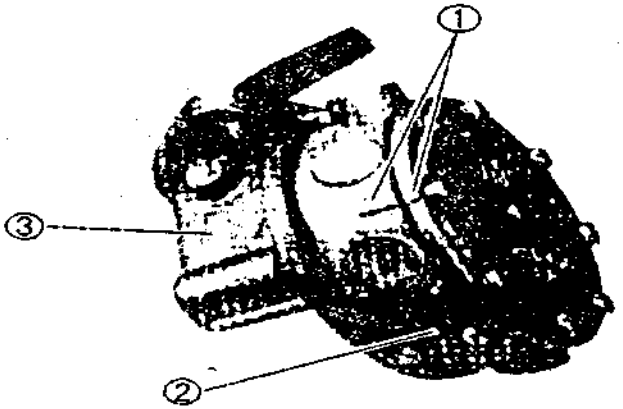

Fig. 2.1-5

(3) Check

1) Leakage of fuel pump.
2) Breakage of oil hose.
3) Tightness of all bolts.
4) The conditions of cracking and damaging of pump diaphragm after disassembly of the oil pump.

https://truckmanualshub.com/

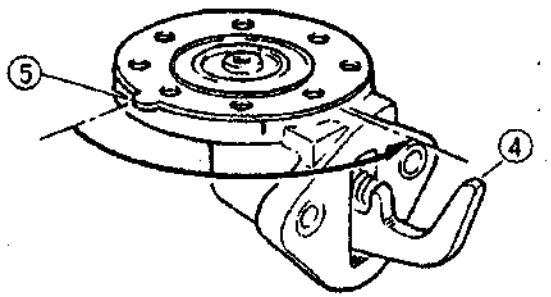

Fig. 2.1-6

(4) Assembly

1) Put the pump diaphragm on the pump rod as indicated in Fig. 2.1.-6, and then insert the pump stay into the pump rod. Swivel it 90° at the same time of pushing the pump rod, and the pump diaphragm is attached to the pump rod④ in this way.

Note: When the pump diaphragm is swiveled 90° and attached to the pump rod, the pump diaphragm tongue piece shall be on the position of pump rod ⑤. Please refer to 2.1-6.

2) Based on the relative positions of upper body and lower body which are marked before disassembly, screw eight screws.

3) Push pump rod ④ to the extreme position 4 or 5 times, and make the pump diaphragm center and pump center can be matched. Please refer to 2.1-7

4) Finally, tighten the eight screws.

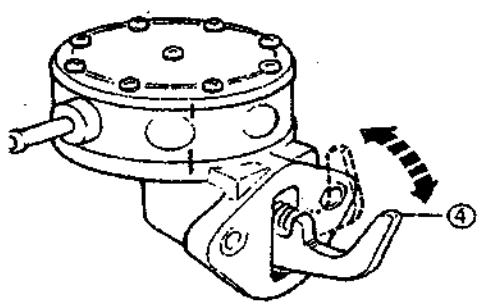

Fig. 2.1-7

(II) Intake System

1. Intake system is composed of cool air intake pipe, hot air pipe, intake valve, dirt collector and air filter etc.
2. Operational principle of intake system

The system applies dual air filtering system. As is shown in Fig.2.1-1, the switch handle on the intake valve 15 shall be turned to the side of “summer” in summer, and the fresh air will flow into the dirt collector 12 through cool air pipe 13 from the vehicle front side, and after being dusted, the dusted air flows into the air filter 11 through escape pipe. While, the switch handle on the intake valve 15 shall be turned to the summer of “winter” in winter, and the warmed up air will flow into dirt collector 12 through hot air pipe 14 from the vehicle front side, and after being dusted, the dusted air flows into the air filter 11 through escape pipe.

https://truckmanualshub.com/

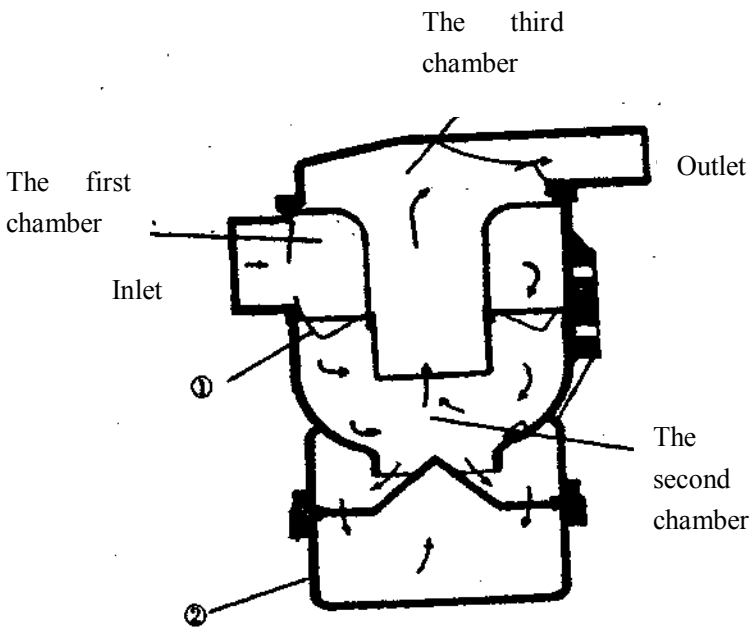

Fig. 2.1-8

3. Dirt collector

Dirt collector is installed on the front of the air filter inlet, and the purpose is to filter the air which flows into the air filter.

(1) Operational principle

With the running of the engine, the air is drawn into the first chamber of the dirt collector, and then flows into the second chamber through windmill air vane shaped diaphragm orifice ① which will exert rotary action on the air. The centrifugal force generated by rotary air current spread the dirt around, and the dirt will hit the internal wall of the second chamber and fall into the cup ② surrounding the wall while the dusted air is drawn into the air filter through the third chamber. Please refer to 2.1-8.

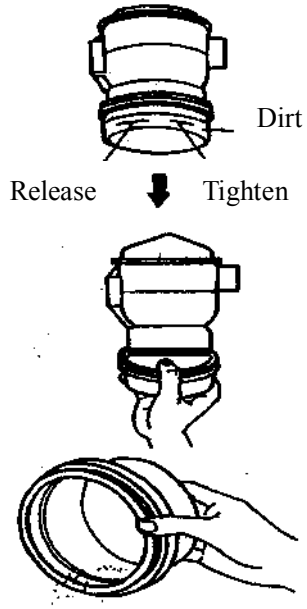

Fig. 2.1-9 Cleaning of dirt collector

https://truckmanualshub.com/

(2) Daily cleaning

Clean dirt collecting cup monthly. As is shown in Fig. 2.1-9, disassemble dirt collecting cup from the dirt collector, dump the dirt and reassemble it to the previous position.

4. Exhaust emission control device

In order to prevent the petrol vapor from flowing into the air and reduce the pollution to the air, the control to oil vaporization include the following two parts: the first is to seal oil pump and increase the internal pressure of oil tank to reduce the original vaporized volume; the second is to store and intake the vaporized volume after surpassing certain pressure, and send them to the intake pipe to burn when the engine running.

Exhaust emission control device include carbon tank, oil-gas separator, oil tank cover with single directional valve, exhalant pipe, vacuum pipe, desorption pipe etc. Please refer to Fig. 2.1-1.

The operational principle of the system is that : intake the oil vapor from the oil tank by using the excellent quality of absorption and desorption of active carbon. When the engine is on normal operation, make desorption to the oil vapor stored in the active carbon by applying the vacuum degree of the intake system and make the active carbon restore its ability of storing and absorbing.

The power stroke of the system is that: with the change of environmental temperature and pressure, the oil vapor in the oil tank exhausted from vapor escape port will be condensed through oil-gas separator, the condensed liquefied oil returns to the oil tank and the vaporized oil flow into the active carbon to be stored through the double directional valve of the carbon tank. When the engine normally runs, vacuum is created in the engine carburetor, the fresh air is drawn through the air port of carbon tank under the function of carburetor vacuum. When the fresh air passes the carbon tank, it takes the oil vapor stored in the active carbon to the engine carburetor and then flow into the combustion chamber together with intake combustible mixture to burn. When vacuum is created as a result of environmental temperature falling and oil consumption, the fresh air will be drawn from the air port of the carbon tank under the function of oil tank vacuum and flows into the oil tank through carbon tank and oil-gas separator to release the vacuum existed in the oil tank, and thus protecting the oil tank to ensure the normal operation of the engine.

II. Exhaust System

Exhaust system is made up of intake pipe, muffler and relevant accessories.

(I) Exhaust muffler

1. Muffler structure

The purpose of the exhaust muffler is to reduce the impulse of the exhaust current and therefore reduce the exhaust noise.

The muffler welding assembly applies dual rate muffling, the first rate adopts extending muffling and the second rate adopts expanding muffling.

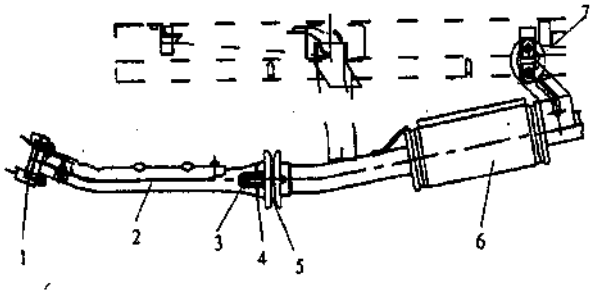

Fig. 2.1-10

1. Sealing gasket 2. Intake pipe 3. Bolt 4. Spring 5. Sealing coil 6. Muffler 7. Cushion slab

https://truckmanualshub.com/

As the exhaust manifold of engine applies compound exhausting, the exhaust system can be divided into two parts, namely intake pipe and muffler welding assembly. The intake pipe cooperates with the engine to make compound exhausting, and combines the two pipes into one pipe.

2. Installation and function

The intake pipe is connected to the engine exhaust manifold, and sealed by sealing gasket and then bolted together. The ball shaped sealing gasket to seal the intake pipe and muffler welding assembly, the cone shaped springs and bolts are used to tighten them. Rubber pad is used to connected the muffler welding assembly and frame rail. After connecting the intake pipe and muffler welding assembling, host them to the frame rail and then turn it to the suitable angle to make muffler tailpipe not interfere with other parts, the last step is to tighten all the bolts. Refer to 2.1-10.

3. Maintenance and service

The exhaust system shall be checked when a vehicle drives every 20,000 kilometers.

The check includes the following: whether there exists damages of muffler sealing gasket and whether there exists damages of intake pipe and muffler welding assembly, and if any failure occurs, the part shall be exchanged; whether the joint point of intake pipe and engine releases, if occurs, it shall be tightened.

Section 2 Electro Engine Series of Accessories

I. UAES system (ally electronics)

(I) Oil supply system

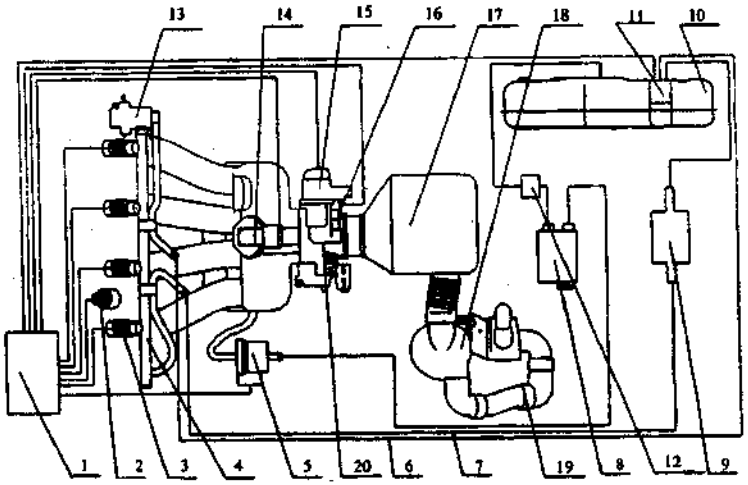

Fig. 2.1-1 Schematic Diagram of UAES Oil Supply System

1. Electric controller 2. Water temperature sensor 3.Oil nozzle
4. Oil guide 5. Carbon tank magneto valve 6. Return oil valve
7. Induction manifold 8. Carbon tank 9.oil filters 10. Fuel tank
11. Fuel pump 12. Oil-gas separator 13. Oil pressure regulator
14. Air intake temperature and pressure sensor 15. Step motor
16. Restrictor position sensor 17. Air filter 18. Dirt collector
19. Intake pipe 20. Restrictor valve body

https://truckmanualshub.com/

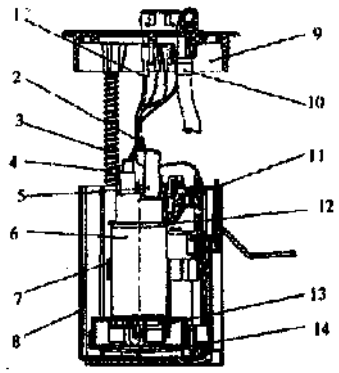

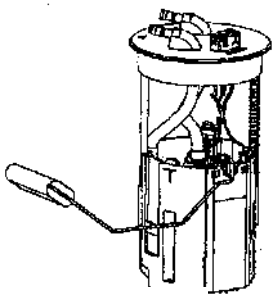

1. Harness assembly 2. Wire clip 3. Spring 4. Guide rod 5. Pressure hose 6. Oil pump 7. Oil pump bracket 8. Oil reservoir 9. Flange 10. Caliper 11. Fluid level sensor assembly 12. Spring ring 13. Holding ring 14. Oil filter

Fig.2.2-2 Fuel Pump and Support Assembly

Engine control system immediately supply power to engine electric controller after the ignition switch turn to the position of “ON” (do not start the engine). The electric controller then connects fuel pump relay and the power source is switched on. 300kPa pressure will be produced in the fuel pipe after filtered by the oil filter and then send to the oil guide rail and oil guide rail distributor on the intake manifold. After the start switch is switched on, the electric controller turns on the oil pump relay and oil pump power supply is switched on, then the electric controller controls the fuel injector of every cylinder intake pipe to inject oil regularly based on ignition signal. (As to the operational principle, please refer to engine service manual).

The injection order of oil supply system is: the four nozzles injects one by one according to the sequence of one, two, three, four.

1. Fuel pump (type: D580CN1009)

The fuel pump and its support assembly consist of the following parts: fuel pump, oil level sensor, flange with electric and oil circuit joint etc. (Please refer to Fig. 2.2-2).

Installation method

Electric fuel pump is submersible pump and the pump support assembly is installed in the oil tank. The flange is sealed to the flange which passes rubber sealing rings and the relevant parts.

(1) Oil circuit joint

The joint of intake pipe and return oil pipe outside the flange must be fixed and reliable to ensure the system to have no leakage under the pressure of 300kPa.

(2) Technical specifications

Operational voltage	6-15V DC(according to the vehicle power supply system) rated operational voltage:12V
Systematic pressure	300kPa
Operational temperature range	-40℃——+80℃
allowable operational agent	high quality lead free petrol which numbered over 90
Durability	more than 100000 kilometers on the condition of normal running and satisfying the operational agent and without changing the installation method

https://truckmanualshub.com/

Note:

• As the demand for electric vehicle oil supply pressure is quite high, the rubber pipe and clip must be able to ensure the pressure of more than 300kPa. Therefore, the rubber pipe and clip cannot be substituted by ordinary part, otherwise the leakage will occur in the pipe. More seriously, a fire hazard will also occur.

• The operational requirement for the fuel pump is to have enough fuel oil in the fuel tank. If there is not enough fuel oil in the fuel tank, the fuel pump may be burned to be damaged by its own poor cooling. Therefore, when the engine or the vehicle is running, enough quantity of fuel oil must be ensured in the fuel tank.

• When disassembles the fuel pump and support assembly, the pressure of fuel oil pipe must be firstly released in order to avoid hurt to people.

2. Fuel filter

The fuel filter is barrel shaped and cannot be disassembled. The filter element is installed in the interior. A new fuel filter shall be exchange every 10000 kilometers' driving.

Note: As the demand for the bursting pressure endured by the electric vehicle used fuel filter is quite high (no less than 16kg), the filter cannot be replaced with carburetor vehicle used fuel filter.

3. Emission control device

As the operational principle of the device, please refer to Fig.2.2-1.

With the environmental temperature and pressure changes, the petrol vapor in the petrol tank exhausted from the airport will be condensed through oil-gas separator. The condensed liquefied petrol is returned to the petrol tank and the vaporized petrol is stored in the active carbon tank through carbon tank dual directional valve. When the engine is in normal running, the electric controller module controls carbon tank control valve and drive and adjust the volume of desorption air current.

The operational principle of the carbon tank is as the following: The vacuum generated in the engine intake system makes the fresh air be drawn from the carbon tank air port. When passing the carbon tank, it takes the petrol vapor in the carbon tank to the engine intake system, and then sent to the combustion chamber together with intake mixture. In the event that vacuum is created as a result of environmental temperature falling or petrol consumption, the fresh air will be drawn from the air port of the carbon tank under the function of oil tank vacuum and flows into the oil tank through active carbon tank, dual directional valve, oil-gas separator and air port to release the vacuum existed in the oil tank, and thus protecting the oil tank to ensure the normal operation of the engine.

(II) Intake system

As the operational principle of the intake system, please refer to Fig.2.2-1.

The electric controller module measures intake temperature, pressure, engine rpm, phase signal through intake temperature and pressure sensor installed on the intake system, cooling fluid temperature sensor and Hoor sensor located in the ignition coil. Meanwhile, the system can precisely calculate the actual intake volume of the engine based on the coolant fluid temperature input signal when the engine is regularly running. When idling, the electric controller controls the intake volume by controlling the section area of idling step motor air adjusting valve.

Note: When the electric controller is power off or the battery is exchanged, again learning on the step motor shall be made when restarting the engine.

The steps are as follows: turn the ignition switch to the position of "ON" (do not start the engine), and restart the engine after keeping 10 seconds.

(III) Exhaust system

The exhaust system is composed of tri-effective catalytic converter welding assembly, muffler welding assembly and joint components. Please refer to Fig.2.2-3.

1. Catalytic converter

(1) The function of catalytic converter is: convert the harmful exhausts (HC, CO, NO_x) from the engine tailpipe into harmless exhausts (H_2O, CO_2, N_2) to reduce air pollution.

https://truckmanualshub.com/

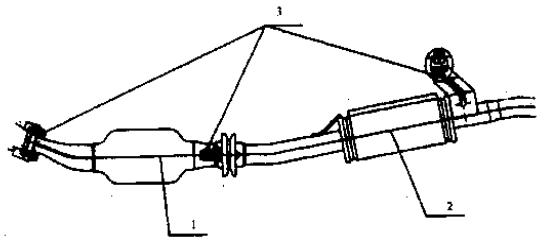

Fig. 2.2-3 Structure Chart of Exhaust System

1. Tri-effective catalytic converter welding assembly 2. Muffler welding assembly 3. Joint component

(2) Catalytic converter structure

Catalytic converter includes a piece of ceramics carrier wrapped by backing strap and inserted in a section of tube shaped body case. The hole of the carrier is painted with catalyst coating (Pt, PD, Rh).

Note:

• The fuel oil used must be of high quality lead free petrol (over RON90, and lead volume is less than 0.005L etc), as leaded petrol will damage tri-effective catalytic converter and the components of electric control system as hereafter will interfere with the normal operation of the parts.

• The tri-effective catalytic converter shall not be stricken and strongly vibrated, as the interior ceramics carrier may be broken to block the exhaust system.

• When a fire occurs, namely the engine does not run regularly after start, the engine power significantly decreases or other abnormal phenomenon which indicates there exists failures in the ignition system, please contact with service station quickly. If necessary, low speed and short distance driving can be made at low engine rpm.

• Try to avoid frequently cold start and long time run the engine during the starting period (fuel oil is injected to the cylinder during the starting period, and will be exhausted to the tri-effective catalytic converter without being burned which will cause damages to the converter).

• When the oil in the tank is nearly used up, irregular oil supply will result in the damage to the tri-effective catalytic converter.

• Do not apply the method of pulling or pushing to start the engine (the fuel oil without being burned will flow into the tri-effective catalytic converter which will cause damages to the converter).

Note For Maintenance And Service

• Maintenance shall be made regularly to ensure the normal operation of the electric control system. If any abnormal condition occurs, it shall be timely repaired to ensure exhaust level of vehicle and long life time of the tri-effective catalytic converter.

• The exhaust pipe sealing gasket must be replaced when replacing a new component.

• No foreign particles shall be fallen into the tri-effective catalytic converter during assembly. Otherwise, the tri-effective catalytic will be damaged.

• Check whether there exists gas leakage or other abnormal noises of exhaust system joints and check whether the electric system works normally after the normal running of the engine.

II. DELPHI system

(1) Oil supply system

When the ignition switch is switched on, the engine control system immediately supplies power to the engine electric control module. In the event that the engine start switch is turned on, once the system detects the first impulse signal of the crankshaft rotation, the electric controller connects fuel pump relay. Power source of the fuel pump is switched on and the fuel oil is pumped and pressed by electric oil pump from the oil pump, then the fuel oil is sent to the fuel oil guide rail and guide rail distributor above the engine to make the fuel injector installed on each cylinder regularly inject after filtered by the fuel filter.

https://truckmanualshub.com/

The injection order shall be grouped injection: cylinder 1 and 4 are grouped together, and cylinder 2 and 3 are grouped together.

1. Fuel pump (type: DELPHI25330569)

As to the fuel pump and support assembly components, please refer to UAES system.

(1) Installation method

Electric fuel pump is submersible pump and the pump support assembly is installed in the oil tank. The flange is sealed to the flange through rubber sealing rings and oil tank flanges.

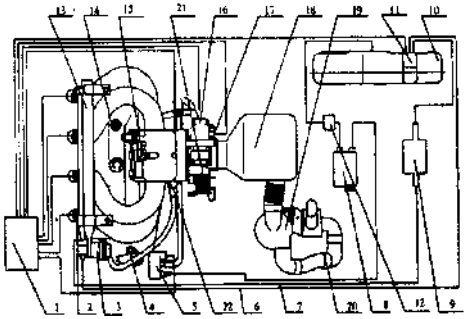

Fig.2.2-4 Schematic Diagram of Fuel Supply System

1. Electric controller 2. Oil nozzle 3. Fuel oil pressure adjustor 4. Crankshaft position sensor 5. Carbon tank magneto valve 6. Return oil pipe 7. Induction manifold 8. Carbon tank 9. Fuel filter 10. Fuel tank 11. Fuel pump 12. Fluid-gas separator 13. Oil guide 14. Water temperature sensor 15. Intake pressure sensor 16. Step motor 17. Restrictor position sensor 18. Air filter 19. Dirt collector 20. Intake pipe 21. Restrictor valve body 22. Intake temperature sensor

(2) Technical specifications

Operational voltage	6-15V DC(according to the vehicle power supply system) Rated operational voltage:12V
Systematic pressure	300kPa
Operational temperature range	-40℃——+80℃
Allowable operational agent	high quality lead free petrol (over RON90, and lead volume is less than 0.005g/L)
Durability	more than 100000 kilometers on the condition of normal running and satisfying the operational agent and without changing the installation method

Please refer to UAES system to see the notes.

2. As to the fuel filter, please refer to UAES system.

(II) Intake system

As to the schematic diagram of the intake system, please refer to Fig. 2.2-4.

The engine electric controller precisely measures the engine rpm and various input signals through intake temperature sensor (MAT) installed on the intake system, coolant agent temperature sensor (MAP) and crankshaft position sensor (CPS) located on the transmission flywheel cover. Meanwhile, the system exactly meters the actual intake volume of the engine based on the input signals of the coolant agent temperature sensor when the engine is on real time running. When idling, the electric controller controls the intake volume by controlling the section area of idling step motor air adjusting valve.

(III) Exhaust system

Exhaust system is composed of tri-effective catalytic converter welding assembly, muffler welding assembly and joint component. Please refer to Fig.2.2-5.

Please refer to UAES system to see the notes.

https://truckmanualshub.com/

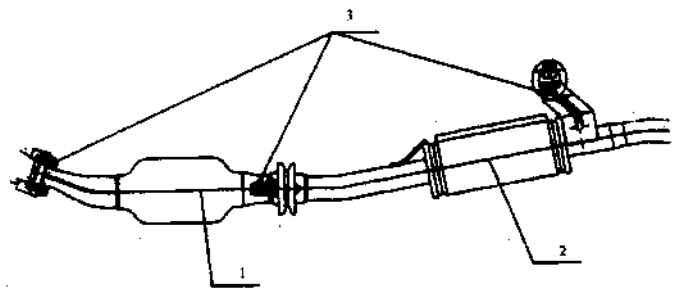

Fig.2.2-5 Structure Chart of Exhaust System

1.Tri-effective catalytic converter welding assembly
2. Muffler welding assembly 3. Joint component

https://truckmanualshub.com/

Chapter III. Chassis

Section 1 Clutch

I. Introduction

Clutch in the vehicle is single, dry, diaphragm spring clutch. Diaphragm spring outer side is a whole body, inner rings have some center pointing release fingers. The friction pad of the clutch is installed on the transmission input shaft through splines. Four torsion buffer springs are attached to the clutch friction pad. Diaphragm springs are fixed to the clutch pressure plate by using rivets which are taken as the support point of diaphragm springs.

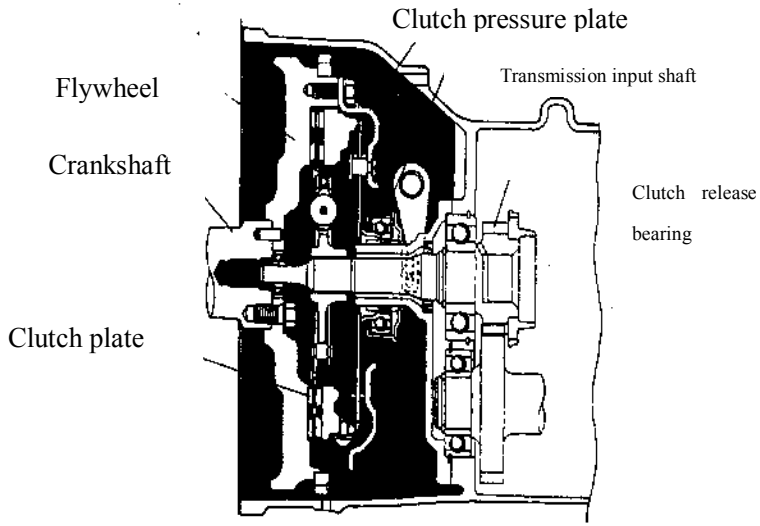

Fig.3.1-1a

When the clutch is jointed, diaphragm spring outer rings are tightly presses on the pressure plate which tightly presses the friction pad on the flywheel.

When the clutch pedal is pressed, the release fork push the releasing bearing to move left, and release bearing push diaphragm spring inner ring release finger. Diaphragm springs make the spring outer ring move right based on rivet and drive the pressure plate separate from the friction pad. The clutch thus on the separation condition at the same time, and thus the engine power is cut off.

This type of clutch is of simple structure, complete separation, excellent heat emission, compact size, and need not to be adjusted.

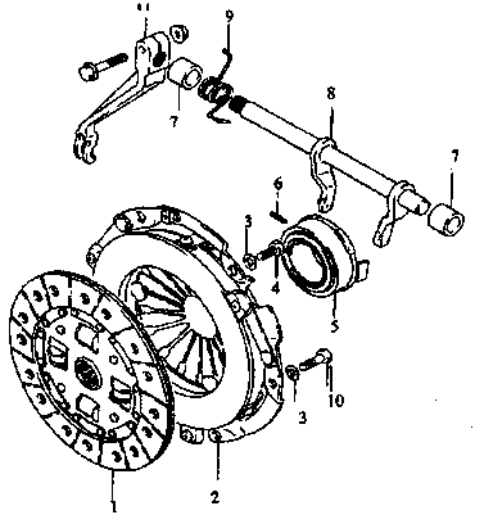

Fig.3.1-1b Clutch

1. Clutch friction pad 2. Clutch pressure plate 3. Spring washer 4. Clutch bolt 5. Clutch release bearing 6. Clutch release pin 7. Liner 8. Clutch release shaft 9. Return spring 10. Sizing bolt 11. Clutch release pipe

https://truckmanualshub.com/

II. Disassembly

The prerequisite for disassembling the clutch is that the transmission has been disassembled in the correct order.

The disassembly procedure is as the following:

① Disassemble the six bolts used to tighten the clutch, and then take the clutch pressure plate and clutch friction pad out.

② Disassemble the clutch release bearing from the front of the transmission shaft.

③ Disassemble the flywheel.

④ Disassemble the transmission input shaft side bearing from the flywheel.

III. Examine the components

1. Wearing of the clutch friction pad

Measure the hollow depth of each rivet head, namely the distance between rivet head and friction lining surface to check the wearing condition of each friction lining. If the hollow depth of any hole has reached to the wearing limit, a new clutch friction pad assembly shall be exchanged.

Hollow depth of rivet head	Standard	Operating limit
	1.2mm	0.5mm

2. Fit clearance of clutch friction pad splines

Rotate the clutch friction pad installed at the transmission input shaft to check the spines clearance. If the clearance exceeds the operating limit, a new clutch friction pad assembly shall be exchanged. The clearance means the displacement number on the circumference measured by using micrometer gauge.

Fit clearance of splines	Operating limit
	0.8mm

3. Clutch pressure plate

Check the friction spring rivet of the clutch pressure plate to find whether there exists release. If the rivet releases or begins to release, that is the clutch pressure plate produces “clatter” noise when the clutch pedal is pressed, a new clutch pressure plate assembly shall be exchanged.

Check the wearing condition of the joint point between diaphragm spring release fingers and clutch release bearing. If the condition is quite serious, a new clutch pressure plate shall be exchange.

4. Release bearing

Rotate the release bearing to make it free run, if there exists the condition of obstruction, “clatter” noise or other abnormal noises, a new release bearing shall be exchanged.

5. Transmission input shaft side (I shaft) bearing

Rotate the release bearing to make it free run, if there exists the condition of obstruction, “clatter” noise or other abnormal noises, a new release bearing shall be exchanged.

6. Flywheel

Check whether there exists wearing or damages on the contact surface between flywheel and clutch friction pad.

IV. Assembly

Assemble the clutch according to the reverse order of disassembly. The important steps are as follows.

① The flywheel bolt shall be tightened by applying the specified tightening torque 40-50N • m.

② Install the clutch pressure plate on the flywheel. Note that the two sizing bolts shall not be omitted. The tightening torque of the clutch pressure plate shall be 18-28N • m.

③ The lubricating grease shall be appropriately coated on the release bearing base before assemble the release bearing.

④ A small quantity of lubricating grease shall be coated on the release fork and input shaft end.

⑤ The two impressing marks shall be aligned when install clutch release arm to clutch release bearing.

https://truckmanualshub.com/

V. Maintenance

1. Free stroke of clutch pedal

① Press the clutch pedal, stop pressing when feels the clutch resistance and measure the distance (namely free stroke of clutch pedal). The free stroke of clutch pedal shall be 20-30mm.

② If the free stroke of clutch pedal is out of the specified range, then adjust it by adjusting the clutch pulling thread adjust nut (on the side of pedal and release arm).

③ After completing adjusting the clutch pedal, the clutch pulling thread side screw shall exceeds the adjust nut 1-5mm.

2. Lubrication of clutch pulling thread

Lubricating grease shall be coated on the hook part ① of the clutch pulling thread.

15-25 N • m

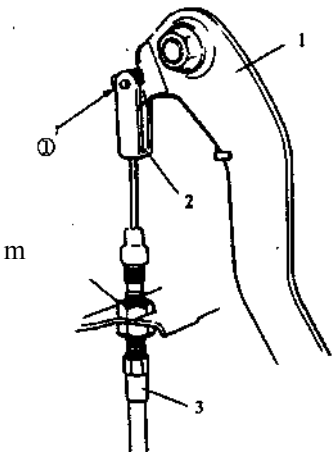

Fig.3.1-2

1. Clutch pedal 2. Clutch pulling threading joint
3. Clutch pulling thread

Route of clutch pulling thread

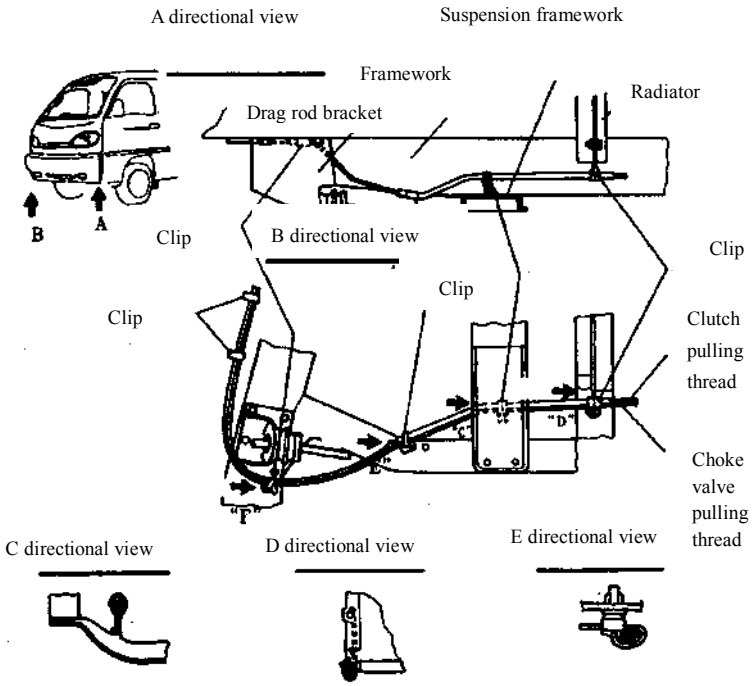

Fig.3.1-2

VI. Tightening torque

If there occurs releasing on the bolt or nut, they are must be tightened with specified tightening torque.

Component	tightening torque N • m
Flywheel bolt	40-50
Clutch pressure plate bolt	18-28
Clutch release arm bolt and nut	10-16
Clutch pulling thread lock nut	15-25

https://truckmanualshub.com/

Section 2 Transmission

I. Introduction

The transmission is gear meshed type, and has five (four) driving gears, one reverse gear and is operated by flexible shaft.

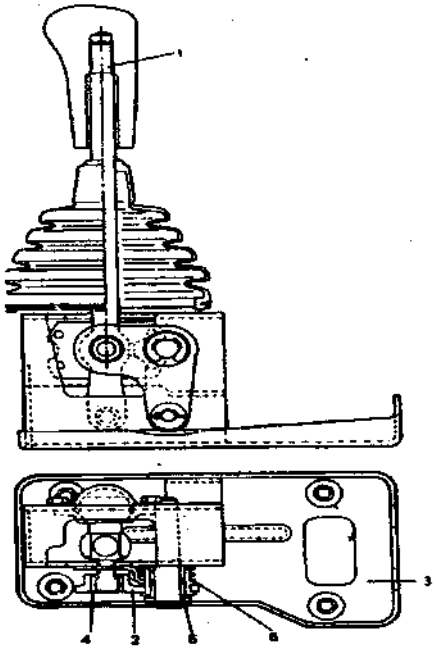

Fig.3.2-1

1. Gearlever 2. Speed selecting arm 3. bracket base 4. Ball base 5. Lining 6. Speed selecting return spring 7. Gear shifting handle assembly 8. Gum cover 9. Cylindrical roller 10. The first pressure spring of gear shifting handle shaft 11. Washer 12. Reverse gear lock spring 13. Reverse gear lock ball 14. Fork arm 15. Limit stop 16. The second pressure spring of gear shifting handle shaft 17. Reverse gear shifting spacer 18. Gear shifting cover body

II. Gear shifting control

1. Gear shifting control system is mainly composed of the following parts. (Please refer to Fig.3.2-1) Gear lever is connected to gear shifting arm and speed selecting arm on the transmission by two pieces of flexible shafts (shift flexible shaft and speed selecting flexible shaft).

2. Disassembly

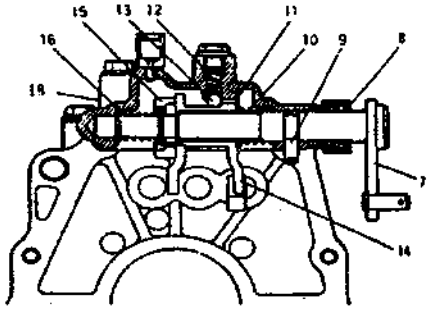

Five gear transmission

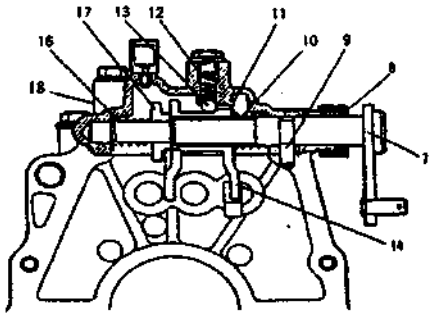

Four gear transmission

https://truckmanualshub.com/

1) Gearlever
① Disassemble the front gearlever assembly.
② Disassemble the shift flexible shaft from the gearlever.
③ Disassemble the speed selecting arm.
2) Shift flexible shaft and speed selecting flexible shaft
① Disassemble the shift flexible shaft and the speed selecting flexible shaft from the transmission side gear shifting arm and gear selecting arm.
② Disassemble the front gearlever assembly.
③ Disassemble the shift flexible shaft and the speed selecting flexible shaft from the gearlever and bracket.
3) Gear shifting cover body
① Disassemble the shift flexible shaft and the speed selecting flexible shaft from the gear shifting arm and gear selecting arm after ensuring the gearlever is on the neutral position.
② Disassemble the gear shifting cover body from the transmission.
③ Disassemble gear shifting arm and gear shifting arm axle.
④ Disassemble reverse gear lock screws, coil springs, reverse gear lock ball.
⑤ Pull the cylindrical roller out from the cover body.
⑥ Pull the gear shifting handle shaft from the cover body and disassemble the second spring, fork spring, washer and the first spring.
⑦ Disassemble the limit stop. Note: The step is unnecessary as to four gear type transmission.
3. Examine the components
1) Fork arm and gear shifting arm axle
Check each lever arm end to see whether there exists wearing. If occurs, it shall be exchanged.
The limit stop shall also be examined as to five-gear type transmission.
2) Oil seal of gear shifting arm axle and gear selecting arm axle
Check each component to see whether there exist wearing, damage or deformation. If occurs, they shall be exchanged.
The oil seal is recommended to be used when reassembling.
3) Spring
Check each spring to see whether there exists weakness or damage. If occurs, it shall be exchanged.
4) Shifter fork axle
Visually examine each joint point between fork axle (the first gear, the second gear, the third gear, the fourth gear and reverse gear) and fork arm to see whether there exists any wearing. If occurs, the worn fork axle must be replaced.
5) Gearlever and bracket
Check each lining and washer to see whether there exists any wearing. If occurs, it must be replaced. If there exists obstruction to the gearlever action, lubrication grease needs to be coated.
4. Assembly
Assemble according to the reverse order of disassembly. The important steps are illustrated in the following.
Note: All the components must be coated with gear oil before installed into the gear shifting cover body.
1) Shifting control body
① Install reverse gear limit stop.
Note: The step only applies to five gear type transmission.
② Install the second spring, fork arm, washer and the first arm to the cover body. The tightening torque of reverse gear limit screw is 18-28N • m (Please refer to Fig.3.2-2).
Note: As to four gear type transmission, spacer is installed between the second spring and gearlever.

https://truckmanualshub.com/

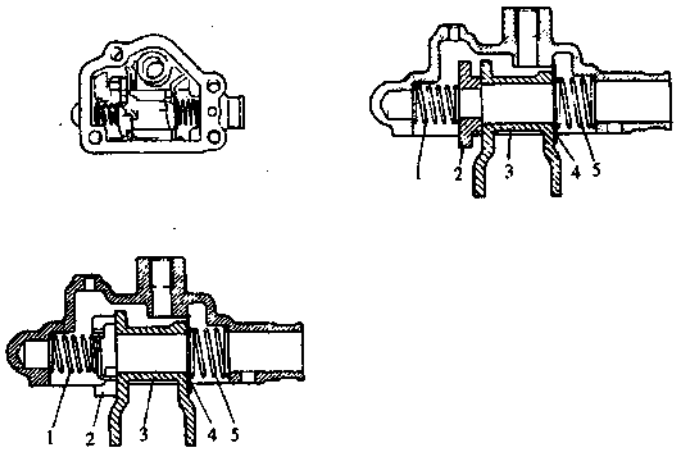

Fig.3.2-2

1. The second spring 2. Reverse gear limit pawl 3. Gear lever
4. Washer 5. The first spring

③ Insert the gear shifting handle axle into the gear shifting cover body until groove "A" on the axle aligns with pin hole "B" on the gear shifting cover body. The lever arm of fork arm and the arm center line on the gear shifting handle axle must be on the same level. (Please refer to Fig.3.2-3)

④ Install gear shifting arm axle and screw it to the specified torque 13-20N • m.

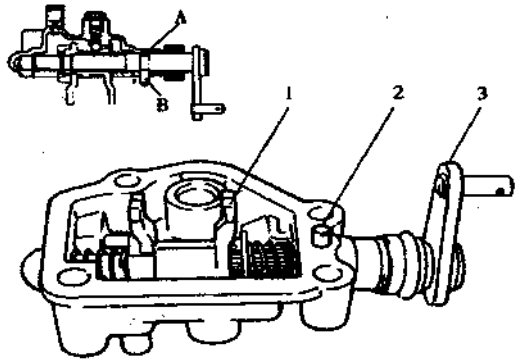

Fig.3.2-3

1. Fork arm lever arm 2. Cylindrical roller
3. Gearing shifting handle axle arm

⑤ Install the iron ball, springs and screws, and screw the screws to the specified torque 8-14N • m.

⑥ Simulate the gear shifting and gear selecting action and pull the gear selecting arm and gear shifting arm to check the flexibility of their action.

⑦ The joint surface must be cleaned when install the gear shifting cover body to the transmission rear case body, and then the sealant shall be coated on the joint surface.

⑧ Screw the gear shifting cover body bolt to the specified torque 18-28N • m.

⑨ Connect the speed shifting flexible lever and the speed selecting flexible to each rocking arm respectively. The speed selecting flexible lever shall not be assembled to the gear shifting rocking arm and the speed shifting flexible lever shall not be assembled to the gear selecting rocking arm.

⑩ After completion of connecting flexible levers, operate the gearlever to check the effectiveness and flexibility when putting into a gear or choosing a gear. If there exists any problem, please refer to the service manual to continue operation.

https://truckmanualshub.com/

2) Speed operating flexible lever and speed operating lever

Assemble according to the reverse order of disassembly.

3) Washer and lining

The washer and lining must be installed on the correct position, and lubrication grease shall be coated on the positions indicated below.

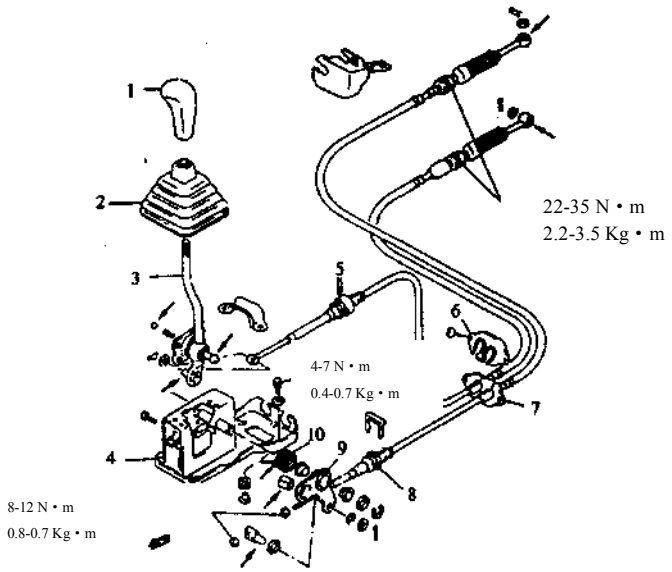

Fig.3.2-4

1. Speed shifting handle assembly 2. Dust proof cover 3. Gearlever 4. Bracket base 5. Speed shifting flexible lever assembly 6. Dust proof and pressure resistant plate 7. Hose seal lock 8. Speed selecting flexible lever assembly 9. Gear selecting arm assembly 10. Speed selecting return spring

←: lubrication grease A (99000-25010) shall be coated

4) Flexible lever

The installation position shall not be mixed when install the speed shifting flexible lever and speed selecting flexible lever to the transmission control lever or speed operating flexible lever. Please refer to Fig.3.2-4 and Fig.3.2-5 to ensure correct joint. Check whether the operation lever cans flexibly selecting and shifting gears after the completion of installing all the components.

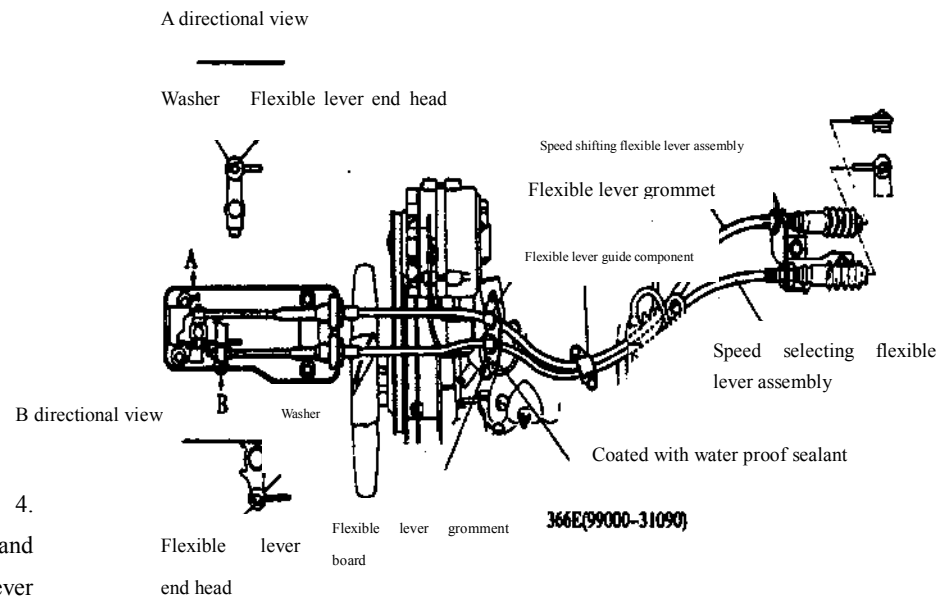

Fig.3.2-5

https://truckmanualshub.com/

5. Maintenance

Adjustment of flexible shaft

Note:

• Each lubricating part listed in Fig.3.2-4 must be checked before adjustment to ensure adequate lubrication and there exists no wearing on the lining and other components. Maintenance shall be made based on particular conditions.

• Speed shifting flexible cannot be adjusted. It can only be replaced if failure occurs.

If gearlever can be easily and effectively put from neutral position (vertical state) to the third gear or fourth gear, it indicates that speed selecting flexible shaft is on good condition.

If gearlever cannot be easily and effectively put from neutral position (vertical state) to the third gear or fourth gear, the following method can be used to adjust the speed selecting flexible shaft:

1) Slightly operate gearlever toward left, making the speed selecting shaft incline from the current neutral position to the second gear side (gear selecting position). If gearlever can be easily and effectively put in the third gear and fourth gear from this point, release speed selecting flexible shaft adjusting bolt “A” indicated in Fig.3.2-6 and tighten bolt “B” until gearlever can be easily and effectively put in the third gear and fourth gear.

2) Slightly operate gearlever toward right, making the speed selecting shaft incline from the current neutral position to the reverse gear side (gear selecting position). If gearlever can be easily and effectively put in the third gear and fourth gear from this point, release speed selecting flexible shaft adjusting bolt “B” indicated in Fig.3.2-6 and tighten bolt “A” until gearlever can be easily and effectively put in the third gear and fourth gear.

6. Tightening torque Unit: N • m

Fastener	Tightening torque
Reverse gear limit screw	18-28
Reverse gear lock ball screw	8-14
Reverse gear arm axle nut	13-20
Reverse gear cover bolt	18-28

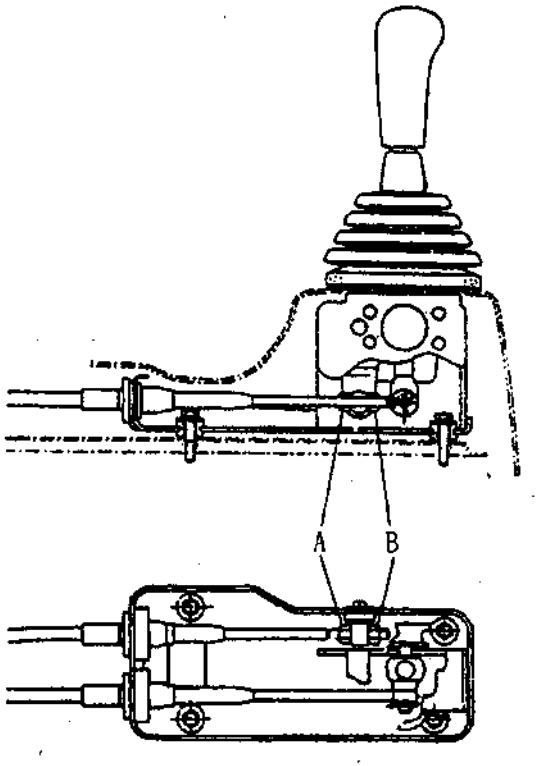

Fig.3.2-6

https://truckmanualshub.com/

III. Transmission (five gear type)

1. Introduction

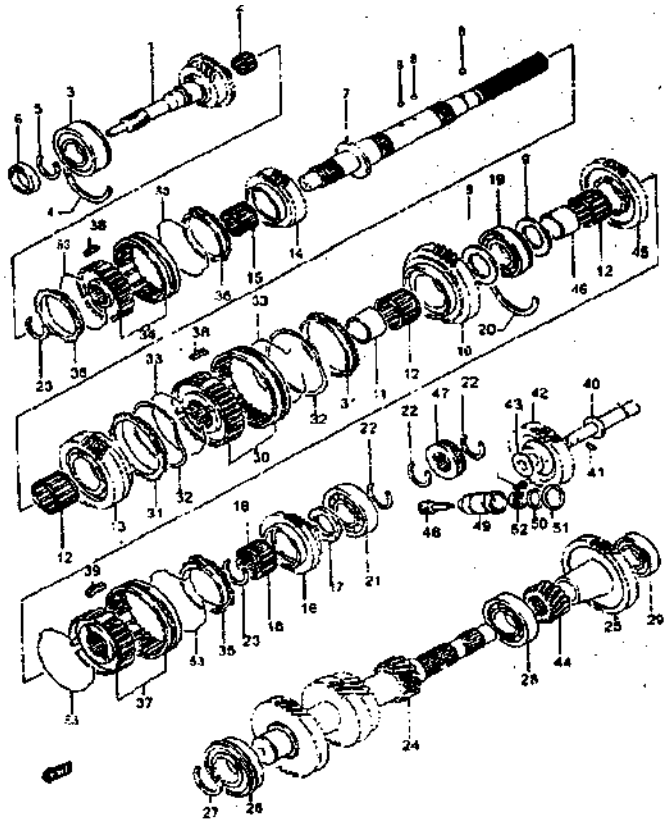

Fig.3.2 – 7a

CA6350 series micro vehicle adopts two types of transmissions: five gear type transmission is installed on 456 series engine and four gear type transmission is installed on 462 series engine. Four gear type transmission has four driving gears, each of which has an inertia synchronizer and one reverse gear, the fourth gear is direct gear. Four gear type transmission has five driving gears, each of which has an inertia synchronizer and one reverse gear, the fourth gear is direct gear.

Transmission cover is divided into the upper cover body and the lower cover body in structure. The upper cover body has three prong axle gear assembly and the lower cover body has countershaft. The rear of the transmission has a extending part, namely rear cover body which has reverse gear.

The front of the transmission cover body is clutch cover, the two cover bodies are combined together. The transmission input shaft (the first shaft) is also the driven shaft of the clutch, while the transmission output shaft (the second shaft) is extended from the rear part of the transmission and cooperates with the driving splinted fork.

The synchronizer used in the transmission is sliding inertia synchronizer. The synchronizer can be used to avoid smashing during gearshift, ensure smooth gearshift, facilitate operation and increase the durability of the transmission.

As to the five gear type, please refer to Fig.3.2-7a and Fig.3.2-7b.

1. The first axle assembly 2. Rolling bearing 3. The first axle bearing 4. C type lock ring 5. Collar ring 6. Oil seal 7. The second axle 8. Cylindrical roller 9.thrust washer 10. The first gear 11. Lining 12. Needle bearing 13. The second gear 14. The third gear 15. Needle bearing 16. The fifth gear 17. Thrust washer 18. Needle bearing 19. Bearing 20. C type lock ring 21. Bearing 22. Collar ring 23. Collar ring 24. Countershaft 25. The fifth driving gear 26. Front bearing of countershaft 27. Collar ring 28. Middle bearing of countershaft 29. Bearing 30-1. Low speed commutating gear cover 30-2 outer gear ring 31. Low speed synchronizing ring 32. Elastic ring 33. Spring clamp ring 34-1. High speed commutating gear ring 34-2 outer gear ring 35. The fifth gear synchronizing ring 36. High speed synchronizing ring 37-1 reverse gear and the fifth gear commutating gear 37-2. Outer ring 38. Slide block 39. The fifth gear slide blocks 40. Reverse gear countershaft 41. Sizing pin 42. Reverse gear countershaft assembly 43. Shield ring 44. Reverse driving gear 45. Reverse driven gear 46. Lining 47. Odometer worm shaft 48. Odometer driven gear 49. Lining 50. Rubber ring 51. Rubber cup assembly 52. Oil seal ring assembly 53. Spring clamp ring

https://truckmanualshub.com/

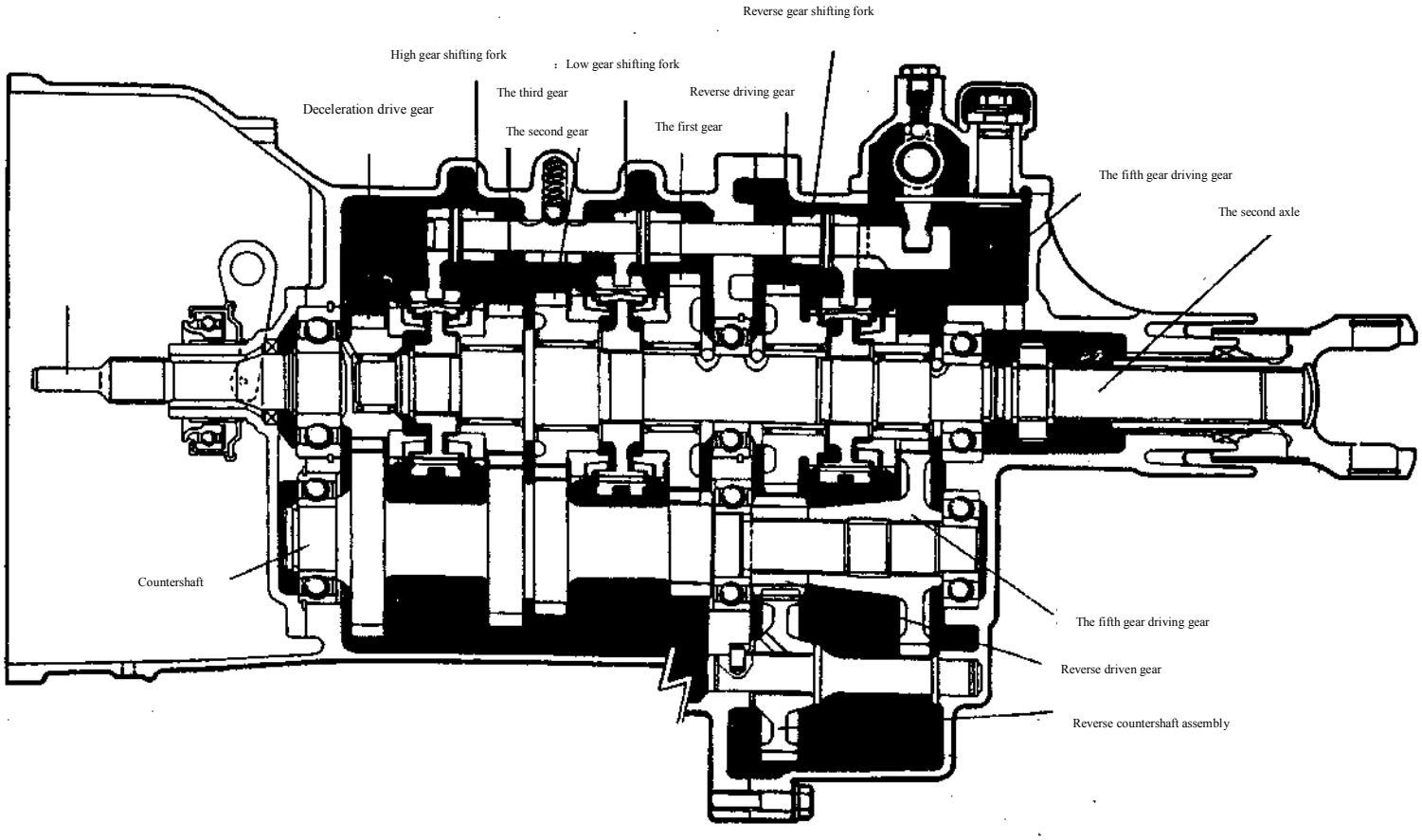

Fig.3.2-7b

https://truckmanualshub.com/

2. Each gear ration of transmission

The first gear	3.652
The second gear	1.947
The third gear	1.432
The fourth gear	1.000
The fifth gear	0.795
Reverse gear	3.466

3. Disassembly

1) Disassemble the negative pole (-) and the positive pole (+) tie wire from the battery binding post.
2) Disassemble the reversing lamp switch leading wire.
3) Disassemble controlling wire and the positive pole (+) tie wire from the motor.
4) Disassemble the motor form the transmission cover body and disassemble the battery negative pole (-) tie wire from the transmission cover.
5) Release the reversing lamp leading wire from the clip.
6) Disassemble the speedometer driving flexible shaft from the transmission cover body.
7) Disassemble the oil draining bolt and drain the gear oil from the transmission.
8) Disassemble the clutch pull thread from the clutch release lever.
9) Disassemble the gear selecting flexible shaft from each rocking arm and bracket.
10) Disassemble the transmission shaft and disassemble the hot air hose clip from the transmission cover body.
11) Disassemble the clutch lower plate from the transmission cover body.
12) Disassemble the bolt which is used to tighten the engine cylinder block and transmission cover body.

Note: Check again to ensure no part is still connected to other parts or has not been disassembled before disassembling the transmission.

13) Disassemble the transmission rear bracket from the body.
14) Disassemble the transmission.

4. Breakdown

1) Replace clutch release shaft lining

① Disassemble the clutch release shaft.
② Disassemble the springs from the clutch release shaft.
③ Disassemble the clutch release lever from the shaft.
④ Disassemble the clutch release shaft from the transmission cover body.
⑤ A suitable amount of lubricating grease must be coated on the lining inner surface if reassembles the lining, and tap the lining into the transmission cover body until its surface becomes flat.

2) Break down the upper and lower case

① Disassemble the clutch release shaft from the transmission first axle.
② Disassemble the front cover bolts, and pull the front cover out by means of 3 longer M6 type ordinary bolts.
③ Disassemble the gear shifting cover and the speedometer driven gear lining.
④ Disassemble the bolts which are used to tighten the rear case, and disassemble the rear case.
⑤ Disassemble the bolts which are used to tighten the upper and lower case, and break down the upper and lower case.

3) Disassemble the second axle and the first axle

① Take the first gear out by hand. Do not fall the high speed synchronizing ring.
② Disassemble the collar ring blocks the odometer worm shaft, and slide the high speed synchronizing ring, the third gear and needle bearing out from the second axle.
③ Disassemble the collar ring blocks the odometer worm shaft, and slide the odometer worm shaft out. Disassemble the collar ring which is on the second axle and which blocks the rear bearings.
④ Take the five gear washer, cylindrical roller, fiver gear, five gear synchronizing ring and five gear needle bearing from the second axle.
⑤ Disassemble collar ring, reverse gear synchronizer, reverse gear, reverse gear needle bearing.

https://truckmanualshub.com/

⑥ Disassemble the thrust washer and the reverse gear lining from the second axle.
Note: The cylindrical roller may be fallen during the process of disassembly. Do not miss the cylindrical roller. What's more, the ball bearing cannot disassembled simultaneously together with the above-mentioned washers and linings.
⑦ Disassemble the cylindrical roller from the second (central) axle.
⑧ Disassemble the first gear, needle bearing and synchronizer ring from the second axle.
⑨ Disassemble the first gear lining, low speed synchronizer and synchronizer ring, the second gear and the second gear bearing.
4) Disassemble the countershaft
① Disassemble the countershaft connected with gear.
② Disassemble the countershaft rear bearing.
③ Disassemble the countershaft five gear and the countershaft reverse gear.
④ Disassemble the collar ring the countershaft. Press the countershaft out to the extended case side by using hydraulic press machine, disassemble the bearing and take the countershaft assembly out.
5) Disassemble gear shifting fork and axle
All the gear shifting fork must be on the neutral position before disassembly.
① Pull the reverse gear shifting fork. The sizing balls and springs located in the hole may jump out during the operation, do not miss them.
② Pack the elastic cylindrical pin of the low speed gear shifting fork out (do not pack it too high to avoid damage the cover body) and pull the declutch shift shaft out. Do not spring the sizing ball, lock ball and springs too far.
③ Pack the elastic cylindrical pin of the high speed gear shifting fork out according the above-mentioned steps and pull the declutch shift shaft and shifting fork out.
5. Inspect the components
1) Gear
Examine whether there exists wearing, damage or discoloration on each part. If any problem occurs, replace a new part.
2) Synchronizer, commutating ring, outer ring and slide block
Examine whether there exists wearing or damage each part. If any problem occurs, replace a new part.
3) Shifting fork and outer ring
Examine whether there exists wearing or damage on the contact surface. Measure the maximum clearance between shifting fork and outer ring. The maximum clearance shall be 1mm.
4) The second axle
Examine whether there exists wearing, damage or discoloration on each part of the second axle. If any problem occurs, replace a new part.
5) Bearing and lining
Examine whether there exists wearing, damage or discoloration. As to the bearing, it must be checked to see its flexibility and whether there exists noise. If any problem occurs, replace a new part.
6) The first axle
Examine whether there exists any wearing on the cone part ①, gear ring ②, gear tooth ③ and splines ④ according to Fig.3.2-8. If any serious problem occurs on any part of the first axle, a new axle must be replaced.
7) Gear and synchronizing ring
Install the ring to the corresponding gear cone. Measure the gear clearance between two circumferences. If the clearance is less than the maximum operation limit, it shall be replaced based on the actual need.
Examine whether there exists abnormal wearing on the (gear) outer cone and the (ring) inner cone. Ensure the surface contact is evenly and complete contact and no waved wearing occurs on the surface. The worn part must be replaced. If the clearance between ring and gear and the condition of cone surface satisfy the specified requirements, the correct synchronizing action will occur during gear shifting.

https://truckmanualshub.com/

Clearance between gearing ring and tooth		
	Standard	Operation limit
Low gear, direct gear	1.0-1.4mm	0.5mm
Five gear	1.21-1.6mm	0.5mm

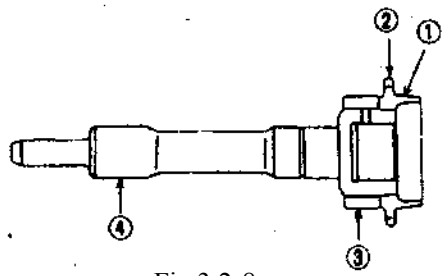

Fig.3.2-8

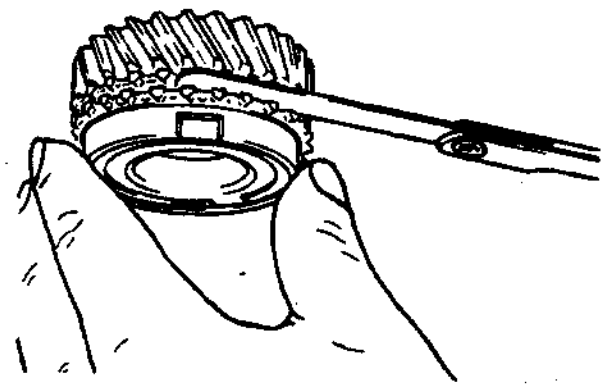

Fig.3.2-9

8) Chamfered edge tooth of synchronizing ring (outer tooth) and outer ring (inner ring)

The synchronizing ring and commutating ring has three grooves respectively which locate the slide block and which are supported by expanding springs. In this way, the two rings of the commutating ring and end side can move together. As the outer ring connects the commutating ring by inner tooth, the outer ring and the commutating ring and ring can move together.

During the meshing process, the outer ring is pushed aside (by gear shifting fork) and pushes the ring to the cone surface of the gear. The push force is passed by three slide blocks. The rings being to rotate through the friction of gear cone and the (inner) ring cone. However, as the slide blocks are obstructed by the commutating ring that is the rings are turned, while the outer ring continues moves the rings forward to the cone of the gear. As the rings cannot move forward any more, the outer ring releases the slide blocks and straddles on the rings. Meanwhile, the first contact occurs between the chamfered edge of the ring tooth and the outer ring inner tooth which makes the inner tooth of the outré ring align with the groove of the ring tooth. When the outer ring continues to move forward and slides into the ring, the rings will rotate at the almost same speed with the gear. Therefore, the outer ring can easily slide in the clutch tooth of the clutch.

The first contact mesh is determined by the slide block and groove width or the clearance between slide block and the inner groove.

When the synchronizer is correctly installed on the axle, push and turn each synchronizer and observe whether the mesh is 3/1. Otherwise, it indicates the total wear extent (sum of groove, slide block and chamfered edge tooth) exceeds the limit. In this case, the whole synchronizer assembly must be replaced.

Mesh between synchronizer ring and outer ring chamfered edge tooth:

Chamfered edge tooth contact length of relative top shall exceed 1/3 of chamfered edge length.

9) Synchronizer ring

Measure the width of each groove, examine whether there exists wearing on the slide block groove of each synchronizer ring. If the width exceeds the limit, it must be replaced. (Please refer to Fig.3.2-11).

https://truckmanualshub.com/

Slide block groove width of synchronizer ring	Standard	Operation limit
	10.1mm	10.4mm

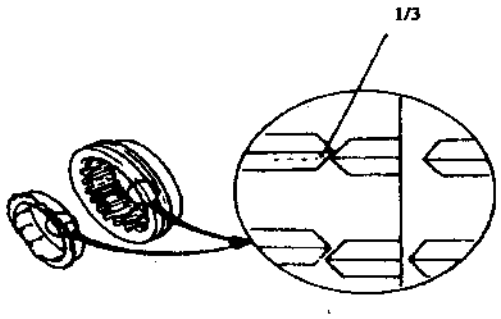

Fig.3.2-10

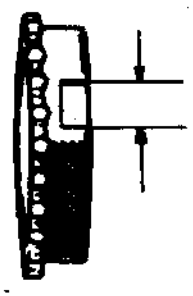

Fig.3.2-11

10) Sizing spring of declutch shift shaft

If the problem of "gear slides out of mesh" occurs, measure the free length of spring. If the free length is less than the operation limit, the spring must be replaced.

Free length of spring	Standard	Operation limit
	25.5mm	21.0mm

11) Handle axle

Examine whether there exists wearing on the handle axle. If occurs, it must be replaced.

As to the rear case lining, measure the radial clearance between the lining hole and slide fork of transmission shaft and examine whether there exists damage on the rear case cover. If the slide fork of transmission shaft can rock in the lining because of wearing, and thus rocks the transmission shaft, the rear case cover of the slide fork of the transmission shaft must be replaced. It is not complete to only replace the lining.

Rocking volume between transmission shaft and lining	Standard	Operation limit
	10.1mm	10.4mm

6. Important steps for installation

Note:

- Each part must be cleaned and the specified gear oil must be coated on the sliding surface of the bearing and gear before installation.
- During reassembly, a new collar ring must be used instead of an old one.
- Tighten each bolt and nut by using the specified tightening torque list in the next part of the section.

1) The second axle and the first axle

Assemble according to the reverse order of disassembly. Pay attention to the installation direction of each washer, gear, commutating ring and outer ring. The cylindrical roller must be attached to the second axle.

① Attach the second gear bearing, the second gear, the synchronizer ring, low speed commutating spring and the outer ring to the second axle. Pay attention to the installation order during operation. After placed on each synchronizer, the three splines of the commutating ring have to be inserted into the grooves of each ring in order.

https://truckmanualshub.com/

Then use the hydraulic press machine to install the first gear lining and the two linings on the second gear are the same.
② Install the first gear needle bearing, collar ring, synchronizer ring, the first gear, cylindrical roller and washer to the second gear. Insert the cylindrical roller into the hole of the axle and install the thrust washer to make its groove locate above the cylindrical roller. To ensure the correct order of the thrust washer, the fillet of the encircle must face to the central bearing of the second axle.
③ Install the central axle, pay attention to the installation order. Install the cylindrical roller and washer. The fillet of the encircle must face to the central bearing of he second axle and the groove must be located above the cylindrical roller during operation.
④ Press the reverse gear lining. Prevent the cylindrical rollers installed based on the step ③ fall out during operation.
⑤ Install the reverse gear bearing, the reverse gear and the reverse gear commutating ring/outer ring. To ensure the correct installation order, the lower diameter and longer cam side must face the transmission rear side during installing the commutating ring and insert the collar ring of the reverse gear into the groove of the second gear.
⑥ Install five gear bearing, five gear synchronizer ring and five gear. Then install the cylindrical roller and the thrust washer, the oil pan of the thrust washer shall face the five gear.
⑦ Press the second gear rear bearing. Insert the collar ring into the groove of the second axle.
⑧ Install the third gear bearing, the third gear, the high speed synchronizing commutating ring/outer ring. The cam side of higher outer diameter shall face the three gear side. Then, insert the collar ring into the groove of the second axle.
⑨ Install the odometer worm shaft to the second axle.
⑩ Install the synchronizer ring, the needle bearing and the first axle.
2) Countershaft and reverse gear countershaft
① Tap the front side of the countershaft into the cover body. And tap the countershaft slightly into the front bearing by using a plastic hammer. On the above-mentioned condition, tap the bearing into the countershaft and the lower cover body.
② Insert the front collar ring of the countershaft into the groove.
③ Install the countershaft reverse gear and five gear to the countershaft. Then tap the rear bearing of the countershaft to the axle.
④ Install the reverse gear countershaft and the washers to the reverse gear axle and then install the pin. Install the completed assembly to the lower cover body.
3) Gear shifting fork, pin and fork pin
Note: The three gear shifting axles have its respectively sizing ball and spring, while the declutch shift shaft shall be orderly installed in the two lock balls and one roller between each axle.
① Install the three sizing springs to the three holes of the upper cover body, and install the sizing ball to the top of the sizing spring in the hole.
② Insert the third and fourth gear declutch shift shaft into the cover body.
③ Press down the sizing ball of the third and fourth gear. After the self-lock pin is installed into the low gear declutch shift shaft, insert the axle into the upper cover body according to ② and ③.. Install the fork and tap the fork axle until the surface between fork axle and fork become flat.
④ Install the lock ball and sizing ball to the upper cover body, insert the axle into the upper cover body according to ② and ③.
4) Transmission lower cover body and upper cover body
① On the condition that the countershaft assembly, reverse gear countershaft and reverse gear axle has been installed to the lower cover body, check whether the two sizing pins locate on the two sides of the lower cover body.
② The two matching surfaces of the upper and lower cover body must be clean.
③ Check whether the thrust washer has been installed in the grooves of the front bearing and middle bearing of the second axle.

https://truckmanualshub.com/

④ Install the first axle and the second axle to the lower cover body.
⑤ Sealant shall be coated evenly on the matching surface of the lower cover body.
⑥ Insert the three gear shifting fork into the three grooves of the outer rings of the second axle respectively and install the upper cover body to the lower cover body.
⑦ Screw the cover body bolt to the specified torque 18-28N • m.
5) The rear case cover
① Check whether the sizing pin has been correctly installed.
② Lubricating grease shall be coated on the oil seal mouth.
③ Clean the rear case cover surface matches with the transmission cover body and coat the sealant evenly on it.
④ The three gear shifting axles must be on the neutral position.
⑤ Install the rear case cover to the transmission cover body and screw the rear cover bolt by apply the specified torque 18-28N • m.
⑥ Clean the gear shifting cover surface matches with the synchronizing transmission cover body and coat the sealant evenly on it.
⑦ Lubricating grease shall be coated on the speedometer driven gear and its lining. Install the speedometer and lining.
6) Front cover of the first axle
① Lubricating grease shall be coated on the oil seal mouth.
② A Clean the contact surface matches with the transmission cover body and coat the sealant evenly on it.
③ Tighten the bolt to the specified torque 18-28N • m.
④ Rotate the first axle of the transmission and check the flexibility of rotation.
⑤ Check the operation condition of each gear selecting and gear shifting axle.
7) Clutch release bearing
Lubricating grease shall be coated on the inner surface of it.

Others
A certain amount of gear oil shall be infused in the transmission according to the complete assembly or reassembly state and the installation condition of transmission.
7. Maintenance and service
Gear oil
Note: Sealant shall be coated on the screwed part of the infusing bolt and draining bolt. Tighten the two bolts to the specified torque 36-54N • m.
Check whether there exists the condition of oil leakage. If occurs, it must be immediately repaired.
Oil capacity of the transmission: 1.3L, type: 80W/90 (GB13985-1992) GL-5 (or GL-4) gear oil or NO.18 hyperbolic curve gear oil.
Note: The existence of oil leakage shall be checked no matter when lift the automobile or make maintenance even if gear oil does not need to be replaced.
8) Tightening torque specifications

Unit: N • m (refer to Fig.3.2-12)

Fastener	Tightening torque
1. Reverse gear cover bolt	18-28
2. Reverse gear lock bolt	8-14
3. Reverse gear arm nut	13-20
4. Reverse gear limit bolt	18-28
5. Tightening upper and lower case cover bolt	18-28
6. Tightened rear case cover bolt	18-28
7. Infusing and draining bolt of transmission	36-64
8. The front cover bolt of the first axle	18-28
9. Clutch release arm nut	10-16
10. Speedometer driven wheel lining bolt	4-7

https://truckmanualshub.com/

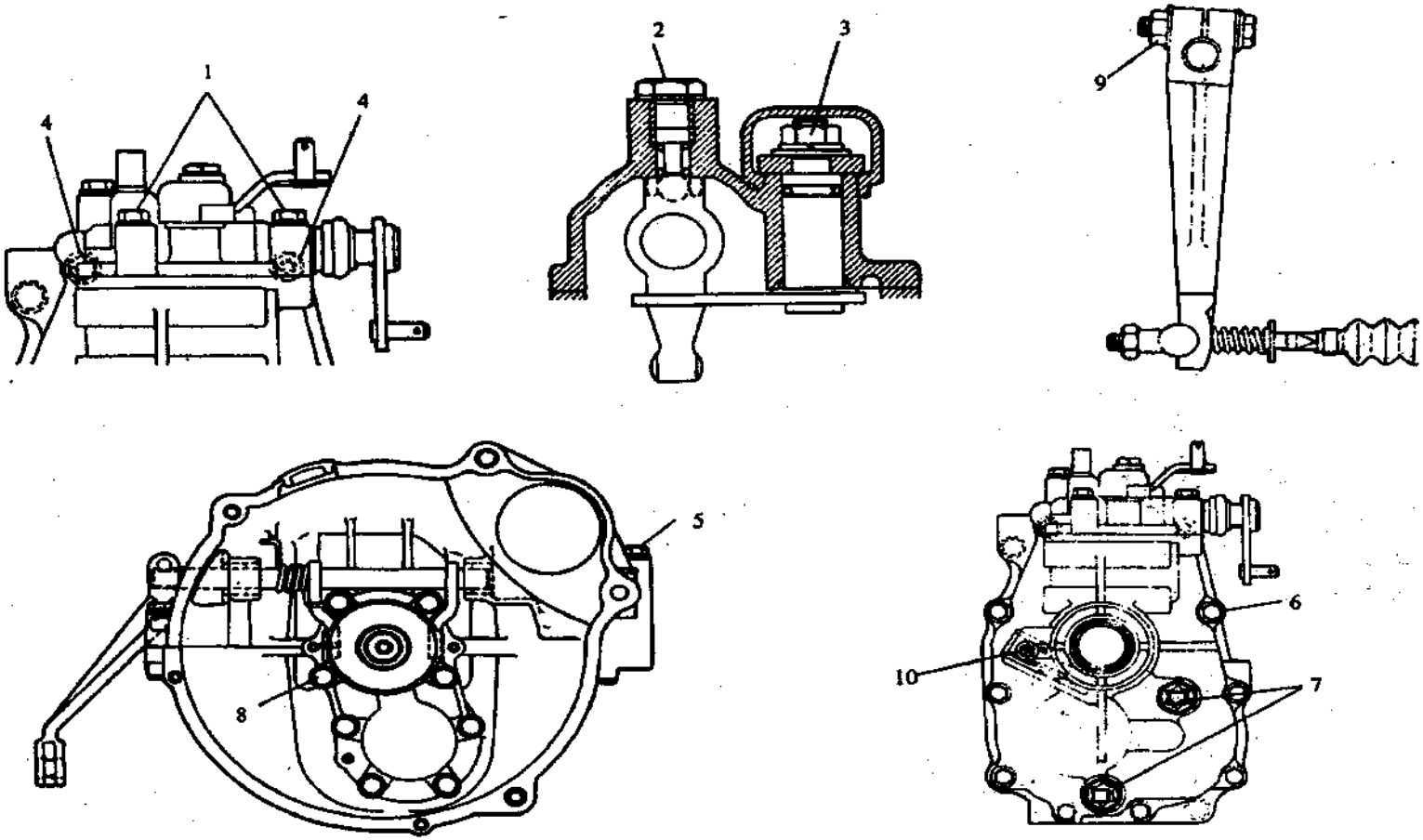

Fig.3.2-12 Tightening Torque Specification

https://truckmanualshub.com/

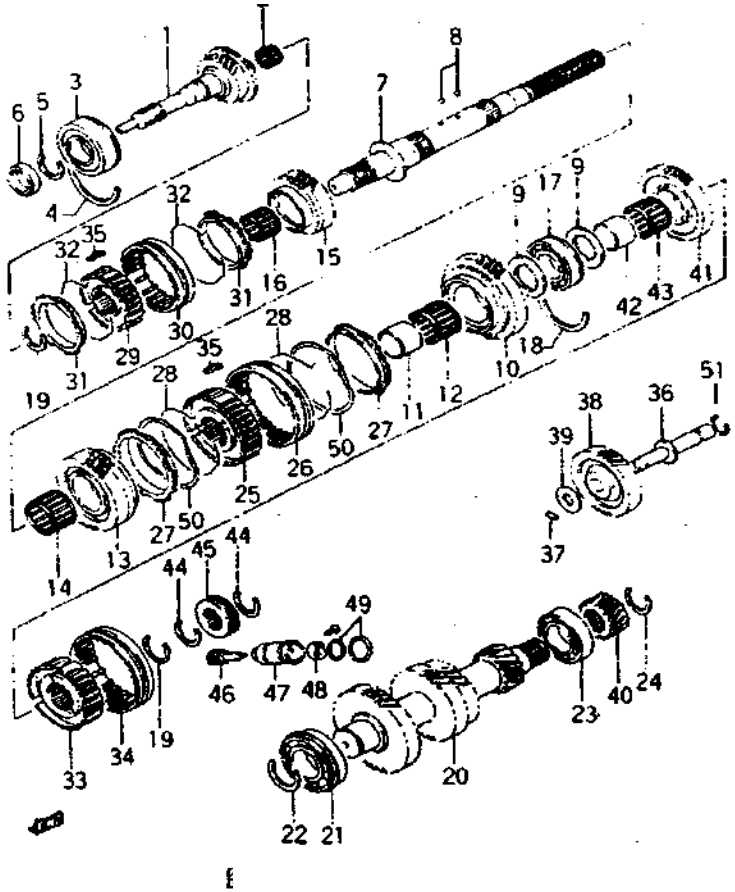

Fig.3.2-13a

1. The first axle assembly 2. Needle bearing 3. The first axle bearing 4. C type lock ring 5. Collar ring 6. Oil seal 7. The second axle 8. Cylindrical roller 9. Thrust washer 10. The first gear 11. Lining 12. Needle bearing 13. The second gear 14. Needle bearing 15. The third gear 16. Needle bearing 17. Bearing 18. C type lock ring 19. Collar ring 20. Countershaft 21. The front bearing of countershaft 22. Collar ring 23. The rear bearing of countershaft 24. Collar ring 25. Low speed commutating ring 26 .Outer ring 27. Low speed synchronizing ring 28. Spring collar ring 29. High speed commutating ring 30. Outer ring 31. High speed synchronizing ring 32. Spring collar ring 33. Low gear commutating ring 34. Outer ring 35. Slide block 36. Reverse gear countershaft 37. Sizing pin 38. Reverse middle gear assembly 39. Shield ring 40. Reverse driving gear 41. Reverse driven gear 42. Lining 43. Needle bearing 44. Collar ring 45. Odometer worm shaft 46. Odometer driven gear 47. Lining 48. Oil seal assembly 49. Rubber ring 50. Elastic ring 51. Collar ring

https://truckmanualshub.com/

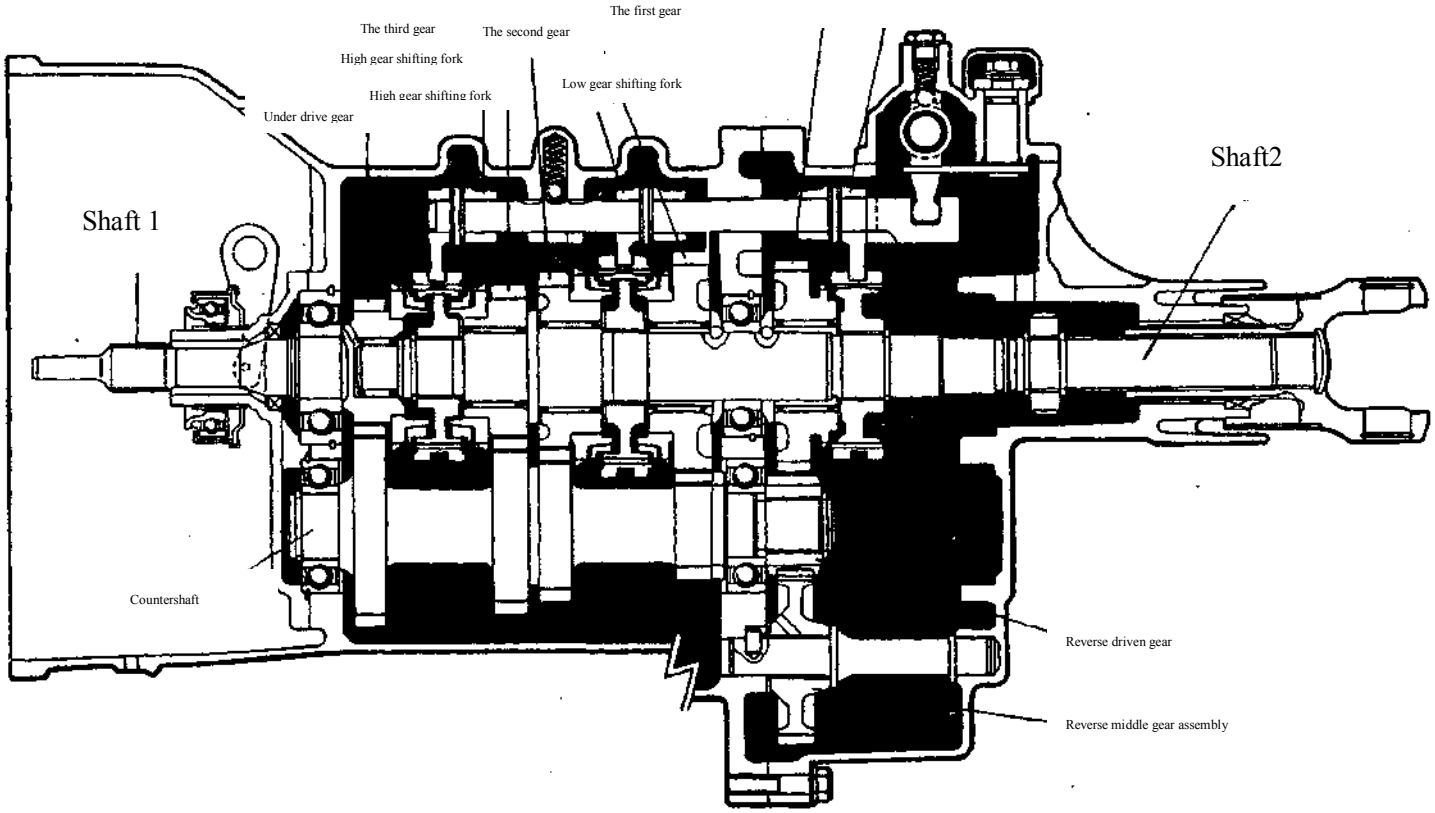

Fig.3.2-13b

III. Transmission (four gear type)

https://truckmanualshub.com/

Note: Please refer to the content of five gear type transmission for the unmentioned aspects.
1. As to the introduction, please refer to Fig.3.2-13a and Fig.3.2-13b.
2. Each gear ration of transmission

The first gear	3.429
The second gear	2.109
The third gear	1.379
The fourth gear	1.000
Reverse gear	3.600

3. Disassembly (please refer to five gear type)
4. Breakdown
Please refer to five gear type for unmentioned aspects.
1) Disassemble the second axle and the first axle.
① Take the first gear out by hand. Do not fall the high speed synchronizing ring.
② Disassemble the collar ring blocks the odometer worm shaft, and slide the high speed synchronizing ring, the third driven gear and needle bearing out from the second axle.
Disassemble the collar ring blocks the odometer worm shaft, and slide the odometer worm shaft out.
③ Disassemble the collar ring which is on the second axle and which blocks the rear bearings.
④ Disassemble reverse gear commutating ring, reverse gear and reverse gear needle bearing.
⑤ Disassemble the bearing lining and the reverse gear lining from the second axle by using hydraulic press machine.
Note: The cylindrical roller may be fallen during the process of disassembly. Do not miss the cylindrical roller. What's more, the ball bearing cannot disassembled simultaneously together with the above-mentioned washers and linings.
⑥ Disassemble the cylindrical roller and the (central) bearing from the second axle.
⑦ Disassemble the first gear, needle bearing and synchronizer ring from the second axle.
⑧ Disassemble the first gear lining, the commutating ring, ring, the second gear and the second gear bearing by using the hydraulic press machine.
2) Disassemble the countershaft
① Disassemble the countershaft connected with gear.
② Disassemble the countershaft rear bearing.
③ Disassemble the countershaft reverse driven gear.
3) Disassemble gear shifting fork and axle
Please refer to five gear type for disassembly method.
5. Inspect the components
Please refer to five gear type for the corresponding method.
6. Important steps for installation
Note:
• Each part must be cleaned and the specified gear oil must be coated on the sliding surface of the bearing and gear before installation.
• During reassembly, a new collar ring must be used instead of an old one.
• Tighten each bolt and nut by using the specified tightening torque list in the next part of the section.
1) The second axle and the first axle
Assemble according to the reverse order of disassembly. Pay attention to the installation direction of each washer, gear, commutating ring and outer ring. The cylindrical roller must be attached to the second axle.
① Attach the second gear bearing, the second gear, the synchronizer ring, the commutating ring/ outer ring to the second axle. Pay attention to the installation order during operation. After placed on each synchronizer, the three splines of the commutating ring have to be inserted into the grooves of each ring in order. Then use the hydraulic press machine to install the first gear lining.
② Install the first gear needle bearing, spring collar ring, synchronizer ring, the first gear, cylindrical roller and thrust washer to the second axle. Insert the cylindrical roller into the hole of the axle and install the thrust washer to make its groove locate above the cylindrical roller. To ensure the correct order of the thrust washer, the fillet of the encircle must face to the central bearing of the second axle.
③ Install the central axle, pay attention to the installation order.
④ Install the cylindrical roller and thrust washer. The fillet of the encircle must face to the central bearing of he second axle and the groove must be located above the cylindrical roller during operation.

https://truckmanualshub.com/

⑤ Press the reverse gear lining. Prevent the cylindrical rollers installed based on the step ④ fall out during operation.
⑥ Install the reverse gear bearing, the reverse gear and the reverse gear commutating ring/outer ring. To ensure the correct installation order, the lower diameter and longer cam side must face the transmission rear side during installing the commutating ring.
⑦ Insert the collar ring of the reverse gear into the groove of the second gear.
⑧ Install the third gear bearing, the third gear, the third and fourth gear synchronizer ring and the commutating ring/outer ring. The cam side of higher outer diameter shall face the third gear side. Insert the collar ring into the groove of the second axle.
⑨ Install the odometer worm shaft to the second axle.
⑩ Install the synchronizer ring, the needle bearing and the first axle.
2) Countershaft and reverse gear countershaft
① Tap the front side of the countershaft into the cover body. And tap the countershaft slightly into the front bearing by using a plastic hammer. On the above-mentioned condition, tap the bearing into the countershaft and the lower cover body.
② Insert the front collar ring of the countershaft into the groove.
③ Install the countershaft reverse gear and the fifth gear to the countershaft. Then insert the rear bearing of the countershaft to the axle.
④ Install the reverse gear countershaft and the shield ring to the reverse gear axle and then install the pin.
3) Gear shifting fork, axle and fork pin
Please refer five gear type for the corresponding installation method.
4) Transmission lower cover body and upper cover body
① On the condition that the countershaft assembly, reverse gear countershaft and reverse gear axle has been installed to the lower cover body, check whether the two sizing pins locate on the two sides of the lower cover body.
② The two matching surfaces of the upper and lower cover body must be clean.
③ Check whether the thrust washer has been installed in the grooves of the front bearing and middle bearing of the second axle.
④ Install the first axle and the second axle to the lower cover body.
⑤ Sealant shall be coated evenly on the matching surface of the lower cover body.
⑥ Insert the three gear shifting fork into the three grooves of the outer rings of the second axle respectively and install the upper cover body to the lower cover body.
⑦ Screw the cover body bolt to the specified torque 18-28N • m.
5) The rear case cover
Please refer to five gear type for the corresponding installation method.
6) Front cover of the first axle
Please refer to five gear type for the corresponding installation method.
7) Clutch release bearing
Please refer to five gear type for the corresponding installation method.
7. Maintenance and service
Gear oil
Note: Sealant shall be coated on the screwed part of the infusing bolt and draining bolt. Tighten the two bolts to the specified torque 36-54N • m.
Check whether there exists the condition of oil leakage before replacing gear oil. If occurs, it must be immediately repaired.
Oil capacity of the transmission: 1.0L, type: 85W/90 (GB13985-1992) GL-5 (or GL-4) gear oil or NO.18 hyperbolic curve gear oil.
Note: The existence of oil leakage shall be checked no matter when lift the automobile or make maintenance even if gear oil does not need to be replaced.
8. Tightening torque specification
Please refer to five gear type.

https://truckmanualshub.com/

Section 3 Driving Axle

I. Introduction

The driving axle in the vehicle is single section, open type and coreless dual universal joints structure. The front end is connected to the transmission output through driving axle splines, the rear end is connected to the real axle cardinal tooth flange through universal joint flange.

The spider of each universal joint is tightly matched with four needle bearings and oil seal.

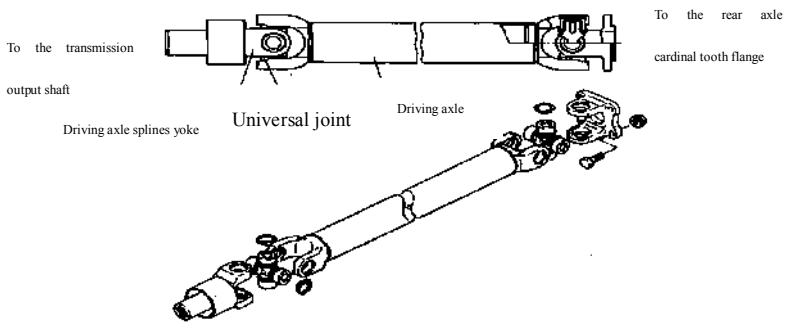

Fig.3.3-1 Driving Axle

https://truckmanualshub.com/

II. Disassembly
1. Lift the vehicle.
2. Disassemble the driving axle bolt and nut.
3. Pull the driving axle.
If the vehicle is lifted horizontally, and the oil height of the transmission oil satisfies the corresponding specification, the transmission oil shall be firstly drained. Then pull the driving axle out from the rear end of the transmission, otherwise the transmission oil will flow out.
C. Assembly
Assemble according to the reverse order of disassembly.
Note:
• Tighten the driving axle bolt and nut by applying the specified tightening torque. The tightening torque of the driving axle bolt shall be 15-25N • m.
• If the oil is drained out in order to disassemble the driving axle, new gear oil which satisfies the specified type shall be infused to the specified oil height after installation of the driving axle.
D. Maintenance and service
As wearing will occur if the driving axle splines yoke, spider and needle bearing are long time used, check these parts to see the existence of wearing in the case that the universal joint produces noise of “chattering”.
The noise made by the universal joint at the economical driving speed is quite regular, so the existence of wearing can be easily recognized. The noise will be particularly distinct on the condition of starting and idler sliding (due to the brake function of the engine inside the power train).
As the driving has experienced strict dynamic balance test, the whole driving axle assembly shall be replaced if the driving axle produces noise.
Disassembly of the driving axle to replace the universal joint can be adopted in the case that special tool is at hand. However, the disassembled driving axle must be made dynamic balance test before assembled to a vehicle.

Section 4 Rear Axle

I. Introduction

The rear axle structure of the vehicle is hypoid gear single stage main retarded, integral pressing and welding axle housing, semi floating half axle.

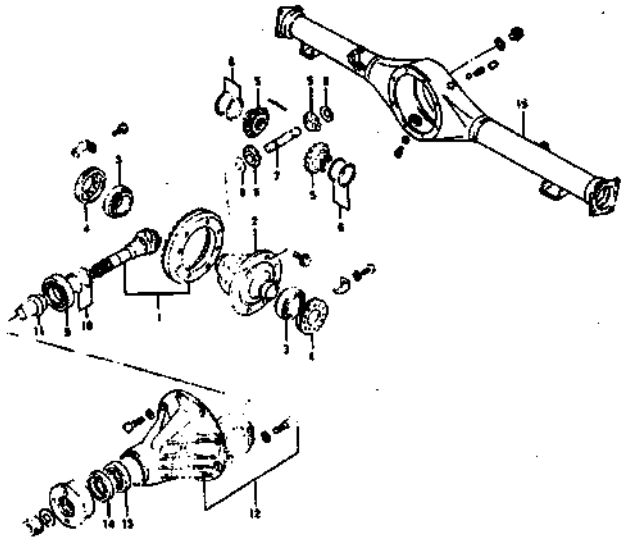

Fig.3.4-1

1. Driving, driven bevel gear 2. Differential housing 3. Cylindrical roller bearing 4. Bearing adjuster 5. Half axle gear, planetary gear 6. Half axle gear pad 7. Planetary gear axle 8. Planetary gear pad 9. Conical roller bearing (7306E) 10. Driving gear adjusting pad 11. Wave shape elastic sleeve 12. Main retarded housing and fastener 13. Conical roller bearing (7305E) 14. Oil seal 15. Rear axle housing welding assembly

https://truckmanualshub.com/

II. Disassembly
1) Release parking brake lever.
2) Lift the vehicle and disassemble the real wheel.
3) Disassemble the oil draining bolt, and drain the gear oil completely from the rear axle.
4) Pull the brake drum out by using M8 bolt.
5) Rotate the sizing spring pin and pull the sizing spring out from the brake shoe.
6) Disassemble the parking brake cross bracing wire from the parking brake draw arm and disassemble the brake shoe.
7) Disassemble the split washer and disassemble the parking brake cross bracing line from the brake bottom board.
8) Disassemble the brake pipe from the brake cylinder. Protect the pipe by using bleeding screw to prevent brake fluid from flowing out.
9) Disassemble the brake bottom board nut from the axle housing flange.
10) Pull the half axle with brake bottom board out by using special tool.
11) Pull the half axle out.
12) Grind the two corresponding parts of the thrust washer to a quite thin extent by using the grinding wheel to disassemble the driving axle bolt.
III. Disassembly
1) Fix the driving conical gear flange to not rotate, and disassemble the lock bolt on it.
2) Mark on the upper cover of two bearing saddles respectively (the upper cover is divided into the right and the left) in order that they can be clearly distinguished during reassembly.
3) Disassembly the upper cover of the right and left side bearing saddles after releasing the bolt used to tighten locking plate and bearing cover blot, and lift the differential assembly from the main retarder housing.
4) Pull the right side bearing from the differential housing by using special tool.
5) Disassemble the bolts of the fastened driven conical gear and the differential housing, and take down the driven conical gear.
6) Pull the planetary gear and the planetary gear shaft after disassembling the elastic cylindrical pin.
7) Pull the left side bearing of the differential by using special tool and take down the half axle gear and half axle gear pad.
IV. Maintenance and service
1. Half axle gear clearance
Compare the measured clearance with the clearance indicated in the following table. Increase or decrease the pad height to adjust the clearance based on particular need.

Half axle gear clearance	0.1-0.2mm
Pad height series	0.9, 1.0, 1.1, 2mm

Note: If the half axle gear clearance of the differential is not easily measured (by applying fuse piece), measure the axial clearance of the half axial gear. If the maximum value is 0.37, it shows the clearance is qualified.
2. Determine the height of driving gear adjusting pad
The number of adjusting pad used on driving conical gear depends on different vehicle. The number of adjusting pad needed on each vehicle must be determined during reassembly in order to located the driving conical gear on the correct position (when the driving conical gear and driven conical gear meshes, suitable clearance can be obtained).
Calculate the height of driven conical gear adjusting pad (refer to Fig.3.4-2).
The adjusting pad between the inner side surface of the driving conical gear rear bearing (30306/P06) and driving conical gear can be calculated according the following formula.

https://truckmanualshub.com/

computation expression: H=C-A-B A=85+δ
in the formula: C means the actual assembly distance of master retarder housing
A means the actual assembly distance of driving conical gear
B means the actual assembly distance of driven conical gear rear bearing (30306/P06)
δ means the difference value between the best actual assembly distance of the driving conical and the theoretical assembly distance
H can only be progressed, not being able to deleted, and the integral times of 0.05 shall be selected.

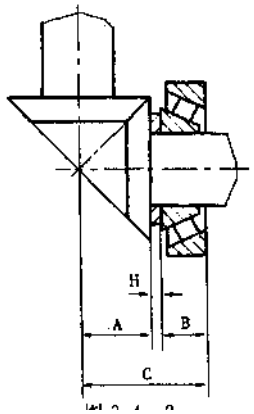

Fig.3.4-2

Five kinds of height for adjusting pad are selectable. Select the suitable pad size and combine them to make their total height reach the wanted height as possible.
The adjusting pad size for driving conical gear is: 0.05, 0.10, 0.30, 0.50, 1.00, unit is mm
3. Adjust the pretension of the driving conical gear bearing
Adjust the pretension of the driving conical gear bearing according to the following steps:
Firstly, press the outer ring of driving conical gear rear bearing and driving conical gear front bearing respectively. Then install the determined adjusting pad of driving conical gear to the driving conical gear and install the inner ring of the rear bearing coated with hyperbolic curve gear oil into the main retarder housing together with driving conical gear. Install the adjusting pad of wave shaped driving conical gear along the driving gear axle, and then press the front bearing inner ring coated with hyperbolic curve gear oil. Finally press the driving gear flange and tighten the locking nut by applying 190N • m tightening torque. Do not install the oil seal. The tightening torque used to rotate the driving conical gear is 0.3-0.7N • m (excludes the friction torque of oil seal). The bearing must be lubricated when measures the pretension of the bearing and the driving conical gear must be rotated 5 rounds continuously along the same direction.
Note:
The wave shaped elastic sleeve will be pressed when rotates the driving conical gear locking nut to adjust the pretension of driving gear bearing. Therefore, a new wave shaped elastic sleeve must be used during adjustment.
4. Adjust the pretension of the differential
Install dial indicator to the flange end of the main retarder, and make the retarder contactor tip to the left side bearing cover end. Release the right side (driving conical gear side) adjuster for one round and then tighten it until the contactor of the dial indicator begins to start. Then rotate the adjuster for one or two grooves, the pretension load of the differential is 0.3-0.7 N • m.
5. Examine and adjust the flank clearance of the driving and driven conical gear
Examine the driving and driven conical gear clearance by using method indicated on Fig.3.4-3. Pay attention to apply the regular method to install the differential assembly, and screw the bearing cover nut to 10-20N • m. Align the dial indicator spindle to the “root” of the driving conical gear driving side (two flange sides), fix the driving conical gear tightly and rotate the gear back and forth. The reading number of the dial indicator is the clearance value, and the flank clearance value range shall be 0.1-0.2mm.

https://truckmanualshub.com/

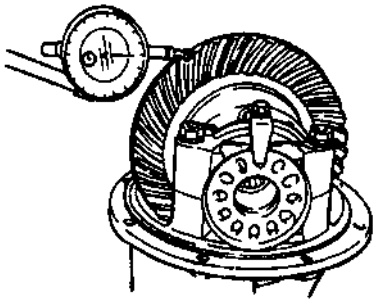

Fig.3.4-3

Rotate the left and right side adjuster and change the axial position of the driven conical gear and thus adjust the flank clearance of the driving and driven conical gear. The back and forth of the left side and right side adjusters must be equal in order to not alter the adjusted bearing pretension. Measure the flank clearance on the position of about trisection of the driven conical gear, the value shall be in the range of 0.1-0.2mm and clearance variation shall not exceed 0.08mm.

6. Examine and adjust the tooth flank contact mark graph of the driving and driven conical gear

The driving and driven conical gear mesh shall have suitable clearance, and fine tooth flank contact condition as well to avoid "gear noise" and prevent the standard double side gear tooth flank from enduring excessive pressure during the process of driving. The following method shall be used to examine the contact condition between driving conical gear and driven conical gear after obtaining the specified clearance effect: coat leaded ointment on the positive driving tooth flank and negative driving tooth flank of the gear, then hold the driving conical gear to make it "brake and stop" by one hand and rotate the driven conical gear back and forth by the other hand. Examine the tooth flank contact by referring to the following graphs after obtaining the mark graph. (Fig.3.4-4)

Mesh mark of driving and driven conical gear and clearance adjustment

Mesh mark of driving and driven conical gear	Adjustment method	
Convex side (positive driving) Concave side (negative driving)		
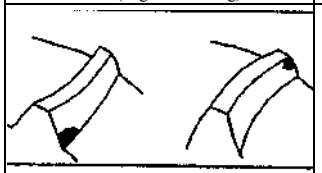	Move the driven conical gear to the driving conical gear, take the driving conical gear away if the clearance is too small	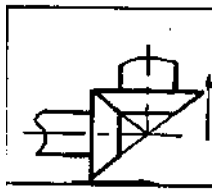
	Move the driven conical away from the driving conical gear, and move the driving conical gear nearer if the clearance is too much	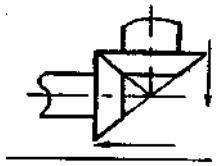
	Move the driving conical gear to the driven conical gear, take the driven conical gear away if the clearance is too small	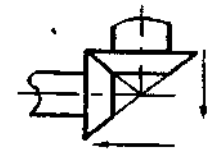
	Move the driving conical away from the driven conical gear, and move the driven conical gear nearer if the clearance is too much	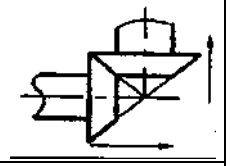
	Correct graph About right oriented on the central position	

Fig.3.4-4

https://truckmanualshub.com/

7. Tighten the differential bearing cover bolt by applying the tightening torque of 50-60N •m after adjusting the gear meshing mark. Install the adjuster locking piece and take down the driving gear conical gear flange. Lubricating grease shall be evenly coated between the mouth and assistant mouth of driving conical gear oil. Sealant shall be coated on the oil seal outer diameter and then press the oil seal into the main retarder housing. Install the driving gear flange and tighten the nut by applying the tightening torque of 120-190N • m, and lock the nut by sing rivet as well.

V. Assembly

Assemble according to the reverse order of disassembly. Pay attention to the following points.

Note:

• The driving conical gear and the driven conical gear must be replaced in pair.

• Tightening torque

Items	N • m
Differential bearing cover bolt	50-65
Driven conical gear and differential housing bolt	65-80
Driving conical gear nut	120-190
Oil draining bolt	40-70

• Driven conical gear bolt

Bolt tightened from the driven conical gear to the differential housing will be experienced cutting force when transmitting torque. Therefore these bolts are specially manufactured bolts and cannot be substituted by common bolts. The bolts must be coated with thread locking grease when installs the driven conical gear to the main retarder housing and then tighten them.

• Driving conical gear bearing

Install the two conical roller bearings to the driving conical gear by using the forcing machine only cooperating with special tool. Press the outer ring into the main retarder housing, while press the inner ring into the driving conical gear.

• Differential end bearing

Install the bearings into the differential housing by applying special tool. Do not apply tapping method to install the bearings.

VI. Assembly

Assemble according to the reverse order of disassembly.

1. Assemble the half axle assembly

1) Install the left or right brakes, bearing isolation washer, bearing with dust proof cover (6027-Z/P6) to the half axle in order. Then press the bearing on the forcing machine. Press the bearing isolation washer to neighbor the shaft shoulder and the bearing can run freely.

2) The inner hole incline face of the bearing isolation washer shall be installed to the direction of half axle convex shoulder.

3) The dust proof cover shall be towards the half axle convex shoulder when installs the bearing. And the cover shall be installed evenly on the position of inner ring.

4) The NO.2 lithium based lubricating grease shall coated on the bearing with dust proof bearing (6027-Z/P6). No foreign matters shall be affixed to or entered in.

5) Put the new bearing thrust washer in the pot arch and warm it to 100-150℃ and install it to the half axle after keeping 10-15 minutes. Press it to the bearing by applying the forcing machine, the contact part shall be coated with lubricating oil before pressing.

6) The thrust washer shall not have the axial and radial looseness action after pressing.

Note: Protect the outer surface of the thrust washer to avoid damages.

7) Water proof sealant shall be coated on the joint point between the rear axle and brake bottom board.

8) Install the half axle into the rear axle housing and screw the nuts used to tighten the brake bottom board to the specified tightening torque 18-28N • m.

9) Disassemble the deflation screw protecting cap from the pipe end and connect the brake pipe to the brake cylinder and then screw the pipe joint to the specified tightening torque 14-28N • m.

10) Water proof sealant shall be coated on the contact surface between brake bottom board and parking brake cross bracing wire, then thread the parking brake cross bracing wire into the brake bottom board and tighten it by using split washer.

https://truckmanualshub.com/

11) Connect the parking brake pulling arm to the parking brake cross bracing wire and install the brake shoe on it.

12) In order to maximize the clearance between parking brake shoe and parking brake drum, put the screw into the self adjusting meshing position of brake clearance and push the gear segment according to the method indicated below before installing the brake drum (Fig.3.4-5).

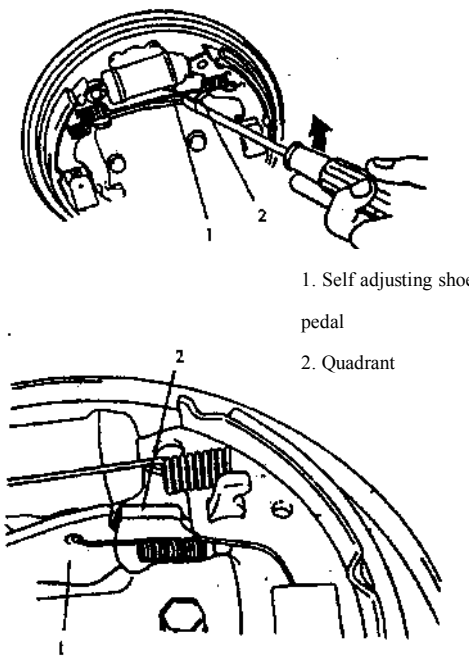

1. Self adjusting shoe clearance push pedal
2. Quadrant

Fig.3.4-5

2. Assemble the rear axle housing assembly

1) The rear axle housing assembly must be cleaned and no foreign matter enters it before assembly.

2) Put the oil baffle disc oil retaining disk of half axle oil seal into the welding assembly. Press the rear assembly welding assembly in after the hyperbolic curve gear oil is coated on the half axle oil mouth and assistance. If there exists any mark of leakage or the oil seal is taken down, a new oil seal must be used before reassembly.

3) The spring side shall face the differential when pressing the oil seal. Put in the oil seal metal framework and evenly press in. The oil seal shall not be inclined and the sealant shall be coated on the outer diameter matching position. No remaining grease shall be left on the non matching position.

Press the half axle and oil baffle disc oil retaining disk of half axle. No clearance and release shall be allowed.

3. Assemble the main retarder assembly

1) Assemble the rear assembly to the assembly fixture.

2) Plane sealant shall be coated on the flange or rear axle housing of the main retarder assembly (no remaining grease shall be left on the non matching position) and install the main retarder assembly to the rear axle housing assembly. Screw thread locking sealant shall be coated on the eight combined bolts CQ1420825 and tighten it by applying the tightening torque of 15-33N • m.

3) Install the left and right half axle assembly into the left and right side of the rear axle assembly. Install the bolt and washer through the position of half axle facing the master spline and the bolt hole position of the axle housing flange, the tightening torque shall be 18-28N • m.

4) Rear axle assembly gear oil

Type:80W/90W or 85W/90(GB13895)

Oil capacity: 1.3L

https://truckmanualshub.com/

Assembly data of rear axle Tightening torque unit: N • m

Items	Specification	Standard value
Pretension load of driving conical gear bearing (excludes oil seal resistance moment)	30305/P6 30306/P6	0.3-0.7
Pretension load of differential bearing	6027-Z/P6	0.3-0.7
Flank tooth clearance of driving and driven conical gear		0.1-0.2mm
Hyperbolic curve gear oil capacity of rear axle		1.3L
Tightening torque of driving conical gear locking bolt	M18×1.5	120-190
Tightening torque of driven conical gear and differential housing tighten bolt	M10×1.25	65-80
Tightening torque of differential bearing cover bolt	M10×1.25	50-65
Tightening torque of adjuster lock piece tighten bolt	M8	15-20
Tightening torque of tighten main retarder assembly and axle housing bolt	M8	15-23
Tightening torque of tighten brake bottom board used bolt	M8	18-28
Oil infusing bolt	M20×1.5	35-50
Oil draining bolt	M12×1.25	40-70

https://truckmanualshub.com/

Section 5 Suspension System

I. Introduction

Front suspension: slide column oscillating arm type independent suspension, coil spring and being installed with antis-way bar. Bilateral hydraulic solid bowl type retarder. Please refer to Fig.3.5-1.

Rear suspension: lengthwise sub elliptical leaf spring, the rear end is the swinging ring structure. Bilateral hydraulic solid bowl type retarder. Please refer to Fig.3.5-2.

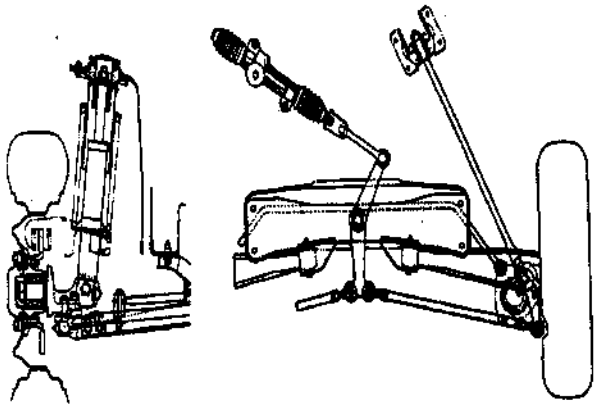

Fig.3.5-1 Front suspension system

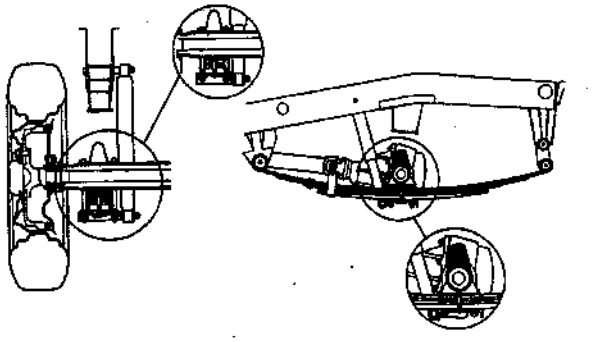

Fig.3.5-2 Rear suspension system

Note:

- The fasteners of all suspension system are quite essential and can effect the performance of the main components and the system. The fasteners of the same or equal design code must be used when replacing the fasteners. Screw the fastener to the specified torque value when replacing the fasteners.
- The suspension system components can only be replaced, and cannot be heated and straightened by quenching.

II. Front suspension system

1. Stabilizing pull rod

Disassembly

(1) Support the vehicle and disassemble the wheels.

(2) Disassemble the front nut of stabilizing pull rod.

https://truckmanualshub.com/

(3) Disassemble the rear nut of stabilizing pull rod.
(4) Disassemble the stabilizing pull rod.
Examination
(1) Replace the stabilizing pull rod if there exists damage or deformation on it.
(2) Replace the cushion pad if there exists damage, wearing or deterioration on it.
Assembly:
Assemble according to the reverse order from (1) to (4) of disassembly. Pay attention to that the large end of the two cushion pad face to each other and shall not be reversibly attached. Screw the nut to the specified torque. As is indicated in Fig.3.5-3.

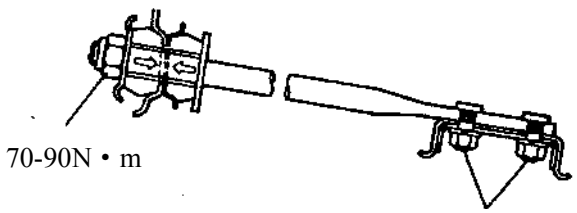

Fig.3.5-3

2. Front cushion pad and coil spring
Disassembly::
(1) Support the vehicle and disassemble the wheels.
(2) Disassemble the oil pipe clamp card used to fix the front brake hose and disassemble the front brake hose from the oil pipe support bracket of the retarder.
(3) Release the nut of the retarder piston rod upper end to facilitate the next disassembly work to the retarder and coil springs.
(4) Disassemble the binding bolt and sizing bolt of the front retarder and the steering knuckle.
Note: Safety board shall be put under the cantilever to avoid the cantilever fall onto the front brake hose. Otherwise, the hose will be damaged.
(5) Disassemble the fixing nut on the upper support point and fender flap. Hold the front retarder to avoid its fall.
(6) Disassemble the retarder and coil springs. If it is difficult to disassemble the front retarder from the steering knuckle, the screw or equivalent tool can be used to larger the clearance the of steering knuckle to facilitate the disassembly of the front retarder.
Disassembly
(1) Press the coil spring by applying special tool.
(2) Keep the coil spring on the pressed condition. Disassemble the piston rod nut and then breakdown the components.
Assembly: please refer to Fig.3.5-4
(1) Press the coil spring by applying special tool.

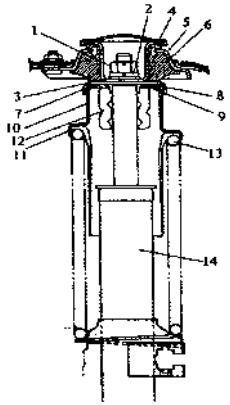

Fig.3.5-4

1. Piston Rod Nut 2. Coil Spring Washer 3. Plain Washer 4. The Upper Support Point Lining 5. The Upper Support Point Bottom Board 6. The Upper Support Point Rubber Filler Block 7. Passive Pad 8. Rubber Pad 9. Active Pad 10. Spring Upper Base 11. Piston Rod Protective Cover 12. Piston Rod Cushion Cover 13. Spring Coil 14. The Front Retarder

https://truckmanualshub.com/

(2) Put the coil spring on the spring bottom base of the retarder and match its end and the ladder part of the spring bottom base.
(3) Install the piston rod cushion cover to the piston rod. Pay attention to its direction and do not reverse install it.
(4) Pull the piston rod upward as possible, and keep it in its longest position.
(5) Match the upper end of the spring and the ladder part of the protective cover when installs the piston rod protective cover. And then install the spring upper base to the protective cover in the same way.
(6) Lithium base lubricating oil used on vehicle shall be coated on the active pad after cleaning it. Install it to the spring upper base. Pay attention to the direction.
(7) Lithium base lubricating oil shall be coated on all the surface of the rubber pad and install it along the outer ring of the active pad.
(8) Clean the passive pad and install it by applying the method indicated in the Fig.
(9) Install the upper support point rubber filler block, upper support point bottom board and upper support lining on the passive pad in order. Pay attention to the direction. Screw the piston rod nut to the specified torque, and water resistant coating (oil paint type) around the nut and piston rod threw thread.
Note: Ensure the upper support point rubber filler block has been correctly installed on the upper support bottom board. Installation shall be precise.
(10) Release the special tool, and reexamine the ladder part of the spring base and spring end to see whether they are matched the same as the above mentioned steps from (2) to (5).
Assembly: Please refer to Fig.3.5-5.
(1) Insert the retarder into the steering knuckle.
(2) Align the hole of the retarder support structure with the bolt hole of the steering knuckle, and install the sizing bolt.
(3) After aligning the concave hole of the retarder lower end with the bolt hole of the steering knuckle, thread the steering knuckle bolt in along the direction of the front and rear of the vehicle. Then install the washer and nut.

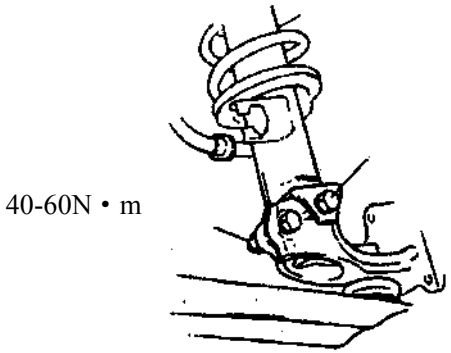

Fig.3.5-5

(4) Install the retarder to the body and screw the nut to the specified toque: 20-30N • m.
(5) Screw the sizing bolt of the steering knuckle and steering knuckle nut to the specified torque respectively. Please refer to Fig.3.5-6
(6) Install the brake hose. Do not torsion the hose. The oil pipe clamp card shall be correctly installed. 25-35N • m

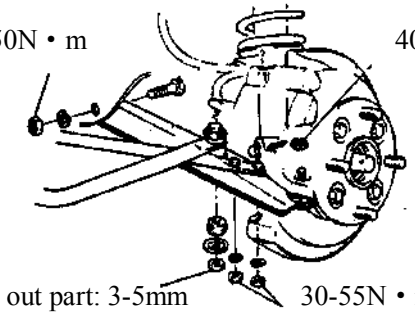

Fig.3.5-6

https://truckmanualshub.com/

3. Cantilever

Disassembly

(1) Support the vehicle and disassemble the wheels.

(2) Disassemble the antisway bar nut, washer and lining from the cantilever.

(3) Disassemble the stabilizing pull rod rear end nut from the cantilever.

(4) Disassemble the cotter pin of oversize ball pin and hexagon slotted nut.

(5) Disassemble the bolt, nut and washer connected with cantilever and middle arm.

(6) Disassemble the oversize ball pin from the steering knuckle together with cantilever. Pay attention to protect the screw thread of the oversize ball pin.

(7) Disassemble the cantilever.

(8) Press the cantilever lining out by applying special tool and hydraulic machine.

Examination

(1) Examine whether there exists crack, deformation and damage.

(2) Examine whether the rotating and swinging process of the oversize ball pin is in balance.

(3) Install the antis-way bar to the cantilever by applying cushion pad, washer, bolt and nut. Screw the nut to the extent which can be done by hand. Please refer to Fig.3.5-8.

(4) Install the stabilizing pull rod to the cantilever, and screw the nut to the extent which can be done by hand.

(5) Install the ball pin to the steering knuckle.

(6) Screw all the screws and nuts to the specified torque. Please refer to Fig.3.5-6.

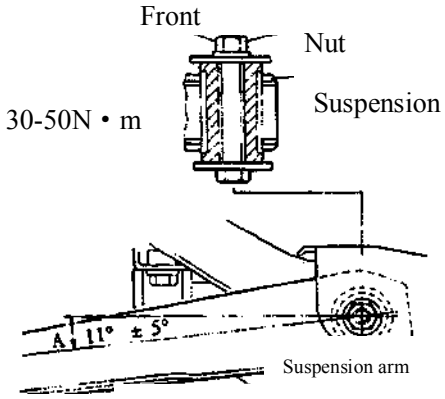

Fig. 3.5-7

(7) Install the cotter pin to the ball pin and castellated nut, the oil paint shall be coated to avoid rust.

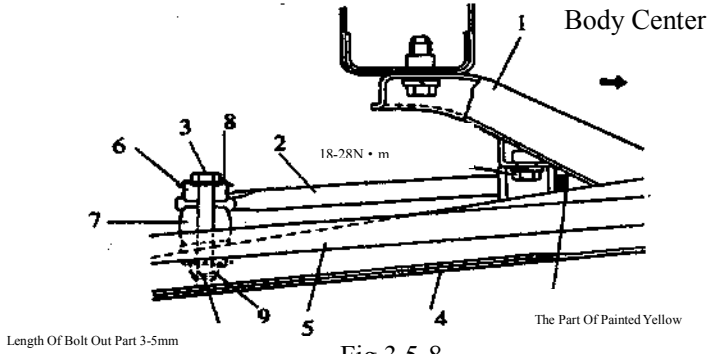

Fig.3.5-8

1. Middle Arm 2. Antis-way Bar 3. Bolt 4. Cantilever 5. Track Rod Lever 6. Cushion Cover I 7. Cushion Cover II 8. Washer 9. Hexagon Nylon Ring Locking Nut

https://truckmanualshub.com/

4. Antis-way bar
Disassembly
(1) Support the vehicle and hang up the front suspension.
(2) Disassemble the left and right wheels.
(3) Disassemble the antis-way bar.
Examination: Examine whether there exist damage or deformation on the antis-way bar and cushion cover. And replace it based on particular condition.
Assembly: Please refer to Fig.3.5-8
(1) The part which is painted yellow shall be aligned with the left lining when installs the antis-way bar.
(2) Screw the bolt and nut to the specified torque.
C. Rear suspension system
1. Retarder
Disassembly
(1) Disassemble the nut of the bottom board pin.
(2) Disassemble the upper end nut, and disassemble the retarder.
Assembly
(1) Install the retarder by referring to Fig.3.5-9.
(2) Tighten the nut.
2. Leaf spring (Refer to Fig.3.5-10)
Disassembly
(1) Support the vehicle and disassemble the rear wheels. Hold the rear axle housing by using a safety stand.
(2) Disassemble the rear wheels and pull the parking brake cross bracing wire out from fixing adhesive tape.
(3) Disassemble the U bolt nut.
(4) Disassemble the steel plate pin nut and spring eye bolt nut.
(5) Pull the spring eye bolt out and disassemble the leaf spring form the steel plate pin.
Assembly
Assemble according to the reverse order of disassembly.
Note:
- Suds shall be sprayed on the lifting eye lining to facilitate to press the lining. No oil shall be on the lining.
- Install the steel plate pin from the vehicle center to the outer side.
- Align the central bolt and nut of the leaf spring with holes of U bolt bottom board, and screw the U bolt to the specified torque.
- Screw the steel plate pin nut and spring eye nut to the specified torque on the free load condition. The tightening torque for steel plate pin nut is 30-55N • m.
- Fix the parking brake cross bracing wire by using fixing adhesive tape.
- Install the rear wheels and tighten it to the specified torque.

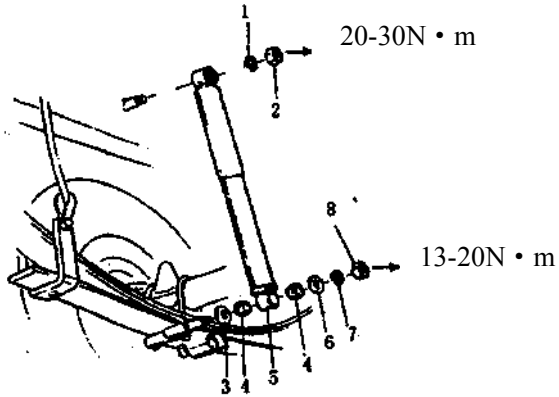

Fig.3.5-9

1. Spring Washer 2. Nut 3. Plain Washer 4. Rubber Lining 5. Rear Retarder
6. Plain Washer 7. Spring Washer 8. Nut

https://truckmanualshub.com/

Leaf spring
The side must be aligned for each leaf spring

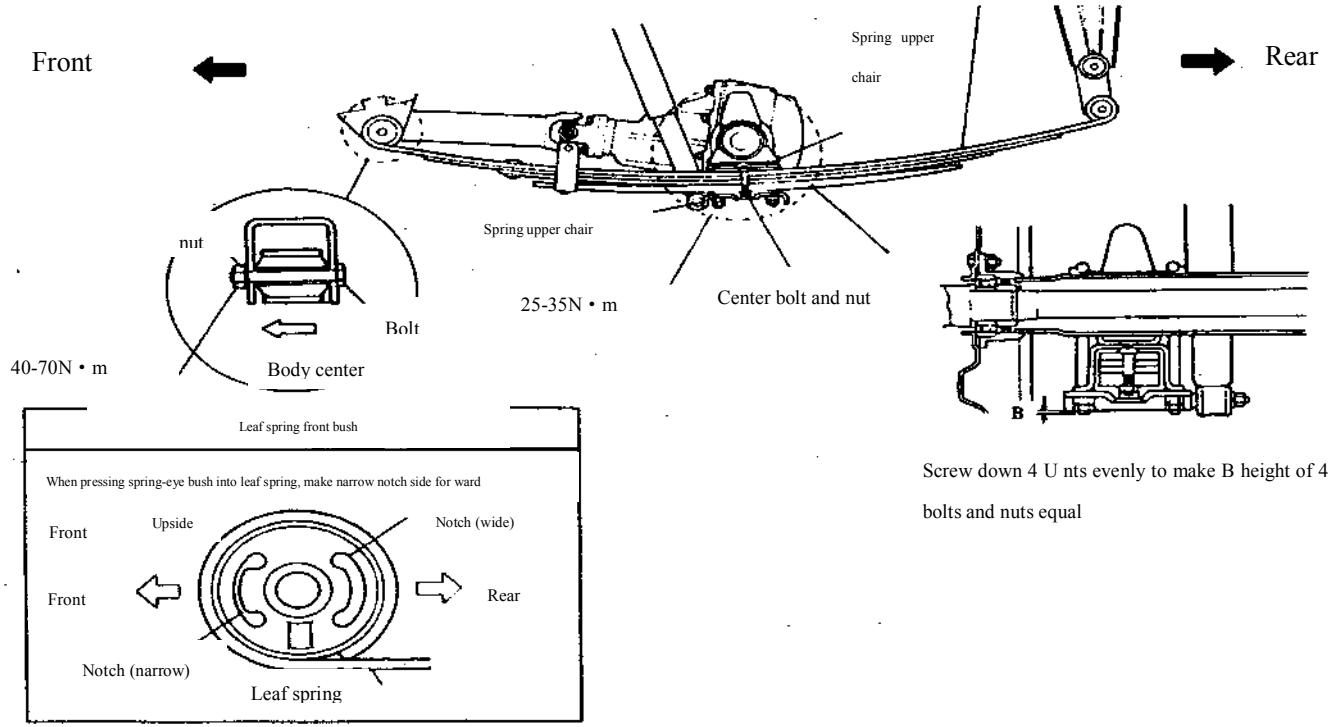

Fig. 3.5-10

https://truckmanualshub.com/

Section 6 Steering System

I. Introduction

Steering system consists of rack and pinion system and corresponding steering echelon form assembly. Rack and pinion is composed of gear shaft, pinion and the housings which enclose the two above mentioned components. Gear shaft support is on the deep groove ball bearing without inner ring and needle bearing in the housing. The end of the pinion is on the housing end lining and the other end is on the adjusting bolt with pressure spring. The gear shaft is inclined installed on the pinion and the setting angle is 2° 54″ and directly meshes with the pinion. When the steering wheel is rotated, the gear shaft is therefore rotated, and the pinion slide along the determined axis by the bearing lining. Transmission mechanism is lateral shift input, one pinion end outputs through longitudinal pull rod and is transmitted to the steering knuckle of the steering wheel through steering cross pull rod.

The major components in the steering system are as indicated in Fig.3.6-1.

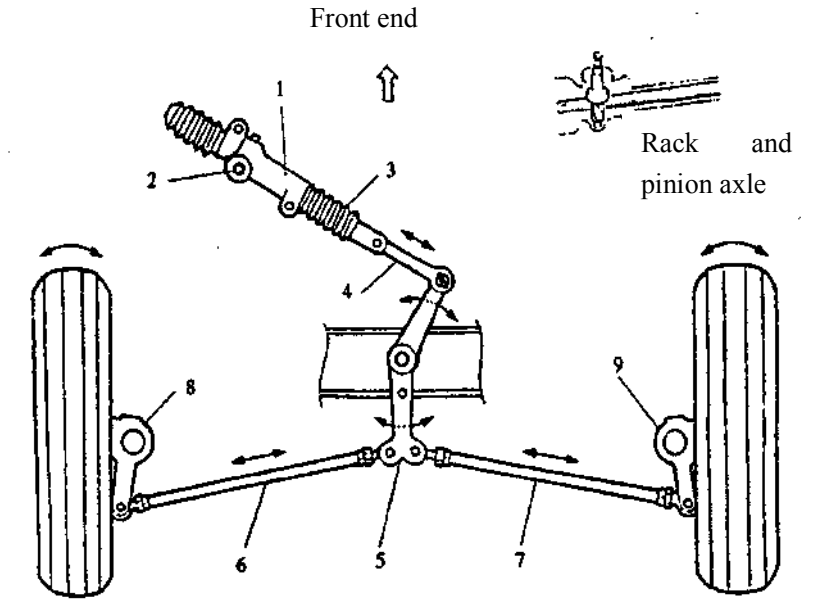

Fig.3.6-1 Steering system

1. Steering gear assembly 2. Gear oil 3. Dust proof cover
4. Steering longitudinal pull rod 5. Main steering arm 6 7. Steering cross pull rod assembly 8. Left steering knuckle
9. Right steering knuckle

https://truckmanualshub.com/

Please refer to Fig.3.6-2 to see the steering gear assembly.

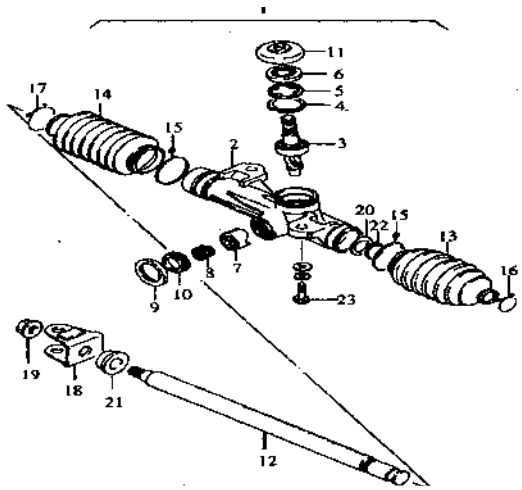

Fig.3.6-2 Steering Gear Assembly

1. Steering gear assembly 2. Steering gear housing assembly and lining assembly 3. Gear shaft assembly 4. Elastic collar used for holes 5. Collar ring 6. Steering gear oil seal assembly 7. Plunger assembly 8. Pressure spring 9. Locking nut 10. Adjusting nut 11. Dust proof cover 12. Pinion 13. Dust proof cover I 14. Dust proof cover II 15. Steel wire locking thread 16. 17. Steel wire type elastic collar 18. Boom assembly 19. Hexagon flange side nut 20. Limit collar ring 21. Limit seat ring 22. Elastic collar ring for axle 23. Hexagon bolt

II. Disassembly

1. Steering wheel

1) Disassemble the negative wiring of the battery.

2) Disassemble the steering wheel horn cover.

3) Disassemble the steering shaft nut.

4) Steering wheel and steering column shall be marked to facilitate to be located during reassembly.

5) Disassemble the steering wheel.

2. Unit switch

1) Disassemble the upper cover of the unit switch after disassembling the steering wheel.

2) Disassemble the leading wire and clip from the universal joint.

3) Disassemble the unit switch assembly form the steering bearing frame.

3. Steering Bearing Frame

1) Disassemble the upper side bolt of the universal joint boom after disassembling the steering wheel and unit switch.

2) Disassemble the four assembling bolts on the steering bearing fixing frame.

3) Disassemble the steering bearing frame with steering shaft assembly.

If there exists damage on any component of the steering bearing frame (with steering shaft), the component must be replaced. Lubricating grease must be coated on the inner side of rubber bearing and the part between rubber bearing and pad before installing the steering shaft to the steering bearing frame. Tight the elastic collar ring for axle in the ring groove of the steering shaft.

4. Universal joint of steering shaft

1) Disassemble the protective cover of the universal joint of steering shaft and universal joint bolt of the steering shaft.

2) Adjust the front wheel to make it face direct front direction.

3) Disassemble the universal joint of steering shaft.

https://truckmanualshub.com/

5. Steering cross pull rod
1) Support the vehicle and disassemble the wheels.
2) Disassemble the cotter pin and steering cross pull rod groove type nut from the steering knuckle. Disassemble the steering cross pull rod ball pin assembly.
3) Mark the position of steering cross pull rod locking nut on the corresponding position of ball pin assembly screw to facilitate to assembly and adjust.
6. Steering gear
1) Disassemble the cotter pin of the steering longitudinal, groove type nut and pin axle after disassembling the wheels.

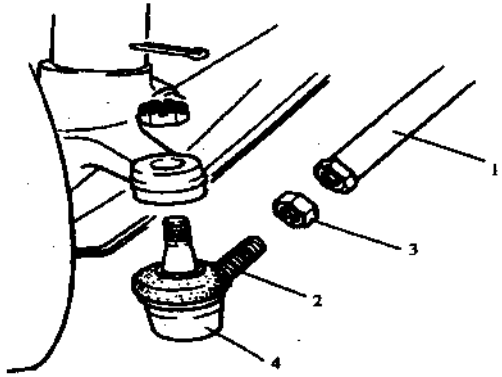

Fig.3.6-3

1. Steering cross pull rod 2. Mark on the point 3. Steering cross pull rod end locking nut 4. Steering cross pull rod ball pin assembly

2) Disassemble the joint bolt between the steering shaft connector and gear shaft axle part.
3) Disassemble the binding bolt of the steering gear and disassemble the steering gear.
4) Disassemble the steel wire type elastic color ring of the steering gear tow ends and steel wire locking wire, and disassemble the dust proof cover.
5) Disassemble the elastic shield ring for axles on the pinion and limit shield ring. Disassemble the plunger assembly.
6) Disassemble the gear shaft dust proof cover, oil seal, elastic shield ring for holes and collar ring.
7) Disassemble the gear shaft assembly from the steering gear assembly, and disassemble the gear shaft.
8) Disassemble the pinion from the steering gear housing.
9) Pull the needle bearing which only has pressing outer ring out from the steering housing by applying special tool.
III. Assemble the steering gear
1) All the components which will be reassembled must be cleaned.
2) Lubricating grease shall be coated on the needle bearing which only has pressing outer ring.
3) Press the needle bearing in the matching position of the steering housing by applying special tool. Ensure the correct assembly of needle bearing.
4) Lubricating grease shall be coated on the housing lining and all the tooth face of the pinion.
5) Slide the pinion into the steering gear housing.
6) Lubricating grease shall be coated on the gear shaft, gear shaft needle bearing and housing oil seal mouth etc.
7) Assemble the gear shaft assembly.
8) Set the collar ring into the ring groove of the steering gear housing tightly, and install the elastic shield ring for holes. The outstanding part “A” shall face the open part of the elastic shield ring and install the oil seal (new oil seal must be used). Please refer to Fig.3.6-4.

https://truckmanualshub.com/

9) Lubricating grease shall be slightly coated on the sliding part which the plunger against the pinion, sealant shall be coated on the adjusting bolt. Then screw the locking nut to its maximum value and rotate it 0-90º and examine the rotating torque of the gear shaft and the smoothness of the whole action of the pinion as well.

Rotating torque of gear shaft	0.5-1.5N • m

10) Screw the locking nut to the specified torque after adjustment. Please refer to Fig.3.6-5.
11) Install the collar ring and elastic shield ring. Set the elastic shield ring in the ring groove of the pinion tightly.
12) Align the dust proof cover with the steering gear housing and convex groove of the steering pinion and locate the position. Tighten them with steel wire locking thread and steel wire type elastic collar ring. Check the dust proof cover to ensure no torsion and hollow after tightening.
13) Install the pinion boom and screw the nut to its specified torque. Please refer to Fig.3.6-6. Install the pinion frame, parallel the surface "A" of the steering gear housing with surface "B" of the boom.

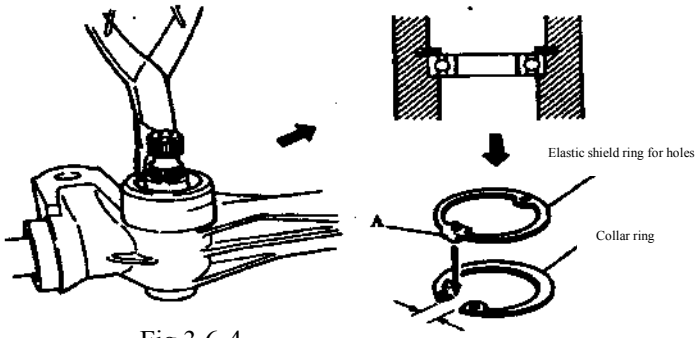

Fig.3.6-4

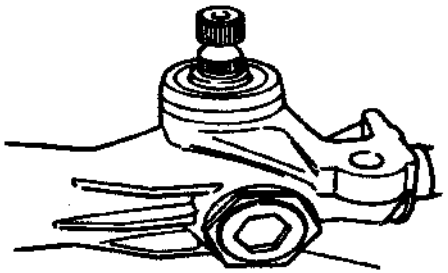

Fig.3.6-5

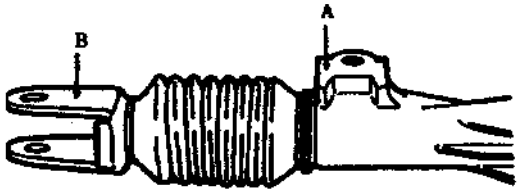

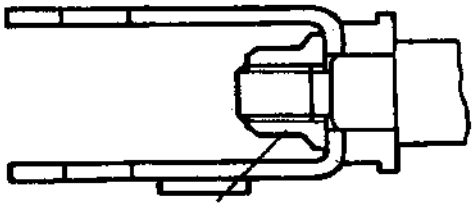

40-60N • m

Fig.3.6-6

https://truckmanualshub.com/

IV. Assembly

1. Steering gear assembly

1) Set the front wheels (left and right) at the right front driving position.

2) Rotate the gear shaft to adjust the length of the pinion to reach the indicated value in Fig.3.6-7, set the steering pinion at the straight driving position.

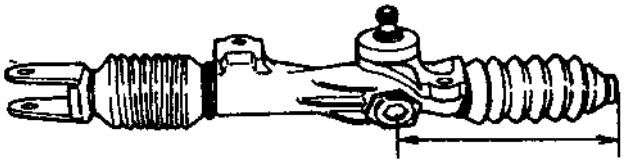

Fig.3.6-7

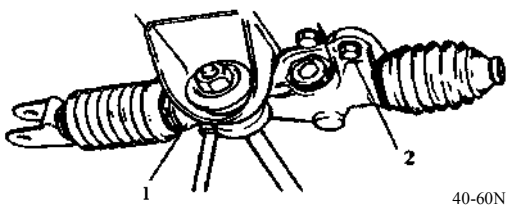

40-60N • m

1.Steering gear assembly

2.Steering gear assembling

Fig.3.6-8

3) Then insert the steering gear shaft into the splined groove of the steering gear shaft connector.

4) Fix the steering gear assembly on the body framework and screw the steering gear assembling bots to the specified torque. Please refer to Fig.3.6-8.

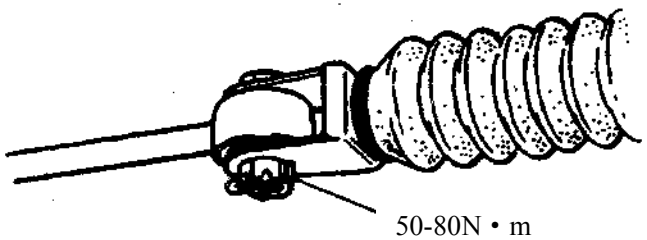

Fig.3.6-9

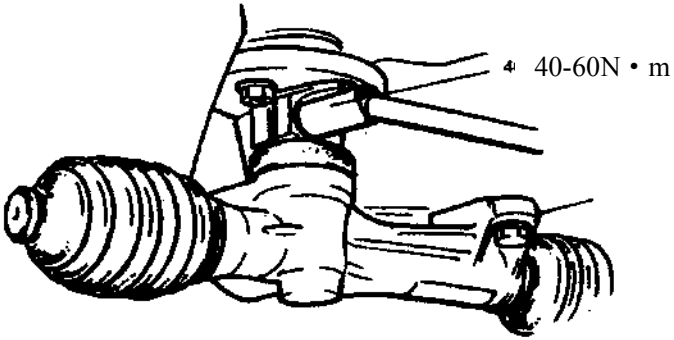

Fig. 3.6-10

https://truckmanualshub.com/

5) Connect the steering longitudinal pull rod to the steering boom and screw the groove type nut within specified torque range. Please refer to Fig.3.6-9.
6) Screw the gear shaft connector bolt to the specified torque. Please refer to Fig.3.6-10.
7) Install the upper wheels and screw the wheel nuts to the specified toque 50-80N • m.
8) Lay down the supported vehicle.
9) Examine the front wiring of wheels and replace them based on particular condition.
2. Steering cross pull rod
1) Install the locking nut of the steering cross pull rod end and steering cross rod ball pin base to the steering cross pull rod. Align the locking nut with the mark on the screw.
2) Connect the steering cross pull rod to the steering knuckle. Screw the groove type nut to the specified torque range. Please refer to Fig. 3.6-11.
3) Bend the cotter pin.
4) Examine the front wiring of wheels. Screw the locking nut of steering cross pull rod to the specified torque after determination of the front wiring of wheels.
5) Screw the wheel nut to the specified torque and lay down the lifted vehicle.
Note:
Ensure the axes of the steering small ball pin are in the same plain when screws the locking nut of the steering cross pull rod end. No torsion shall be allowed. Please refer to Fig.3.6-12.
3. Steering bearing frame assembly
1) Align the non splined part “A” on the steering gear shaft (upper) with the bolt hole “B” on the universal joint boom, and insert the steering gear shaft (upper) into the universal joint boom.

2) Install the steering gear shaft (lower) to the universal joint boom on the precondition of ensuring the straight driving of front wheels and steering wheel.

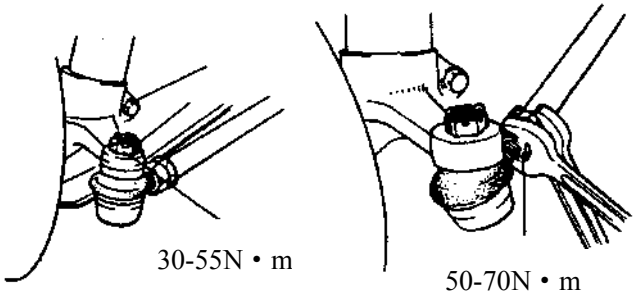

Fig.3.6-11

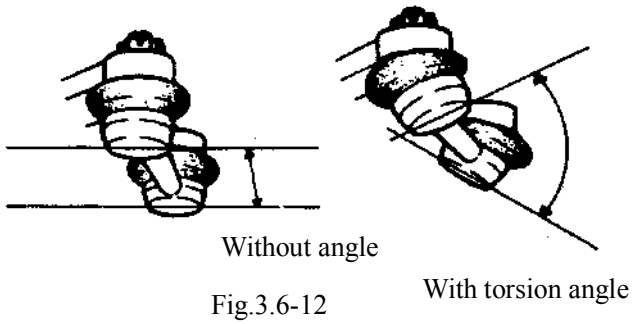

Fig.3.6-12

https://truckmanualshub.com/

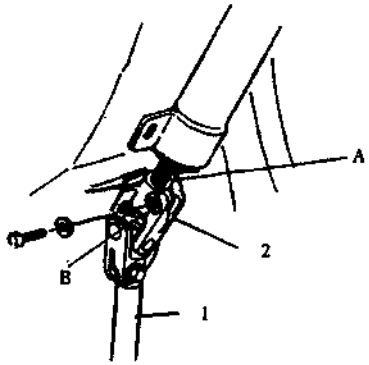

Fig.3.6-13

1.Steering gear shaft (lower)

2. Universal joint boom

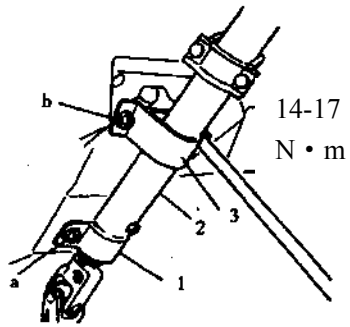

Fig.3.6-14

1. Steady rest (I) for steering gear shaft frame

2. Steering bearing frame assembly

(with gear shaft)

3) Fix the steering bearing frame, and screw the bolt to the specified torque. Please refer to Fig.3.6-14.

Note: The nut on the universal joint boom must be tightened after tightening the gear shaft frame fixing bolt.

4) Install the dust proof cover.

5) Install the unit switch.

6) Connect the leading wire form the unit switch and ignition switch on the universal joint. Connect the negative wiring on the battery.

7) Install the steering wheel. Screw the steering wheel nut to the specified torque 25-40N • m.

8) Install the steering wheel horn cover.

V Maintenance and service

1. Examine the steering bearing frame assembly to avoid accidental damage.

1) Examine the smoothness of the steering gear shaft rotation. If any poor condition occurs, replace the gear shaft.

2) Examine the steering bearing frame assembly and steering gear shaft to see whether there exists bending, cracking or deformation. If any poor condition occurs, replace it.

2. Steering gear shaft assembly

1) Examine whether there exists wearing or damage on the gear shaft tooth surface.

2) Examine whether there exists damage on the oil seal.

3) Examine the rotation performance of the bearing, and to see whether there exists wearing.

Replace the damaged components.

3. Steering pinion

Examine whether there exists flexure on the pinion, wearing or damage on the tooth surface and wearing or damage on the back of the tooth surface. If the deflection exceeds the specified value, replace the pinion. Steel wire brush shall not be used when cleans pinion.

Pinion flexibility limiting value	0.15mm

4. Steering gear housing lining

Examine whether there exists wearing or damage on the pinion lining. If any poor condition occurs, replace it.

5. Steering gear shaft plunger

Examine whether there exist wearing or damage on it and whether there exists deformation on the pressure springs. If any poor condition occurs, replace it.

6. Steering gear shaft and universal joint assembly

Examine whether exists cracks, breakage, deformation, failure or excessive clearance on the steering gear shaft and universal joint assembly. If any poor condition occurs, replace it.

https://truckmanualshub.com/

7. Steering gear dust proof cover

Note:

Each time to make regular maintenance and service or lift the vehicle due to certain reason, visually examine whether there exists damage or breakage on the dust proof cover.

1) Lift the vehicle.

2) Examine whether there exist breakage on the dust proof cover. Dust and water will enter through the cracks to cause the wearing of steering pinion and gear shaft if there exists breakage on the dust proof cover. Accompanied by noise and rust resulting in the failure of the steering system.

3) If any breakage is found on the dust proof cover, replace a new one.

8. Steering pull rod ball pin dust proof cover

Examine each dust proof cover to see whether there exists breakage on it. If any breakage is found on the dust proof cover, replace a new one.

9. Steering wheel

Park the vehicle on the ground, put the front wheels straight. Check free play and release on the condition.

Free play of steering wheel (A)	0-30mm

If the free play is not within the specified range, examine based on the following steps. If any poor condition occurs, replace it.

1) Steering cross pull rod ball pin wearing (apply the force of 0.2N • m, it can swing).

2) Steering gear shaft connector wearing.

3) Steering gear shaft or pinion wearing or damage.

4) Components assembly is not firm or connecting is not fixed.

VI. Front Alignment

Maintenance data of front alignment		
Toe-in	Bevel wheel	4-7mm
	Midnight wheel	2-5mm
Camber angle of front wheels		1°
Caster angle of king pin		5°
Toe in angle of king pin		$11^{o}30'$

The localization of front wheels is related with the angle relationship between front wheels, front suspension and ground. In general, adjustment needed for front wheels localization is only the toe-in. Camber angle of wheels and angle of king pin cannot be adjusted. Therefore, when a driving vehicle is damaged resulted from accident or collision, judge shall be done to determine whether it's body damage or suspension damage. If it is body damage, repair is needed, and if it is suspension damage, replacement is needed.

1. Settle the toe-in

Toe-in refers t o the distance difference value between the front and rear tire center of left and right tires on the position of wheel center height. The purpose of defining toe-in is to ensure the front wheel can move smoothly (excessive toe-in will result in abnormal wearing to the tires). Please refer to Fig.3.6-15.

2. Camber angle of wheels

Camber angle of wheels refers to the inclined degree which fronts wheels deviate from the straight line when viewing the front axle from the front wheels. If the front wheels top inclines outward, the camber angle of wheels is positive value. If the front wheels of top incline inward, the camber angle of wheels is negative value. Please refer to Fig.3.6-16.

3. Checks shall be done to adjust the front wheels localization

https://truckmanualshub.com/

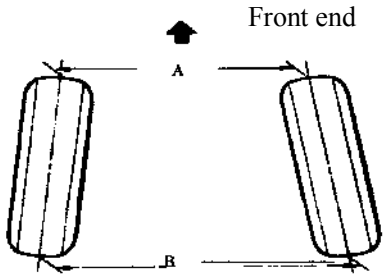

B - A= Toe-in

Fig.3.6-15

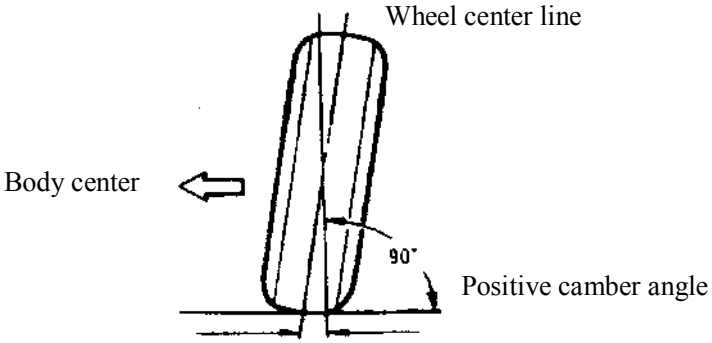

Camber angle of wheel

Fig.3.6-16

Checks shall be done before adjusting the front wheel localization to ensure the precision of the front wheel localization adjustment:

1) Check all the tires to see the suitableness of charged pressure and whether the wearing condition of the tire surfaces is the same.

2) Check whether there exists looseness for the steering system and suspension system. If there exists the condition of excessive looseness, modification must be done before adjustment.

3) Check the wheels and tires to see whether there exists swing and jumping.

4) The effect of the overload of toolbox etc. must be taken into consideration. If this kind of overload often occurs on the vehicle during driving, the overload must be reserved before examining wheel localization.

5) The state of apparatus used to examine the wheel localization must be taken into consideration, and operate according to the manufacturer's directions.

6) The lengthwise direction and longitudinal direction must be kept in the level position regardless of what kind of toe-in.

7) Examine the front wheels to ensure it keep in the straight driving position.

4. Adjust the toe-in

Toe-in can be adjusted by change the length of steering cross pull rod. Release the locking nuts of the steering cross pull rod ball pin on the two sides. Then equally rotate the left and right steering cross pull rod and adjust the toe-in to the specified value. The length of left and right cross pull rod must be the same after adjustment.

5. Adjust camber angle of wheels and caster angle of king pin

Once the condition that the camber angle of wheels or caster angle of king pin does not satisfy the specified value is found out during examination, the reason causes it must be firstly determined. If it is caused by damage, looseness, bending, hollow or wearing of the suspension components, the components must be replaced. If it is caused by the body itself, it must be repaired until satisfies the demand.

https://truckmanualshub.com/

6. Turing angle

Turning angle	Inner side	34°±3°
	Outer side	28°±3°

Check the toe-in and turning angle by applying special apparatus after replacing the steering cross pull rod, steering cross pull rod ball pin and master steering arm. The front wheels shall be ensured to be on the condition of straight driving before measuring the turning angle.
If the turning angle is not correct, check whether the two sides length of steering cross pull rod is the same.
Note:
If the length of steering cross pull rod is changed in order to adjust the turning angle, toe-in shall be reexamined.

G. Tightening Torque

Fasteners	Tightening torque (N • m)
* 1. Steering gear shaft joint bolt	20-30
* 2. Steering gear binding bolt	40-60
* 3. Steering cross pull rod ball groove type nut	30-55
* 4. Steering cross pull rod locking nut	50-70
5. Adjusting bolt	80-110
6. Steering boom locking clamp nut	50-70
* 7. Mid arm vertical shaft clamp nut	80-150
* 8. Steering gear shaft nut	25-40
* 9. Shaft connector clamp nut	15-25
* 10. Steering gear frame fixing bolt	14-17
* 11. Steering longitudinal pull rod groove type nut (boom side)	50-80
* 12 Steering longitudinal pull rod groove type nut (master steering arm side)	30-55

The items marked with * need to be regularly examined.

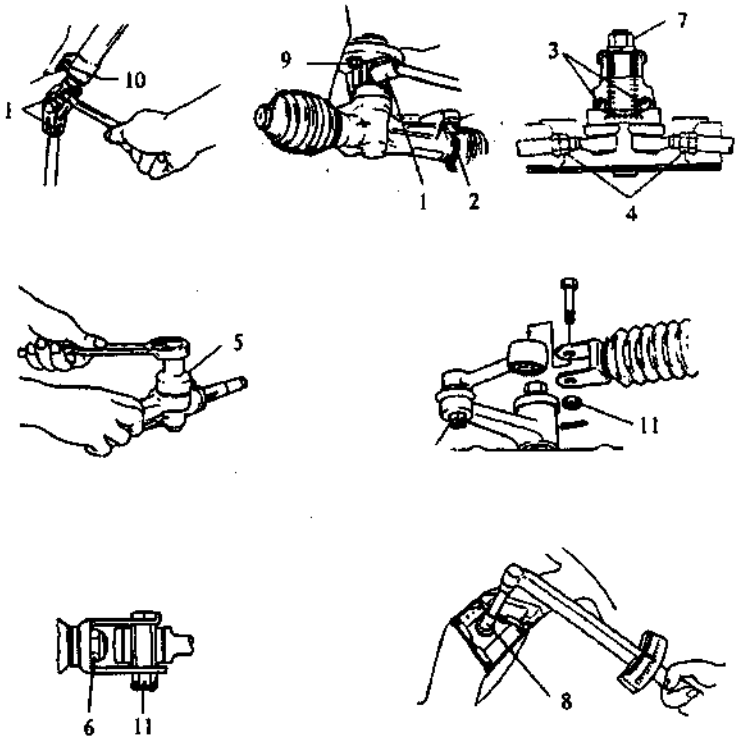

Fig.3.6-17

https://truckmanualshub.com/

Section 7 Brake System

I. Introduction

The vehicle applies dual pipe hydraulic brake system, front wheel disc brake, rear wheel drum brake (brake clearance is self adjustable). The brake has brake proportional valve. The operation system has vacuum booster. Parking brake applies to the rear wheels and transmits power through brake pulling wire. In addition, front wheel drum brakes and rear wheel drum brakes with manual adjusted brake clearance can be selected to install to the brake. Please refer to Fig.3.7-1 to see the brake type.

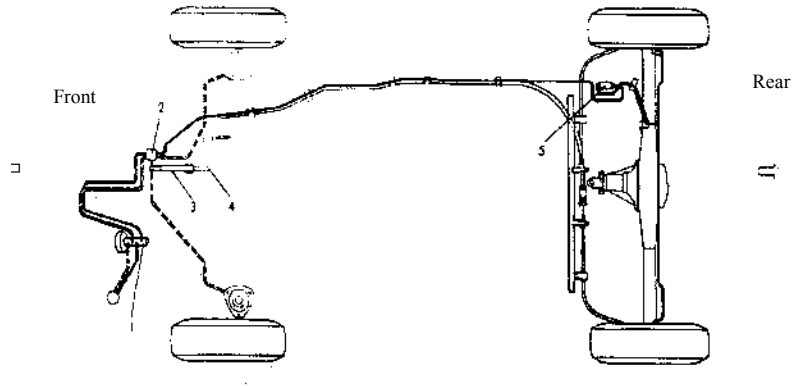

Fig.3.7-1

1. Brake master cylinder 2. Five bodies 3. Parking brake pull rod 4. Parking braking pulling wire 5. Proportional valve

https://truckmanualshub.com/

II. Front Wheel Disc Brake

(I) Disassembly

1. brake pad

1) Loosen the front wheel nut, then support the vehicle by using a lifting jack.

2) Support the vehicle on the safety board. Disassemble the hub nut, and take the front wheel down.

3) Screw (one) clamp bolt down.

4) Disassemble the clamp.

Note:

Do not damage the brake hose and do not press the brake pedal during disassembly.

5) Disassemble the brake pad.

2. clamp, piston, piston gasket

Disassemble the piston and piston gasket according to the following steps after disassembling the wheels.

1) Clean the clamp.

2) Screw the brake hose down from the cylinder block.

3) Screw (one) clamp bolt down.

4) Blow the compressed air into the oil cylinder through the bolt hole used to connect to the hose. Press piston out of oil cylinder by means of air pressure.

Note: Do not apply compressed air with too high pressure, otherwise the piston will rush out from the oil cylinder. Blow the piston out gradually by applying suitable compressed air. Do not put your fingers before the piston.

5) Disassemble the piston gasket, do not damage the oil cylinder wall.

3. As to the disassembly of the brake disc, please refer to Section Eight.

(II) Examine the components

1. Brake pad

Check whether there exist wearing on the liner of the brake pad. If the wearing exceeds the limit, replace the liner.

Note: Do not use sand paper to polish the liner as the hard particles on the sand paper will be attached on the liner and damage the brake disc. Visually examine whether the lamp leaks brake fluid when disassembles the liner. If leakage exists, it shall be repaired.

Pad height	Standard	Limit
Liner + pad edge	15.5mm	6.5mm

2. Oil cylinder guide column (clamp pin)

Check the smoothness of the guide column. If any problem occurs, it shall be repaired or replaced. Lithium base lubricating grease used on vehicle shall be suitably coated on the outside of the guide column. The viscosity of used lubricating grease shall not be greatly effected under the low temperature of -40℃.

3. Dust proof cover for liner and oil cylinder

Check whether there exists cracks or damages on each dust proof cover. If any problem occurs, replace the cover.

4. Piston gasket

Undue or unevenly wearing of the liner will result in the piston cannot mover smoothly. In this case, the piston gasket shall be replaced.

5. Brake disc

Check whether there exists marks of wearing or scuffing on the brake disc surface. If the scuffing is not very serious, it indicates that the brake disc is in good condition. If the scuffing is quite deep, the disc shall be replaced. Check whether the brake disc height has reached the limit.

Brake disc height	Standard	Limit
	10mm	8.0mm

As indicated in Fig.3.2-2, measure the two points on the circumference and center by using a dial gauge as rotating the brake disc edge, in this way the end jumping value the brake disc can be obtained.

End jumping limit value of brake disc	0.15mm

https://truckmanualshub.com/

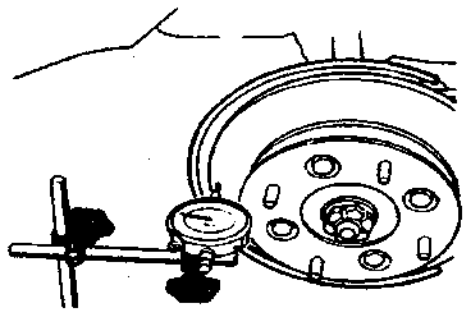

Fig.3.7-2

(III) Notes for assembly

Reassemble the front wheel brake according to the reverse order of disassembly, pay attention to the following notes:

- Each components shall be washed and cleaned by using the brake fluid of the same type number with the fluid in the oil cylinder before assembly/
- Do not use brake fluid with other type number or other fluid.
- Brake fluid shall be coated before assembling the piston and piston gasket into the oil cylinder.
- Discharge the air from the pipe after assembly.

1. Piston gasket

Piston gasket is used to seal the clearance between the piston and oil cylinder. New piston gasket shall be replaced during each maintenance. Do not torsion the piston gasket when inserting it into the oil cylinder groove.

2. Piston and dust proof cover

1) Install the dust proof cover to the piston before insert the piston into the oil cylinder.

2) Insert the piston with dust proof cover into the oil cylinder groove by using your fingers. (Please refer to Fig.3.7-3).

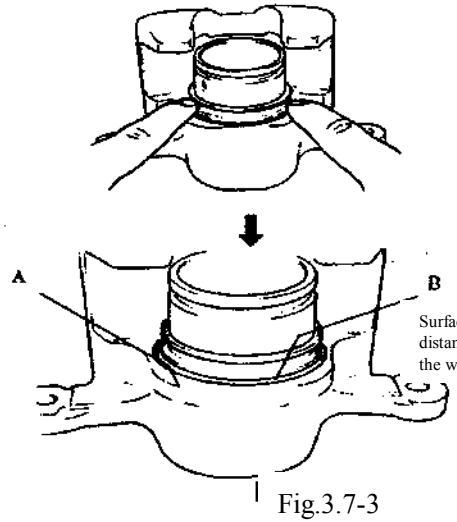

Fig.3.7-3

3) Install the piston into the oil cylinder by using your fingers, and install the dust proof cover into the dust proof cover groove of the piston.

4) Ensure the dust proof cover has been correctly inserted into the groove of the oil cylinder. Pull the piston slightly from the oil cylinder. Do not fully pull it out.

5) Finally, push the piston into the oil cylinder.

3. Clamp

The (two) clamp pins shall be checked to see whether lubricating grease has been coated on them and whether the clamp pin inserted into each clamp pin hole can move smoothly along the axle before installing the clamp (cylinder block) to the clamp bracket.

Note: Lithium base lubricating grease shall be used in the area where temperature is lower than -30℃ in winter.

https://truckmanualshub.com/

Tightening torque

Fasteners	N • m
1. Fastening brake disc and hub bolt	60-70
2. Fastening dust proof cover and steering knuckle bolt	18-25
3. Front brake hose connector bolt	20-30
4. Fastening brake tongs bolt	70-100
5. Clamp pin bolt (clamp side)	30-38
6. Clamp pin bolt (clamp bracket side)	50-60
7. Bleeding screw	9-13

4. Front brake hose

Connect the hose to the clamp, and screw the front brake hose connector bolt to the specified torque: 20-30N • m.

Note:

- Infuse the brake fluid in the brake oil cylinder and discharge the air in the system after assembly. Carry on the brake test and check whether there exists leakage of brake fluid on each assembly parts.
- Install each tire and examine whether the tire can move smoothly by applying the force which is less than 33N.
- Lift the front wheels by using lifting jack an make the front wheels away from the ground.
- Do not press the brake pedal when examines the tire rotation.

If the tire cannot rotate smoothly, check the following items:

- Whether the wheel bearing has been cracked
- When the brake disc rotates, whether the contact with liner is even.

III. Rear wheel drum disc (with clearance self adjusted mechanism)

(I) Disassembly

1. brake drum and brake shoe

1) Make the parking brake lever on the loose condition.

2) Loosen the wheel nut, do not take it down.

3) Support the vehicle by using a lifting jack and support it on the safety board, disassemble the wheel nut and take the wheels down.

4) Pack out the brake drum by using M8 bolt. (Please Fig.3.7-4)

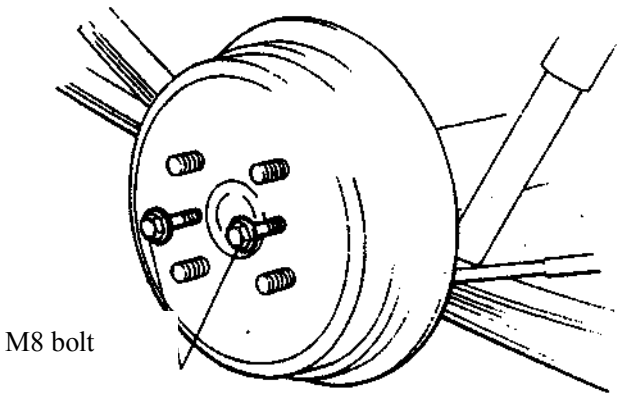

Fig.3.7-4

5) Rotate the brake shoe sizing spring pin, disassemble the brake shoe sizing spring.

6) Take the parking brake cross bracing wire down from the parking brake draw arm, and disassemble the brake shoe.

2. Brake wheel cylinder

1) The steps to disassemble the brake drum and brake shoe is the same as above mentioned.

2) Screw the pipe connector down from the brake wheel cylinder.

3) Screw the brake wheel cylinder-assembling bolt. Cover the discharging screw of the brake wheel cylinder on the oil pipe to avoid splashing and flowing of the brake fluid.

(II) Examine the components

1. Brake drum

https://truckmanualshub.com/

Check whether the brake drum is clean, measure the inner diameter of the brake drum and examine the wearing of the brake surface.

Item	Standard	Operation limit
Inner diameter of brake drum	220mm	222mm

Once the brake drum is disassembled, it shall be completely cleaned and be examined to see whether there exists any cracks, scuffing or deep groove on it. Replace the brake drum with cracks, and do not try to weld the brake drum with cracks. Serious scuffing on the surface will result in undue wearing to the brake liner, therefore the brake surface of brake drum must be recovered. If there exists slight wearing on the friction liner and groove on the brake drum, fine sand paper shall be used to polish the brake drum. Do not carry cutting recovery.

Note: Visually examine whether the lamp leaks brake fluid when disassembles the liner. If leakage exists, it shall be repaired.

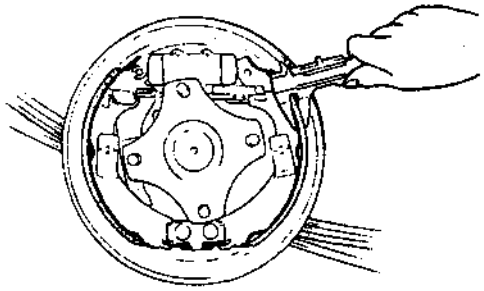

Fig.3.7-5

2. Brake shoe

If wearing of the friction liner exceeds the operation limit, the brake shoe shall be replaced. (Please refer to Fig.3.7-5).

Brake friction liner	Standard	Operation Limit
Height (liner + shoe edge)	7.0mm	3.0mm

If one of the brake friction liners exceeds the operation limit, a pair of friction liner in the same brake shall be simultaneously replaced.

3. Brake wheel cylinder

When disassembles the brake drum, check whether there exists leakage on the wheel cylinder. If leakage occurs, the sealing part in the wheel cylinder shall be replaced.

Check whether there exists damage or wearing on each component of the wheel cylinder. If any problem occurs, replace the component.

4. Brake clearance self adjusting mechanism

Check whether there exists wearing or damage on each component of brake clearance self adjusting mechanism. If any problem occurs, replace the component.

5. Various Springs

Check whether the springs has been damaged or the elasticity has been reduced. If any problem occurs, replace the spring.

(II) Notes for assembly

1. Brake wheel cylinder

1) Tighten the brake wheel cylinder to the brake bottom board by applying the specified tightening torque.

2) Screw the pipe connector of brake hose to the specified tightening torque.

3) Take the protective cap of the discharging screw down from the pipe and install it to the discharging screw.

2. Brake shoe

1) Water proof sealant shall be coated on the contact point between brake bottom board and parking brake cross bracing wire, thread the parking brake cross bracing wire through bottom board and tighten it by caliper.

https://truckmanualshub.com/

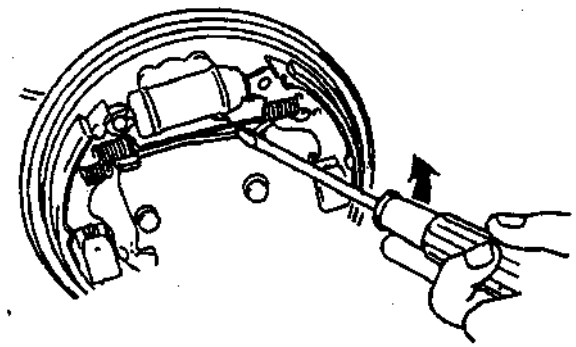

Fig.3.7-6

2) Assemble each component according to the reverse order of disassembly.

Note: Do not damage dust proof cover of brake wheel cylinder when installs brake shoe.

3) Press the brake shoe sizing spring down to the installation position and rotate the sizing spring to complete installation.

4) Before assembling brake drum, insert a screwdriver in the self adjusting mechanism in order to get the maximum clearance between brake drum and brake shoe. Press down the toothed quadrant as indicated in Fig.3.7-6.

5) Install the brake drum after ensuring no dirt or oil pollution on the brake drum and brake shoe.

6) Screw the wheel nut to the specified torque.

7) After completing all the tasks, press the brake pedal five times by applying the force of 300N to obtain suitable clearance between brake drum and brake shoe.

8) Check whether brake drum can rotate smoothly without obstruction and has the normal brake effect. Then lay the supported vehicle down and carry on brake test.

Note:

Air shall be discharged out of the brake system if disassembles the brake hose.

V. Front and rear drum brake with manual adjusted brake clearance

(I) The steps for disassembly and assembly and the examination items of components are the same with rear drum brake with self adjusting clearance mechanism.

III) Front brake structure is as indicated in Fig.3.7-7, rear brake structure is as indicated in Fig.3.7-8.

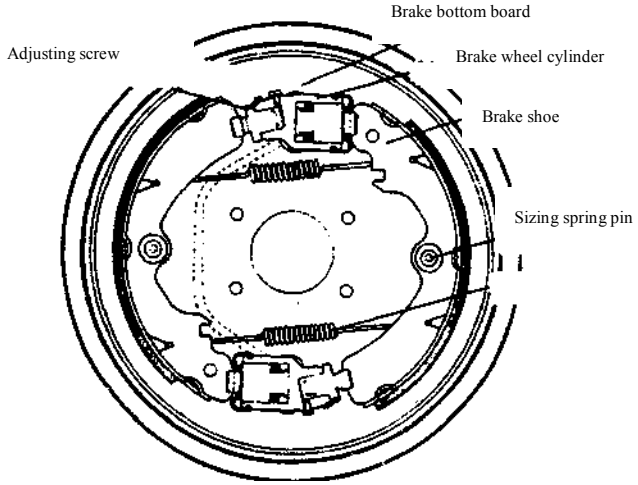

Fig.3.7-7

https://truckmanualshub.com/

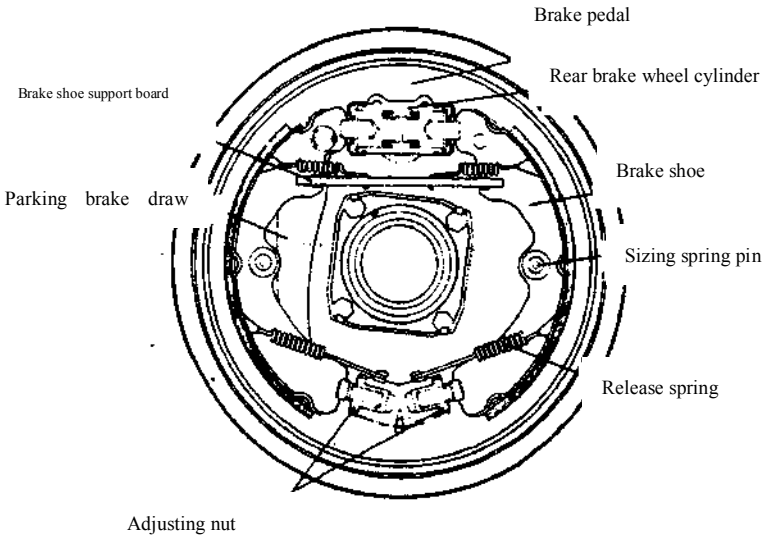

Fig.3.7-8

Clearance adjustment: Insert the screwdriver into the adjusting hole of the brake drum, rotate the adjusting screw until the clearance between the brake shoe and brake drum becomes zero and then rotate the adjusting screw 3 to 6 teeth in the reverse direction. (Please refer to Fig.3.7-9).

Note: Ensure the excellent brake performance of the entire car through adjusting the clearance between front brake and rear brake.

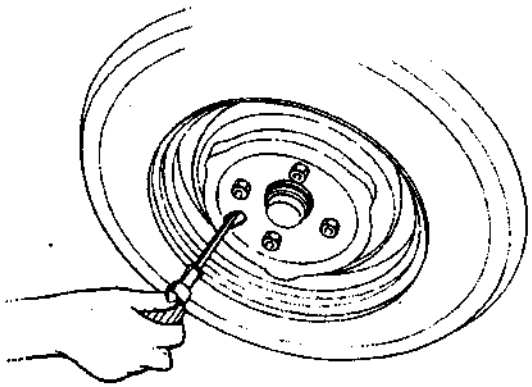

Fig.3.7-9

V. Brake Master Cylinder

(I) Disassembly

1) Disassemble the negative wiring from the battery.
2) Clean the outside of the brake oil cylinder.
3) Discharge the brake fluid.
4) Disassemble the steering shaft ball joint cover.
5) Disassemble the splicing parts between unit switch and wiring.
6) Disassemble the lower side bolt of the steering shaft ball joint.
7) Loosen the fixing bolt of steering column and disassemble the steering column assembly.
8) Disassemble the board “A” from the pedal bracket and instrument. Firstly screw the bolt ① and loosen screw ② in order to disassemble board “A”.
9) Disassemble the instrument decoration cover.

https://truckmanualshub.com/

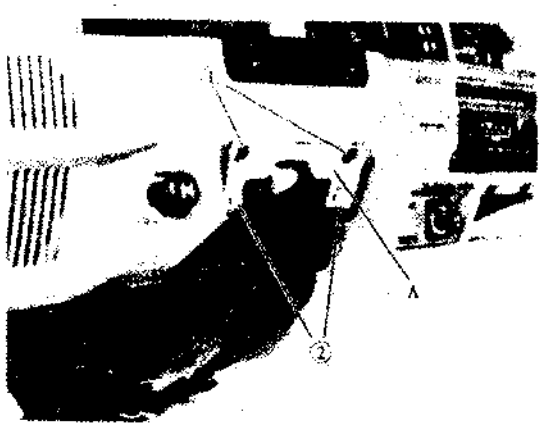

Fig.3.7-10

10) Disassemble the instrument assembly.
11) Disassemble the vacuum brake hose (I) from the vacuum pipe assembly (I) on the ground floor side.
12) Disassemble the two oil cylinder rubber pipes from the brake master cylinder.
13) Disassemble the two brake pipes from the brake master cylinder.
14) Disassemble the clutch pulling wire from the clutch pedal and the clutch pulling wire base.
15) Disassemble the connecting wire from the brake light switch.
16) Disassemble the fuse box assembly from the pedal support.
17) Check whether there exist other connectors on the pedal supports. If any one occurs, disassemble it.
18) As the vacuum booster and brake master cylinder are both installed on the pedal support, they shall be disassembled together with pedal support.
19) Disassemble the brake master cylinder from the vacuum booster.

(II) Disassembly

1) As is indicated in Fig.3.7-11, take the spring out, blow the first piston by using compressed air. Prevent the first piston from bouncing bout during disassembly.

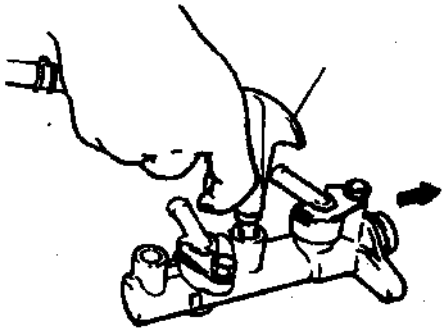

Fig.3.7-11

2) Screw the piston sizing screw down and then blow the second piston out by blowing in compressed air through sizing screw holes.

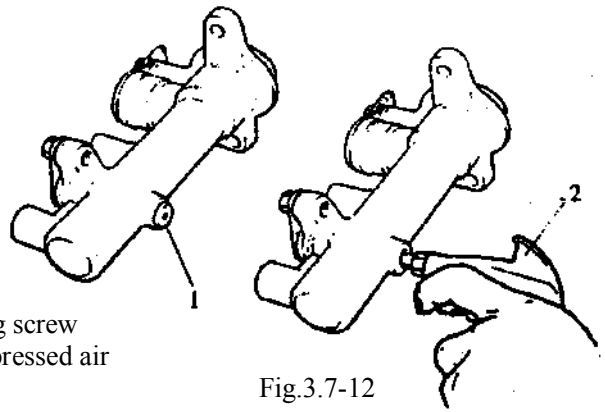

1. Sizing screw
2. Compressed air

Fig.3.7-12

https://truckmanualshub.com/

(III) Examine the components

1. Examine the internal components of brake master cylinder

Examine whether there exists wearing or corrosion on the disassembled components. Replace it based on particular need.

Check whether there exists scores or corrosion on the inner wall of the brake master cylinder oil tank. The corroded oil cylinder must be replaced. The corroded oil cylinder surface will have marking and roughness.

Clean brake fluid shall be used to clean the inner wall of the oil cylinder. Whip the oil cylinder to force out of all the used brake fluid. Do not use wiping cloth to wipe the oil cylinder. The wool on the wiping cloth will be left on the inner wall of the oil cylinder.

Note:

- Brake fluid shall be used to clean each component.
- Do not use old piston cup or gasket.
- Do not use any abrasive agent to polish the inner wall of oil cylinder to avoid to damage to the inner wall of oil cylinder.

2. Brake oil tank

Fill the brake fluid up to the maximum (MAX) position.

Note:

Do not use the liquid containing shock absorber fluid and other mineral oils. Do not use the container which has been filled with mineral oil or is moistened with water. This is due to that mineral oil can expand and deform the rubber part in the brake system, while the mixed water will reduce the brake performance of brake fluid.

(IV) Assembly

Note: Brake fluid used on the vehicle shall be used to clean each component before assembly.

1) Install the second piston assembly.

2) Install the second piston assembly to the oil cylinder.

3) Install the first piston to the oil cylinder.

4) Push the first piston slightly inward, install the sizing screw and screw it to the specified torque 1.5-3N • m.

5) Install the induction manifold connector by using directional pressure plate “A” and “B” in the angle which is indicated in Fig.3.7-13, and screw it to the specified torque.

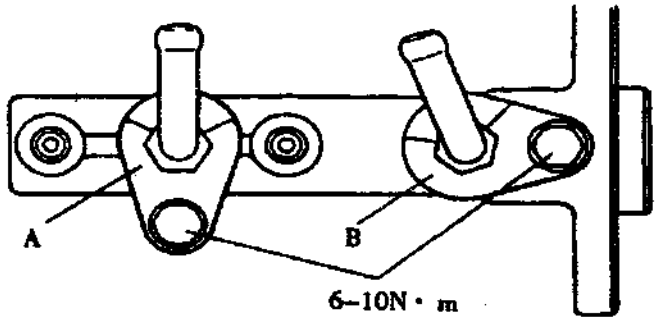

Fig. 7.7-13

(V) Note for assembly

Assemble according to the reverse order of disassembly, and note the following points:

1) Install the brake master cylinder to the vacuum booster, and screw the fixing nut to the specified toque. (Fig.3.7-14)

2) Install the vacuum booster and brake master cylinder to the pedal support, and install them to the body. Screw the fixing pedal support bolts.

3) Connect the clutch pulling wire to the pedal support and adjust the stroke of the clutch pedal.

4) Connect two brake hoses to the brake master cylinder, screw the brake hose connector to the specified torque (14-18N • m).

5) Connect the two brake hoses to the brake master cylinder and fix them tightly.

https://truckmanualshub.com/

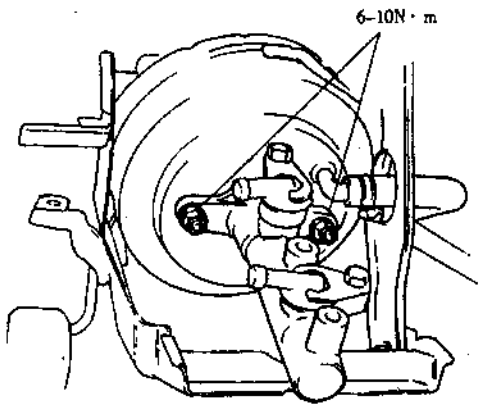

Fig. 3.7-14

6) Connect the vacuum brake hose (I) to the vacuum brake hose (II), and clamp them tightly.

7) Ensure that each component connected to the vacuum booster master cylinder assembly is tightly fixed.

8) The components which are taken down to disassemble the pedal support must be reassembled or reconnected.

9) Connect the electrical splicing connector and speedometer flexible shaft to the instrument assembly tightly. Then install the instrument assembly.

10) Assemble the steering column assembly according to the following sequence.

a. Set the wheels to the right front position.

b. When the steering wheel is on the state of right front, insert the ball joint into the lower axle.

c. Install the steering column to the body and screw the steering column bolt to the specified torque. Screw the steering shaft connector bolt to the specified torque.

11) Connect each wiring splicing part from leading wire of unit switch tightly and clamp the leading wire by using clips.

12) Ensure that all the components which are disassembled have been reassembled. If any problem occurs, replace it.

13) Fill a specified amount of brake fluid to the brake oil cylinder after assembling all the components.

14) Examine whether each light and action of switch is normal.

15) Examine the height and stroke of pedal, and whether there exists leakage of brake fluid.

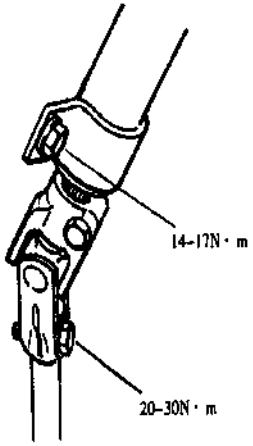

Fig. 3.7-15

https://truckmanualshub.com/

VI. Vacuum Booster

(I) Disassembly

1) Disassemble the vacuum booster from the body by applying the same method of disassembling brake master cylinder.

2) Disassemble the brake master cylinder from vacuum booster.

3) Disassemble the vacuum hose (I) from the vacuum booster. (Fig.3.7-16)

4) Disassemble the adjusting fork from the brake pedal arm. (Fig.3.7-17)

5) Disassemble the connecting nut, washer and vacuum booster.

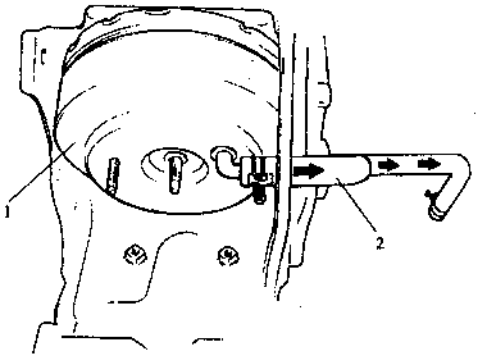

Fig.3.7-16

1. Vacuum booster housing 2. Vacuum hose

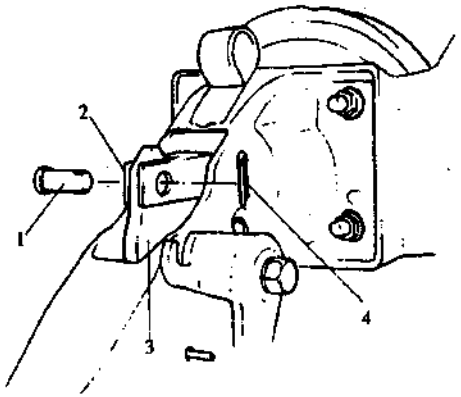

Fig.3.7-17

1. Plain pin 2. Adjusting fork 3. Brake pedal arm 4. Cotter pin

(II) Adjust the clearance between the master cylinder push rod and master cylinder piston

Adjust the length of the master cylinder push rod to make the clearance between push rod end and brake pump piston satisfy the specification. (Fig.3.7-18)

- Push the piston rod several times to ensure the reaction disc is in its position before measuring the clearance.
- The vacuum booster shall be kept under the barometric pressure during measurement.

(1) Install the special tool (I) and (II) to the brake master cylinder. Push (I) until the piston end surface A parallel oil cylinder surface A. (Fig.3.7-19)

(2) Reverse the tool and put them on the vacuum booster. Ensure the clearance between vacuum booster piston rod and the other end of special tool (I) is between 1.0-1.5mm. If the clearance is out of the range, adjust it to be within specified clearance range. (Fig.3.7-20)

https://truckmanualshub.com/

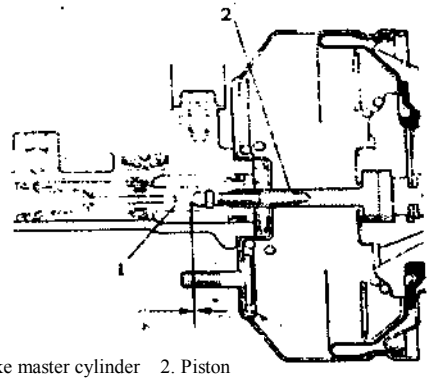

1. Brake master cylinder 2. Piston

Fig.3.7-18

Special tool I Special tool II

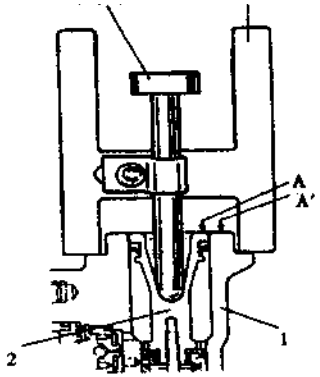

1. vacuum booster 2. master cylinder push rod

Fig.3.7-19

Special tool I

Special tool II

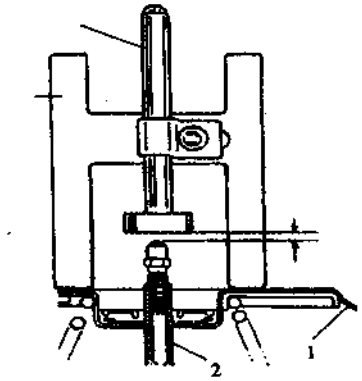

Clearance between special tool and piston rod is 1.0-1.5mm

1. Adjusting fork 2. Hexagon flange nut

Fig3.7-20

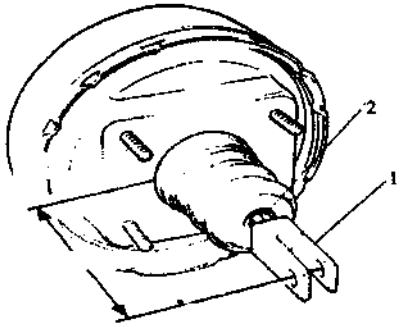

20-30N • m

106.5-107.5mm

1. adjusting fork 2. hexagon flange nut

Fig.3.7-21

https://truckmanualshub.com/

(III) Note for assembly

(1) As is indicated in Fig.3.7-21, check the distance between the fork pin hole and vacuum booster front end which shall be within 106.5-107.5mm. Screw the nut to the specified torque.

(2) Under the condition that the seal pad frame has been installed to the assistant chamber seal pad, install them to the rear housing. The installation direction is as indicated in Fig.3.7-22.

(3) Install the vacuum booster to the pedal support as indicated in Fig.3.7-23. And then install the vacuum booster adjusting fork to the brake pedal fork arm by using pin and cotter pin.

(4) Screw the vacuum booster to the specified torque.

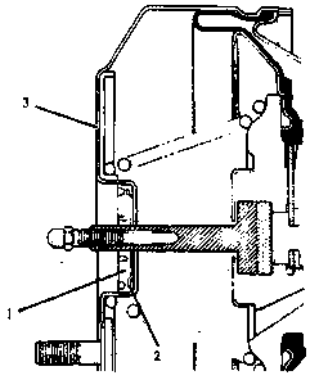

Fig.3.7-22

1. Assistant chamber seal pad 2. Seal pad framework
3. Rear housing

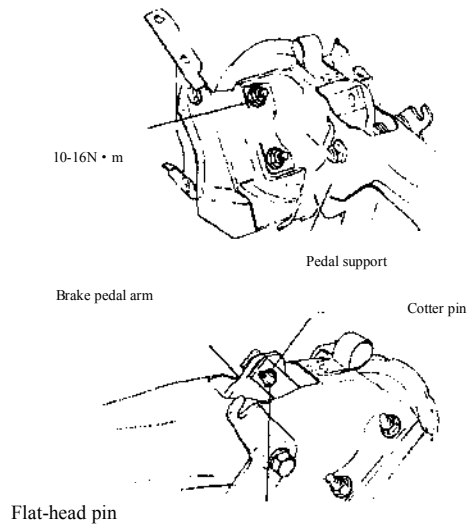

Fig.3.7-23

(5) Install the brake master cylinder to the vacuum booster as indicated in Fig.3.7-24, and screw the connecting nut to the specified torque.

(6) Connect the vacuum hose to the vacuum booster as is indicated in Fig.3.7-25.

The arrow in the hose shall direct to the intake manifold of the engine, and fix them tightly.

(7) Install the pedal support assembly and vacuum booster assembly to the body. Examine whether the oil rubber pipe connector is on the correct installation angle before assembly.

https://truckmanualshub.com/

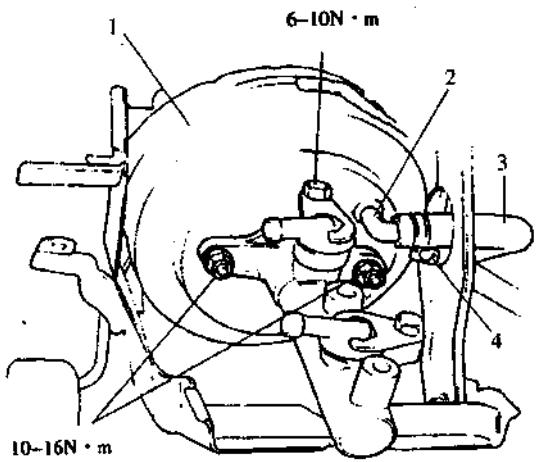

Fig.3.7-24

1. Vacuum booster 2. Vacuum pipe connector
3. Vacuum hose 4. Collar clamp

VII. Brake Pipe

(A) Disassemble and assembly

1) Clean the dirt and foreign particles on the joint of hose end and hard tube, and disassemble the brake hose and hard tube.

2) Assemble the brake hose and hard tube according to the reverse order of disassembly. The hose shall be ensured to have no torsion before assembling. The hose cannot touch any other components. Rotate the front wheel to the left or right until cannot rotate any more, if the hose touches any other components, it shall be modified. Fill the brake fluid in the brake oil cylinder and keep it on its normal liquid level, discharge the air in the brake system.

Tightening torque	N • m
Pipe connecting bolt	14-18
Brake hose connecting bolt	20-30

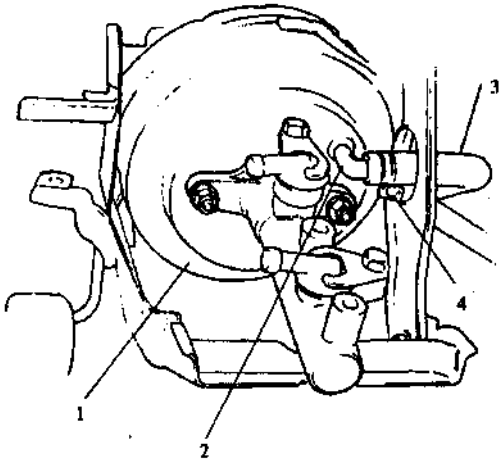

Fig.3.7-25

1. Vacuum booster 2. Vacuum pipe connector
3. Vacuum hose 4. Collar clamp

https://truckmanualshub.com/

VIII. Maintenance and service

1. Leakage of brake fluid

Examine the brake oil cylinder for liquid level. If the liquid level in the brake oil cylinder is slightly decreased, it shows that the decreasing is due to normal wearing of friction pad. If the liquid level is abnormally decreased, it indicates that leakage of oil may exist in the brake system. In this case, examine the whole brake system to see whether there exists oil leakage. Even if the oil leakage is very slight, the reasons that cause it shall be found out and the poor component shall be replaced.

2. Examine height of level of brake fluid

Brake fluid 9280 specified in this manual must be used. No other types of brake fluid shall be used.

Height of level shall be between the minimum (MIN) line and the maximum (MAX) line.

Warning light may flash during driving, it indicates that brake fluid shall be infused in to the oil cylinder until reaches the MAX line position.

If brake fluid is rapidly decreased, oil leakage of the brake system shall be examined. Repair the part which causes leakage, and refill brake fluid to the specified liquid level.

3. Fill brake fluid in the brake oil cylinder

Do not use the liquid containing shock absorber fluid and other mineral oils. Do not use the container which has been filled with mineral oil or is moistened with water. This is due to that mineral oil can expand and deform the rubber part in the brake system, while the mixed water will reduce the boiling point.

Fill the brake fluid 9208 in the brake oil cylinder to the maximum (MAX) level position.

4. Adjust the free height of brake pedal

It is normal for brake pedal height is the same with clutch pedal height.

1) When installs vacuum booster adjusting fork, the distance between booster installation surface and push rod pin hole must be adjusted to the range of 106.5-107.5mm.

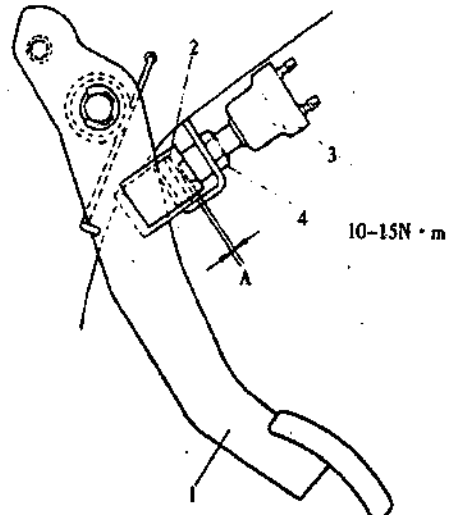

Fig.3.7-26

1. Brake pedal 2. Contact board 3. Parking lamp switch 4. Locking nut

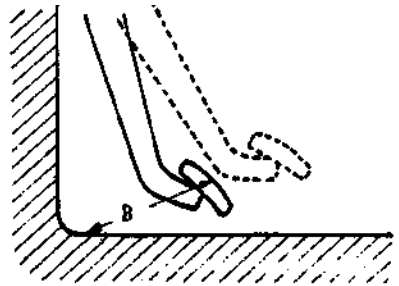

Fig.3.7-27

https://truckmanualshub.com/

2) When the stop lamp switch is disassembled, please correctly assemble it according to the specifications in "Adjust the stop lamp switch".

5. Adjust the stop lamp switch

When installs switch, firstly pull the brake pedal upward. Adjust the switch position to make the clearance between screw end and stopper pad of brake pedal within the range of 0.5-1.0mm. Screw the locking nut to the specified torque.

6. Examine excessive pedal stroke

1) Stop the engine.

2) Press the brake pedal for several times.

3) Press the brake pedal by applying the force of about 30kg, measure the clearance between brake pedal arm and floor. The clearance is no less than 95mm. (Fig.3.7-27).

4) If the clearance is less than 95mm, the most possible reason is that rear brake shoe wearing exceeds operation limit or air is left in the pipe. In the case that the brake shoe has been replaced or air in the system has been discharged, the clearance "B" is still less than 95mm, it shows that failures may occur in the rear brake adjusting mechanism or improper length adjusting of booster push rod as to vehicles with booster.

7. Examine brake hose and pipe

1) Hose

Examine whether there exists danger of damage and leakage during driving, whether there exists breaks or scuffing and bubble on the outside. If any one occurs, replace it.

2) Pipe

Examine whether there exists damage, cracks, hollow or corrosion on the brake oil pipe. If any one occurs, replace it.

8. Examine friction pad

The friction pad shall be regularly examined based on maintenance schedule, and it shall be examined when the wheels is taken down (due to tire interchanging or other reasons).

9. Examine brake disc

The brake disc shall be regularly examined based on maintenance schedule.

10. Examine the brake shoe and friction pad

The brake shoe and friction pad shall be regularly examined based on maintenance schedule.

11. Examine the brake drum

The brake drum shall be regularly examined based on maintenance schedule.

12. Examine and adjust the parking brake

1) Examine the parking brake

Hold the central part of the parking brake handle, pull the handle upward gradually by applying the force of 20kg until the brake works at full strokes. When pulling upward, listen to the "clatter" produced by the ratchet wheel. One "clatter" is produced when pulling one tooth upward. If the "clatter" is more than 8, the manual brake pulling wire shall be adjusted. Examine whether there exists wearing or damage on the tooth crest of each tooth, replace it based on particular need.

2) Adjust the parking brake

① Examine the parking brake handle to see whether it satisfies the specifications in the following table.

② If it does not conform to the specifications in the table, manual brake pulling wire shall be adjusted.

Parking brake handle stroke

Pull the handle by applying the force 20kg	Within 3-8 teeth range

The following conditions shall be satisfied before adjusting the pulling wire:

a) The rear brake shoe does not exceed operational limit, and its self adjusting mechanism can work normally.

b) No air is mixed in the brake system.

c) Brake pedal stroke is normal.

d) The brake pedal has been pressed several times by the force of about 30kg.

https://truckmanualshub.com/

e) Parking brake handle has been pulled several times by the force of 20kg.

③ The brake drum shall not have "dragging" condition after loosening the adjusting nut to adjust the stroke as is indicated in

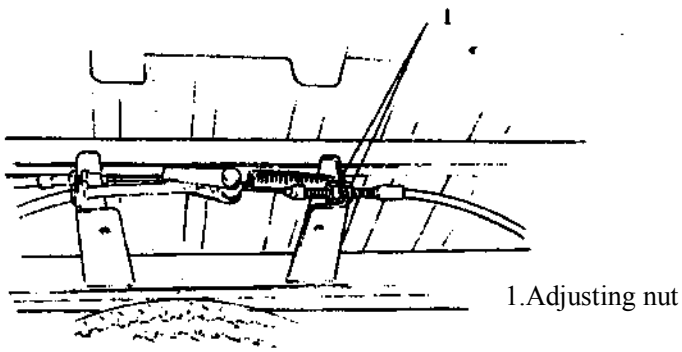

Fig.3.7-28.

3) Examine the parking brake pulling wire

Examine the damage on the brake pulling wire and protective pipe, and whether they can slide smoothly. If any problem occurs, replace the pulling wire.

13. Examine the free stroke of brake pedal

The free stroke of brake pedal shall be within the range specified in Fig.3.7-29. If the stroke deviates the specified range, examine whether the installation position of the stop lamp switch is correct and adjust it based on particular need. Examine whether there exists looseness on the brake pedal bolt and pintle which is used to connect the vacuum booster adjusting fork and brake pedal arm. If any problem occurs, replace it.

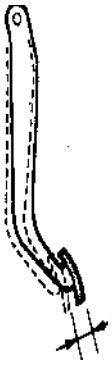

Fig.3.7-29

14. Adjust the bra

Same as the abov

15. Wash brake hydraulic system

Each time when a new component is installed in the hydraulic system, it is suggest to use clean brake fluid to wash the whole hydraulic system completely.

It is recommended that the user shall regularly replace brake fluid for every two year.

16. Exhaust of brake system

Air must be exhausted when air enters in the hydraulic system.

① If the brake hose of the front wheel brake pipe or hoses are separated, air in the left and right front wheel brake system must be exhausted.

② If the rear wheel brake pipe or brake pipe or hose on brake wheel cylinder are separated, air in the left and rear brake wheel cylinder must be exhausted.

③ However, if there is air in the brake master cylinder, brake oil cylinder, hose, five body and the hydraulic system, air shall be exhausted through the parts of "A", "B" and "C" as is indicated in Fig.3.7-30 from the hydraulic system. The exhaust shall start from the brake wheel cylinder which is the farthest from the brake master cylinder. The steps are as follows,

https://truckmanualshub.com/

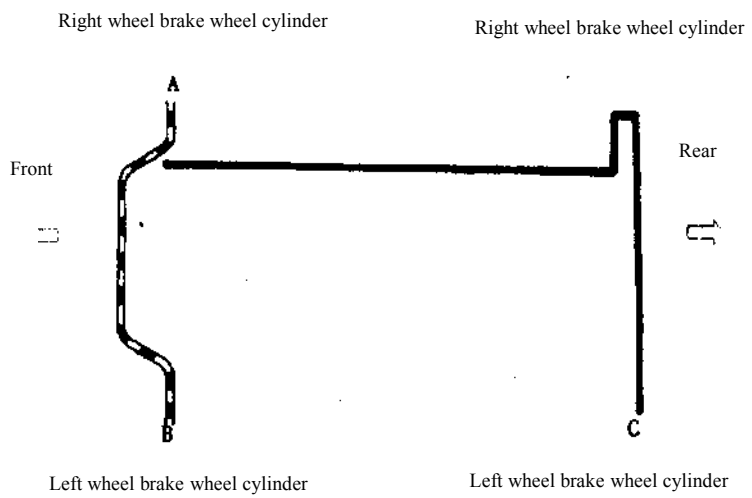

Fig.3.7-30

a) During the exhaust operation, the brake fluid shall be filled in and the oil cylinder shall be kept in the condition of half full.

b) Disassemble the exhaust screw protective cap. Connect the ethylene rubber pipe to the exhaust screw of brake wheel cylinder and insert the other end in the container.

c) Press the brake pedal for several times, and keep it in the condition of being pressed as loosening the exhaust screw fro about 1/3 or 1/2 ring.

d) When the hydraulic pressure in the brake oil cylinder nearly exhausted, press the brake pedal and rescrew the exhaust screw.

e) Repeat the previous steps until there is no bubble in the exhausted brake fluid.

f) When the bubble stops appearing, press the brake pedal and tighten the exhaust screw.

g) Install the exhaust screw protective cap.

h) Insert hydraulic pressure on the pipe after completing exhaust, and examine whether there exists oil leakage.

i) Fill the brake fluid in the brake oil cylinder until it reaches the specified liquid level.

j) Examine whether the pedal is “soft”. If it occurs, repeat the whole exhaust process.

17. Examine vacuum booster action

Two methods can be used to examine vacuum booster action: with test watch and without test watch. Usually, operation state can be roughly determined by using the method of without test watch. The following is about the inspection method without test watch. No air shall be left in the hydraulic pipe when carries on the examination.

① Examine air tightness

a) Start the engine.

b) Turn off the ignition switch after running 1-2 minutes.

c) Press the brake pedal several times by applying same force with normal brake, observe the pedal stroke. If the first press can make it to the bottom, and the pedal stroke for the second time and third time gradually decreases, it shows that air tightness is normal.

d) If there is no difference for pedal strokes, it shows that air tightness is abnormal. Examine the air tightness o vacuum pipe and replace the poor components. Then repeat the previous test.

② Examine the action state

a) When the engine is stopped, press the brake pedal several times by applying the same force and ensure there is no change for the pedal.

https://truckmanualshub.com/

b) Start the engine as pressing the pedal. If the pedal stroke is slightly increased, it shows its function is normal. While if the pedal stroke do not change, it shows its function is abnormal.

③ Examine air tightness with load

a) Press the brake pedal when the engine is running. And turn off the ignition switch when the pedal is still being pressed.

b) Press the pedal and keep 30 seconds. If the pedal height does not change, it shows the state is normal. Otherwise, it is abnormal.

Section 8 Wheel And Tire

I. Replace the tire

When it is necessary to replace a tire, an original equipped type shall be used. It must be the same size, load range and structure with the tires used on original car. If tires of other sizes or types are used, it will effect the important factors like riding comfort, operational reliability, match of speedometer and the minimum clearance from ground etc.

Note:

Unless emergency, meridian tires and bevel tires cannot be simultaneously used on one car. If combines different types of tire in one car, it will seriously reduce the operational reliability of vehicle and may make the vehicle out of control.

Tires shall be paired off to be used in a same vehicle axel. If only one tire need to be replaced, a nearest tire to the wheel track shall be used to keep the adhesive force to the ground in balance during brakes.

II. Replace the wheel

If a wheel has the conditions of torsion, hollow, excessive horizontal or radial swinging tolerance, discharging air from the welding joint, bolt hole being pulled longer, enlightened wheel nut and serious corrosion, it shall be replaced.

If the deflation of wheels exceeds the limit value indicated in Fig.3.8-1, it will produce harmful vibration. The replacing tire shall have same load capacity, diameter, wheel band width, and eccentricity and installation structure with the original wheel. IF the size or type does not conform to the original size or type, it may influence on the important performance indicators like, life span of vehicle and bearing, brake and cooling effect, matching of speedometer and the minimum clearance from ground etc.

https://truckmanualshub.com/

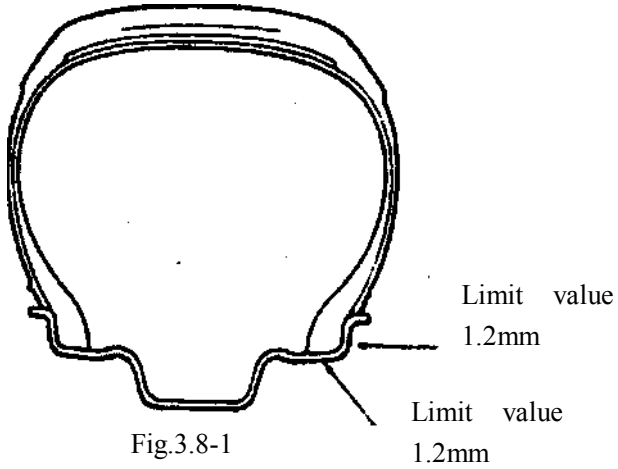

Fig.3.8-1

III. Charge the tire

Charging pressure for each model has been seriously and carefully calculated to get better riding comfort, operational reliability and to facilitate steering, best reduce the wearing to tire and prolong the durability of tire. Check the charging pressure when the tire is on cool state (set the vehicle for over 3 hours or drive no more than 1kilometer). Charge the tire to the specified pressure value.

Meridian tire:	Front wheel	200kpa
	Rear wheel, spare wheel	230kpa
Bevel tire:	Front wheel	210kpa
	Rear wheel, spare wheel	260kpa

Air pressure fro a common tire during driving will increase 30-50kPa, and the tire cannot be discharged or the tire pressure cannot be reduced.

The following conditions will occur if the tire pressure is higher than the specified air pressure:

1. Bumping driving
2. The tire is damaged or the tire foundation is broken
3. Rapid wearing to the tire central wheel track

The following conditions will occur if the tire pressure is lower than the specified air pressure:

1. The tires make noise during steering
2. Heavy steering
3. Rapid and uneven wearing to the tire edge
4. Tire foundation is damaged or broken
5. Tire cord is broken
6. Tire temperature is too high
7. Operation failure
8. High oil consumption

The following conditions will occur if the tire pressures on the same vehicle axles are different:

1. Uneven brake
2. Steering occurs before operation
3. Operation failure
4. Deviation when speeding up

IV. Change the position of tires

The tires shall be regularly interchanged their positions to get even wearing. Please refer to Fig.3.8-2.

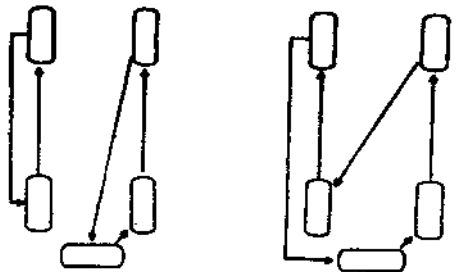

Meridian tire Bevel tire

Fig.3.8-2

https://truckmanualshub.com/

V. Disassemble the wheels
1. Loosen the nut for about half a round.
2. Support the vehicle.
3. Disassemble the wheels.
Note:
• Do not use heating method during disassembly of wheels. Otherwise, the life span of the wheels will be reduced and the wheel bearing will be damaged.
• Install the wheel nuts and screw them to the specified torque 60-80N • m in order.
• Clean corrosion on the wheel installation surface and brake drum or brake disc installation surface by using a steel wire brush before assembly of wheels.
VI. Assembly and disassemble of tires
A tire exchanger shall be used to disassemble the ties. Do according to the requirements during operation. Do not use manual tools or crowbar only to exchange the tires, as it will damage the tire edge and tire foundation.
Steel wire brush or rough gauge wire cotton shall be used to clean the lubricating oil, old rubber and slightly rust part on the wheel foundation edge. The specified lubricating grease shall be coated on the part of wheel foundation before disassembly to achieve better lubrication.
After assembly of tires, charge to the specified air pressure and check whether the binding edges have been completely matched.
Note:
• Do not charge excessive pressure to the tires.
• If the binding edges cannot match under the specified air pressure, discharge the air pressure, then relubricate and recharge it. Excessive charging will make the binding edges broken and cause serious damage to the people.
VII. Balance The Wheels
There are two types used for balance of wheels and tires: dynamic balance and static balance.
Static unbalance will cause uneven wearing to the tire.
Dynamic unbalance will cause the front wheels to vibrate.
Note:
• Completely clean the dirt deposited in the wheel foundation.
• Stones on the wheel track must be dealt away to prevent from causing damages to people during the balance test and achieve better balance effect as well.
VIII. Disassemble the wheel hub and bearing
1. Support the vehicle and disassemble the wheels.
2. Disassemble the dust proof cover. Do not deform the dust proof cover.
3. Disassemble the steering knuckle cotter pin.
4. Disassemble the steering knuckle groove nut.
5. Press the brake pedal and loosen the brake disc bolt.
6. Disassemble the brake caliper bolt.
7. Disassemble the brake caliper from the brake disc, and hang it by a steel wire hook.
Note: Do not press the brake pedal before installing brake caliper.
8. Pull the wheel hub out by using special tools.
9. Disassemble the elastic shield ring and hub bearing.
IX. Assemble The Hub Bearing And Shield Ring
Note:
• Once a hub bearing is disassembled, it cannot be used and must be replaced by a new one.
• Ensure the shield ring to tightly match in the ring groove of wheel hub.
1. Install the brake disc to the wheel hub. Slightly screw the brake disc bolt.
2. Install the wheel hub to the steering knuckle. Tap it slightly to avoid being installed slantwise as rotating hub. Having ensured the correct position of the hub, tap it in by using special tool.
3. Install pad and brake caliper.

https://truckmanualshub.com/

4. Screw the steering knuckle nut to the specified torque. Lock it by using cotter pin.
5. Screw the caliper nut to the specified torque.
6. Press the brake pedal and keep pressing, screw the brake pedal bolt to the specified torque. (Please refer to Fig.3.8-3.)
7. Install the dust proof cover.

Note: When assembles the dust proof cover, tap slightly on some parts of flange side by using a hammer until the flange surface matches with the wheel hub tightly. If the match surface of dust proof cover has been deformed or the match has been loosened, a new dust proof cover shall be replaced.

8. Screw the wheel nut to the specified torque, and lay down the vehicle.

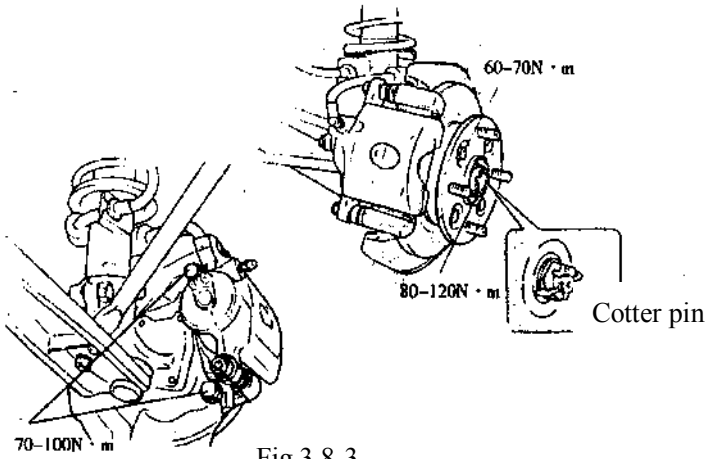

Fig.3.8-3

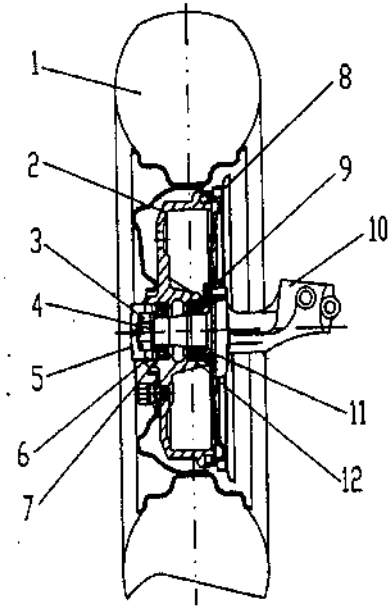

Fig.3.8-4

1. Wheel and tire assembly 2. Front hub 3. Hexagon slotting thin nut 4. Thrust washer 5. Dust proof washer 6. O rubber seal ring 7. T 3CC 025 8. Brake assembly 9. T 4CC 030 10. Steering knuckle 11. Oil seal seat 12. oil seal

https://truckmanualshub.com/

X. Assemble And Adjust The Front Hub Part Of Drum Brakes

1. Disassemble the wheel hub and bearing

(1) Support the vehicle and disassemble the vehicle.

(2) Disassemble the dust proof cover (do not deform the dust proof cover) and O rubber seal ring.

(3) Disassemble the steering knuckle cotter pin and groove nut.

(4) Disassemble the thrust washer and inner ring of outer bearing (T 3CC 025).

(5) Disassemble the front hub and inner ring of inner bearing (T 4CC 030) by using special tool.

2. Assemble the front hub assembly

Firstly install the inner ring of inner bearing (T 4CC 030) coated with lithium base lubricating grease No.2 into the outer bearing of front hub. At the same time, fill the inner chamber between two hub bearings with lithium base lubricating grease No.2 taking up 60% volume of the inner chamber. The oil seal with operating surface coated with lithium base lubricating grease No.2 is installed into the hub and then is installed to the steering knuckle together with the hub. Finally fill the inner ring of outer bearing (T 3C 025) with lithium base lubricating grease No.2, install it to the steering knuckle and lock it by hexagon slotting thin nut.

3. Adjust the front hub bearing (refer to Fig.3.8-4)

Tighten the hexagon slotting thin nut by applying the tightening torque of 30-60N •m, meanwhile rotate the hub along the positive and negative positions to eliminate the bearing clearance. Back the nut for 1/6-1/3 ring, make the nut gap right faces the steering knuckle pin hole and tighten it by using cotter pin. The hub shall be able to rotate freely and have no obvious sway.

4. Operation And Maintenance

(1) As to the second class maintenance (6000-8000km), disassemble the front hub, clean the hub inner chamber and hub bearing, fill in new lubricating grease and reassemble it. Finally, adjust the hub bearing according to specifications.

(2) As to the third class maintenance (35000-45000km), disassemble, clean and check the front axle, and reassemble and readjust it. Examine the hub oil seal, if there exists damage or degradation on cutting edge, it shall be replaced.

5. Types for bearing and oil seal

Bearing

Fig. No.	Designation	Number
T 3CC 025	Conical roller bearing (ISO355 series code)	2
T 4CC 030	Conical roller bearing (ISO355 series code)	2

Oil seal

Fig. No.	Designation	Number
3103025-V70	Oil seal	2

https://truckmanualshub.com/

Chapter IV Vehicle body

Section 1 Front door and rear sliding door

The main assembly parts included in front door refer to Fig. 4.1-1

I. Front door glass and front door glass regulator

(I) Disassembly

Disassemble front door glass and front door glass regulator according to the following sequence:

1) Front door inner handle box.

2) Front door inner pull handle.

3) Glass regulator handle. The method is to foist a piece of cloth into circlip, tear down, to disassemble glass regulator handle. See Fig. 4.1-2.

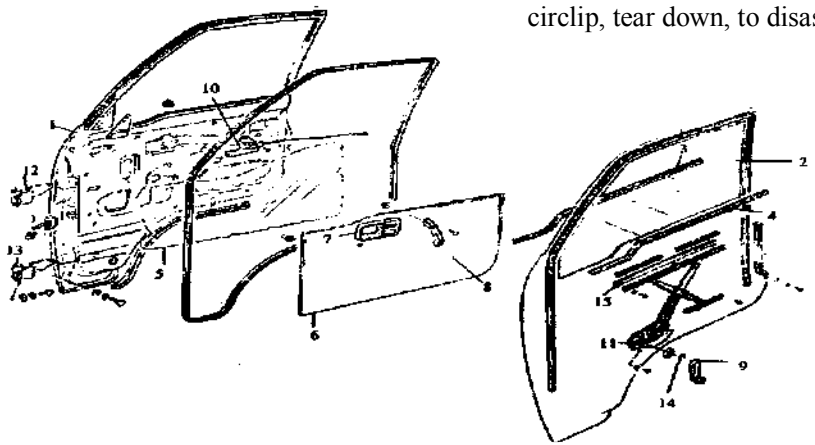

Fig. 4.1-1

1. Front door 2. Front door glass 3. Front door outer weather strip 4. Font door inner weather strip 5. Front door seal membrane 6. Front door inner penal 7 front door inner handle box 8. Front door inner handhold 9. Glass regulator rocking handle 10. Front door inner handle 11. Front door glass regulator 12. Front door upper hinge 13. Front door lower hinge 14. Rocking handle circlip 15. Front door glass bearer

https://truckmanualshub.com/

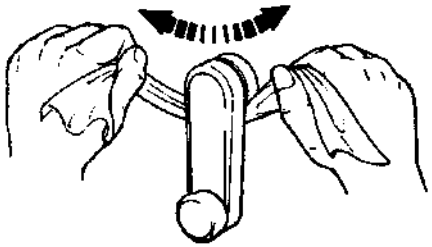

Fig. 4.1-2

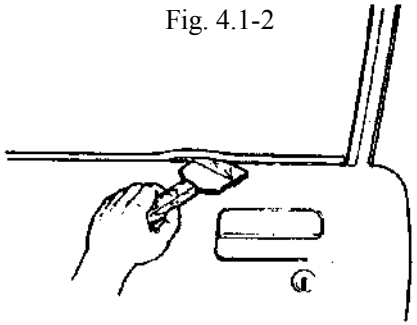

Fig. 4.1-3

4) Front door inner panel .

5) Front door seal membrane.

6) Front door inner weather strip. The method is to wind down front door glass completely, then use a screwdriver wrapped with tape to pry inner and outer weather strips open, see Fig. 4.1-3.

7) Fixing screw for front door glass bearer, see Fig. 4.1-4.

8) Pull up the rear side of front door glass, take out front door glass with front door glass bearer, and see fig. 4.1-5.

9) Dismount glass from glass bearer.

10) Fixing screw (6 positions) for front door glass regulator. Unscrew the 6 screws, take out the regulator from opening A, and refer to Fig. 4.1-6.

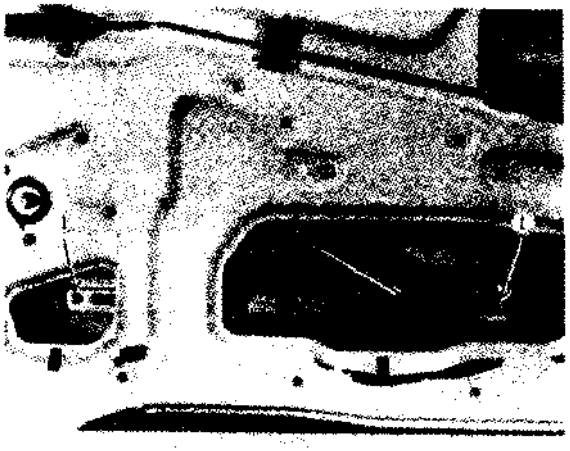

Fig. 4.1-4

1. Screws

https://truckmanualshub.com/

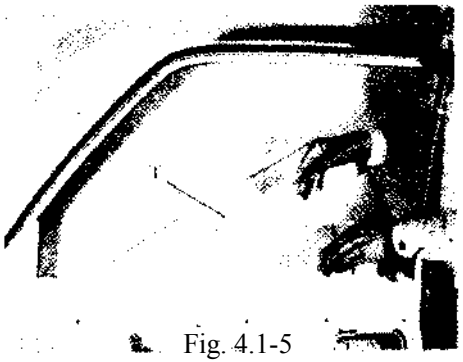

Fig. 4.1-5

1. Front door glass

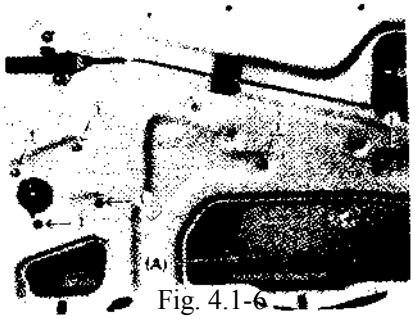

Fig. 4.1-6

1. Fixing screws for front door glass regulator

(II) Inspection

1. Check whether front door glass regulator gear is abraded or damaged.
2. Check whether front door glass regulator spring is loose.

(III) Assemble front door glass and front door glass regulator in a reverse sequence.

Pay attention to the following when installing:

1) Daub multi-purpose grease on all sliding and turning parts of front door glass regulator, see the positions indicated by arrowheads in Fig. 4.1-7.

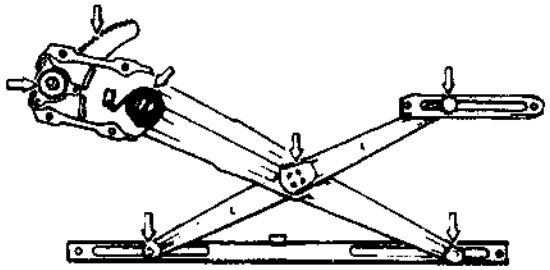

Fig. 4.1-7

Daubing grease on the positions indicated by arrowheads

https://truckmanualshub.com/

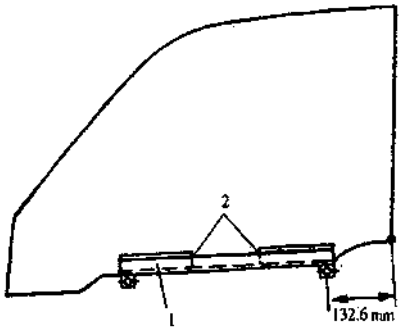

Fig. 4.1-8
1. Glass bearer 2. Glass bearer rubber gibs

2) When assembling glass on glass bearer rubber gibs, daub soap water on glass bearer rubber gibs, and use rubber hammer to rivet slightly glass. The position of glass fixed on glass bearer sees Fig. 4.1-8.

3) If it is difficult to wind up and down front door glass, the reason may be that the glass leans to door case. If so, it is necessary to adjust the fixed slide rail of glass regulator, t make size A equal to size B, see fig. 4.1-9, Fig. 4.1-10.

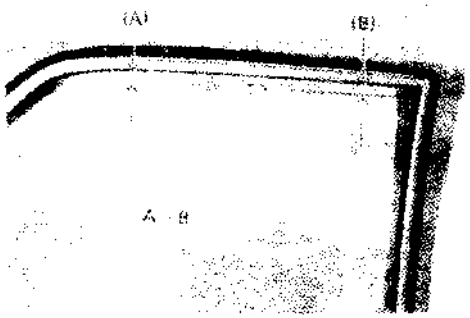

Fig. 4.1-9

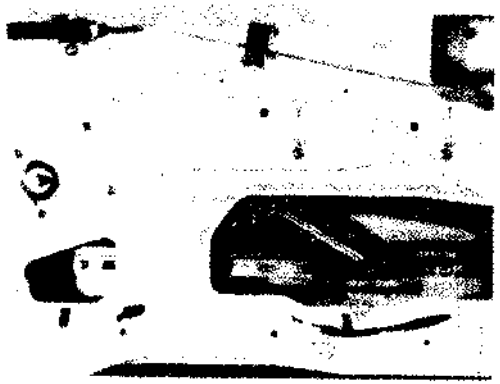

Fig. 4.1-10 Adjusting fixed slide rail
1. Fixing screw for fixed slide rail

https://truckmanualshub.com/

4) Use adhesive agent to adhibit front door seal membrane on door inner panel tightly, see Fig. 4.1-11.

5) Assemble glass regulator handle, to make an angle of 45° with vertical plane when the glass is closed fully, as shown in Fig. 4.1-12.

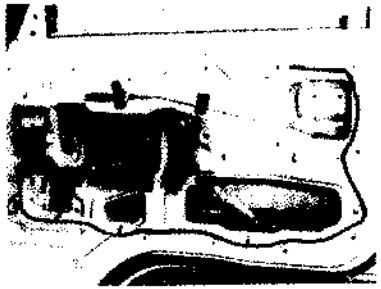

Fig. 4.1-11

1. Front door seal membrane 2. Adhesive agent

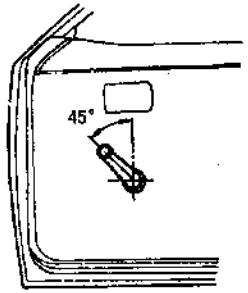

Fig. 4.1-12

II. Door lock

(I) Front door lock

The main parts included in front door lock see Fig. 4.1-13.

(II) Rear side slide door lock

The main parts included in rear side slide door lock see Fig. 4.1-14.

(III) Disassembly

1. Front door lock

Disassemble front door lock in the following disassembling sequence:

1) Front door inner handle box.
2) Front door inner handle.
3) Front door glass regulator rocking handle.
4) Front door trim board.
5) Front door seal membrane.
6) Fixing frame for front door glass guide rail.
7) Front door inner handle and lock body assembly.

After disconnect the dragbar sheaths of each connection dragbar, disassemble inner handle and front door lock assembly.

2. Rear side slide door lock

Disassemble rear side slide door lock in the following disassembling sequence:

1) Slide door inner handle assembly.
2) Slide door trim board.
3) Slide door waterproof seal membrane.
4) Slide door lock connection rod mechanism assembly and lock body assembly. After disconnect the dragbar sheaths of each connection dragbar, disassemble lock connection rod mechanism assembly and lock body assembly, see Fig. 4.1-5.

https://truckmanualshub.com/

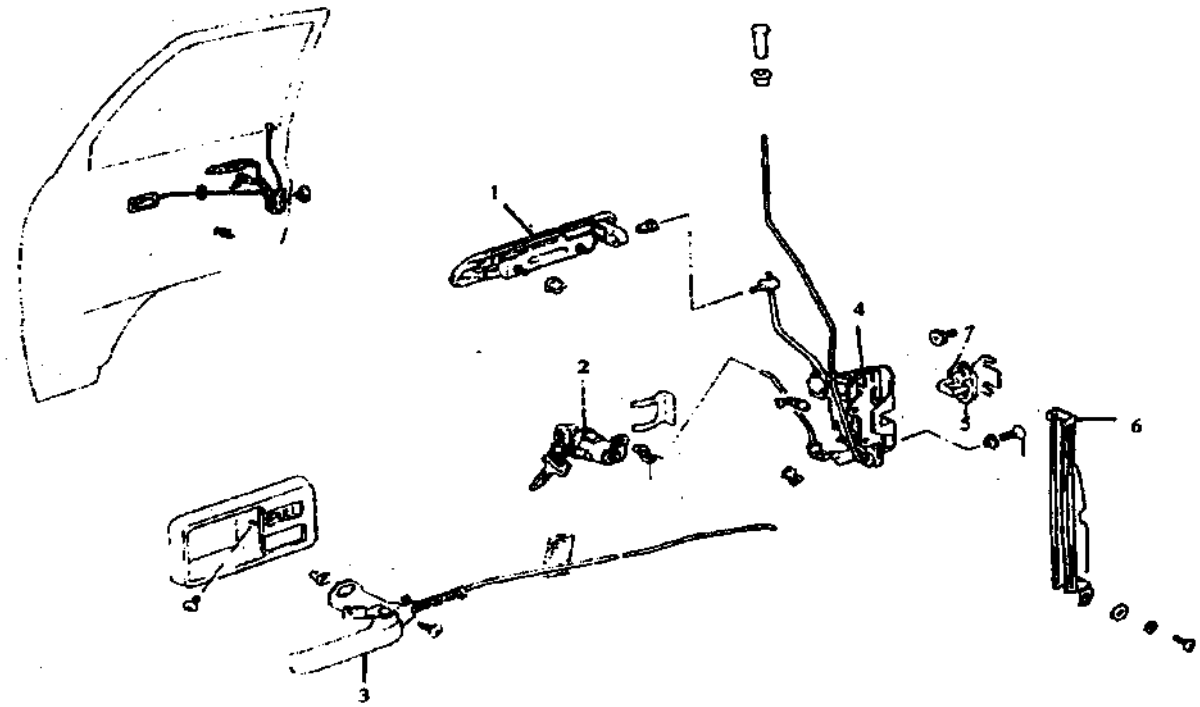

Fig. 4.1-13

1. Front door outer handle assembly 2. Front door lock cylinder assembly 3. Front door inner handle assembly
4. Front door lock body assembly 5. Front door lock ring assembly 6. Fixing frame for front door glass guide rail.

https://truckmanualshub.com/

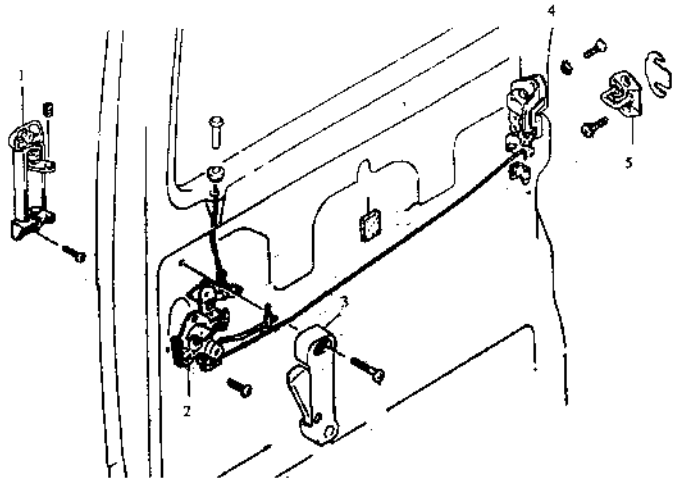

1. Outer handle assembly 2. Lock connection rod mechanism assembly 3. Inner handle assembly 4. Lock body assembly
5. Lock ring assembly

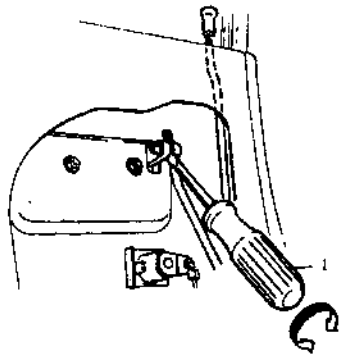

Fig. 4.1-15

1. Common screwdriver(disconnect door opening control slide rod)

https://truckmanualshub.com/

(IV) Installation

Install front door lock and rear side slide door lock in the reverse sequence of disassembling .Pay attention to the following when installing.

1. Outer handle dragrod

When installing outer handle drgrod 1 on door outside handle (outer handle), turn regulating nut 3 to make distance A reach 0-2mm as shown in Fig. 4.1-16, Fig. 4.1-17.

Note:

When installing and regulating outer handle dragrod, do not press downward (front door) or forward (rear door) to opening dragrod 6.

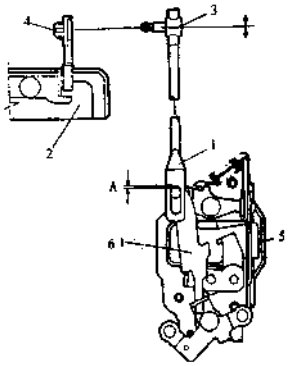

Fig. 4.1-16 Front door

1. Outer handle connecting rod 2. Front outer handle
3. Regulating nut 4. Front door outer handle connection sleeve
5. Front door lock body assembly 6. Opening dragrod A: 0-2mm

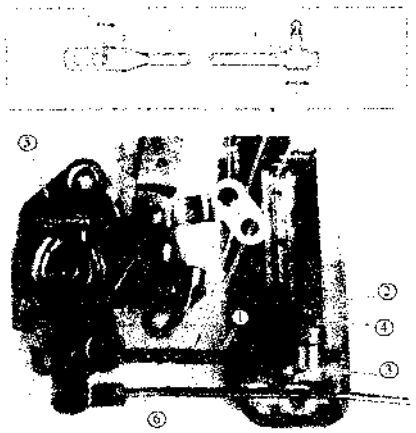

Fig. 4.1—17 Rear side slide door lock

1. Outer handle connecting rod 2. Rear side slide door outer handle
3. Regulating nut
4. Front door outer connecting sleeve
5. Lock connecting rod mechanism assembly
6. Opening dragrod A: 0-2mm

2. Front door inner handle

When fixing front door inner handle make it in place, move front inner handle dragrod an the direction indicated by arrowhead, to regulate the clearance between inside opening lever 1 and outer opening lever 3, to make it be 0-2mm, see Fig. 4.1-18.

https://truckmanualshub.com/

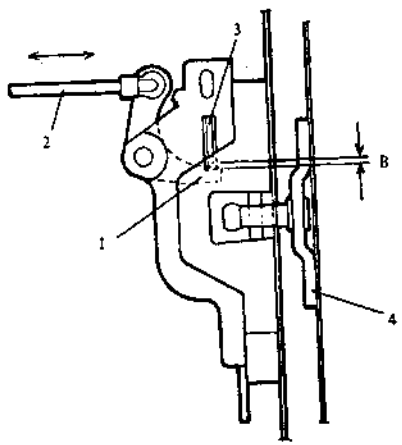

Fig. 4.1-18

1. Inside opening lever 2. Front door inner handle lever
3. Outside opening lever
4. Front door lock ring assembly B: 0-2mm

3. Door lock dragrod sheath

Use dragrod sheath 1 to fix firmly door lock dragrod according to the description in Fig. 4.1-19.

4. Rear side slide door inner handle

Install inner handle to make it in place according to Fig. 4.1-20. After handle 2 in full open state touch slightly to door lock toggling plate 3, screw bolt.

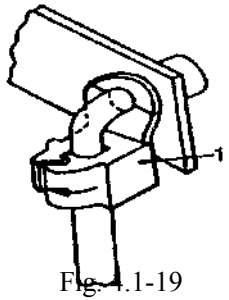

Fig. 4.1-19

1. Door lock dragrod sheath

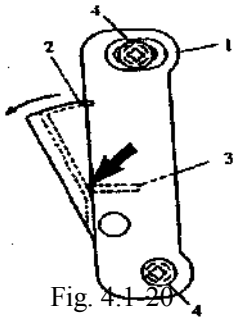

Fig. 4.1-20

1. Rear side door inner handle frame 2. Full opening inner handle
3. Door lock toggling plate 4. Bolt

https://truckmanualshub.com/

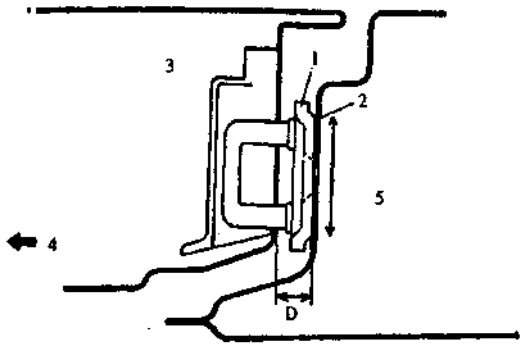

Fig. 4.1-21 Lock ring regulation

1. Lock ring assembly 2. Door lock regulating plate 3. Door 4. Front 5. Body (B-post) D: front door:12.7-14.7mm rear door:14.6-16.6mm

5. Lock ring regulation

In order to make lock ring position rightly in front and rear directions, add regulating plates between the vehicle body and lock ring, the lock ring position is realized through adding or reducing regulating plates. Front door D size must be regulated to 12.7-14.7mm, while rear D size to 14.6-16.6mm. See Fig. 4.1-21.

Regulate the upper and lower positions of lock ring, make its axis aim at lock body C approximately. See Fig. 4.1-22

Note:

Lock ring can be regulated upward and downward under the precondition of horizontal placement. Do not allow to regulate lock body.

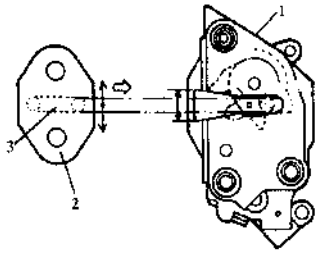

Fig. 4.1-22 Front door lock

1. Lock body assembly 2. Lock ring assembly 3. Lock ring

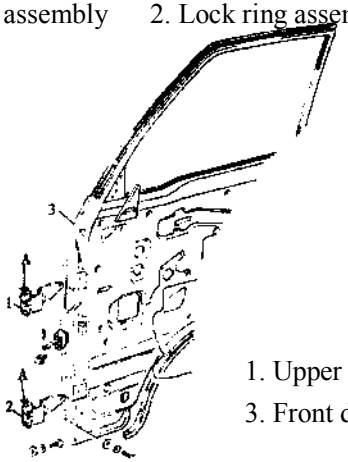

1. Upper hinge 2. Lower hinge

3. Front door A: filler ole

Fig. 4.1-23

https://truckmanualshub.com/

III. Front door

Front door joints vehicle body through the upper and lower hinges. In order to open the door easily, it is necessary to pour lubricating oil on the upper and lower hinge axes, see Fig. 4.1-23.

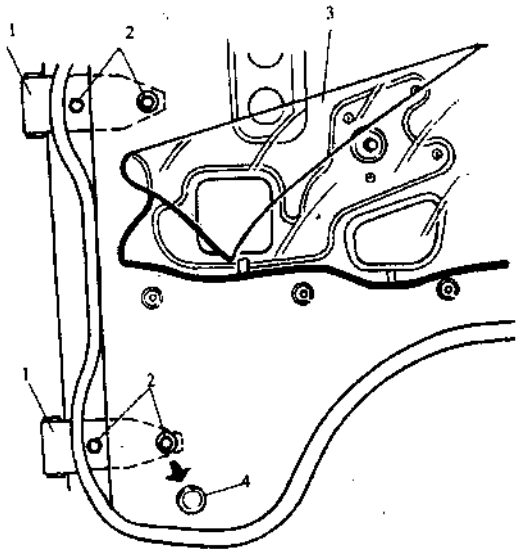

Fig. 4.1-24

1. Front door hinge 2. Bolt 3. Front door seal membrane 4. Front door hinge round plug

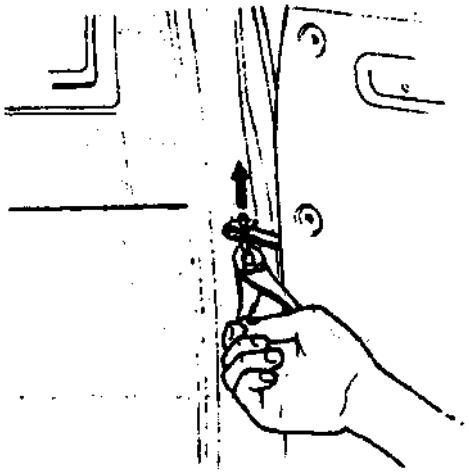

Fig. 4.1-25

(I) Disassembly

Disassemble front door in the following disassembling sequence:

1) Front door inner handle box. 2) Front door inner handhold. 3) Front door glass regulator rocking handle. 4) Front door trim board. 5) Strip the seal membrane from front door hinge bolt hole. 6) Dismount front door hinge round plug, see Fig. 4.1-24. 7) Dismount the latch of front door stop assembly through beating it with hammer, see Fig. 4.1-25. 8) Use jack, pillow a piece of wood block between the jack and door inner board to support the front door, see Fig. 4.1-26. 9) Dismount hinge bolt to dismount front door assembly.

https://truckmanualshub.com/

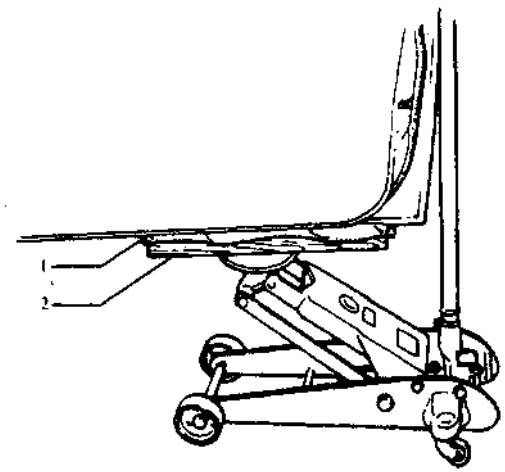

Fig. 4.1-26

1. Cloth 2. Wood block

(II) Installation

Install front door in the reverse sequence of disassembling. Pay attention the following when installing.

1) If weather strip has been aged, water leakage may occur. If possible, replace it.
2) After finishing installation, regulate front door lock ring position, to make front door in place rightly.

(III) Regulation of front door

1) Unscrew front door hinge bolt, regulate front door position along all directions, fasten bolts after regulation.

2) Regulating lock ring (refer the above description).

IV. Rear side slide door

Main assembling parts included in rear side slide door see Fig. 4.1-27.

(I) Disassembly

Disassemble rear side slide door in the following disassembling sequence:

1) Dismount slide rail rear end panel.

2) Dismount the bolt for fixing lower roller arm assembly, pull the slide door backward to make slide hinge separate guide rail, dismount rear side slide door, see Fig. 4.1-28.

(II) Installation

Install rear side slide door in the reverse sequence of disassembly. Pay attention to the following when installing:

1) If weather strip has been aged, water leakage may occur, if possible , replace it.
2) After finishing installation, regulate the door assembling state and lock ring position according to the following method.

(III) Regulation of rear side slide door assembling

1) Unscrew the screw of rear side slide door stop block.
2) Regulate lower roller arm 4, to make door front end surface 2 and vehicle body surface 3 aim at one line mutually in the state of door closing, see Fig. 4.1-29

https://truckmanualshub.com/

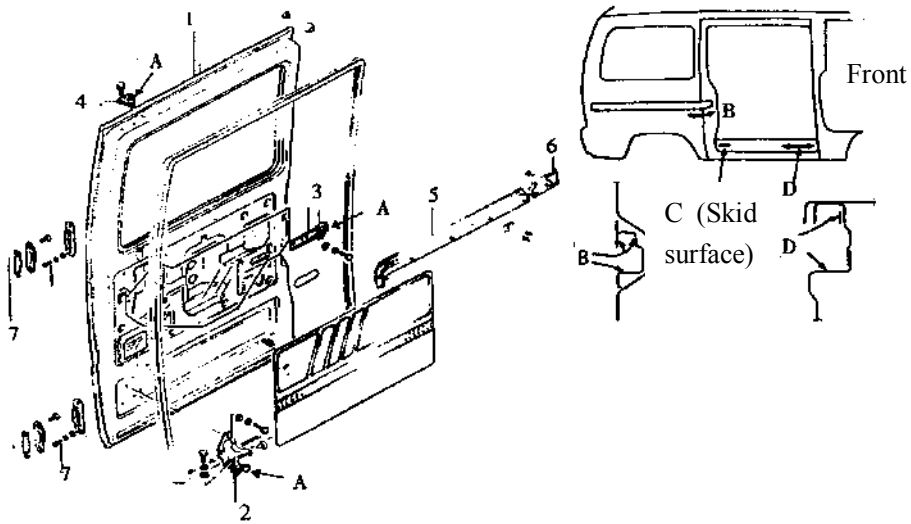

Fig. 4.1-27

1. Rear side slide door 2. Rear side slide lower roller arm
3. Rer slide door slide hinge
4. Rer side slide door upper roller arm 5. Rer side slide door slide rail
6. Rear end penal of rear slide door slide rail 7. Rer side slide door stop frame (block) A.B.C.D are all the positions for filling lubricating oil

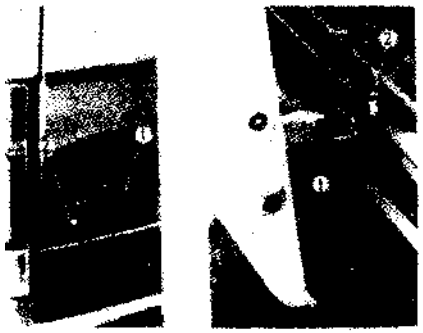

Fig. 4.1-28

1. Rerend of skate 2. Screw
1. Lower roller arm assembly 2. Bolt

https://truckmanualshub.com/

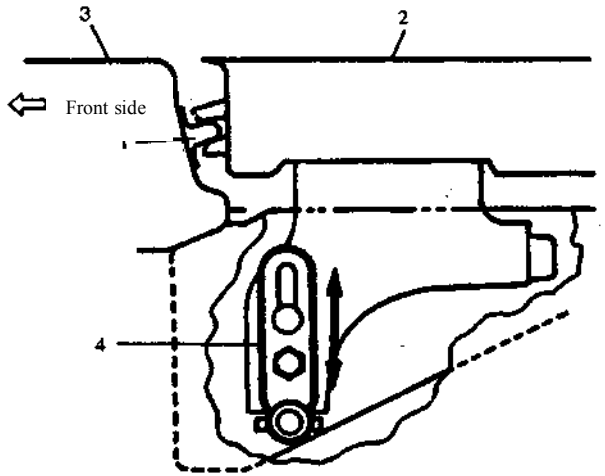

Fig. 4.1-29

1. Stop block 2. Door front end surface 3. Body surface
4. Lower roller arm

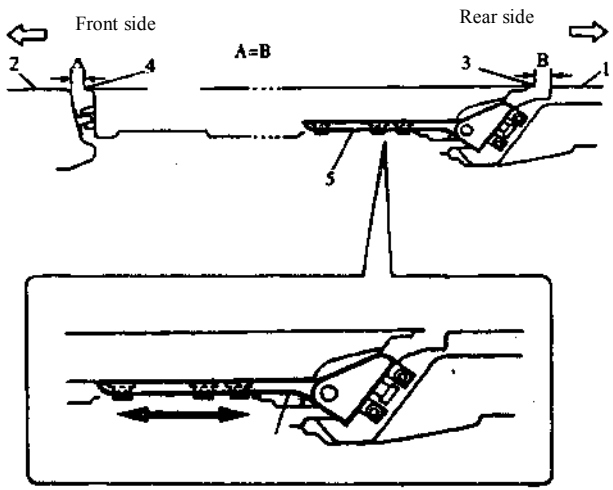

Fig. 4.1-30

1. Vehicle body(rear side) 2. Vehicle body (front side)
3. Door rer end 4. Door front end 5. Slide hinge

3) Dismount slide door inner handle, slide door inner trim board and slide hinge hole seal membrane. Regulate slide hinge 5 to make door rer end surface 3 and body surface 1 aim at one line mutually, at the same time regulate the clearance B between door rear end and body 1, the clearance between door front end 4 and body 2, to make them equal in the state of door closing. See Fig. 4.1-30.

https://truckmanualshub.com/

4) Regulate rer side slide stop block and screw the screw. See fig. 4.1-31.

5) Lock ring position regulation refers to the above description.

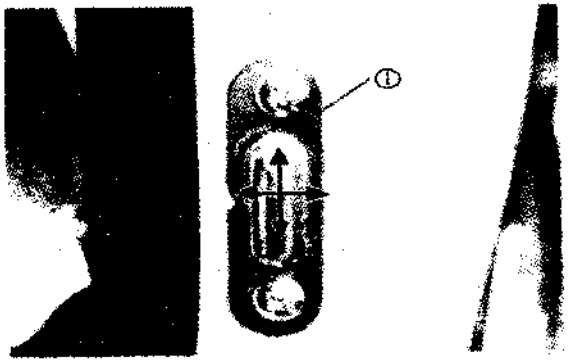

Fig. 4.1-31

1. Rear slide door stop block

Section 2 Rear door

Main assembling parts included in rear door see Fig. 4.2-1.

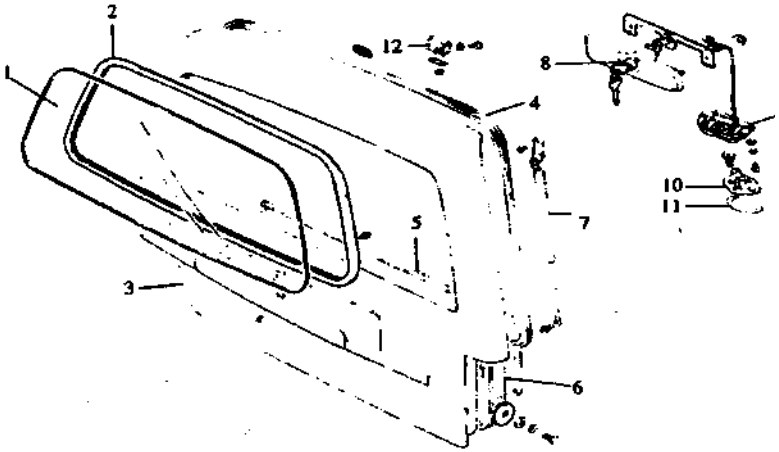

Fig. 4.2-1

1. Rear door glass 2. Rer door glass weather strip 3. Rear door assembly 4. Rear door weather strip 5. Rear door inside panel 6. Rear door seal membrane 7. Rear door support bar assembly 8. Rear door lock cylinder 9. Rear door lock body assembly 10 rar door lock ring assembly 11. Rear door lock ring regulating plate 12. Rear door hinge

https://truckmanualshub.com/

I. Rear door support bar

Note:

- Because support bar cylinder is full of gas, it shall not be disassembled.
- If dismounted rear door support bar is rejected, not use again, it is necessary to wrap it with an ethane plastic bag according to the description of Fig. 4.2-2. Then use a 2-3-mm borer to pass through the bag to bore out a hole on the support bar, as shown in the figure, to make the gas in the cylinder. Fig. 4.2-2

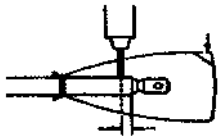

- Pay great attention to the packing, placement and transport of support bar, be careful not to make the exposed surface of piston connecting rod be scored.
- Do not turn piston connecting rod in the state that support bar extend fully.

II. Rear door lock

(I) Disassembly

Rear door lock may be disassembled in the following sequence:

1) Rear door inside penal.

2) Rear door seal membrane.

3) Rear door lock body and rear door lock cylinder.

After the fixing clamp of rear door lock dragrod is disconnected, lock body assembly and lock cylinder can be dismounted respectively.

(II) Installation

Install rear door lock in the reverse sequence of disassembling.

(III) Lock ring regulation

1) Regulate lock ring assembly to make lock ring axis aim at the center position of lock flute approximately, see Fig. 4.2-3.

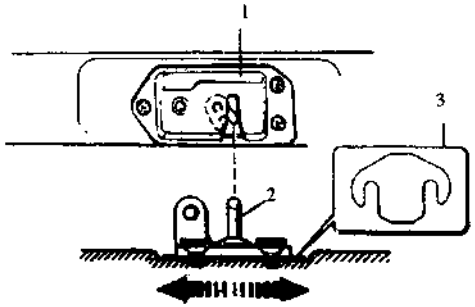

Fig. 4.2-3

1. Lock body assembly 2. Lock ring axis 3. Regulating plate

2) In order to regulate the up-and-down interrelation of lock body and lock ring within the door, some regulating plates can be added under lock ring assembly to regulate according to the method in Fig. 4.2-4.

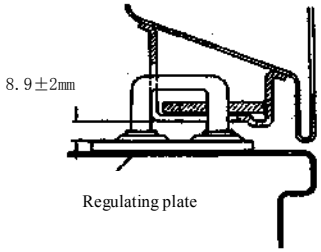

Fig. 4.2-4

https://truckmanualshub.com/

III. Disassembly

Rear door may be disassembled in the following sequence:

1) Rear door support bar assembly.

2) Rear door hinge.

IV. Installation

Install rer door in the reverse sequence of disassembly.

V. Rear door regulation

1) Unscrew rear door hinge bolt, regulate rear door along front, rear, left and right.

2) Regulate rear door up-and-down position through adding the number of rer door hinge pad.

3) Unscrew the bolt of rear door buffer gasket, regulate the gasket in up-and-down direction to the proper position, then fasten the bolt.

4) Refer to the above-mentioned method for lock ring regulation to regulate lock ring position.

Section 3 Seat

CA6350 serial passenger car has 3 rows of seat, for 6, 7 or 8 persons riding. Seat color can be changed into the color harmonized with inside decoration of the vehicle. The first and second rows of seats are equipped with angular adjuster, which can adjust angle, make occupants ride comfortably. Slide rail is equipped under the first row of seat, which can regulate seat position back and forth, adjusting range is 120mm.

The second row of seat in Saloon car can be rotary seat(selection), which can rotate backward 180°, to make the second row occupants can talk face to face with the third row occupants, greatly convenient for occupants. The second row seat backrest can turn backward to the same level with seat cushion, and joint with the third row seat, where occupants can lie to have a good rest.

Disassembly: The first row seat is composed of seat assembly, slide rail assembly and engine cover board assembly, fixed on engine rear cross member with bolt, after unscrew the bolt, the seat can be taken down, see Fig. 4.3-1. There are two nuts on engine cover board, unscrew them, draw the engine cover board forward or backward, the engine cover board can be dismounted. Slide rail and seat are also linked up with bolts, screw out bolts, the slide rail can be dismounted.

The front legs of the second and third rows of seat are all linked up body rear floor with combined bolts, screw out combined bolts, the seats can be dismounted, see Fig. 4.3-2. Push forward the second row seat backrest, the second row seat can tilt forward around the front legs, occupants can get on through this vacated space, to sit on the third row seat.

The front legs of the third row seat are also linked up body rear floor with combined bolts, dismount combined bolts, the seat can be dismounted, see Fig. 4.3-3. Both ends of the third row seat are equipped with regulation mechanism, pulling up the regulation mechanism handle can make the seat backrest and cushion fold up, and also can make the cushion tilt forward round the front legs to lean against the back of the second row seat backrest, to increase the space within, so as to favor the user loading and unloading goods.

https://truckmanualshub.com/

Note:

- Keep the seat surface clean, to avoid strong acid substance to spatter on the seat surface.
- Smoker must note not to throw away dog-end on the seats.

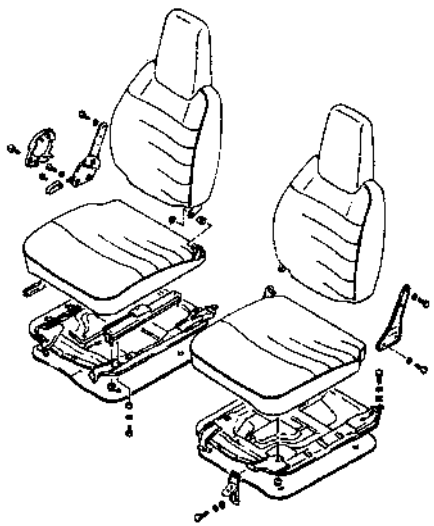

Fig. 4.3-1

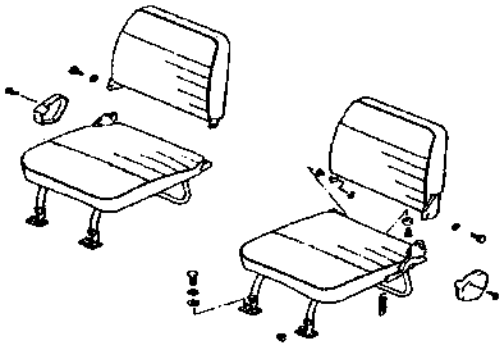

Fig. 4.3-2

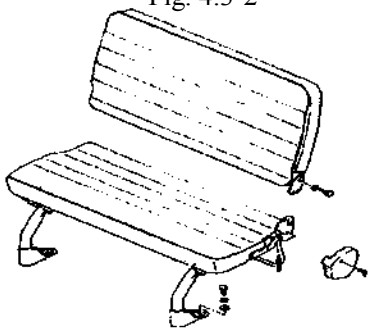

Fig. 4.3-3

https://truckmanualshub.com/

Section 4 Instrument cluster

I. General

Instrument cluster structure as shown in Fig. 4.4-1(taking hard plastic board as an example)

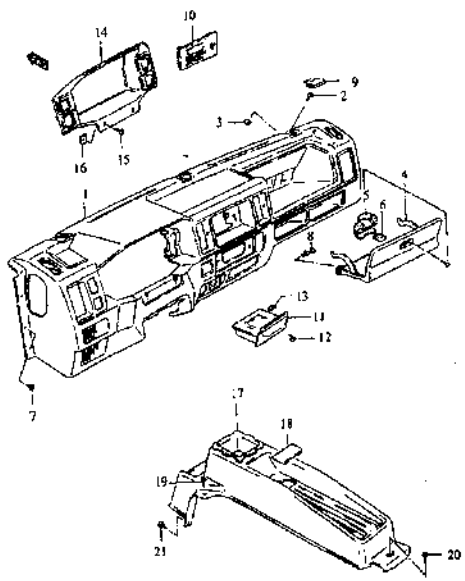

Fig. 4.4-1

1. Instrument cluster body 2. Cross-recessed flat-round-head screw 3. Gasket 4.Glove box 5. Glove box lock 6. Glove box lock spring bolt 7. Cross-recessed half-countersunk-head tapping screw 8. Hinge axis assembly of glove box cap 9. Plug cap 10. Heater control surface board 11. Front ash tray assembly 12. Cross-recessed countersunk-head tapping screw 13. Leaf nut 14. Instrument decoration cover 15. Cross-recessed countersunk-head tapping screw 16. Leaf nut 17. Middle cover board tool box 18. Tool box cover 19. Cross-recessed flat-round-head screw
20 cross-recessed flat-round-head tapping screw 21. Cross-recessed flat-round-head tapping screw

https://truckmanualshub.com/

II. All parts disassembly (as shown in Fig. 4.4-1)

1. Instrument cluster body 1 is installed on vehicle body with cross-recessed flat-round-head tapping screw 2, after dismounting screw, the instrument cluster body can be disassembled.
2. Instrument decoration cover 14 is installed on instrument cluster body 1 with cross-recessed countersunk-head tapping screw 15, when disassembling, the instrument decoration cover can be dismounted after screwing out tapping screw.
3. Front ashtray assembly 11 can foist into the appropriate place under the instrument cluster body or draw out.

Note:

- Do not place caustic substance on the instrument cluster.

Section 5 Front windshield, rear windshield and side windshield

I. Front windshield

1. Front windshield structure is shown as Fig. 4.5-1.

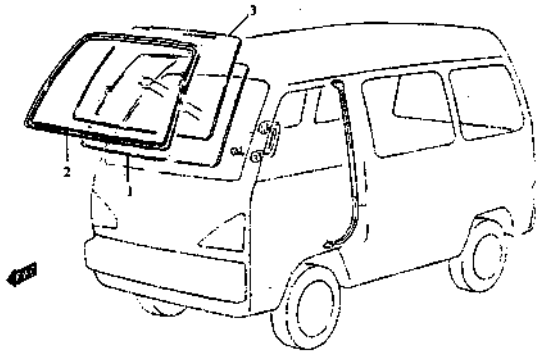

Fig. 4.5-1

1. Front windshield glass
2. Outer decorative moulding of front windshield glass
3. Inner decorative moulding of front windshield

https://truckmanualshub.com/

2. Installation

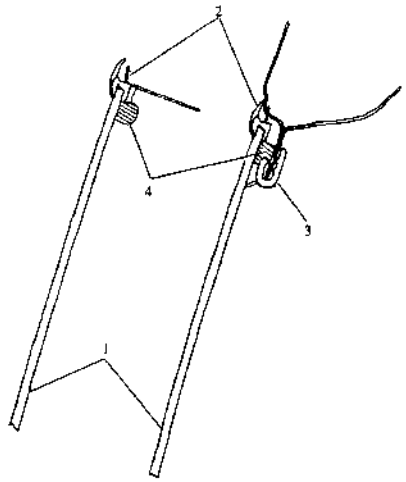

Fig. 4.5-2 Windshield installation

1. Windshield glass 2. Windshield outer decorative moulding
3. Windshield inner decorative moulding 4. Adhesive glue

As shown in Fig. 4.5-2, first install the inner decorative moulding of front windshield glass on front windshield, then install the outer decorative moulding of front windshield glass and front windshield glass with adhesive glue around front windshield.

Note:

●Glue must be daubed evenly on the glass, when adhibiting, good placement must be done in advance, to avoid glass misplacement.

II. Rear windshield

1. Rear windshield structure is as shown in Fig. 4.5-3.

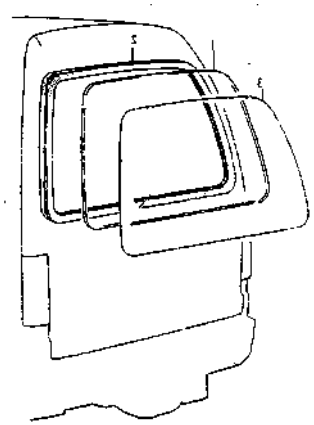

Fig. 4.5-3

1. Rer windshield glass 2. Inner decorative moulding of rear windshield glass
3. Outer decorative moulding of rear windshield glass

https://truckmanualshub.com/

2. Installation

As shown in Fig. 4.5-2, first install the inner decorative moulding of rear windshield glass on rear door window, then adhibit rear door glass installed with the outer decorative moulding of rear door glass and daubed with adhesive glue on rer door window.

Note:

● **Daub glue evenly on glass, good placement must be done in advance**

III. Side window

1. Side window structure is as shown in Fig. 4.5-4.

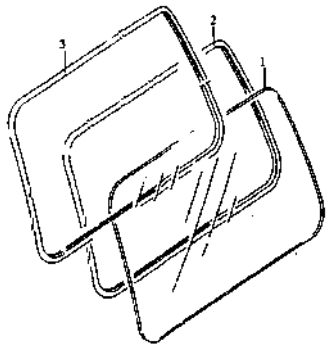

Fig. 4.5-4

1. Rear side window glass
2. Outer decorative moulding of rear side window glass
3. Inner decorative moulding of rear side window glass

2. Installation

As shown I Fig. 4.5-2, install the inner decorative moulding of rear side window glass on rear side window, then adhibit the glass installed the outer decorative moulding of rear side window glass and daubed with adhesive glue on rear side window.

Note:

● **Daub adhesive glue evenly on the glass, when adhibiting good placement must be done in advance, to avoid glass misplacement.**

https://truckmanualshub.com/

Section 6 Bumper

I. Front bumper

Front bumper is composed of front bumper bracket A, front bumper bracket B and front bumper assembly, as shown in Fig. 4.6-1. Two front fog lights are installed on the right and left of bumper lower part respectively.

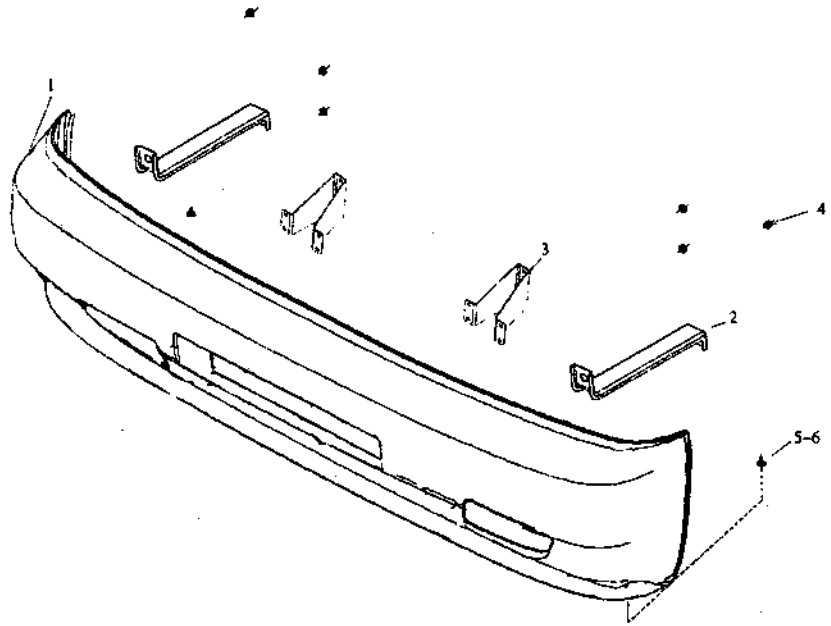

Fig. 4.6-1

1. Front bumper assembly 2. Front bumper bracket AS assembly 3. Front bumper bracket B assembly
4. Hexagon nylon lock nut 5. Cross-recessed flat-round-head screw 6. Gasket

https://truckmanualshub.com/

The front bumper assembly method is as shown in Fig. 4.6-1, screw out the nuts on front bumper bracket A and the screws, the front bumper is dismounted. When installing it, screw the above-mentioned nuts and screws.

II. Rear bumper

When disassembling rear bumper, as shown in Fig. 4…..6-2, screw out screws. When installing it, screw the above-mentioned screws.

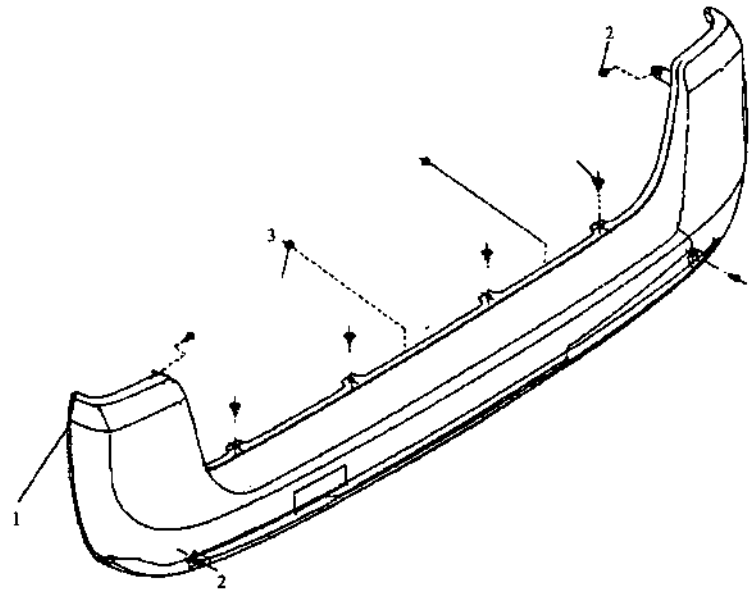

Fig. 4.6-2

1. Rer bumper assembly 2. Cross-recessed flat-round-head screw 3. Hexagon nylon lock nut

https://truckmanualshub.com/

Chapter Ⅴ Air-conditioner system

The function of vehicle air-conditioner system is to make air mass, temperature and humidity in the vehicle be regulated, meet the requirement of occupants for air comfort degree maximally. In order to meet this requirement, CA6350 vehicle air-conditioner adopts relative independent heating system and cooling system. In order to make the structure severeness and control easily, the heating system and cooling system of CA6350 vehicle air-conditioner adopt partial share airway and blower, the control switch adopts multi-function A/C combined switch. CA6350 vehicle air-conditioner has the function that outer air participating circulation.

Section 1 Heating system

I. General

CA6350 vehicle heating system adopts water-heated heater equipment, see Fig. 5.1-1. The heat source of heater is circular coolant within engine water jacket. Heater function is to radiate heat by inside pipe radiator, drive centrifugal fan impeller with direct current permanent magnetism motor, through airway to gain warm hot air, to meet the requirements of occupants for the inside air temperature adjustment and windshield glass defrost and defog.

II. Operating principle of motor

The motor for heater is direct current permanent magnetism motor. Motor work is controlled by ignition switch and heater switch. In order to make occupants get maximum air regulation effect. Heater motor has various rotating speed function. The various rotating speed of heater motor is realized by speed control resistor. The resistance value selection of speed control resistor is realized by occupants through controlling knob switch.

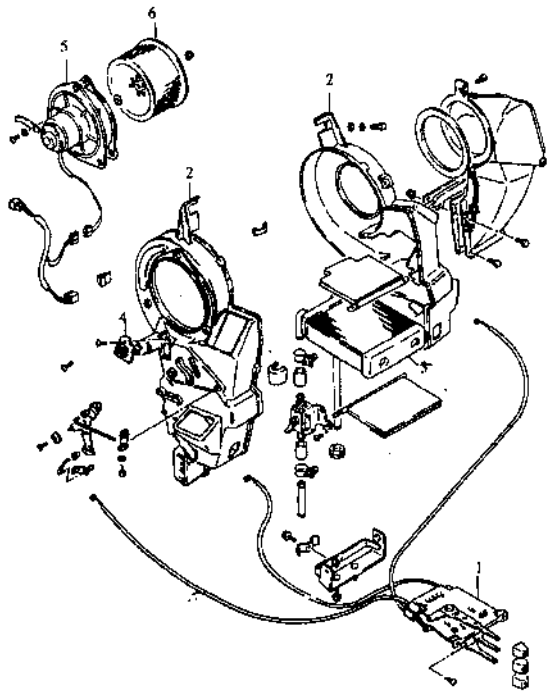

Fig. 5.1-1 Heater structure

1. Control mechanism assembly 2. Right and left shell of heater 3. Water tank assembly

4. Resistor assembly 5. Motor assembly 6. Impeller

https://truckmanualshub.com/

III. Disassembly

1. Speed control resistor

Speed control resistor is installed on the driver side of heater shell.

(1) Disconnect defrost pipe on heater shell driver side, see Fig. 5.1-2.

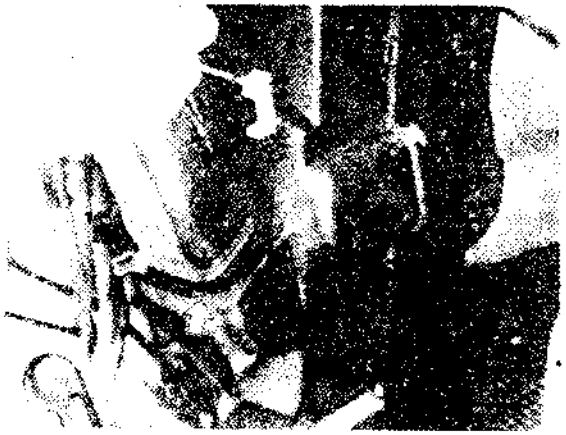

Fig. 5.1-2

(2) Disconnect wiring harness connector, see Fig. 5.1-3.

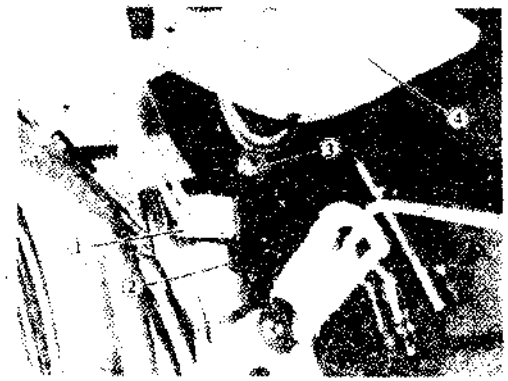

Fig. 5.1-3

1. Wiring harness connector 2. Resistor 3. Screw 4. Motor

(3) Dismount screw.

(4) Dismount speed control resistor.

2. Heater motor (Fig. 5.1-4)

(1) Disconnect the defroster pipe on heater shell drive side.

(2) Disconnect wiring harness connector.

https://truckmanualshub.com/

(3) Dismount screws (3 pieces).

(4) Dismount motor and fan impeller.

Fig. 5.1-4

1. Siring harness connector 2. Screw 3. Motor

IV. Inspection and repair

1. Speed control resistor

This resistor lies on heater shell driver side. Check the presence and absence of crack and damage, if necessary, replace it. If neater motor does not rotate or when you have changed existing resistor, the whole resistor must be check to have how many ohms of resistance value. See Fig. 5.1-5

2. Heater water pipe

Check the connection state of heater hose, and also check whether it is broken, if necessary replace it. See Fig. 5.1-6

Fig. 5.1-5

Fig. 5.1-6

https://truckmanualshub.com/

Section 2 Cooling system

I. Refrigeration system composition

The refrigeration system installed on both CA6350 saloon and common type mini-cars with electronic fuel injection engine and non-electronic fuel injection engine is different in the composition and control. The user should identify them when reading this manual. In order to help the user understand the bought car much better, taking the common type car with non-electronic fuel injection engine, describe the refrigeration system composition and its functions, refer to Fig. 5.2-1.

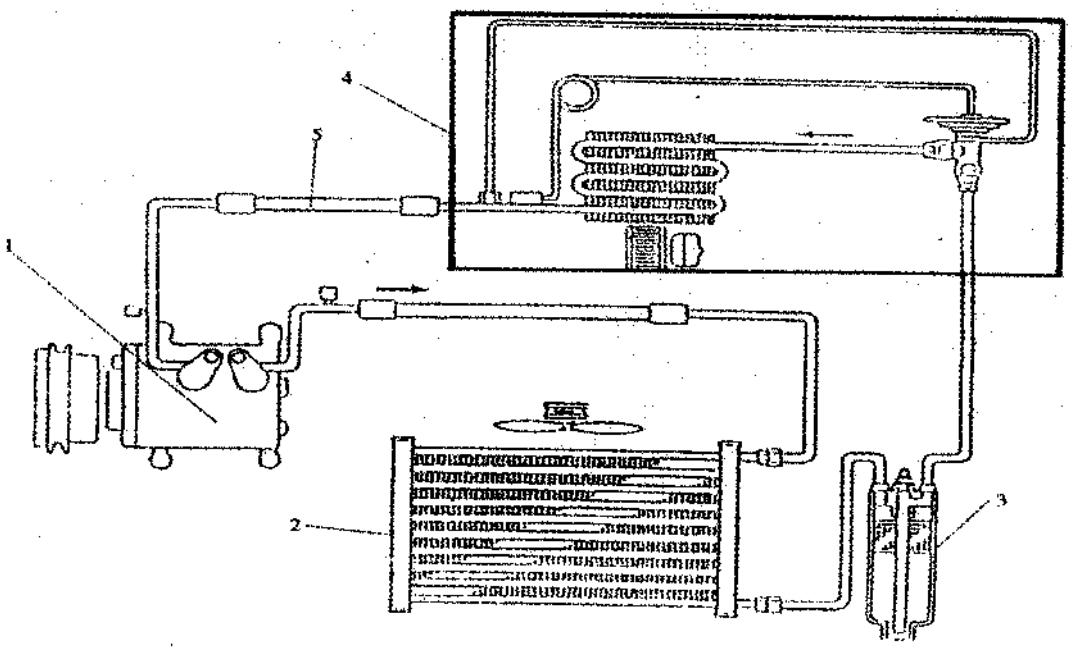

Fig. 5.2-1 Refrigeration system composition

1. Compressor 2. Condenser 3. Stock solution drying bottle 4. Evaporator 5. Refrigeration pipe

https://truckmanualshub.com/

Refrigeration system is composed of compressor, condenser, stock solution drying bottle, evaporator, connection pipes and electric appliance control. The refrigeration system of CA6350 mini-car adopts environmental protection type refrigerant (R134a).

1. Compressor assembly

Compressor is installed on the right front end of engine, is driven by engine through V-belt. The function is to suck in the low temperature and low pressure refrigerant gas flowing from evaporator, through compressing, which becomes high temperature and high pressure refrigerant vapor, then through high pressure pipe, is sent to condenser to refrigerate. Compressor assembly consists of two parts: compressor body, and magnetic clutch and belt. CA6350 mini-car adopts Japanese SS-96 type rotating-leaf compressor. Its shape is as shown in Fig. 5.2-2, relevant technical parameters see Table 5.2-1.

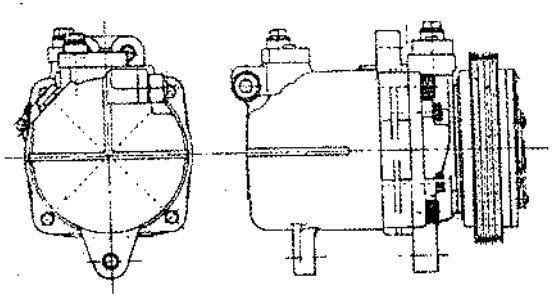

Fig. 5.2-2 Compressor

Table 5.2-1 Technical parameters of compressor

Name	Technical parameters
Refrigerant	R134a
Rotation direction	Clockwise
Allowable incline angel	±35°
Discharge	96cc/r
Max. continuous rotation speed (limit rotation speed)	7800rpm(8400rpm)
Lubricant	RG20
Weight (not including magnetic clutch)	3.2kg

The motive power of compressor is from engine, which is Transmitted through belt and magnetic clutch. Magnetic clutch is installed on the main shaft of compressor, composed of pulley, magnet coil, magnetic plate and bearing, etc., the shape is as shown in Fig. 5.2-3. When magnet coil is electrified, magnetic field is produced, magnetic plate and pulley are attracted into an entity, the pulley drives compressor running. When magnet coil power is cut off, magnetic field disappears, magnetic plat separate from pulley, compressor stops running. Magnetic clutch is electrified within 0.6-1 second, compressor should start. When compressor overloads, magnetic clutch drags, can play a part of protection. The technical parameters of magnetism clutch see Table 5.2-2.

https://truckmanualshub.com/

Fig. 5.2-3 Magnetic clutch

Table 5.2-2 Technical parameters of clutch

Name	Technical parameters
Rated work voltage	12V
Min. engaging voltage	7.5V
Rated power	42W
Transmission torque	19.6N • m
Max. continuous rotation speed	7800r/min
Pulley	O type, outer diameter 118mm
Weight	1.4kg

2. Condenser assembly

Condenser is installed on left lower side of the body. Function of condenser is to condense the high temperature and high pressure gas condensed by compressor into liquid, and emit the heat absorbed by evaporator to the outside of vehicle. CA6350 mini-car adopts parallel flow type condenser, the fan is driven by direct current permanent magnetic disc motor. The heat dissipating capacity is not less than 7000Kcal/h. Condenser shape sees Fig. 5.2-4.

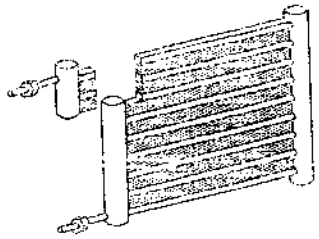

Fig. 5.2-4 Condenser

Technical parameters of condenser see Table 5.2-3

Table 5.2-3 Technical parameters of condenser

Air side capacity		7000±500Kcal/h
Air side pressure drop		≤70.0Pa
Test conditions	Overhot temperature	2.5℃
	Overcold temperature	5℃
	Inlet pressure	1.47Mpa
	Dried ball temperature	35℃
	Wind speed	4.5m/s

https://truckmanualshub.com/

3. Stock solution drying bottle is installed under right front seat of the body. Stock solution drying bottle has three functions: the first is to stock the refrigerant liquid cooled by condenser; the second is to absorb dryly the refrigerant water in the system, to prevent expansion valve from icing; the third is to filtrate the contaminant of the system, to prevent expansion valve and the system from blocking. The structure of stock solution drying bottle sees Fig. 5.2-5. In order to check the refrigerant filling state and refrigeration system work condition, sight glass is set on outlet pipe of stock solution drying bottle. Technical parameters of stock solution drying bottle see Table 5.2-4

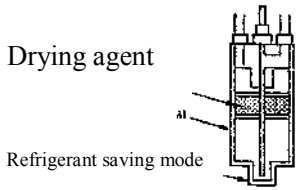

Fig. 5.2-5 Stock solution drying bottle

Table 5.2-4 Technical parameters of stock solution drying bottle

Description	Capacity	445cc
	Net capacity	370cc
	Moisture absorption capacity	MIN4kg(60℃, 90%)
	Filtering agent	Polyester
	Protection gas	N_2GAS
Intensity	Air tightness	3.5Mpa(gage)
	Pressure resistance	503Mpa(gage)

4. Evaporator assembly

CA6350 mini-car evaporator layout has two types. The common type adopts single evaporator, place on right lower instrument cluster, see Fig. 5.2-6. Saloon car adopts twin evaporator, besides a main evaporator on right lower instrument cluster like common type, place an auxiliary evaporator on front ceiling, see Fig. 5.2-7. The function of evaporator is to evaporate the low pressure refrigerant from expansion valve, to absorb heat of surrounding air, to reach the aim of dropping the inside temperature. Main and auxiliary evaporators are parallel connection through pipes. Main evaporator core is pipe-belt type, and auxiliary evaporator core is pipe-plate type. Main evaporator borrows the blower of heater as cool-air blower; auxiliary evaporator has independent blower. Main and auxiliary evaporators have their own expansion valves. The function of expansion valve is to throttle and depressurize, change high pressure liquid refrigerant into fog humid vapor to enter evaporator; and to adjust and control automatically refrigerant flow. Technical parameters of main and auxiliary evaporators see Table 5.2-5 and Table 5.2-6 respectively.

Table 5.2-5 Technical parameters of main evaporator

Refrigeration capacity	2760Kcal/h
Air output	240m^3/h
Air tightness	15kg/cm^2G
Pressure resistance	22.5kg/cm^2G

Table 5.2-6 Technical parameters of auxiliary evaporator

Refrigeration capacity	135Kcal/h
Air output	225m^3/h
Noise	60dB(A)
Power consumption	30W

https://truckmanualshub.com/

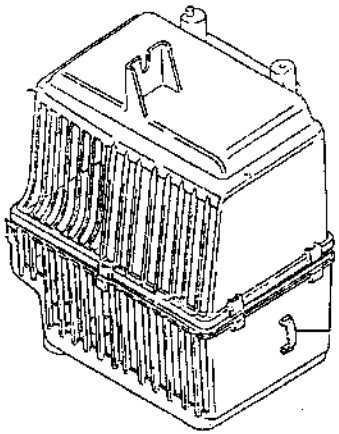

Fig. 5.2-6 Main evaporator

Fig. 5.2-7 Auxiliary evaporator

5. Refrigeration pipe

All assembly of refrigeration system is connected through refrigeration pipe. The induction pipe and outlet elbow of compressor and the induction pipe and outlet elbow of CA6350 mini-car all adopt hose connection. Other pipes all adopt hard moulding pipes. The places that pipes and body may contact or touch all adopt buffer heat shield. All pipe connectors are sealed with hermetic "O" sealing ring. The pipes in the system is divided into high pressure pipe and low pressure pipe. High pressure pipe includes all pipes from compressor outlet to evaporator expansion valve inlet. Low pressure pipe includes all pipes from evaporator outlet to compressor inlet. Technical parameters of high and low pressure pipes see Table 5.2-7 and Table 5.2-8.

Table 5.2-7 technical parameters of high pressure pipe

Using refrigerant	HFC134a
Pressure resistance	5.30Mpa(54kgf/cm^{2}G)×5min.
Air tightness	3.53Mpa(36kgf/cm^{2}G)×5min.

Table 5.2-8 Technical parameters of low pressure pipe

Using refrigerant	HFC134a
Pressure resistance	2.55Mpa(26kgf/cm^{2}G)×5min.
Air tightness	1.67Mpa(17kgf/cm^{2}G)×5min.

II. Operating principle of refrigeration system

CA6350 mini-car adopts vapor compression refrigeration system. The operating principle is as follows: compressor suck in low temperature and low pressure refrigerant gas, through compressing, which becomes high temperature and high pressure refrigerant steam, then through high pressure pipe to enter into condenser cooling, shall emit the heat absorbing from inside vehicle to outside vehicle, after condensing becomes high pressure liquid, after entering into stock solution dryer to store, dry and filter, through expansion valve, change into gas and liquid mixture.

https://truckmanualshub.com/

After this kind of fog-like gas and liquid mixture enter into evaporator to evaporate and absorb inside heat, it besoms low temperature and low pressure gas, which is sucked into compressor to carry out another circulation. In this way, evaporator continually absorb inside heat, condenser continually emit inside heat to outer air, so as to realize the aim of dropping inside temperature.

III. Adjustment and control of refrigeration system

Refrigeration system operation can be adjusted and controlled manually and automatically. Manual operation part is on instrument cluster control board, see Fig. 5.2-8. The blower switch of top evaporator is on the left side of top evaporator, see Fig. 5.2-9.

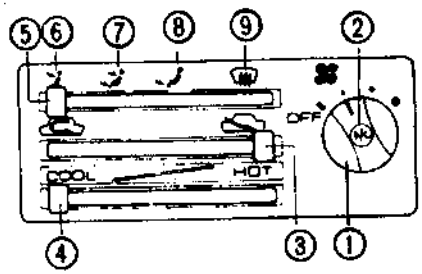

Fig. 5.2-8 Refrigeration system control board

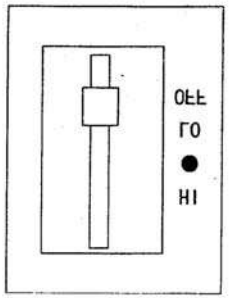

Fig. 5.2-9 Top evaporator control button

Air conditioner switch (A/C switch) is push button switch, the push button is thrust in, indicating light is bright, the air conditioner is turned on; the push button is ejected, the indicating light is black out, the air conditioner is cut off. Air output control adopts 3 gear knob control switch shared with heater. The air output control of top auxiliary evaporator adopts 3 gear push control switch. When refrigerating with air conditioner, besides the above switches and control, you should notice the position selection of controlling air outlet position throttle button ⑤, inside and outside air circulation selection button③, refrigerating and heating selection button ④ . The above lines of button should set on the left side when refrigerating with air conditioner. Button ④ has refrigerating temperature set function, so it can slide to select ideal control temperature in blue area according to the requirement.

Since the engine selected by mini-car has comparatively small reserve capacity, in order to improve the starting performance, control stability, acceleration performance and idle stability of mini-car, if it is equipped with air conditioner, relatively independent the center control system of air conditioner can be adopted, that is, the computer and air conditioner amplifier control the air conditioner operation in different operating conditions. The air conditioning system of CA6350 mini-car with non-electronic fuel injection engine is taken as example to describe in the following.

https://truckmanualshub.com/

CA6350mini-car with non-electronic fuel injection engine adopts air conditioner amplifier to carry out center control, (The automatic control of air conditioner of CA6350mini-car with electronic fuel injection engine is realized by the computer.). The amplifier has totally 7 links of signals input, 1 piece of operating mode selection wire and 2 pieces of switch output. Fig. 5.2-10 is the circuit diagram of air condition electric appliance.

Seven links of signal are:

a. Power supply switch control signal
b. Air conditioner/fan switch signal
c. Water temperature signal
d. Air outlet temperature adjustment signal(that is, preset temperature signal)
e. Evaporator air outlet temperature signal
f. Engine starting signal
g. Vehicle acceleration switch signal

Two links of output are: the switch output of amplifier inner relay and the switch output of triode collector. The relay controls the on-off of compressor magnetic clutch, and the triode controls the on-off of vacuum magnetic valve.

The short circuit and open circuit of operating mode selection wire express two different operating modes. CA6350 mini-car selects the short circuit mode.(When turning on air conditioner, start vacuum magnetic valve open.)

The control of 7 links of signal is described as below:

1. Power supply control

The power supply switch closes, switch on amplifier power, select the short circuit and open circuit according to operating mode, enter two different operating state, to provide the conditions for the signals from b item to g item controlling two links output action. If power supply switch is cut off, amplifier compressor magnetic clutch and vacuum magnetic valve is turn off, to stop air conditioner running.

2. Air conditioner /fan switch control

Air conditioner/fan switch signal closes, automatically open vacuum magnetic valve, attract and engage magnetic clutch 0.8 second later, under the conditions that air outlet temperature is higher than preset temperature, starting signal and vehicle acceleration switch signal both are OFF, and there is no overhot water temperature signal.

3. Water temperature control

Water temperature gage output low frequency pulsating voltage signal, when water temperature reaches 105℃ ± 1.5℃ (sensor impedance reaches 24.2 ±1.0Ω), the input water temperature control signal is overhot water temperature signal. The amplifier must respond to the signal immediately, cut off the compressor magnetic clutch , keep or open vacuum magnetic valve.

4. Air outlet temperature adjustment signal control

There are two ports for this signal input, an adjustable potentiometer with resistance 0-5KΩ is connected outside. When the potentiometer is dialed on 5KΩ(max.), corresponding to temperature presetting on 15 ±2 ℃. When potentiometer is dialed on 0KΩ(min.), corresponding to temperature presetting on 3 ±0.5 ℃.

5. Evaporator air-out temperature signal control

Evaporator air-out temperature signal is provided by evaporator negative temperature coefficient thermistor. Amplifier can logically judge air outlet temperature adjustment signal and evaporator air-out temperature signal. When air outlet temperature is higher than preset temperature, vacuum magnetic valve is opened and attract and engage compressor magnetic clutch, vice versa, close or cut off.

6. Engine starting signal

This signal is a direct current signal. When amplifier receives starting signal, and water temperature is not overhot, in order to reduce engine load, cut off compressor magnetic clutch(if it has been attracted and engaged) immediately, and open vacuum magnetic valve.

7. Acceleration switch signal

https://truckmanualshub.com/

Acceleration switch signal is negative logical signal, low level O shows having acceleration signal. When amplifier receives acceleration switch signal, close vacuum magnetic valve and cut off magnetic clutch automatically, and open vacuum magnetic valve 9.2 seconds later, then engage compressor magnetic clutch after delaying 0.8 second.

Besides the above description, the refrigeration system of air conditioner has relatively independent high and low pressure protection control, to realize the protection for the whole system. Action is: when the low pressure of the system is lower than 0.20Mpa or higher than 3.14Mpa, the high and low pressure switches cut off system power supply automatically, realizing protection. Fig. 5.2-11 is the action pressure set point for high and low pressure switches.

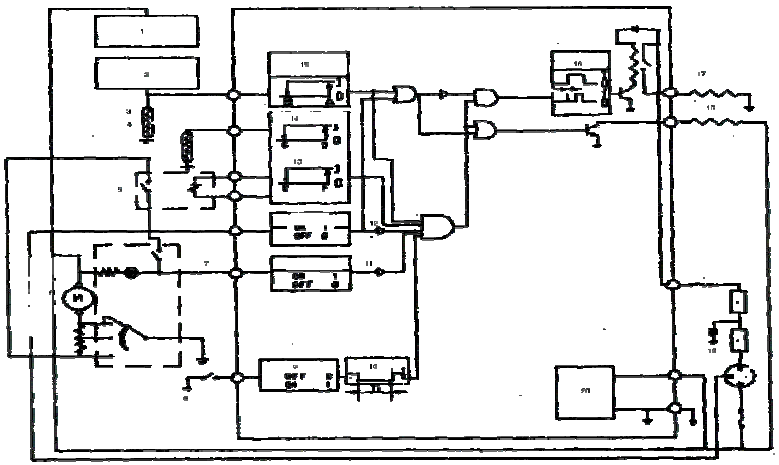

Fig. 5.2-10 Air conditioner electric unit circuit diagram

1. Bimetal adjuster 2. Water thermometer 3. Water temperature gage 4. Evaporator thermistor 5. Air conditioner control switch 6. Heater fan resistance 7. Switch 8. Acceleration stop switch 9. Acceleration stop switch 10. Timer 11. Switch 12. Starter 13. Min. 14. 15. Impendence value of water temperature gage 16. Delay time 17. Compression 18. Vacuum switch valve 19. 20. Adjustment

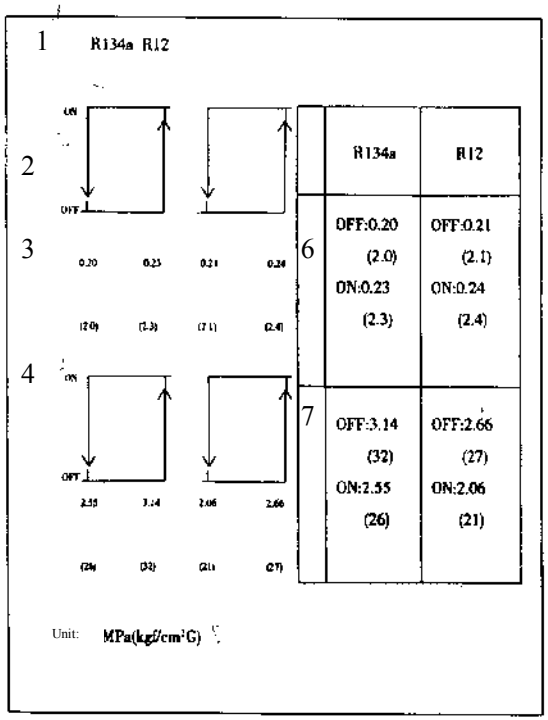

Fig. 5.2-11 Action pressure set point for high and low pressure switches

1. Refrigerant 2. Low pressure side 3. Set point

4. High pressure side 5. unit: 6. Low pressure side 7. High pressure side

https://truckmanualshub.com/

IV. Maintenance and inspection of air conditioning system

1. Current maintenance of air conditioning system

Current maintenance is routine checking, if any problems are found out, eliminate them in time. Items of current maintenance are as follows:

Outage check

a. Check whether there is sludge and sundries on the wings of condenser and evaporator, if necessary, clean and trim.

b. Check whether refrigerating system pipe line interfere with other parts, there is the smear of refrigerant leakage on all connectors, if necessary, inspect them.

c. Check whether the connectors of refrigerating system pipe line and circuit are firm, if necessary, inspect them.

d. Check whether the tightness of compressor driving belt is appropriate, if necessary, regulate them.

Start-up check

a. Check whether compressor starts operation normally, if necessary, check circuit voltage or inspect compressor.

b. Check whether refrigerant amount in the system is proper, if necessary, inspect the system or fill refrigerant.

c.Check whether the temperature difference of inlet and outlet pipes of compressor is normal (inlet pipe should be cold and outlet pipe should be hot), if necessary inspect the system.

d. Check whether condenser fan motor operates normally, the presence and absence of jamming, if necessary, inspect it.

e. Check whether refrigerating system refrigerates normally, if necessary, inspect it.

2. Regular maintenance of air conditioning system

The regular maintenance of air conditioning system is generally carried out once each year. The regular maintenance should be done by special personnel. If necessary, replace parts lost functions, and refill refrigerant.

3. Correct operation of air conditioning system

In order to bring air conditioner into full play and extend its life, besides good service and maintenance air conditioner must be operated correctly. Any fault occurred in air conditioning system must be maintained by trained personnel, do not remove randomly, regulate and dismount and replace parts by yourself, to avoid influencing the normal operation of air conditioner, or fault occurrence. During the period when air conditioner are not operated for a long time, fro example, winter or a long deposition, if the condition is allowed, operate refrigerating system once each month, running 5-10 minutes, to make inside refrigerating system is lubricated cyclically.

4. Qualitative detection of refrigeration performance

Start engine, place air volume switch on high gear, adjust temperature to min. temperature (MAX COOL), press A/C switch, after running 2-3 min, carry out the qualitative detection according to the following methods:

(1) Handling detection: suction tube of compressor makes hand feel cool, while the discharge tube makes hand feel hot, there is an obvious temperature difference between the two tubes.

(2) Observe through sight glass of stock solution dryer, see Fig. 5.2-12. Hand touches the suction tube and discharge tube can feel the temperature uniform.

(3) Hand touch to compare the temperature of inflow and outflow tubes of condenser: inflow tube temperature should be higher than outflow tube. Cool air outlet has cool feel. Expansion valve front and back should have obvious temperature difference, that is hot in front and cold in back.

(4) Handling detection: The temperature from condenser outflow tube to the high pressure pipe line and parts in front of expansion valve should be uniform. The pipe line from expansion outlet to compressor suction inlet has the feeling of icing hand but not frosting, although frosting, it will thaw, small globule after frost thaw can be seen.

5. Quantitative detection of refrigeration performance

Under the condition of 20-35℃ of surrounding temperature, start engine, press A/V switch,

https://truckmanualshub.com/

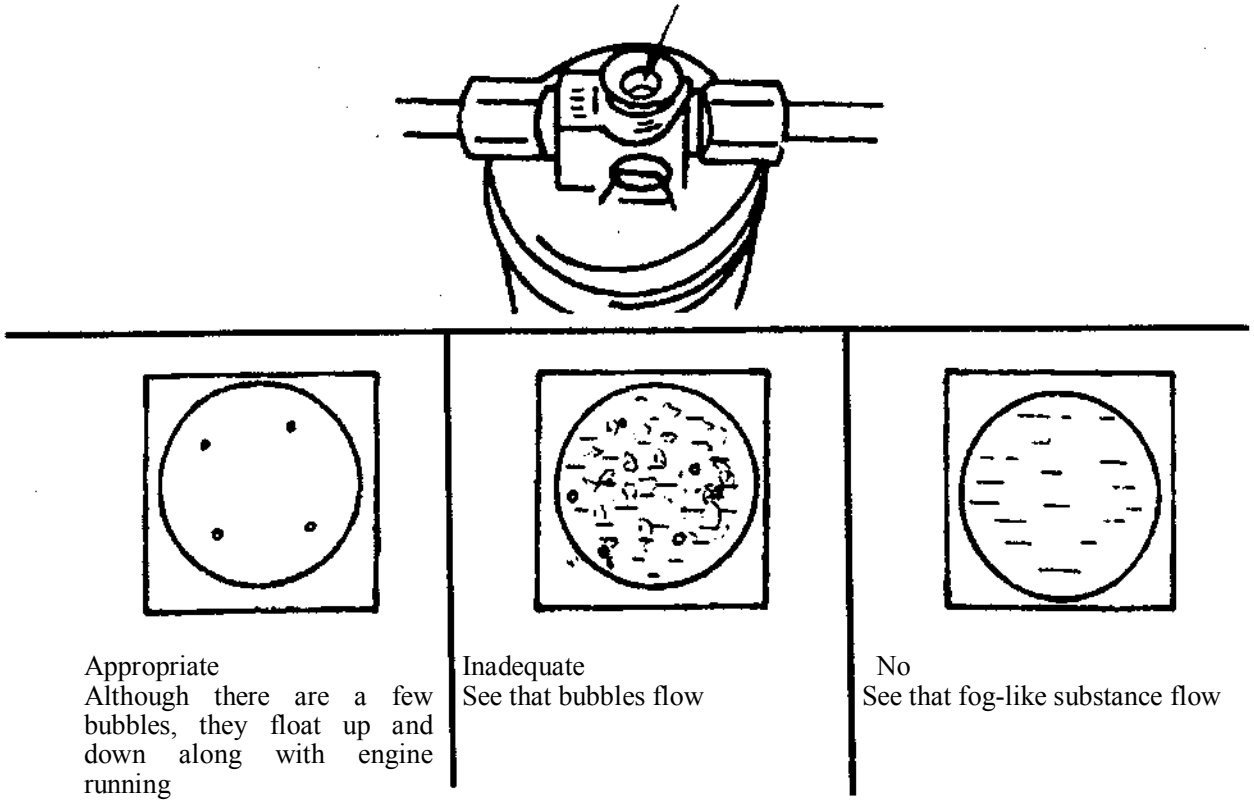

Fig. 5.2-12 Observing refrigerant amount through sight glass of stock solution dryer

https://truckmanualshub.com/

place air volume switch on max. gear, temperature switch on the min. temperature position(MAX COOL), open the door, to make engine operate at 2000r/min for 15-20min, then detect the pressure in high and low pressure sides with high and low pressure gage. The pressure in low pressure side should be 1.7-2.1kgf/cm^2 , that in high pressure side 15-21kgf/cm^2 , and pressure value vary with air temperature. Whenever temperature drops 3℃ from 35℃, the pressure decrease magnitude of high pressure is 0.7-0.8kgf/cm^2 .

6. Inspection of air conditioning system

(1) Notice for air conditioner inspection

1) When filling second time after a new air conditioner had been installed, first vacuumize for 5 min from high pressure side, then vacuumize from both high and low pressure sides.

2)When filling refrigerant, liquid refrigerant should be filled from high pressure end, strictly prohibit starting engine from low pressure end to fill liquid refrigerant; allow starting engine to fill gaseous refrigerant from low pressure end, but strictly prohibit opening the high pressure valve of pressure gage group.

3) In the process of filling refrigerant, never shake refrigerant bottle.

4) Strictly prohibit heating refrigerant bottle in hot water of above 40 ℃ .

5) Filling refrigerant in dry and aeration environment, but avoid high temperature and fire source.

6) Strictly prohibit water, impurity and air from entraining refrigerant pipe, and strictly prohibit blowing mouth and compressed air from blowing refrigeration pipe.

7) When connecting pressure manifold gage hose, pay attention to the correct corresponding connection of pressure manifold gage hose and pressure gage group manifold valve, as well as the correct connection of the connector of high and low pressure gage corresponding to compressor inlet and outlet valve.

8) When connecting pressure manifold gage hose or refrigerant bottle valve, screw down connecting nut with hand, never with such tools as wire cutter.

9) Instrument hose must be disassembled from compressor inlet and outlet hose quickly and adroitly; high pressure hose must be disassembled after compressor stops running(about several minutes), and the pressure of high pressure drops.

10) When disassembling refrigerant pipe or filling refrigerant, never close to the face, to avoid the unexpected damage to eyes.

11) Discharge refrigerant slowly, to prevent carrying off freezing engine oil.

12) When supplementing freezing engine oil to compressor, be sure to fill specific brand or relevant brand freezing engine oil.

13) When replacing air conditioning system parts, it is necessary to supplement freezing engine oil, the requirement sees Table 5.2-9.

Table 5.2-9 Requirement for supplementing freezing engine oil

Replaced parts	Supplemented freezing engine oil amount(ml)	Oil to be used
Condenser	25-30	RG20
Evaporator	15-30	
Stock solution dryer	10-20	
Refrigerant pipe (1 piece)	5-10	

14) When connecting refrigerant pipe, daub some freezing engine oil on “O” seal ring.

15) When connecting compressor suction and discharge tubes, dismount blind plug to discharge filled refrigerant gas slowly, to prevent freezing engine oil from being carried away.

16) Be sure to install stock solution dryer finally, and pay attention to inlet and outlet directions.

17) When screwing and unscrewing refrigerant pipe adaptor, two open-end spanners must be used, and screw according to the torque specified in Table 5.2-10.

https://truckmanualshub.com/

Table 5.2-10 Adaptor tightening torque

Joint	Aluminium pipe size and nut size	Locking torque N•m(kgf•cm)
Nut	φ 8 tubing 1/2″ tubing 5/8″ tubing	12-15(120-150) 20-25(200-250) 30-35(300-350)
Strap	M6 screw (stock solution drying bottle, etc)	4.0-7.0(40-70)

(2) Check items and check points

The general routine check items and check points see Table 5.2-11.

Table 5.2-11 Check items and check points

Number	Check items	Check points	
		Check positions	Check methods
1	Check whether refrigerant leaks out	1. Pipe surface and all adaptor of pipe line 2. Compressor oil seal, gasket and parts surface 3. refrigerating system components damage positions	1. Observe after daubing dense soap solution 2. Using R-134a gas leakage checking gage
2	Check refrigeration pipe	Check whether there is crack, hump, smear on hose face, hose is aged, touches with other parts	Visual inspection
3	Check condenser cleanness	Check whether condenser face wings bend, or hold foreign matter, sludge and clastic	1. Align bent wings with nipper 2. brush off sludge and clastic with hairbrush
4	Check whether refrigerant conforms to the requirement	Judge through the sight on stock solution dryer	Check steps are as follows: see through sight glass: 1. See that clear refrigerant is flow continuously. Small bubbles appear when engine accelerates and decelerates, which shows the normal operation of air conditioning system. Refrigerant is appropriate. 2. If air conditioner is turned on and off periodically, see that foam appear continuously, which shows refrigerant is deficient. 3. See engine oil streaking precedence, which shows the presence of refrigerant leakage. Refrigerant is severely deficient.
5	Check stock solution dryer	1.Check the temperature of inlet and outlet pipes of stock solution dryer, judge whether stock solution dryer is blocked 2. Check whether safe pressure relief valve is damaged 3. Check whether there is crack on sight glass 4. Check whether there is smear on adaptor	Hand touch, visualization

https://truckmanualshub.com/

Table 5.2-11 Check items and check points of air conditioning system

No.	Check items	Check points	
		Check positions	Check methods
6	Check the temperature on high pressure and low pressure sides	1. The temperature of compressor high pressure side outlet, condenser, stock solution dryer, expansion valve inlet is very high, if the temperature of some sections is high and that of other sections is low, which shows those sections may be jammed. 2. The temperature of expansion valve low pressure side outlet, evaporator, compressor inlet should be from cold to cool, there should not appear frosting phenomenon on expansion valve. 3. There should be obvious temperature difference between high pressure side and low pressure side of compressor, otherwise, which shows that there is no refrigerant or system leakage.	Hands touch
7	Check magnetic clutch operation state	1. Check the presence and absence of fault in clutch coil circuit section. 2. Power on and power off, check whether magnetic clutch operates.	Cut in and off circuit to check, if necessary, check after the short circuit of high and low pressure switches
8	Check compressor operation state	1. When compressor is running, the presence and absence of abnormal knocking. 2. The temperature difference between compressor inlet and outlet is normal or abnormal. 3. Compressor vibrate severely or not.	Start compressor to check
9	Check compressor belt	1. Check the looseness and tightness of belt 2. Check the abrasion of belt, which is broken.	Hands press to check, eyes measure
10	Check the idle lifting unit of air conditioner	1. Check whether the air passage connection of idle lifting unit is correct. 2. When checking engine's idle operation state, turn on air conditioner, whether engine rotation speed increases automatically or not.	Eyes measure, if necessary adjust the adjusting screw of vacuum actuator, to guarantee the engine rotation speed at idle speed, after turning on air conditioner adjust automatically to required rotation speed.
11	Check the adherence state of the temperature sensing pack of expansion valve	Check whether temperature sensing pack and evaporator outlet are adherence and thermal insulation, protective layer is bound up firmly.	Eyes measure, hands touch
12	Check the presence and absence of slit on air conditioner shell	Check the presence and absence of slit on core and shell connection, whether air pipe connection is good, has break phenomenon.	Eyes measure
13	Check the connection state of air conditioner circuit	Check whether the connection of air conditioner circuit connector is safe. Check whether air conditioner circuit wire is over hot , and rotation parts and burr parts bump each other.	Eyes measure, hands touch
14	Check the connection state of air conditioner hose	Check whether air conditioner hose and discharge pipe are safe, have come-and-go room, bump with overhot parts, running parts and closed angle parts, or not.	Eyes measure, hands touch
15	Check blower operation state	Check whether blower has abnormal knocking, foreign matter jams fan impeller, it touch other parts, fan motor bearing needs oil, or not.	Ears listen, eyes look

https://truckmanualshub.com/

(3) Inspection with compound pressure gage
The judgment on air conditioning system operation state with compound pressure gage(manifold pressure gage) sees Table 5.2-12

Table 5.2-12 Judgment on air conditioning system operation state with compound pressure gage

Measured value of compound pressure gage	Judging fault	Reasons
The pressure on high and low pressure sides is lower than specific value	Refrigerant is deficient	Refrigerant leakage
The pressure on high and low pressure sides is much lower than specific value	Refrigerant is severely deficient	Serious refrigerant leakage
The pressure of low pressure side is close to zero that of high pressure side is higher than specific value.	Expansion valve is out of work.	Expansion valve jams or temperature sensing pack is out of work.
The pressure of high and low pressure sides is higher than specific value.	Refrigeration cool is not cold enough.	Refrigerant is overmuch, expansion valve adjustment is not proper, having air.
The pressure of high and low pressure sides is much higher than specific value.	Refrigeration cool is not cold, there appear bubbles in sight of stock solution dryer infrequently	There is air in refrigerating system.
The pressure of high pressure side is lower than specific value, the pressure of low pressure side is higher than specific value,	There is no cool in refrigerating system.	Expansion valve is damaged or compressor is damaged.
The pressure of low pressure side is close to zero or negative value, the pressure of high pressure side is specific value or slightly higher than that.	The gas discharged from refrigerating system is not cold.	There is water in refrigerant, expansion valve is jammed with ice
The pressure of low pressure side is much higher than specific value, the pressure of high pressure side is slightly higher than specific value.	There is no cool in refrigerating system, low pressure pipe is hot.	Condenser motor is damaged.
The pressure of low pressure side is lower than specific value, the pressure of high pressure side is much higher than specific value.	Refrigerating cool is not cold, high pressure pipe frosts.	Stock solution dryer or high pressure pipe is jammed.

Note: 1. the pressure of high pressure side of air conditioning system is generally (15-21kgf/cm^2)
2. the pressure of low pressure side of air conditioning system is generally (1.7-2.1kgf/cm^2)

https://truckmanualshub.com/

Chapter VI Electric of Vehicle

NOTE: For ignition system please refer to "Use and Service Manual for Engine."

Section 1 Power Supply System

For CA6350 series, nominal voltage of electrical system is 12V unanimously, single wire system is adopted and the negative pole is earthed. The voltage system consists of battery, alternator, regulator and fuse.

I. Battery

The capacity of battery is 45Ah. When changing the battery, one with the same capacity as the original one must be used.

(I) Normal Maintenance

1. Fluid Level Adjustment

The fluid level of battery electrolyte should always be 10 to 15 mm higher than top edge of pole plate group. Pole plate higher than the fluid level is not permissible. In case of too low fluid level, distilled water should be added to make the level in the normal position.

2. Electrolyte Density Selection

Appropriate electrolyte density should be selected according to the change of season and climatic conditions. See the following table:

Climatic conditions	Density (g/cm2) at 15℃ fully charged	
	Winter	Summer
In area where temperature is lower than -40℃ in winter.	1.310	1.250
In area where temperature is higher than -40℃ in winter.	1.290	1.250
In area where temperature is higher than -30℃ in winter.	1.280	1.250
In area where temperature is higher than -20℃ in winter.	1.270	1.240
In area where temperature is higher than 0℃ in winter.	1.240	1.240

3. Engine Terminal Voltage Control

Engine terminal voltage should be controlled between 13.5V and 14.5V, and the battery should always be kept fully charged.

4. To Use the Starter Appropriately

The starter should not be on for more than 5 seconds each time, and the interval should be over 15 seconds.

5. To Keep Battery Terminal Clean

Battery terminal and binding clip should be cleaned periodically to ensure proper connection.

6. The battery should be stored in a suitable environment, and if stored for more than one month, it should be charged every month.

7. During use, air should flow smoothly through the ventilation hole in the battery filling hole plug.

(II) Trouble Shooting

https://truckmanualshub.com/

1. Sulfuration of Pole Plate
Sulfuration of pole plate refers to a layer of thick, hard recrystalisation of plumbum sulfate formed on pole plate. Mini hole of pole plate sulfated is blocked, therefore, it is hard for electrolyte to filter into the inner layer of pole plate, thus reducing the quantity of inner layer of pole plate that participate the chemical reaction, so the battery capacity is lowered. If serious, the battery cannot be used any longer. Charging with quick charger have distinct effect to remove sulfuration.

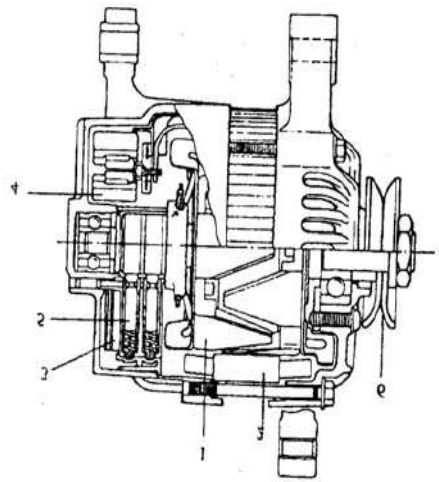

Figure 6.1-1 Alternator

1. Rotor 2. Stator 3. IC regulator 4. Rectifier
5. Electrical brush 6. Pulley

2. Self-discharge
Self-discharge refers to automatic capacity loss of fully charged battery during being static while not working. The battery with self-discharge function should be replaced on time.
3. Short Circuit of Pole Plate

When pole plate is short-circuited, active material of pole plate will fall off in large amount, which is featured by turbid electrolyte, brown material floating up from bottom, and low battery. This kind of battery can be continually used after sediment is cleaned when there is little sediment, otherwise the pole plate should be replaced in case of much sediment.

NOTE:
Note the following when disassembling or replacing the battery:
● Prevent the battery from fire.
● Prevent battery electrolyte form spilling.
● When disassembling, first disassembled should be the negative wire, and then the positive one.
● After assembling the battery, the connection wire of battery should be connected tightly.

I. Alternator
(I) Structure
Alternators can be classified into two kinds, one is of built-in regulator and the other is of built-out regulator. Whether regulator is built-in or –out, principle of work is the same. Figure 6.1-1 is for built-in regulator type alternator, and no service or maintenance is required in normal conditions.
(II) For principle of work, see Figure 6.1-2.

https://truckmanualshub.com/

(III) Parameters

Model	JF132 JF138	JF158	JFZ162-2	JFZ162-1
Normal working voltage	12V			
Max output current	35A	50A		
Polarity	Negative pole earthed.			
Built of regulator	Built-out		Built-in	
Effective diameter of pulley	ϕ65mm	ϕ58mm	ϕ58.5mm	
Idle rotation speed	1200r/min			
Adjustable voltage	13.8—14.8V		14.5±0.3V	
Rotation direction	Clockwise viewed from pulley side			
Max allowable rotation speed	13000r/min		15000r/min	
Commutation mode	Full wave commutation			

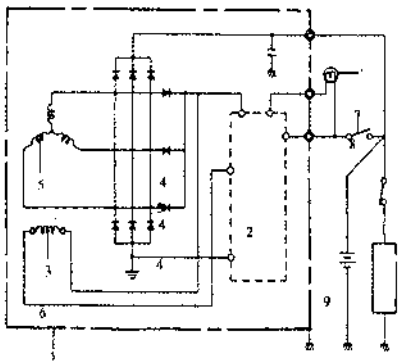

Figure 6.1-2 Working Principle of Alternator

1. Alternator with regulator 2. IC regulator 3. Stator coil 4. Diode
5 Three groups of diode 6. Magnetic field coil (rotor coil)
7. Indicator lamp for charge 8. Main switch 9. Battery

https://truckmanualshub.com/

(IV) Trouble Shooting
NOTE:
● Never mix up the polarity of Terminal IG and Terminal L.
● Prevent short-circuit from being formed between Terminal IG and Terminal L.
● Never connect Terminal I to Terminal E with any lead.

1. Engine Noise
For alternator with loose driving belt, loose fixing bolt, worn or dirty bearing or bad diode or stator, noise will exist.
2. Malfunction of Indication Lamp for Charge

Trouble	Possible cause	Therapy
Indication lamp for charge does not give light when ignition switch is at ON position and engine is not working.	Fuse is blown. Bulb is blown. Connection wire is loose. IC regulator or magnetic field coil is bad.	Check and replace the fuse Replace the bulb. Tighten the loose connection wire. Repair or replace.
Indication lamp for charge does not go off when engine is running (Battery requires frequent charge.)	Driving belt is loose or worn. There is trouble in IC regulator or alternator. There is trouble in wire connecting.	Adjust or replace the driving belt. Check the power supply system. Check the wire.

3. When battery cannot be charged sufficiently.
When battery cannot be charge sufficiently, check the alternator as follows:
(1) Connect the voltmeter and amperemeter as per Figure 6.1-3. The battery used here should be sufficiently charged.

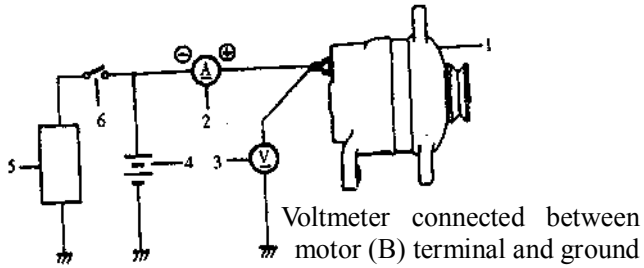

Figure 6.1-3

1. Alternator 2. Amperemeter 3. Voltmeter 4. Battery 5. Load 6. Switch

(2) Turn off all the power-consuming accessories (such as wiper, radio and player), change the engine speed from idle speed to 2000r/min, and read out the value indicated on the meter. In this case, the standard current is 10A max, and the standard voltage is 14.4—15V (at 20℃).
(3) If the voltage exceeds the standard value, check the grounding of brush. If the grounding of brush is normal, IC regulator should be replaced.
(4) If the voltage is equal to the standard value and the engine is running at 2000r/min, light the high beam of the headlamp and check the current. If it is lower than 20A, the alternator should be repaired.
4. When battery is over-charged.
If the alternator needs checking when battery is over-charged, run the engine at 2000r/min and check the voltage. If the measured value varies from the standard value, checking the grounding of brush or the IC regulator.
(V) Disassembling, Knocking-down, Checking and Assembling

https://truckmanualshub.com/

1. Disassembling
(1) Disassemble the negative connection wire of battery.
(2) Disassemble the connection wire of alternator.
(3) Disassemble alternator driving belt regulation bolt, and alternator fixing blot.
(4) Disassemble the alternator.
2. Knocking Down (See Figure 6.1-4)
(1) For convenient assembling, make matching marks according to Figure 6.1-5 before splitting the front and rear casings.

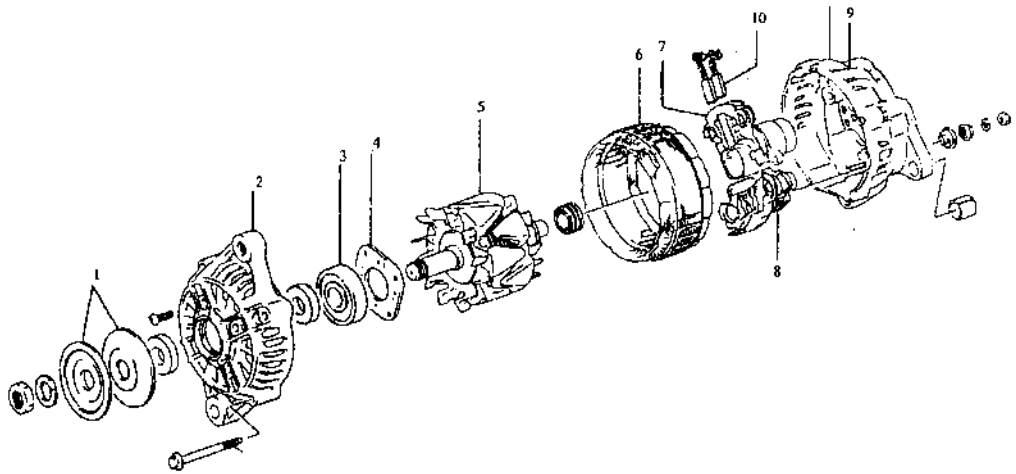

Figure 6.1-4

1. Pulley 2. Front casing 3. Bearing 4. Guard 5. Rotor 6. Stator 7. IC regulator 8. Rectifier 9. Rear casing 10. Brush

https://truckmanualshub.com/

(2) Disassemble the casing bolts from the alternator. See Figure 6.1-6.

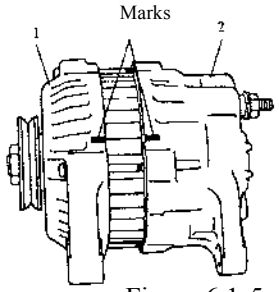

Figure 6.1-5

1. Front casing 2. Rear casing

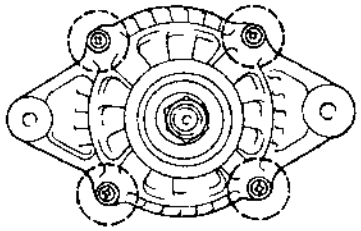

Figure 6.1-6

(3) Insert a stick into between stator core and front casing, to separate the front and rear casings of the alternator. See Figure 6.1-7.

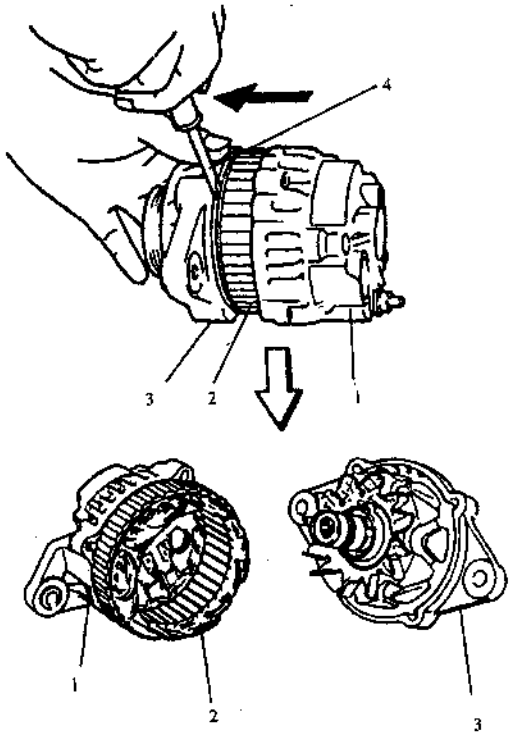

Figure 6.1-7

1. Rear casing 2. Stator 3. Front casing 4. Stick

(4) Loosen the pulley nuts with a vice and disassemble the pulley. See Figure 6.1-8.

https://truckmanualshub.com/

While using a vice, put a piece of clean cloth between the rotor and chop in order not to damage the rotor.

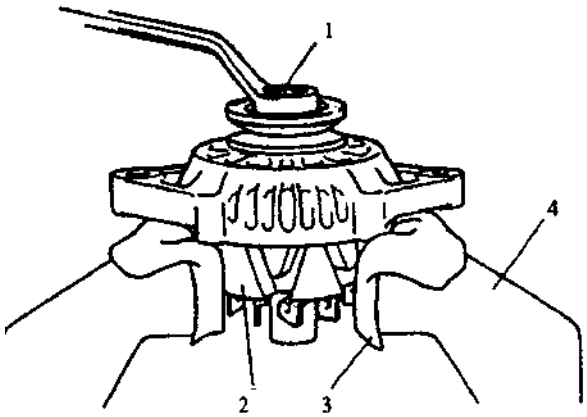

Figure 6.1-8

1. Pulley nut 2. Rotor 3. Cloth 4. Vice

(5) Disassemble the rotor from the front casing and separation ring.

(6) When disassembling the front bearing, the bearing guard screw and the guard should be disassembled. See 6.1-9.

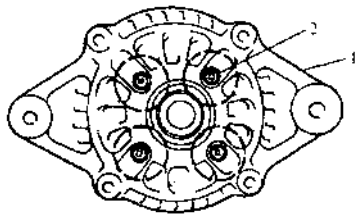

Figure 6.1-9

1. Front casing 2. Guard screw

(7) When disassembling the rear casing, please use a hydraulic machine tool. See Figure 6.1-10.

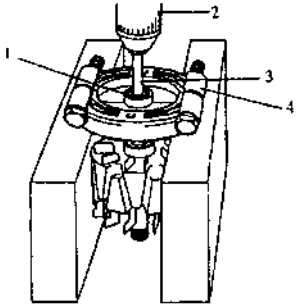

Figure 6.1-10

1. Rear bearing 2. Hydraulic press 3. General push-brace 4. General tool

(8) Slightly move the stator away from the rear casing, loosen the three screws and battery terminal screws, and then disassemble the rotor including the regulator and rectifier assembly. See Figure 6.1-11.

https://truckmanualshub.com/

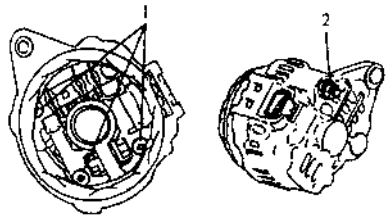

Figure 6.1-11

1. Screw 2. Battery terminal screw

(9) Use a searing iron of big power (over 180W) to separate the weld from the regulator to the rectifier assembly. Disassemble the stator lead. See Figure 6.1-12.

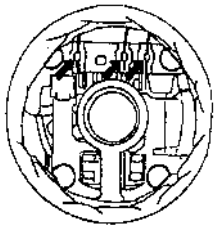

Figure 6.1-12

(10) To disassemble the brush, first disassemble the brush support cover as per Figure 6.1-13. Then separate the weld with the searing iron. Disassemble the brush support cover and pull out the brush. See Figure 6.1-14 and Figure 6.1-15.

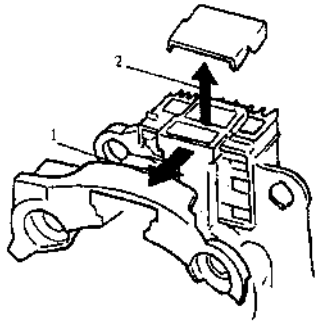

Figure 6.1-13

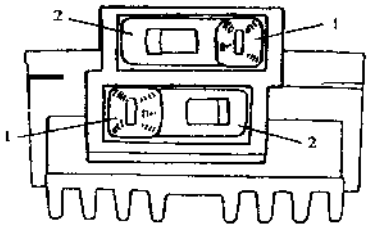

Figure 6.1-14

1. Searing iron 2. Brush support

https://truckmanualshub.com/

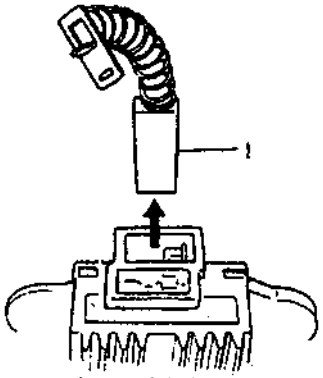

Figure 6.1-15

1. Brush

3. Checking

(1) Check the fan belt for looseness and soundness.

(2) Check the rotor.

Use an ohmmeter to check each slip ring of rotor for conductivity. In case of not conducting, the rotor should be replaced.

Use an ohmmeter to check the conductivity between the slip ring and the rotor. In case of conducting, the rotor should be replaced.

Check the surface of slip ring for roughness and scratch. If it is rough or scratched, the rotor should be replaced.

(3) Check the stator.

Use an ohmmeter to check the conductivity of all leads. Replace the stator in case of not conducting.

Use an ohmmeter to check the conductivity between core lead and stator core. In case of conducting, the stator should be replaced.

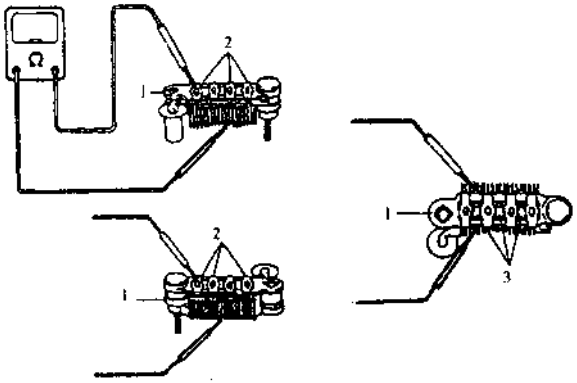

Figure 6.1-16

1. Rectifier 2. Diode lead 3. Three groups of diode

(4) Check the brush and brush support.

For the length of brush, the standard value is 16 mm and the limit value is 2 mm. If it has been worn to the service limit length, the brush should be replaced.

(5) Check the rectifier.

As shown in Figure 6.1-16 use an ohmmeter to check the conductivity between all rectification diodes and each diode lead. Connect the ohmmeter test pins in reserve to check two directions. Under either circumstance, conductivity should only exist in one direction. Otherwise the rectifier should be replaced.

https://truckmanualshub.com/

Use the same method and steps as above to check the conductivity between each lead of three groups of diode. Conductivity should only exist in one direction.
(6) Check the capacitor.
Measure the capacitance with a capacitance meter. The standard capacitance value is 0.5 MF. Replace the capacitor if the test result is not correct.
4. Assembling
The order for assembling is the reverse of order for disassembling. Note the following requirements:
(1) Check the installation direction of brush for correctness.
(2) Tighten the alternator pulley nut to the specified torque. The standard value is 60—75 N•m.
(3) Push the brush into brush support. Infix appropriate metal wire through the hole in the rear casing in order to sustain every brush. When heating the bearing pedestal of the rear casing to 50—60 ℃, assemble the rotor onto the rear casing. After installation of the rotor, remove the metal wire and the marks on the front and rear casings for perfect alignment.
After assembling the alternator, check the rotor for flexible rotation.

III. Regulator
If your vehicle is equipped with a transistor type regulator (An alternator is of built-out regulator.), please pay attention to the working status of the regulator.
(I) If the regulator has adjust the voltage to an excessively high level:
(1) Electrical equipments will burnout.
(2) Service life of battery and of distributor turnoff contact will be largely shortened.
(3) Battery electrolyte will be consumed too fast.
(ii) If the regulator has adjust the voltage to an excessively low level:
(1) Battery will often be charged insufficiently, which leads to sulfuration of pole plate.
(2) it will be difficult to start.
Whenever trouble occurs to the regulator or adjustment and maintenance is required, have it check and serviced by some experts.

NOTE:
● The position of wire connection must be correct rather than wrong.
● Make sure that the earthed pole of regulator conforms to that of vehicle.
● In order not to damage the triode during use, never cut off the loading current suddenly while the rated power is being outputted.
● When welding on the transistor, perform quickly and accurately. The power of electric iron for welding purpose cannot exceed 25W.
● Alternator voltage should not be adjusted to an excessively high level.
● When a transistor type regulator is connected to the alternator, don not allow short “magnetic field” (F) connector with wire.

IV. Protective Fuse
On the wire assembly which connects the positive pole of battery, there is a fusible wire, which in fact is a lead type fuse 80 mm in length, 30A in rated current, 0.85 mm^2 in cross sectional area, and mainly protects circuit of power supply and circuit with large current. In case that trouble of short-circuit occurs in power supply circuit or circuit with large current, the fusible wire will blow quickly for protection purpose. Whenever the fusible wire blows, please find out the cause and remove the trouble. A fusible wire with the same specification should be replaced in time, but never substitute it with another lead.

For CA6350 series vehicle models and CA6350E electronic injection series vehicle modes, 14-route protective fuse boxes are adopted. On the protective fuse box cover, the main circuit and power-consuming equipment protected by the protective fuse chip are indicated. When the protective fuse chip is blown, the trace left by melted fusible wire can be easily seen. When replacing a protective fuse chip, the related switch must be turned off, then install a protective fuse chip with the same specification.

https://truckmanualshub.com/

For fuse box cover of CA6350 series carburetor vehicle, see Figure 6.1-17.

For fuse box cover of CA6350E series electronic injection vehicle,

Headlamp (high beam)	Headlamp (low beam)	Brake	Interior lamp Fog lamp	Instrument lighting	Left combination lamp	Right combination lamp
Instrument Ignition system	Heater		Wiper Washer	Turn signal lamp Reverse lamp	Warning lamp Horn	Radio and tape player
Headlamp (high beam)	Headlamp (low beam)	Brake	Interior lamp Fog lamp	Instrument lighting	Left combination lamp	Right combination lamp
Instrument Ignition system	Heater		Wiper Washer	Turn signal lamp Reverse lamp	Warning lamp Horn	Radio and tape player

see Figure 6.1-18.

Figure 6.1-17 Fuse box cover of carburetor vehicle

Headlamp	Warning lamp Horn Brake	Interior lamp Fog lamp	Electronic injector Main relay	ECM Computer	Electronic injector and AC relay	Fuel pump Oil nozzle
Instrument Ignition system	Heater AC	Turn signal lamp Reverse lamp	Wiper Washer	Instrument lighting Front combination lamp	License plate lamp Rear combination lamp	Radio and tape player

Figure 6.1-18 Fuse box cover of electronic injection vehicle

V. Relay Socket

Electronic injector		Fuel pump		AC
		Oil nozzle		
High beam		Low beam		Condensator
				Fan

Positions of relays in the relay socket are shown in Figure 6.1-19.

Figure 6.1-19 Relay socket

https://truckmanualshub.com/

Section 2 Starting System

I. Circuit of Starting System

The starting system consists of battery, starting motor, ignition switch and related electrical wires. See Figure 6.2-1 for circuit diagram.

II. Starting Motor

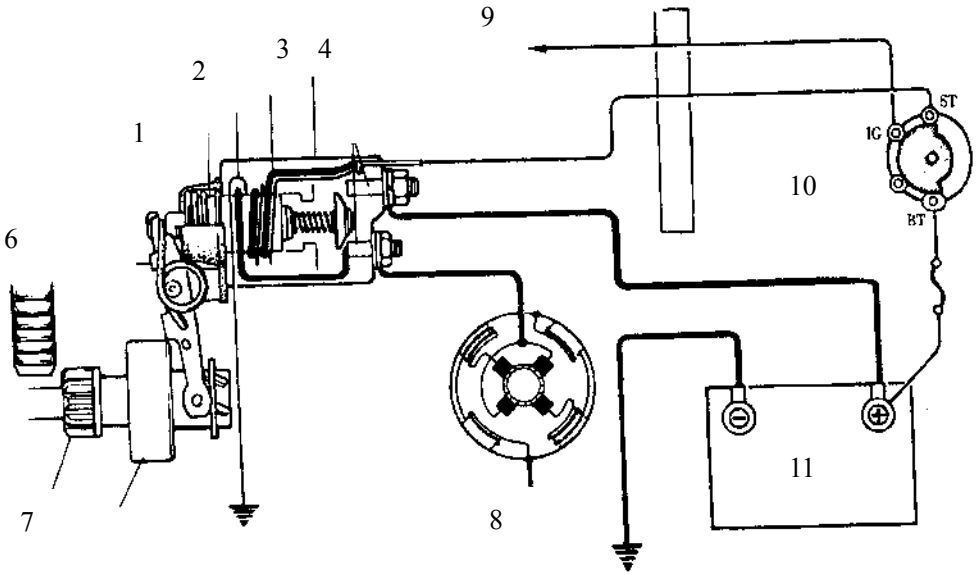

Figure 6.2-1

1. Core 2. Detention coil 3. Traction coil 4. Electromagnetic switch 5. Electromagnetic switch contact 6. Pinion driving lever 7. Pinion and overspeed clutch 8. Starting motor 9. To distributor 10. Main switch 11. Battery

https://truckmanualshub.com/

(I) See Figure 6.2-2 for structure.

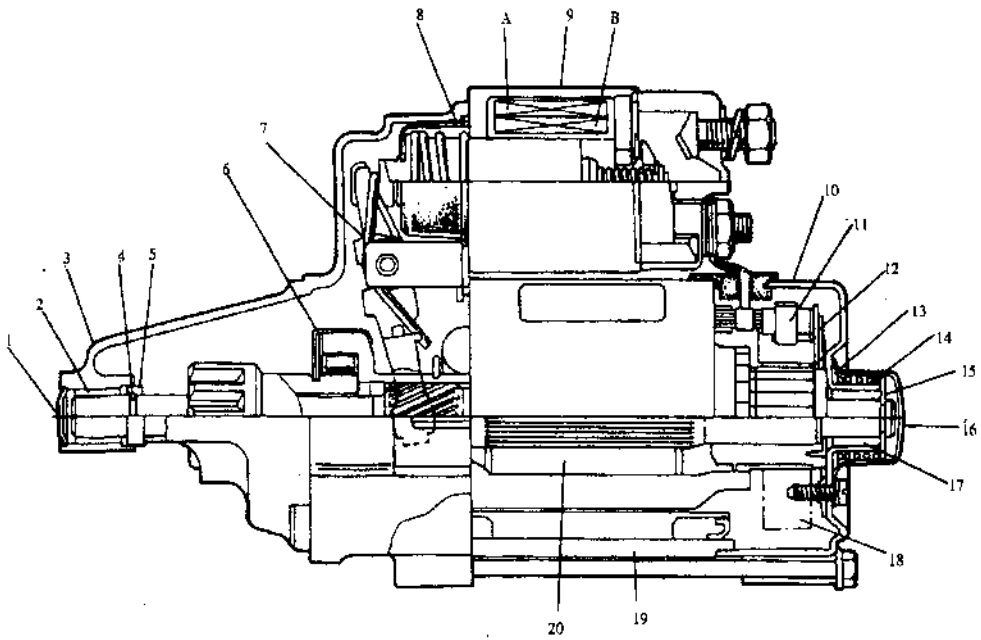

Figure 6.2-2

1. Casing cover of driving mechanism 2. Driving mechanism lining 3. Casing of driving mechanism 4. Armature ring 5. Armature stopping ring 6. Overspeed clutch 7. Pinion driving lever 8. Switch cover 9. Brush switch 10. Rectifier end casing 11. Brush spring 12. Brush support 13. End cover seal 14. Armature braking spring 15 Armature panel 16. Rectifier end cover 17. Rectifier end lining 18. Brush 19. Starting motor yoke 20. Armature

https://truckmanualshub.com/

(II) Parameters

Model	QD1226 QD121A
Output power	12V 0.8KW
Rotation direction	Counterclockwise viewed from pinion side
Brush length	19≥L≥12mm
Number of teeth of pinion	8
Features of idling	When U=11V, I＜50A, n＞5000r/min
Features of loading	When U=9.5V and M=6.86N·m, I＜270A and n＞1200r/min
Operation voltage of electromagnetic switch	Initial intake voltage≤8V, discharge voltage≤4.5V

(III) Disassembling and Assembly
Order for disassembling:
1. Disassemble the negative connection wire from the battery.
2. Disassemble all connection wires from binding posts of starting motor.
3. Disassemble the two installation bolts of starting motor.
4. Disassemble the starting motor.
Assembling order is opposite to disassembling order.

(IV) Knocking down
1. Disassemble the wire from the binding post of electromagnetic switch.
2. Disassemble the electromagnetic switch assembly. In this case, lift up one side of binding post to make core carrying hook come out of driving lever. In case of defective electromagnetic switch, replace the whole assembly.
3. Disassemble the rectifier end cover casing, armature panel and spring.
4. Loosen the two bolts and disassemble the rectifier end casing.
5. Disassemble the brush together with motor yoke.
6. Disassemble the armature.
7. Disassemble the overspeed clutch.
8. Pull the brush out of the brush support.
(V) Inspection
1. Inspect the collector.
(1) Inspect the collector for contamination or burning out. A piece of sandpaper or lathe can be used to make rectification appropriately. See Figure 6.2-3.

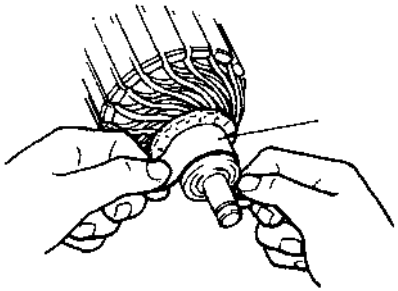

Figure 6.2-3

Grade 300—400 sandpaper

(2) Check the collector for uneven friction. In case of bent armature shaft, replacement is a must. If the armature shaft is not bent, Check the non-roundness of the collector according to Figure 6.2-4. If the deflection of indicator of dial gauge exceeds the limit, repair or replace it.

https://truckmanualshub.com/

Inspection of collector non-roundness	Standard	Limit
	Under 0.05 mm	0.4 mm

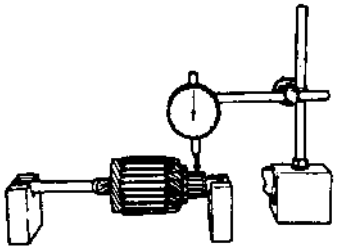

Figure 6.2-4

(3) Check the outer surface of collector for wearing. If the outer diameter is under the limit value, replace the armature.

Outer diameter of collector	Standard	Limit
	28 mm	27 mm

(4) Inspect the depth of mica of the collector. As shown in Figure 6.2-5, if the depth is under the limit value, replace it.
(5) Grounding test: Check the conductivity between the collector and armature coil core. Replace is a must in case of conducting.
(6) Open circuit test: Check the conductivity between the collector chips. In case that any tested point is not conducting, i.e. there is an open circuit phenomenon, the armature must be replaced.
2. Inspect the magnetic field coil.

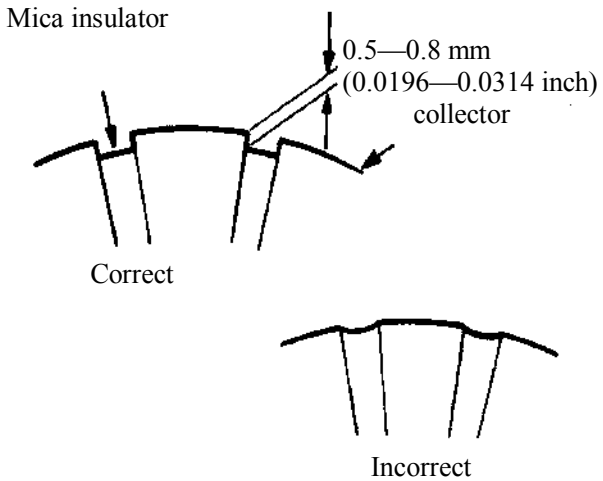

Figure 6.2-5

Check the conductivity between the brush and casing surface. As shown in Figure 6.2-6, if it is not conducting, i.e. there must be an open circuit in the magnetic field coil, the magnetic field coil must be replaced.

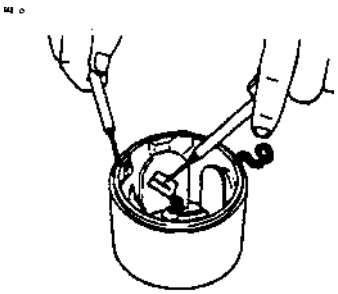

Figure 6.2-6

https://truckmanualshub.com/

3. Check the brush.
Measure the length of every brush to check whether the brush is worn. If the measured length is under the limit value, the brush must be replaced.

Brush length	Standard	Limit
	16 mm	10.5 mm

4. Check the brush support and spring.
(1) Check the brush for movement conditions inside the brush support. If the movement of brush is not flexible, check the brush support for deformation or surface contamination, and repair or replace it according to the specific conditions.
(2) Check the conductivity between the brush support positive pole (insulation end) and negative pole (grounded end). If it is conducting, the brush support must be replaced.
(3) Check the brush spring for wearing or damage. As shown in Figure 6.2-7, replace it in case of abnormality.

Tractive force of brush spring	Standard	Limit
	1.6 kg	1.0 kg

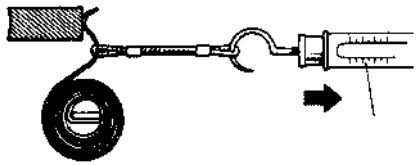

Figure 6.2-7

5. Inspect the driving lever.
Check the driving lever and spring for wearing. Replace it if worn.
6. Inspect the pinion.
(1) Check the pinion for wearing, damage or any other abnormalities. Check the clutch should able to be locked while rotating in the driving direction, and to rotate flexibly while rotating in the reverse direction. Replace it as required in case of abnormality.
(2) Push the core inwardly and then release it. The core should return to the initial position quick in this case. If the reaction is not flexible, replace it.
(3) Traction coil open circuit test: Check the conductivity between binding post S and M of the electromagnetic switch. It must be replaced if not conducting.
(4) Detention coil open circuit test: Check the conductivity between electromagnetic switch binding post-S coil casings. It must be replaced if not conducting.
(VI) Performance test
NOTE: These performance tests must be completed with 3 to 5 seconds, otherwise the coil will burn out.
1. Traction test: Connect the battery and electromagnetic switch as shown in Figure 6.2-8. At this time, the insertion stick type core should be pushed outward. Replace the electromagnetic switch if the core remains unmoved.
2. Detention test: Under the status that the core is stretched outward, connect the lead as shown in Figure 6.2-9, and then disassemble the negative lead from binding post M. At this time, check if the core is detained outside. If the core is pushed inward, replace the electromagnetic switch.

https://truckmanualshub.com/

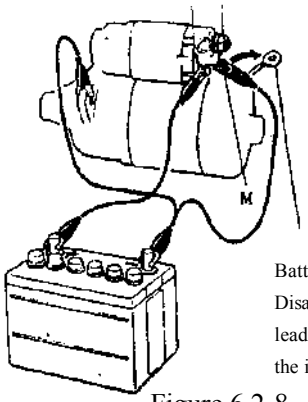

Battery
Disassemble the magnetic field coil lead from the binding post M before the inspection.

Figure 6.2-8

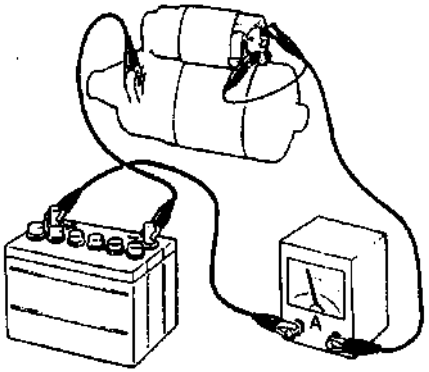

Figure 6.2-9

3. Coil return: Disassemble the negative lead from the electromagnetic switch casing, and at this time check if core has retracted inwardly. If the core does not retract, the electromagnetic switch should be replaced.
4. Performance test: As shown in Figure 9.2-9, connect the magnetic field coil lead to the binding post M, and connect a battery and amperemeter to the starter. Check the starter for flexible rotation and the pinion for even movement. At this time check if the reading of amperemeter is of the specified current. The specified current value is under 50 A at 11V.

Section III. Electronic Injector Code Antitheft System

The electronic injector code antitheft system introduced in this section is one that is equipped under the condition that the vehicle is equipped with an electronic fuel injection engine. If your electronic fuel injection vehicle is equipped with this system, please pay attention to the details in this section.
I. Electronic Injector Code Antitheft System
1. This system consists of three parts—antitheft controller, reading and writing coil and code key.
(1) Antitheft controller
The antitheft controller, a electronic control module controlled by a micro-computer, reads the code in the code transponder when the vehicle is being started, check the code for correctness, and then according to this code controls the working status of engine electronic injection controller, so as to perform the function of antitheft.

https://truckmanualshub.com/

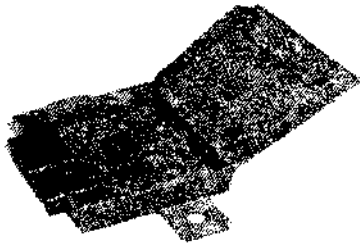

Figure 6.3-1 Antitheft controller

(2) Reading and writing coil
The reading and writing coil is a hollow one slipped on the ignition key cylinder. It is connected to the socket of antitheft controller through wire. Controlled by the antitheft controller, this coil can generate a high-frequency electromagnetic field around the ignition key cylinder, and receive the weak signal sent by code transponder, the signal which will be processed by antitheft controller.

Figure 6.3-2 Reading and writing coil

Figure 6.3-2 Code transponder

(3) Code key
A code key is an ignition key whose handle is equipped with a code transponder inside. Each code antitheft unit is equipped with two code keys, one is red and the other black. The Red one is the main key which should be the first one to act during antitheft unit imitating the key operation. The code transponder inside the code key is a kind of precision electronic products; a tiny special microprocessor chip and a minitype magnetic core antenna are sealed inside a glass tube. Its operation is driven by a weak wireless magnetic field to perform code exchanging with antitheft controller. Its code combinations can be up to $2x10^{28}$ kinds (96 digit binary number), which can ensure that every key is different.
2. Interface of antitheft controller. (See Figure 6.3-4.)

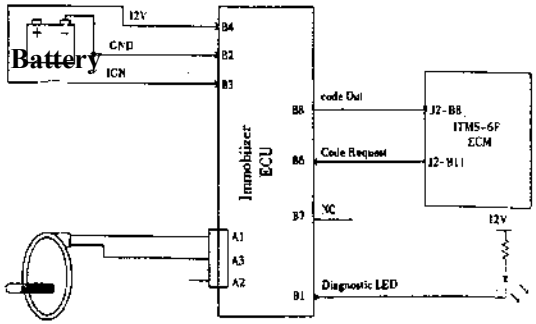

Figure 6.3-4

https://truckmanualshub.com/

3. Definition of antitheft controller socket and terminal (See Figure 6.3-5.)

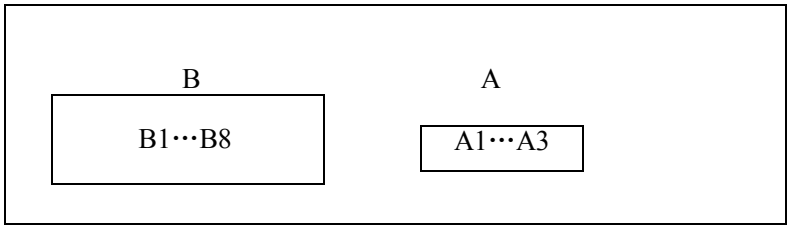

B1 LED indicator lamp	A1 Positive pole of reading and writing coil
B2 Ground	A2 vacant
B3 Ignition switch input	A3 Reading and writing coil ground
B4 Positive pole of battery	
B5 Diagnosis interface	
B6 Communication request line	
B7 Vacant	
B8 Code data line	

Figure 6.3-5

II. Working Principle

The core of electronic injector code antitheft system is antitheft controller. On one hand it reads and check the code in the code transponder through reading and writing coil magnetic field, and on the other hand in perform code communication with engine electronic injector controller, controls the working status of electronic injector controller according to the result of inspection on the code transponder, and allows or prohibits engine starting, so as to perform its antitheft function.

1. To enter into antitheft alertness

When the ignition switch is turned off, the antitheft unit will enter antitheft alertness status automatically. In this case, the LED flashes once every 2.5 seconds, for purpose of warning.

2. To release from antitheft alertness.

Under the condition of antitheft alertness, turn on the ignition switch. The antitheft controller will begin to read the transponder code in the code key. On receipt of the request from the electronic injector controller, it will send the transponder code to the electronic injector controller. If the code is correct, the antitheft unit will be released from antitheft alertness status and engine will be able to start normally. When it cannot read the transponder code or when the code is incorrect, it will send a special wrong code to the electronic injector controller, in which case the engine cannot start.

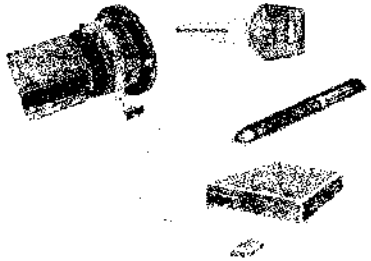

Figure 6.3-6

https://truckmanualshub.com/

III. Key Imitating Process

An antitheft controller has two statuses—non-imitated status and imitated status. It is in non-imitated status at delivery, having not imitated the code key or matches with the electronic injector controller, so in this case any code key can start the engine. After key imitating operation on the vehicle assembly line, the antitheft unit enters the imitated status, so in this case it can check the code of a code key, i.e. only the code key which has been imitated and recorded by the antitheft unit can start the engine.

NOTE: The point for the antitheft system to imitate the key lies on vehicle owner's proper keeping of the "red key." Once the "black key" is lost, the owner can prepare another key at a service station by holding the red one. If the red key is lost, however, the key preparation cannot be done.

For key imitation process, see Figure 6.3—7.

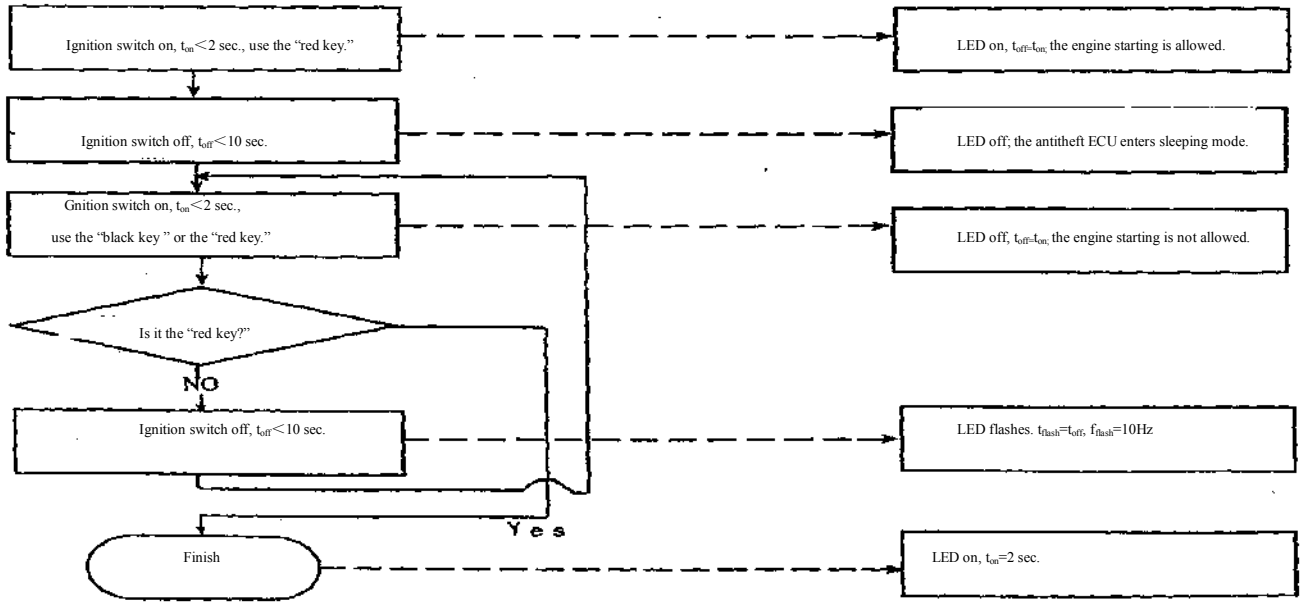

Figure 6.3-7 Red key imitation process chart

https://truckmanualshub.com/

1. Insert the red key, turn on the ignition switch, and turn it off within 2 seconds.
2. Remove the red key and insert the black one. Turn on the ignition switch within 10 seconds and turn it off again within 2 seconds.
3. Now it flashes at 10 Hz to indicate that the antitheft controller is in the imitation process.
4. Insert the red key once again, turn on the ignition switch within 10 seconds, and turn it off again within 2 seconds.

Now the complete imitation operation has been finished. The LED indicator lamp will turn on for 2 seconds, indicating that both keys are recorded in the antitheft unit.

Remark: The imitation process will be terminated under the any of the following conditions: the interval of imitation of the two keys is over 10 seconds; the same key is inserted twice; the red key is not used to finish the imitation process; the ignition key is on for more than 2 seconds; when the ignition switch is turn on, the code key is not used. In this case the antitheft controller will resume the status as that before the imitation operation (keeping non-imitation status or the existed imitation status).

IV. Advantage of Electronic Injector Code Antitheft System

The Electronic Injector Code Antitheft Unit enters antitheft alertness status while the vehicle electrical system is off. It puts the vehicle into the condition that it cannot be started. This way of antitheft is called inactive antitheft, which is the most effective antitheft measure. Its principle says no mis-warning or noise.

V. Replacement of Electronic Parts

If the key is lost or the antitheft controller or electronic injector controller has replaced, the owner should prepare another key at a service station. The details are as follows:

1. New antitheft controller+new electronic injector controller

At the moment the two controllers are connected for the first time. Both of them use a special request and answer code to show that it is in the non-imitation status, and allow engine starting. When having entered the imitation mode, the antitheft unit can imitate a new key. The key first imitated is deem as the “red key,” whose code decides the code by which the antitheft controller contacts the electronic injector controller. On completion of key imitation, codes of all keys will be stored inside the antitheft controller.

2. New antitheft controller+old electronic injector controller

When it is defective, sometime the antitheft controller should be replaced for a new one. When a new antitheft controller is connected with a old electronic injector controller, the existed red key should be used to put the new antitheft controller into key imitating status, and complete the key imitating operation. In this case, the new antitheft controller will be able to communicate with the old electronic injector controller correctly. The engine can be started by the existed key.

3. Old antitheft controller+new electronic injector controller

When an old antitheft controller is connected with a new electronic injector controller, the new electronic injector controller will store the first “legal” antitheft code received into read-only unit, and allow engine starting. The so-called legal antitheft code refers to the code of the existed red key stored in the old antitheft controller. Only when a legal key is used, will the old antitheft controller send this code. Otherwise the old antitheft controller will send wrong-key information, and thus the new electronic injector controller will prohibit engine starting.

4. Old antitheft controller+old electronic injector controller

An old electronic injector controller cannot imitate the code an old antitheft controller. When these two controllers are connected, the engine cannot be started.

5. Replacement of ignition switch and mechanical key

When the key cylinder of ignition switch is to be replaced, the code transponder in the original key must be taken out and put into the new red key (for application at next imitation). Only the transponder of the original red key can make the antitheft controller enter the imitation status.

VI. Antitheft Unit Diagnosis

A LED indicator lamp is used in the antitheft system to show the condition of the system. The LED indicator lamp is equipped in the combination instrument. When a defect is detected by the antitheft controller, the indicator lamp will flash after ignition.

https://truckmanualshub.com/

Trouble Code

LED always on	The antitheft controller and electronic injector controller do not match.
LED on for 2 seconds	Common status: The code key is recognized by the antitheft unit, and the engine can be started.
LED flashing for 30 seconds at 0.5Hz	Trouble in electronic injector controller
LED flashing for 30 seconds at 2Hz	Defective antitheft system which may have been caused by wrong code of code key, defective reading and writing coil, and defective antitheft controller
LED always off	Ignition has been completed, and the vehicle can be started.
LED flashing once every 2.5 seconds	The antitheft unit enters alertness status.

Imitation process

LED flashing at 10Hz for at most 10 seconds	The imitation process has been started by the red key.
LED on for 2 seconds	The imitation process has been completed normally by the red key.
LED off for at most 2 seconds	The imitation process: The code key is detected, but the imitation process has not completed, and the next key is expected.
LED flashing for 5 seconds at 2Hz	The imitation process is terminated because too much time is spent and the same key is repeated.

Section IV. Electrical and Accessories

I. Parameter of Power-consuming Equipments

Circuit system:	12V, single line system, with negative pole grounded
Spark plug	F6TC
Headlamp	LQ12-60/50
Turn signal lamp	21W
Side turn signal lamp	5W
Brake lamp	21W
Tail lamp	5W
License plat lamp	5W
Reverse lamp	21W
Interior lamp	QT12-5SV
Front small lamp	5W
Instrument lamp	3W、4W
Front fog lamp	LQ12-55
Rear fog lamp	QT-12-21
Fusible wire	The section area of wire is 0.85mm^2
	The rated current is 30A.
Fuse	14-route fuse box
Speed meter	Mechanical flexible shaft driving
Odometer	Mechanical
Water thermometer	Electromagnetic
Fuel quantity gauge of reservoir	Electromagnetic
Alternator	Max current output; 35A, 50A, 65A

https://truckmanualshub.com/

Regulator	Transistor type, with Built-in alternator
Starter	Output capacity: 0.8KW
Flicker relay	140W
Headlamp relay	Rated current: 25A
Horn	Rrated current: 4A
Radio and tape player	FM, AM, stereo, auto reverse
	FM, AM, stereo, manual reverse
	FM, AM, manual reverse
	AM, manual reverse
Speaker	5W, 4Ω
Antenna	Hidden-type telescopic antenna

II. Flicker Relay

For wiring of flicker relay, see Figure 6.4-1.

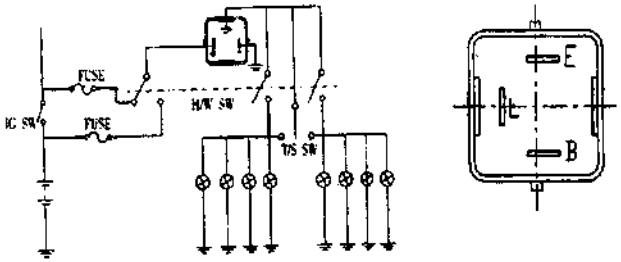

Figure 6.4-1

III. Wiper Intermittent Relay

For wiring position and internal principle of wiper intermittent relay, see Figure 6.4-2.

For 995 cc engine series electronic injection vehicle, the wiper intermittent relay is equipped inside the combination switch. Its principle is the same as that in Figure 6.4-2.

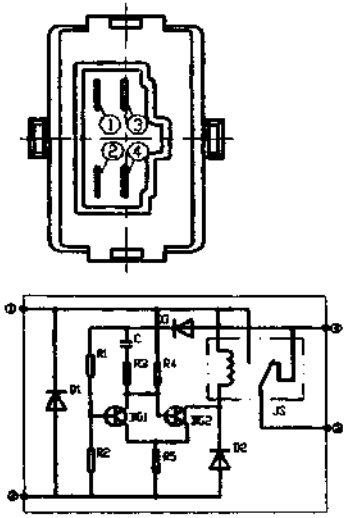

Figure 6.4-2

https://truckmanualshub.com/

IV. Headlamp Relay

For wiring position and internal principle, see Figure 6.4-3.

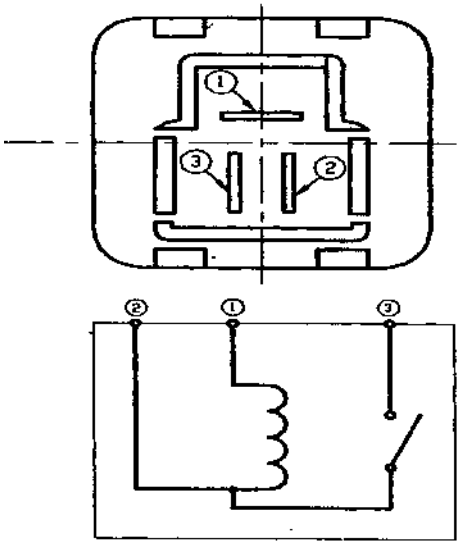

Figure 6.4-3

V. Windshield Power Wiper and Washer

(I) Power Wiper

1. Structure

The power wiper mainly consists of motor 1, driver (linkage) 2 and blade 3. See Figure 6.4-4.

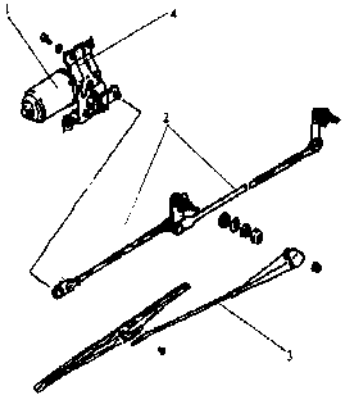

Figure 6.4-4 Power Wiper

1. Motor 2. Linkage 3. Blade 4. Bracket

https://truckmanualshub.com/

2. Operation of Wiper

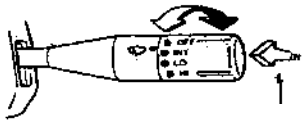

Windshield washer

Figure 6.4-5

The wiper switch is of rotation type, located on the lower right of the steering wheel i.e. the right handle of the combination switch has this function. There are four positions (See Figure 6.4-5). When it is positioned at OFF, the wiper does not work, and at this time the intermittent brush and low-speed brush is short-connected by the reset-control panel. When at intermittent position, the wiper will work intermittently, and the intermittent cycle is 4 second; this is used in light rain. When at LO position, the wiper works slowly. When at HI position, the wiper works fast. When operating it, a driver should try not to shift it from OFF position directly to HI position, in order to decrease the impact of electrical parts and linkage. The right order of switch using is to shift it to LO position and after a while to HI position.

NOTE: The machine is grounded at negative pole. Pay attention to the connection plug direction while disassembling and assembling. No special maintenance is required for the motor. If necessary, the internal part may be cleaned or grease can be changed (lithium-base grease 2).

3. Check for trouble

(1) Whether the knob of driving mechanism is apart, or the nut of wiper arm and blade shaft is loose

(2) When there is abnormality at wiper stopping or starting, check the crankshaft linkage for alignment. Adjust it if not aligned.

(3) Whether the blade or rubber strip is partly damaged or come off.

(II) Windshield Washer

1. Structure

The windshield washer mainly consists of washer tank 1, motor pump 2, nozzle 3, and hose 4. See Figure 6.4-6. The volume of washer tank is 1.5L.

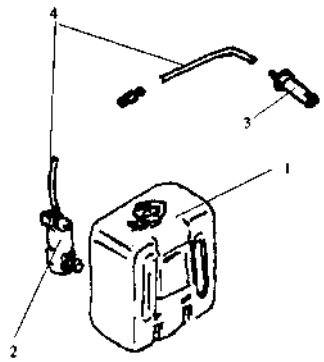

Figure 6.4-6 Windshield washer

1. Washer tank 2. Motor pump 3. Nozzle 4. Hose

https://truckmanualshub.com/

2. Washing fluid

In summer add proper quantity of rust preventive and detergent into 205ppm water. In winter proper quantity of methanol or glycol should also be added.

Ingredient of mixture	Proportion	Application	
Glycol	50%	Temperature	Volumetric thickness
Rust preventive and detergent	2%	Over 0℃	5%
		～-8 ℃	20%
Rust preventive	48%	～-20℃	35%
		～under-20℃	50%

3. Operation of washer

For windshield washer switch, the right-position handle is used commonly with wiper. To lift up the handle will turn on the washer and fluid will be sprayed from the nozzle. After releasing it, the washer will stop working.

NOTE: One spray should not exceed 5 seconds, and interval between two sprays should not be less than 25 seconds. Do not make the wrong connection plug while assembling.

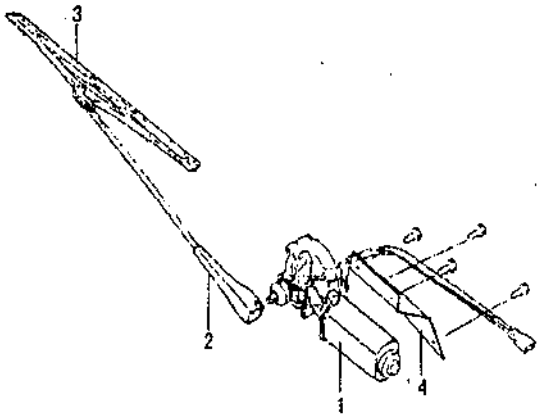

Figure 6.4-7

1. Motor 2. Wiper arm 3. Blade 4. Bracket

VI. Rear Window Wiper and Washer

(I) Rear Window Wiper

(1) For basic structure see Figure 6.4-7.

(2) Operation of rear window wiper

The switch of rear wiper and washer is on the instrument panel as shown in Figure 6.4-8. When wiper switch is pressed, the rear wiper will be in working status, and when it is pressed again the wiper will stop working and be reset.

https://truckmanualshub.com/

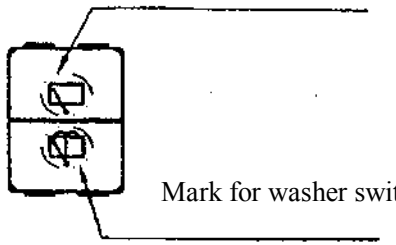

Figure 6.4-8

(II) Rear Window Washer

(1) For structure of rear window washer, see Figure 6.4-9.

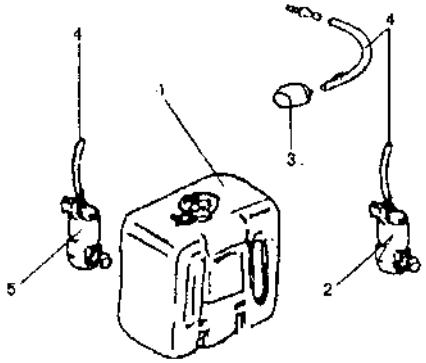

Figure 6.4-9

1. Washer tank 2. Rear washer motor 3. Nozzle 4. Connection water pipe 5. Front washer motor

NOTE: The rear washer and the front washer have the common tank which is respectively controlled by the two washers motor.

(2) Operation of rear window washer

Press the washer knob on the rear wiper and washer switch, and the rear washer will be on and washer fluid will be sprayed from the nozzle. When released, the washer will stop working.

NOTE: One spray should not exceed 5 seconds, and interval between two sprays should not be less than 25 seconds.

VII. Rear Window Defroster

(I) Working principle of rear window defroster

Ice is likely to form on the window in winter, so a defroster is equipped on the rear window glass in order to remove frost and vapor from it. A rear defroster removes frost and fog from the rear window glass through an electric grill. It is composed of a pair of parallel argentiferous ceramic wires. There is a joint box on either side of the glass and an insertion chip is welded on them respectively. One chip is for power supply and the other grounding. See Figure 6.4-10.

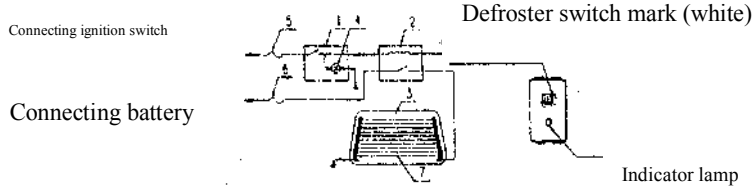

Figure 6.4-10

1. Rear defroster switch 2. Defroster relay 3. Rear window glass 4. Indicator lamp 5. Fuse 6. Fuse 7. Defroster heating wire

(II) Operation of Rear Window Defroster

The switch of rear window defroster is on the instrument panel. See Figure 6.4-10. When the defroster switch is pressed, the indicator lamp is on which indicates that the defroster starts working. Defroster wire consumes much power while working, so the defroster should be turned off after working for 10 minutes. If the frost has been cleared completely, just go on defrosting, but do not exceed 5 minutes each time.

https://truckmanualshub.com/

(III) Test and Service of Defroster
Wire of rear window defroster is very thin and small, so try to use soft cloth when cleaning the rear window glass. If the frost cannot be removed, examine and repair it according to the following possible reasons:

(1) The defroster fuse blows.
(2) The defroster relay is damaged.
(3) The defroster switch is damaged.
(4) The defroster wire is damaged.
(5) The defrosting device circuit or grounding is defective.

VIII. Power Window Regulator and Central Door Lock System (Luxurious type)
(I) Power Window Regulator
1. For power window regulator and its motor transmission component structure, see Figure 6.4-11 and 6.4-12.
2. Operation of power window regulator
There are two buttons on the LF door inner panel, with one for regulation of FL window and other for that of FR window. There is a button on the FR door inner panel. It is for regulation of FR window. With these three buttons, regulation of the FR and FL windows can be done.

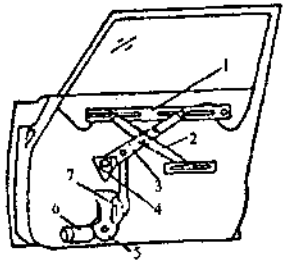

Figure 6.4-11 Power window regulator
1. Glass installation channel panel 2. Driven arm 3. Driving arm 4. Bracket 5. Balance spring 6. Motor 7. Segment gear

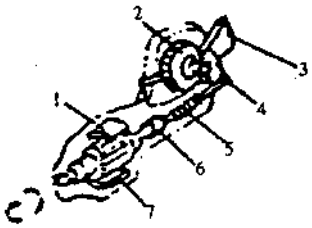

Figure 6.4-12 Motor transmission component
1. Permanent magnet 2. Worm wheel 3. Segment gear 4. Pinion 5. Worm 6. Rubber coupling 7. Motor rotor

https://truckmanualshub.com/

3. Failure check of power window regulator

Failure	Cause	Remedy
One piece of glass can only move to one of the directions.	There is perhaps an open circuit in the control wire between sub-switch and main switch.	Repair
One piece of glass can move to neither direction.	(1) Failure in motor. (2) Break circuit in wire between sub-switch and motor.	Repair or change Repair

(II) Central Control Door Lock System (This function is for the luxurious vehicle model.)

1. Functions of central door control system

1). When FL door is locked by a driver, other doors can be automatically locked at the same time. So the doors can be locked properly without operating other mechanism of every door.

2). The condition for opening the door is just the opposite to that for locking it.

3). For purpose of convenience, beside the control of central system, a passenger can still open the door with the mechanical spring lock of each door.

2. For structure of central door lock system, see Figure 6.4-13.

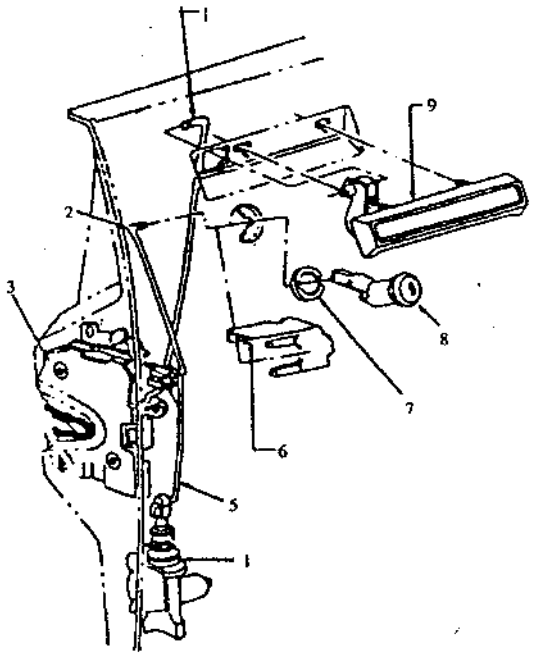

Figure 6.4-13 Central door lock linkage control mechanism

1. Outer door lock handle to door lock linkage 2. Key cylinder to door locks linkage 3. Door lock assembly 4. Door lock motor 5. Motor to door lock linkage 6. Key cylinder positioning bracket 7. Washer 8. Key cylinder 9. Outer door lock handle

https://truckmanualshub.com/

Fault	Reasons	Remedy
Difficult start	Start does not run.	
	1. Fuse is loose or blown.	Repair or replace
	2. Contact in ignition switch is not good or short.	Repair or replace
	3. Battery is exhausted.	Charge or replace
	4. Starter magnetic switch is out of work.	Replace
	5. Battery binding post connector is loose.	Clean and tighten
	6. Bush in starter is abraded.	Replace
	7. Body ground wire is loose.	Repair
	8. Starter magnetic field or armature circuit is opened.	Repair or replace
	9. Repair according to fault code (vehicle with electronic fuel injection engine)	Adjust or replace
	No spark	
	1. Fuse is loose or blown.	Repair or replace
	2. Contact in ignition switch is not good or short.	Repair or replace
	3. Spark plug is out of work.	Adjust gap or replace
	4. High voltage line is short(ground)	Repair or replace
	5. Distributor arm in distributor or distributor cap is broken.	Replace
	6. Ignition timing is incorrect.	Adjust
	7. Ignition coil is out or work.	Replace
	8. Repair according to fault code (vehicle with electronic fuel injection engine)	Adjust or replace
	Intake and exhaust system failure	
	1. Fuel in fuel tank is deficient.	Supplement
	2. Carburetor is maladjusted.	Adjust
	3. Gasoline pump oil supply is deficient.	Replace
	4. Gasoline filter is fouled.	Clean or replace
	5. Choke mechanism is damaged.	Repair or replace
	6. Intake manifold is loose.	Repair
	7.Carburetor is dirtied or fouled.	Clean
	8. Float level is maladjusted.	Adjust
	9. Fuel pipe is fouled.	Clean or replace
	10. Fuel cut-off magnetic valve is faulty.	Repair or replace
	11. Repair according to fault code (vehicle with electronic fuel injection engine)	Adjust or replace

https://truckmanualshub.com/

Continued

Fault	Reasons	Remedy
Difficult. start	Fault of inside engine 1. Cylinder ring 2. Valve clearance is not proper 3. Valve spring has deficient elasticity or break 4. Intake manifold loosen, air is sucked into cylinder. 5. Piston, piston ring or cylinder is abraded. 6. Timing belt fractures. 7. Valve joint is not good. 8. Engine oil brand for engine is wrong. 9. Valve is burned. 10. Valve stem is seized	 Replace Adjust Replace Screw down and replace gasket if necessary Replace worn piston and piston ring, and bore cylinder if necessary Replace Repair or replace Replace Replace Repair or replace valve and conduit
Deficient power	Compression is deficient. 1. Valve clearance is improper. 2. Valve joint is not tight. 3. Valve stem is seized. 4. Valve spring has not deficient elasticity or fractures. 5. Piston ring is seized in groove, or damaged. 6. Piston, piston ring or cylinder is abraded. 7. Cylinder ring is broken. 8. Inspect according to fault code(vehicle with electronic fuel injection engine) Ignition timing is incorrect. 1. Ignition timing is maladjusted. 2. Spark plug is out of work. 3. High voltage line leaks current, connection is loose or is not connected. 4. Ignition wire advancer is faulty. 5.Inspect according to fault code(vehicle with electronic fuel injection engine) Fuel system fault 1. Carburetor air nozzle is fouled.	 Adjust Repair Repair or replace valve or conduit Replace Replace Replace worn piston and piston ring, and bore cylinder again Replace Adjust or replace Adjust Adjust clearance or replace Repair or replace Repair or replace Adjust or replace Clean

https://truckmanualshub.com/

Continued

Fault	Reasons	Remedy
Deficient power	2. Gasoline pump is damaged. 3. Gasoline filter is fouled. 4. Choke mechanism is damaged. 5. Float level is maladjusted. 6. Fuel pipe line is fouled. 7. Fuel tank outlet is fouled. 8. The connection within fuel system is loose. 9. Inspect according to fault code (vehicle with electronic fuel injection engine) Air intake system fault 1. Air cleaner is dirtied or fouled. 2. Choke return is not good. 3. Inspect according to fault code(vehicle with electronic fuel injection engine) Others 1. Brake has drag force 2. Clutch skids	Repair or replace Replace Repair or replace Adjust Clean or replace Clean Screw down Adjust or replace eel or replace cleaner core Repair, adjust or replace Adjust or replace Repair or replace Repair or replace
Engine breathing phenomenon(when accelerating, the vehicle loses reaction temporarily, this phenomenon may occur within all running speed of vehicle, when vehicle begins acceleration from static state, this phenomenon is the most obvious.)	Electric system fault 1.Spark plug is out of work. **2. Distributor arm or distributor cap is broken**. 3. Ignition coil is out of work. 4. High voltage wire leak current. 5. Ignition timing is maladjusted. 6. Capacitor is damaged. 7. Inspect according to fault code(vehicle with electronic fuel injection engine) Fuel system fault 1.Float level is maladjusted. 2.Carburetor air nozzle is fouled. 3. Acceleration pump is faulty. 1.Oil supply volume of gasoline pump is deficient. 2.Inspect according to fault code(vehicle with electronic fuel injection engine) Inside engine fault 1. Cylinder ring leakage cause compression pressure reduces. 2. Piston, piston ring, cylinder is abraded, or valve burning cause too low compression pressure.	Adjust gap or replace Replace Replace Replace Adjust Replace Adjust or replace Adjust Clean Repair or replace if necessary Replace Adjust or replace Replace Replace or bore cylinder if necessary

https://truckmanualshub.com/

Continued

Fault	Reasons	Remedy
Engine rotation speed is not steady.	Fuel system fault	
	1. Gasoline filter is fouled.	Replace
	2. Gasoline pipe line is kinked.	Check and replace if necessary
	3. Gasoline pump is faulty.	Replace
	4. Air intake manifold or carburetor gasket has leakage.	Repair or replace
	5. Float level is maladjusted.	Adjust
	6. Inspect according to fault code(vehicle with electronic fuel injection engine)	Adjust or replace
	Ignition system fault	
	1. Ignition timing is maladjusted.	Adjust
	2. Ignition advancer is faulty.	Repair or replace
	3. High voltage wire leaks current or the connection is loose.	Repair or replace
	4. Spark plug is not good(carbon deposit is too much, gap is improper, and electrode is burned.)	Clean, adjust or replace
	5. Distributor arm or distributor cap is broken.	Replace
	6. Capacitor is damaged.	Replace
	7. Inspect according to fault code(vehicle with electronic fuel injection engine)	Adjust or replace
Engine can not stop (ignition switch is turned off, engine is still running	1. The fuel within carburetor cut of magnetic valve to occur fault.	Check whether the action of magnetic valve is normal, and replace if necessary
	2. Inspect according to fault code(vehicle with electronic fuel injection engine)	Adjust or replace
Idle is steady	Ignition system fault	
	1. Spark plug is out of work.	Adjust gap or replace
	2. High voltage wire leaks current or is not connected.	Repair or replace
	3. Distributor electrode is abraded.	Replace
	4. Ignition timing is improper.	Adjust
	5. Distributor cap is broken, the inside leaks current.	Replace
	6. Inspect according to fault code(vehicle with electronic fuel injection engine)	Adjust or replace
	Fuel system fault	
	1. Carburetor air nozzle is fouled.	Clean
	2. Idle adjustment is improper.	Adjust
	3. Air cleaner core is fouled.	Sweep or replace

https://truckmanualshub.com/

Continued

Fault	Reasons	Remedy
Idle is not steady	4. Air intake manifold, carburetor or cylinder gasket leak. 5. Float level is maladjusted. 6. Choke mechanism is damaged. 7. Fuel cut off magnetic valve to occur fault. 8. Inspect according to fault code(vehicle with electronic fuel injection engine) Others 1. Vacuum hose connection is loose or uncouple. 2. PCV valve is faulty. 3. Compression pressure is deficient. 4. Carburetor and air intake manifold bolt or nut is loose. 5. Carburetor and air intake manifold gasket leak	Repair or replace Adjust Adjust or replace Replace Adjust or replace Connect and screw down Repair Refer to the above description Screw down Replace
Abnormal knock	Ignition system fault 1. Spark plug is over hot. 2. Ignition timing is improper. 3. There is loose phenomenon of connection within high voltage or low voltage circuit. 4. There are worn parts within distributor. 5. Inspect according to fault code(vehicle with electronic fuel injection engine) Furl system fault 1. Gasoline filter or fuel pipe line are fouled. 2. Carburetor air nozzle is fouled. 3. Float level is maladjusted. 4. Gasoline pump is faulty. 5. Suck into air from air intake manifold and carburetor gasket. 6. Inspect according to fault code(vehicle with electronic fuel injection engine) Inside engine fault 1. Accumulated carbon on piston top or cylinder head is too much. 2. Cylinder gasket is burned, causing compression pressure reduction. 3. Valve gap is improper. 4. Valve 5. Valve spring has deficient elasticity.	 Replace spark plug with proper calorific value Adjust Repair Replace Adjust or replace Clean or replace Clean Adjust Replace Repair or replace Adjust or replace Clean Replace Adjust Replace Replace

https://truckmanualshub.com/

Continued

Fault	Reasons	Remedy
Engine is over hot	Ignition system fault	
	1. Ignition timing is improper.	Adjust
	2. The calorific value of spark plug is improper.	Replace with spark plug with proper calorific value
	3. Inspect according to fault code(vehicle with electronic fuel injection engine)	Adjust or replace
	Fuel system fault	
	1. Float level set too low.	Adjust
	2. Carburetor air nozzle is fouled.	Clean
	3. Air intake manifold is loose.	Screw down
	4. Inspect according to fault code(vehicle with electronic fuel injection engine)	Adjust or replace
	Cooling system fault	
	1. Coolant is deficient.	Fill
	2. Water pump belt is loose or broken.	Adjust or replace
	3. The operation condition of thermostat is not steady.	Replace
	4. Water pump performance is not good.	Replace
	5. Radiator core leaks.	Repair or replace
	Lubricating system fault	
	1. Engine oil filter is fouled.	Replace
	2. Screen of engine collector filter is fouled.	Clean or replace
	3. Engine oil pump performance is not good.	Replace
	4. Oil under pan or engine oil pump leak.	Repair or replace
	5. Lubricating oil brand of engine is wrong.	Replace with specific brand lubricating oil
	6. Engine oil within oil under pan is deficient.	Supplement
	Others	
	1. Brake has drag force.	Repair or replace
	2. Clutch skids.	Adjust or replace
	3. Cylinder gasket is burned.	Replace

https://truckmanualshub.com/

Continued

Fault	Reasons	Remedy
The abnormal noise of engine Note: Before checking noise, guarantee the following points: ● Ignition timing has been adjusted well. ● Spark plug conforms to the specification ● Fuel conforms to specification	Crank shaft makes noise 1. Bearing is abraded, causing gap over big. 2. Connecting-rod bearing is abraded. 3. Connecting-rod is distorted. 4. Crank shaft journal is abraded. 5. Connecting-rod journal is abraded. Piston, piston ring, piston pin or cylinder make noise 1. Cylinder in wall is abraded abnormally. 2. Piston, piston ring or piston pin are abraded. 3. Piston is pulled. 4. Piston ring is damaged. Others 1. Camshaft axial clearance is over big. 2. Camshaft journal and cylinder camshaft hole are abraded. 3. Crank shaft axial clearance is over big. 4. Valve clearance is over big. 5. Engine oil of engine is deficient.	 Replace Replace Repair or replace Repair or replace Repair or replace Bore cylinder Replace Replace Replace Replace Replace Adjust Adjust Supplement
Fuel consumption is high	Ignition system fault 1. Ignition timing is improper. 2. High voltage wire is loosely connected or leaks current. 3. Spark plug is not good(Accumulated carbon is too much, clearance is improper, electrode is burned, etc.) 4. Distributor arm or distributor cap is broken. 5. Ignition advancer is faulty. 6. Inspect according to fault code(vehicle with electronic fuel injection engine) Fuel system fault 1. Float level is improper. 2. Fuel tank, oil pipe or carburetor leak oil. 3. Choke mechanism is damaged.	 Adjust Repair or replace Clean, adjust or replace Replace Repair or replace Adjust or replace Adjust Repair or replace Repair or replace

https://truckmanualshub.com/

Continued

Fault	Reasons	Remedy
High fuel consumption	4. Carburetor air nozzle is dirtied or fouled. 5. Air cleaner core is fouled. 6. Inspect according to fault code(vehicle with electronic fuel injection engine) Inside engine fault 1. Compression pressure is deficient. 2. Valve joint is not good. 3. Valve clearance is improper. Others 1. Brake has drag force. 2. Clutch skids. 3. Tire charging pressure is improper.	Clean Sweep or replace Adjust or replace Refer to the above description Repair or replace Adjust Repair or replace Adjust or replace Adjust
Excessive engine oil consumption	Oil leak 1. Engine oil discharge screw plug is loose. 2. Oil under pan fastening bolt is loose. 3. Oil under pan seal is tight. 4. Oil seal leaks. 5. Cylinder gasket is burned. 6. Engine oil filter is loose. 7. Engine oil pressure switch is loose. Pump oil (engine oil suck in combustor) 1. Piston ring is gluey . 2. Piston ring glove or piston rings are abraded. 3. Piston ring opening clearance position is improper. 4. Piston or cylinder is abraded. Engine oil leak along valve rod 1. Valve rod oil seal is damaged. 2. Valve or valve pipe is seriously damaged.	 Screw down Screw down Reseal Replace Replace Screw down Screw down Cleanup accumulated carbon and replace piston ring Replace piston and piston ring Adjust Replace piston and bore cylinder if necessary Replace Replace

https://truckmanualshub.com/

Continued

II. Carburetor

Fault	Reasons	Remedy
Gasoline overflow from carburetor	1. Float valve is dirtied or abraded. 2. Float level set is too high. 3. Float is broken, and with some fuel. 4. Gasket is broken. 5. Float chamber fastening bolt is loose.	Clean or replace Adjust Replace Replace Screw down

III. Exhaust pipe and silencer

Fault	Reasons	Remedy
Silencing performance is bad.	1. Exhaust pipe connection is loose. 2. Silencer gasket is broken. 3. Exhaust manifold or silencer is broken. 4. Exhaust manifold is loose. 5. Body and silencer interfere.	Screw down Replace Repair or replace Screw down Repair

IV. Clutch

Fault	Reasons	Remedy
Clutch skids	1. There is no gap on separate shifting fork top. 2.Friction disc with smear. 3. Friction disc is excessively abraded. 4. Diaphragm spring has deficient elasticity. 5. Clutch plate or fly wheel distorted. 6. Clutch pedal free travel is improper.	Adjust Replace Replace Replace Replace Adjust
Clutch is seized	1. Friction disc is dipped by oil. 2. Friction disc is excessively abraded. 3. Rivet on friction disc bulged. 4. Torsion spring had deficient elasticity.	Replace Replace Replace Replace

https://truckmanualshub.com/

Continued

Fault	Reasons	Remedy
Clutch action is retarded.	1. Clutch pedal free travel is improper. 2. Diaphragm spring elasticity is deficient or diaphragm spring end is abraded. 3. Transmission input shaft spline is abraded or damaged. 4. Transmission input shaft bearing is abraded or damaged. 5. Friction disc excessively pendulates. 6. Friction disc is abraded or with smear.	Adjust Replace Replace Replace Replace Replace
Clutch vibrates	1. Friction disc surface is too smooth. 2. Friction disc has smear. 3. Friction pendulates or friction surface contact is not good. 4. Torsion spring elasticity is deficient. 5. Friction disc rivet is loose. 6. Clutch plate or fly wheel surface distort. 7. Engine frame buffer block is loose or out of work.	Repair or replace Replace Replace Replace Replace Replace Screw down or replace
Clutch emits noise	1. Separate bearing is abraded or broken. 2. Transmission input shaft bearing is abraded. 3. Friction disc combination spline gap is over big. 4. Friction disc is broken. 5. Clutch plate or diaphragm spring is loose.	Replace Replace Replace Replace Replace

V. Transmission

Fault	Reasons	Remedy
Gear is disengaged.	1. Gearshift shifting fork shaft is abraded. 2. Position friction ball is abraded. 3. Spring for position ball has deficient elasticity. 4. Gearshift shifting fork is abraded. 5. Gear axial gap is over big. 6. Synchronizer ring and hub are abraded. 7. Bearing of input shaft, output shaft and middle shaft are abraded.	Replace Replace Replace Replace Replace Replace Replace

https://truckmanualshub.com/

Continued

Fault	Reasons	Remedy
Gear can not de-mesh.	1. Synchronizer spring has deficient elasticity or is damaged. 2. Inner ring groove of synchronizer ring is abraded. 3. Synchronizer ring is seized on friction conical surface. 4. Gearshift shifting fork shaft or gearshift shifting fork distort.	Replace Replace Replace synchronizer lock ring Replace
Gear noise is over loud.	1. Transmission inner gear oil is deficient. 2. Synchronizer is damaged. 3. Gear axial direction gap is too big. 4. Bearing is abraded or broken. 5. Gear is abraded or damaged.	Supplement Replace Replace Replace Replace
Gearshift is difficult.	1. Clutch pedal free travel is over big. 2. Friction disc is abraded. 3. Friction disc has smear. 4. Gearshift shifting fork shaft distort or is abraded unevenly. 5. Position ball is abraded. 6. Synchronizer slider or synchronizer ring are abraded. 7. Synchronizer hub is abraded. 8. Gear selection arm or gearshift lining are abraded. 9. Gearshift flexible shaft regulation is improper.	Adjust Replace Replace Replace Replace Replace Replace Replace Adjust

VI. Rear axle

Fault	Reasons	Remedy
Gear emits noise	1. The gap between drive and driven bevel gears is improper. 2.The mesh between drive and driven bevel gears is improper or cog is damaged. 3.The contact of mesh tooth face between drive and driven bevel gears is improper. 4.Ger oil is deficient or the brand is wrong. 5. Driven bevel gear when rotating oscillates or its fastening bolt is loose. 6.The cogs of half shaft gear or planetary gear are damaged.	Adjust Adjust or replace Adjust Supplement or replace Replace or screw down Replace
Bearing emits noise	1. (Certain noise) Gear oil is deficient or the brand is wrong. 2. (Certain noise) Bearing is abraded or damaged, or parts are damaged. 3. (Emitting noise when inertia coasting) The bearing of drive bevel gear is damaged. 4. (Emitting noise in running) Half shaft gear is damaged.	Supplement or replace Replace Replace Replace

https://truckmanualshub.com/

Continued

VII. Driving shaft

Fault	Reasons	Remedy
Oscillation or emitting noise	1. The gear of universal joint spider is abraded or broken. 2. Driving shaft distorts. 3. Driving shaft imbalance exceeds standard. 4. Driving shaft bolt is loose.	Replace Replace Adjust or replace Screw down
Noise when vehicle starts or coasts	1.Universal joint is abraded or damaged. 2.Driving shaft spline is abraded. 3.Driving shaft is loose.	Replace Replace Screw down

VIII. Braking system

Fault	Reasons	Remedy
Braking force is deficient.	1. Braking pipe line leaks braking fluid. 2. Brake is over hot. 3. The gap between braking hub and braking shoe is maladjusted. 4. Braking shoe patch is stained with oil or water. 5. Brake shoe patch is abraded. 6. Brake wheel cylinder is out of work. 7. Brake disc or brake tongs are stained with oil or severely abraded. 8. Brake tongs assembly does not operate normally.	Repair Repair Adjust Clean or replace Replace Repair or replace Clean or replace Repair or replace
The braking force of right and left wheels is not identical.	1. The brake shoe patch of brake on some side is stained with oil or water. 2. The gap between of brake hub and brake shoe of brake on some side is maladjusted. (Automatic regulation mechanism is faulty.) 3. The bake hub of brake on some side is out of round. 4. Tire charge pressure is not equal. 5. The brake wheel cylinder of wheel on some side is faulty. 6. Front wheel position is maladjusted. 7. The tire model of the same axle is not the same one. 8. The brake fluid of brake pipe line does not flow smoothly. 9. Suspension parts are loose. 10. Brake tongs assembly dose not work normally. 11. Brake tongs are loose.	Clean or replace Repair Replace Adjust Repair or replace Adjust Use the same tires Repair or replace Screw down Repair or replace Screw down

https://truckmanualshub.com/

Continued

Fault	Reasons	Remedy
Brake pedal free travel is over big.	1. Braking fluid within braking oil tank is deficient. 2. There is air in braking pipe line. 3. The braking system of rear wheel is not adjusted well (automatic regulation mechanism is faulty.) 4. Brake shoe distorts. 5. Brake shoe patch is abraded.	Supplement Discharge Repair Replace Replace
Brake shoe or brake tongs does not return.	1. Brake master cylinder piston does not return. 2. The oil return hole within brake master cylinder is fouled. 3. The braking fluid of brake pipe does not flow smoothly. 4. Parking brake is maladjusted. 5. The return spring within brake has deficient elasticity or fractures. 6. Parking brake stay or rod is seized. 7. Brake wheel cylinder or brake tongs piston is seized.	Repair Clean Repair or replace Adjust Replace Repair or replace Repair or replace
Pedal chatters when braking	1. Wheel bearing is loose or damaged. 2. Rear brake hub is out of round. 3. Horizontal oscillation of brake disc is over big. 4. Brake disc plainness exceeds standard.	Screw down or replace Replace Replace Replace
Emitting noise when braking	1. Brake shoe patch is too smooth, or there is foreign matter on it. 2. Brake shoe patch is excessively abraded or distort. 3. Front wheel bearing is broken. 4. Braking floor distorts or bolt is loose.	Repair or replace Replace Replace Replace or screw down

IX. Suspension, steering system and tire

Fault	Reasons	Remedy
Difficult steering	1. Tire inflation pressure is low. 2. The rotation torque of big and small ball pin is over big. 3. Steering driving rod system connection is seized. 4. Steering gear is maladjusted. 5. Steering shaft liner is abraded. 6. Front wheel position is maladjusted.	Adjust Replace Repair or replace Adjust Replace Adjust

https://truckmanualshub.com/

Continued

Fault	Reasons	Remedy
Steering wheel shakes	1. Tire inflation pressure is improper. 2. Front wheel pendulates. 3. The difference of tire diameter of left and right wheels is too big. 4. Wheel hub nut is loose. 5. Wheel bearing is abraded or damaged. 6. The small ball pin of steering horizontal rod is abraded or damaged. 7. Steering gear is maladjusted. 8. Steering gear fixing bolt is loose. 9. Tire or wheel is imbalanced. 10. Front wheel position is maladjusted.	Adjust Repair of replace Use the same tires. Screw down Replace Replace Adjust Screw down Adjust Adjust
Steering wheel misaligns	1. Tire abrasion is uneven. 2. One side wheel braking system does not return. 3. Tire inflation pressure is not equal. 4. Steering pull rod is abraded or distort. 5. Front wheel position is maladjusted. 6. Suspension parts are loose, distorted or damaged.	Replace Repair Adjust Replace Adjust Screw down or replace
Steering wheel is impacted.	1. Tire charge pressure is too high. 2. Absorber performance is not good. 3. The tire diameters between four tires are different. 4. Steering driving system connection is abraded. 5. Front wheel bearing is abraded or damaged. 6. Front wheel is loose. 7. Steering wheel is loose. 8. Tire humps or locally rises.	Adjust Replace Use the same tires Replace Replace Screw down Screw down Replace
Tire is abraded fast or unevenly.	1. Tire inflation pressure is improper. 2. The tire diameters between four tires are different. 3. Wheel bearing is abraded or loose. 4. Tire shakes. 5. Tire is imbalanced. 6. Front wheel position is maladjusted.	Adjust Use the same tires Replace Replace Adjust Adjust

https://truckmanualshub.com/

Fault	Reasons	Remedy
Emitting noise when steering	1. Steering gear bolt or nut is loose. 2. Wheel bearing is abraded or damaged. 3. Steering gear is maladjusted. 4. Steering shaft connection is abraded. 5. The ball pins of steering horizontal or longitudinal pull rods are abraded.	Screw down Replace Adjust Replace Replace
Steering return capacity is poor.	1. The ball pins of steering horizontal pull rod are caught. 2. Steering wheel is caught. 3. Steering gear is lack of grease. 4. Front wheel position is maladjusted. 5. Steering gear is maladjusted. 6. Tire charge pressure is improper.	Replace Repair or replace Lubricate or replace Adjust Adjust Adjust
Abnormal noise from vehicle front	1. Ball pin is abraded or caught. 2. Absorber or upward pivot rubber lining block is damaged. 3. Steady pull rod is loose. 4. Wheel nut is loose. 5. Suspension bolt or nut is loose. 6. Wheel bearing is abraded or damaged. 7. Suspension spring is damaged.	Replace Repair or replace Screw down Screw down Screw down Replace Replace
Suspension subsidence	1. Overload. 2. Absorber is damaged. 3. Spring has deficient elasticity or is broken..	Check load Replace Replace
Body inclines or swings	1. Overload. 2. Steady pull rod is loose. 3. Absorber or upward pivot lining block is damaged. 4. Spring has deficient elasticity or broken.	Check load Screw down Repair or replace Replace

https://truckmanualshub.com/

X. Starter

Fault	Reasons	Remedy
Starter runs, but small gear and tooth ring do not mesh.	1. The small gear of starter clutch is abraded.	Replace
	2. Spline is damaged.	Replace
	3. Bush is abraded.	Replace
	4. Tooth ring wheel tooth is abraded.	Replace
Starter does not rotate or rotation speed is too low to start engine.	Battery fault	
	1. Battery has no charge.	Charge or replace
	2. The contact of battery connector and wire is not good.	Clean and screw down
	3. Ground wire connection is loose.	Screw down
	4. Battery voltage is deficient.	Charge or replace
	Ignition switch fault	
	1. Contact is not good.	Repair or replace
	2. Connection parts are loose.	Repair
	3. Circuit between ignition switch and magnetic switch is broken.	Repair
	Magnetic switch fault	
	1. Lead wire is loose.	Repair
	2. Touch panel is burned or connected badly.	Replace or repair
	3. Circuit within drawing coil is opened.	Replace
	4. Circuit within retention soil is opened.	Replace
	Starter itself fault	
	1. Brush joint is not good or abraded.	Repair or replace
	2. Rectifier is burned.	Repair or replace
	3. Circuit within armature coil is opened.	Replace
	4. Starter is damaged.	Replace
Starter can not stop running.	1. Ignition switch return action is not good.	Repair or replace
	2. The contact of magnetic switch touch panel is blown out.	Repair or replace
	3. Circuit within magnetic switch coil is opened out.	Replace

https://truckmanualshub.com/

Fault	Reasons	Remedy
Battery discharge is over fast.	1. Water pump belt is loose or broken. 2. Battery wiring is loose or pope connector is eroded. 3. Battery electrolyte acidity is over strong, or electrolyte level is too low. 4. Battery pole end plate is damaged. 5. Electrical load is over big. 6. IC adjuster or motor is faulty.	Adjust or replace Clean and screw down Replace or supplement electrolyte Replace battery Reduce load Replace
When ignition switch has been turned on(ON), but engine has not been started, charge indicator light is not bright.	1. Fuse is blown. 2. Lamp is burned out. 3. Connection is loose. 4. IC adjuster is faulty.	Replace Replace Repair Replace
Motor emits noise.	1. Bearing is abraded.	Replace

XII. Electric wiper

Fault	Reasons	Remedy
Wiper does not swing.	1. Fuse is loose or blown. 2. Connector is loose. 3. Brush is suspended or abraded. 4. Rectifier is dirtied or abraded. 5. Magnetic field coil is short or blown. 6. Wiper switch connection end is loose. 7. Intermittent relay is loose or damaged.	Repair or replace Repair Repair or replace Repair or replace Replace Repair Repair or replace
Wiper can not stop swinging.	1.Wiper switch is damaged.	Repair or replace
Wiper rod can not stop at normal position.	1. Wiper rod position set is improper. 2. Return mechanism is damaged.	Adjust Repair or replace
Wiping-brushing effect is bad.	1. Windshield glass is stained with smear. 2. Wiper rod pressure is deficient. 3. Wiper blade is worsened. 4. Wiper blade installation position is improper.	Clean Replace Replace Repair or replace

https://truckmanualshub.com/

XIII. Fuel gage

Fault	Reasons	Remedy
Wrong indication of Instrument	1. Connector contact is not good. 2. Sensor contactor is burned or bimetal components distort. 3. Float movement is irregular. 4. Sensor or fuel gage ground is not good.	Repair Replace Repair or replace Repair
No indication	1. Instrument circuit is opened. 2. Contactor is burned. 3. Bimetal components distort. 4. Resistor circuit is opened	Repair Replace Replace Replace

XIV Speedometer

Fault	Reasons	Remedy
Wrong indication	1. The driving or driven gear of speedometer is damaged. 2. Flexible shaft is faulty. 3. Flexible shaft and speedometer joint is not good. 4. Speedometer is faulty.	Replace Replace Repair Repair or replace
Speedometer emits noise	1. Soft lubricating oil is not good or damaged. 2. Gear oil within transmission is deficient	Lubricate or replace Supplement

XV. Water thermometer

Fault	Reasons	Remedy
Wrong indication	1. Connector is loose. 2. Water temperature sensor is faulty. 3. Water thermometer is faulty.	Repair Replace Replace
No indication	1.Water thermometer circuit is opened. 2.Water temperature sensor is faulty. 3. Water thermometer is faulty.	Repair Replace Replace

https://truckmanualshub.com/

XVI. Engine oil pressure warning lamp

Fault	Reasons	Remedy
Warning light is not bright when ignition switch is put in the ON position (engine is not started), warning light is not bright).	1. Fuse is blown. 2. Lamp is damaged. 3. Circuit is cut off. 4. Engine oil pressure sensor is damaged.	Replace Replace Repair Replace
After engine is started, warning light doesn't put out.	1. Oil under pan is lack of oil. 2. Engine oil pressure is too low 3. Sensor is damaged.	Supplement Repair Replace

XVII. Charge indicator light

Fault	Reasons	Remedy
Warning light is not bright when ignition switch is put in the ON position (engine is not started), warning light is not bright).	1. Fuse is blown. 2. Lamp is damaged. 3. Circuit is cut off. 4. Regulator is faulty.	Replace Replace Repair Repair
After engine is started, warning light doesn't put out.	1. Motor belt is loose. 2. Regulator is faulty. 3. Motor is faulty.	Repair Repair Repair

XVIII. Horn

Fault	Reasons	Remedy
Horn does not emit sound.	1. Fuse is blown. 2. Connector is loose. 3. Pull button ground is not good. 4. Horn is damaged. 5. Relay is loose or damaged.	Replace Repair Repair Replace Repair or replace
Sound quality is not good.	1. Horn pull button contact is not complete, resistance increases. 2. Horn inside contactor gap is incorrect or contactor is damaged. 3. Membrane has crack.	Repair Adjust or replace Replace

https://truckmanualshub.com/

XIX. Turn indicator light

Fault	Reasons	Remedy
Left and right indicator lights both are not bright, or do not flash.	1. Fuse is blown. 2. Connector is loose. 3. Flasher is faulty. 4. The rated power of used lamp is lower than specific value.	Replace Repair Repair or replace Replace
Flash frequency is high only on one side, or flash only occurs on one side.	1. Lamp ground is not good. 2. Bulbs on high frequency side are damaged. 3. Flash relay frequency is over high. 4. Turn switch contact is not good.	Repair Replace Repair or replace Repair or replace
Flash frequency is over low.	1. The rated power of used lamps is lower than specific value. 2. Lamp ground is not good. 3. Power voltage is too low. 4. Connector is loose. 5. Flash relay frequency is over low.	Replace Repair Charge Repair Repair or replace

XX. Lighting lamp

Fault	Reasons	Remedy
When lighting switch in combination switch is turned to gear 1, fuse is blown.	1. License light wire ground connection is short. 2. Circuit connecting switch inside with shell is short.	Repair Repair or replace
When lighting switch in combination switch is turned to gear 1, lighting lamp is not bright.	1. Fuse is blown. 2. Connector is loose. 3. Lead wire is opened. 4. Bulbs are broken. 5. Relay is loose or damaged.	Replace Repair Repair Replace Repair or replace
When lighting switch in combination switch is turned to gear 2, fuse is blown.	1. Circuit connecting switch inside with shell is short. 2. The electric equipment or wire in headlamp circuit is short.	Repair or replace Repair
Headlamp beam is not changed.	1. Bulbs are broken. 2. Dimming switch is damaged.	Replace Replace

https://truckmanualshub.com/

Tool set

No.	Content
1	Tool bag
2	Open-ended spanner 8 ×10
3	Open-ended spanner 12×14
4	Open-ended spanner 13 ×16
5	Dual-purpose screwdriver
6	Screwdriver handle
7	Slip joint pliers
8	Socket wrench for spark plug
9	Shank—spark plug socket wrench
10	Square-head spanner
11	Wheel spanner
12	Jack
13	Jack handle