https://truckmanualshub.com/

odb Oil Cooled Disc Brake

ISO 9001 ISO14001

DOOSAN

Electric Powered Forklifts

B15T / B18T / B20T - 5

Capacity Range 3,000 to 4,000lb 3 Wheel

B16X / B18X / B20X - 5

Capacity Range 3,000 to 4,000lb 4 Wheel

PRO 5 SERIES

B15T / B18T / B20T - 5
Capacity Range 3,000 - 4,000lb 3 Wheel

B16X / B18X / B20X - 5
Capacity Range 3,000 - 4,000lb 4 Wheel

Full Product Line

Doosan offers a full line of lift trucks from 3,000lb(1,500kg) to 36,000lb(16,000kg) pounds to fill all your material handling needs. Contact your dealer for specific information on our various models and configurations.

Complete Distribution Network

Doosan lift trucks are sold and serviced by 95 dealers at over 200 locations in the U.S and Canada.
Call us at 1-800-323-9662 for the location of a dealer near you, or visit us at
www.doosanlift.com

For corporate information go to :
www.dhiac.com

PSC0812A4(July.2011)

DOOSAN

Doosan Industrial Vehicle America Corp.
2905 Shawnee Industrial Parkway,
Suwanee,GA 30024 U.S.A.
Tel : 770-831-2200
Fax : 770-831-2250

AUTHORIZED DEALER

Product and specifications are subject to improvement and change without notice.

https://truckmanualshub.com/

B15T / B18T / B20T
B16X / B18X / B20X
New Electric Powered Forklifts

innovative thinking... in-the-iron

Taking the industry lead...

Doosan design breakthrough takes AC technology a leap beyond conventional forklifts by introducing revolutionary AC power and efficiency to both drive and hydraulic motors taking the industry lead in electric truck design and performance.

We've designed this new generation of Doosan electrics to be STRONG, SAFE, STABLE, SMART and STYLISH.

Our customers can be confident that their material handling needs will be met and even surpassed in one compact, productive and efficient package with our new electric powered forklifts.

Our design team has integrated the advances of AC technology with user defined comfort and performance needs generated from extensive marketplace research - resulting in a new electric truck that excels in **Performance, Practicality & Production.**

The **PRO 5** Series provides a complete package of AC technological advances in the **Drive, Hydraulic** and **Steering** systems. This combination goes beyond the typical AC drive Motor only configuration found on other makes, to maximize benefits both on the production floor and to your bottom line!

ac power
Productivity Comes Standard

DRIVE THE DIFFERENCE...

Doosan AC Drive & Hydraulic technology

...enhances your investment in equipment, personnel & efficiency

How do you keep your Purchasing, Production & Accounting departments happy?

The **PRO 5** Series will do just that and more with :

- Operator compartment design that optimizes driver comfort to keep your operator fresh, effective and productive... all day, everyday.
- AC Drive & Hydraulic motors promote energy efficiency that generates more run time per battery charge for greater productivity and increased efficiency.
- Elimination of motor brushes, commutators and directional and hydraulic contactors decreases maintenance and minimizes downtime, to reduce overall operating costs.

DOOSAN PRO 5 SERIES with Active Control Technology. Performance, Energy, Safety and Operator Comfort

ACT
Active Control Technology

DRIVE DOOSAN !

https://truckmanualshub.com/

from front to back...the new PRO 5 Series will satisfy the most demanding owners & operators.

PRO 5 SERIES

OWNERS
...want a lift truck that makes good economic sense.

OPERATORS
...want a lift truck that is both comfortable & productive.

ALL OF THEIR NEEDS ARE MET BY THE PRO5 SERIES!!

1. Rear View Mirrors
Keep operators posted, aware and alert to what's going on around them.

2. Lockable Parking Brake Lever with Warning
Double-acting lever actuation with button release keeps truck braked while exiting and entering vehicle. Buzzer activates when operator leaves seat without engaging park brake.

3. Directional Lever
Hand actuated to easily select forward or reverse for smooth and responsive directional change.

4. Seat Belt Indicator
Activates as a warning if seat belt is not fastened when truck is in operating mode.

5. Fully Hydraulic Power Steering
Has no mechanical connection between steering wheel and steer axle which eliminates kickback and gives operator precise steering control with low steering effort regardless of truck speed.

6. Roomy Operator Compartment
Designed for comfort. Optimized pedal positions, combined with an infinitely tiltable steering wheel and full slide seat adjustment effectively eliminates operator fatigue.

7. Outstanding Visibility
Achieved with SEE-THRU mast and overhead guard with a low rise cowl design that optimizes operator sight lines forward, up and to the load.

8. Breakthrough Anisometric Overhead Guard
Revolutionary design permits quick and easy installation of weather panels when and where they are needed.

9. Audible Back-up Buzzer
To alert pedestrian traffic of vehicle proximity and location.

10.Tool-less Battery Side Covers
Enhance stylish appearance and permits convenient & open service access.

Maximized forward Visibility

Repositioned hydraulic hoses, sheave and pipes provide clear visibility through the mast. All auxiliary hoses for attachments are aligned behind mast chain and cylinders.

Optional Mono-Ped Foot Directional Control permits hands free directional changes while maintaining full control of other operating functions.

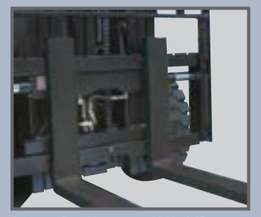

Integral or Hang-on Sideshifter makes load positioning quick and easy for superior material handling efficiency.

Multi-functional Convenience Tray provides cup holder, paperwork clip and storage tray to keep operator organized, efficient and effective.

Electric sensor in brake oil reservoir advises when fluid refill is needed.

Optional Finger-Tip actuated hydraulic valve controls permit precise controlled load movement by literally lifting only a finger to significantly reduce operator movement and expended effort.

Optional Equipment Deluxe Suspension Seat smooths out road bumps and operating jolts.

OIL - COOLED DISC BRAKES

Oil-Cooled Disc Brakes as standard equipment eliminates outside contamination to significantly extend brake life and dramatically decrease maintenance costs. These brakes have service intervals 5-times longer than conventional shoe brakes and come with Doosan INDUSTRY EXCLUSIVE FEATURES.

DRIVE THE DIFFERENCE...

DRIVE DOOSAN !

https://truckmanualshub.com/

Productivity... is standard equipment!

The ultimate judge of any Lift Truck is its productivity and that's where Doosan AC CONTROL SYSTEM really shines!

AGGRESSIVE ACCELERATION
+
PRECISE CONTROL
+
RUN TIME PER BATTERY CHARGE

=PRODUCTIVITY

With just the touch of a button, operators can select the performance mode that best meets their production needs.

E-Mode(Economy)
Maximizes energy savings for over 8-hours operation on a battery charge.

S-Mode (Standard)
Performance equivalent to DC motor powered vehicles.

H-Mode (High Speed)
Maximum drive & lift speeds.

And thanks to our closed-loop speed feedback system, the ITC (Intelligent Torque Control) continuously monitors loads on the traction and hydraulic motors to maintain equivalent operating speeds whether truck is loaded or unloaded. This allows the operator to optimize operational efficiencies thereby maximizing the productivity equation.

AC MOTORS
...control Drive Hydraulic and Steering functions. Utilizes 3 inverters to convert current in the truck battery to smooth, precise and productive operation. Hydraulic motor and twin drive motors are brushless making them virtually maintenance free.

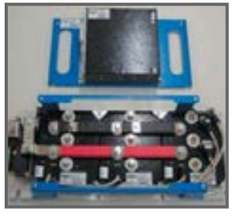

AC CONTROLLER
...consists of 3 independent power modules directly linked to drive, hydraulic and steering functions with a main logic controller board that manages, directs and monitors every operating system on the truck. Permits programmable adjustments to operating functions for customized truck performance. Provides both run-time and trouble shooting diagnostic capability.

Intelligent Instrument and Control Panels ...at the head of the class!

The combination of LED displays and 7-digit graphic LCD display intelligently provides operators with all the information they need, including operational information, diagnostics, and programmable settings. The 4 display buttons offers a choice of four power modes; heavy duty, standard duty, economic duty and slow travel speed mode. Standard instrument images are displayed at the right.

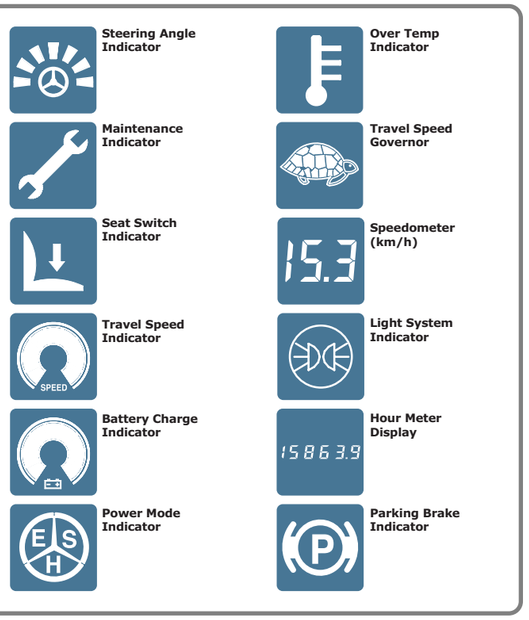

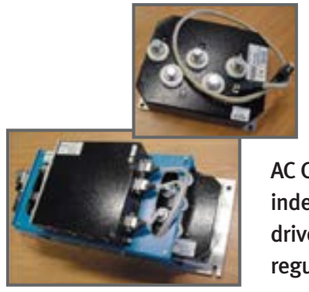

AC CONTROLLER

The Command Center of the **PRO 5** Series is our AC Controller consisting of a main logic board and three independent power modules with direct links to each drive motor and the hydraulic motor. This control unit regulates and monitors the following functions :

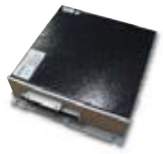

- ✓ Anti-Roll Back and Anti-Roll Down with adjustable ramp stop time
- ✓ Regenerative Braking
- ✓ Electrically Assisted Braking
- ✓ Static Return to Off (SRO)
- ✓ Drive Speed Compensation (Load/Unload)
- ✓ Drive Speed Acceleration/Deceleration/Reduction
- ✓ Continuous Lift Speed Control/ Pump Motor Speed Compensation
- ✓ Battery Discharge Indicator with Adjustable Reset Value
- ✓ Over Temperature Protection for power modules and Motors
- ✓ Low and High Voltage Limit
- ✓ Diagnostics and Stored Error Codes
- ✓ Power Line Fault Detection (Fuse/Contactor)
- ✓ Continuous Temperature Measuring (Controller, Motor)
- ✓ Full Protection against Short or Open Circuits

https://truckmanualshub.com/

Electric Powered Forklifts

B15T / B18T / B20T - 5

Capacity Range 3000 - 4000lb 3 Wheel, 36 and 48 volt

PRO 5 SERIES

https://truckmanualshub.com/

SPECIFICATIONS(36V AC TRUCK)

CHARACTERISTICS	2	Model			B15T	B18T	B20T
	3	Load Capacity	at rated load center	lb(kg)	3000(1500)	3500(1750)	4000(2000)
	4	Load Center		in(mm)	24(500)	24(500)	24(500)
	5	Power Type			Electric	Electric	Electric
	6	Operator Type			Driver Seated	Driver Seated	Driver Seated
	7	Tire Type	E : Solid Soft, C : Cushion		E, C	E, C	E, C
	8	Wheels (x=Driven)			2x / 2	2x / 2	2x / 2
DIMENSIONS	9	Max. Fork Height	with STD 2-stage mast	in(mm)	130(3300)	130(3300)	130(3300)
	10	Free Lift		in(mm)	5.1(130)	5.1(130)	5.3(135)
	12	Fork Carriage	ISO Class		II	II	II
	13	Forks	Thickness×Width×Length	in(mm)	1.4×3.9×41.3 (35×100×1050)	1.4×3.9×41.3 (35×100×1050)	1.6×3.9×41.3 (40×100×1050)
			Fork Spacing(Min / Max)	in(mm)	9.5×35.6(240×905)	9.5×35.6(240×905)	9.5×35.6(240×905)
	14	Tilt of Mast	Forward / Backward	deg	5 / 7	5 / 7	5 / 7
	15	Overall Dimensions	Length to Fork Face	in(mm)	73.5(1868)	78.8(2001)	79.0(2006)
	16		Overall Width	in(mm)	42.9(1090)	42.9(1090)	42.9(1090)
	17		Mast Lowered Height	in(mm)	78.7(2000)	78.7(2000)	78.7(2000)
	18		Mast Extended Height	in(mm)	159.3(4045)	159.3(4045)	159.4(4050)
	19		Overhead Guard Height	in(mm)	83.5(2120)	83.5(2120)	83.5(2120)
	20		Seat Height	in(mm)	36.2(919)	36.2(919)	36.2(919)
	21	Turning Radius	Minimum outside	in(mm)	58.7(1492)	64.0(1625)	64.0(1625)
	22	Load Moment Center		in(mm)	14.8(376)	14.8(376)	15.0(381)
	23	Right Angle Stacking Aisle Width With Pallets 32in×48in / 40in×48in[L×W]		in(mm)	139.6 / 125.7 (3318 / 3194)	135.9 / 131 (3451 / 3327)	136 / 131.2 (3456 / 3332)
PERFOR MANCE	24	Speed	Travel, Loaded / Unloaded	mph(km/h)	8.7/8.7(14.0 / 14.0)	8.7/8.7(14.0 / 14.0)	8.7/8.7(14.0 / 14.0)
	25		Lifting, Loaded / Unloaded	fpm(mm/s)	61/108(310 / 550)	61/108(310 / 550)	61/108(310 / 550)
	26		Lowering, Loaded / Unloaded	fpm(mm/s)	98/88(500 / 450)	98/88(500 / 450)	98/88(500 / 450)
	28	Max, Drawbar Pull	Loaded	lb(kg)	2733(1240)	2734(1240)	2734(1240)
	30	Max, Gradeability	at 1.6 km/h, Loaded	%	24	23	22
WEI GHT	32	Total Weight	With minimum weight of battery	lb(kg)	7024(3186)	7297(3310)	8084(3667)
	33	Axle Load, Loaded	Front / Rear	lb(kg)	9021 / 1310(4092 / 594)	9844 / 1312(4465 / 595)	11028 / 1466(5002 / 665)
	34	Axle Load, Unloaded	Front / Rear	lb(kg)	3450 / 2574(1565 / 1621)	3596 / 3702(1631 / 1679)	3869 / 4215(1755 / 1912)
CHASSIS	35	Tires	Number of wheels (Front / Rear)		2 / 2	2 / 2	2 / 2
	36		Size, Front		18×7×12.12	18×7×12.12	18×7×12.12
	37		Size, Rear		15×6×11.25	15×6×11.25	15×6×11.25
	38	Wheel Base	Distance	in(mm)	49.8(1264)	55(1397)	55(1397)
	39	Tread Width	Front	in(mm)	35.5(902)	35.5(902)	35.5(902)
			Rear	in(mm)	7.8(198)	7.8(198)	7.8(198)
	40	Ground Clearance	Loaded at lowest	in(mm)	3.4(86)	3.4(86)	3.4(86)
	41		Loaded at center of wheelbase	in(mm)	3.9(100)	3.9(100)	3.9(100)
	42	Brakes	Service		Hydraulic	Hydraulic	Hydraulic
	43		Parking		Mechanical	Mechanical	Mechanical
POWER TRAIN	45	Battery	Type		Lead-acid	Lead-acid	Lead-acid
			Voltage / Capacity(Max)	V/AH	36 / 880	36 / 1100	36 / 1100
			Compartment Length	in(mm)	20.8(528)	25(636)	25(636)
			Compartment Width	in(mm)	39.1(992)	39.1(992)	39.1(992)
			Compartment Height	in(mm)	26.8(680)	26.8(680)	26.8(680)
			Minimum Weight	lb(kg)	1543(700)	1764(800)	2315(1050)
	47	Electric Motors	Drive Motor - 1Hour Rating	hp(kW)	6.7(5.0)×2	6.7(5.0)×2	6.7(5.0)×2
	48		Hydraulic Motor - 20% Duty	hp(kW)	16(12)	16(12)	16(12)
	54	Control Type		type	MOSFET Inverter	MOSFET Inverter	MOSFET Inverter
	55	Transfer	Brake Type	type	ODB	ODB	ODB
	57	Relief Pressure	Lift	psi(kpa)	2870(19800)	2870(19800)	3125(21550)
			Attachment	psi(kpa)	2030(14000)	2030(14000)	2030(14000)

Dimensional drawings

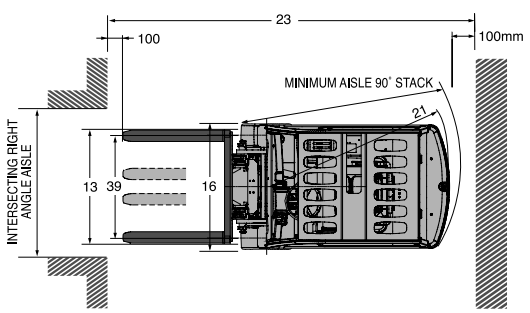

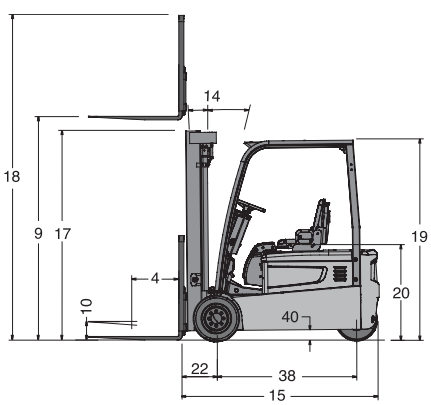

https://truckmanualshub.com/

SPECIFICATIONS(48V AC TRUCK)

CHARACTERISTICS	2	Model			B15T	B18T	B20T
	3	Load Capacity	at rated load center	lb(kg)	3000(1500)	3500(1750)	4000(2000)
	4	Load Center		in(mm)	24(500)	24(500)	24(500)
	5	Power Type			Electric	Electric	Electric
	6	Operator Type			Driver Seated	Driver Seated	Driver Seated
	7	Tire Type	E : Solid Soft, C : Cushion		E, C	E, C	E, C
	8	Wheels (x=Driven)			2x / 2	2x / 2	2x / 2
DIMENSIONS	9	Max. Fork Height	with STD 2-stage mast	in(mm)	130(3300)	130(3300)	130(3300)
	10	Free Lift		in(mm)	5.1(130)	5.1(130)	5.3(135)
	12	Fork Carriage	ISO Class		II	II	II
	13	Forks	Thickness×Width×Length	in(mm)	1.4×3.9×35.4 (35×100×900)	1.4×3.9×35.4 (35×100×900)	1.6×3.9×35.4 (40×100×900)
			Fork Spacing(Min / Max)	in(mm)	9.5×35.6(240×905)	9.5×35.6(240×905)	9.5×35.6(240×905)
	14	Tilt of Mast	Forward / Backward	deg	5 / 7	5 / 7	5 / 7
	15	Overall Dimensions	Length to Fork Face	in(mm)	73.5(1868)	78.8(2001)	79.0(2006)
	16		Overall Width	in(mm)	42.9(1090)	42.9(1090)	42.9(1090)
	17		Mast Lowered Height	in(mm)	84.6(2150)	84.6(2150)	84.6(2150)
	18		Mast Extended Height	in(mm)	4345(171.1)	4345(171.1)	4350(171.3)
	19		Overhead Guard Height	in(mm)	83.4(2118)	83.4(2118)	83.4(2118)
	20		Seat Height	in(mm)	919(36.2)	919(36.2)	919(36.2)
	21	Turning Radius	Minimum outside	in(mm)	58.7(1492)	64.0(1625)	64.0(1625)
	22	Load Moment Center		in(mm)	14.8(376)	14.8(376)	15.0(381)
	23	Right Angle Stacking Aisle Width With Pallets 32in×48in / 40in×48in[L×W]		in(mm)	139.6 / 125.7 (3318 / 3194)	135.9 / 131 (3451 / 3327)	136 / 131.2 (3456 / 3332)
PERFOR MANCE	24	Speed	Travel, Loaded / Unloaded	mph(km/h)	10.6 / 10.6(17.0 / 17.0)	10.6 / 10.6(17.0 / 17.0)	10.6 / 10.6(17.0 / 17.0)
	25		Lifting, Loaded / Unloaded	fpm(mm/s)	78.7 / 118.1(400 / 600)	78.7 / 118.1(400 / 600)	78.7 / 118.1(400 / 600)
	26		Lowering, Loaded / Unloaded	fpm(mm/s)	98 / 88(500 / 450)	98 / 88(500 / 450)	98 / 88(500 / 450)
	28	Max, Drawbar Pull	Loaded	lb(kg)	2866(1300)	2866(1300)	2866(1300)
	30	Max, Gradeability	at 1.6 km/h, Loaded	%	26	25	24
WEI GHT	32	Total Weight	with minimum weight of battery	lb(kg)	6859(3111)	7134(3236)	7932(3598)
	33	Axle Load, Loaded	Front / Rear	lb(kg)	8938 / 1228(4054 / 557)	9760 / 1232(4427 / 559)	10955 / 1387(4969 / 629)
	34	Axle Load, Unloaded	Front / Rear	lb(kg)	3364 / 3494(1526 / 1585)	3510 / 3634(1592 / 1644)	3796 / 4136(1722 / 1876)
CHASSIS	35	Tires	Number of wheels (Front / Rear)		2 / 2	2 / 2	2 / 2
	36		Size, Front		18×7-8	18×7-8	200×50-10
	37		Size, Rear		15×4.5-8	15×4.5-8	16×6-8
	38	Wheel Base	Distance	in(mm)	49.8(1264)	55(1397)	55(1397)
	39	Tread Width	Front	in(mm)	35.5(902)	35.5(902)	35.5(902)
			Rear	in(mm)	6.6(167)	6.6(167)	7.9(201)
	40	Ground Clearance	Loaded at lowest	in(mm)	3.4(86)	3.4(86)	3.4(86)
	41		Loaded at center of wheelbase	in(mm)	3.9(100)	3.9(100)	3.9(100)
	42	Brakes	Service		Hydraulic	Hydraulic	Hydraulic
	43		Parking		Mechanical	Mechanical	Mechanical
POWER TRAIN	45	Battery	Type		Lead-acid	Lead-acid	Lead-acid
			Voltage / Capacity(Max)	V/AH	48 / 440	48 / 510	48 / 585
			Compartment Length	in(mm)	20.8(528)	25(636)	25(636)
			Compartment Width	in(mm)	39.1(992)	39.1(992)	39.1(992)
			Compartment Height	in(mm)	26.8(680)	26.8(680)	26.8(680)
			Minimum Weight	lb(kg)	1543(700)	1764(800)	2315(1050)
	47	Electric Motors	Drive Motor - 1Hour Rating	hp(kW)	6.7(5.0)×2	6.7(5.0)×2	6.7(5.0)×2
	48		Hydraulic Motor - 20% Duty	hp(kW)	20.1(15)	20.1(15)	20.1(15)
	54	Control Type		type	MOSFET Inverter	MOSFET Inverter	MOSFET Inverter
	55	Transfer	Brake Type	type	ODB	ODB	ODB
	57	Relief Pressure	Lift	psi(kpa)	2550(17600)	2870(19800)	3125(21550)
			Attachment	psi(kpa)	2030(14000)	2030(14000)	2030(14000)

3,000 ~ 4,000lb (1,500 ~ 2,000kg) 3 Wheel Electric Powered Lift Trucks

■LOAD CAPACITY CHART

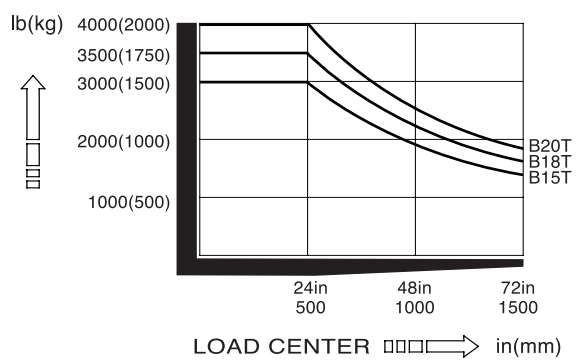

■Standard equipment

36 Volt or 48 Volt electric chassis with AC system
Battery connector
Tires
3-section valves with 2-levers
Seat
130in(3300mm) STD 2-stage mast
Without battery & charger
Tilt cylinder (5 deg.fwd/7 deg.bwd)
Carriage
Load backrest
35.4in(900mm) fork

■A standard chassis includes :

36 Volt or 48 Volt electric system
Oil-cooled Disc Brake
Power steering
AC(Alternating Current) control panel
Tilt steering wheel
2 Front flood lights
DC/DC converter

https://truckmanualshub.com/

MAST SPECIFICATIONS

B15T (36V / 48V)

Mast Type	Maximum Fork Height		Fully Lowered Height		Fully Extended Height				Free Lift				Solid Soft Tire				Cushion Tire			
					With Load Backrest		W/O Load Backrest		With Load Backrest		W/O Load Backrest		Tilt Angle		Load Capacities		Tilt Angle		Load Capacities	
													FWD	BWD	LC24in	LC500mm	FWD	BWD	LC24in	LC500mm
	in	mm	in	mm	in	mm	in	mm	in	mm	in	mm	deg	deg	lb	kg	deg	deg	lb	kg
STD	118	3000	78.7	2000	159.3	4045	141.7	3600	5.1	130	5.1	130	5	7	3000	1500	5	7	3000	1500
STD	130	3300	84.6	2150	171.1	4345	153.5	3900	5.1	130	5.1	130	5	7	3000	1500	5	7	3000	1500
STD	138	3500	88.6	2250	178.9	4545	161.4	4100	5.1	130	5.1	130	5	7	3000	1500	5	7	3000	1500
STD	146	3700	92.5	2350	186.8	4745	169.3	4300	5.1	130	5.1	130	5	7	3000	1500	5	7	3000	1500
STD	157	4000	100.4	2550	198.6	5045	181.1	4600	5.1	130	5.1	130	5	7	2950	1500	5	7	3000	1500
STD	177	4500	110.2	2800	218.3	5545	200.8	5100	5.1	130	5.1	130	5	7	2850	1425	5	7	2900	1450
FF	106	2700	72.8	1850	147.4	3745	130.9	3325	33.3	845	49.8	1265	5	5	3000	1500	5	5	3000	1500
FF	118	3000	78.7	2000	159.3	4045	142.7	3625	39.2	995	55.7	1415	5	5	3000	1500	5	5	3000	1500
FF	130	3300	84.6	2150	171.1	4345	154.5	3925	45.1	1145	61.6	1565	5	5	3000	1500	5	5	3000	1500
FFT	157	4000	74.0	1880	198.8	5050	182.3	4630	34.4	875	51.0	1295	5	5	2900	1450	5	5	2950	1475
FFT	177	4500	80.5	2045	218.3	5545	201.8	5125	40.9	1040	57.5	1460	5	5	2800	1400	5	5	2850	1425
FFT	187	4750	83.9	2130	228.1	5795	211.6	5375	44.3	1125	60.8	1545	5	5	2700	1350	5	5	2750	1375
FFT	197	5000	88.4	2245	238.0	6045	221.5	5625	48.8	1240	65.4	1660	5	5	2600	1300	5	5	2700	1350
FFT	217	5500	97.6	2480	257.9	6550	241.3	6130	58.1	1475	74.6	1895	5	5	1850	975	5	5	2550	1275
FFT	236	6000	104.1	2645	277.4	7045	260.8	6625	64.6	1640	81.1	2060	5	5	1200	650	5	5	2450	1225

B18T (36V / 48V)

Mast Type	Maximum Fork Height		Fully Lowered Height		Fully Extended Height				Free Lift				Solid Soft Tire				Cushion Tire			
					With Load Backrest		W/O Load Backrest		With Load Backrest		W/O Load Backrest		Tilt Angle		Load Capacities		Tilt Angle		Load Capacities	
													FWD	BWD	LC24in	LC500mm	FWD	BWD	LC24in	LC500mm
	in	mm	in	mm	in	mm	in	mm	in	mm	in	mm	deg	deg	lb	kg	deg	deg	lb	kg
STD	118	3000	78.7	2000	159.3	4045	141.7	3600	5.1	130	5.1	130	5	7	3500	1750	5	7	3500	1750
STD	130	3300	84.6	2150	171.1	4345	153.5	3900	5.1	130	5.1	130	5	7	3500	1750	5	7	3500	1750
STD	138	3500	88.6	2250	178.9	4545	161.4	4100	5.1	130	5.1	130	5	7	3500	1750	5	7	3500	1750
STD	146	3700	92.5	2350	186.8	4745	169.3	4300	5.1	130	5.1	130	5	7	3500	1750	5	7	3500	1750
STD	157	4000	100.4	2550	198.6	5045	181.1	4600	5.1	130	5.1	130	5	7	3500	1750	5	7	3500	1750
STD	177	4500	110.2	2800	218.3	5545	200.8	5100	5.1	130	5.1	130	5	7	3300	1650	5	7	3300	1650
FF	106	2700	72.8	1850	147.4	3745	130.9	3325	33.3	845	49.8	1265	5	5	3500	1750	5	5	3500	1750
FF	118	3000	78.7	2000	159.3	4045	142.7	3625	39.2	995	55.7	1415	5	5	3500	1750	5	5	3500	1750
FF	130	3300	84.6	2150	171.1	4345	154.5	3925	45.1	1145	61.6	1565	5	5	3500	1750	5	5	3500	1750
FFT	157	4000	74.0	1880	198.8	5050	182.3	4630	34.4	875	51.0	1295	5	5	3350	1700	5	5	3400	1700
FFT	177	4500	80.5	2045	218.3	5545	201.8	5125	40.9	1040	57.5	1460	5	5	3200	1650	5	5	3300	1650
FFT	187	4750	83.9	2130	228.1	5795	211.6	5375	44.3	1125	60.8	1545	5	3	3150	1575	5	5	3200	1625
FFT	197	5000	88.4	2245	238.0	6045	221.5	5625	48.8	1240	65.4	1660	5	3	3050	1525	5	5	3150	1575
FFT	217	5500	97.6	2480	257.9	6550	241.3	6130	58.1	1475	74.6	1895	5	3	2400	1250	5	5	3000	1500
FFT	236	6000	104.1	2645	277.4	7045	260.8	6625	64.6	1640	81.1	2060	5	3	1650	875	5	5	2800	1400

B20T (36V / 48V)

Mast Type	Maximum Fork Height		Fully Lowered Height		Fully Extended Height				Free Lift				Solid Soft Tire				Cushion Tire			
					With Load Backrest		W/O Load Backrest		With Load Backrest		W/O Load Backrest		Tilt Angle		Load Capacities		Tilt Angle		Load Capacities	
													FWD	BWD	LC24in	LC500mm	FWD	BWD	LC24in	LC500mm
	in	mm	in	mm	in	mm	in	mm	in	mm	in	mm	deg	deg	lb	kg	deg	deg	lb	kg
STD	118	3000	78.7	2000	159.4	4050	141.9	3605	5.3	135	5.3	135	5	7	4000	2000	5	7	4000	2000
STD	130	3300	84.6	2150	171.3	4350	153.7	3905	5.3	135	5.3	135	5	7	4000	2000	5	7	4000	2000
STD	138	3500	88.6	2250	179.1	4550	161.6	4105	5.3	135	5.3	135	5	7	4000	2000	5	7	4000	2000
STD	146	3700	92.5	2350	187.0	4750	169.5	4305	5.3	135	5.3	135	5	7	4000	2000	5	7	4000	2000
STD	157	4000	100.4	2550	198.8	5050	181.3	4605	5.3	135	5.3	135	5	7	4000	2000	5	7	4000	2000
STD	177	4500	110.2	2800	218.5	5550	201.0	5105	5.3	135	5.3	135	5	7	3900	1950	5	7	4000	2000
FF	106	2700	72.8	1850	147.6	3750	131.1	3330	33.3	845	49.8	1265	5	5	4000	2000	5	5	4000	2000
FF	118	3000	78.7	2000	159.4	4050	142.9	3630	39.2	995	55.7	1415	5	5	4000	2000	5	5	4000	2000
FF	130	3300	84.6	2150	171.3	4350	154.7	3930	45.1	1145	61.6	1565	5	5	4000	2000	5	5	4000	2000
FFT	157	4000	74.0	1880	199.0	5055	182.5	4635	34.4	875	51.0	1295	5	5	3900	1950	5	5	4000	2000
FFT	177	4500	80.5	2045	218.5	5550	202.0	5130	40.9	1040	57.5	1460	5	5	3750	1875	5	5	3950	1975
FFT	187	4750	83.9	2130	228.3	5800	211.8	5380	44.3	1125	60.8	1545	5	5	3650	1825	5	5	3850	1925
FFT	197	5000	88.4	2245	238.2	6050	221.7	5630	48.8	1240	65.4	1660	5	5	3600	1800	5	5	3800	1900
FFT	217	5500	97.6	2480	258.1	6555	241.5	6135	58.1	1475	74.6	1895	5	5	3400	1700	5	5	3600	1800
FFT	236	6000	104.1	2645	277.6	7050	261.0	6630	64.6	1640	81.1	2060	5	5	3150	1575	5	5	3150	1500

Note : These load capacities are based on the standard chassis without side shifter.

Specification values quoted in this catalog have been rounded.
DOOSAN products and specifications are subject to improvement and change without notice.
Performance may vary due to operating conditions.
The performance shown represents nominal values obtained under typical operating conditions.

PSC0812A4(July.2011)

Doosan Industrial Vehicle America Corp.
2905 Shawnee Industrial Parkway,
Suwanee,GA 30024 U.S.A.
Tel : 770-831-2200
Fax : 770-831-2250

AUTHORIZED DEALER

https://truckmanualshub.com/

Electric Powered Forklifts

Capacity Range 3,000 - 4,000lb 4 Wheel

B16X - 5
B18X - 5
B20X - 5

MAST SPECIFICATIONS AND RATED CAPACITIES

Truck Model	Mast Type	Maximum Fork Height		Fully Lowered Height		Fully Extended Height				Free Lift				Solid Soft Tire		
						With Load Backrest		W/O Load Backrest		With Load Backrest		W/O Load Backrest		Tilt Angle	Load Capacities	
														FWD/BWD	LC24in	LC500m
		in	mm	in	mm	in	mm	in	mm	in	mm	in	mm	deg	lb	kg
B16X	STD	118	3000	78.7	2000	159.3	4045	141.7	3600	5.1	130	5.1	130	7 / 7	3200	1600
	STD	130	3300	84.6	2150	171.1	4345	153.5	3900	5.1	130	5.1	130	7 / 7	3200	1600
	STD	138	3500	88.6	2250	178.9	4545	161.4	4100	5.1	130	5.1	130	7 / 7	3200	1600
	STD	146	3700	92.5	2350	186.8	4745	169.3	4300	5.1	130	5.1	130	7 / 7	3200	1600
	STD	157	4000	100.4	2550	198.6	5045	181.1	4600	5.1	130	5.1	130	7 / 7	3200	1600
	STD	177	4500	110.2	2800	218.3	5545	200.8	5100	5.1	130	5.1	130	7 / 7	3200	1600
	FF	106	2700	72.8	1850	147.4	3745	130.9	3325	33.3	845	49.8	1265	5 / 5	3200	1600
	FF	118	3000	78.7	2000	159.3	4045	142.7	3625	39.2	995	55.7	1415	5 / 5	3200	1600
	FF	130	3300	84.6	2150	171.1	4345	154.5	3925	45.1	1145	61.6	1565	5 / 5	3200	1600
	FFT	157	4000	74.0	1880	198.8	5050	182.3	4630	34.4	875	51.0	1295	5 / 5	3200	1600
	FFT	177	4500	80.5	2045	218.3	5545	201.8	5125	40.9	1040	57.5	1460	5 / 5	3100	1550
	FFT	187	4750	83.9	2130	228.1	5795	211.6	5375	44.3	1125	60.8	1545	5 / 5	3000	1500
	FFT	197	5000	88.4	2245	238.0	6045	221.5	5625	48.8	1240	65.4	1660	5 / 5	2900	1450
	FFT	217	5500	97.6	2480	257.9	6550	241.3	6130	58.1	1475	74.6	1895	5 / 5	2700	1350
	FFT	236	6000	104.1	2645	277.4	7045	260.8	6625	64.6	1640	81.1	2060	5 / 5	2450	1250
B18X	STD	118	3000	78.7	2000	159.3	4045	141.7	3600	5.1	130	5.1	130	5 / 7	3600	1800
	STD	130	3300	84.6	2150	171.1	4345	153.5	3900	5.1	130	5.1	130	5 / 7	3600	1800
	STD	138	3500	88.6	2250	178.9	4545	161.4	4100	5.1	130	5.1	130	5 / 7	3600	1800
	STD	146	3700	92.5	2350	186.8	4745	169.3	4300	5.1	130	5.1	130	5 / 7	3600	1800
	STD	157	4000	100.4	2550	198.6	5045	181.1	4600	5.1	130	5.1	130	5 / 7	3600	1800
	STD	177	4500	110.2	2800	218.3	5545	200.8	5100	5.1	130	5.1	130	5 / 7	3400	1700
	FF	106	2700	72.8	1850	147.4	3745	130.9	3325	33.3	845	49.8	1265	5 / 5	3600	1800
	FF	118	3000	78.7	2000	159.3	4045	142.7	3625	39.2	995	55.7	1415	5 / 5	3600	1800
	FF	130	3300	84.6	2150	171.1	4345	154.5	3925	45.1	1145	61.6	1565	5 / 5	3600	1800
	FFT	157	4000	74.0	1880	198.8	5050	182.3	4630	34.4	875	51.0	1295	5 / 5	3600	1800
	FFT	177	4500	80.5	2045	218.3	5545	201.8	5125	40.9	1040	57.5	1460	5 / 5	3500	1750
	FFT	187	4750	83.9	2130	228.1	5795	211.6	5375	44.3	1125	60.8	1545	5 / 5	3200	1600
	FFT	197	5000	88.4	2245	238.0	6045	221.5	5625	48.8	1240	65.4	1660	5 / 5	3150	1550
	FFT	217	5500	97.6	2480	257.9	6550	241.3	6130	58.1	1475	74.6	1895	5 / 5	2950	1475
	FFT	236	6000	104.1	2645	277.4	7045	260.8	6625	64.6	1640	81.1	2060	5 / 5	2750	1350
B20X	STD	118	3000	78.7	2000	159.4	4050	141.9	3605	5.3	135	5.3	135	5 / 7	4000	2000
	STD	130	3300	84.6	2150	171.3	4350	153.7	3905	5.3	135	5.3	135	5 / 7	4000	2000
	STD	138	3500	88.6	2250	179.1	4550	161.6	4105	5.3	135	5.3	135	5 / 7	4000	2000
	STD	146	3700	92.5	2350	187.0	4750	169.5	4305	5.3	135	5.3	135	5 / 7	4000	2000
	STD	157	4000	100.4	2550	198.8	5050	181.3	4605	5.3	135	5.3	135	5 / 7	4000	2000
	STD	177	4500	110.2	2800	218.5	5550	201.0	5105	5.3	135	5.3	135	5 / 7	3800	1900
	FF	106	2700	72.8	1850	147.6	3750	131.1	3330	33.3	845	49.8	1265	5 / 5	4000	2000
	FF	118	3000	78.7	2000	159.4	4050	142.9	3630	39.2	995	55.7	1415	5 / 5	4000	2000
	FF	130	3300	84.6	2150	171.3	4350	154.7	3930	45.1	1145	61.6	1565	5 / 5	4000	2000
	FFT	157	4000	74.0	1880	199.0	5055	182.5	4635	34.4	875	51.0	1295	5 / 5	3800	1900
	FFT	177	4500	80.5	2045	218.5	5550	202.0	5130	40.9	1040	57.5	1460	5 / 5	3800	1900
	FFT	187	4750	83.9	2130	228.3	5800	211.8	5380	44.3	1125	60.8	1545	5 / 5	3600	1800
	FFT	197	5000	88.4	2245	238.2	6050	221.7	5630	48.8	1240	65.4	1660	5 / 5	3500	1725
	FFT	217	5500	97.6	2480	258.1	6555	241.5	6135	58.1	1475	74.6	1895	5 / 5	3200	1650
	FFT	236	6000	104.1	2645	277.6	7050	261.0	6630	64.6	1640	81.1	2060	5 / 5	3000	1500

Note : These load capacities are based on the standard chassis without side shifter.

■ Standard equipment

48 Volt electric chassis with AC system
Battery connector
Tires
3-section valve with 2-levers
Seat
3300mm STD 2-stage mast
Tilt cylinder (5 deg.fwd / 7 deg.back)
Carriage
Load backrest
900mm fork
Without battery & charger

■ A standard chassis includes

48 Volt electrical system
Oil-cooled Disc Brake
Power steering
AC(Alternative Current) control panel
Tilt steering wheel
2 Front floodlights
DC/DC converter

■ LOAD CAPACITY CHART

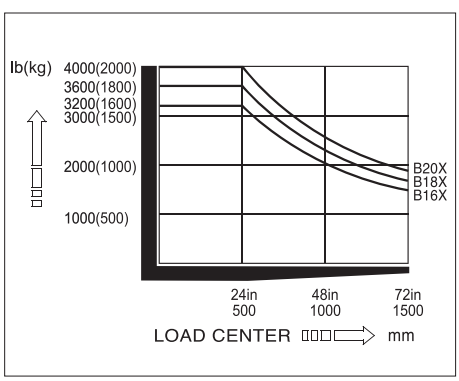

Specification values quoted in this catalog have been rounded.
Products and specifications are subject to improvement and change without notice.
Performance may vary due to operating conditions.
The performance shown represents nominal values obtained under typical operating conditions.

Productivity Comes Standard

https://truckmanualshub.com/

SPECIFICATIONS(48V AC TRUCK)

CHARACTERISTICS	2	Model			B16X	B18X	B20X
	3	Load Capacity	at rated load center	lb(kg)	3000(1600)	3500(1800)	4000(2000)
	4	Load Center		in(mm)	24(500)	24(500)	24(500)
	5	Power Type			Electric	Electric	Electric
	6	Operator Type			Driver Seated	Driver Seated	Driver Seated
	7	Tire Type	P : Pneumatic, E : Solid Soft		P, E	P, E	P, E
	8	Wheels (x=Driven)			2x / 2	2x / 2	2x / 2
DIMENSIONS	9	Max. Fork Height	with STD 2-stage mast	in(mm)	130(3300)	130(3300)	130(3300)
	10	Free Lift		in(mm)	5.1(130)	5.1(130)	5.1(135)
	12	Fork Carriage	ISO Class		II	II	II
	13	Forks	Thickness × Width × Length	in(mm)	1.4×3.9×35.4(35×100×900)	1.4×3.9×35.4(35×100×900)	1.6×3.9×35.4(40×100×900)
			Fork Spacing(Min / Max)	in(mm)	240 / 905	240 / 905	240 / 905
	14	Tilt of Mast	Forward / Backward	deg	5 / 7	5 / 7	5 / 7
	15	Overall Dimensions	Length to Fork Face	in(mm)	82.4(2093)	82.4(2093)	82.6(2098)
	16		Overall Width	in(mm)	42.9(1090)	42.9(1090)	44.1(1119)
	17		Mast Lowered Height	in(mm)	84.6(2150)	84.6(2150)	84.6(2150)
	18		Mast Extended Height	in(mm)	171.1(4345)	171.1(4345)	171.3(4350)
	19		Overhead Guard Height	in(mm)	78.2(1985)	78.2(1985)	78.2(1985)
	20		Seat Height	in(mm)	36.2(919)	36.2(919)	36.2(919)
	21	Turning Radius	Minimum outside	in(mm)	77.0(1955)	77.0(1955)	77.0(1955)
	22	Load Moment Center		in(mm)	14.8(376)	14.8(376)	15.0(381)
	23	Right Angle Stacking Aisle Width With Pallets 1200×800 / 1000×1200[L×W]		in (mm)	146.9 / 139.0 (3731 / 3531)	146.9 / 139.0 (3731 / 3531)	147.1/139.2 (3736 / 3536)
PERFOR MANCE	24	Speed	Travel, Loaded / Unloaded	mph(km/h)	10.6 / 10.6(17 / 17)	10.6 / 10.6(17 / 17)	10.6 / 10.6(17 / 17)
	25		Lifting, Loaded / Unloaded	fpm(mm/s)	78.5 / 117.8(400 / 600)	78.5 / 117.8(400 / 600)	78.5 / 117.8(400 / 600)
	26		Lowering, Loaded / Unloaded	fpm(mm/s)	98.2 / 88.4(500 / 450)	98.2 / 88.4(500 / 450)	98.2 / 88.4(500 / 450)
	28	Max, Drawbar Pull	Loaded	lb(kg)	2866(1300)	2866(1300)	2866(1300)
	30	Max, Gradeability	at 1.6 km/h, Loaded	%	26	25	25
WEI GHT	32	Total Weight	With minimum weight of battery	lb(kg)	6878(3120)	7253(3290)	7584(3440)
	33	Axle Load, Loaded	Front / Rear	lb(kg)	9259 / 1150(4200 / 521)	9932 / 1290(4505 / 585)	10624 / 1369(4819 / 621)
	34	Axle Load, Unloaded	Front / Rear	lb(kg)	3565 / 3314(1617 / 1503)	3527 / 3728(1600 / 1691)	3492 / 4094(1584 / 1857)
CHASSIS	35	Tires	Number of wheels (Front / Rear)		2 / 2	2 / 2	2 / 2
	36		Size, Front		18×7-8	200×50-10	200×50-10
	37		Size, Rear		16×6-8	16×6-8	16×6-8
	38	Wheel Base	Distance	in(mm)	55.5(1410)	55.5(1410)	55.5(1410)
	39	Tread Width	Front	in(mm)	35.5(902)	35.9(912)	35.9(912)
			Rear	in(mm)	35.0(890)	35.0(890)	35.0(890)
	40	Ground Clearance	Loaded – at lowest	in(mm)	86	86	86
	41		Loaded – at center of wheelbase	in(mm)	3.9(100)	3.9(100)	3.9(100)
	42	Brakes	Service		Hydraulic	Hydraulic	Hydraulic
	43		Parking		Mechanical	Mechanical	Mechanical
POWER TRAIN	45	Battery	Type		Lead-acid	Lead-acid	Lead-acid
			Voltage / Capacity(Max)	V/AH	48 / 585	48 / 585	48 / 585
			Compartment – Length	in(mm)	20.8(528)	25(636)	25(636)
			Compartment – Width	in(mm)	39.1(992)	39.1(992)	39.1(992)
			Compartment – Height	in(mm)	26.8(680)	26.8(680)	26.8(680)
			Minimum Weight	lb(kg)	2315(1050)	2315(1050)	2315(1050)
	47	Electric Motors	Drive Motor - 1Hour Rating	hp(kW)	6.7(5.0)×2	6.7(5.0)×2	6.7(5.0)×2
	48		Hydraulic Motor - 20% Duty	hp(kW)	20.1(15)	20.1(15)	20.1(15)
	54	Control Type		type	MOSET Inverter	MOSET Inverter	MOSET Inverter
	55	Transfer	Brake Type	type	ODB	ODB	ODB
	57	Relief Pressure	Lift	psi(kpa)	2870(19800)	2870(19800)	3125(21550)
			Attachment	psi(kpa)	2030(14000)	2030(14000)	2030(14000)

Dimensional drawings

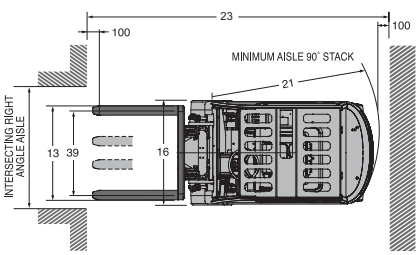

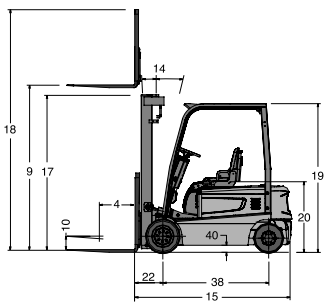

Doosan Industrial Vehicle America Corp.
2905 Shawnee Industrial Parkway, Suwanee,GA 30024 U.S.A.
Tel : 770-831-2200 Fax : 770-831-2250 www.doosanlift.com