https://truckmanualshub.com/

Haulotte GROUP

CE

OPERATING AND MAINTENANCE INSTRUCTIONS

SELF-PROPELLED SCISSOR PLATFORM

H12SX - H15SX - H18SX

242 032 4100 - E 06.07 GB

ISO 9001 V2000 Haulotte GROUP

WWW.HAULOTTE.COM

Haulotte GROUP
Pinguely-Haulotte - La Péronnière - BP 9 - 42152 l'Horme - France - Tel : +33 (0)4 77 29 24 24 - Fax : +33 (0)4 77 29 43 95 - email : haulotte@haulotte.com

https://truckmanualshub.com/

https://truckmanualshub.com/

Distribué par / *Distributed by/ Distribuito da*

Haulotte France
Tél / *Phone* +33 (0)4 72 88 05 70
Fax / *Fax* +33 (0)4 72 88 01 43

Centre Mondial Pièces de Rechange
Spare Parts International Centre
Tél / *Phone* +33 (0)4 77 29 24 51
Fax / *Fax* +33 (0)4 77 29 98 88

Haulotte Hubarbeitsbühnen
Tél / *Phone* + 49 76 33 806 920
Fax / *Fax* + 49 76 33 806 82 18

Haulotte Portugal
Tél / *Phone* + 351 21 955 98 10
Fax / *Fax* + 351 21 995 98 19

Haulotte UK
Tél / *Phone* + 44 (0) 1952 292753
Fax / *Fax* + 44 (0) 1952 292758

Haulotte U.S. Inc.
Main tool free 1-877-HAULOTTE
Service tool free 1-877-HAULOT-S

Haulotte Singapore Pte Ltd
Tél / *Phone* + 65 6536 3989
Fax / *Fax* + 65 6536 3969

Haulotte Netherlands BV
Tél / *Phone* + 31 162 670 707
Fax / *Fax* + 31 162 670 710

Haulotte Australia PTY Ltd
Tél / *Phone* + 61 3 9706 6787
Fax / *Fax* + 61 3 9706 6797

Haulotte Italia
Tél / *Phone* + 39 05 17 80 813
Fax / *Fax* + 39 05 16 05 33 28

Haulotte Do Brazil
Tél / *Phone* + 55 11 3026 9177
Fax / *Fax* + 55 3026 9178

Haulotte Scandinavia AB u.b.
Tél / *Phone* + 46 31 744 32 90
Fax / *Fax* + 46 31 744 32 99

Haulotte Iberica - Madrid
Tél / *Phone* + 34 91 656 97 77
Fax / *Fax* + 34 91 656 97 81

Haulotte Iberica - Sevilla
Tél / *Phone* + 34 95 493 44 75
Fax / *Fax* + 34 95 463 69 44

https://truckmanualshub.com/

https://truckmanualshub.com/

Why use only Haulotte original spare-parts ?

1. RECALLING THE EEC DECLARATION OF CONFORMITY IN QUESTION

Components, substitutions, or modifications other than the ones recommended by **Haulotte** may recall in question the initial security conditions of our **Haulotte** equipment. The person who would have intervened for any operation of this kind will take responsibility and recall in question the EEC marking validity granted by **Haulotte**. The EEC declaration will become null and void and **Haulotte** will disclaim regulation responsibility.

2. END OF THE WARRANTY

The contractual warranty offered by **Haulotte** for its equipment will no longer be applied after spare-parts other than original ones are used.

3. PUBLIC AND PENAL LIABILITY

The manufacture and unfair competition of fake spare-parts will be sentenced by public and penal law. The usage of fake spare-parts will invoke the civil and penal liability of the manufacturer, of the retailer, and, in some cases, of the person who used the fake spare-parts.
Unfair competition invokes the civil liability of the manufacturer and the retailer of a “slavish copy” which, taking unjustified advantage of this operation, distorts the normal rules of competition and creates a “parasitism” act by diverting efforts of design, perfection, research of best suitability, and the know-how of **Haulotte**.

FOR YOUR SECURITY, REQUIRE HAULOTTE ORIGINAL SPARE-PARTS

4. QUALITY

Using **Haulotte** original spare-parts means guarantee of :

- High quality partsl
- The latest technological evolution
- Perfect security
- Peak performance
- The best service life of your **Haulotte** equipment
- The **Haulotte** warranty
- **Haulotte** technicians' and repair agents' technical support

5. AVAILABILITY

Using Haulotte original spare-parts allows you to take advantage of 40 000 references available in our permanent stock and a 98% service rate.

WHY NOT TAKE ADVANTAGE ?

https://truckmanualshub.com/

GENERAL

You have just taken delivery of your mobile elevating work platform

It will give you complete satisfaction if you follow the operating and maintenance instructions exactly.

The purpose of this instruction manual is to help you in this.

We stress the importance:
- of complying with the safety instructions relating to the machine itself, its use and its environment,
- of using it within the limits of its performances,
- of proper maintenance upon which its service life depends.

During and beyond the warranty period, our After-Sales Department is at your disposal for any service you might need.

Contact in this case our Local Agent or our Factory After-Sales Department, specifying the exact type of machine and its serial number.

When ordering consumables or spares, use this documentation, together with the «Spares» catalogue so as to receive original parts, the only guarantee of interchangeability and perfect operation.

This manual is supplied with the machine and is included on the delivery note.

REMINDER: You are reminded that our machines comply with the provisions of the «Machines Directive» 89/392/EEC of June 14th 1989 as amended by the directives 91/368/EEC of June 21st 1991, 93/44/EEC of June 14th 1993, 93/68/EEC of July 22nd 1993 and 89/336/EEC of May 3rd 1989, directive 2000/14/CE and directive EMC/89/336/CE.

Caution!
The technical data contained in this manual cannot involve our responsibility and we reserve the right to proceed with improvements or modifications without amending this manual.

CONTENTS

1 - GENERAL RECOMMENDATIONS - SAFETY 1

1.1 - GENERAL WARNING 1

1.1.1 - Manual 1

1.1.2 - Labels 1

1.1.3 - Safety 1

1.2 - GENERAL SAFETY INSTRUCTIONS 2

1.2.1 - Operators 2

1.2.2 - Environment 2

1.2.3 - Using the machine 2

1.3 - RESIDUAL RISKS 4

1.3.1 - Risks of jolting - Overturning 4

1.3.2 - Electrical risks 4

1.3.3 - Risks of explosion or burning 4

1.3.4 - Risks of collision 4

1.3.5 - Abnormal noise 4

1.4 - VERIFICATIONS 4

1.4.1 - Routine verifications 4

1.4.2 - Examination of suitability of a machine 5

1.4.3 - State of conservation 5

1.5 - REPAIRS AND ADJUSTMENTS 5

1.6 - VERIFICATIONS AT THE TIME OF PUTTING BACK INTO SERVICE 5

1.7 - BEAUFORT SCALE 6

1.8 - MINIMUM SAFETY DISTANCES 6

2 - PRESENTATION 7

2.1 - IDENTIFICATION 7

2.2 - MAIN COMPONENTS 8

2.3 - WORK AREA 9

2.3.1 - H12SX 9

2.3.2 - H15SX 10
2.3.3 - H18SX 11

2.4 - OVERALL DIMENSIONS 12
2.4.1 - H12SX 12
2.4.2 - H15SX 12
2.4.3 - H18SX 12

2.5 - CHARACTERISTICS 13
2.5.1 - Technical characteristics to H12SX 13
2.5.2 - Technical characteristics to H15SX 14
2.5.3 - Technical characteristics to H18SX 15

2.6 - LABELS 16
2.6.1 - Common "yellow" labels 16
2.6.2 - Common "orange" labels 16
2.6.3 - Common "red" labels 17
2.6.4 - Other labels 17
2.6.5 - Model-specific labels 18
2.6.6 - Specific labels: Option 19

2.7 - MACHINE LABEL REFERENCES 21

2.8 - POSITION OF LABELS ON THE MACHINE 22

3 - OPERATING PRINCIPLE 23

3.1 - HYDRAULIC CIRCUIT 23
3.1.1 - Scissor lifting, travel movements, stabilising movements 23
3.1.2 - Steer movement 23
3.1.3 - Scissor lifting cylinder 23
3.1.4 - Brake release of the wheel reducers during travel 23

3.2 - ELECTRIC CIRCUIT AND OPERATING SAFETY SYSTEMS 23
3.2.1 - General 23
3.2.2 - Automatic motor stop 23
3.2.3 - Load check 24
3.2.4 - Tilt check 24
3.2.5 - Travel speed 24
3.2.6 - Hour counter 24
3.2.7 - HEAD computer 24

4 - USING THE MACHINE 27

4.1 - GENERAL INSTRUCTIONS 27
4.1.1 - Movement 27
4.1.2 - Filling the fuel tank 27

4.2 - OFFLOADING – LOADING – MOVEMENT 28
4.2.1 - Offloading with ramps 28
4.2.2 - Loading 28
4.2.3 - Travel 29

4.3 - OPERATIONS BEFORE FIRST OPERATION 29
4.3.1 - Platform control station 29
4.3.2 - Chassis control station 31
4.3.3 - Fitting the guard rails 31
4.3.4 - Checks before any operation 32

4.4 - OPERATION 34
4.4.1 - Operations from the ground 34
4.4.2 - Operations from the platform 35

4.5 - MANUAL EXTENSIONS 38

4.6 - RESCUE LOWERING 38

4.7 - EMERGENCY ASSISTANCE LOWERING 38

4.8 - UNCOUPLING 40

4.9 - STABILISERS 41

4.10 - ON-BOARD GENERATOR (OPTION) 43
4.10.1 - Instructions 43

5 - MAINTENANCE 45

5.1 - GENERAL RECOMMENDATIONS 45

5.2 - MAINTENANCE SYSTEM 45

5.3 - MAINTENANCE PLAN 47
5.3.1 - Consumables 47
5.3.2 - Maintenance diagram 48

5.4 - OPERATIONS 49

5.4.1 - Summary table 49
5.4.2 - Procedure 50
5.4.3 - List of consumables 51

6 - TROUBLE-SHOOTING 53

6.1 - PLATFORM LIFTING SYSTEM. 53

6.2 - TRAVEL SYSTEM 54

6.3 - STEER SYSTEM 54

7 - SAFETY SYSTEM 55

7.1 - FUNCTION OF RELAYS AND FUSES - CHASSIS BOX 55

7.2 - FUNCTION OF THE SAFETY SWITCHES 55

8 - WIRING DIAGRAMS 57

8.1 - H12SX - H15SX - H18SX FOLIO A-001 57

8.2 - H12SX - H15SX - H18SX FOLIO A-002 58

8.3 - H12SX - H15SX - H18SX FOLIO A-003 59

8.4 - H12SX - H15SX - H18SX FOLIO A-004 60

8.5 - H12SX - H15SX - H18SX FOLIO A-005 61

9 - HYDRAULIC DIAGRAMS 63

9.1 - H12SX - H15SX 63

9.2 - H18SX 64

https://truckmanualshub.com/

1 - GENERAL RECOMMENDATIONS - SAFETY

1.1 - GENERAL WARNING

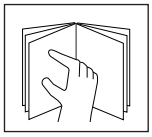

1.1.1 - Manual

The purpose of this manual is to help the operator to get to know HAULOTTE self-propelled lifts so as to use them efficiently and SAFELY. It cannot, however, replace the basic training necessary for any user of site plant.

The head of establishment has an obligation to ensure that operators know the instructions in the instruction manual. The head of establishment is also responsible for the implementation of the "user regulations" in force in the country of use.

Before using the machine, it is essential for safe use of the platform and its efficiency to familiarise yourself with all these instructions.

This instruction manual must be kept available to any operator. Additional copies can be supplied by the manufacturer on request.

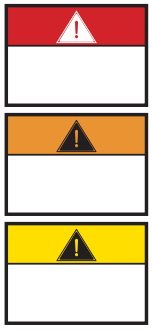

1.1.2 - Labels

The potential dangers and instructions concerning the machine are indicated by labels and plates. It is necessary to read the instructions appearing on them.

All of the labels comply with the following colour code:

- The colour red indicates a potentially mortal danger.
- The colour orange indicates a danger which may cause serious injury.
- The colour yellow indicates a danger which may cause material damage or slight injury.

The head of the establishment must make sure that these labels are in good condition, and must take the necessary steps to keep them legible. Additional labels can be supplied on request by the manufacturer.

1.1.3 - Safety

Ensure that any person to whom you entrust the machine is capable of assuming the safety requirements of its use.

Avoid any working mode liable to jeopardise safety. Any use not compliant with the instructions could lead to risks and injury to people and damage to property.

Caution!
In order to attract the reader's attention, the instructions will be preceded by this standardized sign.

The operating manual must be kept by the user throughout the machine's life including in the event of loan, hiring-out or re-sale.

Make sure that all the plates or labels relating to safety and danger are complete and legible.

1.2 - GENERAL SAFETY INSTRUCTIONS

1.2.1 - Operators

The operators must be over 18 and must hold an operating permit issued by the employer after he has checked their medical fitness and after they have passed a practical lift driving/operating test.

Caution!
Only trained operators can use Haulotte self-propelled lifts.

There must be at least two operators so that one of them can:

- Intervene quickly if necessary.
- Take the controls in the event of an accident or breakdown.
- Monitor and prevent machines and pedestrians going round the lift.
- Guide the lift's operator if required.

1.2.2 - Environment

The user must recognize the surface on which the nacelle will roll.

Never use the machine:

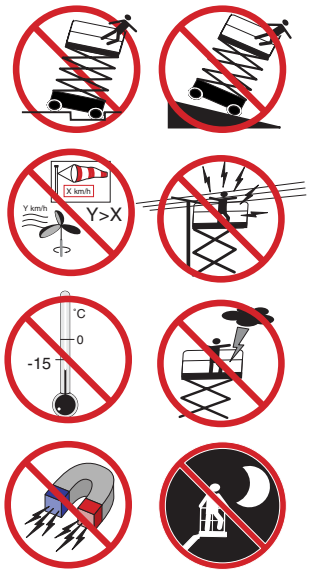

- On soft, unstable, cluttered ground.
- On ground with a bank greater than the permissible limit.
- With exposure to a wind greater than the permissible threshold. If used outside, make sure, using an anemometer, that the wind speed is less than or equal to the permissible threshold.
- Near power lines (find out the minimum approach distance depending on the voltage). In temperatures below -15°C (particularly in cold stores). Consult us if it is necessary to work below -15°C.
- In explosive areas.
- During storms (risk of lightning).
- At night without floodlighting.
- When there are very strong electromagnetic fields (radar, mobiles and high currents).

DO NOT TRAVEL ON PUBLIC HIGHWAYS.

1.2.3 - Using the machine

It is important to ensure that in normal use, that is lift operation, the lift post selection key remains in the lift position so as to be able to control the lift from the platform. In the event of a problem on the platform, a person present and trained in emergency/standby manoeuvres can assist by putting the key in the ground control position.

Do not use the machine with:

- A load greater than the nominal load.
- More people than the authorized number.
- A lift lateral force greater than the permissible value.
- A wind greater than the permissible speed.

https://truckmanualshub.com/

In order to avoid any risk of a serious fall, it is essential for operators to comply with the following instructions:

- Hold on to the guard rails firmly when the lift is being raised or driven.
- Wipe any traces of oil or grease off the steps, floor and hand rails.
- Wear individual protective equipment suited to the working conditions and local regulations in force, particularly when working in a dangerous area.
- Do not neutralise the limit switches on the safety devices.
- Avoid hitting fixed or moving obstacles.
- Do not increase the working height by using ladders or other accessories.
- Do not use the guard rails as a means of access for getting onto and off the platform (use the steps provided for this purpose on the machine).
- Do not climb onto the guard rails when the platform is in the raised position.
- Do not drive the lift at high speed in areas which are narrow or not cleared.
- Do not use the machine without fitting the lift's protective bar or without closing the safety gate.
- Do not climb onto the covers.

Caution!
Never use the platform as a crane, goods lift or lift. Never use the platform to pull or tow.

In order to avoid risks of overturning, it is essential for operators to comply with the following instructions:

- Do not neutralise the limit switches on the safety devices.
- Avoid operating the control levers for one direction in the opposite direction without stopping in the " 0 " position (in order to stop during travelling, move the manipulator's lever gradually).
- Comply with the maximum load as well as the number of people authorized on the lift.
- Distribute the loads and place them if possible in the centre of the lift.
- Verify that the ground can take the pressure and load per wheel.
- Avoid hitting fixed or moving obstacles.
- Do not drive the lift at high speed in areas which are narrow or not cleared.
- Keep speed under control when turning.
- Do not drive the lift in reverse (lack of visibility).
- Do not use the machine with a cluttered lift.
- Do not use the machine with equipment or objects suspended from the guard rails.
- Do not use the machine with elements which could increase the wind load (e.g.: panels).
- Do not carry out machine maintenance operations when it is raised without having put in place the necessary safety devices (travelling crane, crane).
- Carry out the daily checks and monitor proper operation during periods of use.
- Protect the machine from any unsupervised intervention when it is not in service.

NOTE : *Do not tow the lift (it has not been designed for that and must be transported on a trailer).*

1.3 - RESIDUAL RISKS

1.3.1 - Risks of jolting - Overturning

The risks of jolting or overturning are considerable in the following situations:

- sudden operation of the control levers,
- overload of the lift,
- ground weakness (Beware of thawing in winter),
- gusting wind,
- hitting an obstacle on the ground or high up,
- working on quays, bays, pavements, etc...

Allow a sufficient stopping distance:

- 3 metres at high speed,
- 1 metre at low speed.

1.3.2 - Electrical risks

Caution!
If the machine has a 220 V power point, max. 16 A, it is essential for the extension lead to be connected to a mains outlet protected by a 30 mA quick-trip circuit-breaker.

The electrical risks are considerable in the following situations:

- hitting a power line,
- use in stormy weather.

“Minimum safety distances”, page 6

1.3.3 - Risks of explosion or burning

The risks of explosion or burning are considerable in the following situations:

- work in an explosive or flammable atmosphere,
- using a machine with hydraulic leaks.

1.3.4 - Risks of collision

- Risks of crushing people present in the area in which the machine is operating (during travelling or operation of the equipment).
- Evaluation by the operator, before any use, of the risks above him.

1.3.5 - Abnormal noise

When the platform is started, the user must listen for abnormal noise :

- seizure,
- discharge of an equilibrium valve,
- discharge of a pressure limiter, etc.

If abnormal noise is detected, the user must stop using the equipment immediately and contact the PINGUELY HAULOTTE After-Sales department to detect the source of the problem.

1.4 - VERIFICATIONS

Comply with the national regulations in force in the country of use.

For FRANCE: Order of March 1st 2004 + circular DRT 93-22 September 1993 specifying:

1.4.1 - Routine verifications

The machine must be the subject of routine inspections every 6 months so that any defect liable to cause an accident is detected.

These inspections must be carried out by an organisation or personnel specially designated by the head of establishment and under the latter's responsibility (company's personnel or not) (Articles R 233-5 and R 233-11 of the Code du Travail).

The result of these inspections must be entered in a safety register opened by the head of establishment and kept constantly available to the works inspector and

safety committee of the establishment, if there is one, as well as a list of the specially designated personnel (Article R 233-5 of the Code du Travail).

NOTE : Such register can be obtained from the trade organisations and some of them can be obtained from the OPPBTP or private prevention organisations.

The people designated must be experienced in the field of risk prevention (Articles R 233-11 of Decree n° 93-41).

It is forbidden to allow any worker to proceed, during the operation of the machine, with any verification whatsoever (Article R 233-11 of the Code du Travail).

1.4.2 - Examination of suitability of a machine

The head of the establishment in which this equipment is put into service must make sure of the suitability of the machine, that is, that it is appropriate for the works to be carried out safely and that it is used in accordance with the instruction manual. In addition, in the above-mentioned French order of March 1st 2004, problems associated with hiring, the examination of the state of conservation, verification at the time of putting back into service after repair, as well as coefficient 1.25 static test and coefficient 1.1 dynamic test conditions are mentioned. Each person responsible using the machine must acquaint himself and follow the requirements of this decree.

1.4.3 - State of conservation

Detect any damage liable to be the cause of dangerous situations (safety devices, load limiters, tilt monitor, leaks from cylinders, deformation, condition of welds, tightness of bolts, hoses, electrical connections, condition of tyres, excessive mechanical play).

NOTE : In the case of hiring, the person responsible using the hired machine has the responsibility of examining the state of conservation and for examining suitability. He must check with the hirer that the routine general verifications and verifications before putting into service have indeed been carried out.

1.5 - REPAIRS AND ADJUSTMENTS

Major repairs, maintenance work or adjustments on the safety elements or systems (concerns mechanics, hydraulics and electricity).

They must be carried out by PINGUELY-HAULOTTE personnel or personnel working on behalf of PINGUELY-HAULOTTE who must use original parts only.

Any modification outside PINGUELY-HAULOTTE's control is not authorised.

The manufacturer is not liable if original parts are not used or if the work specified above is not carried out by PINGUELY-HAULOTTE approved personnel.

1.6 - VERIFICATIONS AT THE TIME OF PUTTING BACK INTO SERVICE

To be carried out after:

- major removal/refitting,
- a repair involving the machine's essential parts,
- any accident caused by the failure of an essential part.

It is necessary to proceed with an examination of suitability, an examination of the state of conservation, a static test, a dynamic test (see coefficients, § 1.4.2, page 5).

1.7 - BEAUFORT SCALE

The Beaufort Scale of wind force is accepted internationally and is used when communicating weather conditions. It consists of number 0 - 17, each representing a certain strength or velocity of wind at 10m (33 ft) above ground level in the open.

Description of Wind		Specifications for use on land	MPH	m/s
0	Calm	Calm; smoke rises vertically.	0-1	0-0.2
1	Light Air	Direction of wind shown by smoke.	1-5	0.3-1.5
2	Light Breeze	Wind felt on face; leaves rustle; ordinary vanes moved by wind.	6-11	1.6-3.3
3	Gentle Breeze	Leaves and small twigs in constant motion; wind extends light flag.	12-19	3.4-5.4
4	Moderate Breeze	Raises dust and loose paper; small Branches are moved.	20-28	5.5-7.9
5	Fresh Breeze	Small trees in leaf begin to sway; crested wavelets form on inland waterways.	29-38	8.0-10.7
6	Strong Breeze	Large branches in motion; whistling heard in telephone wires; umbrellas used with difficulty.	39-49	10.8-13.8
7	Near Gale	Whole trees in motion; inconvenience felt when walking against wind.	50-61	13.9-17.1
8	Gale	Breaks twigs off trees; generally impedes progress.	62-74	17.2-20.7
9	Strong Gale	Slight structural damage occurs (chimney pots and slates removed).	75-88	20.8-24.4

1.8 - MINIMUM SAFETY DISTANCES

Our machines are not insulated, hence, it is important to maintain a safety distance from the electrical power cables and devices according to applicable government regulations and the following diagram :

Voltage	Minimum safety distance in meters
Up to 300V	avoid contact
from 300 V to 50 kV	3,05 m
from 50 kV to 200 kV	4,60 m
from 200 kV to 350 kV	6,10 m
from 350 kV to 500 kV	7,62 m
from 500 kV to 750 kV	10,67 m
from 750 kV to 1000 kV	13,72 m

https://truckmanualshub.com/

2 - PRESENTATION

The self-propelled platform is designed for any high work within the limit of its characteristics.

The main operating station is on the platform extension. The rescue station and emergency assistance controls are on the ground.

2.1 - IDENTIFICATION

A plate, fixed to the chassis, gives all information (engraved) for machine identification.

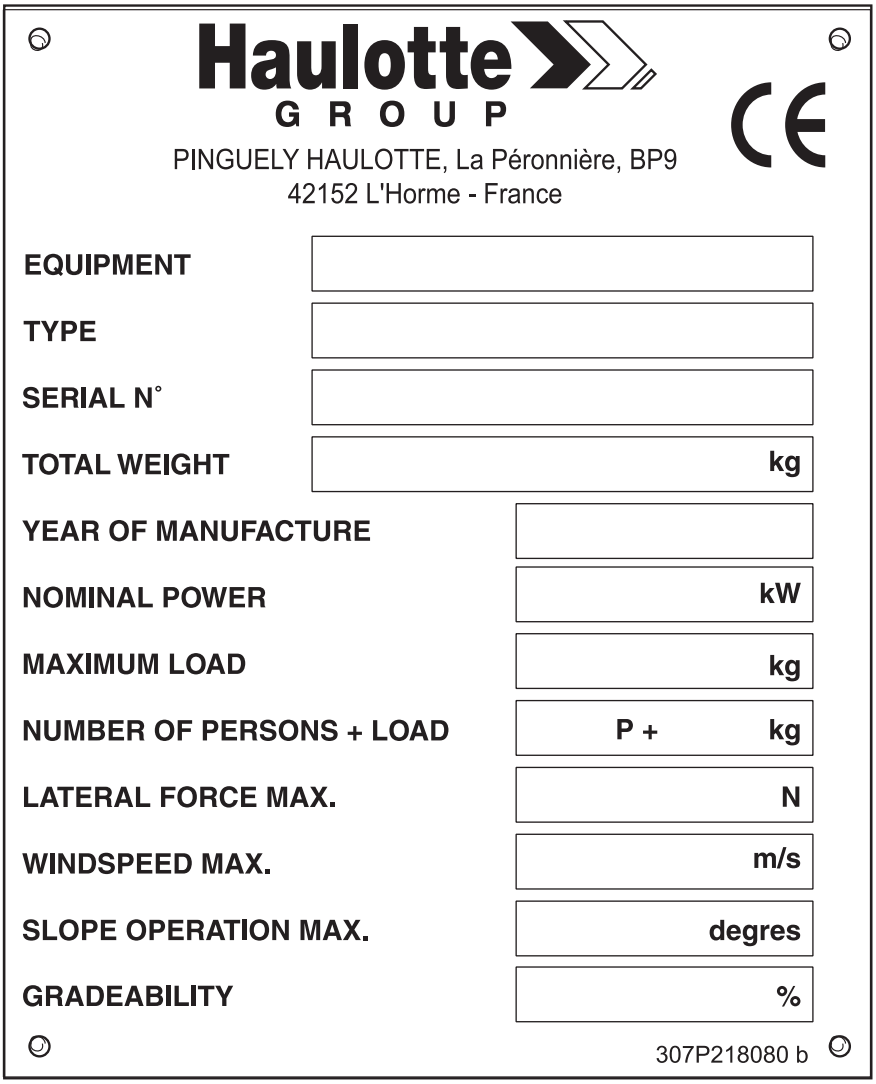

REMINDER :Whenever requesting information, intervention or spare parts, specify the machine type and serial no.

2.2 - MAIN COMPONENTS

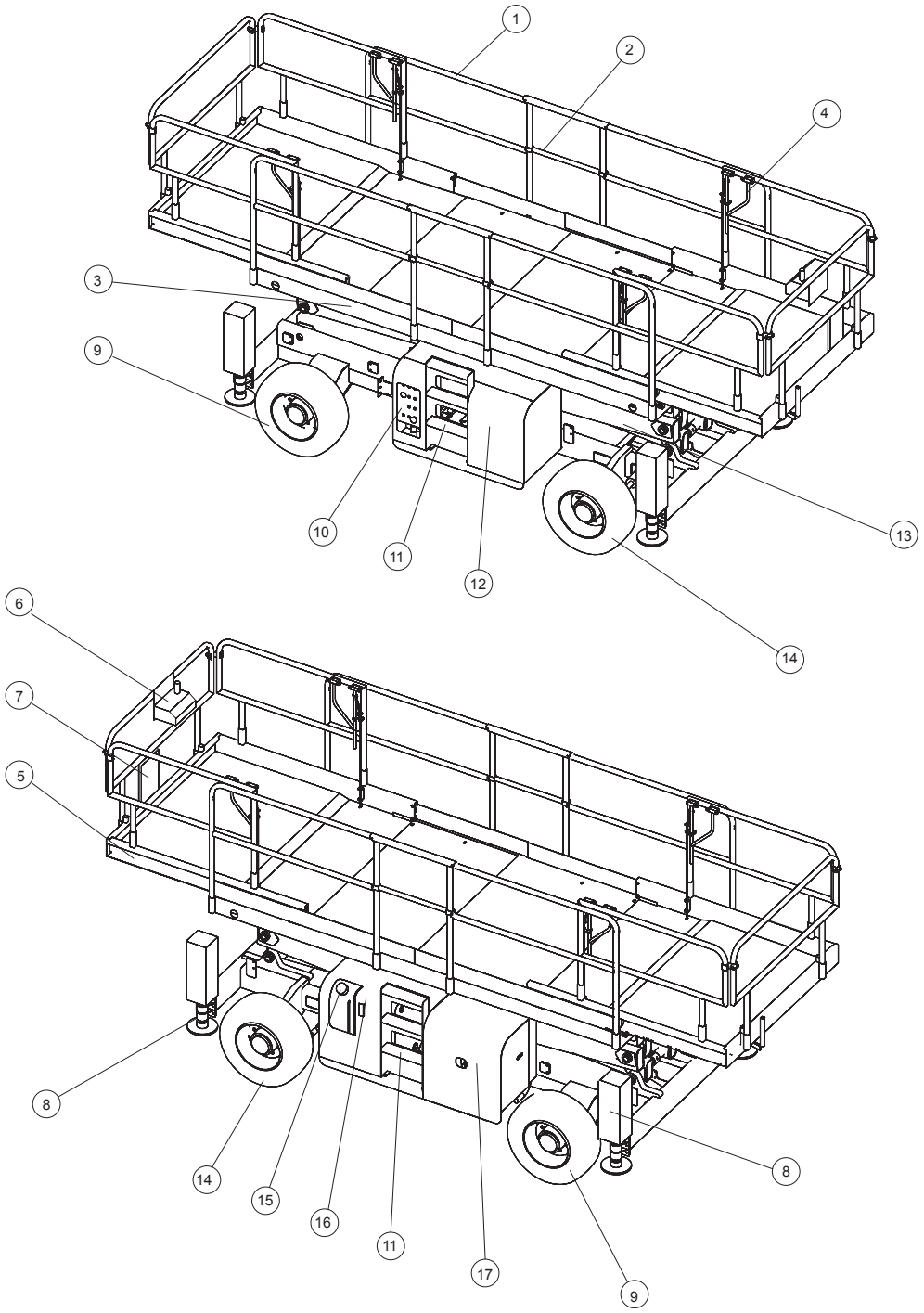

1- Upper handrail	10- Chassis control box
2- Sliding protective bar	11- Access ladder
3- Platform	12- Hydrualic circuit
4- Extension	13- Scissors
5- Single extension	14- Drive-steer wheels
6- Platform control box	15- Diesel tank
7- Document holder	16- Hydraulic oil tank
8- Stabiliser	17- Thermal motor
9- Drive wheels	

https://truckmanualshub.com/

2.3 - WORK AREA

2.3.1 - H12SX

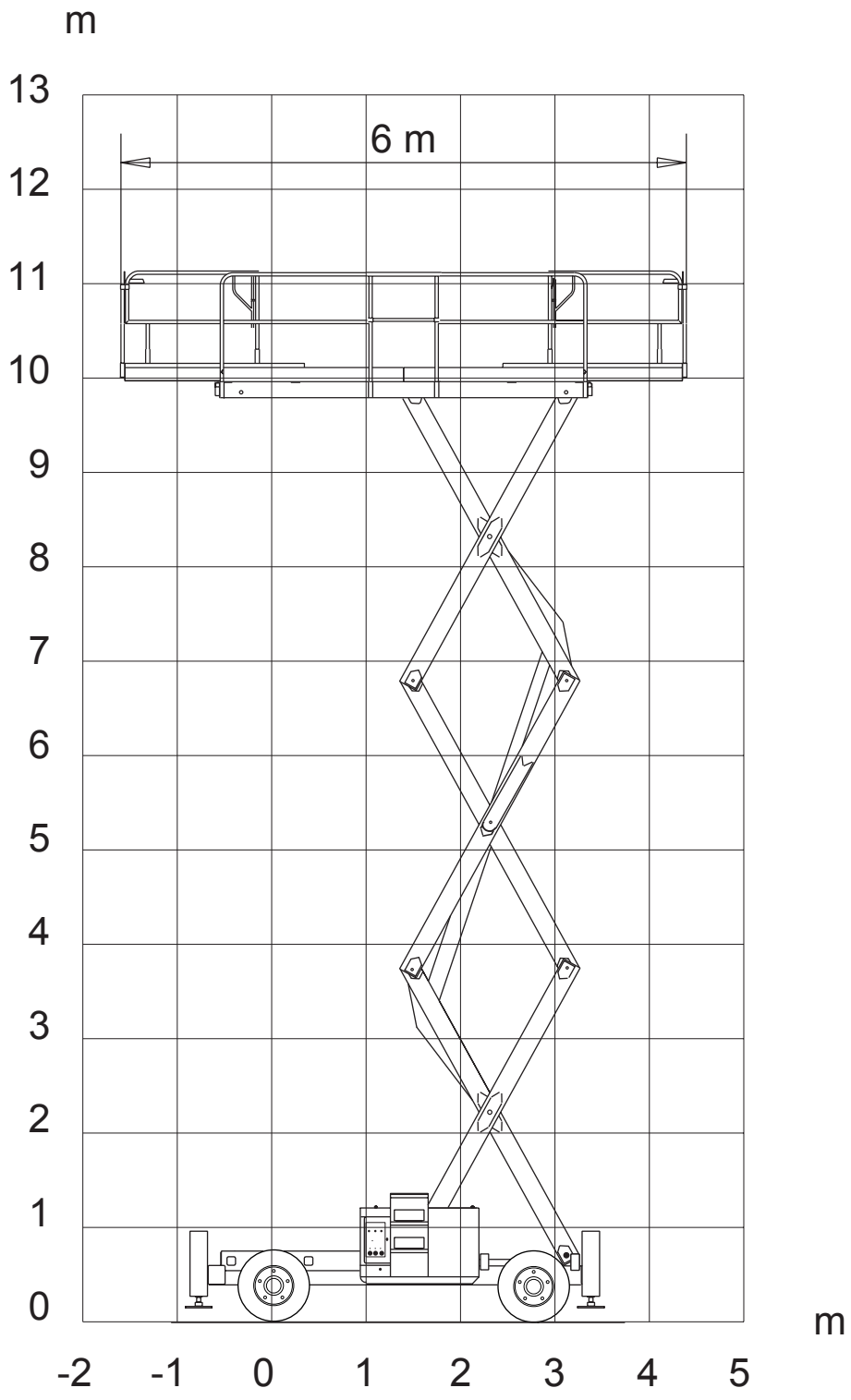

2.3.2 - H15SX

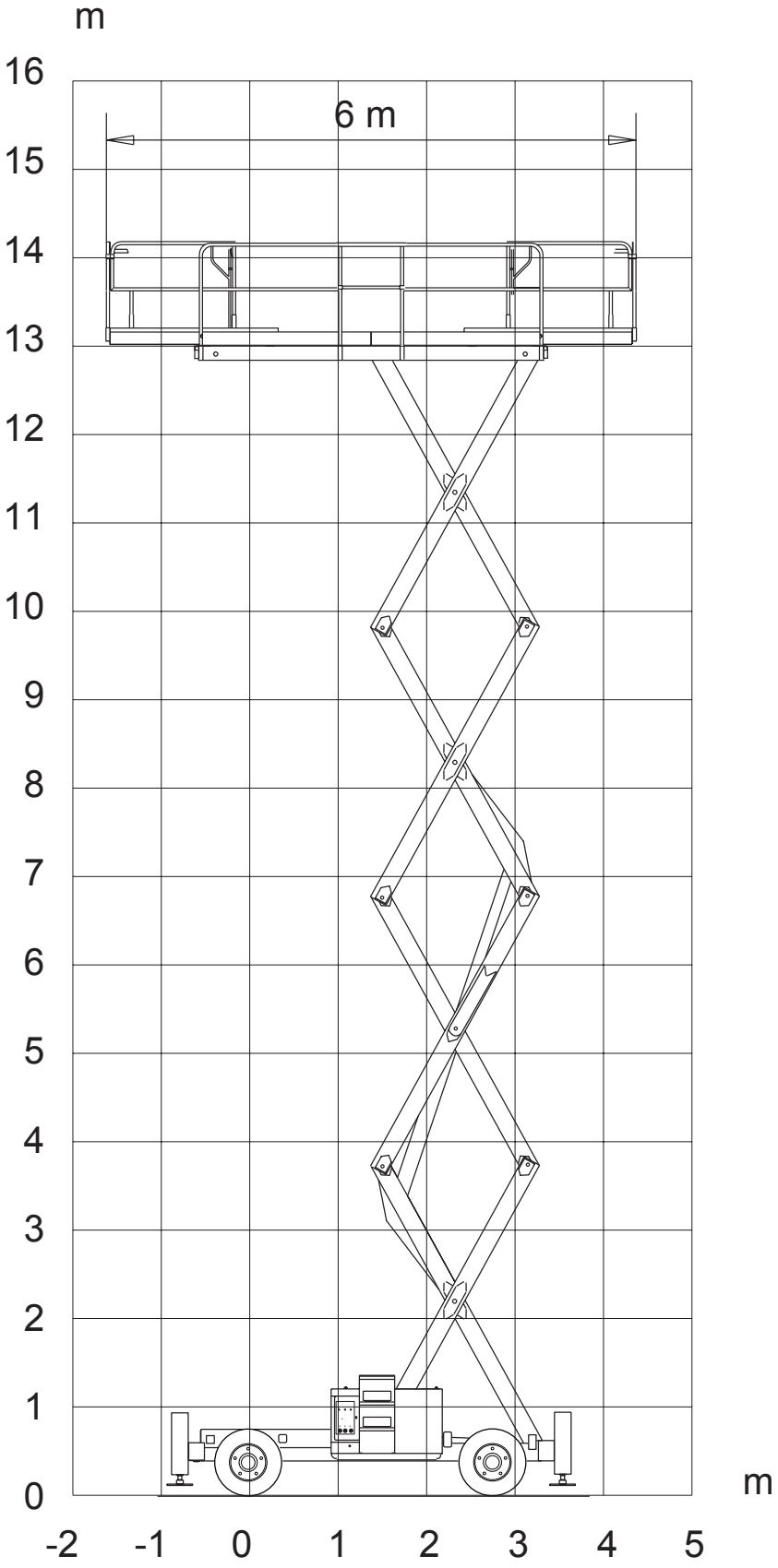

https://truckmanualshub.com/

2.3.3 - H18SX

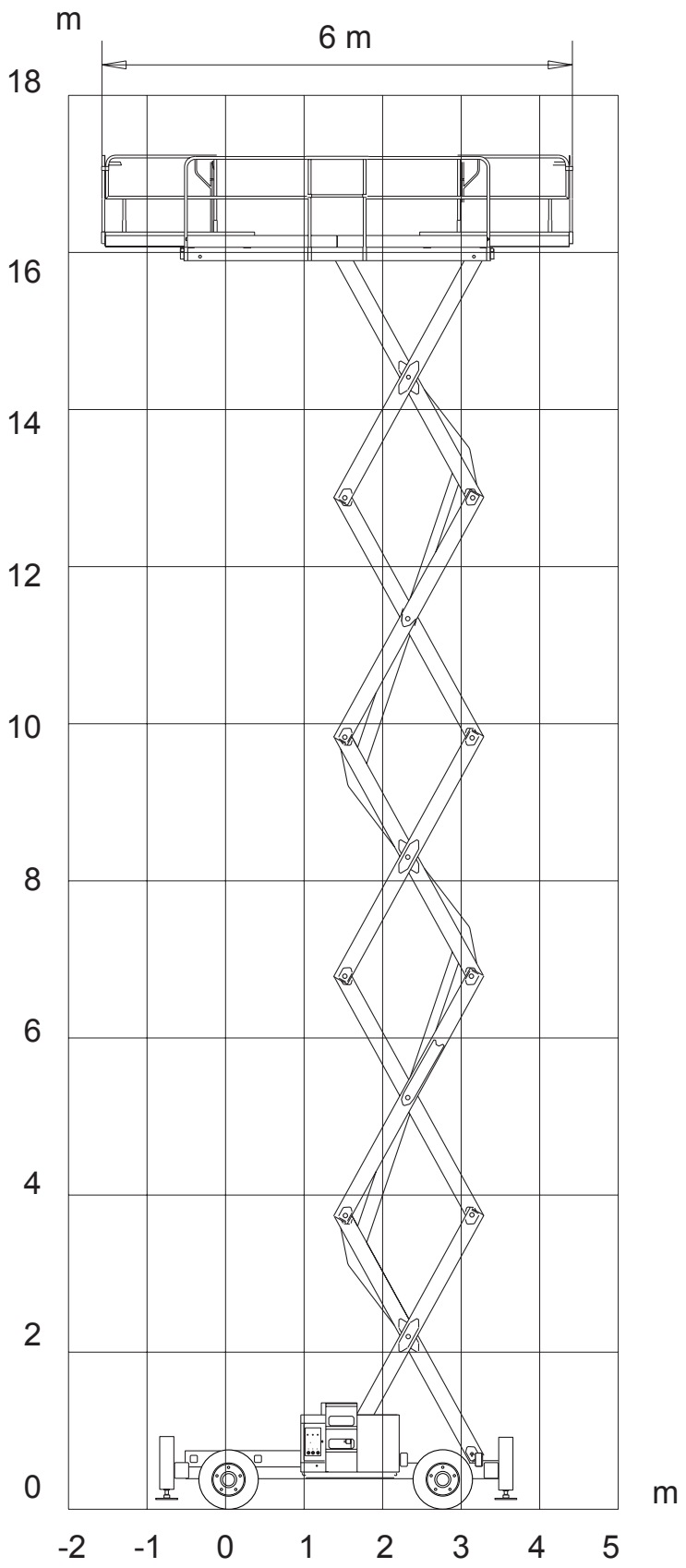

2.4 - OVERALL DIMENSIONS

2.4.1 - H12SX

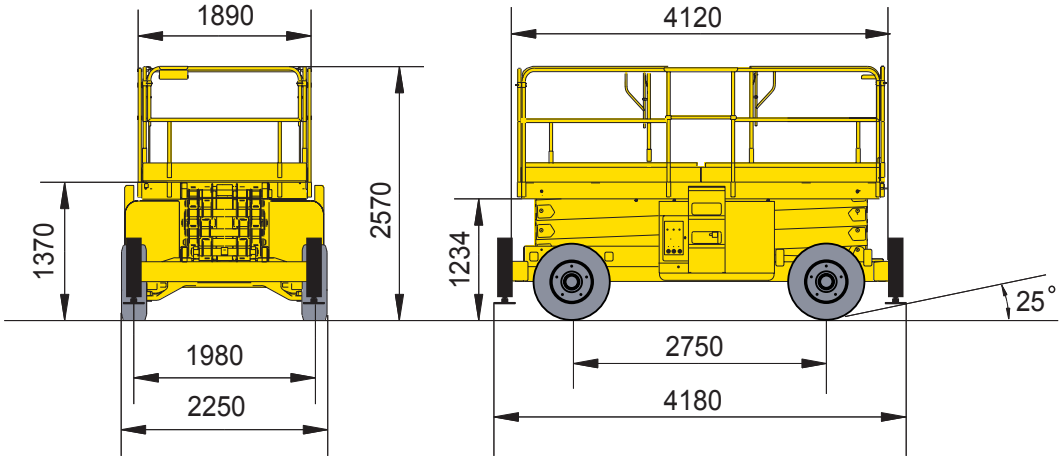

2.4.2 - H15SX

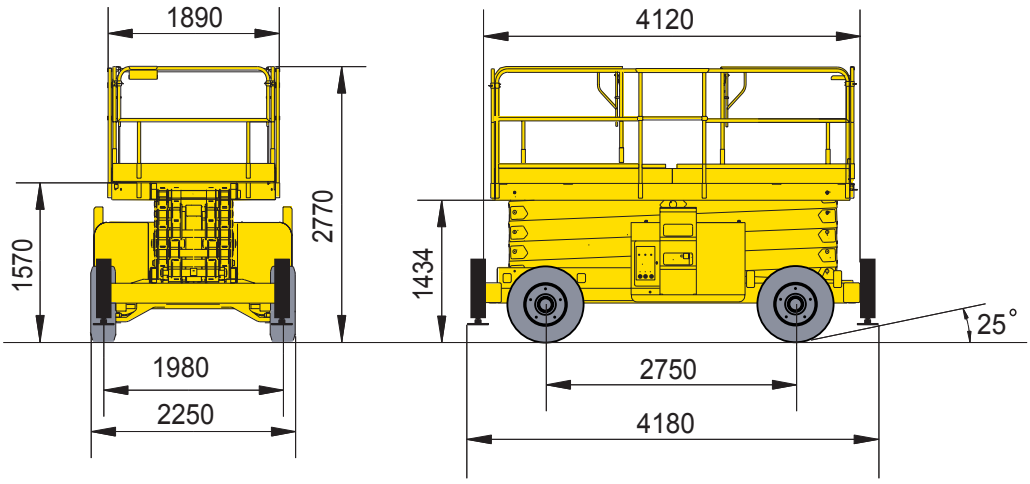

2.4.3 - H18SX

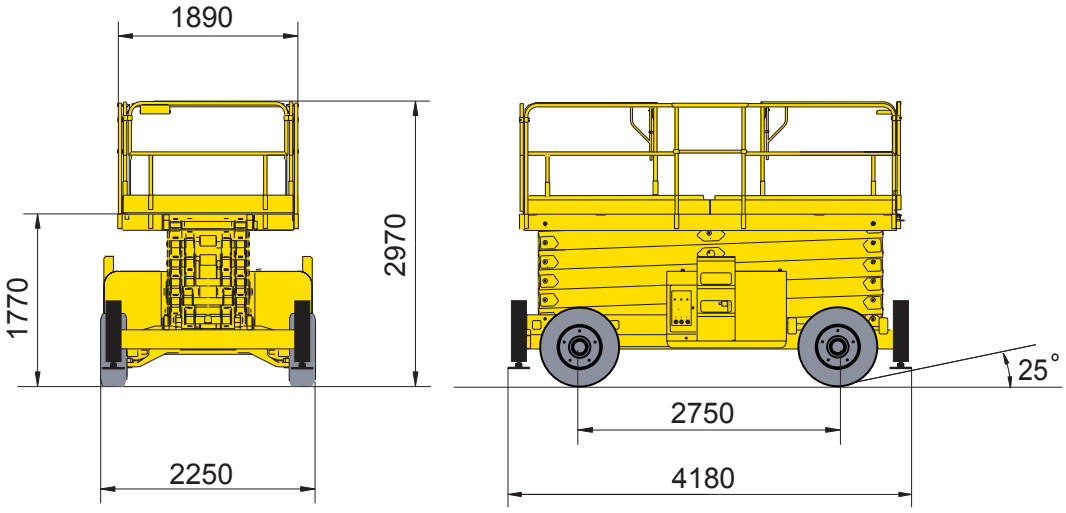

2.5 - CHARACTERISTICS

2.5.1 - Technical characteristics to H12SX

DESCRIPTION	H12 SX	
Working height	12 m	
Max./min. floor height	10 m / 1,37 m	
Overall base width	2,25 m	
Overall platform width	1,89 m	
Overall length	4,12 m	
Overall platform length	4 m	
Useful platform dimensions	3,91 m x 1,81 m	
Overall length with stabiliser option	4,18 m	
Overall max/min. height	11,19 m / 2,57 m	
Floor clearance	0,27 m	
Wheelbase	2,75 m	
External turning radius without stabilisers	4,96 m	
External turning radius with stabilisers	5,90 m	
Internal turning radius without stabilisers	1,54 m	
Internal turning radius with stabilisers	1,79 m	
Total load with double extension (load evenly spread)	700 kg (4 people)	
Maximum side force	40 daN	
Maximum wind speed	45 km/h	
Authorised tilt	5°	
Travel speeds	1.6 km/h at LS, 3.2 km/h at MS, 6 km/h at HS	
Maximum uphill slope	40 %	
Raising time / lowering time when unloaded	43 s / 65 s	
Raising time / lowering time when loaded	60 s / 57 s	
Hydraulic tank capacity	100 L	
General setting hydraulic pressure	240 bars	
Travel setting hydraulic pressure	240 bars	
Lifting setting hydraulic pressure	143 bars	
Hydraulic pump capacity	23 + 4 cm3/rev	
Travel, lifting and stabilising flow	52 L/min	
Steering flow	10 L/min	
Thermal motor:	HATZ - type 2L 41C	PERKINS 403C15
- power	23,1 kW at 2400 rpm	22,3 kW at 2500 rpm
- power at idle speed	11,3 kW at 1200 rpm	
- consumption	238 g/kW/h	260 g/kW/h
- consumption at idle speed	232 g/kW/h	
Diesel tank capacity	65 L	
Number of steering wheels	2	
Number of drive wheels	4	
Differential blocking	YES	
Hydraulic brakes	YES	
Freewheel	YES	
Ignition batteries	1x12 V - 95 A/H	
Supply voltage	12 V	
Solid tyres - dimensions	10 x 16,5"	
Tightening torque of wheel nuts	32 daNm	
Machine mass with double extension without stabilisers	5350 kg	
Max. force on one wheel with nominal load	3500 daN	
Max. ground pressure with 700 kg -hard ground (concrete) -loose ground (mud)	 11 daN/cm^2 6,5 daN/cm^2	
Machine mass with double extension with stabilisers	5510 kg	
Max. force on one stabiliser with nominal load	2740 daN	
Ground pressure on one stabiliser	5,5 daN/cm^2	
Acoustic power	HATZ : 104 dB(A)	PERKINS : 103 dB(A)

2.5.2 - Technical characteristics to H15SX

DESCRIPTION	H15 SX	
Working height	15 m	
Max./min. floor height	13 m / 1,57 m	
Overall base width	2,25 m	
Overall platform width	1,89 m	
Overall length	4,12 m	
Overall platform length	4 m	
Useful platform dimensions	3,91 m x 1,81 m	
Overall length with stabiliser option	4,18 m	
Overall max/min. height	14,19 m / 2,77 m	
Floor clearance	0,27 m	
Wheelbase	2,75 m	
External turning radius without stabilisers	4,96 m	
External turning radius with stabilisers	5,90 m	
Internal turning radius without stabilisers	1,54 m	
Internal turning radius with stabilisers	1,79 m	
Total load with double extension (load evenly spread)	500 kg (4 people)	
Maximum side force	40 daN	
Maximum wind speed	45 km/h	
Authorised tilt	5°	
Travel speeds	1.6 km/h at LS, 3.2 km/h at MS, 6 km/h at HS	
Maximum uphill slope	40 %	
Raising time / lowering time when unloaded	46 s / 57 s	
Raising time / lowering time when loaded	50 s / 57 s	
Hydraulic tank capacity	100 L	
General setting hydraulic pressure	240 bars	
Travel setting hydraulic pressure	240 bars	
Lifting setting hydraulic pressure	174 bars	
Hydraulic pump capacity	23 + 4 cm3/rev	
Travel, lifting and stabilising flow	52 L/min	
Steering flow	10 L/min	
Thermal motor:	HATZ - type 2L 41C	PERKINS 403C15
- power	23,1 kW at 2400 rpm	22,3 kW at 2500 rpm
- power at idle speed	11,3 kW at 1200 rpm	
- consumption	238 g/kW/h	260 g/kW/h
- consumption at idle speed	232 g/kW/h	
Diesel tank capacity	65 L	
Number of steering wheels	2	
Number of drive wheels	4	
Differential blocking	YES	
Hydraulic brakes	YES	
Freewheel	YES	
Ignition batteries	1x12 V - 95 A/H	
Supply voltage	12 V	
Solid tyres - dimensions	10 x 16,5"	
Tightening torque of wheel nuts	32 daNm	
Machine mass with double extension without stabilisers	6180 kg	
Max. force on one wheel with nominal load	3610 daN	
Max. ground pressure with 500 kg -hard ground (concrete) -loose ground (mud)	 12 daN/cm^2 6,5 daN/cm^2	
Machine mass with double extension with stabilisers	6340 kg	
Max. force on one stabiliser with nominal load	3600 daN	
Ground pressure on one stabiliser	7,5 daN/cm^2	
Acoustic power	HATZ : 104 dB(A)	PERKINS : 103 dB(A)
Noise level at 10 meters	HATZ : 69,7 dB(A)	PERKINS : 72 dB(A)

https://truckmanualshub.com/

2.5.3 - Technical characteristics to H18SX

DESCRIPTION	H18 SX	
Working height	18 m	
Max./min. floor height	16 m / 1,77 m	
Overall base width	2,25 m	
Overall platform width	1,89 m	
Overall length	4,12 m	
Overall platform length	4 m	
Useful platform dimensions	3,91 m x 1,81 m	
Overall length with stabiliser	4,18 m	
Overall max/min. height	17,19 m / 2,97 m	
Floor clearance	0,27 m	
Wheelbase	2,75 m	
External turning radius with stabilisers	5,90 m	
Internal turning radius with stabilisers	1,79 m	
Total load with double extension (load evenly spread)	500 kg (4 people)	
Maximum side force	40 daN	
Maximum wind speed	45 km/h	
Authorised tilt	3°	
Travel speeds	1.6 km/h at LS, 3.2 km/h at MS, 6 km/h at HS	
Maximum uphill slope	40 %	
Raising time / lowering time when unloaded	60 s / 60 s	
Raising time / lowering time when loaded	77 s / 60 s	
Hydraulic tank capacity	100 L	
General setting hydraulic pressure	240 bars	
Travel setting hydraulic pressure	240 bars	
Lifting setting hydraulic pressure	160 bars	
Hydraulic pump capacity	23 + 4 cm3/rev	
Travel, lifting and stabilising flow	52 L/min	
Steering flow	10 L/min	
Thermal motor:	HATZ - type 2L 41C	PERKINS 403C15
- power	23,1 kW at 2400 rpm	22,3 kW at 2500 rpm
- power at idle speed	11,3 kW at 1200 rpm	
- consumption	238 g/kW/h	260 g/kW/h
- consumption at idle speed	232 g/kW/h	
Diesel tank capacity	65 L	
Number of steering wheels	2	
Number of drive wheels	4	
Differential blocking	YES	
Hydraulic brakes	YES	
Freewheel	YES	
Ignition batteries	1x12 V - 95 A/H	
Supply voltage	12 V	
Solid tyres - dimensions	10 x 16,5"	
Tightening torque of wheel nuts	32 daNm	
Machine mass with double extension with stabilisers	7300 kg	
Max. force on one wheel with nominal load	4340 daN	
Max. ground pressure with 500 kg -hard ground (concrete) -loose ground (mud)	 16 daN/cm^2 7,5 daN/cm^2	
Max. force on one stabiliser with nominal load	4120 daN	
Ground pressure on one stabiliser	8,5 daN/cm^2	
Acoustic power	HATZ : 104 dB(A)	PERKINS : 103 dB(A)

2.6 - LABELS

2.6.1 - Common "yellow" labels

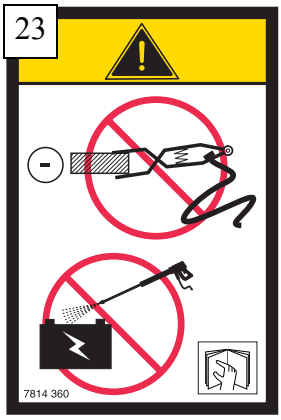

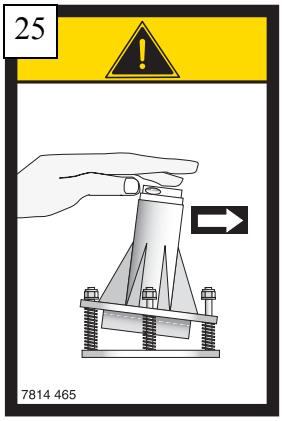

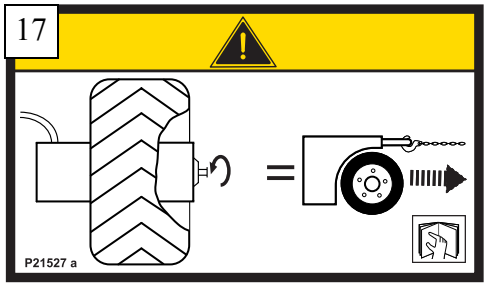

2.6.2 - Common "orange" labels

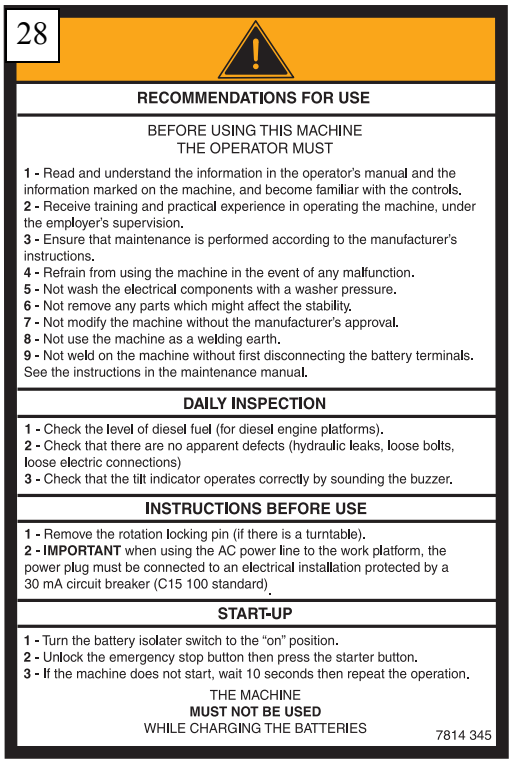
28

RECOMMENDATIONS FOR USE

BEFORE USING THIS MACHINE
THE OPERATOR MUST

1 - Read and understand the information in the operator's manual and the information marked on the machine, and become familiar with the controls.
2 - Receive training and practical experience in operating the machine, under the employer's supervision.
3 - Ensure that maintenance is performed according to the manufacturer's instructions.
4 - Refrain from using the machine in the event of any malfunction.
5 - Not wash the electrical components with a washer pressure.
6 - Not remove any parts which might affect the stability.
7 - Not modify the machine without the manufacturer's approval.
8 - Not use the machine as a welding earth.
9 - Not weld on the machine without first disconnecting the battery terminals. See the instructions in the maintenance manual.

DAILY INSPECTION

1 - Check the level of diesel fuel (for diesel engine platforms).
2 - Check that there are no apparent defects (hydraulic leaks, loose bolts, loose electric connections)
3 - Check that the tilt indicator operates correctly by sounding the buzzer.

INSTRUCTIONS BEFORE USE

1 - Remove the rotation locking pin (if there is a turntable).
2 - IMPORTANT when using the AC power line to the work platform, the power plug must be connected to an electrical installation protected by a 30 mA circuit breaker (C15 100 standard).

START-UP

1 - Turn the battery isolater switch to the "on" position.
2 - Unlock the emergency stop button then press the starter button.
3 - If the machine does not start, wait 10 seconds then repeat the operation.

THE MACHINE
MUST NOT BE USED
WHILE CHARGING THE BATTERIES

7814 345

https://truckmanualshub.com/

2.6.3 - Common "red" labels

22

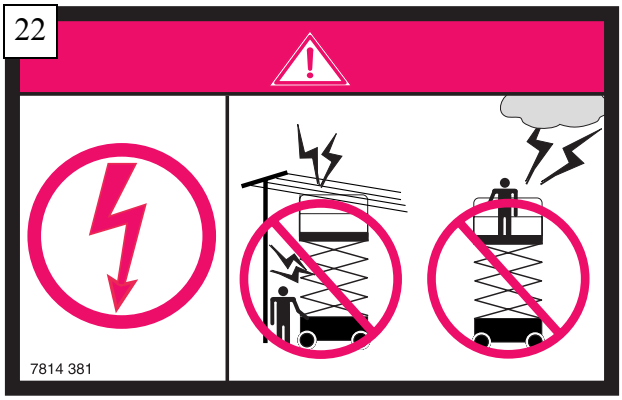

5

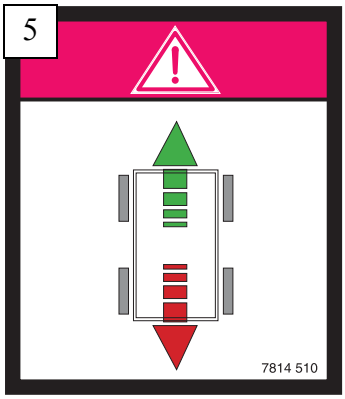

10

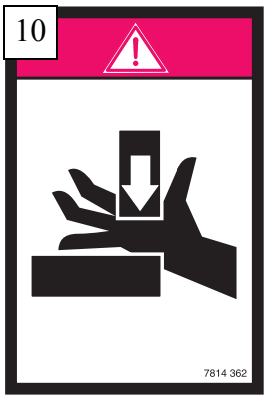

21

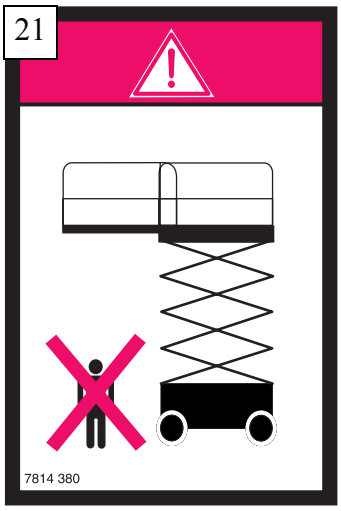

44

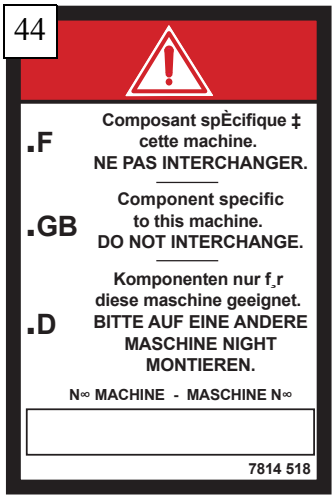

2.6.4 - Other labels

4

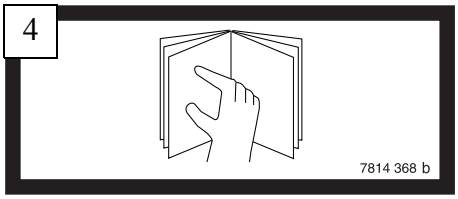

19

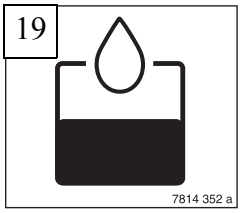

42

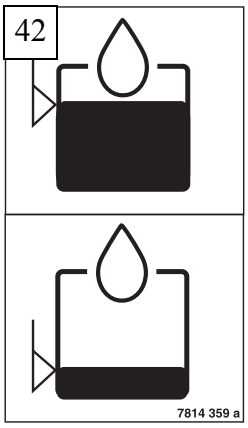

45

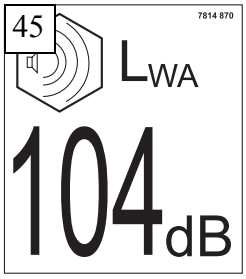

45

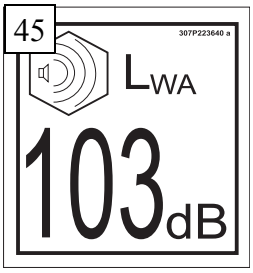

2.6.5 - Model-specific labels

2.6.5.1 -H12SX

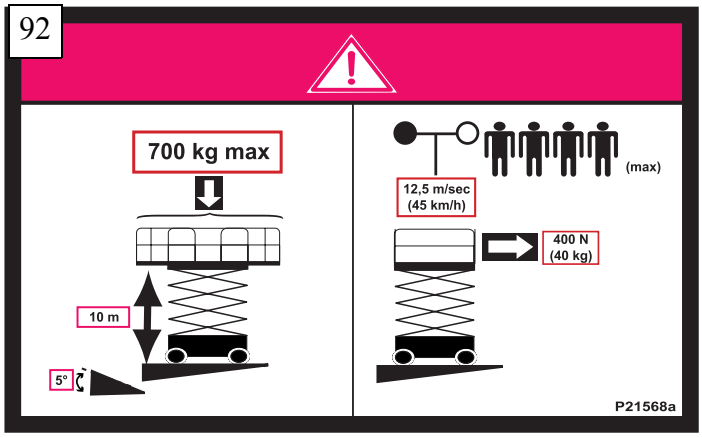

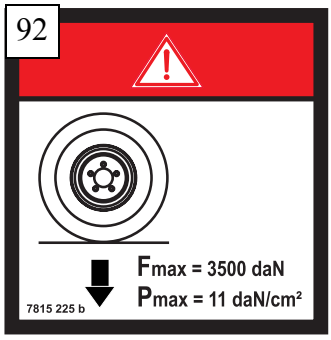

2.6.5.2 -H15SX

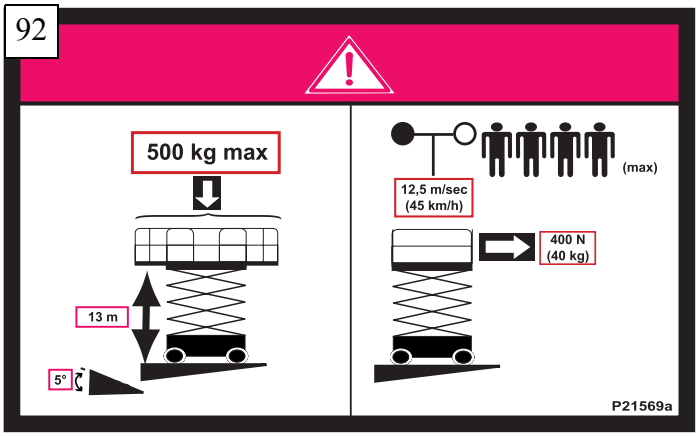

2.6.5.3 -H18SX

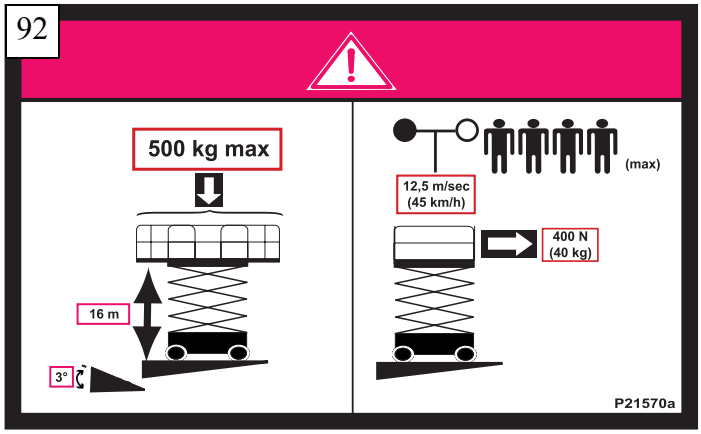

2.6.6 - Specific labels: Option

2.6.6.1 -220V plug

2.6.6.2 -Stabilization of cylinders

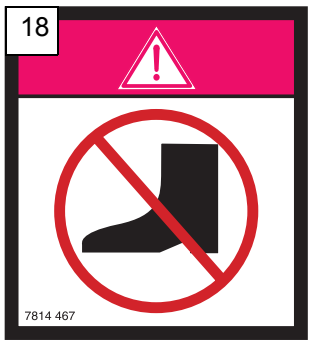

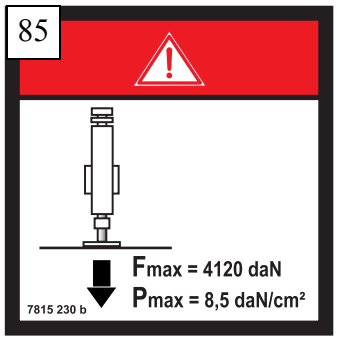

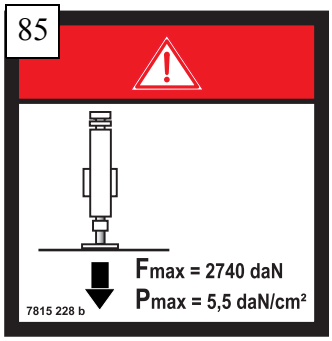

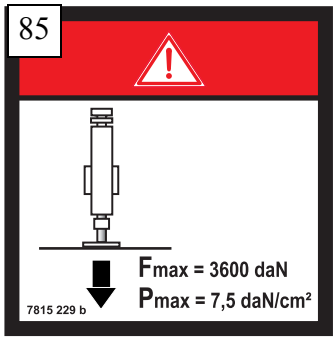

2.6.6.3 -Organic hydraulic oil

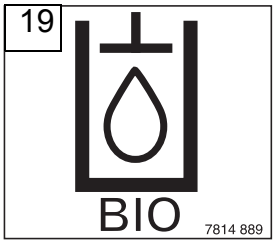

2.6.6.4 -Built-in generator in option

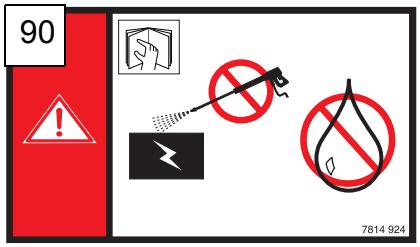

2.7 - MACHINE LABEL REFERENCES

Ref	Code	Qty	Description
1	2420324700	1	SP catalogue H12SX
1	2420324710	1	SP catalogue H15SX
1	2420324720	1	SP catalogue H18SX
2	2420324100	2	CE manual
3	307P215680	2	H12SX floor height + load
3	307P215690	2	H15SX floor height + load
3	307P215700	2	H18SX floor height + load
4	3078143680	1	Read the manual
5	3078145100	2	Travel direction
7	307P217260	1	Top control desk
7	307P217830	1	Emergency stop
8	3078143540	1	Connect to a 220V socket (option)
9	3078150610	2	"H12SX" label
9	3078150620	2	"H15SX" label
9	3078150630	2	"H18SX" label
10	3078143620	2	Danger: Risk of hand crushing
17	307P215270	4	Brake release
18	3078144670	4	Danger : Risk of foot crushing (option)
19	3078143520	1	Hydraulic oil
19	3078148890	1	Organic hydraulic oil (option)
20	307P217230	2	Haulotte design
21	3078143800	2	No stopping in the working area
22	3078143810	1	Danger: Risk of electrocution
23	3078143600	2	Do not use as a welding station
24	307P217490	1	Bottom control desk (HATZ engine)
24	307P222990	1	Bottom control desk (PERKINS engine)
25	3078144650	1	Risk of overturning : check tilt
26	307P218080	1	Manufacturer’s plate (English)
27	307P216130	1	Stop time during downward movement
28	3078143450	1	Operating instructions (English)
29	3078145720	2	Load capacity on extension (Holland)
30	2421808660	1	Yellow and black adhesive marking
41	3078144970	1	Heat burn danger
42	3078143590	1	High and low level hydraulic oil
43	3078143640	2	Do not stand on the cover
44	3078145180	1	Do not interchange
45	3078148700	1	Acoustic power (HATZ engine)
45	307P223640		Acoustic power (PERKINS engine)
85	3078152280	4	Max. force on one stabiliser with nominal load - H12SX
85	3078152290	4	Max. force on one stabiliser with nominal load - H15SX
85	3078152300	4	Max. force on one stabiliser with nominal load - H18SX
90	3078149240	1	Do not use a water jet near the on-board generator (option)
91	3078150500	1	On-board generator On/Off button
92	3078152250	4	Max. force on one wheel with nominal load - H12SX
92	3078152260	4	Max. force on one wheel with nominal load - H15SX
92	3078152270	4	Max. force on one wheel with nominal load - H18SX

2.8 - POSITION OF LABELS ON THE MACHINE

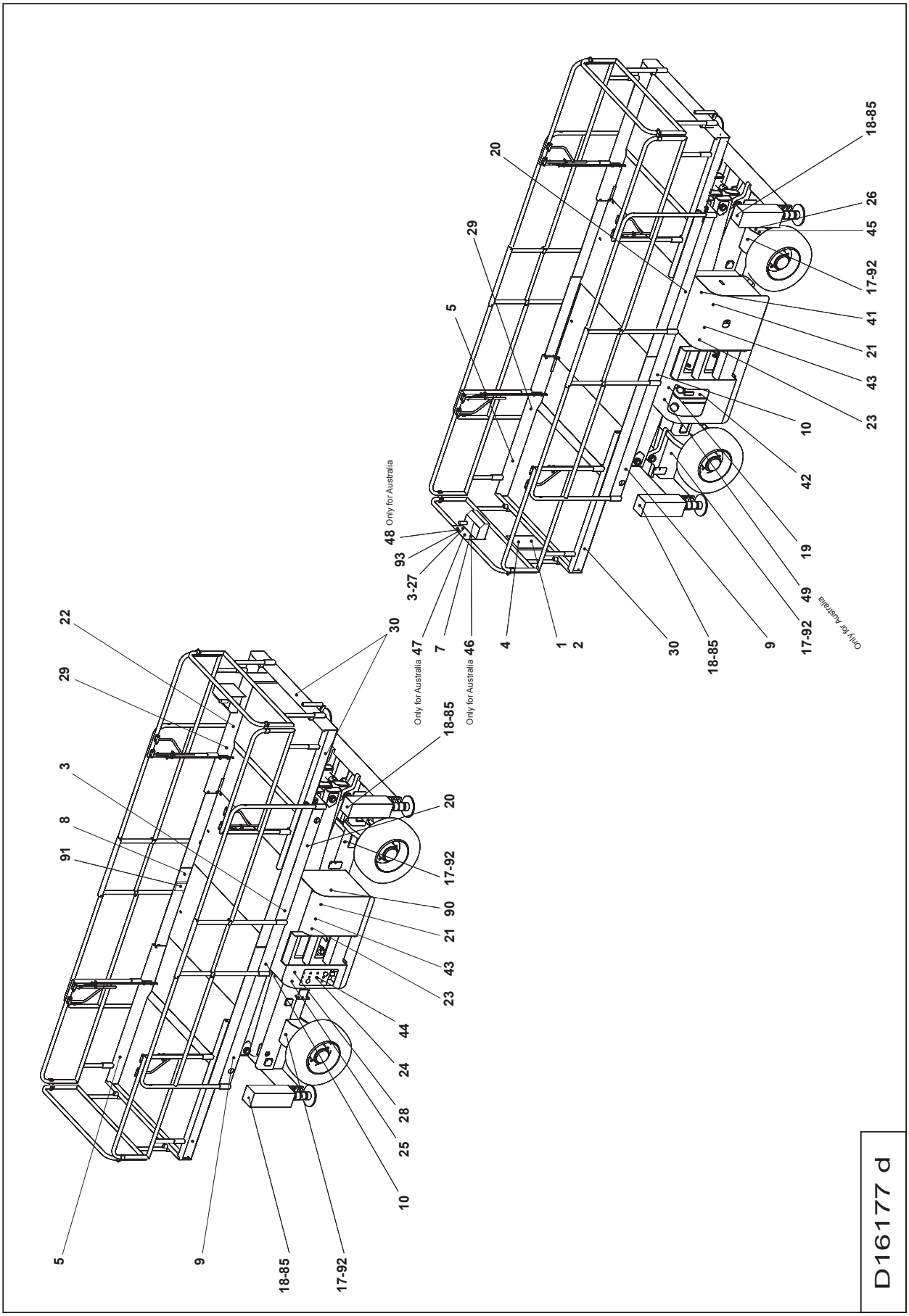

3 - OPERATING PRINCIPLE

3.1 - HYDRAULIC CIRCUIT

All the machine's movements are powered by hydraulic energy supplied by a gear pump driven by a thermal motor.

In the event of a breakdown, manual back-up action enables the scissors to be lowered.

A high pressure filter mounted on pump discharge protects the installation from pollution.

3.1.1 - Scissor lifting, travel movements, stabilising movements

These are controlled by on/off distributors via a proportional control distributor which gives progressiveness of movement.

Only one movement at a time is possible.

3.1.2 - Steer movement

This is controlled by an on/off electrovalve supplied by the small pump body.

3.1.3 - Scissor lifting cylinder

This is equipped with a valve flanged on the body.

Caution !

Adjustment can only be carried out by specialised personnel. Altering the settings may cause malfunction of the machine's safety devices, and consequently risks of serious accidents.

3.1.4 - Brake release of the wheel reducers during travel

Whenever a travel movement is ordered, the brake release circuit for the reducers mounted on the fixed axle is pressurised.

As soon as movement stops, or if there is a lack of pressure, the brake is re-applied.

3.2 - ELECTRIC CIRCUIT AND OPERATING SAFETY SYSTEMS

3.2.1 - General

The electric power used to control and start the thermal motor is supplied by a 12 V battery.

Caution !

Do not order movements before reading and understanding the instructions in Chapter 4, page 27.

To prevent use of the machine in excess of its capacity, safety systems are provided to protect personnel and the machine. They immobilise the machine or disable movements.

In such cases, insufficient knowledge of the machine's characteristics or operation may result in diagnosing a failure, whereas it is merely correct operation of the safety systems. It is therefore essential to assimilate all the instructions in the following chapters.

If emergency or rescue operation is required, the safety systems are disabled.

3.2.2 - Automatic motor stop

The motor is automatically stopped if oil pressure is too low, ref. 1, Photo 3, page 31 is on.

3.2.3 - Load check

When this maximum load is reached, the platform panel's overload light indicator comes on and a buzzer sounds to alert the operator. The control circuit is automatically broken, disabling all movements. Load must be removed to reset.

3.2.4 - Tilt check

The tilt detector emits a sound if maximum authorised tilt is reached.

	Maximum tilt
H12SX	5°
H15SX	5°
H18SX	3°

If this situation persists after a time delay of 1-2 seconds, the scissor up movement is disabled and travel movement is disabled as long as the machine is extended. To restore the travel movement, all scissor arms must be folded.

3.2.5 - Travel speed

To move the machine, the "fail-safe" safety system must be activated by holding down the manipulator button. Release of the fail-safe causes travel to stop.

3.2.5.1 -Transport position (scissors folded)

The three travel speeds are available if the machine is completed folded.

Speed should be adapted to the environment (obstacles, bends, etc.).

3.2.5.2 -Working position (scissors unfolded)

As soon as the machine leaves its transport position (floor height > 2,95m) :

- only micro-speed is available,
- travel is disabled if tilt exceeds the maximum authorised limit.

NOTA : In travel, scissor lifting is impossible.

To approach an obstacle, use command proportionality.

3.2.6 - Hour counter

An hour counter indicates how long the thermal motor has been in operation.

3.2.7 - HEAD computer

Caution !
It is forbidden to interchange your machine's calculator with that of another machine.

Each machine is equipped with a specific calculator, set according to the machine's functions. If the calculator is replaced or interchanged without the prior agreement of a PINGUELY-HAULOTTE technician, the machine could seriously malfunction.

An anti-tamper label is placed on the calculator. If, during an after sales service return or while work is being performed by a Pinguely Haulotte technician or agent, we discover that the label has been torn or is faulty or if the label does not correspond to the machine in question, we shall not be able to apply the calculator's manufacturer's warranty nor the machine's warranty.

https://truckmanualshub.com/

3.2.7.1 -HEAD computer battery

The end of the HEAD calculator's battery's life is signalled through the simultaneous flashing of two (or three, if appropriate) indicators on the lower console as soon as the machine is powered on.

Caution !
Nevertheless, the flashing of the indicators can be suspended if the indicator has to return to its initial function and warn of a malfunction.

These light indicators are:

- Motor oil pressure
- Motor temperature (according to the type of machine)
- Clogging indicator (according to the type of machine)

As soon as low battery power is detected, please contact our After-Sales department immediately.

4 - USING THE MACHINE

4.1 - GENERAL INSTRUCTIONS

Your scissor type platform is mobile.

All the movements are controlled from a control box situated on the platform's extension. This is the main operating station; the control box situated on the chassis is an emergency assistance and rescue station.

Caution !
Do not use the machine if the wind speed exceeds 45 kph.

Caution !
Do not carry out any operations before reading the instructions in Chapter 4.3, page 29.

To avoid any risk of accident, if you try to use the machine above its capabilities, safety devices are provided to protect personnel and the machine.

They immobilise the machine or neutralise its movements. In this case inadequate knowledge of the machine's characteristics and operation can lead one to believe that there is a breakdown when in fact it is the safety devices which are working properly.

It is therefore essential to understand all the instructions in the following chapters.

4.1.1 - Movement

REMINDER :The lift is designed to work on hard ground whose slope or tilt does not exceed the maximum tilt specified. Beyond this, the buzzer sounds if the machine is unfolded. Travel is possible if the machine is folded.

The machine cannot be moved if it is overloaded. In this case, it is immobilised.

In the low position, models H12SX, H15SX and H18SX can be driven at their three travel speeds.

Movement with the platform in the raised position (floor height > 2,95m) must be on hard, flat and horizontal ground only without any obstacles or holes. Only micro travel speed is then possible.

It is impossible to raise the platform and travel simultaneously.

Caution !
If an emergency assistance or rescue operation is necessary, the safety devices are neutralised and only a skilled operator can carry out these operations.

4.1.2 - Filling the fuel tank

Make sure, before any filling operation, that the fuel is that recommended and that it is stored properly to avoid pollution.

Do not pump from a drum if the latter is not decanted and never use the bottom.

Because of fire risks during tank filling, take the following precautions:

- do not smoke,
- switch off the thermal motor if it is on,
- stand upwind so as not to be sprayed with fuel,
- with the pump's pouring spout, touch the outside of the filling hole before starting to fill up, so as to avoid the risk of sparks due to static

electricity,
- replace the tank filler cap properly and clean off any fuel which has run outside the tank.

4.2 - OFFLOADING – LOADING – MOVEMENT

IMPORTANT: Before any operation, check the condition of the machine to make sure that it has not been damaged during transport. If it has, make the necessary reserves with the carrier in writing.

Caution !
Incorrect operation can cause the machine to fall and cause very serious bodily injury and material damage. Carry out offloading operations on a stable, sufficiently resistant, flat and uncluttered surface.

4.2.1 - Offloading with ramps

Make sure that:
- The machine is totally folded.
- The ramps can support the load and that adherence is sufficient to avoid any risk of slipping during operation and that the ramps are correctly fixed.

Caution !
Never stand underneath or too close to the machine during operation.

IMPORTANT: Since this method requires the machine to be switched on, refer to Chapter 4.3, page 29 to avoid any risk of incorrect operation. **Select low travel speed.**

NOTA : If the slope exceeds the maximum authorised limit in travel (see Chapter 2.5, page 13), use a hoist to assist traction or restraint.

Caution !
Always go down ramps at low speed.

4.2.2 - Loading

The precautions are identical to the offloading precautions.

The machine must be secured in accordance with the sketch below :
- The machine must be in transport position,
- The guardrails must be locked,
- The extensions must be locked,
- It is imperative to use the points of bearing destined for this purpose.

To go up a lorry's ramps, **select low travel speed**.

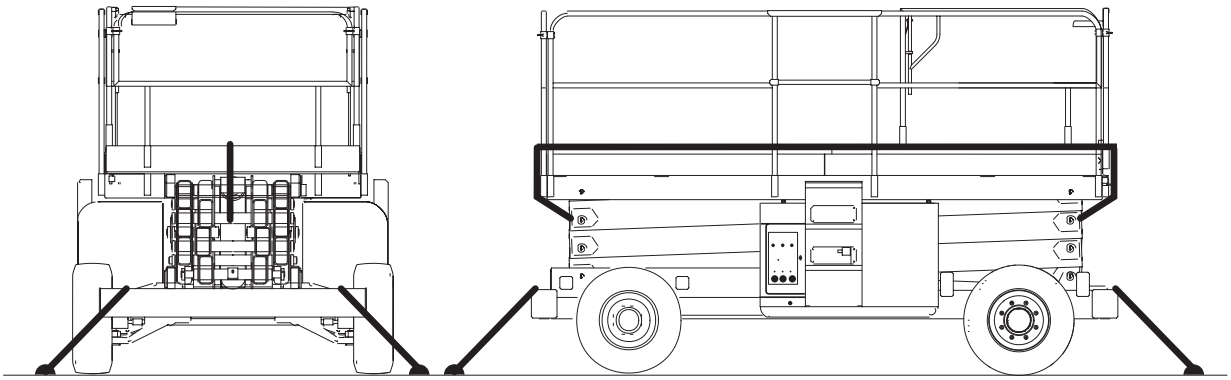

Drawing: Securing the machine

https://truckmanualshub.com/

4.2.3 - Travel

Comply carefully with the traffic instructions or regulations in machine movement areas.

On uneven ground, check out the route before beginning high work.

Always keep a safe distance away from unstable edges or banks.

Make sure that there is no one in the immediate vicinity of the machine before carrying out a movement or travel operation. Be particularly vigilant if the machine is extended, as visibility is reduced.

REMINDER :It is forbidden to travel on the public highway.

4.3 - OPERATIONS BEFORE FIRST OPERATION

Each platform is subjected to permanent quality checks during its manufacture.

Transport may cause damage, which must be reported to the transport company for any claim before the first operation.

Caution !
During high-pressure cleaning, do not direct the jet on the electric boxes and cabinets.

REMINDER: Before any operation, learn about the machine by reading this manual and the instructions on the various plates.

4.3.1 - Platform control station

Photo 1

Photo 2

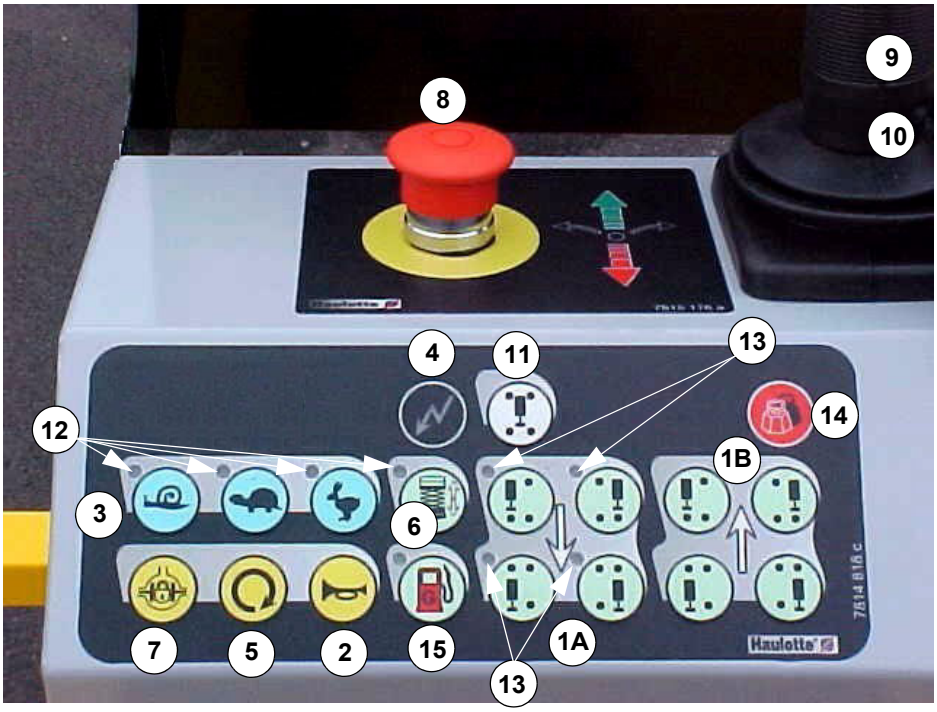

1A- Stabilisers extend controls	**8 - Emergency stop button**
1B- Stabilisers retract controls	**9 - Movement control manipulator**
2 - Audible warning control	**10 - Fail-safe**
3 - Travel speed selection	**11 - Centralised stabiliser control**
4 - Power on indicator	**12 - Indicators : Movement selection**
5 - Thermal motor ignition	**13 - Indicators : Stabiliser state**
6 - Up / down selector switch	**14 - Overload light indicator**
7 - Differential blocking	**15 - Diesel / LPG selection switch**

4.3.2 - Chassis control station

NOTA : The functions are described for the entire range. Refer to the machine configuration to identify the functional controls and indicators.

Photo 3

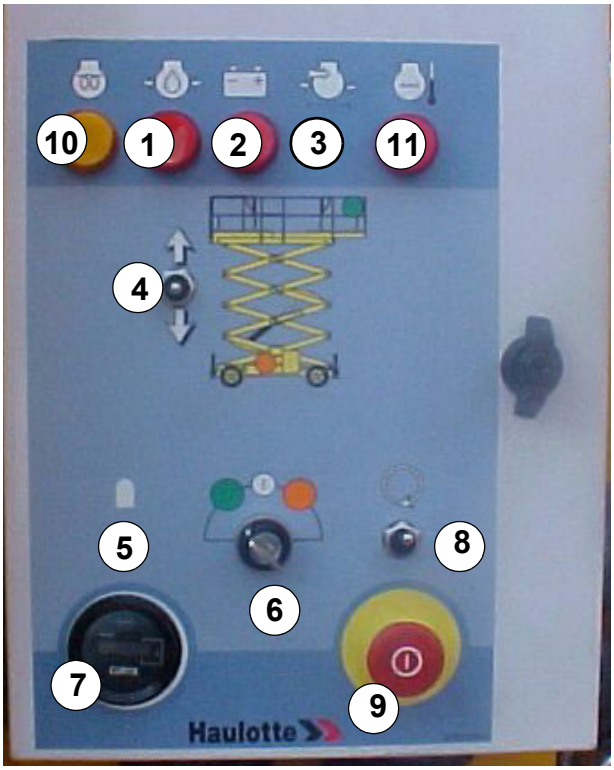

Description	Machine equipped with HATZ engine	Machine equipped with PERKINS engine
1- Oil pressure	Used	Used
2- Battery charge light indicator	Used	Used
3- Air filter clogging light indicator	Used	Not Used
4- Platform up/down control button	Used	Used
5- Flashing light control (option)	Used	Used
6- Station selection (chassis or platform)	Used	Used
7- Hour counter	Used	Used
8- Thermal motor start	Used	Used
9- Emergency stop button	Used	Used
10- Engine preheating indicator	Option	Used
11- Coolant temperature	Not Used	Used

4.3.3 - Fitting the guard rails

The machine is supplied with the guard rails not fitted. It is therefore necessary to position and fix them using the pins (arrows on Photo 4, page 32).

Caution !
Please make sure that safety bar is properly closed before using the machine in any way.

Make sure that the safety bar (item 1, Photo 5) slides freely to permit access to the platform.

Photo 4

Photo 5

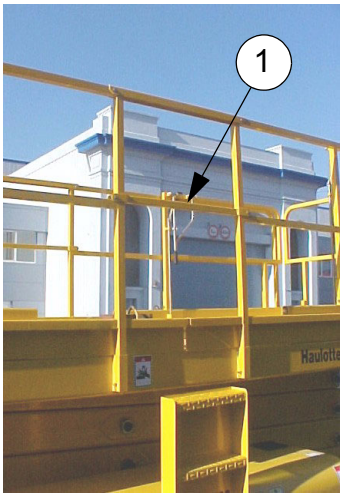

4.3.4 - Checks before any operation

Before any operation, the machine must be visually inspected.

4.3.4.1 -General mechanical appearance of the machine

- Visual inspection of the whole machine: chipped paint, missing or loose parts or battery acid leaks must attract your attention.
- Check that there are no slack bolts, nuts, connectors and hoses, no hydraulic oil leaks, no cut or disconnected electric conductors.
- Check the wheels: no nuts loose or missing.
- Check the tyres: no cuts or wear.
- Check the lifting and steering cylinders: no evidence of damage, oxidation or foreign bodies on the rod.
- Inspect the platform and the scissor arms: no visible damage, wear or deformation.
- Check the steering axle: no excessive wear on the pivot pins, no loose or missing parts, no deformation of visible cracks.
- Check the condition of the control box's power cable.
- Check that there is a manufacturer's plate, warning labels and user manual.
- Check the condition of the guard rails and sliding access bar.
- Please inspect fulcrums (check that stoppers are in place and that the welding around these axles is in good condition).

4.3.4.2 -Machine environment

- Check that a serviceable fire extinguisher is close to hand.
- Always work on hard ground capable of supporting the maximum load per wheel.
- Do not use the machine in a temperature below -15°, particularly in a cold store.
- Wipe any trace of oil or grease off the floor, ladder and hand rails.
- Make sure that there is no-one in the immediate vicinity of the machine before raising or lowering the platform.
- Make sure that no obstacle can interfere with the:
  - travel (machine movement)

- platform raising movements.

NOTA : *See “work area” sketch (Chapter 2.3, page 9).*

4.3.4.3 -Hydraulic system

- Check the pump and the hydraulic control block: no leaks, components properly fixed.
- Check the hydraulic oil level (item 1, Photo 6, page 33).

4.3.4.4 -Thermal motor

- Remove the cover held by 4 clips and make sure that the fuel pre-filter does not contain any water or impurities. Clean if necessary.

Caution !
Let the engine cool down before opening the radiator plug.

- Check the fuel level through the ports under the filler cap (item 2, Photo 6 and item 2, Photo 8, page 33).
- Check the engine oil level (Photo 7 and Photo 9) : max. mark on the gauge.
- Check the coolant level (Photo 9).

Photo 6 : HATZ engine

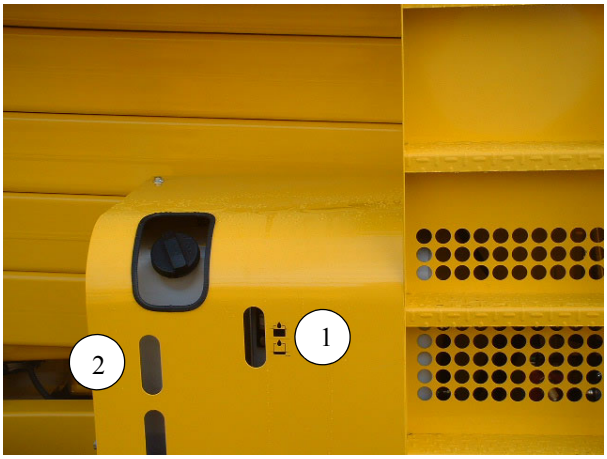

Photo 7 : HATZ engine

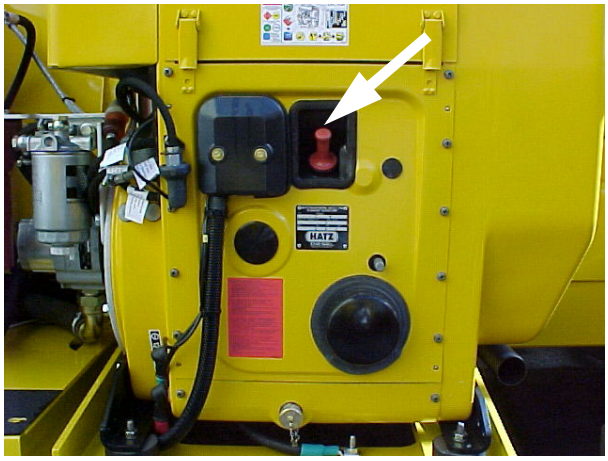

Photo 8 : PERKINS engine

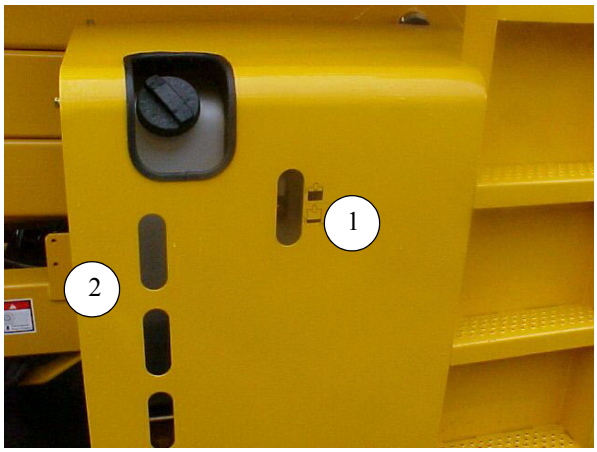

Photo 9 : PERKINS engine

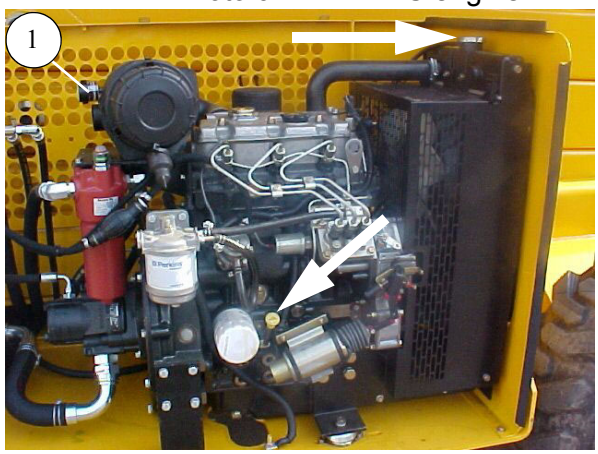

NOTA : *If there is a risk of water and/or impurity particles accumulating in the fuel tank, it is recommended to use the engine with a pre-filter reinforced filtration system incorporating a settling system. If in doubt, contact HAULOTTE Services.*

4.3.4.5 -Batteries

- Check the cleanness and tightness of the battery terminals (loose terminals or corrosion cause loss of power).

4.3.4.6 -Safety devices

- Check operation of the control box emergency stop buttons (item 8, Photo 2 and item 9, Photo 3, page 31).
- Check operation of the tilt sensor by operating it (with the red emergency stop button unlocked), the buzzer should sound when the machine's limit angle is reached.
- Check that the limit switches are free from any foreign body.
- Check operation of the visual and audible alarms.

  IMPORTANT: If the machine has a 220 volt power point/plug (option), the extension cable must be connected to a mains socket protected by a 30 mA quick-trip circuit-breaker.

Caution !
These machines are not isolated and must not be used near power lines.

4.4 - OPERATION

IMPORTANT: The machine must only be put into service once all the verification operations have been finished.

4.4.1 - Operations from the ground

Photo 10

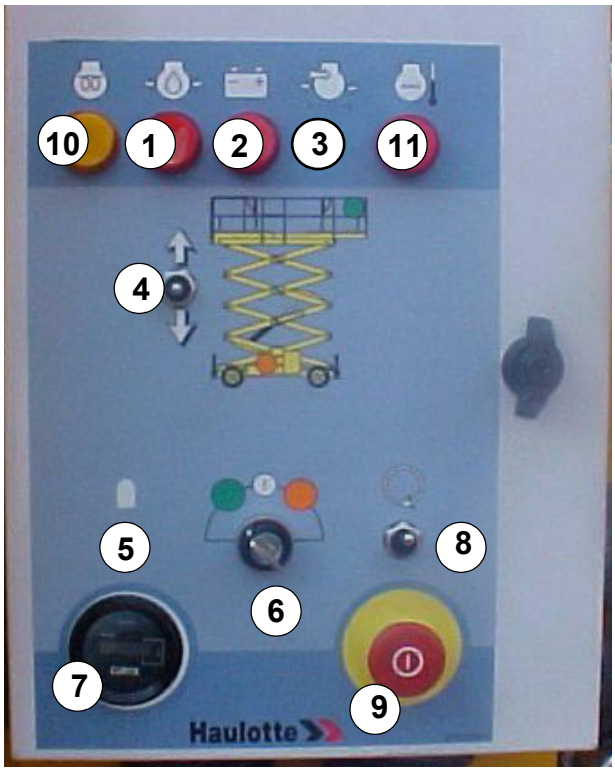

Starting the engine:

- Make sure the stop button (item 9, Photo 10, page 34) is pulled out.
- Keep operating cab selector switch (item 6, Photo 10, page 34) on "ground control" position (orange button). In this position, the "platform" controls are disabled.

- The indicator lights for motor oil pressure (item 1) and battery charging (item 2) are on. The air filter clogging indicator light (item 3) is off.

REMINDER :Machines equipped with a PERKINS engine are equipped with a mechanical air filter clogging indicator (item 1, Photo 10, page 34). Refer to the engine manufacturer's manual.

- Press the start button (item 8). Once the engine has started, the lights go out.

Engine preheating for equipped machines:

- The motor oil pressure (item 1) and battery charge indicators (item 2) are lit. The preheating indicator (item 10) lights up when the machine is started.
- When the preheating indicator has gone off, press the ignition button (item 8) ; the engine will start and the indicators will go off.

NOTA : If the engine does not start, switch off the ignition and start the operation again. Check that the two emergency stops are unlocked.

- Let the engine warm up, and use the time to check that the hour-meter (item 7), motor and pump and working properly.

Caution !
Do not use starting aid products. Leave the engine to warm up for a few minutes before loading the platform.

Stopping the motor:

- Press the mushroom-headed switch. Locking this switch stops the thermal motor and prevents any control from the platform.
- It must be unlocked to be able to use the controls again.

NOTA : While the platform is in use, the motor must be started and stopped from the platform control panel.

Movement test:

REMINDER :Ensure that no obstacle can interfere with movement before any operation.

- Up movement control automatically accelerates the motor.
- Test the lifting movement in the up and then down direction.

Switch to "platform" control:

- Put the key selector switch in the "platform" position (green circle).
- Check proper operation of the tilt sensor.

4.4.2 - Operations from the platform

Caution !
Before any operation, check that the required movement has been selected.

4.4.2.1 -Recommendations

- Do not move the machine unless the safety barriers are correclty installed and the safety access bar is lowered.
- Pay attention to reduced visibility conditions and blind spots when driving and moving.
- Be careful of the correct positioning of the extended platform when moving the machine.

- We strongly recommend that operators wear approved helmets when moving the machine.
- Inspect the working area to identify overhead obstructions or other possible dangers.
- Do not perform any acrobatics on the machine. Do not climb and sit on the guardrails of the machine.
- Adapt movement speed according to the condition of the floor, traffic, slope position of people or any other factor that may cause a collision.
- Do not move the machine in the passageway of a crane or any other overhead machine unless the crane's controls have been locked and/ or precautions have been taken to avoid collisions.

First, check that the on-board load is within the maximum load limits and that it is evenly distributed.

PLATFORM H12SX	Total load : 700 kg Maximum number of persons : 4
PLATFORM H15SX	Total load : 500 kg Maximum number of persons : 4
PLATFORM H18SX	Total load : 500 kg Maximum number of persons : 4

NOTE: During platform use, the motor will be started and stopped from the platform control desk.

Ensure that the protective bar is properly closed and that the green power light indicator is on.

4.4.2.2 -Operating instructions

Photo 11

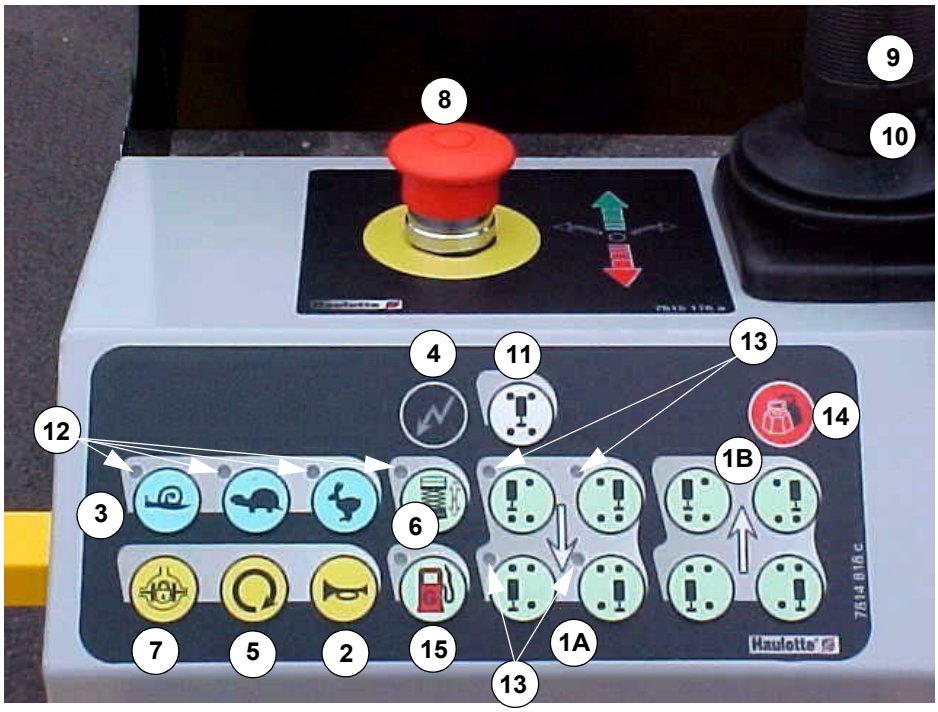

Motor start - stop

Start:

- Unlock the palm button (ref. 8) by turning it 90°.
- Press the ignition selector switch (ref. 5).

Stop:

- Push the palm button (ref. 8).

Control station test

- Ensure that the palm button (ref. 8) is unlocked,
- Ensure that the green light (ref. 4) is on before making any movement. This means that the machine power is on and that the selector switch is in the "plaform" position,
- Check that the buzzer (ref. 2) works properly.

Travel

- Press the required travel speed selector (ref. 3). The corresponding light indicator (ref. 12) comes on.
- Press the fail-safe (ref. 10) and activate the manipulator (ref. 9) in the required direction of movement within 10 seconds of making the selection. After 10 seconds, the light indicator goes out and travel is no longer validated.

NOTE: Move the manipulator slowly : gradual manipulation = gradual movement.

Do not go through neutral without pausing. Any action on the manipulator automatically causes acceleration of the motor regime.

Steering

After selecting travel, left/right steering is controlled by activating the corresponding buttons on the manipulator.

Differential blocking (after selecting low and medium speed travel).

Press the selector switch (ref. 7) to block the differential. Releasing the button releases the blockage.

NOTE: Do not make large movements with the differential blocked. Do not steer with the differential blocked.

Lifting

- Press the up selector switch (ref. 6). The corresponding pilot light (ref. 12) comes on.
- Activate the manipulator in the required direction of movement within 10 seconds of making the selection.
- Do not go through neutral without pausing.

Any action on the manipulator causes automatic acceleration of the motor regime, except for the down movement.

Caution !
At the end of the down movement, an "anti-shearing" protection system eliminates the risk of shearing when the scissors fold up fully.

Platform lowering is mainly controlled by the manipulator to a position corresponding to a minimum space between the arms of 50 cm, thus avoiding the risk of "crushing".

To continue lowering:

- Release the manipulator for four seconds, then continue the movement.
- During this period, the buzzer sounds for safety reasons.
- During lowering, there is no motor acceleration.

Caution !
Any movement selected is cancelled automatically if the user does not use the function for 10 seconds.

Stabilisers (option): See Chapter 4.9, page 41.

4.5 - MANUAL EXTENSIONS

Photo 12

Conditions of use.

To extend or retract the extension, grab the 2 handles provided for this purpose, lift them to 90 and push them in the direction of the movement required. Lifting the handles by 90 automatically disengages the extension's position holding bolts (item 1, Photo 12). During transport on a trailer or vehicle, and during work, the manual extension or extensions must be locked.

Check that the bolts are properly engaged when the handles are returned to their original position so as to avoid an unwanted retraction or extension.

In order to facilitate the pushing out and the drawing in of the extensions, it is recommended that a load of 200kg for each of the extensions should not be exceeded.

4.6 - RESCUE LOWERING

Caution !
Only a competent operator may perform emergency assistance or rescue operations.

This is the case in which the operator on the platform is no longer able to control the movements, even though the machine is functioning as normal. A competent operator on the ground may operate the control station at the base-frame with the main power supply to bring the operator on the platform back down.

Photo 13

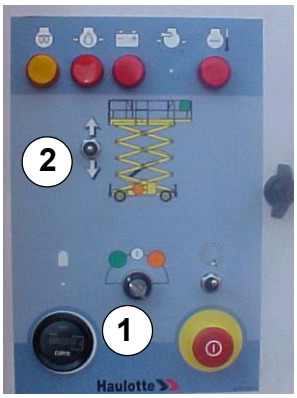

Procedure:

- place the key selector from selection of control station to position "ground control" (no. 1, Photo 13, page 38). In this position the controls of the control station at the platform will be cancelled.
- Continuing to hold the key (on the chassis side), lower the platform using the switch provided (no. 2, Photo 13) if you need to help the person on the platform.

REMINDER :During rescue and emergency assistance operations from the ground with the extension up, ensure that there are no obstacles under the platform (wall, cross-bar, electric line, etc.).

4.7 - EMERGENCY ASSISTANCE LOWERING

If an operating fault prevents the operator on the platform from coming back down, a competent operator may bring the platform back down from the control station at the base-frame.

On the H12SX and H15SX (Photo 15):

- Recover the chain wound around the step (Photo 14, page 39).
- Fix the end equipped with a hook to the control lever of the electro-valve.
- Pull moderately on the chain, the platform comes down under the effects of gravity.
- Release the chain to stop the downward movement.
- After the emergency operation, put the chain back.

Photo 14

Photo 15

On the H18SX (Photo 16):

- Pull on the valve's control to enable lowering of the platform.
- Release to stop platform lowering.

Photo 16

REMINDER :During rescue and emergency assistance operations from the ground with the extension up, ensure that there are no obstacles under the platform (wall, cross-bar, electric line, etc.).

Caution !
It is prohibited to lower overloads using the emergency lowering control.

For all machines equipped with the "Protection" option, this optional system must be dismounted to enable access to the emergency control, but be aware of the risks of crushing.

4.8 - UNCOUPLING

It is possible to uncouple the reducing gears on the drive wheels to be able to tow the machine if it breaks down.

Caution !
In this configuration, the machine is no longer braked.

Uncoupling procedure:

Undo central screw (ref. 1, Photo 17) to the end, but do not force it. Now the machine is uncoupled.

Caution !
To tow the machine, it is essential to use a rigid bar and not to exceed 5 kph.

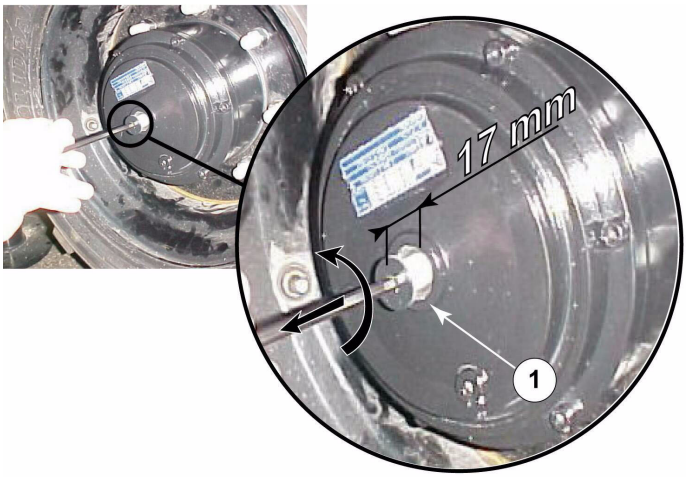

Photo 17

Coupling procedure:

Caution !
The coupling of gear motors must be carried out by competent operators.

- Machines with stabilisers:
  - Reassemble the machine upon stabilisers.
  - Put central screw back on without forcing it to engage the gear clutches. If you note any resistance, move the wheel so that its teeth connect with those of the gear clutches.
  - Once the gear clutches have connected, tighten central screw to the end.

Caution !
This operation is to be carried out on even ground.

- Machines without stabilisers:

Caution !
As long as the 4 gear clutches are not in place, the machine does not slow down properly.

  - Put central screw back on without forcing it to engage the gear clutches. If you note any resistance, very gently activate the control for translation into low gear.
  - Once the gear clutches have connected, tighten central screw to the end.

4.9 - STABILISERS

A set of four cylinders fixed to the chassis, controlled from the platform control panel, enables the machine to be levelled. A spirit level in the platform enables the operator to check machine horizontality.

The selector switches (ref. 1A, Photo 11, page 36) control stabiliser cylinder extension.

The selector switches (ref. 1B, Photo 11, page 36) control stabiliser cylinder retraction.

These selector switches can be used to control 1, 2, 3 or 4 cylinders at the same time for a same movement (up or down).

Caution !
The stabilisers must always be adjusted while the platform is in the low position. The four cylinders must be in position on the ground.

Stabiliser extension:

- Activate the stabiliser buttons (ref.1A, Photo 11, page 36).
- Activating the four buttons at the same time slows down stabiliser extension.
- When an cylinder is extended, the buzzer sounds. The light indicator corresponding to the stabiliser (ref. 13):
  - flashes quickly if the cylinder is extended but not in contact with the ground,
  - remains on if the cylinder is extended in contact with the ground,
  - flashes slowly if the cylinder is totally extended.
- Platform lifting is authorised if the machine is stabilised (all four light indicators on fixed).

Stabiliser retraction:

- Activate the stabiliser buttons (ref. 1B, Photo 11, page 36).
- Hold selection 1B down until the light indicator corresponding to stabiliser 1A (ref. 13) goes out. Extinction of this light indicator means that the cylinder is fully retracted.
- Activating the four buttons at the same time slows down stabiliser retraction.

NOTE: Stabilisers are lowered with the motor accelerated. The stabilisers are raised with the engine at idling speed for machines equipped with HATZ engines and at accelerated speed for PERKINS engines.

Caution !
Travel movement is disabled unless all four stabiliser cylinders are retracted (all four light indicators are out).

Caution !
If one of the cylinders is fully extended without coming into contact with the ground, it is impossible to raise the platform.

The machine is equipped with 3 safety systems:

- Travel functions are deactivated until all four cylinders are fully retracted.
- To change the position of a cylinder, the platform must be lowered.
- The platform "lift" function is only possible if the four cylinders are in contact with the ground or all retracted (all light indicators on or all off).

CENTRALISED STABILISER (Ref. 11, Photo 11, page 36)

When the platform is in low position, the locking and automatic horizontal setting of the lifting-platform can be performed by simply pressing the selector switch. "Central locking" (rep. 11).

Stabiliser lowering

- Hold down the centralised stabiliser selector switch until the motor accelerator and buzzer stop, which corresponds to a correct stabilised position, visualised by the four light indicators of the stabilisers coming on fixed (ref. 13).

Stabiliser raising

- Activate the stabilser buttons (ref. 1B, Photo 11).
- Hold selector switch 1B down until the light indicator corresponding to stabiliser 1A (ref. 13) goes out. Extinction of this light indicator means that the cylinder is fully retracted.
- Activating the four buttons at once means that the stabilisers rise more slowly.

At any time, the operator can stop or continue the centralised stabilising cycle by holding down or releasing the control button (ref. 11).

On rough terrain, it is sometimes preferable to stabilise manually.

4.10 - ON-BOARD GENERATOR (OPTION)

Caution !
Do not expose the on-board generator to direct contact with a water jet or pressure cleaner.

The on-board generator supplies voltage (220 V or 110 V depending on the option chosen) in the platform for connection of a power tool, up to 3.3kw.

Photo 18 - On-board generator

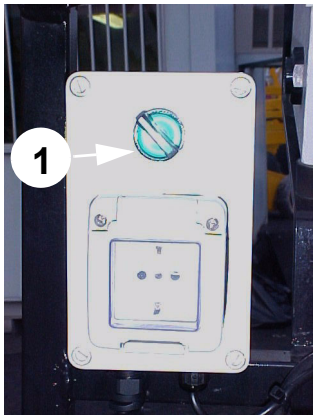

Photo 19 - Generator socket

4.10.1 -Instructions

- Switching on:
  - Start the machine from the platform control panel and allow the motor to run for 15 minutes before attempting to use.
  - Move the switch above the socket to the ON position. The generator only starts when all the platform panel light indicators are off (therefore movement is selected). The motor then accelerates and the button's green light indicator comes on to indicate that the generator is running (ref. 1, Photo 19, page 43).
  - Plug the power tool into the socket.
  - You can change tools at any time.

NOTA : *Machine movement is disabled while the on-board generator is in use. The on-board generator must be switched off (see instructions below) to make a movement.*

Caution !
Voltage may vary depending on the hydraulic oil used.

- Switching off:
  - Unplug the tool from the socket.
  - Move the switch above the socket to the OFF position (the motor decelerates): the green light indicator goes off, indicating that the generator has stopped.
  - Machine movement is re-enabled and all movements are available.

5 - MAINTENANCE

5.1 - GENERAL RECOMMENDATIONS

The maintenance operations indicated in this manual are given for normal conditions of use.

In difficult conditions: extreme temperatures, high humidity, polluting atmosphere, high altitude, etc., some operations must be carried out more frequently and special precautions must be taken. Contact PINGUELY-HAULOTTE's After Sales Service.

Only competent and authorised personnel by PINGUELY-HAULOTTE can carry out any work on the machine and they must comply with the safety instructions relating to the protection of personnel and environmental protection.

For the motor part, refer to the manufacturer's manual.

At regular intervals, check operation of the safety devices:

1°) Tilt: buzzer + stopping (travel and lifting disabled).

2°) Platform overload: The overload system is set in such a way that it will automatcially be triggered in case the permissible load is exceeded.

Caution !
Do not use the machine as a welding earth.
Do not weld without disconnecting the (+) and (-) terminals of the batteries.
Do not start other vehicles with the batteries connected.

5.2 - MAINTENANCE SYSTEM

Photo 20

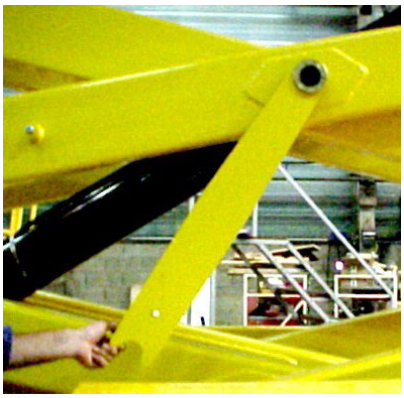

Photo 21

Instructions:

These operations are to be carried out on both sides of the platform.

Installing the maintenance stand:

- Park the elevation platform on a solid horizontal floor.
- Ensure that the two emergency stop buttons are «ON».

- Turn the chassis contact key to "chassis".
- Move the chassis lifting switch upwards to raise the platform.
- Unscrew and turn the maintenance stand to leave it hanging vertically.
- Push the lifting switch to the low position to lower the platform gradually until the maintenance stand comes into contact with the two fixing points (top and bottom) and the platform is totally immobilised.

Removing the maintenance stand:

- Push the chassis lifting switch up and gradually raise the platform until the maintenance stand is released.
- Turn the maintenance stand so that it is support in its storage position and screw back into place.
- Push the chassis lifting switch down and lower the platform completely.

https://truckmanualshub.com/

5.3 - MAINTENANCE PLAN

The maintenance plan shows the frequency, maintenance points (device) and ingredients to be used.

- The reference shown in the symbol shows the maitnenance point according to the frequency.
- The symbol represents the consumable to be used (or the operation to be carried out).

5.3.1 - Consumables

INGREDIENT	SPECIFICATION	Symbol	Lubricants used by PINGUELY - HAULOTTE	ELF	TOTAL
Motor oil Motor oil (Cold weather)	SAE 15W40 SAE 10W40	□	SHELL RIMULA-X SHELL RIMULA ULTRA		
Gearbox oil	SAE 90	◇	ESSO EP 80 W 90	TRANSELF EP 80 W 90	TM 80 W/90
Hydraulic oil Organic hydraulic oil (option) Hydraulic oil (Cold weather)	AFNOR 48602 ISO VG 46 BIO ISO 46 ISO6743-4-class LHV	◌	BP SHF ZS 46 SHELL TELLUS ARTIC OIL 32	HYDRELF DS 46	EQUIVIS ZS 46
Extreme pressure lithium grease	ISO - XM - 2	◌			
Lead-free grease	Grade 2 ou 3	○	BARDAL Super Teflub + PTFE	MULTIMOTIVE 2	MULTIS EP 2
Lithium grease	ENS / EP 700	⬡			

NOTA : The frequency of maintenance may vary depending on the quality class of the consumables used. Refer to the engine manufacturer's guide.

5.3.2 - Maintenance diagram

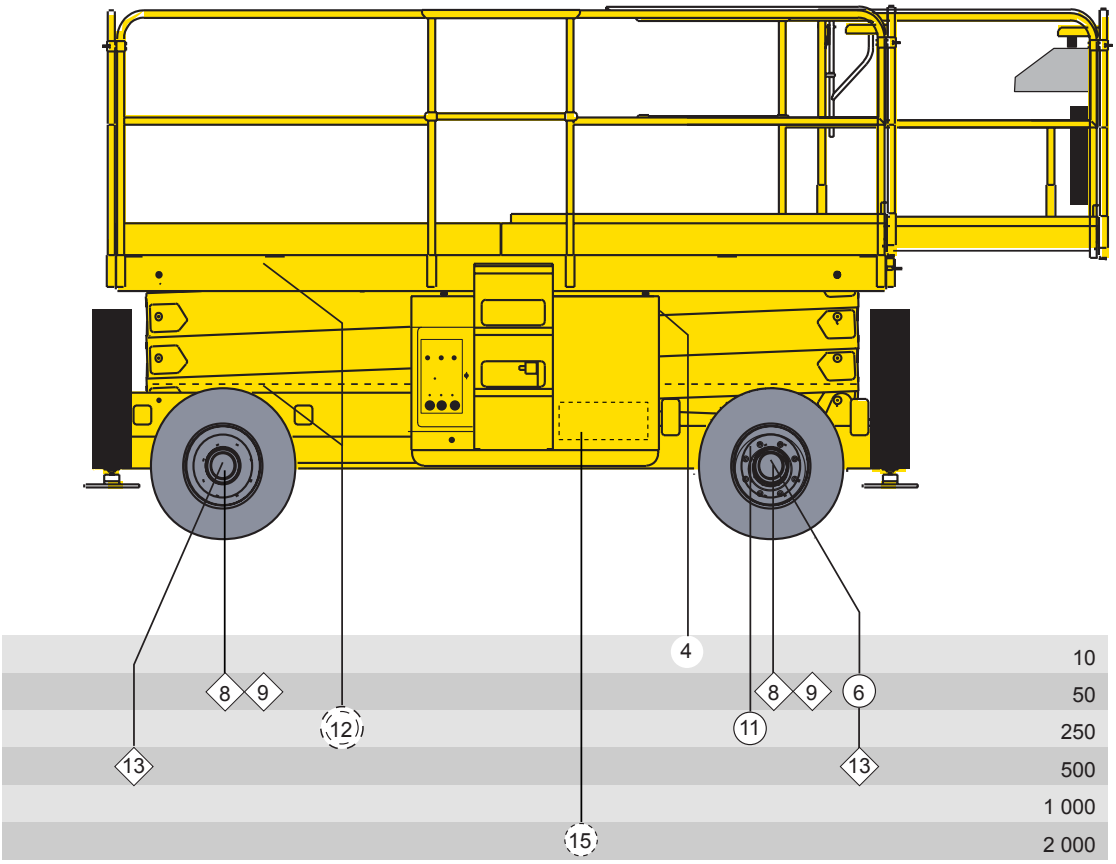

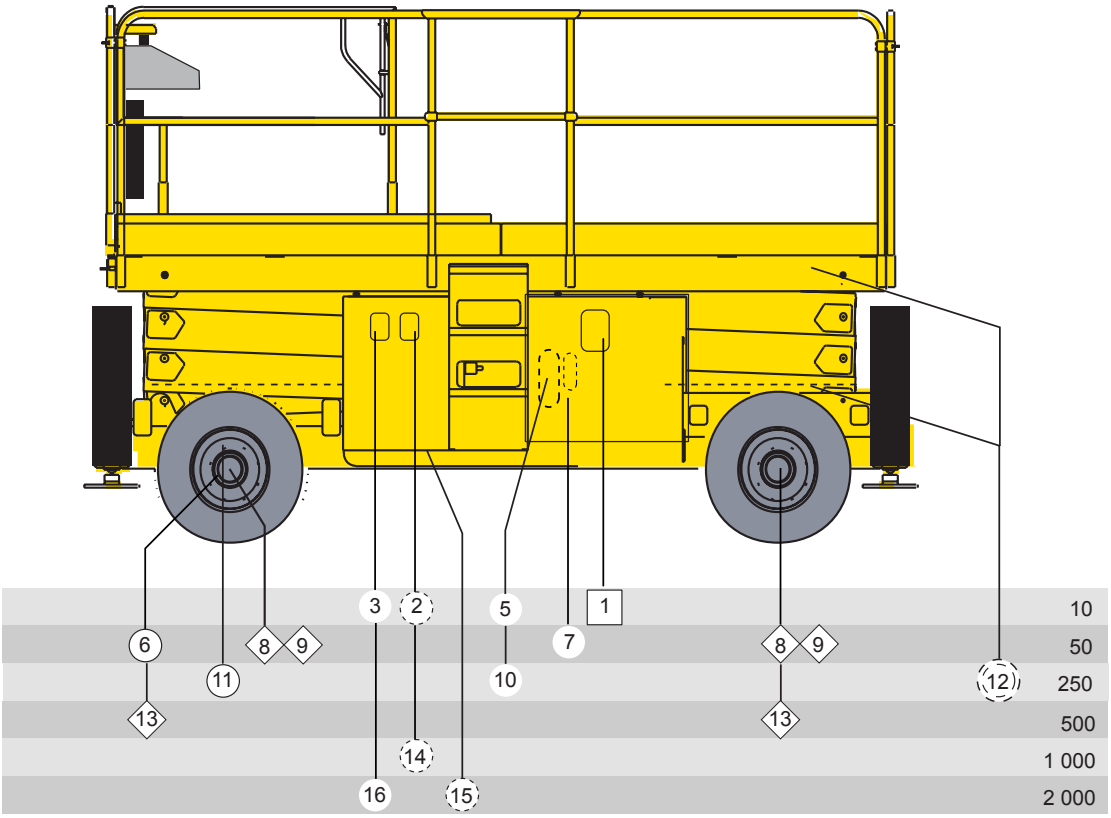

5.4 - OPERATIONS

5.4.1 - Summary table

INTERVAL	OPERATIONS	ITEM
Each day or before each putting into service	•Check the following levels: - engine oil - hydraulic oil - diesel - electric batteries • Check the cleanness: - diesel pre-filter; replace it if water or impurities present - machine (check in particular the watertightness of the connectors and hoses), take this opportunity to check the condition of the tyres, cables and all accessories and equipment • Check the clogging of the hydraulic oil filter: an indicator indicates clogging, change the cartridge when the mark appears	1 2 3 4 5
For the first 50 hours only	• Change the hydraulic filter's cartridge • Drain the drive wheel reducers • Check the tightness: - of the screws and bolts in general - of the wheel nuts (torque 32 daNm)	 9
Every 50 hours	• Grease: - the wheel pivot pins: 2 x 2 points • Check the diesel pre-filter; replace it if water or impurities present • Check the level of the drive wheel reducers	 6 7 8
Every 250 hours	Motor: see manufacturer's manual • Change the hydraulic filter cartridge • Grease: - the pivot pins on the steer wheels - the friction parts of the slideways (spatula) - the battery terminals	 10 11 12
Every 500 hours	Motor: see manufacturer's manual • Drain the wheel reducers • Fill up again: capacity : 2 x 0.7 l for 4x2 model - 4 x 0.7 l for 4x4 model • Oil change : organic hydraulic oil tank (option)	 13
Every 1000 hours or every year	Motor: see manufacturer's manual • Drain the hydraulic oil reservoir	 14
Every 2000 hours	Motor: see manufacturer's manual • Drain the complete hydraulic oil circuit and reservoir • Drain the diesel tank and clean it	 15 16
Every 3000 hours or every 4 years	• Check: - the condition of the slideways - the condition of the electric cables and hydraulic hoses, etc.	

REMINDER :All these intervals must be reduced in the case of work in difficult conditions (consult the After-Sales Department if necessary).

5.4.2 - Procedure

IMPORTANT:

For filling and greasing operations, use only the lubricants recommended in the table of Chapter 5.3, page 47.

Collect the drained oils so as not to pollute the environment.

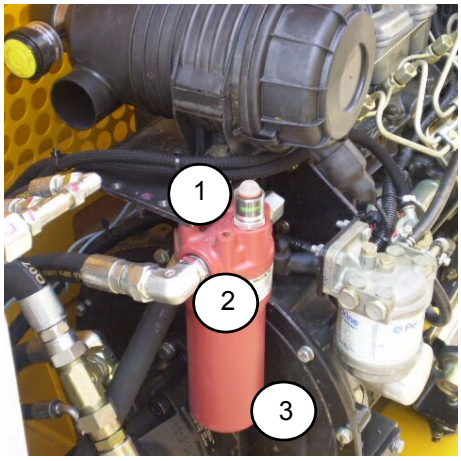

Photo 22

5.4.2.1 -Hydraulic oil filter (Photo 22, page 50)

Filter with clogging indicator.

- Change the cartridge (2) if the red indicator appears (1).
- Unscrew the base (3), remove the cartridge and screw a new cartridge into place.

NOTA : Clogging must be checked when the oil is hot. When the oil is cold the mark can appear because of the viscosity of the oil.

Caution !
Before removal, make sure that the oil circuit is no longer pressurised and that the oil is not too hot.

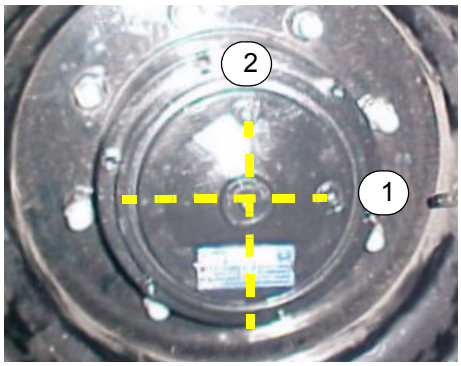

Photo 23

5.4.2.2 -Drive wheel reducers (Photo 23, page 50)

To check the oil level and change the oil, you have to remove the wheel. To do this, immobilise the machine and raise it using a jack or a hoist.

- Checking the oil level:
  - Rotate the wheel so as to put 1 plug (1) on a horizontal line and 1 plug (2) on a vertical line.
  - Unscrew plug (1) and check the level which should be flush with the hole, if necessary top up.
  - Replace the plug.
- Oil change:
  - In the same position, unscrew the two caps and allow the oil to flow out.
  - Fill as indicated above.
  - Screw the caps back into place.

Caution !
Make sure that the machine is correctly blocked, and that the lifting equipment is of sufficient capacity and in good condition.

https://truckmanualshub.com/

5.4.2.3 -Cylinder swivel joint lubrication (Photo 24, page 51)

Photo 24

Grease the swivel joint (item 1) with lead-free grease.

5.4.2.4 -Steer wheel pivot pin lubrication (Photo 25, page 51)

Photo 25

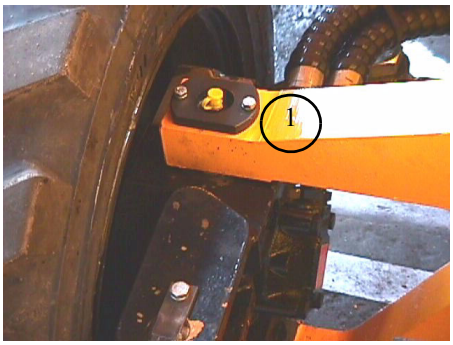

Grease the pivot pins (item 1) with lead-free grease.

5.4.2.5 -Slideway lubrication (Photo 26, page 51)

Photo 26

Grease with lead-free grease using a spatula.

5.4.3 - List of consumables

- Hydraulic filter cartridge.
- Air filter element.
- Diesel pre-filter.
- Diesel filter – motor oil filter.

6 - TROUBLE-SHOOTING

These few pages should enable you to “get over” any operating problem you may have on your scissor platform.

If a problem arises which is not covered in this chapter or which is not resolved by the solutions appearing below, you should consult qualified technical personnel before proceeding with any maintenance operation. It is also necessary to note that most of the problems encountered on the machine will come mainly from the electrical and hydraulic systems.

Before anything else, check that:

- the two mushroom-headed emergency stop buttons on the chassis control box and on the platform control box are unlocked and the key is in the chassis or platform position.

6.1 - PLATFORM LIFTING SYSTEM.

ANOMALY	VERIFICATION	PROBABLE CAUSE	SOLUTION
No movement when the lifting switch on the box is operated and the manipulator is engaged.	Check whether the movements are made when the lifting selector switch on the chassis control box is operated.	Control switch is not working.	Replace the switch (After-Sales Department).
		Manipulator is not working.	Replace the manipulator (After-Sales Department).
		Lack of oil in the hydraulic circuit.	Top up with oil as necessary.
The platform does not go up.		Load too great on the platform (personnel or equipment).	Reduce the load.
		Lack of oil in the hydraulic circuit.	Top up with oil as necessary.
		Tilt.	Check the position of the machine and leave the tilt position.
		Stabilising cylinder incorrectly positioned (option)	Start the stabilising operation again
The platform does not go down.		Load too great on the platform (personnel or equipment).	Reduce the load.
The platform goes up and down jerkily.		Lack of oil in the hydraulic circuit.	Top up with oil as necessary.

6.2 - TRAVEL SYSTEM

ANOMALY	VERIFICATION	PROBABLE CAUSE	SOLUTION
No movement when the switch is in the travel position and the manipulator on the platform control box is operated.		Manipulator is not working.	Repair or replace the manipulator (After-Sales Department).
		Lack of oil in the hydraulic circuit.	Top up with oil as necessary.
		Tilt.	Check the position of the machine and leave the tilt position.
		Overload	Reduce the load.
The machine runs away in downhill movement.		Balancing valve incorrectly adjusted or is not working properly.	Adjust or replace the balancing valve (After-Sales Department).

6.3 - STEER SYSTEM

ANOMALY	VERIFICATION	PROBABLE CAUSE	SOLUTION
No movement when the manipulator is operated.		Lack of oil in the hydraulic circuit.	Top up with oil as necessary.
		The control manipulator is not working.	Replace the manipulator (After-Sales Department).
Hydraulic pump noisy.		Lack of oil in the reservoir.	Top up with oil as necessary.
Cavitation of the hydraulic pump. (Vacuum in the pump due to a lack of oil).	The hydraulic oil takes on a cloudy appearance, becomes opaque and goes white. (presence of bubbles).	Oil viscosity too high.	Drain the circuit and replace with the recommended oil.
Overheating of the hydraulic circuit.		Oil viscosity too high.	Drain the circuit and replace with the recommended oil.
		Lack of hydraulic oil in the reservoir.	Top up with oil as necessary. Do several movements without a load so that the oil can warm up.
The system works in an irregular manner. The charge monitor does not work.		The hydraulic oil is not at an optimum operating tempera-ture. The monitor is not working properly.	Make several movements without a load so that the oil can warm up. Repair or replace the monitor.

7 - SAFETY SYSTEM

7.1 - FUNCTION OF RELAYS AND FUSES - CHASSIS BOX

(see wiring diagram)

KA2	Starting of thermal motor	FU4–30 A	General circuit fuse (motor)
KA46	Fuel / gas selection relay	FU5–3 A	Fuse - circuit for control of movement from chassis
KAD KAG	Directional relay	FU6–3 A	Fuse - circuit for control of movement from platform
KP1	Stopping of thermal motor	FU7–20 A	Fuse circuit power supply valve
KT2	Acceleration of movements (electro-motor)	FU8–5 A	Fuse circuit control
KMG	Mains supply	FU9–20 A	Fuse circuit accessories
FU1–10 A	Motor stop circuit fuse	FU11–25 A	Fuse circuit cooling system (Option)
FU3–80 A	Accelerator circuit fuse		

7.2 - FUNCTION OF THE SAFETY SWITCHES

(see wiring diagram)

SB1	Mushroom-headed emergency stop button (chassis)	SQ12	12 meter travel cut-off
SB2	Mushroom-headed emergency stop button (platform)	B1	Air filter contact. Light indicator on if air filter is clogged
SQ1	Tilt sensor. Prevents platform elevation and travel	B2	Motor oil temperature
SQ3	Tilt reset if machine is folded	B3	Oil pressure contact. Cutting-out of motor if pressure insufficient
SQ4	Capteur fin de course haut	B4	Hydraulic oil temperature contact. Audible alarm if temperature too high
SQ7	Calage avant gauche	B6	Overload. Audible alarm if overloaded
SQ8	Calage avant droit	B7 to B10	Indicator 'machine chocked'
SQ9	Calage arrière gauche	B11 to B14	Indicator 'locking jacks entirely gone in'
SQ10	Rear right stabiliser		

8 - WIRING DIAGRAMS

8.1 - H12SX - H15SX - H18SX FOLIO A-001

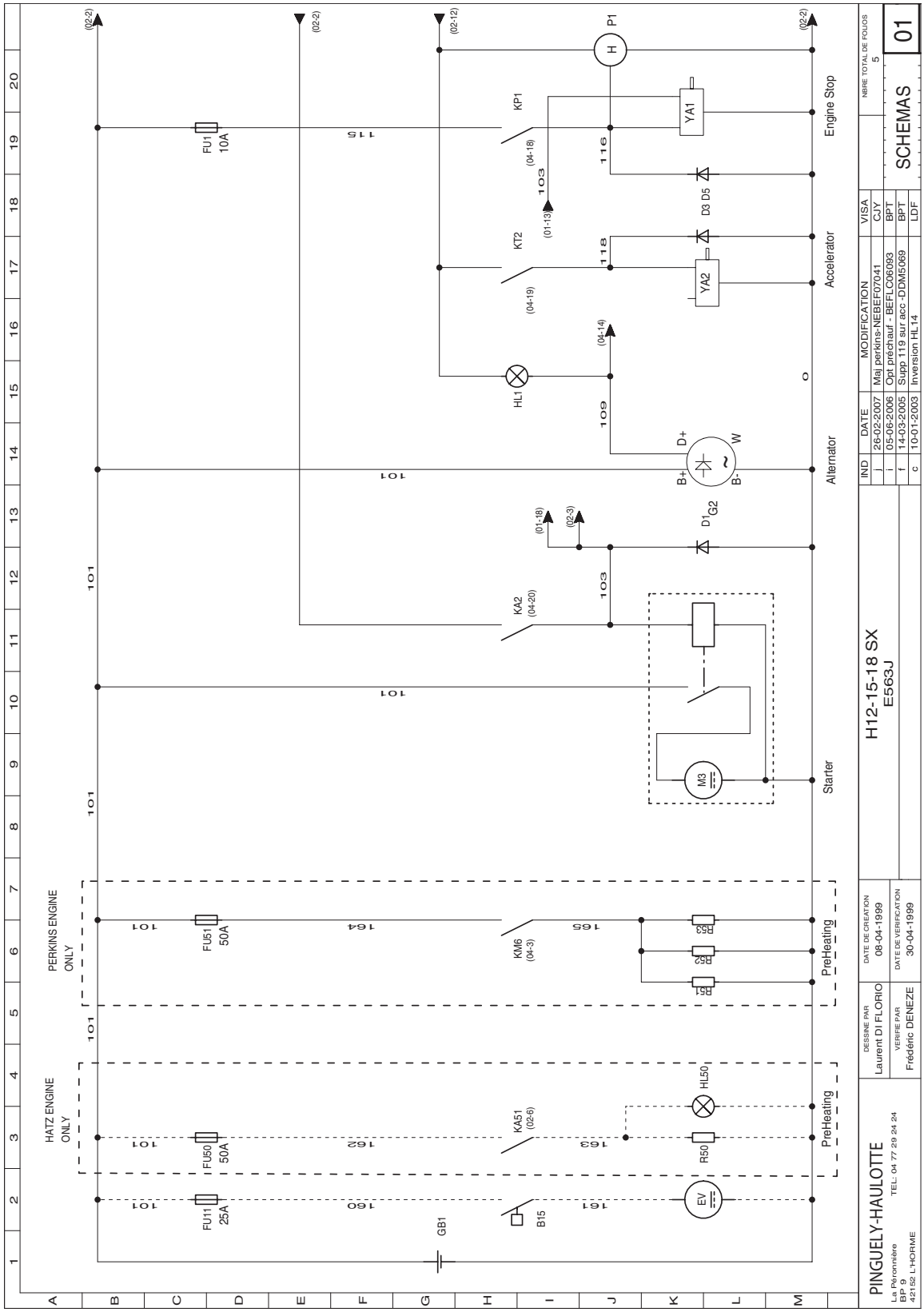

8.2 - H12SX - H15SX - H18SX FOLIO A-002

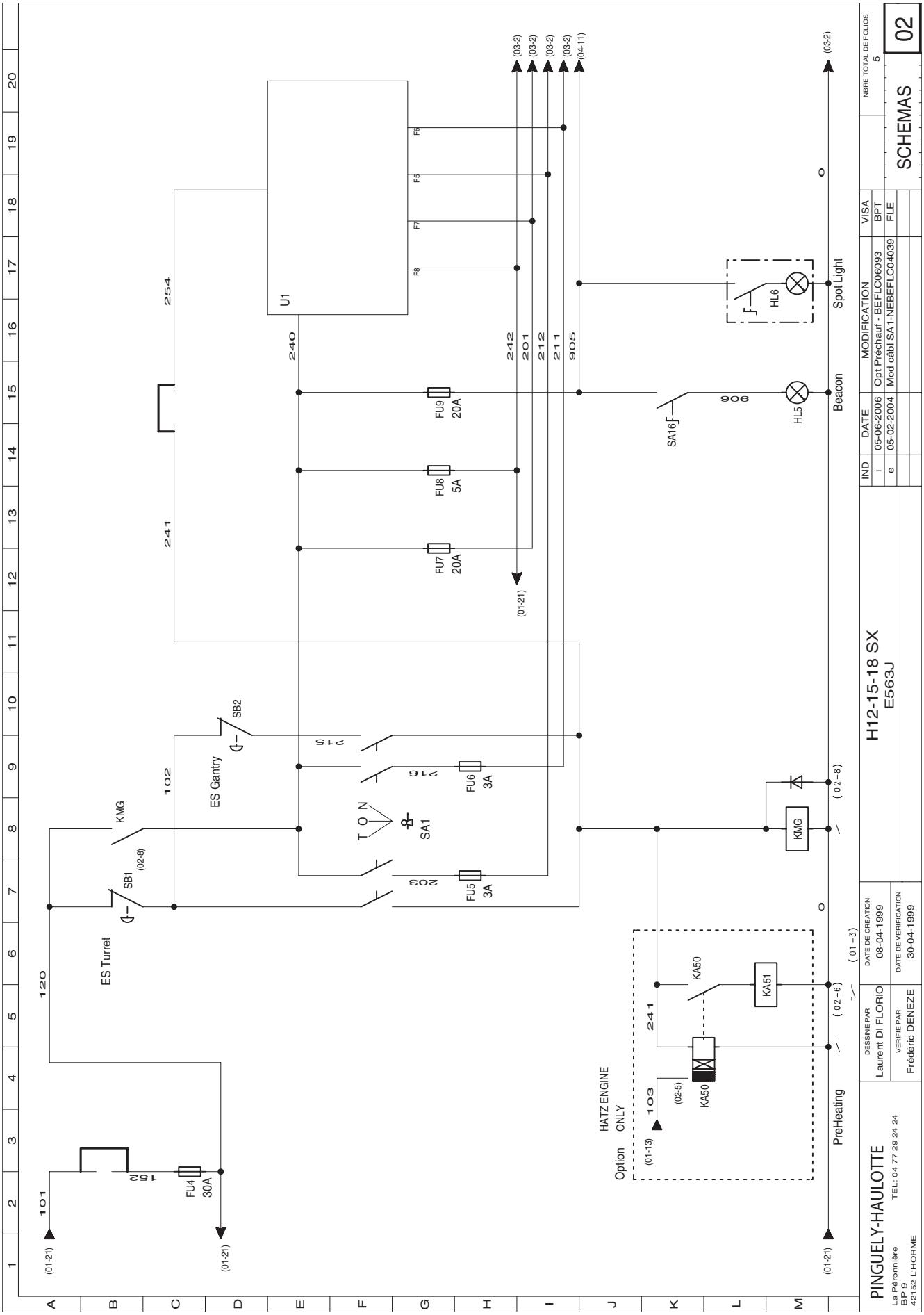

8.3 - H12SX - H15SX - H18SX FOLIO A-003

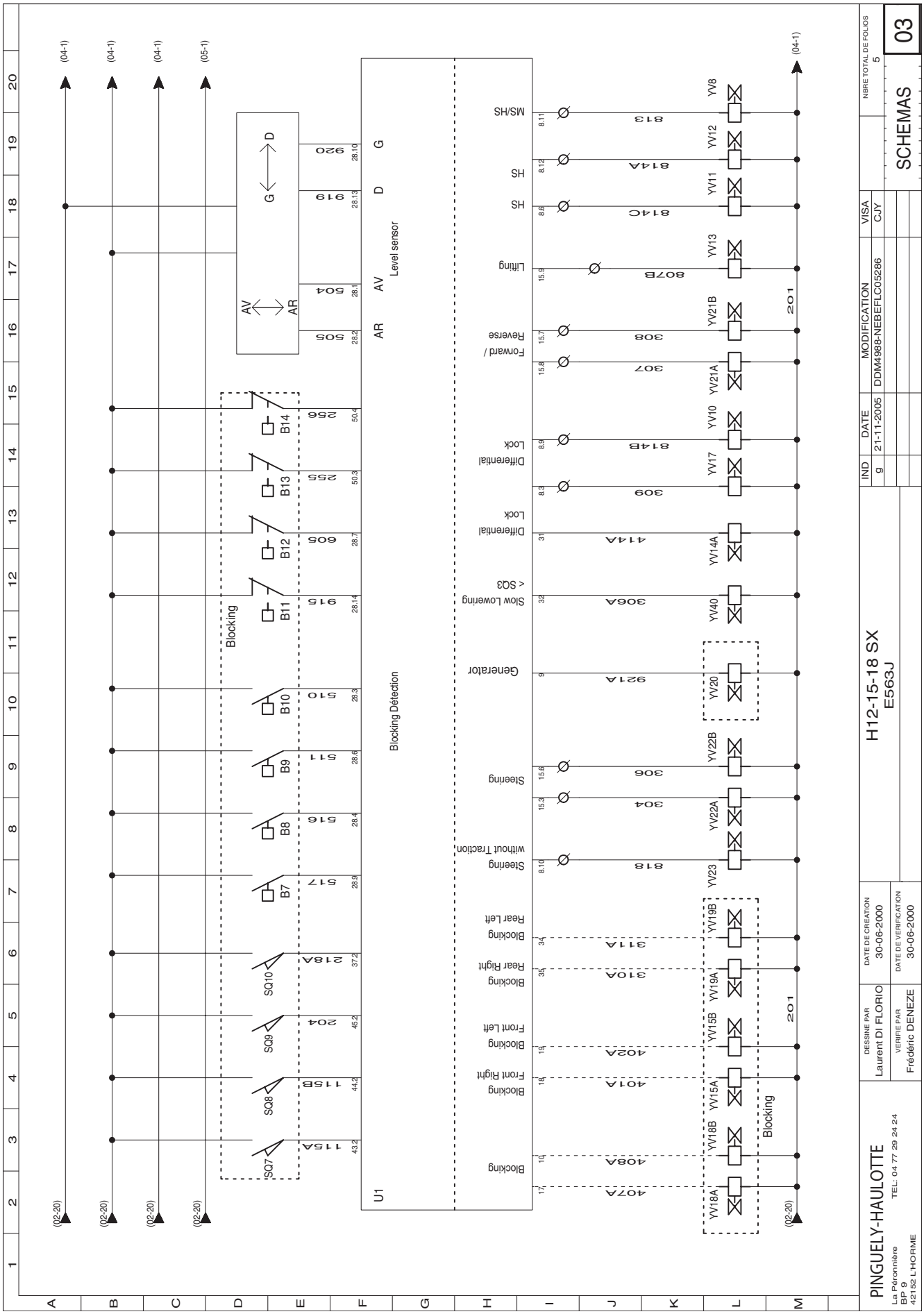

8.4 - H12SX - H15SX - H18SX FOLIO A-004

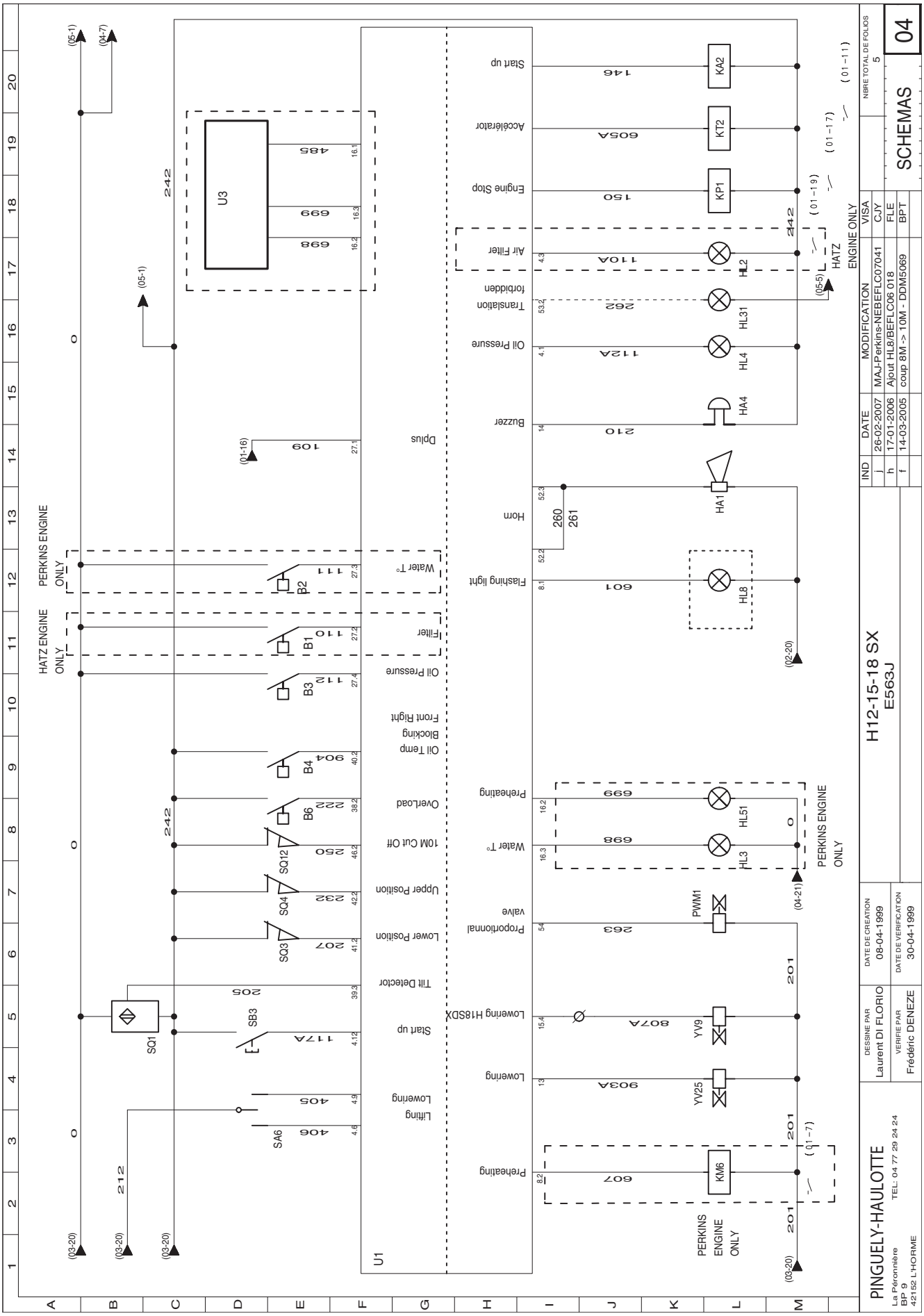

8.5 - H12SX - H15SX - H18SX FOLIO A-005

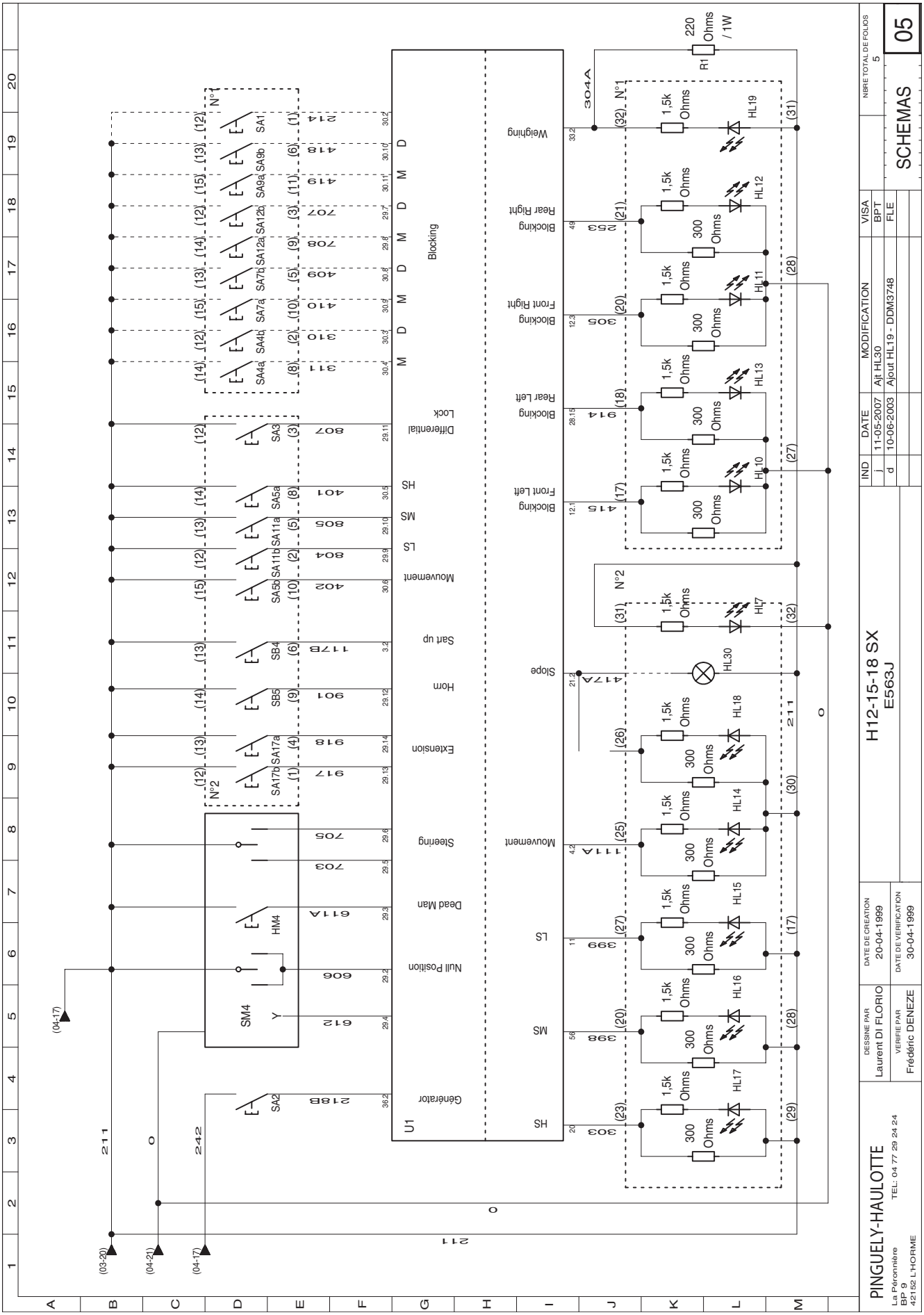

9 - HYDRAULIC DIAGRAMS

9.1 - H12SX - H15SX

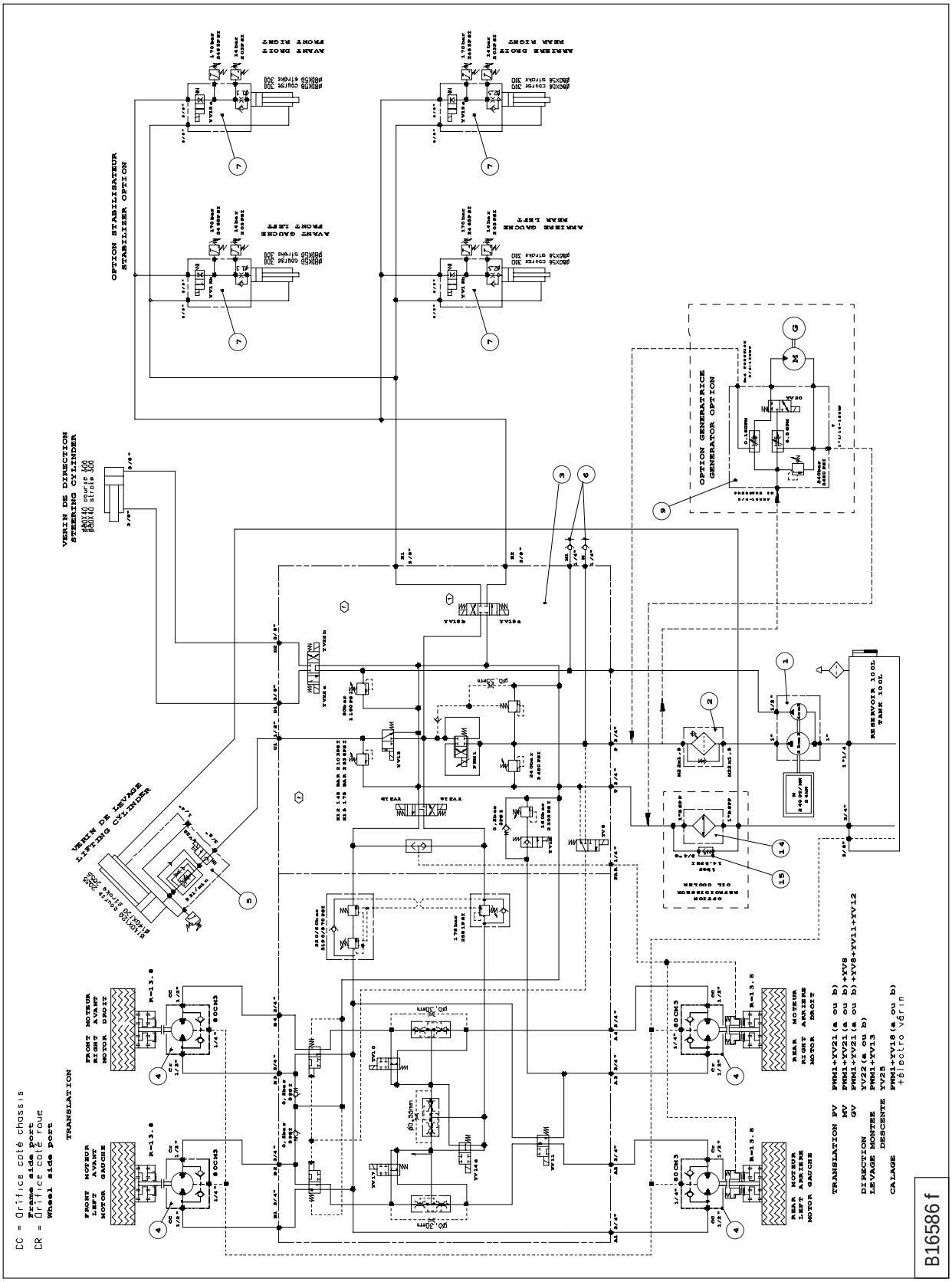

9.2 - H18SX

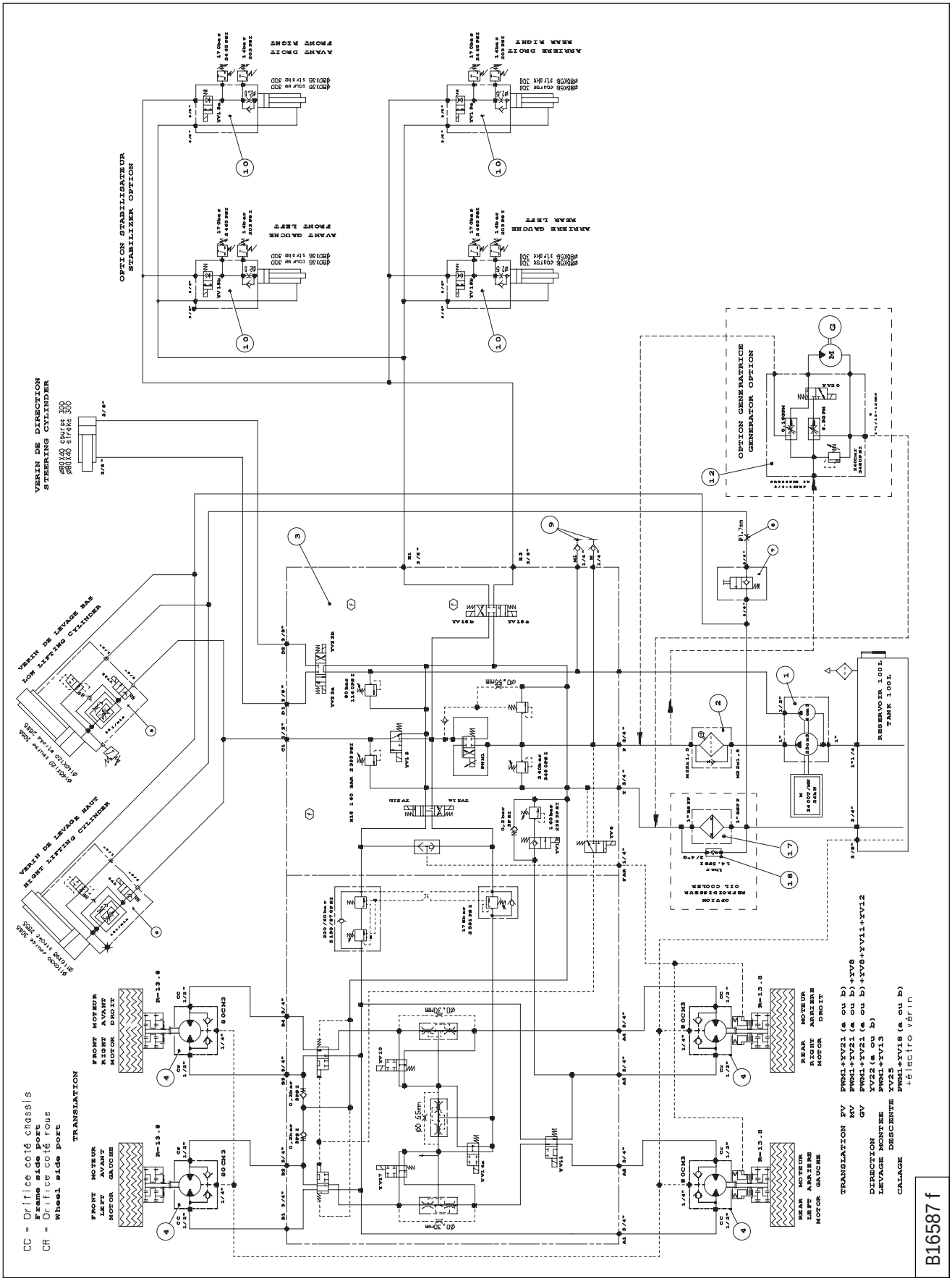
OPTION STABILISATEUR
STABILIZER OPTION
AVANT DROIT
FRONT RIGHT
AVANT GAUCHE
FRONT LEFT
ARRIERE DROIT
REAR RIGHT
ARRIERE GAUCHE
REAR LEFT
VERIN DE DIRECTION
STEERING CYLINDER
OPTION GENERATRICE
GENERATOR OPTION
VERIN DE LEVAGE BAS
LOW LIFTING CYLINDER
VERIN DE LEVAGE HAUT
HIGHT LIFTING CYLINDER
RESERVOIR 100L
TANK 100L
OPTION
REFROIDISSEUR
OIL COOLER
TRANSLATION
FRONT MOTEUR
RIGHT AVANT
MOTOR DROIT
FRONT MOTEUR
LEFT AVANT
MOTOR GAUCHE
REAR MOTEUR
RIGHT ARRIERE
MOTOR DROIT
REAR MOTEUR
LEFT ARRIERE
MOTOR GAUCHE
CC = Orifice coté chassis
Frame side port
CR = Orifice coté roue
Wheel side port
TRANSLATION PV PWM1+YV21 (a ou b)
MV PWM1+YV21 (a ou b)+YV8
GV PWM1+YV21 (a ou b)+YV8+YV11+YV12
DIRECTION YV22 (a ou b)
LEVAGE MONTEE PWM1+YV13
DESCENTE YV25
CALAGE PWM1+YV18 (a ou b)
+électro vérin
B16587 f