https://truckmanualshub.com/

GET UP AND GROW

Electric stackers
operator accompanied

716 BD ac - 720 BD ac

The economical and safe bi-directional electric stackers, ideal for transporting and storing long and / or bulky loads

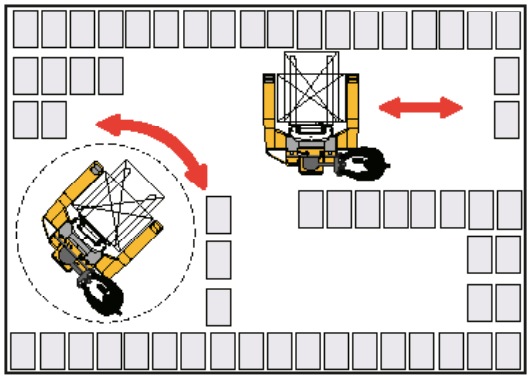

The 716 BD ac - 720 BD ac walk behind bi-directional forklift trucks are specially designed for warehouses with small spaces and long and/or wide loads. Economical and versatile, these machines are the perfect solution for all those who need to transport long loads on narrow aisles without guidance. The bi-directional stackers are available both with mechanical drive and electric drive version.*

*the total dimensions of the two models may vary, always check the data sheet.

Frame

Made of bended sheet metal to minimise any tensions induced by welds, ensuring maximum stability and best mechanical resistance under any conditions of transport and storage. The configuration with four support points provides maximum stability. The simple pivoting wheel adjustment system helps maintaining the same grip level, compensating for any wearout of the drive wheel. The highly visible masts and the lateral tiller ensure optimal visibility for load storage, picking and transport. The battery compartment cover is hinged, facilitating battery top-up and daily and periodical maintenance operations. Particular attention was paid to simplify the access to mechanical parts so as to minimise the routine maintenance costs.

Masts

The OMG masts are made of cold extruded profiles, ensuring high resistance to bending and twisting. The lift cylinders are installed outside of the mast profiles and the chains are protected to ensure perfect visibility and maximum safety. Available in simplex, duplex and triplex version with wide free lift and nominal capacities of 1,600 and 2,000 kg.

Hydraulic functions

The 3kW powerful and silent lift motor with high torque ration offers high performance with low power consumption. The pumps are highly efficient and very quiet. The mini joystick installed on the tiller (finger touch) allows the operator to lift and lower the forks without releasing the tiller.

Drive

ll Powerful and reliable ac traction motor, capable of meeting even the most demanding requests in terms of performance, under any conditions. Travel speed controlled directly by the throttle installed on the tiller.

Braking system

There are three braking systems in this range:

- braking by reversing the running direction and releasing the throttle (service braking that can be adjusted from the control panel);
- emergency braking that takes place automatically if the tiller is suddenly
- released or lowered (electromagnetic brake);
- parking brake.

The configuration with four support points provides optimal stability, ensuring maximum safety and comfort during load picking and storage. The mini joystick (finger touch) allows the operator to control the truck by simply moving his finger along the tiller, ensuring precise and smooth load lifting and lowering, without taking his hands off the tiller. The hydraulic motor with fluid adjustment system reduces the noise, ensuring at the same time smooth and precise load lifting. Enhanced lifting and lowering speed for faster operations. Side cylinders fitted with silent blocks to prevent any kickbacks that might affect the stability of the load during forks lowering.

The new range of forklift trucks is fitted with traction batteries of up to 375 Ah. With the wo-wa battery charger installed on-board (optional) you can recharge your truck from any socket. The electronic control comes with IP 65 protection rating and is waterproof and dustproof. The tiller head can also be manufactured with IP55 protection rating for protection against dust and water (standard feature for cold store versions).

The hydraulic system fitted on the 716 BD ac - 720 BD ac, which can be activated by the operator with the push of a button, located on the tiller, allows one of the front wheels to turn at 90 °, thus ensuring bi-directionality of the truck.

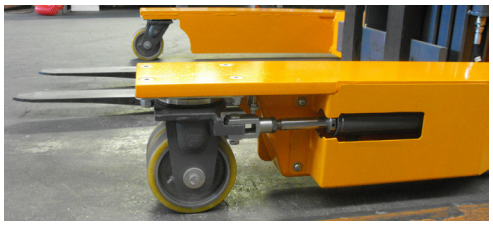

Wheel position light indicator fro wheel positioning, to facilitate handling operations, both with and without load. (optional)

https://truckmanualshub.com/

Accessories and special features			
total free lift for duplex column	■	double lateral battery extraction roller with wheels	■
total free lift for triplex column	■	access keypad with pin code	■
protection for cold storage	■	anti roll-back device	■
supertrack drive wheel	■	electronic speed control	■
polyurethane drive wheel	■	electronic braking system	■
low speed push-button with tiller in vertical position	■	electromagnetic parking brake	■
servo-assisted tiller	■	voltmeter-timer, auto-lock function when 80% of the battery capacity is discharged	■
lateral battery extraction system	■	24V 35A current rectifier on-board	■
automatic battery filling system	■		

standard ■ optional ■

Standard masts							716 BD ac	720 BD ac
Description		Lowered mast height	Forks stroke	Total lifting	Lowered mast height	Free lift	Capacity (t)	Capacity (t)
		h_1	h_3	h_3+h_{13}	h_4	h_2	(t) c=600 mm	(t) c=600 mm
Simplex	mm	2.080	1.610	1.650	2.250	1.560	1.6	2.0
Duplex	mm	1.955	2.760	2.800	3.435	1.410*	1.6	2.0
	mm	2.105	3.060	3.100	3.730	1.560*	1.6	2.0
	mm	2.360	3.560	3.600	4.230	1.810*	1.3	1.8
Triplex GAL	mm	1.860	3.860	3.900	4.500	1.310	1.1	1.6
	mm	1.960	4.160	4.200	4.800	1.410	1.0	1.5
	mm	2.110	4.610	4.650	5.250	1.560	0.90	1.4
	mm	2.360	5.360	5.400	6.000	1.810	0.60	1.0
* optional								

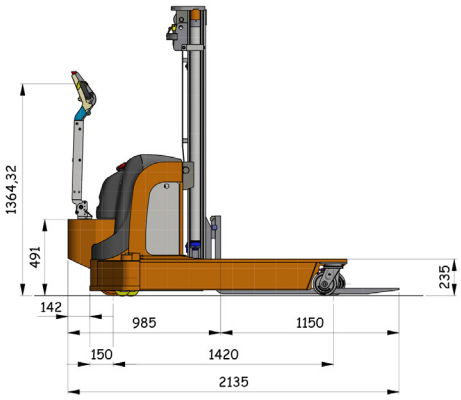

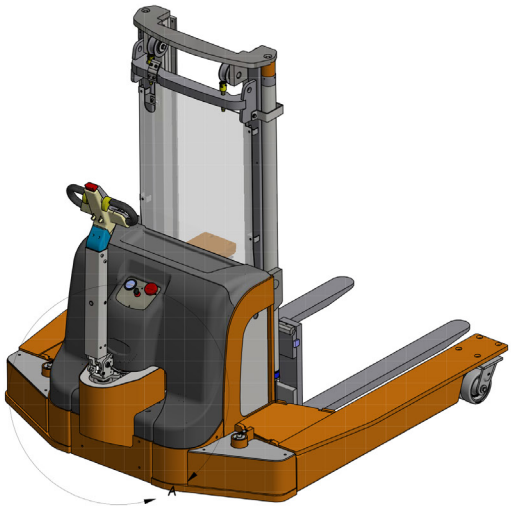

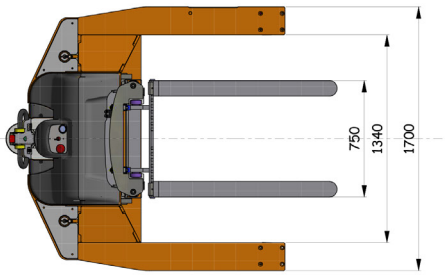

https://truckmanualshub.com/

Characteristics	1.1	Manufacturer			OMG S.r.l.			
	1.2	Model			716 BD ac		720 BD ac	
		Execution			GM	GE	GM	GE
	1.3	Operation			Electric		Electric	
	1.4	Operator position			at ground level		at ground level	
	1.5	Capacity	Q	t	1.6		2.0	
	1.6	Load centre of gravity	c	mm	600			
	1.8	Load distance	x	mm	730		727	
	1.9	Wheel centre distance	y	mm	1435		1420	
Weights	2.1	Truck weight incl. battery (see line 6.5)		kg	1300		1340	
	2.2	Weight on axis with front / rear load		kg				
	2.3	Weight on axis without front / rear load		kg				
Wheels Frame	3.1	Wheels and tyres			polyurethane		polyurethane	
	3.2	Front wheel size		mm	245			
	3.3	Rear wheels size		mm	150			
	3.4	Stabiliser wheels size		mm				
	3.5	Number of front / rear wheels (x = drive)		n°	1x / 2			
	3.6	Front track	b_{10}	mm				
	3.7	Rear track	b_{11}	mm	1520			
Base dimensions	4.2	Lowered mast height	h_1	mm	2.105			
	4.3	Free lift	h_2	mm	1.560*			
	4.4	Forks lifting stroke	h_3	mm	3.010			
	4.5	Extended mast height	h_4	mm	3.695			
	4.6	Initial lift	h_5	mm				
	4.9	Tiller height in min. /max. driving position	h_{14}	mm				
	4.15	Forks lowered height	h_{13}	mm				
	4.19	Overall length	l_1	mm				
	4.20	Length including forks heel	l_2	m				
	4.21	Overall width	b_1/ b_2	mm				
	4.22	Forks size	s/e/l	mm				
	4.25	Width over forks	b_5	mm				
	4.32	Clearance at mid stroke	m_2	mm				
	4.33	Working aisle width with 1000 x 1200 transversal pallet	Ast	mm				
	4.34	Working aisle width with 800 x 1200 longitudinal pallet	Ast	mm				
	4.35	Turning radius	W_a	mm				
Performance	5.1	Speed with / without load		km/h				
	5.2	Lifting speed with / without load		m/s				
	5.3	Lowering speed with/without load		m/s				
	5.8	Max. feasible gradient with / without load		%				
	5.10	Service brake						
Electric motors	6.1	Traction motor, 60 min performance with S2		kW				
	6.2	Lift motor, 15% performance with S3		kW				
	6.3	Battery as per DIN 43531 / 35 / 36 A, B, C, no			DIN 43531		DIN 43531	
	6.4	K5 battery voltage, nominal capacity		V/Ah	24 / 270 -345*-375*		24 / 345 -375*	
	6.5	Battery weight		kg				
	6.6	Power consumption as per VDI cycle		kW/h				
Miscellaneous	8.1	Type of electronic system			ac		ac	
	8.4	Noise threshold as per EN 12 053		dB(A)	< 70		< 70	
					* optional			

Technical data sheet referring to pallet truck in standard version; data determined in compliance with VDI 2198. These values may differ if your product is fitted with other types of wheels and tires, supports and accessories. All data and images herein are indicative, OMG S.r.l. reserves the right to modify the documentation without prior notice.

GET UP AND GROW

OMG S.r.l.
Registered office:
Via M.Buonarroti, 4 - 20835 Muggiò (MB)

Production site and head office:
S.P. Pascoletto, 3 - 46023 Gonzaga (MN) Italy
Tel. +39 0376 526011 Fax +39 0376 588008
www.omgindustry.com - info@omgindustry.com