https://truckmanualshub.com/

CLAAS

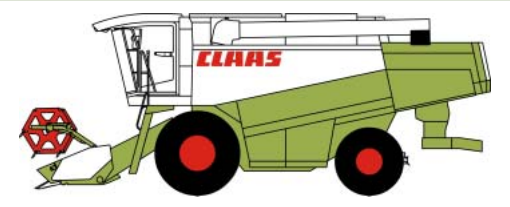

LEXION 480 - 405

Technical Systems

Hydraulic System

SERVICE & PARTS

https://truckmanualshub.com/

https://truckmanualshub.com/

Contents

Hydraulics

1 General hydraulics

2 Steering hydraulics

3 Working hydraulics – Standard machine functions

4 Working hydraulics – Additional machine functions

5 Working hydraulics – Front attachment

6 Low pressure hydraulics

7 Hydrostatic drive SAUER

8 Hydrostatic drive LINDE

9 Index

https://truckmanualshub.com/

Contents

General hydraulics

1.1 Oil tank 1-2
Oil specification 1-3
Quantity 1-3
Oil change 1-3
Oil filter 1-3
Oil pressure 1-3
General hydraulic problems 1-3

1.2 Hydraulic pumps 1-4
Working hydraulics 1-5
Steering hydraulics 1-5
Uni-spreader 1-5
Chaff spreader 1-6
Straw spreader 1-6
Side knife for rape 1-6
Sauer hydrostatic drive 1-6
Sauer charge pump 1-7
Linde hydrostatic drive 1-7
Linde charge pump 1-7

https://truckmanualshub.com/

1.1 Oil tank for the complete hydraulic system

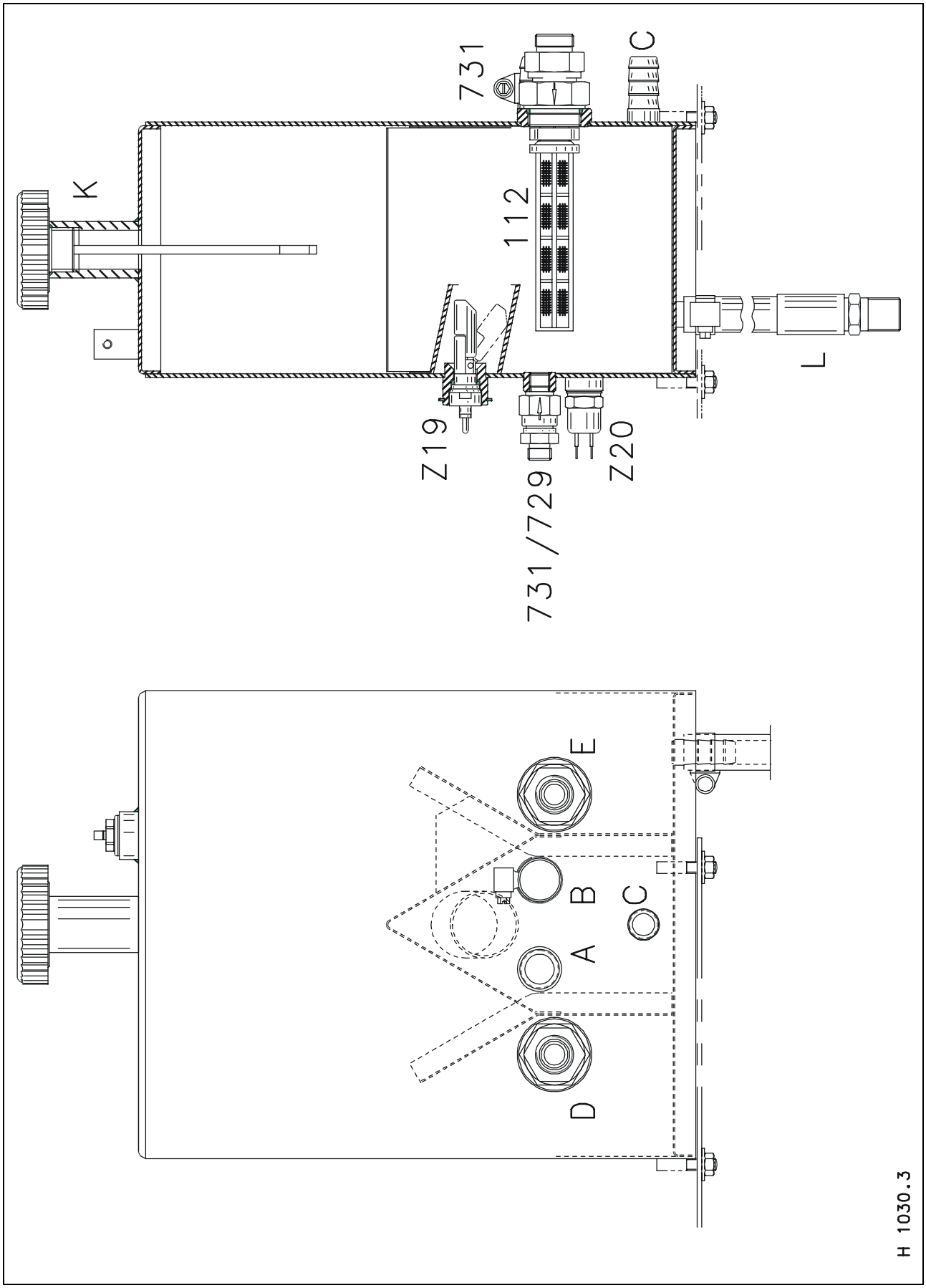

https://truckmanualshub.com/

Key to diagram

112	- Return flow filter
729	- Pressure relief valve for low pressure (starting in 2002) . . . . . 19^{+4} bar
731	- One-way valve
Z19	- Hydraulic oil level switch (min.)
Z20	- Hydraulic oil temperature . . . . . 103°C
A	- Suction connection – working hydraulics pump
B	- Suction connection – Uni-spreader or chaff spreader
C	- Suction connection – Steering hydraulics
D	- Return feed from hydrostatic drive and steering hydraulics
E	- Return feed for working hydraulics, Uni-spreader or chaff spreader
F	- Return flow filter
K	- Oil level dipstick with breather
L	- Oil drain pipe

Oil specification

General hydraulic oil conforming to (ISO VG 46), DIN 51524 part 3

Quantity

Total hydraulic system	= 40 - 60 litre, depending on specification
Hydraulic tank	= approx. 10 litre

Oil change

First change after the first 100 operating hours, then either yearly or every 500 hours whichever is sooner. Check the oil level with the cutterbar rams retracted.

Oil filter

Working hydraulics	= sieve filter in the tank (60 µm)
Steering hydraulics	= sieve filter in the tank (60 µm)
Hydrostatic drive	= filter cartridge (10 µm)

Change filter yearly or every 500 operating hours whichever is sooner.

Oil pressure

Working hydraulics	= 175^{+15} bar, back pressure 3^{+6} bar
Steering	= 160^{+15} bar, back pressure 10^{+7} bar
Low pressure hydraulics	= 19^{+4} bar
High pressure ground drive	= 420^{+30} bar
Charge pressure ground drive	= 30 ± 2.5 bar
Chaff spreader / straw spreader	= 175^{+15} bar
Uni-spreader	= 55^{+15} bar

Note: These figures are to be measured, when the hydraulic oil is at a working temperature of approx. 60°C

General hydraulic problems

Hydraulic tank overheating

Excessively high back pressure in the system
(p_{max} back pressure < 10 bar)

- Check the spool operation in the returns valve
- Check the hydraulic pipes for kinks
- Check the return filter for cleanliness

Note: If the machine is equipped with Autopilot, then also look in the chapter on steering hydraulics.

https://truckmanualshub.com/

1.2 Hydraulic pumps

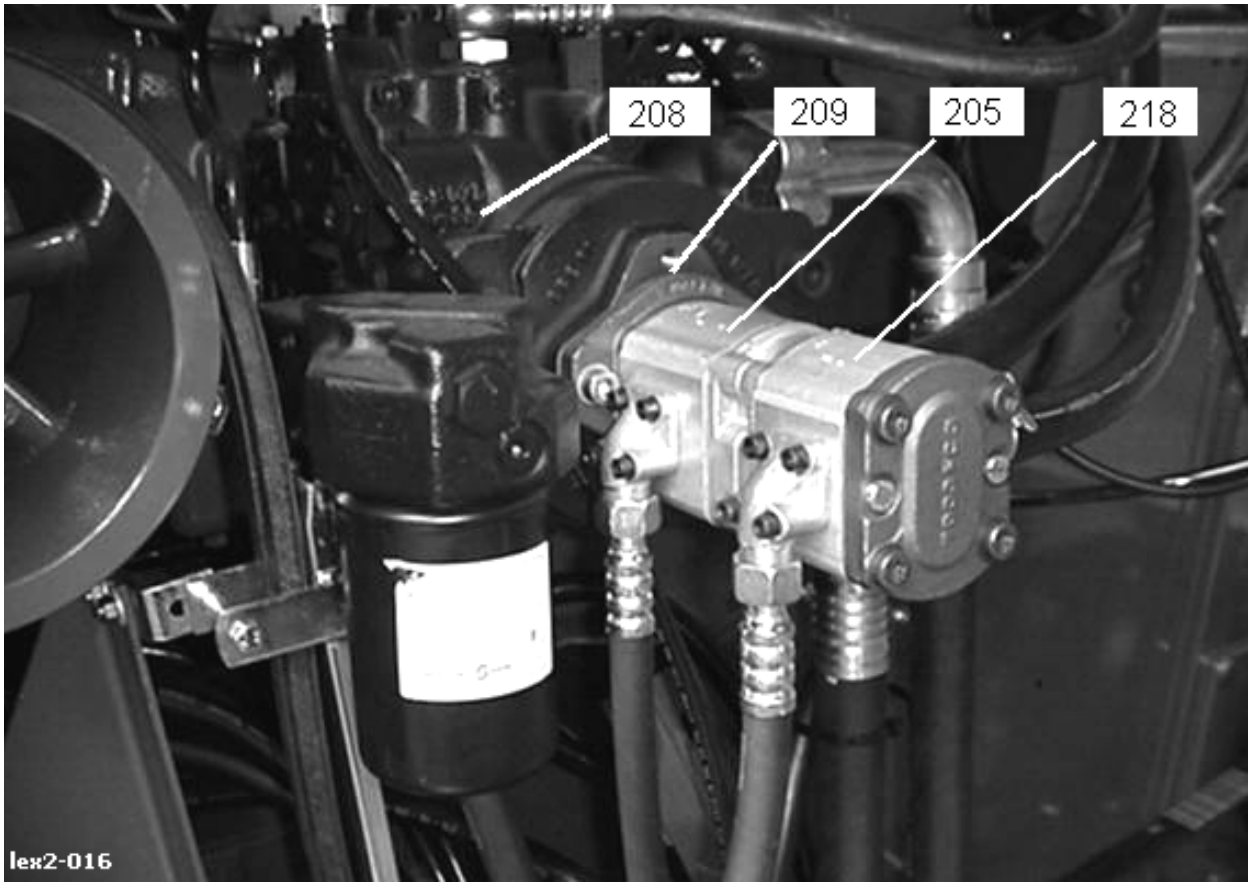

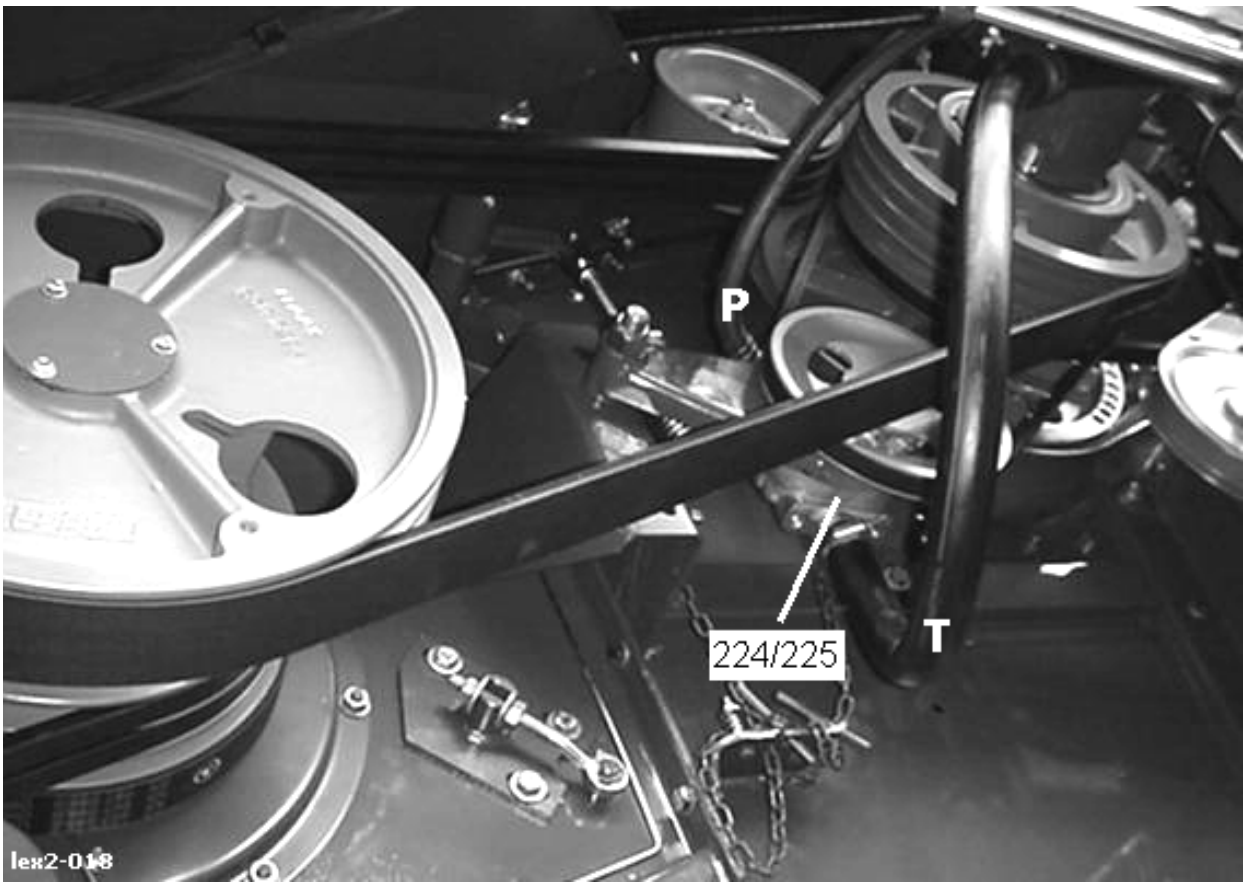

https://truckmanualshub.com/

Key to diagram

208	- Axial piston pump for hydrostatic ground drive
209	- Rotary pump for hydraulic ground drive charge pressure and low-pressure hydraulics
205	- Gear pump for working hydraulics (up to 2001, from 2002 on mounted on transfer gearbox)
218	- Gear pump for steering hydraulics
224/225	- Gear pump for Uni-spreader; chaff spreader or straw spreader

Working hydraulics

LEXION 480-440	Rotation	=	Clockwise
	Drive speed n_{max}	=	2670 min^{-1}
	Drive speed n_{net}	=	2567 min^{-1}
	Capacity	=	50 l/min with 19 cm^3
LEXION 430-405	Rotation	=	Clockwise
	Drive speed n_{max}	=	2970 min^{-1}
	Drive speed n_{net}	=	2857 min^{-1}
	Capacity	=	41 l/min with 14 cm^3

Steering hydraulics

LEXION 480-440	Rotation	=	Clockwise
	Drive speed n_{max}	=	2670 min^{-1}
	Drive speed n_{net}	=	2567 min^{-1}
	Capacity	=	29 l/min with 11 cm^3
LEXION 430-405	Rotation	=	Clockwise
	Drive speed n_{max}	=	2970 min^{-1}
	Drive speed n_{net}	=	2857 min^{-1}
	Capacity	=	32 l/min with 11 cm^3

Uni-spreader

LEXION 480	Rotation	=	Anti clockwise
	Drive speed n_{max}	=	approx. 1830 min^{-1}
	Capacity	=	11.5 l/min with 6 cm^3

https://truckmanualshub.com/

Chaff spreader	Lexion 460-405	Rotation	=	Anti clockwise
		Drive speed n_{max}	=	approx. 2200 min^{-1}
		Capacity	=	26 l/min with 12 cm^3
		Output speed n_{max}	=	approx. 330 min^{-1} - 950 min^{-1}
Straw spreader	Lexion 460-405	Rotation	=	Anti clockwise
		Drive speed n_{max}	=	approx. 2200 min^{-1}
		Capacity	=	26 l/min with 12 cm^3
		Output speed n_{max}	=	approx. 150 min^{-1} - 430 min^{-1}
Side knife for rape	Vario Cutterbar	Rotation	=	Anti clockwise
		Drive speed n_{max}	=	approx. 760 min^{-1}
		Capacity	=	9.2 l/min with 12 cm^3
	Standard Cutterbar	Rotation	=	Anti clockwise
		Drive speed n_{max}	=	approx. 1050 min^{-1}
		Capacity	=	9.5 l/min with 9 cm^3
Sauer hydrostatic drive	Lexion 480-440	Rotation	=	Clockwise
		Drive speed n_{max}	=	2670 min^{-1}
		Drive speed n_{net}	=	2567 min^{-1}
		Drive speed $n_{3rd\ gear}$	=	20 Km/h - approx. 1770 min^{-1}
		Drive speed $n_{3rd\ gear}$	=	25 Km/h - approx. 2210 min^{-1}
		Capacity	=	333 l/min with 130 cm^3
	Lexion 430-405	Rotation	=	Clockwise
		Drive speed n_{max}	=	2970 min^{-1}
		Drive speed n_{net}	=	2857 min^{-1}
		Drive speed $n_{3rd\ gear}$	=	20 Km/h - approx. 2180 min^{-1}
		Drive speed $n_{3rd\ gear}$	=	25 Km/h - approx. 2680 min^{-1}
		Capacity	=	286 l/min with 100 cm^3

https://truckmanualshub.com/

Sauer charge pump	Lexion 480-440	Rotation	=	Clockwise
		Drive speed n_{max}	=	2670 min^{-1}
		Drive speed n_{net}	=	2567 min^{-1}
		Capacity	=	67 l/min with 26 cm^3
	Lexion 430-405	Rotation	=	Clockwise
		Drive speed n_{max}	=	2970 min^{-1}
		Drive speed n_{net}	=	2857 min^{-1}
		Capacity	=	74 l/min with 26 cm^3
Linde hydrostatic drive (only 452-0572 to 452-0866)	Lexion 410-405	Rotation	=	Clockwise
		Drive speed n_{max}	=	2970 min^{-1}
		Drive speed n_{net}	=	2857 min^{-1}
		Drive speed $n_{3rd\ gear}$	=	approx. 1930 min^{-1}
		Capacity	=	300 l/min with 105 cm^3
Linde charge pump (only 452-0572 to 452-0866)	Lexion 410-405	Rotation	=	Clockwise
		Drive speed n_{max}	=	2970 min^{-1}
		Drive speed n_{net}	=	2857 min^{-1}
		Capacity	=	63 l/min with 22 cm^3

Note: The capacity of the pumps can only be determined using a flow meter. The performance is dependent on system pressure and operating temperature (60°C) which can drop by a **max. of 15%**.

https://truckmanualshub.com/

Contents

Steering hydraulics

2.1 Steering hydraulics circuit diagram 2-2
without Autopilot 2-2
with Autopilot 2-4

2.2 Position of the components 2-6

2.3 Operation of the steering 2-8
Operational schematic in neutral 2-8
Steering system 2-9
Valve blocks 2-9
Construction of the valve blocks 2-9
Neutral function 2-9
Schematic diagram of steering operation 2-10
Function of steering operation 2-11
Function of the emergency steering 2-11
Checking the steering system 2-12

2.4 CLAAS Autopilot 2-14
Solenoid valve 2-14
Description of operation 2-15
Checking the Autopilot system 2-16

https://truckmanualshub.com/

2.1 Steering hydraulics circuit diagram without Autopilot

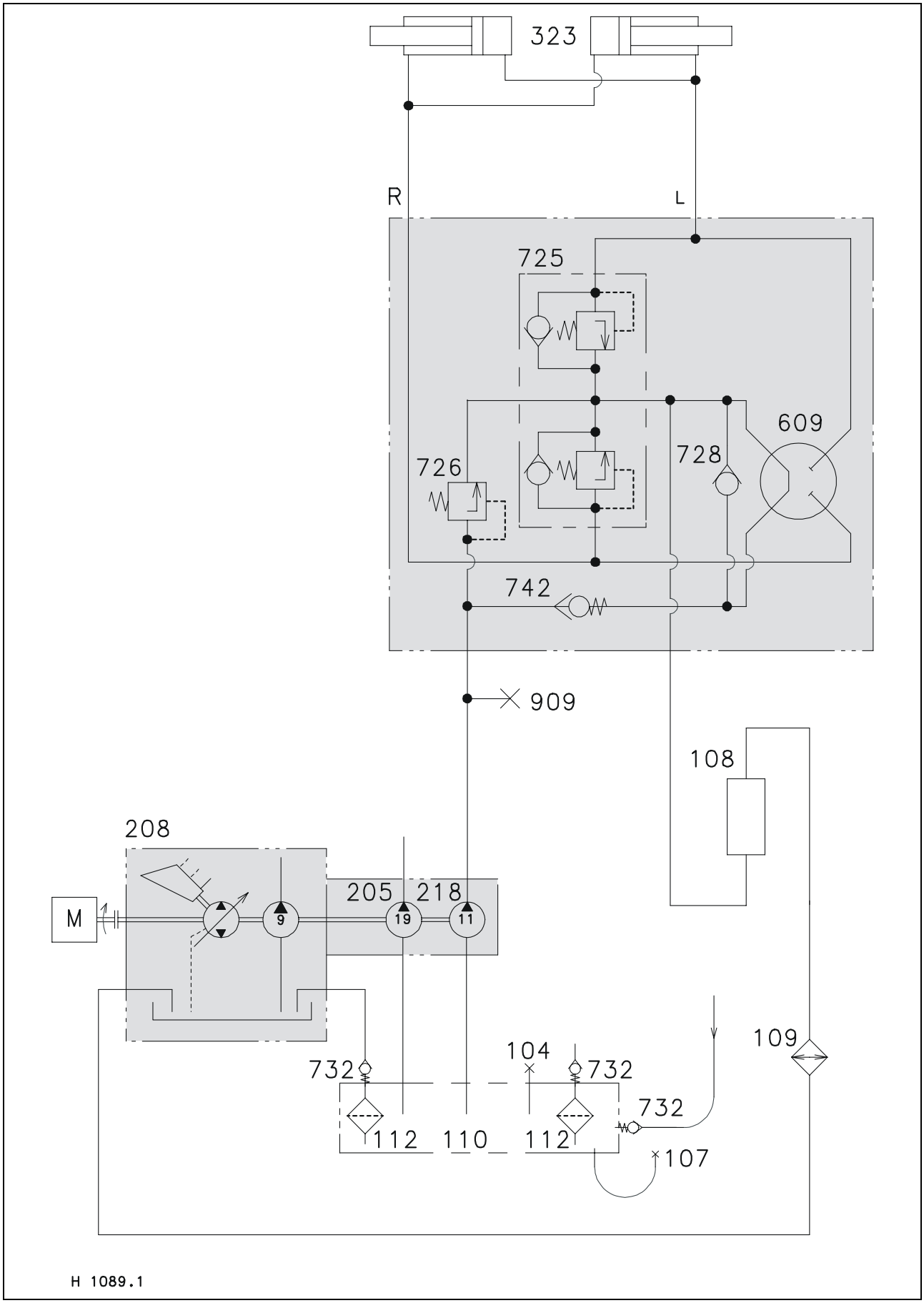

https://truckmanualshub.com/

Key to diagram

104	- Oil filler and breather screw	
107	- Oil drain hose	
108	- Oil reservoir for emergency steering	approx. 250 cm³
109	- Oil cooler	
110	- Oil tank	
112	- Sieve filter	
205	- Gear pump for working hydraulics	14/19 cm³
208	- Axial piston pump for hydrostatic ground drive	
218	- Gear pump for steering hydraulics	11 cm³
323	- Steering hydraulic ram	∅ 50/25 mm
609	- Rotary disc valve	
725	- Double shock valve	200±15 bar
726	- Pressure relief valve	160^{+15} bar
728	- One-way valve (emergency steering)	
732	- One-way valve, returns	
742	- One-way valve (emergency steering)	
909	- Steering pressure test port	

Annotation

1. For the LEXION 410 – 405 machines, there is only one steering ram (323) fitted. It is for these machines that the emergency reservoir (108) needs to be fitted, as it counteracts the displacement differences between the two ends of the ram.

2. LEXIONS 480 – 420 from 1999, the emergency reservoir (108) has been left off, as there are two steering rams (323) and no difference between the displacements.

Pressure readings

Back pressure	= 10^{+7} bar
System pressure	= 160^{+15} bar
Shock valve	= 200±15 bar

Note: These readings can only be expected with the engine running at a fast idle rate and the hydraulic oil at working temperature of 60°C.

https://truckmanualshub.com/

Steering hydraulics circuit diagram with Autopilot

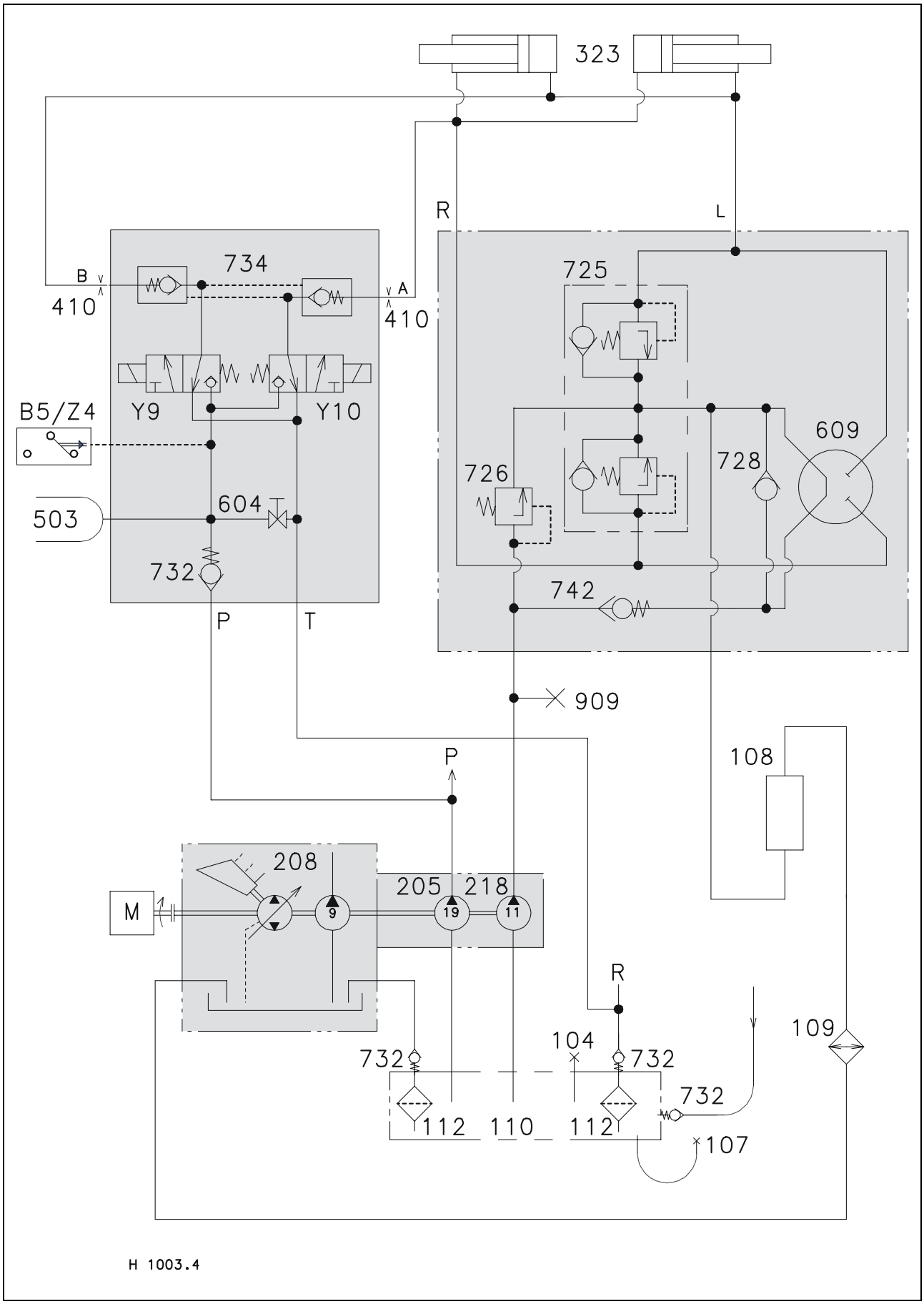

https://truckmanualshub.com/

Key to diagram

104	- Oil filler and breather screw	
107	- Oil drain hose	
108	- Oil reservoir for emergency steering	approx. 250 cm³
109	- Oil cooler	
110	- Oil tank	
112	- Sieve filter	
205	- Gear pump for working hydraulics	14/19 cm³
208	- Axial piston pump for hydrostatic ground drive	
218	- Gear pump for steering hydraulics	11 cm³
323	- Steering hydraulic ram	∅ 50/25 mm
410	- Restrictor	∅ 1.5 mm
503	- Accumulator	0.7 l / 80 bar
604	- Pressure relief bolt	
609	- Rotary disc valve	
725	- Double shock valve	200±15 bar
726	- Pressure relief valve	160^{+15} bar
728	- One-way valve (emergency steering)	
732	- One-way valve, returns	
732	- One-way valve	
734	- One-way valve (lock-up valve unit)	
742	- One-way valve (emergency steering)	
909	- Steering pressure test port	
B5	- Oil pressure switch, NC contact	135/160±5 bar
Z4	- Oil pressure switch, NC contact	135/160±5 bar
Y10	- Autopilot solenoid valve	
Y9	- Autopilot solenoid valve	

Note

1. For the LEXION 410 - 405 machines, there is only one steering ram (323) fitted. It is for these machines that the emergency reservoir (108) needs to be fitted, as it counteracts the displacement differences between the two ends of the ram.

2. LEXIONS 480 - 420 from 1999, the emergency reservoir (108) has been left off, as there is two steering rams (323) and no difference between the displacements.

Pressure readings

Back pressure	= 10^{+7} bar
System pressure	= 160^{+15} bar (Autopilot 175^{+15} bar)
Shock valves	= 200 ± 15 bar

Note: These readings can only be expected with the engine running at a fast idle rate and the hydraulic oil at working temperature of approx. 60°C.

https://truckmanualshub.com/

2.2 Position of the components

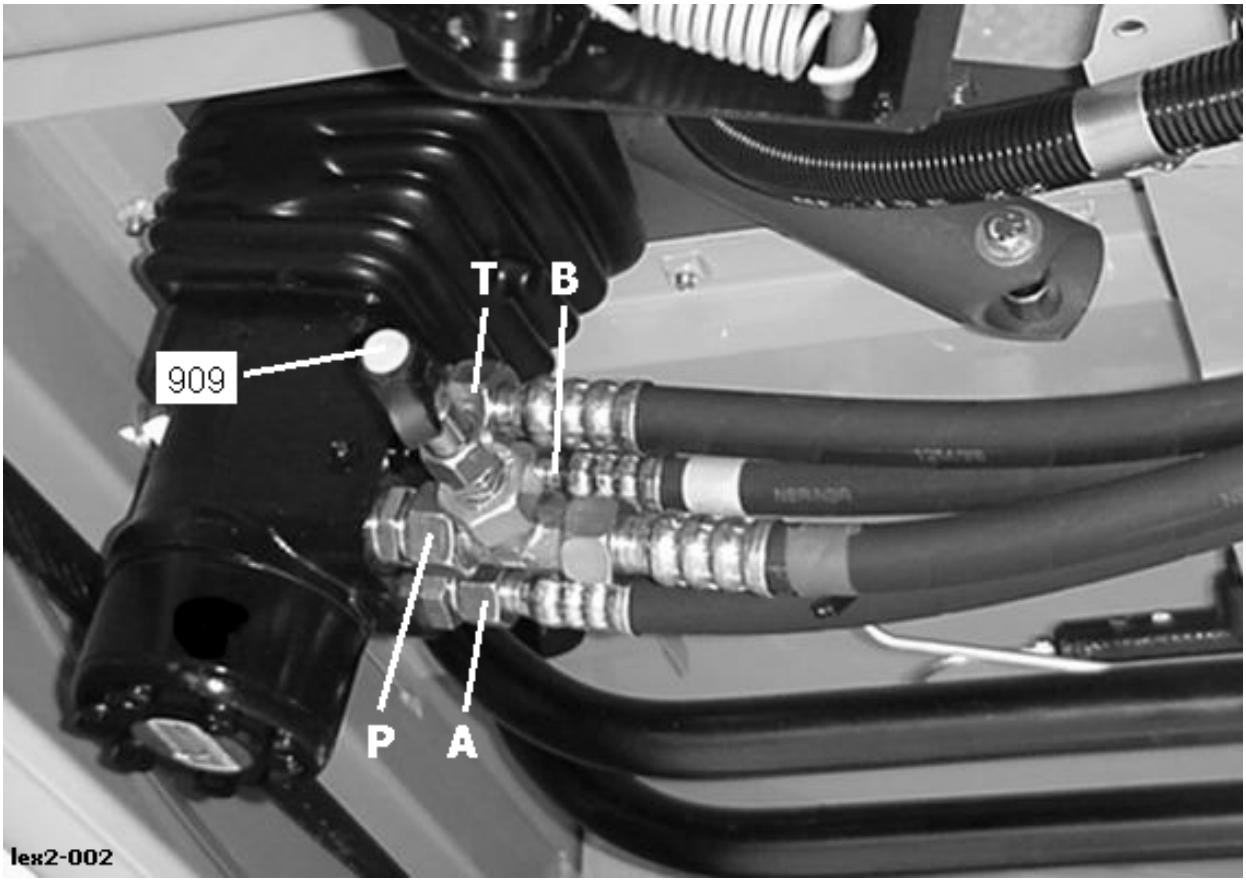

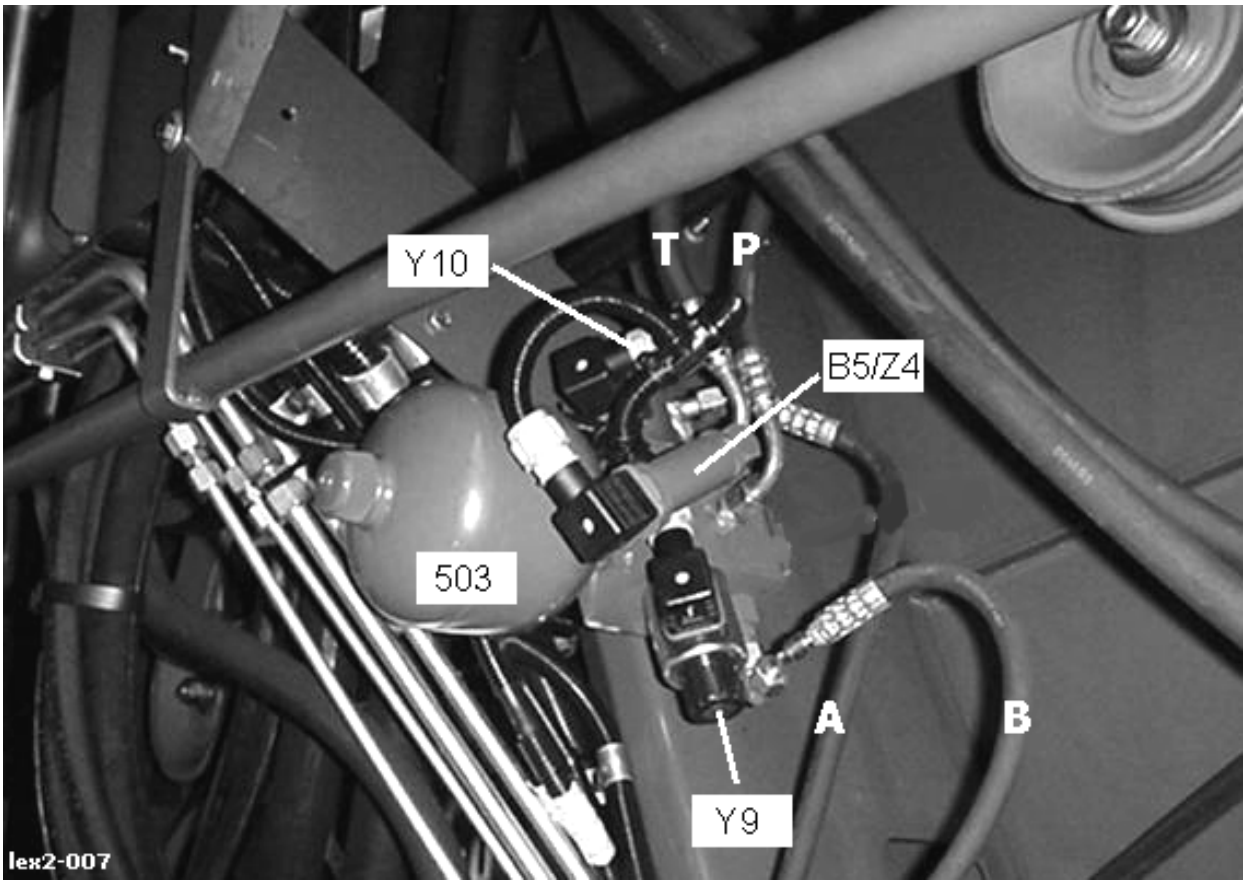

https://truckmanualshub.com/

Key to diagram

503	- Accumulator	0.7 l / 80 bar
909	- Steering pressure test port	160^{+15} bar
B5	- Oil pressure switch, NC contact	135/160±5 bar
Z4	- Oil pressure switch, NC contact	135/160±5 bar
Y9	- Autopilot solenoid valve, left-hand	
Y10	- Autopilot solenoid valve, right-hand	
P	- Hydraulic pump connection	
T	- Tank connection	
A	- Right hand steering ram connection	
B	- Left hand steering ram connection	

https://truckmanualshub.com/

2.3 Operation of the steering

Operational schematic in neutral

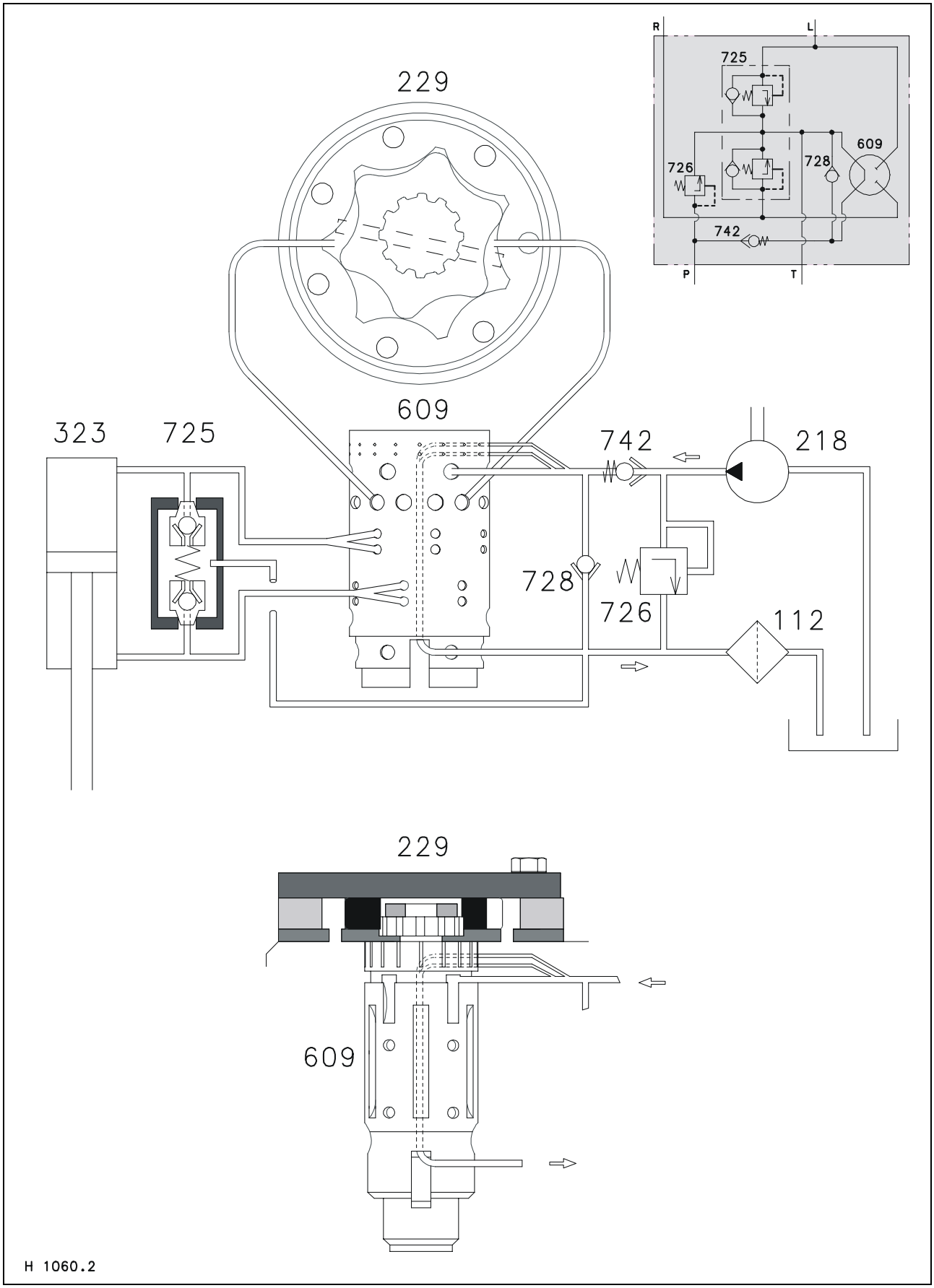

https://truckmanualshub.com/

Steering system

Open centre = With steering controls in neutral, the oil from the pump circulates through the steering unit back to the reservoir

Non reaction = With steering controls in neutral, shock loads acting on the rear wheels will cause no reaction on the steering wheel

Valve components

DANFOSS OSPB 250 with valve block OVP 20	-to machine no.	466-0345 454-0805 453-0041 452-0016
DANFOSS OSPC 250 with integral valve block	-from machine no.	466-0346 454-0806 453-0042 452-0017

Key to diagram:

O	= Orbitrol
S	= Steering
P	= Pump
B	= Version
250	= Oil displacement in cm^3/min^{-1}
V	= Valve block
20	= Pressure setting of shock valve x 10

Components of the valve block

The orbitrol – unit consists of a rotor assembly (metering unit) (229) with rotating steering valve (inner and outer spool) (609).

The steering spindle operates the rotary disc valve (609) which in turn operates the rotor (229) via the pin.

Neutral function

In the neutral position, the oil flows through the one way valve (742) and the rotary valve (609) and back to tank (open centre). The back pressure must not exceed 20 bar.

Both ends of the steering rams (323) are locked by the valve (609). Pressure spikes caused by external influences, are eliminated by the shock valves (725), which opens to tank (Non reaction).

https://truckmanualshub.com/

Function of steering operation
Schematic diagram of steering operation

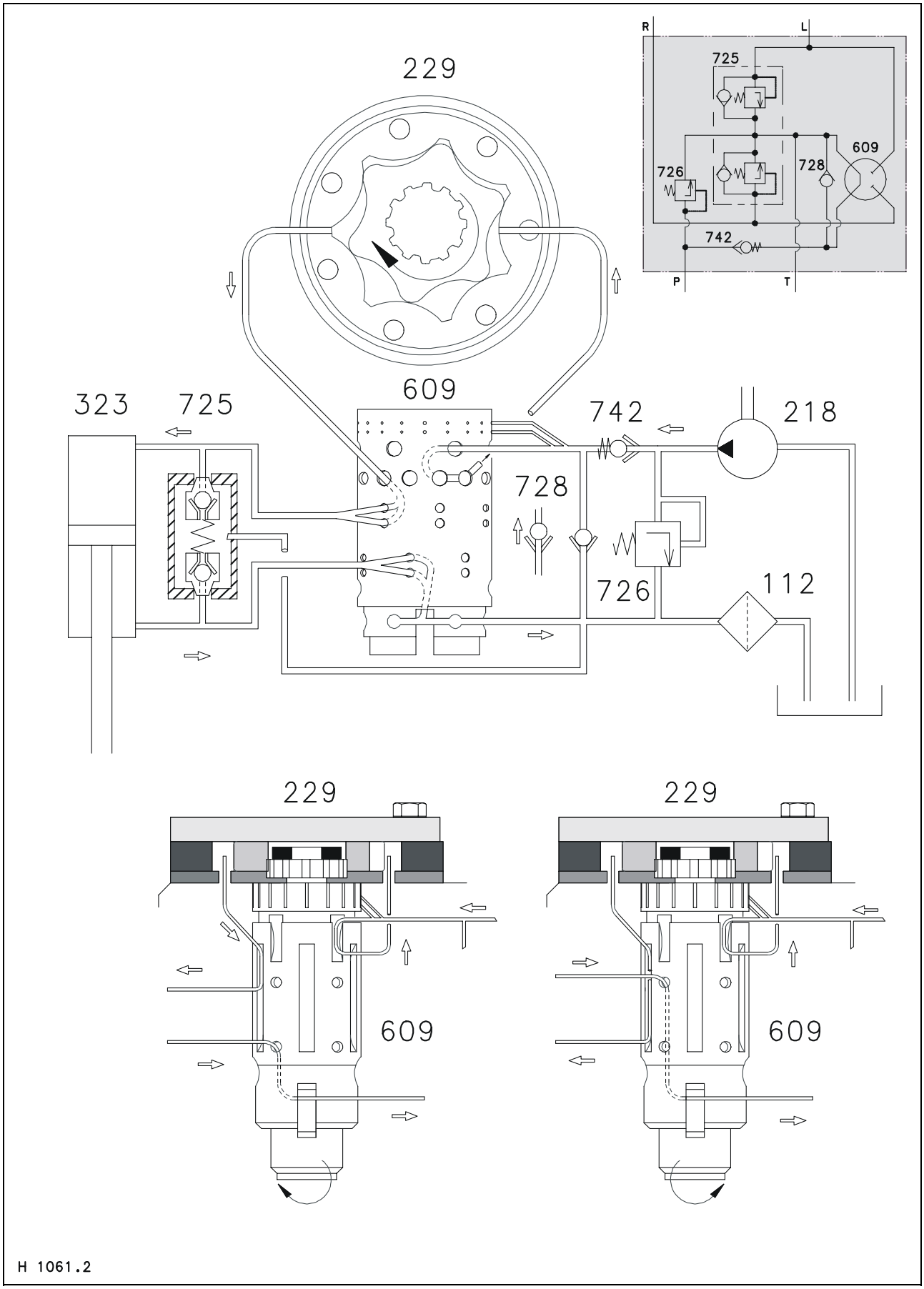

https://truckmanualshub.com/

Function of steering operation

By turning the steering wheel in one direction or the other, causes the inner spool (609) to turn up to 8° to the outer spool (609). This causes the return from the pump (218) to tank to be closed and the connection to the measuring unit (229) is opened.

The oil flow rate is dependent on the rotation, amount and speed of the rotor (229) and the rotary valve (609) to the ram of ram ring flange of the steering rams (323). The displacing flange area of the ram (323) is thus connected via rotary valve (609) to the return flow to the tank.

As soon as the steering wheel is released, the springs return the inner and outer spool (609) back to the neutral position. As soon as they are returned to the neutral position, then either end on the ram is locked and the connection between pump (218) and tank re-instated.

Function of the emergency steering

When the steering pump (218) fails to deliver oil to the steering system, the one way valve (742) closes, ensuring that no oil can flow out from the system.

Operating the steering wheel in one direction or the other will turn the inner and outer spool (609) in an opposite direction. Oil is then pumped by the rotor (229) using muscel power from one side of the steering ram (323) to the other, via the one way valve (728).

Machines that are only equipped with one ram (323), require the reservoir as one side of the ram has a different surface area to the other.

https://truckmanualshub.com/

Checking the steering system

Steering spindle - height tolerance = 0.1 to 0.3 mm

Distance to floor in rotor rings = 3 mm

Return - The springs should return the spools back to the neutral position when the engine is no longer running and after the steering wheel has been operated.

Reaction - In case of poor reaction, internal leaks should be inspected. Disconnect both hydraulic hoses from the steering rams, and securely plug them with screw plugs.
With the oil at operating temperature and the engine at idle speed, it should be possible to turn the steering wheel at 4 min^{-1} with a force of 25 Nm into both directions.

If the wheel can be turned faster than 4 min^{-1} then check for leaks within the steering valve block. Should it be slower than 4 min^{-1}, then check for leaks at the steering ram.

Power - Should there be not enough power in the steering, then the following items need to be checked out: tyre sizes, tyre pressure, condition of the connecting rods and the king pin.

A pressure reading at the test port on the steering ram should be in the region of 160^{+15} bar.
The pressure relief valve is not adjustable on a complete machine.

Caution: After every operation on the system, both hydraulic pipes from the steering rams must be bled, when the engine is at idle.

https://truckmanualshub.com/

Notes

https://truckmanualshub.com/

2.4 CLAAS Autopilot

Solenoid valve (4/3 way) with accumulator and lock valve

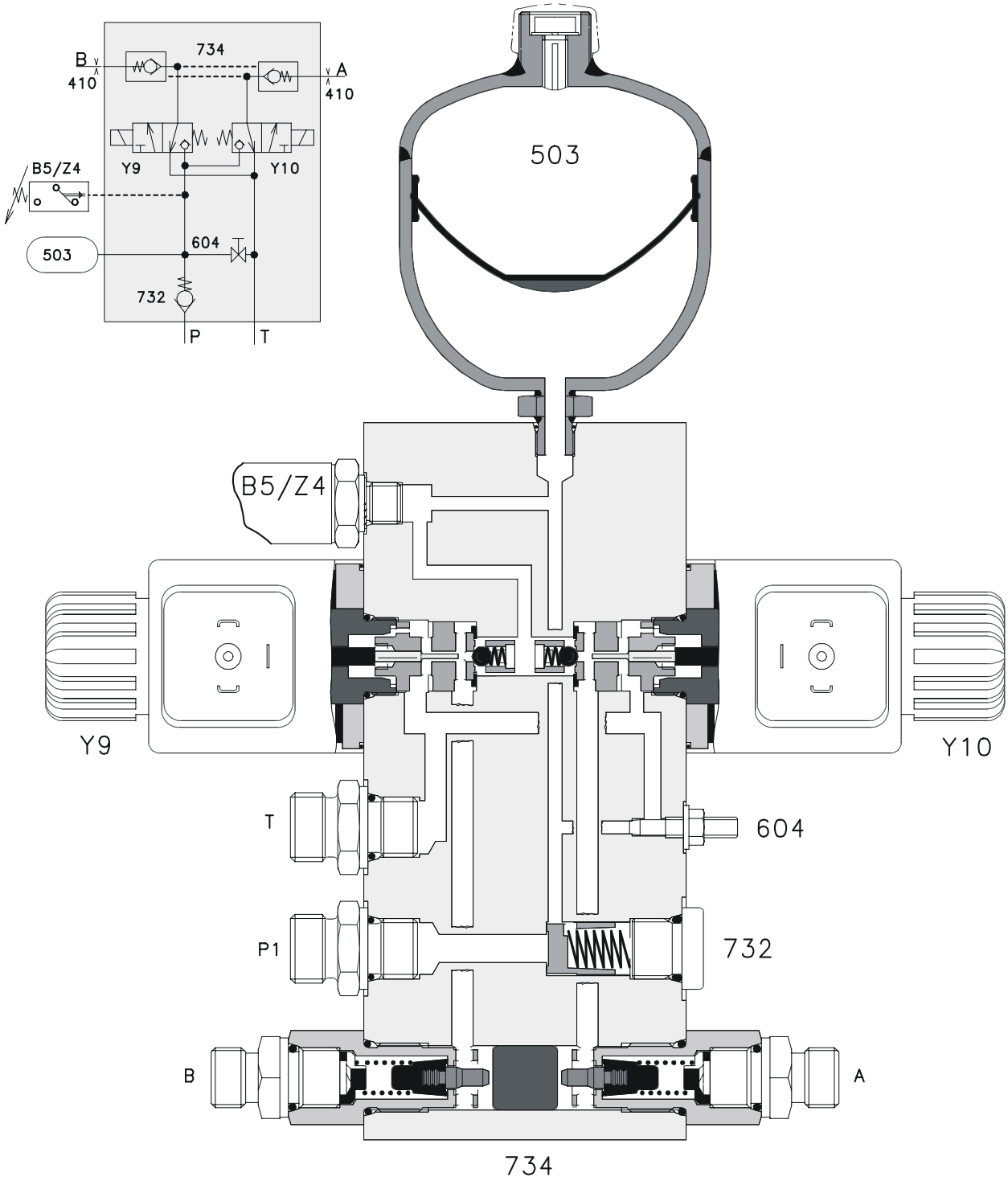

https://truckmanualshub.com/

Key to diagram

118	- Restrictor	∅ 1.5 mm
503	- Accumulator	0.7 l / 80 bar
604	- Pressure relief bolt	
732	- One-way valve (delivery valve)	
734	- One-way valve (lock-up valve unit)	
B5	- Oil pressure switch, NC contact	135/160±5 bar
Z4	- Oil pressure switch, NC contact	135/160±5 bar
Y9	- Solenoid valve (coil core with spring)	
Y10	- Solenoid valve (coil core with spring)	
T	-Working hydraulics returns connection	
P1	-Working hydraulics pump connection over returns valve	
A	-Steering ram connection	
B	-Steering ram connection	

Caution: When disassembling items 503, 732, B5/Z4, Y9 or Y10 the pressure in the accumulator must be released using the pressure relief screw (604).

Description of operation

Should the pressure in the accumulator drop below 135 ± 5 bar when the engine is running, then the oil pressure switch (B5/Z4) on the returns valve is operated. This causes the system pressure to be switched to the accumulator (503) via the one way valve (732).
When the system pressure is present, and the accumulator has been charged to 160 ± 5 bar, the oil pressure switch (B5/Z4) opens and the returns valve switches back into the neutral position. The one way valve (732) separates the stored energy and the systems working hydraulics.

The stored pressure is held in the closed system and lies on the balls of the two solenoid valves (Y9/Y10).

The module for the autopilot system will switch one of the solenoid valves (Y9/Y10), depending on steering direction required. The valve pin then presses down on the ball within the valve cartridge and shuts off the return line to the tank. The pressure then pushes against the ram and opens the one-way valve at A or B.
The return oil from the ram is then switched via the non-operated solenoid valve (Y9/Y10) back to the tank. The pressure increasing further now opens the opposite one-way valve and the steering cylinder is retracted or extended.

When the required angle for the steering has been achieved, then the Autopilot module switches off the solenoid valve (Y9/Y10). Should the pressure in the accumulator (503) fall below the 135 ± 5 bar due to steering demands, then the pressure switch (B5/Z4) will operate, the returns valve will be switched and pressure will be reinstated to the accumulator (503).

Note: More information on the valve parts and the returns valve can be found in the working hydraulics chapter.

https://truckmanualshub.com/

Checking the Autopilot system

Note: When checking the steering system stationary, it is advisable to support the rear of the machine slightly, thus removing the load.

Problem: - When the Autopilot system is energized, the steering system does not react. Manual operation and working hydraulics are working correctly.

Diagnostics: - Does the steering react, when the solenoid valves are operated manually, thus suggesting that the problem could be electric.

Does the steering react, only when another service on the working hydraulics system is operated, this would suggest that the oil pressure switch could be at fault.

Problem: - The hydraulic system overheats when the Autopilot system is energised.

Diagnostics: - Should the problem be sorted when the connector for the oil pressure switch is disconnected, then the fault could lie:

- Accumulator defective
- Oil pressure switch defective
- Valve spools leaking
- Delivery valve leaking
- Pressure relief screw leaking

Problem: - When the Autopilot system is switched off, the steering is heavy in one direction when operating the steering manually.

Diagnostics: - The relative lock valve should be checked.

Problem: - The machine always steers one way or the other.

Diagnostics: - The relative lock valve should be checked, or the seal in the steering ram.

https://truckmanualshub.com/

Contents

Working hydraulics –

Standard machine functions

3.1 Circuit diagram for straw walker machines 3-2

3.2 Circuit diagram for rotor machines 3-6

3.3 Position of the components 3-10

3.4 Valve unit 3-12
Operation of the valve unit 3-14

3.5 Main valve (from machine no.) 3-16
Pressure relief valve 3-17
Operation of the returns valve 3-18
Operation of front end attachment, raise / lower 3-18
Flow control valve 3-21

Main valve (to machine no.) 3-22
Pressure relief valve 3-23
Operation of the returns valve 3-24
Operation of front end attachment, raise / lower 3-25
Flow control valve 3-27

3.6 Swivelling the unloading auger 3-28
Solenoid valve 3-28
Function 3-29
Hydraulic ram **(from machine no.)** 3-30
Hydraulic ram **(to machine no.)** 3-32

3.7 Threshing concave adjustment 3-34
Solenoid valve 3-34
Function 3-35
Hydraulic ram 3-36
Pressure relief valve 3-38

3.8 Threshing drum speed adjustment 3-40
Solenoid valve 3-40
Function 3-41
Hydraulic ram 3-42

3.9 Reverser for the front end attachment 3-44
Solenoid valve 3-44
Function 3-45
Hydraulic ram 3-46
Hydraulic motor 3-47

3.10 Front end attachment quick release coupling 3-48

https://truckmanualshub.com/

3.1 Circuit diagram for straw walker machines

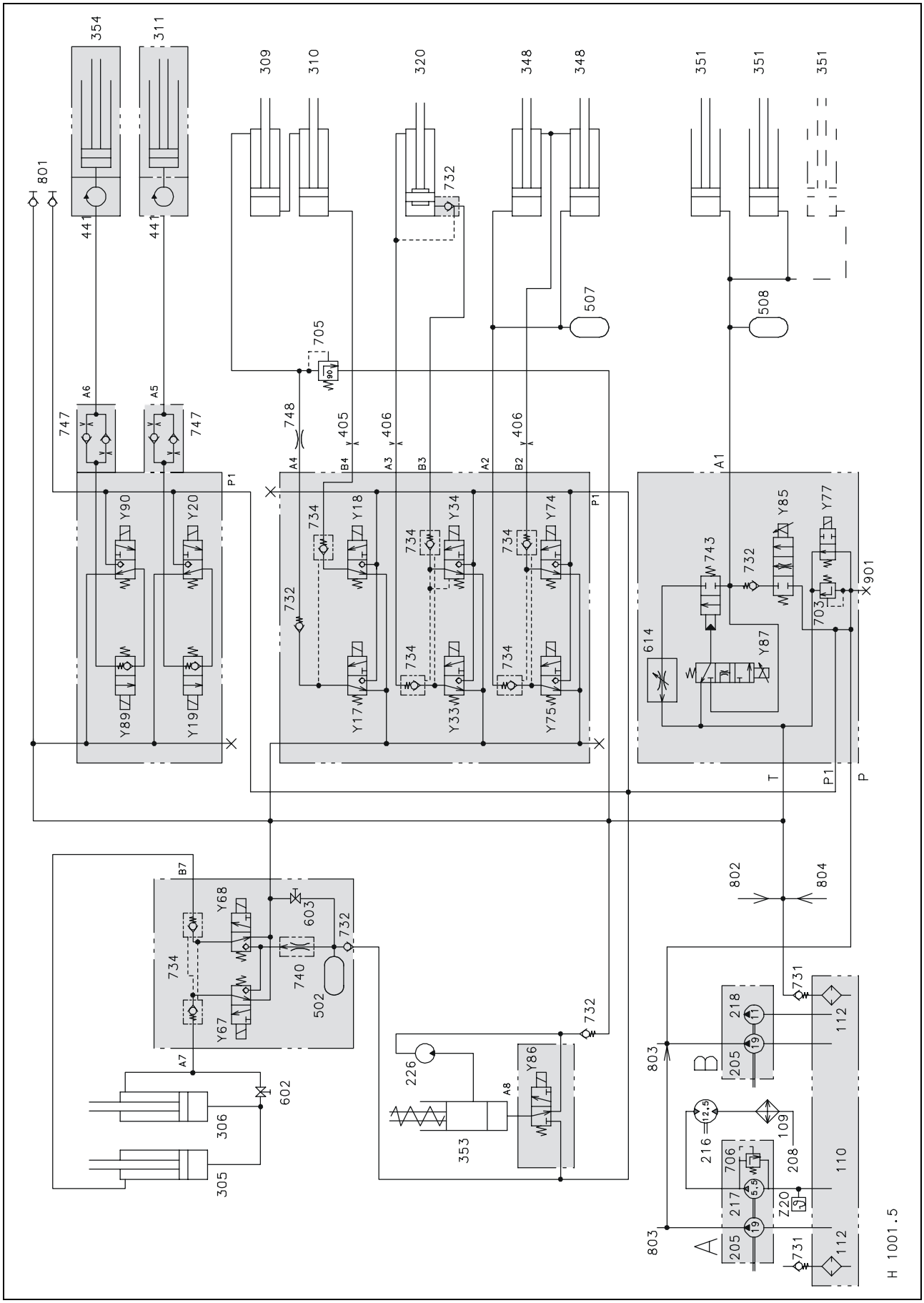

https://truckmanualshub.com/

Key to diagram I

109	- Hydraulic system oil cooler	
110	- Oil tank	
112	- Sieve filter	
205	- Gear pump for working hydraulics	14 cm³
208	- Hydrostatic ground drive pump	
216	- Rotary radiator screen drive motor	12.5 cm³
217	- Rotary radiator screen drive pump	5.5 cm³
218	- Gear pump for steering hydraulics	11 cm³
226	- Hydraulic motor – reverse front attachment	OMR 200
305	- Hydraulic ram, right-hand transverse control	Ø 70/50 mm
306	- Hydraulic ram, left-hand transverse control	Ø 70/50 mm
309	- Hydraulic ram, concave left-hand	Ø 40/22 mm
310	- Hydraulic ram, concave right-hand	Ø 50/30 mm
311	- Hydraulic ram, threshing drum variable-speed drive	Ø 35 mm
320	- Hydraulic ram, swinging the grain tank unloading tube	Ø 50/25 mm
348	- Hydraulic ram, straw chopper position	Ø 40/22 mm
351	- Hydraulic ram, front attachment raise/lower	Ø 55 mm
353	- Hydraulic ram, reversing the front attachment	Ø 22 mm
354	- Hydraulic ram, front attachment variable-speed drive	Ø 35 mm
405	- Orifice plate	Ø 0.6 mm
406	- Orifice plate	Ø 0.8 mm
441	- Rotary coupling	
502	- Transverse control accumulator	0.7 l / 80 bar
507	- Straw chopper position accumulator	0.075 l / 60 bar
508	- Front attachment damper accumulator	0.6 l / 180 bar
602	- Shut-off valve	
603	- Pressure relief bolt	
614	- Flow control valve	5 – 50 l/min.
703	- Pressure relief valve	175 +15 bar
705	- Pressure relief valve	90 ± 5 bar
706	- Pressure relief valve	100 bar
731	- One-way valve of return line	0.1 bar
732	- One-way valve	
734	- One-way valve (lock-up valve unit)	
740	- Flow control valve	
743	- Return valve, lower front attachment (lower quickly)	
747	- Double one-way restrictor valve	Ø 0.3 mm
748	- Restrictor	
801	- Quick release coupling (P/T) for front attachments	
802	- Return line of Uni-spreader solenoid valve	
803	- Autopilot feed	
804	- Autopilot return	
901	- Working hydraulics test port	

P	- Master valve feed
P1	- Parallel port of directional control valves to master valve
T	- Tank port (return)

Note: A – from 2002
B – up to 2001

https://truckmanualshub.com/

Circuit diagram for straw walker machines

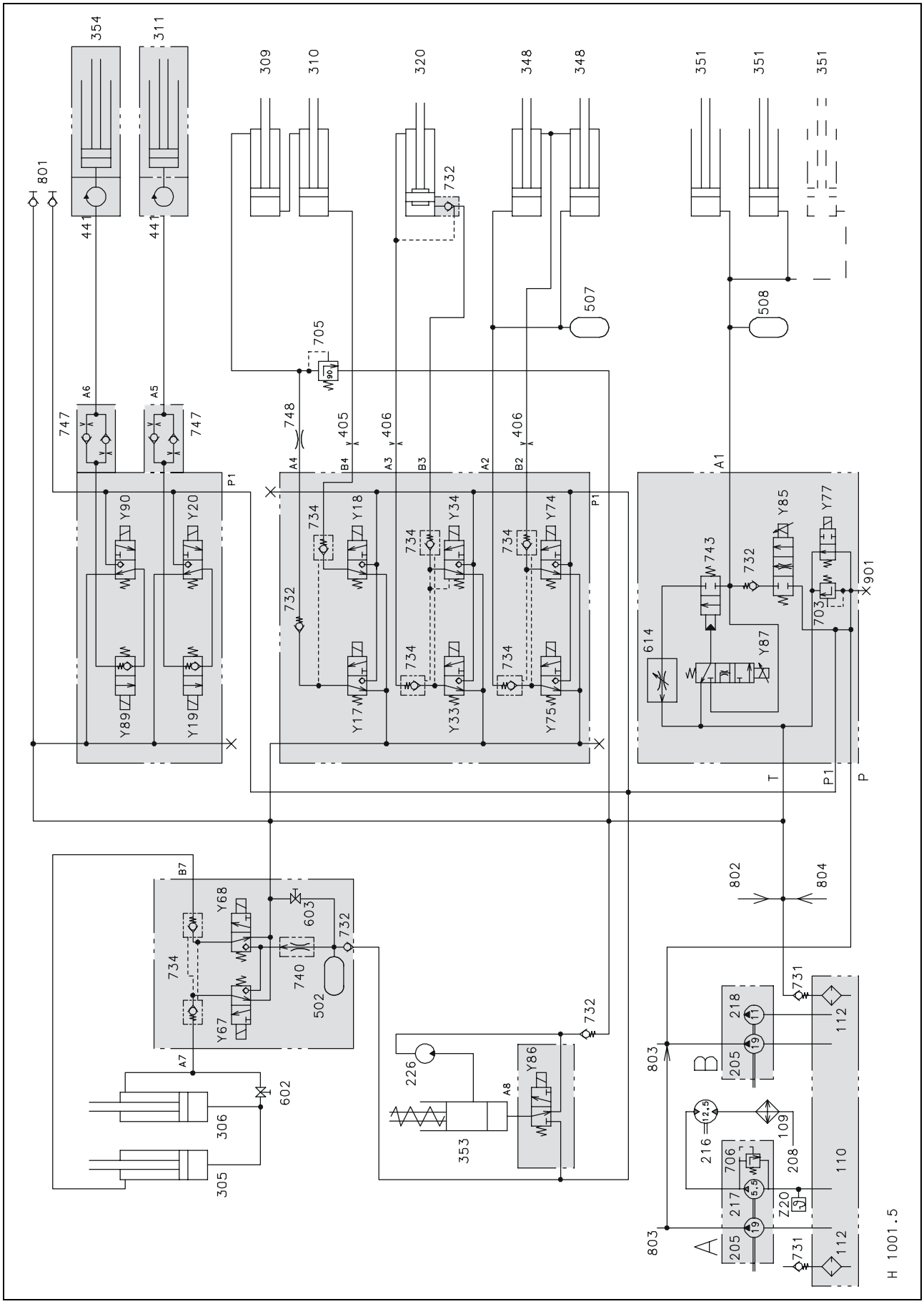

https://truckmanualshub.com/

Key to diagram II

P	- To returns valve
P1	- Parallel connection to valves from the returns valve
T	- Tank port (returns)
Y17	- Solenoid valve for narrowing the threshing concave (close)
Y18	- Solenoid valve for widening the threshing concave (open)
Y19	- Solenoid valve for slowing down the threshing drum speed
Y20	- Solenoid valve for speeding up the threshing drum speed
Y33	- Solenoid valve for swinging out the unloading auger
Y34	- Solenoid valve for swinging in the unloading auger
Y67	- Solenoid valve for cutterbar cross-levelling (left-hand side)
Y68	- Solenoid valve for cutterbar cross-levelling (right-hand side)
Y74	- Solenoid valve for moving straw chopper in work position
Y75	- Solenoid valve for moving straw chopper in park position
Y77	- Master valve solenoid valve
Y85	- Solenoid valve for raising the front attachment
Y86	- Solenoid valve for reversing the front attachment
Y87	- Solenoid valve for lowering the front attachment
Y89	- Solenoid valve for slowing down the front attachment variable-speed drive
Y90	- Solenoid valve for speeding up the front attachment variable-speed drive
Z20	- Hydraulic oil temperature switch
A1	- Hydraulic ram port for raising / lowering the front attachment
A2	- Hydraulic ram port for moving the straw chopper in park position
A3	- Hydraulic ram port for swinging out the grain tank unloading auger
A4	- Hydraulic ram port for closing the threshing concave (close)
A5	- Hydraulic ram port for threshing drum speed
A6	- Hydraulic ram port for front attachment speed
A7	- Hydraulic ram port for cutterbar cross-levelling, right-hand side
A8	- Hydraulic ram port for reversing the front attachment
B2	- Hydraulic ram port for moving the straw chopper in work position
B3	- Hydraulic ram port for swinging in the grain tank unloading auger
B4	- Hydraulic ram port for opening the threshing concave (open)
B7	- Hydraulic ram port for cutterbar cross-levelling, left-hand side

https://truckmanualshub.com/

3.2 Circuit diagram for rotor machines

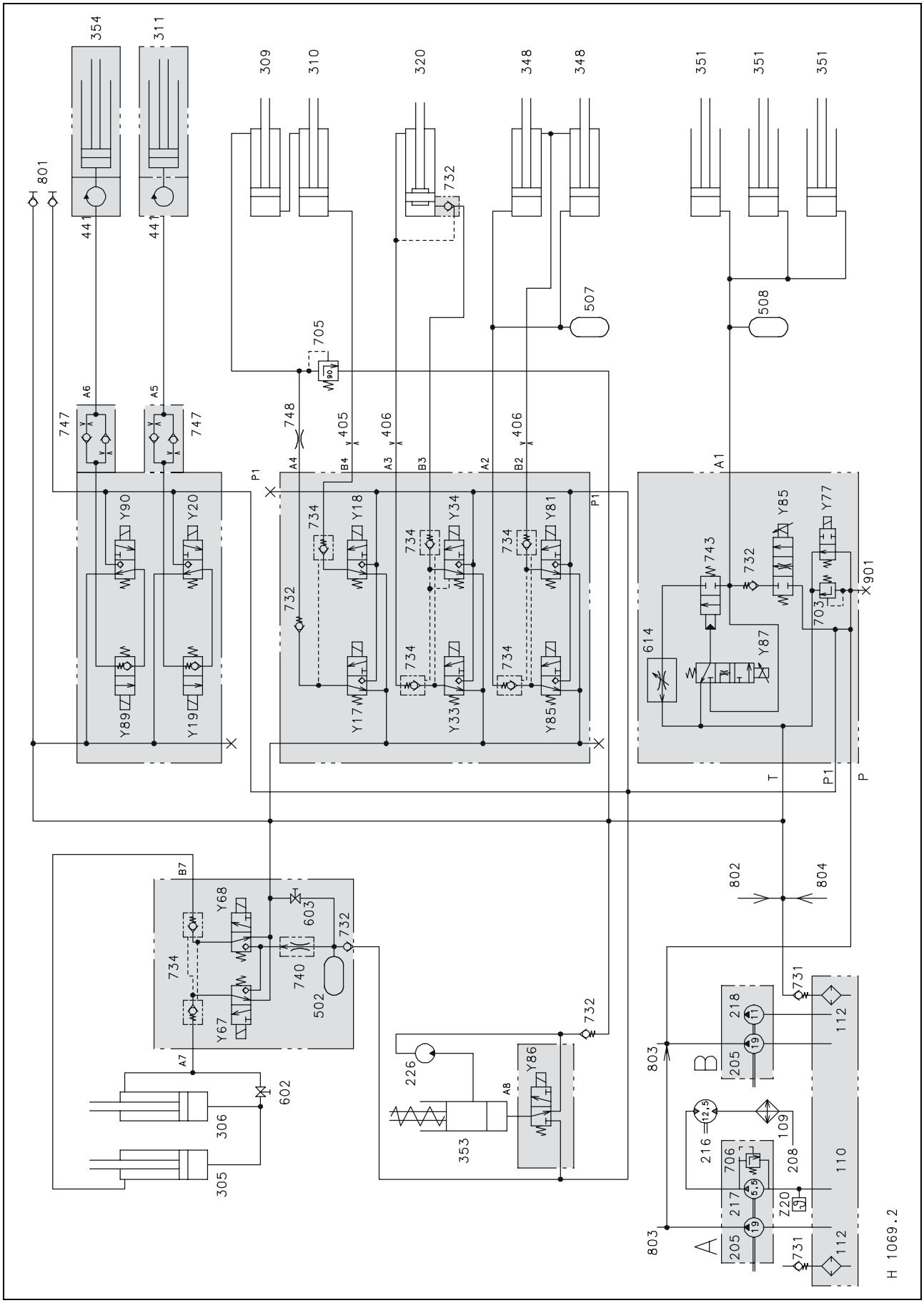

https://truckmanualshub.com/

Key to diagram I

109	- Hydraulic system oil cooler	
110	- Oil tank	
112	- Sieve filter	
205	- Gear pump for working hydraulics	14 cm³
208	- Hydrostatic ground drive pump	
216	- Rotary radiator screen drive motor	12.5 cm³
217	- Rotary radiator screen drive pump	5.5 cm³
218	- Gear pump of steering hydraulics	11 cm³
226	- Hydraulic motor – reverse front attachment	OMR 200
305	- Hydraulic ram, right-hand transverse control	Ø 70/50 mm
306	- Hydraulic ram, left-hand transverse control	Ø 70/50 mm
309	- Hydraulic ram, concave left-hand	Ø 40/22 mm
310	- Hydraulic ram, concave right-hand	Ø 50/30 mm
311	- Hydraulic ram, threshing drum variable-speed drive	Ø 35 mm
320	- Hydraulic ram, swinging the grain tank unloading tube	Ø 50/25 mm
348	- Hydraulic ram, straw chopper position	
351	- Hydraulic ram, front attachment raise/lower	Ø 55 mm
353	- Hydraulic ram, reversing the front attachment	Ø 22 mm
354	- Hydraulic ram, front attachment variable-speed drive	Ø 35 mm
405	- Orifice plate	Ø 0.6 mm
406	- Orifice plate	Ø 0.8 mm
441	- Rotary coupling	
502	- Transverse control accumulator	0.7 l / 80 bar
507	- Straw chopper position accumulator	0.075 l / 60 bar
508	- Front attachment damper accumulator	0.6 l / 180 bar
602	- Shut-off valve	
603	- Pressure relief bolt	
614	- Flow control valve	5 – 50 l/min.
703	- Pressure relief valve	175^{+15} bar
705	- Pressure relief valve	90 ± 5 bar
706	- Pressure relief valve	100 bar
731	- One-way valve of return line	0.1 bar
732	- One-way valve	
734	- One-way valve (lock-up valve unit)	
740	- Flow control valve	
743	- Return valve, lower front attachment (lower quickly)	
747	- Double one-way restrictor valve	Ø 0.3 mm
748	- Restrictor	
801	- Quick release coupling (P/T) for front attachments	
802	- Return line of Uni-spreader solenoid valve	
803	- Autopilot feed	
804	- Autopilot return	
901	- Working hydraulics test port	

P	- To returns valve
P1	- Parallel connection to valves from the returns valve
T	- Tank port (return)

Note: A – from 2002
B – up to 2001

https://truckmanualshub.com/

Circuit diagram for rotor machines

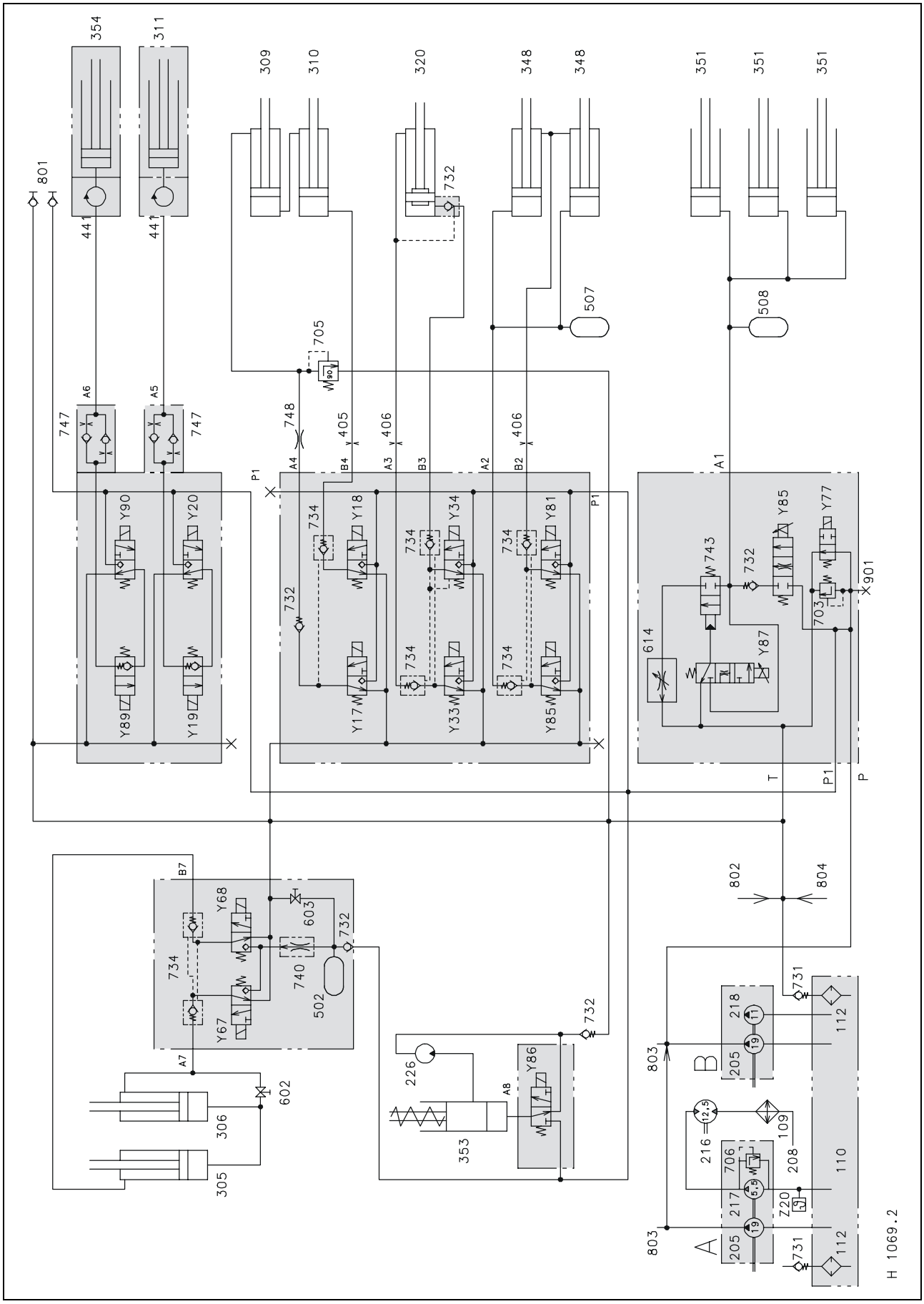

https://truckmanualshub.com/

Key to diagram II

P	- To returns valve
P1	- Parallel connection to valves from the returns valve
T	- Tank port (returns)
Y17	- Solenoid valve for narrowing the threshing concave (close)
Y18	- Solenoid valve for widening the threshing concave (open)
Y19	- Solenoid valve for slowing down the threshing drum speed
Y20	- Solenoid valve for speeding up the threshing drum speed
Y33	- Solenoid valve for swinging out the unloading auger
Y34	- Solenoid valve for swinging in the unloading auger
Y67	- Solenoid valve for cutterbar cross-levelling (left-hand side)
Y68	- Solenoid valve for cutterbar cross-levelling (right-hand side)
Y77	- Master valve solenoid valve
Y81	- Solenoid valve for moving Uni-spreader in work position
Y82	- Solenoid valve for moving Uni-spreader in park position
Y85	- Solenoid valve for raising the front attachment
Y86	- Solenoid valve for reversing the front attachment
Y87	- Solenoid valve for lowering the front attachment
Y89	- Solenoid valve for slowing down the front attachment variable-speed drive
Y90	- Solenoid valve for speeding up the front attachment variable-speed drive
Z20	- Hydraulic oil temperature switch
A1	- Hydraulic ram port for raising / lowering the front attachment
A2	- Hydraulic ram port for moving the straw chopper in park position
B2	- Hydraulic ram port for moving the straw chopper in work position
A3	- Hydraulic ram port for swinging out the grain tank unloading auger
B3	- Hydraulic ram port for swinging in the grain tank unloading auger
A4	- Hydraulic ram port for closing the threshing concave (close)
B4	- Hydraulic ram port for opening the threshing concave (open)
A5	- Hydraulic ram port for threshing drum speed
A6	- Hydraulic ram port for front attachment speed
A7	- Hydraulic ram port for cutterbar cross-levelling, right-hand side
B7	- Hydraulic ram port for cutterbar cross-levelling, left-hand side
A8	- Hydraulic ram port for reversing the front attachment

https://truckmanualshub.com/

3.3 Position of the components

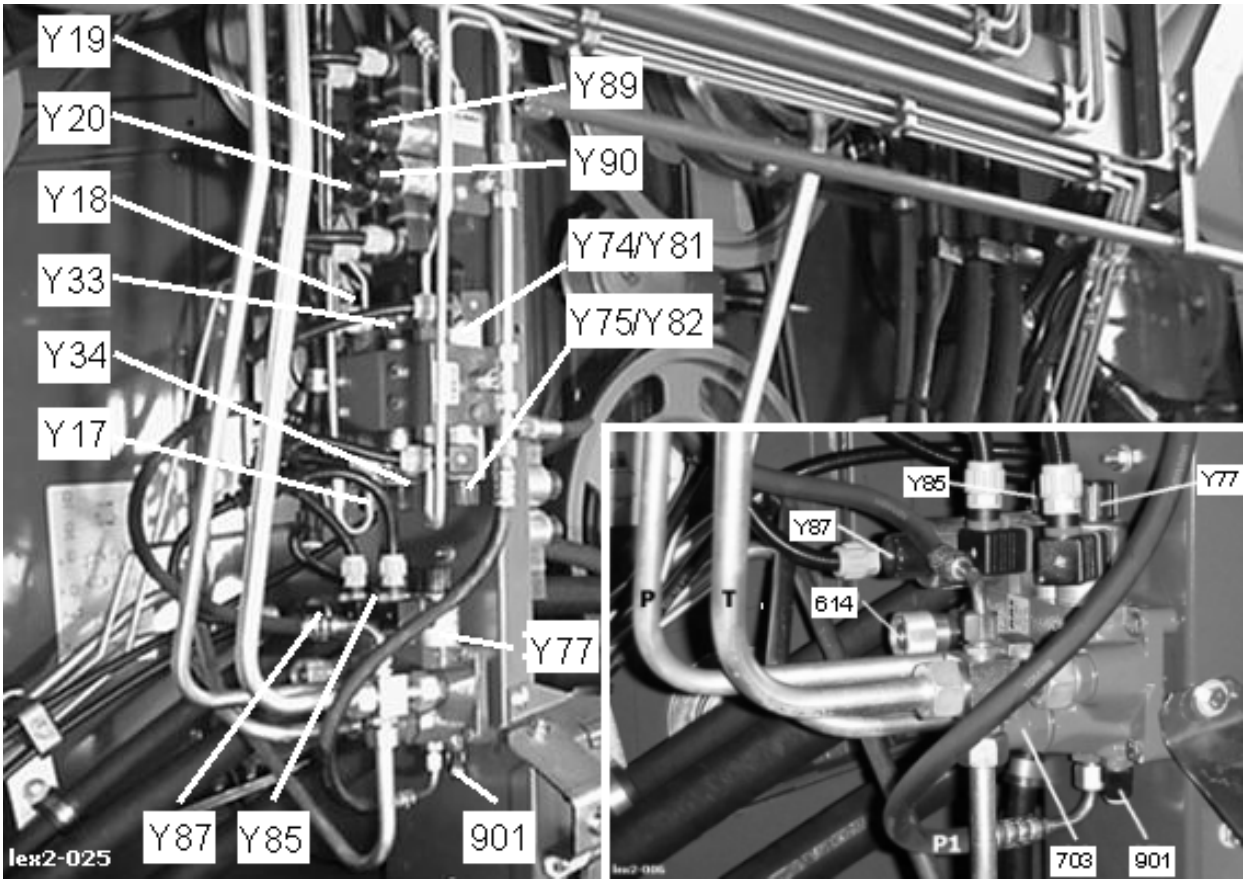

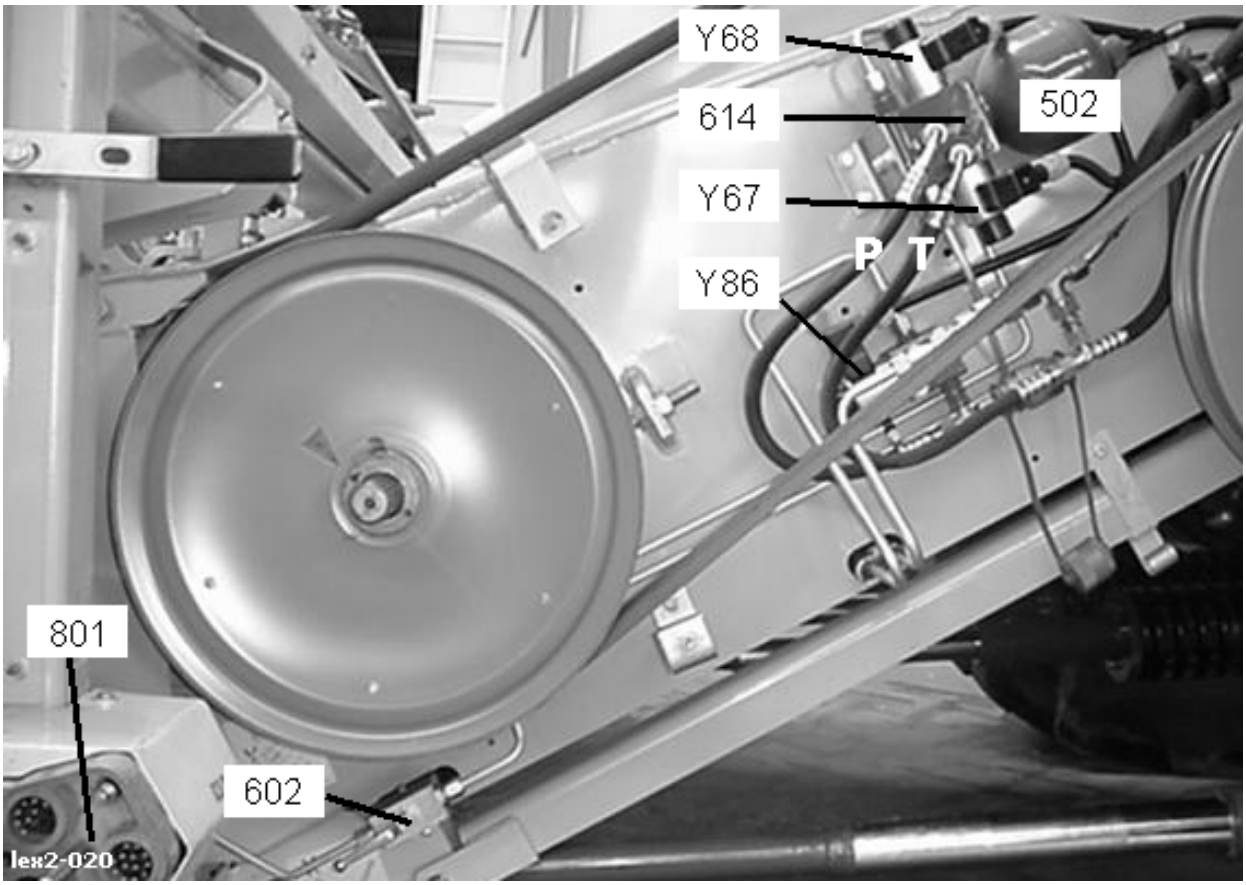

https://truckmanualshub.com/

Key to diagram

502	- Cross-levelling accumulator	0.7 l / 80 bar
602	- Tap	
614	- Flow control valve	5 – 50 l/min.
703	- Pressure relief valve	175^{+15} bar
740	- Flow control valve	
801	- Quick release (P/T) for front attachments	
901	- Working hydraulics test port	

Y17	- Solenoid valve for narrowing the threshing concave (close)
Y18	- Solenoid valve for widening the threshing concave (open)
Y19	- Solenoid valve for slowing down the threshing drum speed
Y20	- Solenoid valve for speeding up the threshing drum speed
Y33	- Solenoid valve for swinging out the unloading auger
Y34	- Solenoid valve for swinging in the unloading auger
Y67	- Solenoid valve for cutterbar cross-levelling (left-hand side)
Y68	- Solenoid valve for cutterbar cross-levelling (right-hand side)
Y74	- Solenoid valve for moving straw chopper in work position
Y75	- Solenoid valve for moving straw chopper in park position
Y77	- Master valve solenoid valve
Y81	- Solenoid valve for moving Uni-spreader in work position
Y82	- Solenoid valve for moving Uni-spreader in park position
Y85	- Solenoid valve for raising the front attachment
Y86	- Solenoid valve for reversing the front attachment
Y87	- Solenoid valve for lowering the front attachment
Y89	- Solenoid valve for slowing down the front attachment variable-speed drive
Y90	- Solenoid valve for speeding up the front attachment variable-speed drive

P	- To returns valve
P1	- Parallel connection to valves from the returns valve
T	- Return to tank

https://truckmanualshub.com/

3.4 Valve cartridges

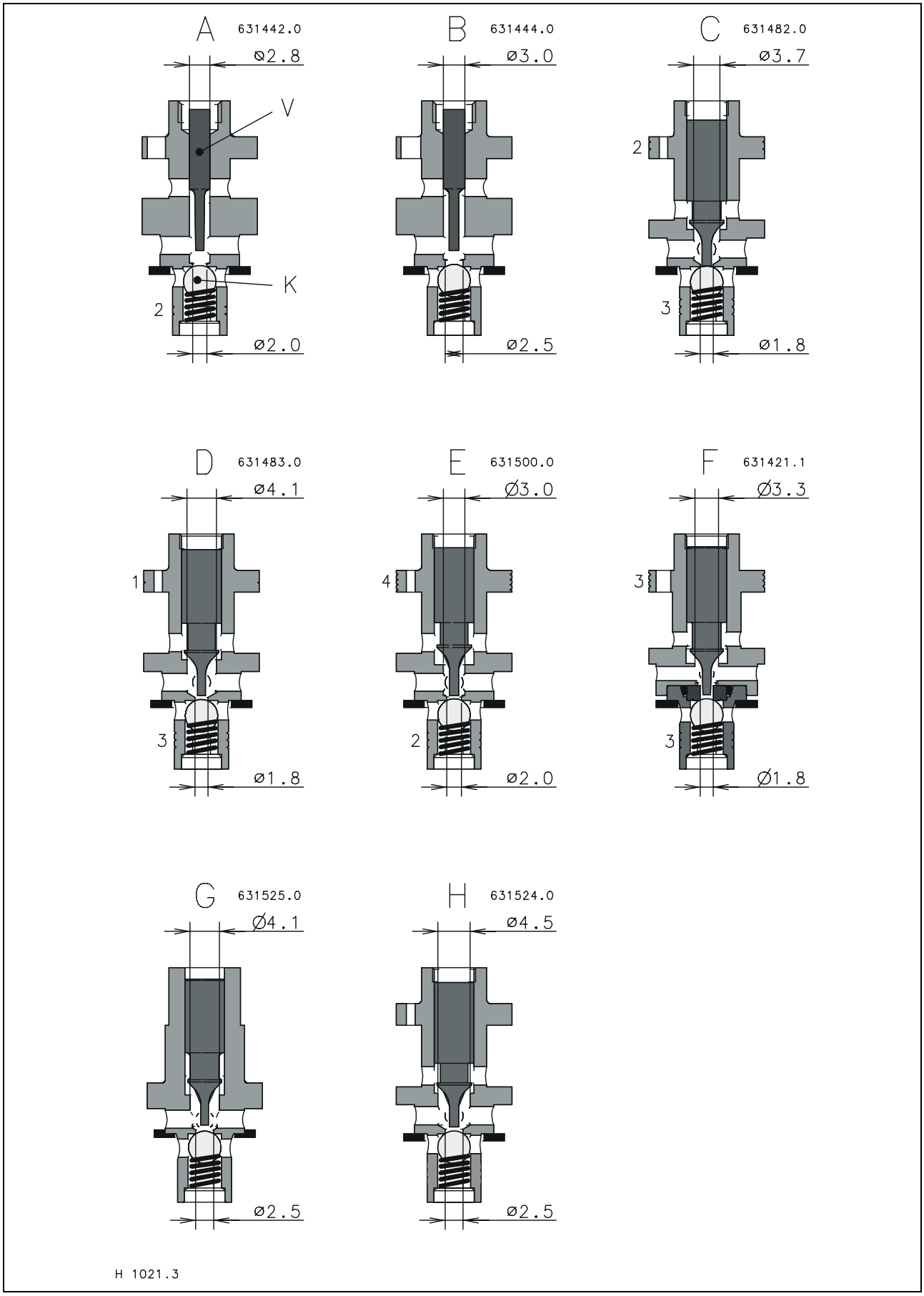

https://truckmanualshub.com/

Valve cartridges in the directional-control valves

Pos.	Usage	Top markings	Lower markings	Part number
A	Autopilot	None	2	**631 442.0**
B	Threshing drum speed faster Intake housing speed faster Reel forwards / backwards Reel raise Swinging out the unloading auger Cutterbar cross levelling Cutterbar folding in/out Safety valve for folding cutterbar Locking / unlocking the cutterbar springs Vario cutterbar in / out Uni-spreader up/down Maize header folding Snapping plates in / out	None	None	**631 444.0**
C	Straw chopper forwards / backwards Folding in the unloading auger Reel lower	2	3	**631 482.0**
D	Cutterbar lower *	1	3	**631 483.0**
E	Threshing concave open / close	4	2	**631 500.0**
F	Threshing speed slower Intake housing slower	3	3	**631 421.1**
G	Safety valve for the unloading auger *	No Lip	None	**631 525.0**
H	Uni-spreader control *	None	None	**631 524.0**

K – Ball
V – Control spool

Note: Whenever the valves are removed or replaced, then a new copper washer **094 001.0** must be fitted.

Some of the solenoid valve coils are fitted with a returns spring **213 030.1**, and have been marked with the letter “F” on the side. During a repair, solenoids not fitted with the returns spring, can be replaced against one that has.

* - up to serial no. … (see spare parts catalogue)

https://truckmanualshub.com/

Function of the valve cartridges

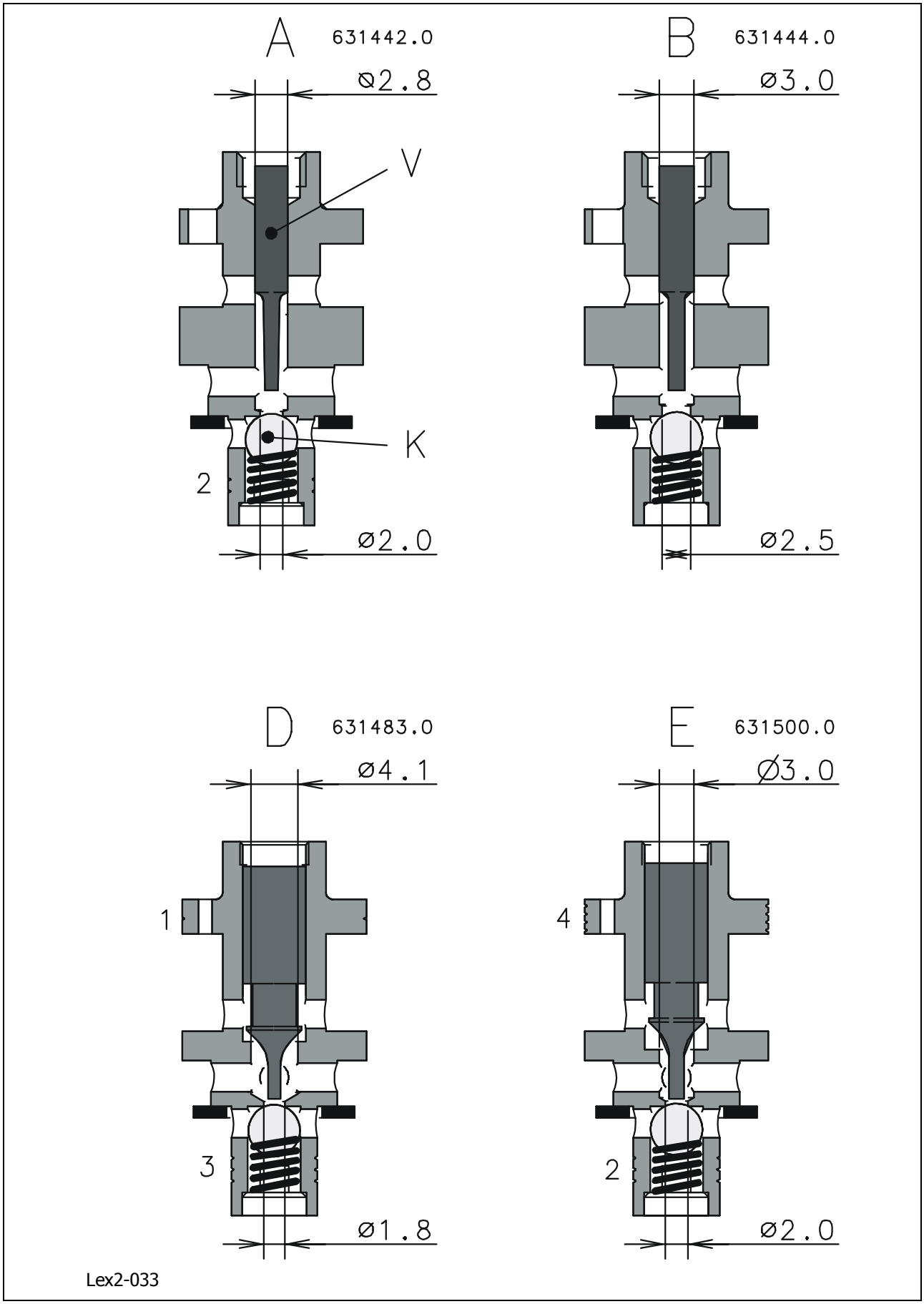

https://truckmanualshub.com/

Description of operation

The following describes the operation of the individual valve cartridges, this also enables the difference of each valve to be noted.

631 444.0

Ball seat 2.5 mm
Spool 2.8 mm

This valve is designed with a spool control valve, whereby the return to tank is closed before the ball ist displaced from its seat. A positive switching is possible when the system is over-pressurised, or when peak pressures are experienced in the tank lines.
This valve is used when these facts could effect the operation of the system. The stroke of the valve is dependent on the stroke of the solenoid, where max force is obtained at the end of the stroke and the switching delay time is dependent on the redidual magnetism of the solenoid.

631 442.0

Ball seat 2.0 mm
Spool 2.8 mm

This valve operates in much the same way as the 631 444.0.

The smaller ball seat reduces the amount of flow but enables the valve to operate quickly when not much oil flow is delivered.

631 483.0

Ball seat 1.8 mm
Pin seat 4.1 mm

The pin valve has via the pin a mechanical end stop, which means that the solenoid does not reach its stops. This valve in comparison to the spool control valve switches off very quickly. In practice there is no hydraulic return time, and the valve is returned by a spring in the solenoid (marked with an “F” on the solenoid).
The large pin has the task of being the pressure relief valve. The small ball acts as restrictor and allows the valve to operate against higher pressures when small oil flows are involved.

631 500.0

Ball seat 2.0 mm
Pin seat 2.9

This valve operates in much the same way as the 631 483.0.

With the smaller pin seat there is no pressure-relief function since the force from the solenoid valve is sufficient for a system pressure of at least 190 bar.

https://truckmanualshub.com/

3.5 Main valve (spare part no. 631 581.0)

Returns valve, solenoid valve for front end attachment raise / lower

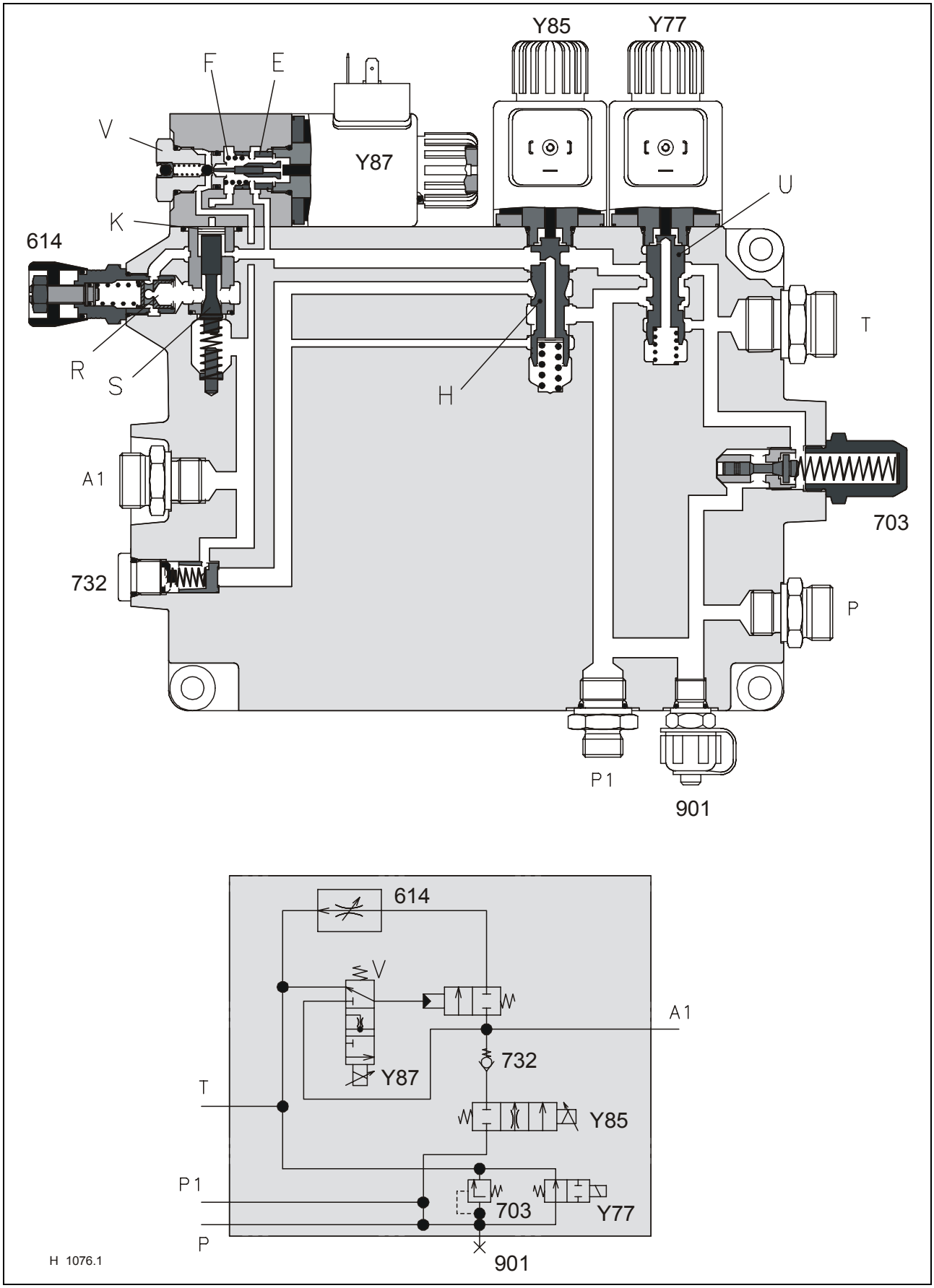

https://truckmanualshub.com/

Key to diagram

614	- Flow control valve . . . . . 5 – 50 l/min.
703	- Pressure relief valve . . . . . 175^{+15} bar
732	- One-way valve (delivery valve)
901	- Working hydraulics test port
Y77	- Master valve solenoid valve
Y85	- Solenoid valve for raising the front attachment
Y87	- Solenoid valve for lowering the front attachment
A1	- Hydraulic ram for raising / lowering the front end attachment
T	- Connection to tank
P	- Connection to pump
P1	- Parallel connection to other directional control valves
A	- Shim
E	- Pilot valve
F	- Pressure spring
H	- Spool for raising the front end attachment
K	- Plunger
R	- Control spool . . . . . 5-50 l/min
S	- Return valve for lowering the front end attachment
U	- Spool for the returns valve
V	- Control valve

Pressure relief valve

The spring for the pressure relief valve (703) is configured for a system pressure of **175^{+15} bar**. By adding or removing shims, the pressure settings can be corrected.

Shim 0.5 mm is approx. 10 bar
Shim 1.2 mm is approx. 23 bar

Note: These values are given to produce an average system pressure of 180 bar. After any adjustment or change, the system pressure must be checked.

https://truckmanualshub.com/

Basic settings

To ensure that the spool (H) for the front end attachment is in the correct position, the distance between the top edge of the spool (H) and the housing, with the solenoid (Y85) removed should be **4.3 mm**. The position can be corrected by inserting or removing shims from the top of the spring.

Under the spool for the returns valve (U), there is a weaker pressure spring than that of the spool (H).

The drop speed of the front end attachment can be adjusted on the flow control valve (614) and needs to be adjusted so that the total drop time is about **5-6 sec**.

Operation of the returns valve

The primary function of the returns valve (Y77) is to stop the flow of oil between the P and the T when a system requires it. The exception is when a component requires to be discharged to tank.

In the neutral position, the returns valve (Y77) is not switched, and the oil flows across the ring channel of the spool (U) and back to tank. Because of the size of the channel, the back pressure is slight.

Should there be the requirement of a component for pressure, the returns valve (Y77) will be switched at the same time as the component. The spool (U) closes the connection between P and T. The connection is closed, firstly by closing the ring channel, so that a gentle switch over is achieved.

Should the system pressure exceed 175 ± 15 bar, then the pressure relief valve (703) is opened and the excess is dumped to tank.

https://truckmanualshub.com/

Operation of the front end attachment
Slow raise

When the function “slow raise” has been selected, then the solenoid (Y85) is switched with a pulse signal of 80Hz and approx. 50% PWM (Pulse width modulation). At the same time, the returns valve (Y77) will be switched with 12 V DC.

Due to the pulsed signal, the spool (H) is then operated, but only so much that the oil flows via restrictor in the spool and the lower ring channel. The restricted flow then passes the one way valve (732) and out to the ram via (A1) and the front end attachment is raised slowly. The rest of the oil flows back to the tank via the pressure relief valve (703).

Operation of the front end attachment
Fast raise

When the function “fast raise” is selected, then the solenoid (Y85) and the returns valve (Y77) are both switched with 12 V DC.

The spool (H) is then pressed to its limits and the oil can flow via both ring channels. The full volume of oil then flows via the one way valve (732) to the ram via (A1) and the front end attachment is raised quickly.

Pulse width Modulation (PWM)

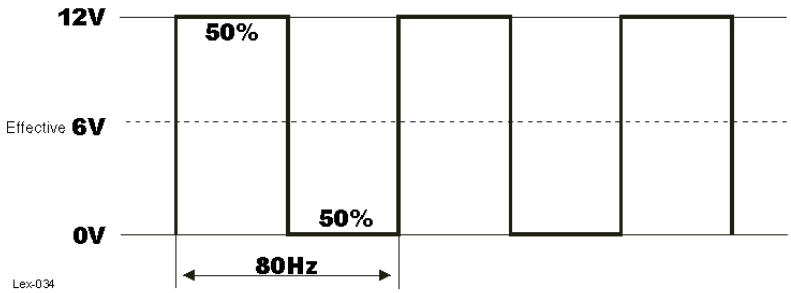

https://truckmanualshub.com/

Operation of the front end attachment
Slow lower

When the function “slow lower” has been selected, then the solenoid (Y87) is switched with a pulse signal of 80Hz at approx. 45% PWM (Pulse width modulation) using the CAC module.

The switching signal is sufficient to push the ball off the seat of the valve (V), but is not enough to press against the force of the spring (F). The spool (E) is therefore not in a position to close the ring channel for the return oil. The weight of the front end attachment forces oil over the ball seat, through the holes of the spool (E) and in the return line back to tank.
The reduced flow rate via the spool means that the front end attachment lowers at a slower rate.

Operation of the front end attachment
Fast lower

With the function “fast lower”, the solenoid (Y87) is operated with the full 12 V DC.

The ball is unseated from the control valve (V) and the spring force (F) is overcome with the force exerted by the solenoid valve. The spool (E) closes the return ring channel. The weight of the front end attachment forces the oil onto the surface area of (K). Due to the difference in surface areas, the valve (S) is then forced open. The oil then passes through valve (S), the control spool (R) and then back to tank.
The drop rate of the front end attachment is in this case mainly dependent on the flow control valve (614).

https://truckmanualshub.com/

Flow control valve

With the function “front end attachment fast drop”, the restricted oil flows through the restrictor in the flow control valve (614), back to tank.
The pressure of the returning oil presses against the spool of the flow control valve, which moves back against the spring pressure, opening up the ring channel allowing the oil to flow back to tank. Should the pressure drop from the connection (A), then the flow control opens and allows more flow through the restrictor.
The regulating function of the valve is dependent on the pressure from the connector (A) and the force of the spring within the valve.

The flow rate can be adjusted from outside, by use of a hand wheel. By releasing the tension on the spring, reduces the amount of pressure required to operate the valve and therefore reduces the amount of oil allowed to flow through.

Note

The difference with the main valve (spare part no. 631 560.1) can be seen here in the pilot block of the function "Front attachment lower". In this version (spare part no. 631 581.0) the valve (E) works independently from the load pressure of the front attachment. This is done for safety's sake on heavy front attachments or when only two rams are fitted.

Depending on this version, a corresponding CAC module must be used.

https://truckmanualshub.com/

Main valve (spare part no. 631 560.1)
Returns valve, solenoid valve for front end attachment raise / lower

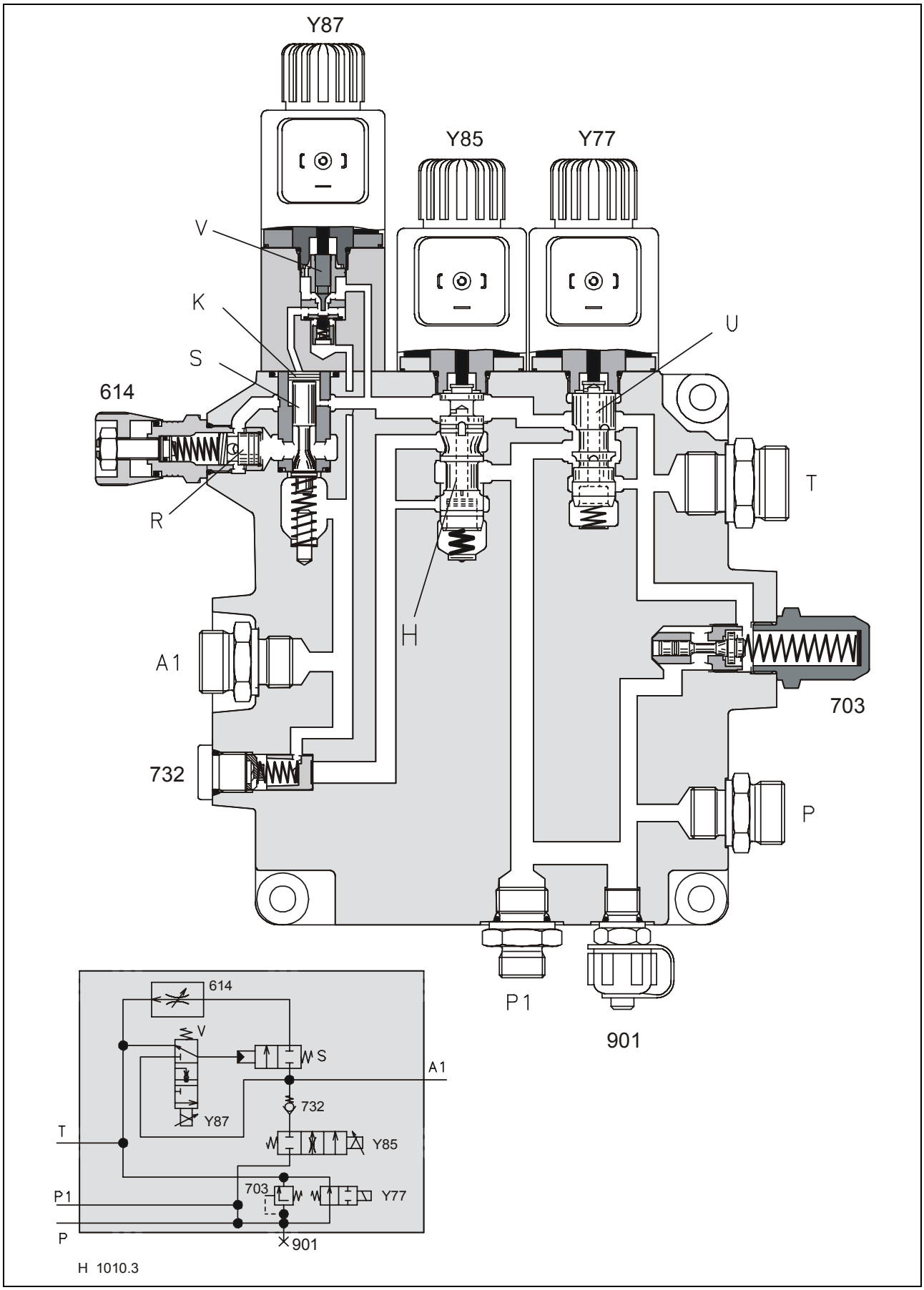

https://truckmanualshub.com/

Key to diagram

614	- Flow control valve . . . . . 5 – 50 l/min.
703	- Pressure relief valve . . . . . 175^{+15} bar
732	- One-way valve (delivery valve)
901	- Working hydraulics test port
Y77	- Master valve solenoid valve
Y85	- Solenoid valve for raising the front attachment
Y87	- Solenoid valve for lowering the front attachment
A1	- Hydraulic ram for raising / lowering the front end attachment
T	- Connection to tank
P	- Connection to pump
P1	- Parallel connection to other valves
H	- Spool for raising the front end attachment
K	- Plunger
R	- Control spool . . . . . 5-50 l/min
S	- Return valve for lowering the front end attachment
U	- Spool for the returns valve
V	- Control valve
D	- Shims

Pressure relief valve

The spring for the pressure relief valve (703) is configured for a system pressure of **175^{+15} bar**. By adding or removing shims, the pressure settings can be corrected.

Shim 0.5 is approx. 10 bar
Shim 1.2 mm is approx. 23 bar

Note: These values are given to produce an average system pressure of 180 bar. After any adjustment or change, the system pressure must be checked.

https://truckmanualshub.com/

Basic settings

To ensure that the spool (H) for the front end attachment is in the correct position, the distance between the top edge of the spool (H) and the housing, with the solenoid (Y85) removed should be **4.3 mm**. The position can be corrected by inserting or removing shims from the top of the spring in the spool (H).

Under the spool for the returns valve (U) there is a weaker pressure spring than of the spool (H)
The drop speed of the front end attachment can be adjusted on the flow control valve (614) and needs to be adjusted so that the total drop time is about **5-6 sec**.

Operation of the returns valve

The primary function of the returns valve (Y77) is to stop the flow of oil between the P and the T when a system requires it. The exception is when a component requires to be discharged to tank.

In the neutral position, the returns valve (Y77) is not switched, and the oil flows across the ring channel of the spool (U) and back to tank. Because of the size of the channel, the back pressure is slight.

Should there be the requirement of a component for pressure, the returns valve (Y77) will be switched at the same time as the component. The spool (U) closes the connection between P and T. The connection is closed, firstly by closing the upper ring channel, so that a gentle switch over is achieved.

Should the system pressure exceed 175 ± 15 bar, then the pressure relief valve (703) is opened and the excess is dumped to tank.

https://truckmanualshub.com/

Operation of the front end attachment
Slow raise

When the function “slow raise” has been selected, then the solenoid (Y85) is switched with a pulse signal of 80Hz and approx. 50% PWM (Pulse width modulation). At the same time, the returns valve (Y77) will be switched with 12 V DC.

Due to the pulsed signal, the spool (H) is then operated, but only so much that the oil flows via restrictor in the spool and the lower ring channel. The restricted flow then passes the one way valve (732) and out to the ram via (A1) and the front end attachment is raised slowly. The rest of the oil flows back to the tank via the pressure relief valve (703).

Operation of the front end attachment
Fast raise

When the function “fast raise” is selected, then the solenoid (Y85) and the returns valve (Y77) are both switched with 12 V.

The spool (H) is then pressed to its limits and the oil can flow via both ring channels. The full volume of oil then flows via the one way valve (732) to the port (A1) and the front end attachment is raised quickly.

Pulse width Modulation (PWM)

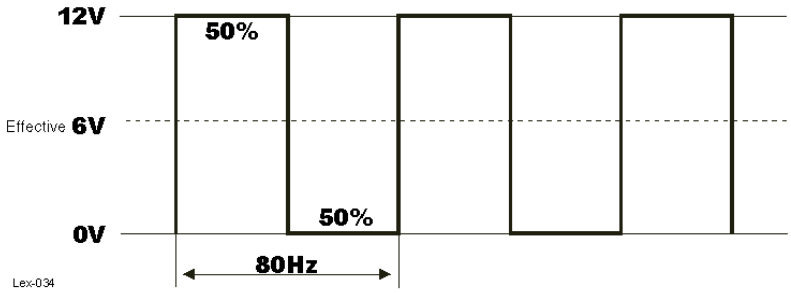

https://truckmanualshub.com/

Operation of the front end attachment
Slow lower

When the function “slow lower” has been selected, then the solenoid (Y87) is switched with a pulse signal of 80Hz and approx. 37% PWM (Pulse width modulation) using the CAC module.

The switching signal is sufficient to push the ball off the seat of the valve (V), but is not enough to close the seat of the valve tightly. The spool (E) is not then in a position to close the ring channel for the return oil. The weight of the front end attachment forces oil over the port (A1) and the ball seat via the pin seat into the return line back to tank. The reduced flow rate via the spool means that the front end attachment lowers at a slower rate.

Operation of the front end attachment
Fast lower

With the function “fast lower”, the solenoid (Y87) is operated with the full 12 V DC.

The ball is unseated from the control valve (V) and the pin seat closed so that the weight of the front end attachment forces the oil onto the surface area of (K). Due to the difference in surface areas, the return valve (S) is then forced open. The oil then passes through return valve (S), the control spool (R) and then back to tank.
The drop rate of the front end attachment, is then dependent on the flow control valve (614).

https://truckmanualshub.com/

Flow control valve

With the function “front end attachment fast drop”, the restricted oil flows through the restrictor in the flow control valve (19), back to tank.
The pressure of the returning oil presses against the spool of the flow control valve, which moves back against the spring pressure opening up the ring channel allowing the oil to flow back to tank. Should the pressure drop from the connection (A), then the flow control opens and allows more flow through the restrictor.
The regulating function of the valve is dependent on the pressure from the connector (A) and the force of the spring within the valve.

The flow rate can be adjusted from outside, by use of a hand wheel.
By releasing the tension on the spring, reduces the amount of pressure required to operate the valve and therefore reduces the amount of oil allowed to flow through.

Note

The difference with the main valve (spare part no. 631 581.0) can be seen here in the pilot block of the function "Front attachment lower". In this version (spare part no. 631 581.0) the valve (E) works independently from the load pressure of the front attachment. This is done for safety's sake on heavy front attachments or when only two rams are fitted.

Depending on this version, a corresponding CAC module must be used.

https://truckmanualshub.com/

3.6 Swinging the unloading auger

Solenoid valve (4/3 way) with lock valve

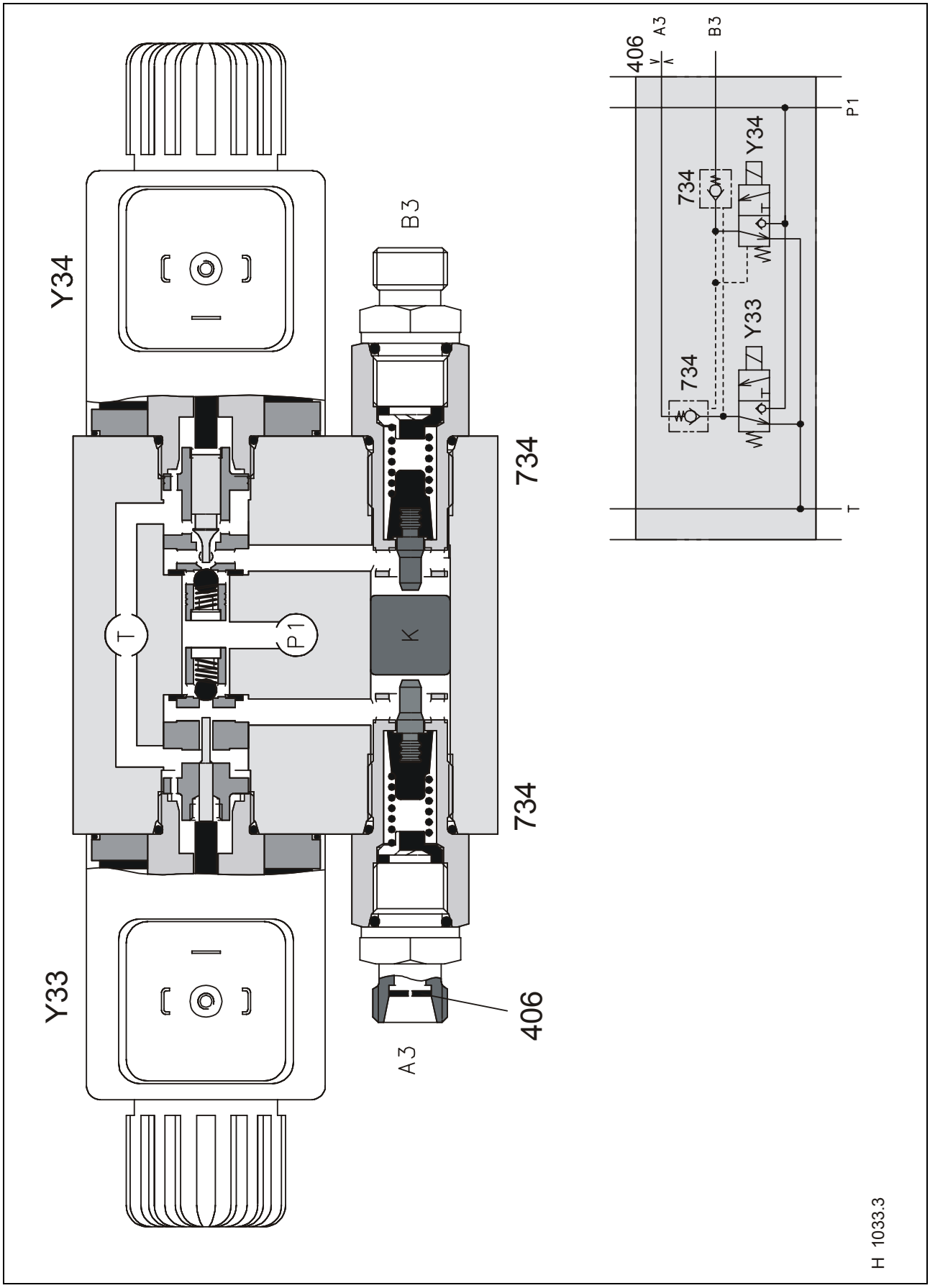

https://truckmanualshub.com/

Key to diagram

406	- Orifice plate . . . . . Ø 0.8 mm
734	- One-way valve (lock-up valve unit)
Y33	- Solenoid valve for swinging out the unloading auger
Y34	- Solenoid valve for swinging in the unloading auger
T	- Connection to tank
P1	- Pump connection via returns valve
A3	- Hydraulic ram for swinging out the grain tank unloading auger
B3	- Hydraulic ram for swinging in the grain tank unloading auger
K	- Plunger

Neutral function

Both sides of the ram are tightly locked by the lock valve (734) at the ports A and B.

Function

The relative solenoid valve (Y33/Y34) is operated depending on whether the unloading auger is being swung in or out. As well as one of these, the returns valve is also operated.
The relative solenoid operates the plunger in the spool, which pushes the ball off its seat, and closes the flow to tank. The pressure then builds against the plunger (K) which in turn opens the lock valve (734) for connector A or B.
The return flow from the ram flows back via the valve insert on the non operated solenoid valve (Y33/Y34) and back to tank. The pressure now builds up and opens the second lock valve (734). Oil now flows out through the lock valve and to the ram.

Pressure control

Because of the nature of the unloading auger, when it is being swung in, it is necessary to limit the pressure **to approx. 120 bar**.
Because of the requirement of the valve inserts and the relatively large size of pin, it is not enough to rely on the electromagnetic force of the solenoid to maintain system pressure. For this reason the pin sea in the valve unit will release oil to tank from 120 bar.

Note: All 1999 machines have this facility fitted as standard. Should older machines be in need of this requirement, then a new valve insert can be fitted.

https://truckmanualshub.com/

Swinging the unloading auger

Hydraulic ram with end damping (spare part no. 668 771.5)

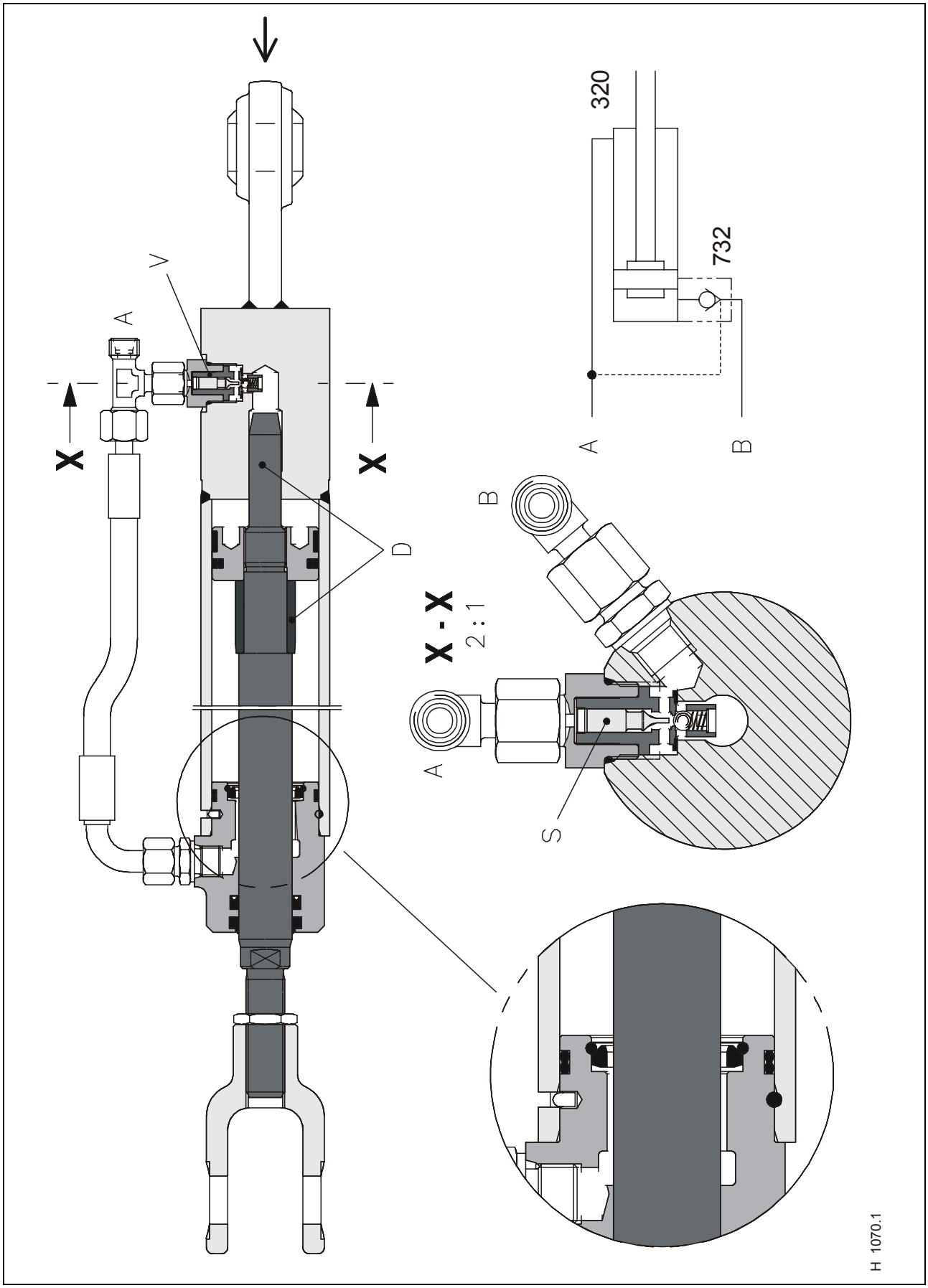

https://truckmanualshub.com/

Key to diagram

320 - Hydraulic ram for swinging the unloading auger . . . . . Ø 50/25 mm
732 - Unloading auger safety valve

A - Solenoid valve for swinging out the unloading auger
B - Solenoid valve for swinging in the unloading auger
D - End damping
S - Spool
V - Ball seat valve
X - Close up view

Function of the safety valve

Firstly due to the pressure build up against the ram face, the ball valve (V) is opened by the spool (S). The return flow is only permissible when the function “swing out” is operated.
The safety valve stops the unloading auger from swinging out on its own.

Function of the end damping

When the ram reaches the end of its stroke, the oil flow is reduced so that the auger is slowed down. When the ram is travelling in, it is slowed by means of the pin, and when travelling out by means of the larger surface area.

https://truckmanualshub.com/

Swinging the grain tank unloading tube

Hydraulic ram with end damping (spare part no. 668 771.2)

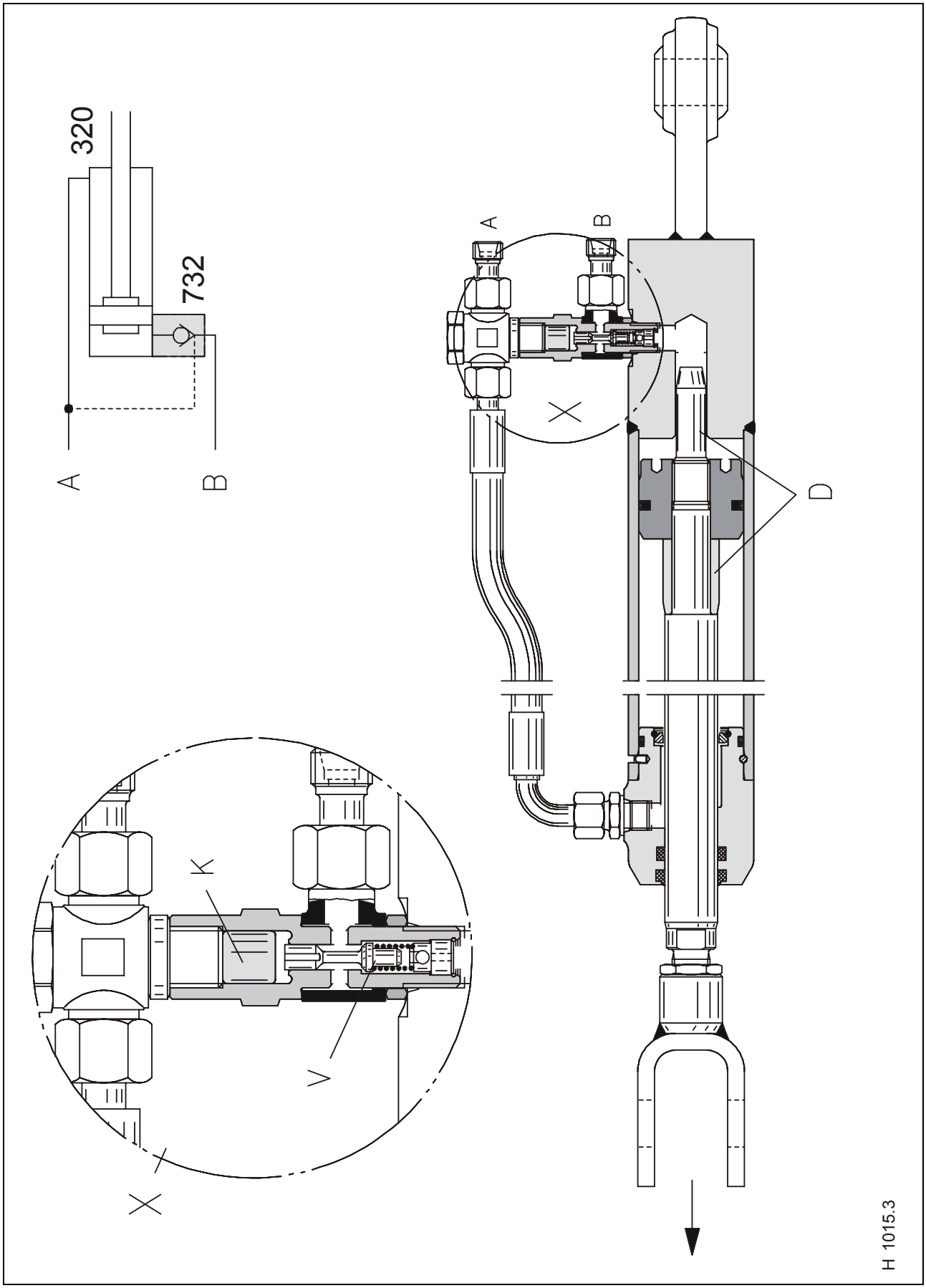

https://truckmanualshub.com/

Key to diagram

320 - Hydraulic ram for swinging the unloading auger . . . . . Ø 50/25 mm
732 - Unloading auger safety valve

A - Solenoid valve for swinging out the unloading auger
B - Solenoid valve for swinging in the unloading auger
D - End damping
K - Plunger
V - Pin seat valve
X - Close up view

Function of the safety valve

Firstly due to the pressure build up against the ram face, the pin seat valve (V) is opened by the plunger (K). The return flow is only permissible when the function “swing out” is operated.
The safety valve stops the unloading auger from swinging out on its own.

Function of the end damping

When the ram reaches the end of its stroke, the oil flow is reduced so that the auger is slowed down. When the ram is travelling in, it is slowed by means of the pin, and when travelling out by means of the larger surface area.

Note: The pin seat valve in hydraulic ram (spare part no. 668 771.5) cannot be used on hydraulic ram (spare part no. 668 771.2).

https://truckmanualshub.com/

3.7 Threshing concave adjustment

Solenoid valve (4/3 way) with lock valve

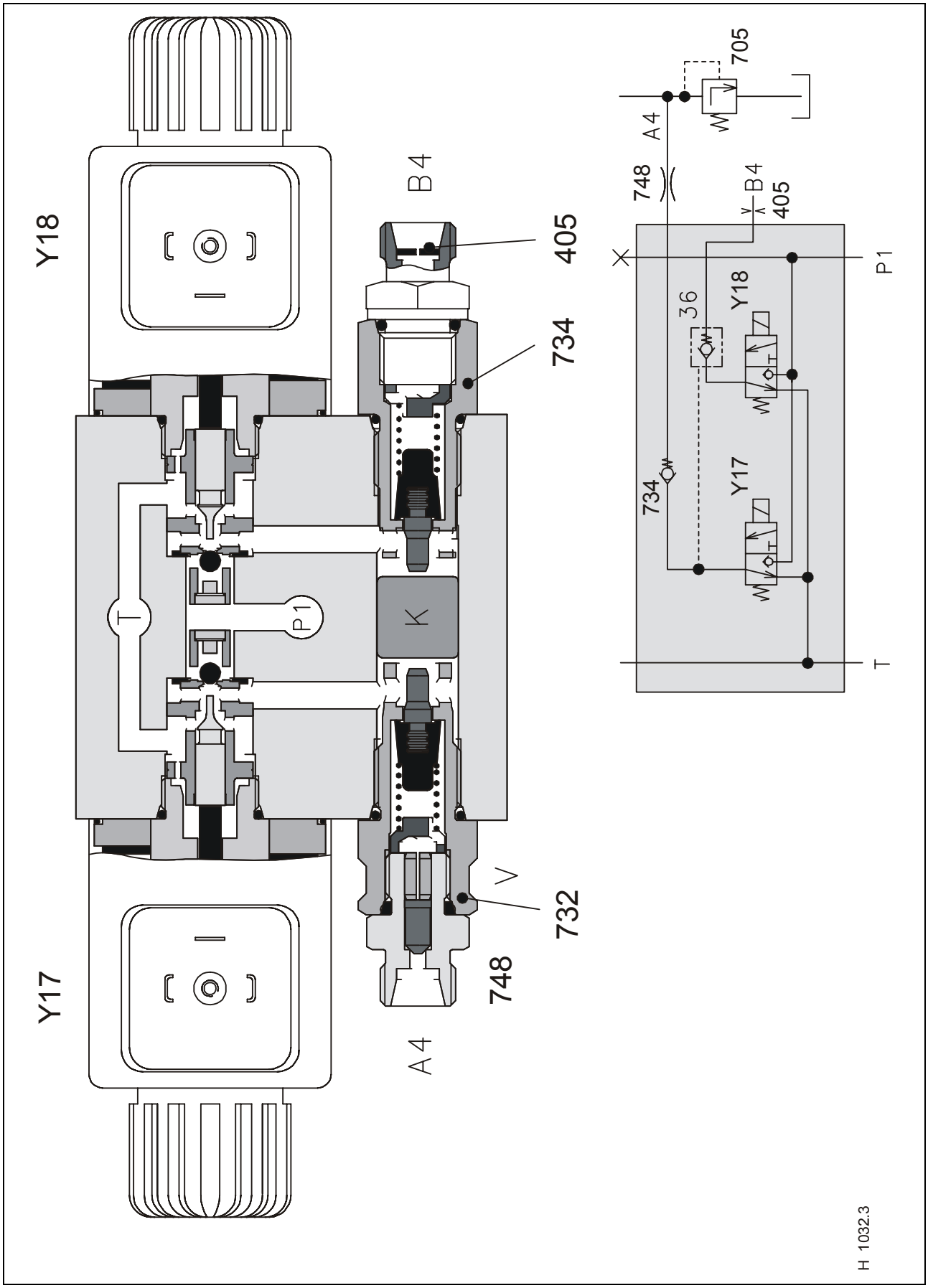

https://truckmanualshub.com/

Key to diagram
Neutral function

405	- Orifice plate	Ø 0.6 mm
705	- Pressure relief valve	90 ± 5 bar
732	- One-way valve (not pilot controlled)	
734	- One-way valve (lock-up valve unit)	
748	- Restrictor	
Y17	- Solenoid valve for narrowing the threshing concave (close)	
Y18	- Solenoid valve for widening the threshing concave (open)	
T	- Connection to tank	
P1	- Pump connection via the returns valve	
A4	- Hydraulic ram for closing the threshing concave (LHS)	
B4	- Hydraulic ram for opening the threshing concave (RHS)	
V	- Valve insert	
K	- Plunger	

Both sides of the hydraulic ram are shut off tightly by the one-way valves (732, 734) in the consumer ports A and B.

Threshing concave narrow function (close)

The solenoid valve (Y17) and the returns valve are switched. The relative solenoid opens the valve, which in turn closes the flow back to tank. The pressure then builds up which forces the plunger (K) to open the lock valve (734) at port (B). The return of the oil from the ram then flows via the solenoid (Y18) back to tank. The pressure then opens the lock valve (732) and opens the connection to (A) and the rams then travel out.

Threshing concave wide function (open)

The solenoid valve (Y18) and the returns valve are switched. The relative solenoid opens the valve, which in turn closes the flow back to tank. The pressure then builds up which forces the plunger (K) but does not open the lock valve (732) at port A.
The return oil from the hydraulic ram is locked by the lock valve (732). The pressure then opens the other lock valve (734) at port B which allows oil to flow out to the ram. The return oil then flows back to tank via the pressure relief valve (705).

The system is so designed to enable it to go onto an exact position and would not open on its own accord.

Note: Narrowest gap of the concave cannot in practice be achieved by the rams. The reason is that at the ram face is situated a valve that will then open allowing oil to flow through. The purpose of this is to ensure that both rams can be equalised. In practice the rams can be closed, but must be opened slightly thus closing the bottom valves.

https://truckmanualshub.com/

Threshing concave adjustment
Hydraulic rams with bleeding valves

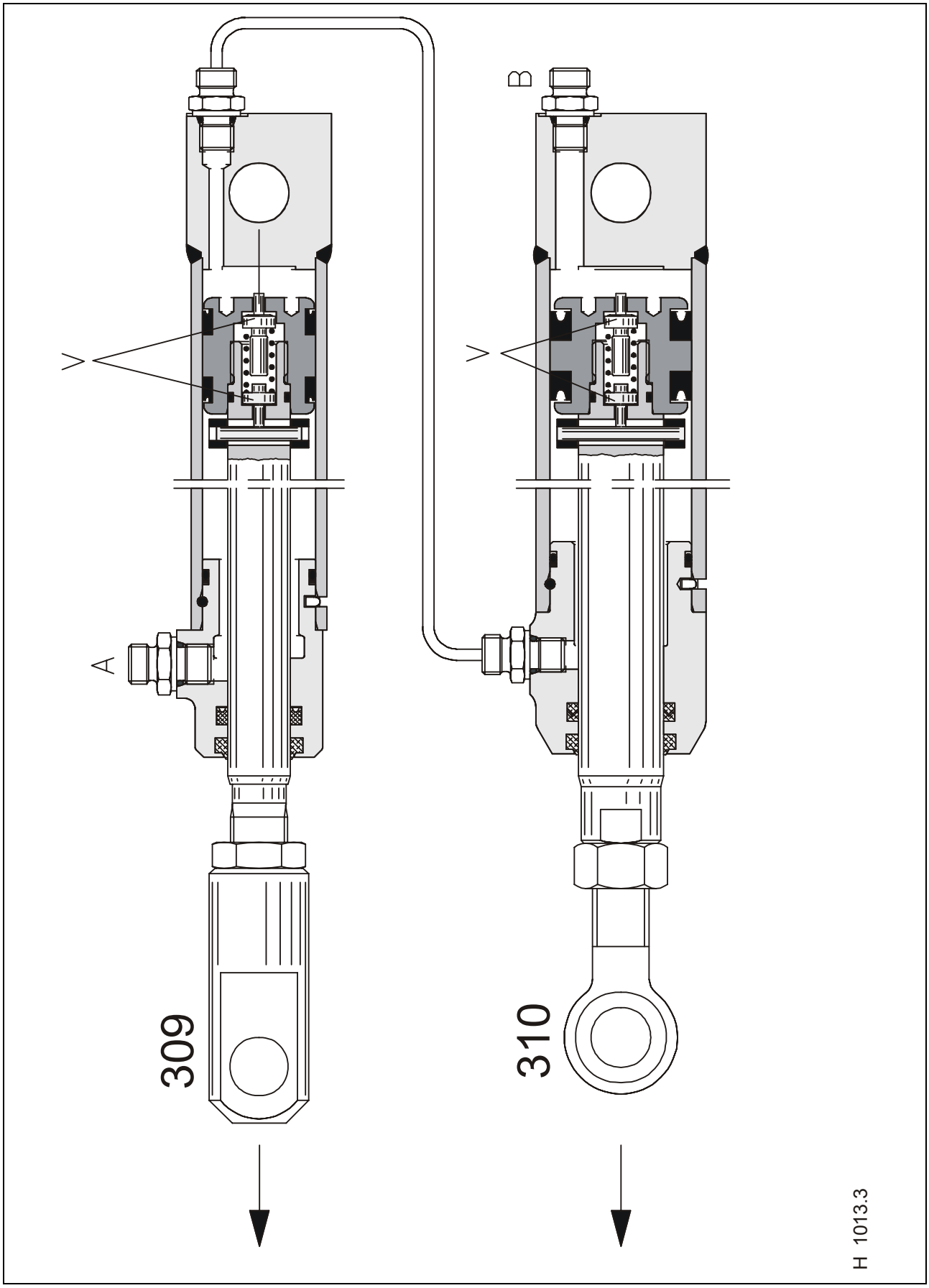

https://truckmanualshub.com/

Key to diagram

309 - Concave left-hand hydraulic ram . . . . . Ø 40/22 mm
310 - Concave right-hand hydraulic ram . . . . . Ø 50/30 mm

A - Solenoid valve port for closing the threshing concave (close)
B - Solenoid valve port for opening the threshing concave (open)
V - Bottom valves

Simultaneous function

The two hydraulic rams are configured so that the surface area of the left hand ram (309) and that of the right hand ram (310) match. The system is designed so that regardless of load, the two rams travel in and out evenly.

Bottom valves

The bottom valves (V) open whenever the rams reach their end stops, thus allowing air between the two rams to be bled.
After a repair, the rams should be held in the end position for about 15 sec, thus allowing air to be exhausted.

Note: The two hydraulic rams will after every 24 hours be switched to bleed the system every time the threshing has been switched on. Once the system has been bled the rams then travel back to the setting they were on before the bleeding process.

https://truckmanualshub.com/

Threshing concave adjustment
Pressure relief valve

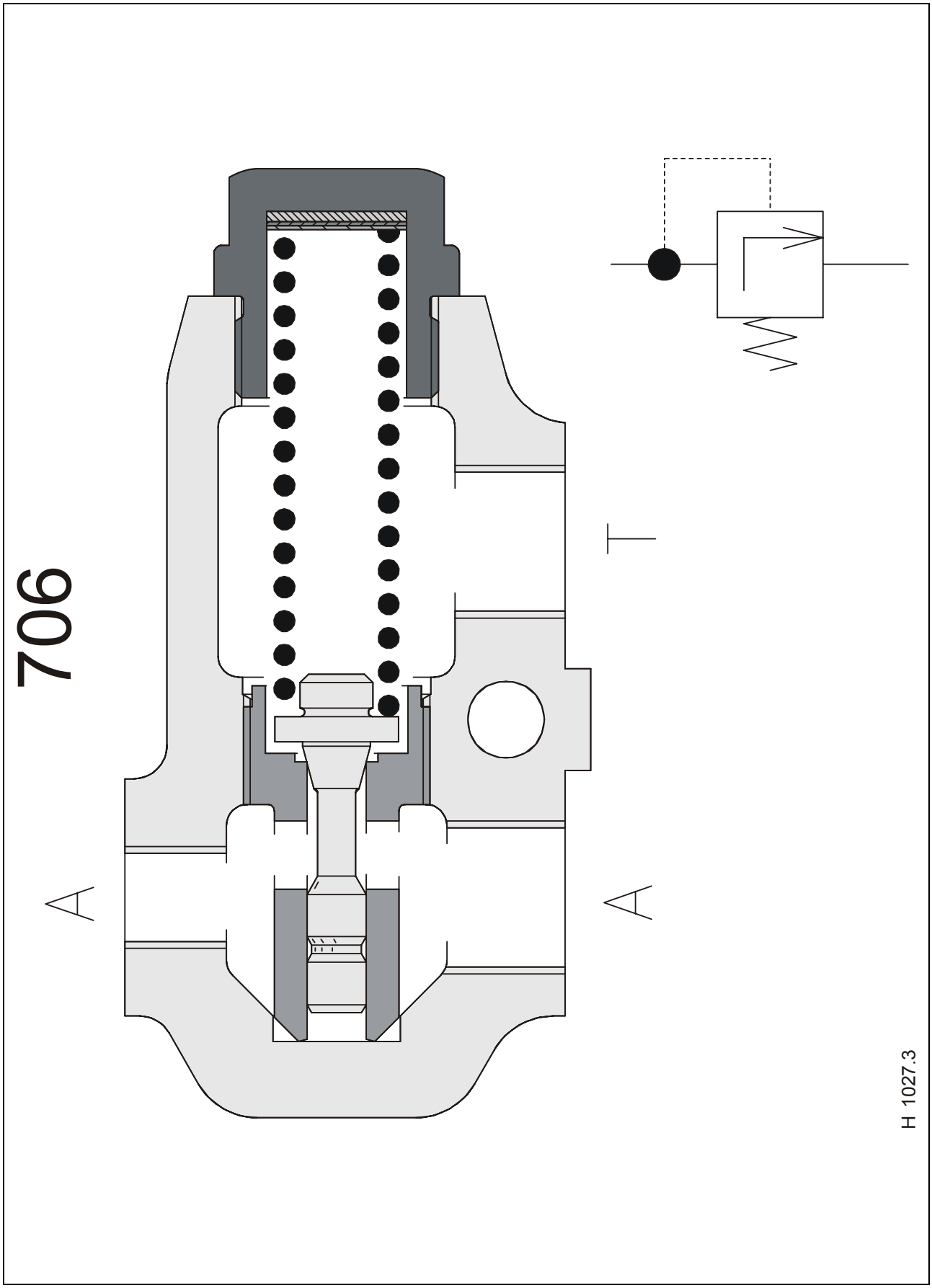

https://truckmanualshub.com/

Key to diagram

706 - Pressure relief valve . . . . . 90 ± 5 bar

T - Tank port
A - Concave left adjustment hydraulic ram port

Pressure setting

The spring in the pressure relief valve (706) is adjusted to **90 ± 5 bar**. The setting of the valve can be corrected by adding or removing shims.

The 0.5 mm shim will adjust it by about 7 bar and the 1.2 mm shim will adjust it by about 17 bar

Note: These values are given to produce an average system pressure of 180 bar. After any adjustment or change, the system pressure must be checked.

Overload function

The complete load of the concaves act on the hydraulic rams, and stand on the pressure relief valve (706). When an overload of **about 2.5 t** acts on the concave, the pressure relief valve adjusted to **90 ± 5 bar** opens and dumps system pressure to tank.
The threshing concave opens on its own until the load has passed, then is adjusted electronically back to the position it was at before the overload.

https://truckmanualshub.com/

3.8 Threshing drum speed regulation

Solenoid valve (3/3 way) with one-way restrictor valve

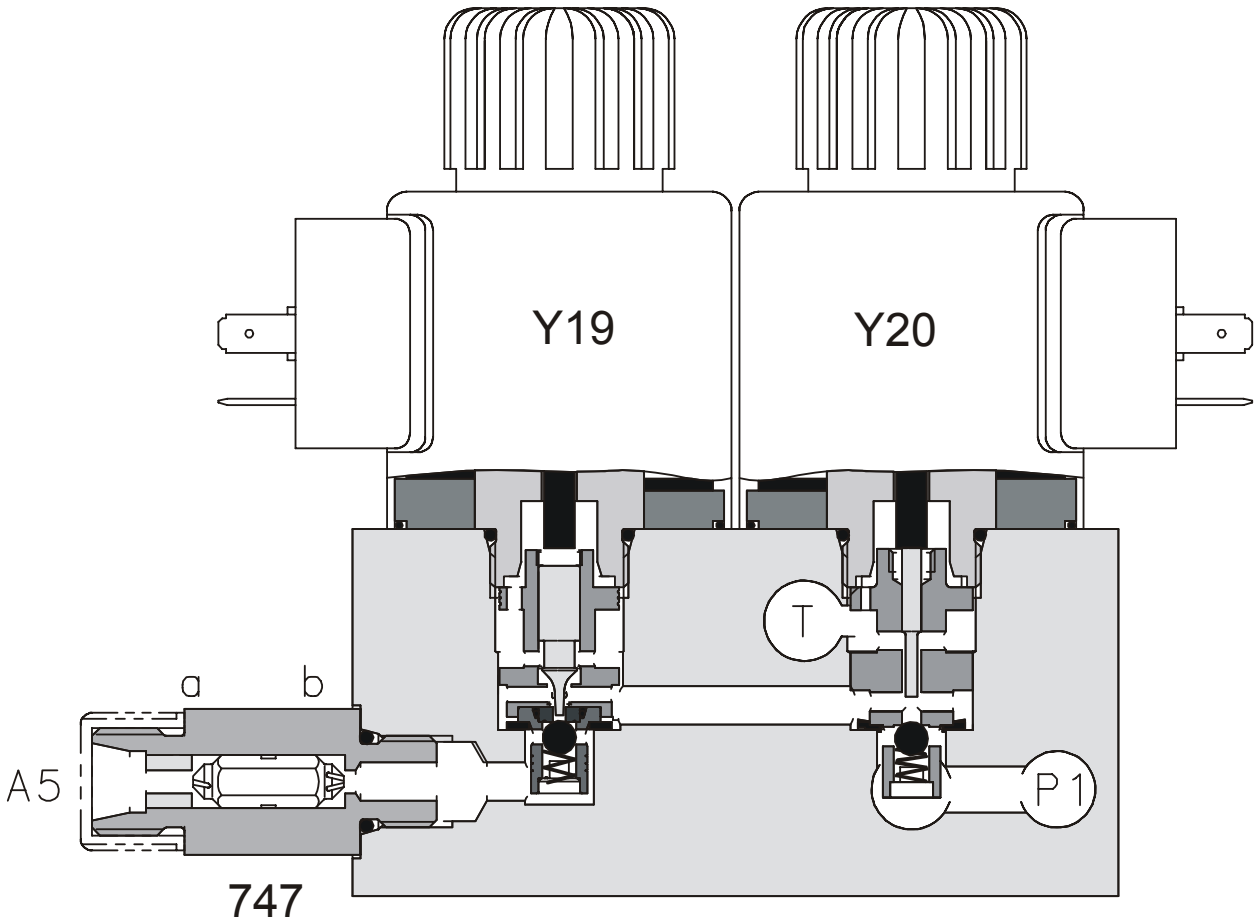

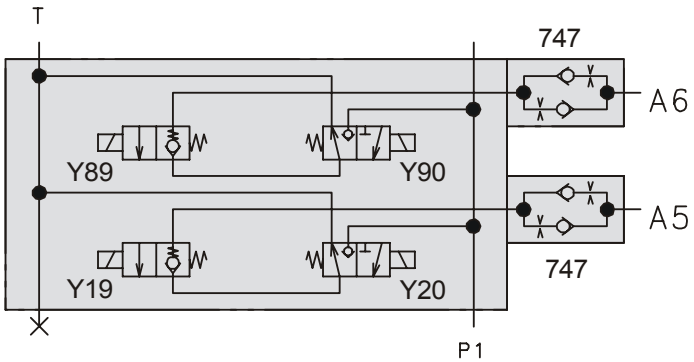

H 1005.3

https://truckmanualshub.com/

Key to diagram

747 - Double restrictor valve . . . . . Ø 0,3 mm

Y19 - Solenoid valve for slowing down the threshing drum speed
Y20 - Solenoid valve for speeding up the threshing drum speed

T - Connection to tank
P1 - Pump connection via the returns valve
A5 - Speed adjustment hydraulic ram port
a - One-way restrictor valve – 1 notch
b - One-way restrictor valve – 2 notches

Function – neutral

The oil in the hydraulic ram is locked at port A, by the ball in the valve insert.

Function – speeding up the drum speed

The solenoid valve (Y20) and the returns valve are switched. The relative spool is then operated and pushes the ball off its seat. At the same time, the return flow to tank is blocked off. The pressure then builds up and pushes the ball of the other solenoid valve (Y19) off its seat. The oil then flows via the restrictor (747) and out through the port A.

Function – slowing down the drum speed

The solenoid valve (Y19) is switched without the returns valve. The respective spool is then operated and pushes the ball off its seat. At the same time, the return flow to tank is released via the two notches of the restrictor valve (747) and the valve insert of the non switched solenoid valve (Y20).

Note: So that speeding up and slowing down the drum speed are the same, the oil coming from the system when the variator is opening with the aid of the springs goes through the restrictor (b) with the two notches.

Note: The solenoid for the “slow” function is fitted with a return spring and is marked with an “F” on the face side.

https://truckmanualshub.com/

Threshing drum speed regulator
Hydraulic ram with rotary coupling

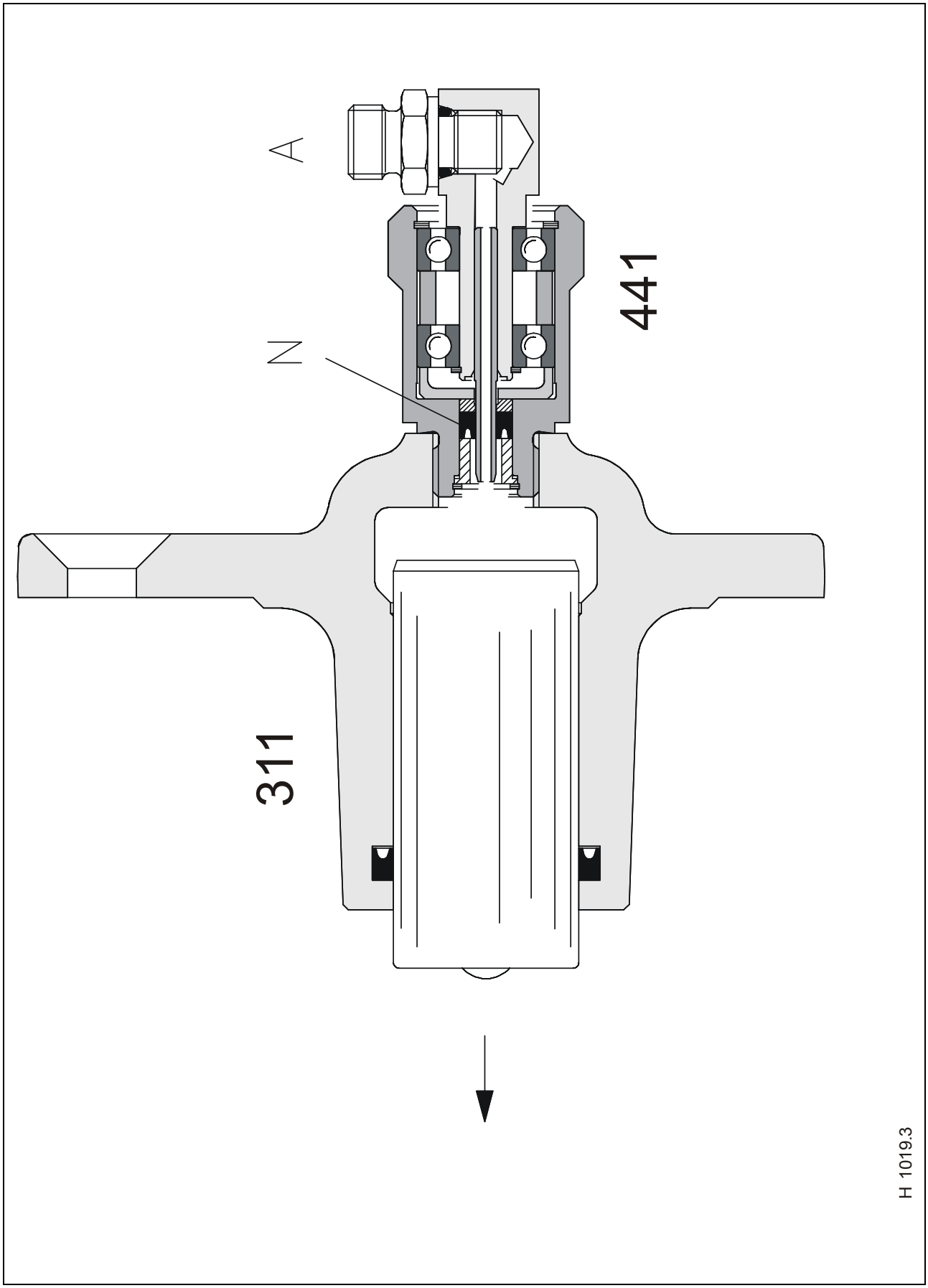

https://truckmanualshub.com/

Key to diagram

311	- Hydraulic ram for threshing drum speed . . . . . Ø 35 mm
441	- Rotary coupling
A	- Speed adjustment solenoid valve port
N	- Seal

https://truckmanualshub.com/

3.9 Front end attachment reverser

Solenoid valve (3/2 way)

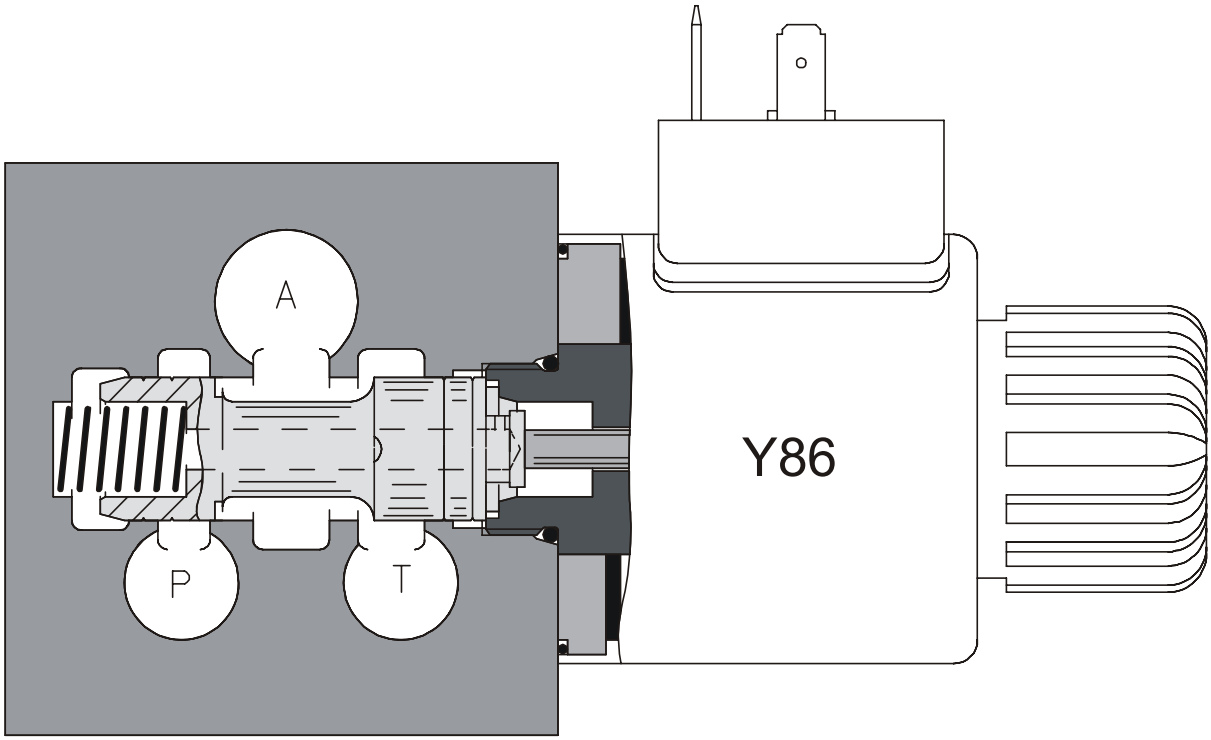

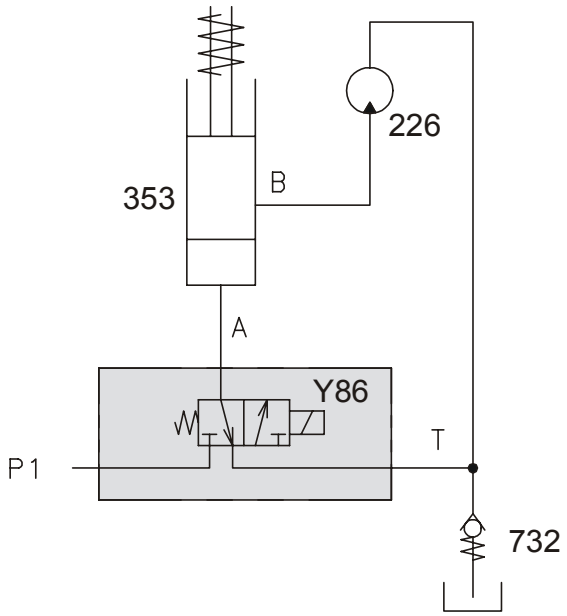

H 1008.4

https://truckmanualshub.com/

Key to diagram

226	- Hydraulic motor for reversing the front attachment	OMR 200
353	- Hydraulic ram for reversing the front attachment	Ø 22 mm
732	- One-way valve	
Y86	- Solenoid valve for reversing the front attachment	
T	- Connection to tank	
P1	- Pump connection via the returns valve	
A8	- Front attachment reverse hydraulic ram port	

Function – neutral

The spring pressure forces the oil out of the reversing ram (353) over the connection A-T in the solenoid (Y86) and back to tank. The connector P1 is blocked by the spool.

Function – reversing

The solenoid valve (Y86) and the returns valve are operated. The flow to tank is closed by the spool and the solenoid valve (Y86) and the connection between P1 and port A is opened.
The reversing ram (353) pushes the hydraulic motor (226) down onto the sprocket. Just before the reversing ram (353) reaches its end stop, full oil flow is supplied to the motor (226). The purpose for this is to ensure that the teeth are in mesh.

The one way valve (732) stops the motor (226) from turning, should a hydraulic spike appear in the system.

https://truckmanualshub.com/

Reversing the front attachment
Hydraulic ram

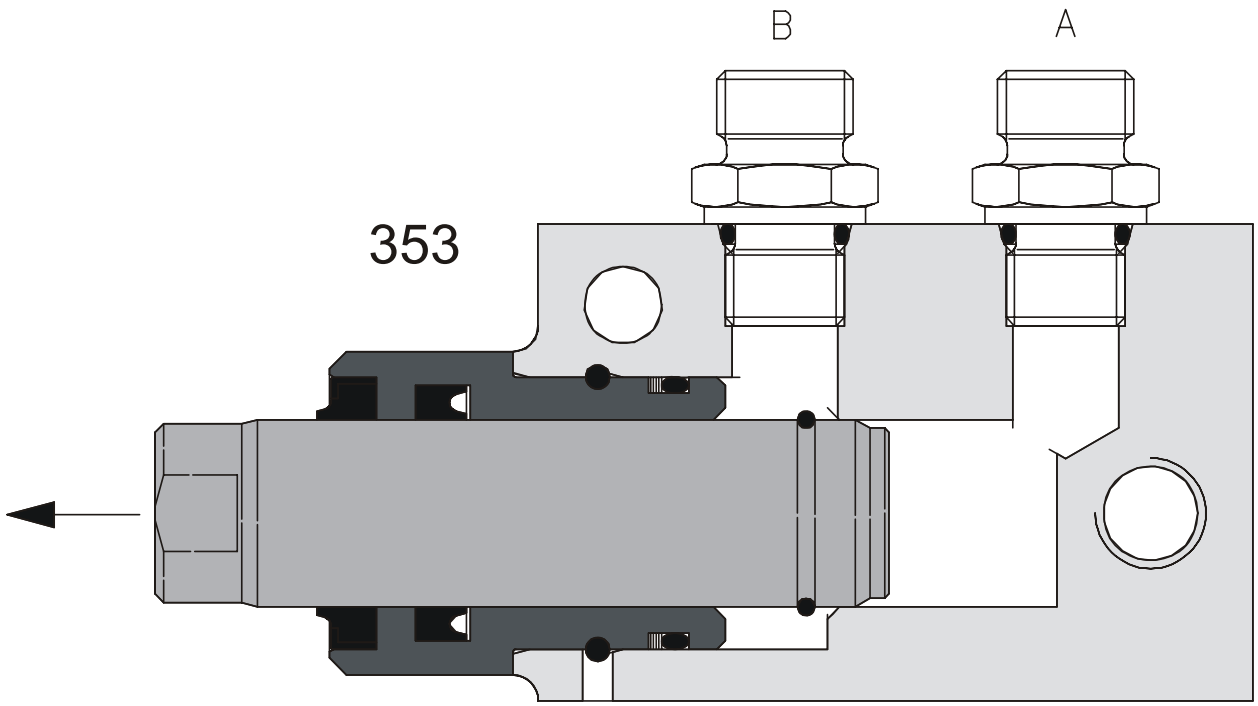

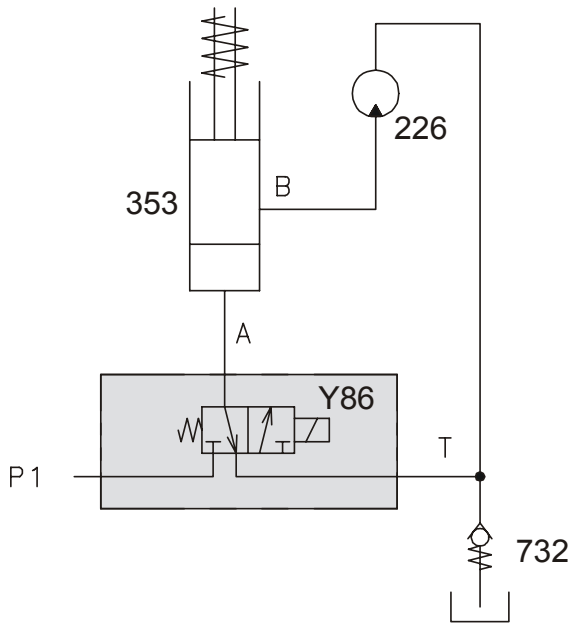

H 1025.4

https://truckmanualshub.com/

Key to diagram

226 - Hydraulic motor for reversing the front attachment . . . . . OMR 200
353 - Hydraulic ram for reversing the front attachment . . . . . Ø 22 mm
732 - One-way valve

Y86 - Solenoid valve for reversing the front attachment

A - Solenoid valve port for reversing the front attachment
B - Connection to the hydraulic motor

Function

When the solenoid valve (Y86) is switched, the reversing ram (353) is driven out and pushes the hydraulic motor (226) onto the sprocket. Just before it reaches its end stop, the oil flow is switched from the ram (353) to the hydraulic motor (226). This is done to ensure that the motor is correctly meshed.

The one-way valve (732) stops the motor from turning, should a hydraulic spike appear in the system.

Adjustment

With the use of an eccentric bush, the adjustment of the reversing ram (353) can be adjusted to the drive shaft of the intake housing.

The adjusting bolt in the ram should be so adjusted that the hydraulic motor (226) has maximum engagement, with approx. 0.2 mm axle play on the drive sprocket.
The screw should be adjusted so that it has **0.5 mm** gap to the end stop, when the reverser is engaged, and should be locked in this position.

The complete movement of the reversing ram (353) is 12 mm, whereby after 11 mm oil is fed through to the hydraulic motor.

Components of the reversing motor OMP 200

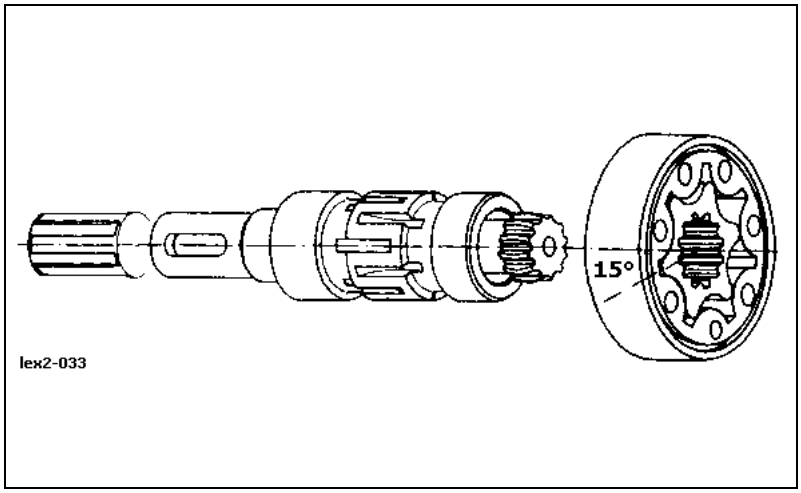

https://truckmanualshub.com/

3.10 Front end attachment quick release coupling

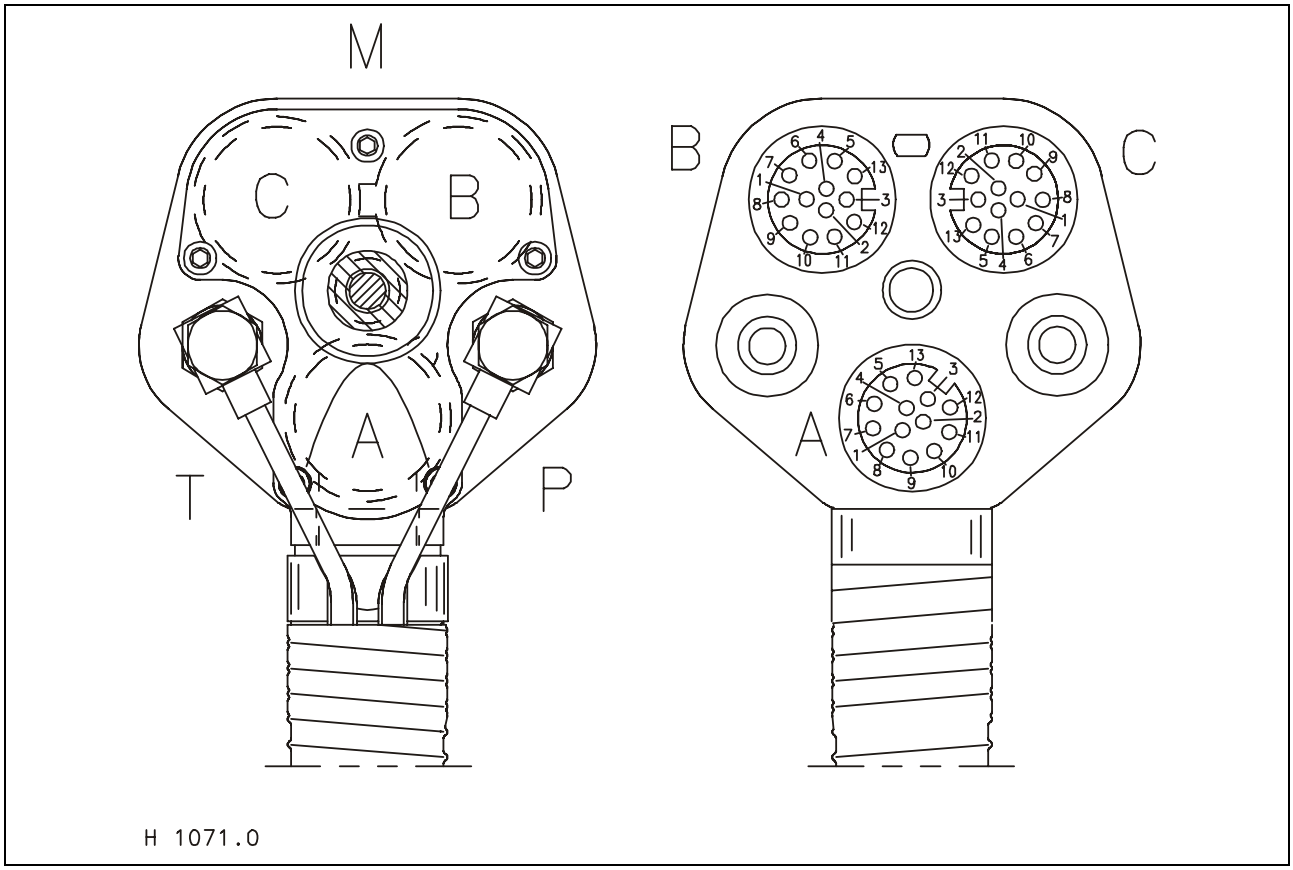

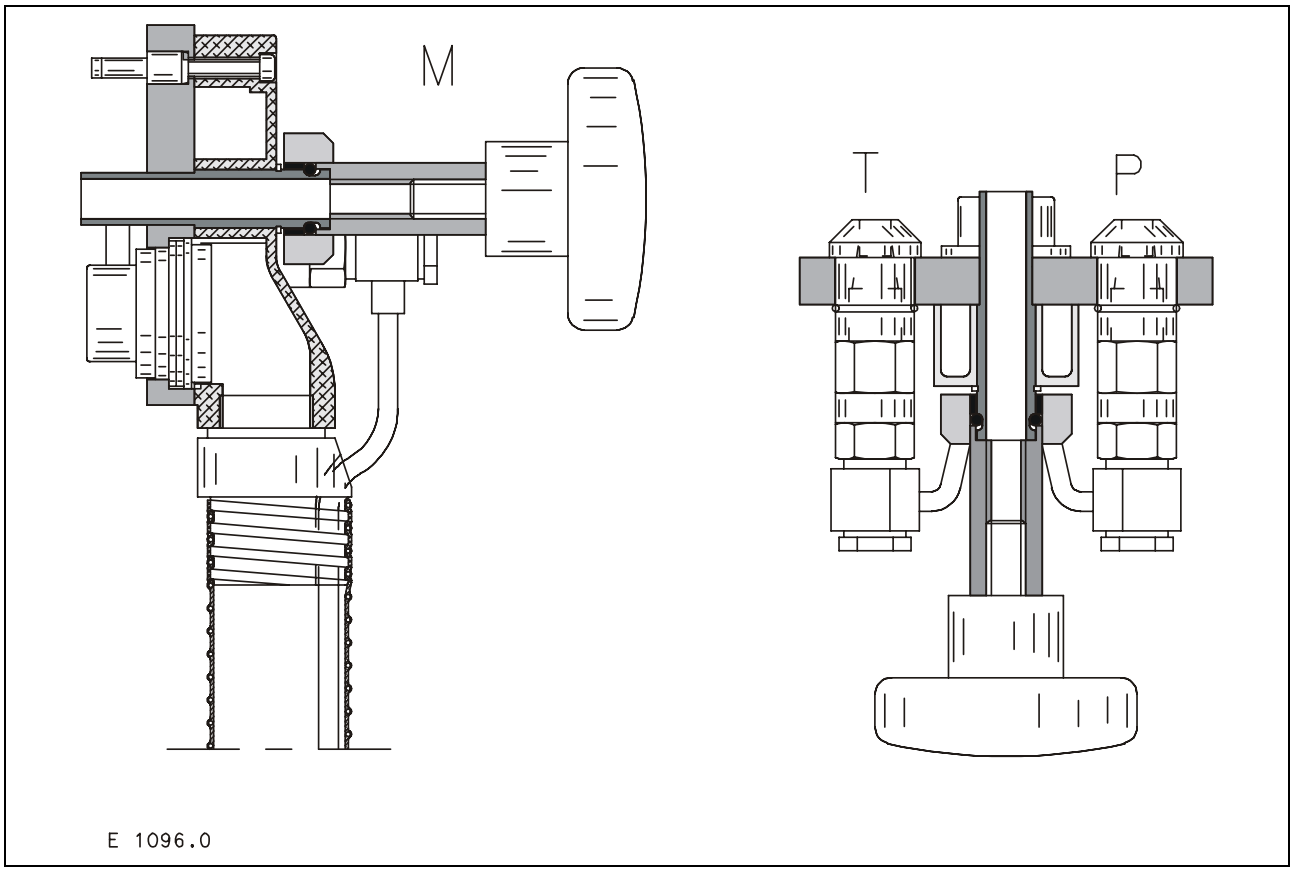

https://truckmanualshub.com/

Contents

Working hydraulics –

Additional machine functions

4.1 Circuit diagram – straw walker machines 4-2

4.2 Circuit diagram – Rotor machines 4-6

4.3 Circuit diagram for the straw and chaff spreading 4-10

4.4 Hydraulic reel drive 4-12

4.5 Layout of the components 4-14

4.6 AUTO CONTOUR cutterbar cross levelling 4-20
Solenoid valve 4-20
Function 4-21
Hydraulic ram 4-22
Hydraulic ram, bleeding and adjusting 4-23

4.7 Uni-spreader and straw chopper adjustment 4-24
Solenoid valve 4-24
Function 4-25

4.8 Intake housing and front end attachment speed regulation 4-26
Solenoid valve 4-26
Function 4-27
Hydraulic ram 4-28

4.9 Cutterbar spring adjustment 4-30
Solenoid valve 4-30
Function 4-31

4.10 Uni-spreader drive 4-32
Solenoid valve **(from machine no.)** 4-32
Function 4-33
Solenoid valve **(to machine no.)** 4-34
Function 4-35
Hydraulic ram 4-36

4.11 Straw or chaff spreader drive 4-38
Flow control valve 4-38
Function 4-39

4.12 Grain tank unloading aid 4-40
Solenoid valve 4-40
Function 4-41

4.13 Front attachment dampening 4-42
Solenoid valve 4-42
Function 4-43

4.14 Reel speed control (hydraulic) 4-44
Solenoid valve 4-44
Function 4-45

4.15 Track tension 4-46
Distributor with valve block 4-46
Filling instructions 4-47
Safety function 4-47

https://truckmanualshub.com/

4.1 Circuit diagram – straw walker machines

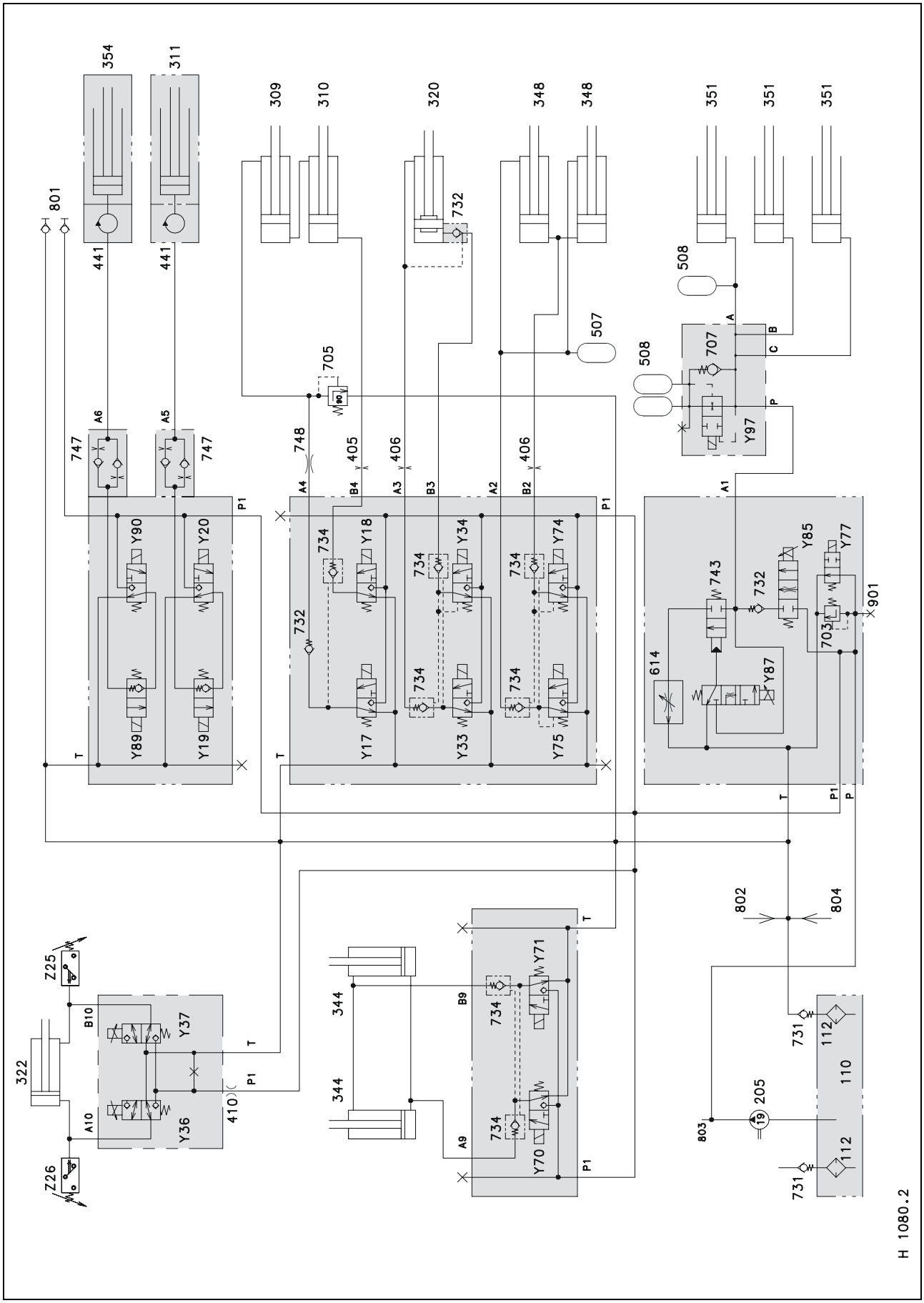

https://truckmanualshub.com/

Key to diagram I

110	- Oil tank	
112	- Sieve filter	
205	- Gear pump for working hydraulics	14 cm³
309	- Hydraulic ram, concave left-hand	Ø 40/22 mm
310	- Hydraulic ram, concave right-hand	Ø 50/30 mm
311	- Hydraulic ram, threshing drum variable-speed drive	Ø 35 mm
320	- Hydraulic ram, swinging the grain tank unloading tube	Ø 50/25 mm
322	- Hydraulic ram, grain tank unloading aid	Ø 40 mm
344	- Hydraulic ram, spring lock	Ø 55 mm
348	- Hydraulic ram, straw chopper position	Ø 40/22 mm
351	- Hydraulic ram, front attachment raise/lower	Ø 55 mm
354	- Hydraulic ram, front attachment variable-speed drive	Ø 35 mm
405	- Orifice plate	Ø 0.6 mm
406	- Orifice plate	Ø 0.8 mm
410	- Orifice plate	Ø 1.5 mm
441	- Rotary coupling	
507	- Straw chopper position accumulator	0.075 l / 60 bar
508	- Front attachment damper accumulator	0.6 l
614	- Flow control valve	5 – 50 l/min.
703	- Pressure relief valve	175^{+15} bar
706	- Pressure relief valve	90±5 bar
731	- One-way valve of return line	0.1 bar
734	- One-way valve (lock-up valve unit)	
743	- Return valve, lower front attachment (lower quickly)	
747	- Double one-way restrictor valve	Ø 0.3 mm
748	- Restrictor	
801	- Quick release coupling (P/T) for front attachments	
802	- Return line of Uni-spreader solenoid valve	
803	- Autopilot feed	
804	- Autopilot return	
901	- Working hydraulics test port	

https://truckmanualshub.com/

Circuit diagram – straw walker machines

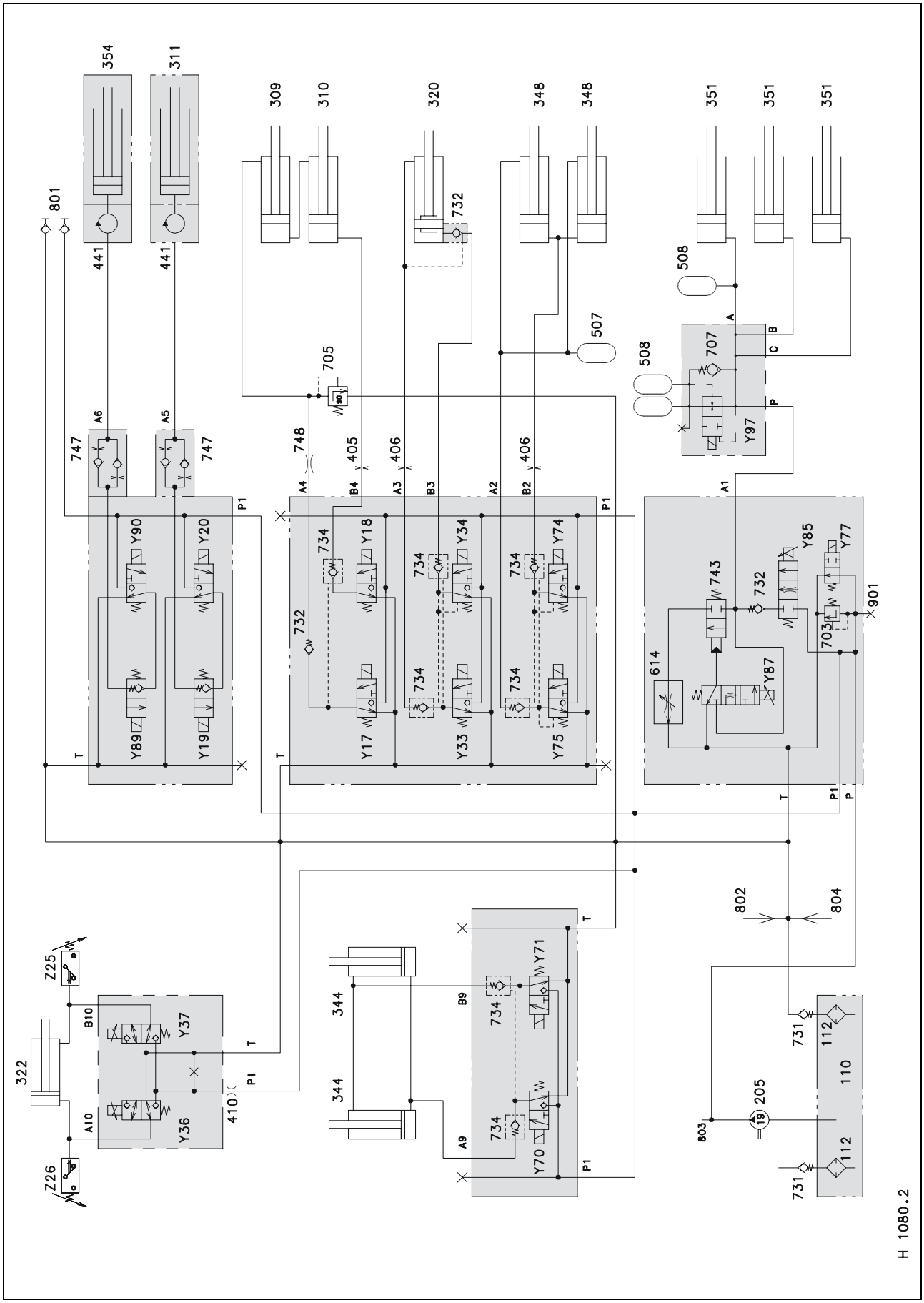

https://truckmanualshub.com/

Key to diagram II

P	- To returns valve
P1	- Parallel connection to valves from the returns valve
T	- Tank port (return)
Y17	- Solenoid valve for narrowing the threshing concave (close)
Y18	- Solenoid valve for widening the threshing concave (open)
Y19	- Solenoid valve for slowing down the threshing drum speed
Y20	- Solenoid valve for speeding up the threshing drum speed
Y33	- Solenoid valve for swinging out the unloading auger
Y34	- Solenoid valve for swinging in the unloading auger
Y36	- Solenoid valve for moving grain tank unloading aid forward
Y37	- Solenoid valve for moving grain tank unloading aid backward
Y70	- Solenoid valve for unlocking cutterbar springs
Y71	- Solenoid valve for locking cutterbar springs
Y74	- Solenoid valve for moving straw chopper in work position
Y75	- Solenoid valve for moving straw chopper in park position
Y77	- Master valve solenoid valve
Y85	- Solenoid valve for raising the front attachment
Y87	- Solenoid valve for lowering the front attachment
Y89	- Solenoid valve for slowing down the front attachment variable-speed drive
Y90	- Solenoid valve for speeding up the front attachment variable-speed drive
Z25	- Oil pressure switch . . . . . 120 bar
Z26	- Oil pressure switch . . . . . 80 bar
A1	- Hydraulic ram for raising / lowering the front end attachment
A2	- Hydraulic ram for moving the straw chopper in park position
B2	- Hydraulic ram for moving the straw chopper in work position
A3	- Hydraulic ram for swinging out the grain tank unloading auger
B3	- Hydraulic ram for swinging in the grain tank unloading auger
A4	- Hydraulic ram for narrowing the threshing concave (close)
B4	- Hydraulic ram for widening the threshing concave (open)
A5	- Hydraulic ram for threshing drum speed
A6	- Hydraulic ram for front end attachment speed
A7	- Hydraulic ram for cutterbar cross levelling RHS
B7	- Hydraulic ram for cutterbar cross levelling LHS
A9	- Hydraulic ram for locking the cutterbar springs
B9	- Hydraulic ram for unlocking the cutterbar springs
A10	- Hydraulic ram for grain tank unloading aid back
B10	- Hydraulic ram for grain tank unloading aid forwards

https://truckmanualshub.com/

4.2 Circuit diagram – Rotor machines

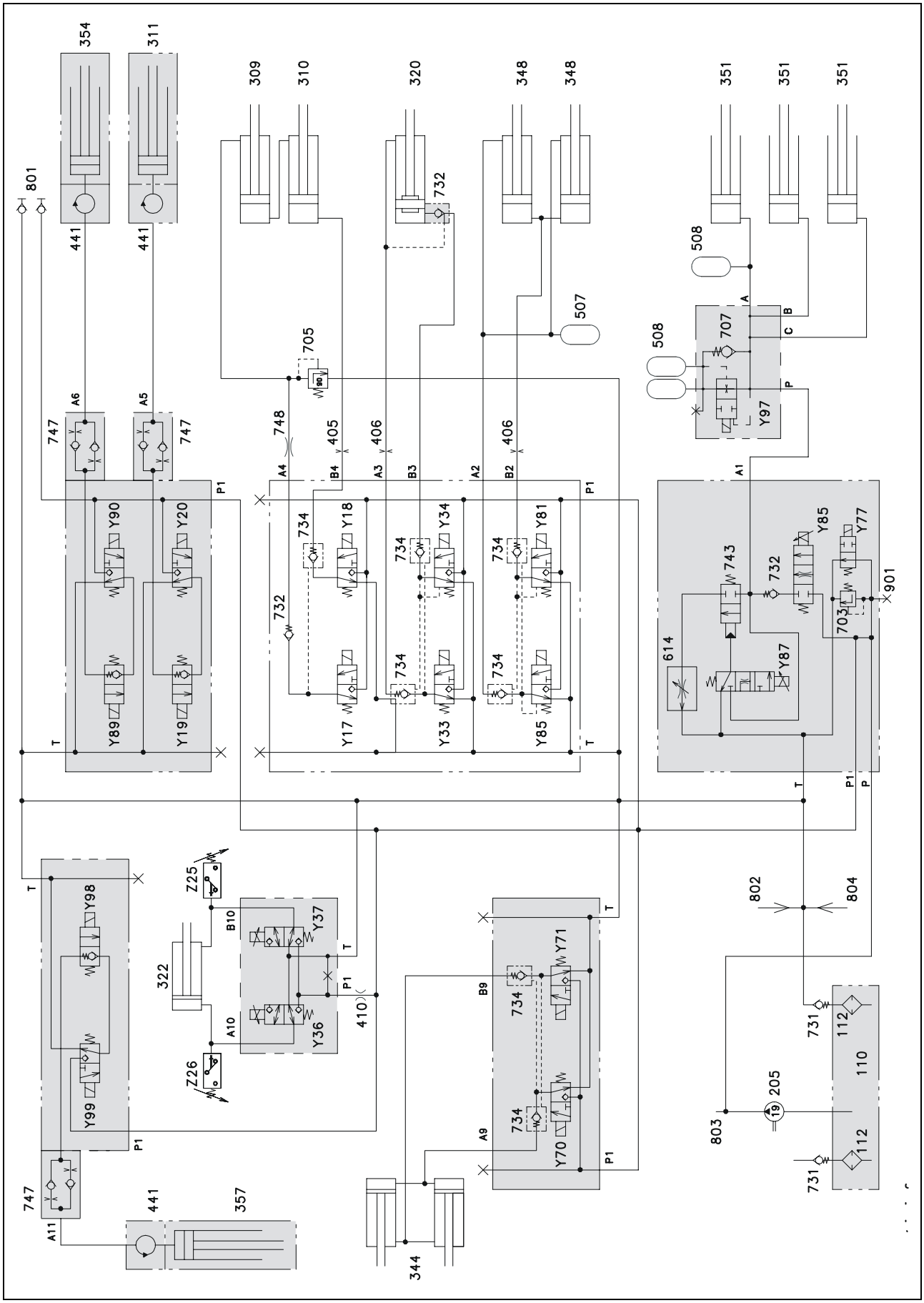

https://truckmanualshub.com/

Key to diagram I

110	- Oil tank	
112	- Sieve filter	
205	- Gear pump for working hydraulics	14 cm³
309	- Hydraulic ram, concave left-hand	Ø 40/22 mm
310	- Hydraulic ram, concave right-hand	Ø 50/30 mm
311	- Hydraulic ram, threshing drum variable-speed drive	Ø 35 mm
320	- Hydraulic ram, swinging the grain tank unloading tube	Ø 50/25 mm
322	- Hydraulic ram, grain tank unloading aid	Ø 40 mm
344	- Hydraulic ram, spring lock	Ø 55 mm
348	- Hydraulic ram, straw chopper position	Ø 40/22 mm
351	- Hydraulic ram, front attachment raise/lower	Ø 55 mm
354	- Hydraulic ram, front attachment variable-speed drive	Ø 35 mm
357	- Hydraulic ram, rotor variator variable-speed drive	Ø 35 mm
405	- Orifice plate	Ø 0.6 mm
406	- Orifice plate	Ø 0.8 mm
410	- Orifice plate	Ø 1.5 mm
441	- Rotary coupling	
507	- Straw chopper position accumulator	0.075 l / 60 bar
508	- Front attachment damper accumulator	0.6 l
614	- Flow control valve	5 – 50 l/min.
703	- Pressure relief valve	175^{+15} bar
706	- Pressure relief valve	90±5 bar
731	- One-way valve of return line	0.1 bar
734	- One-way valve (lock-up valve unit)	
743	- Return valve, lower front attachment (lower quickly)	
747	- Double one-way restrictor valve	Ø 0.3 mm
748	- Restrictor	
801	- Quick release coupling (P/T) for front attachments	
802	- Return line of Uni-spreader solenoid valve	
803	- Autopilot feed	
804	- Autopilot return	
901	- Working hydraulics test port	

https://truckmanualshub.com/

Circuit diagram – Rotor machines

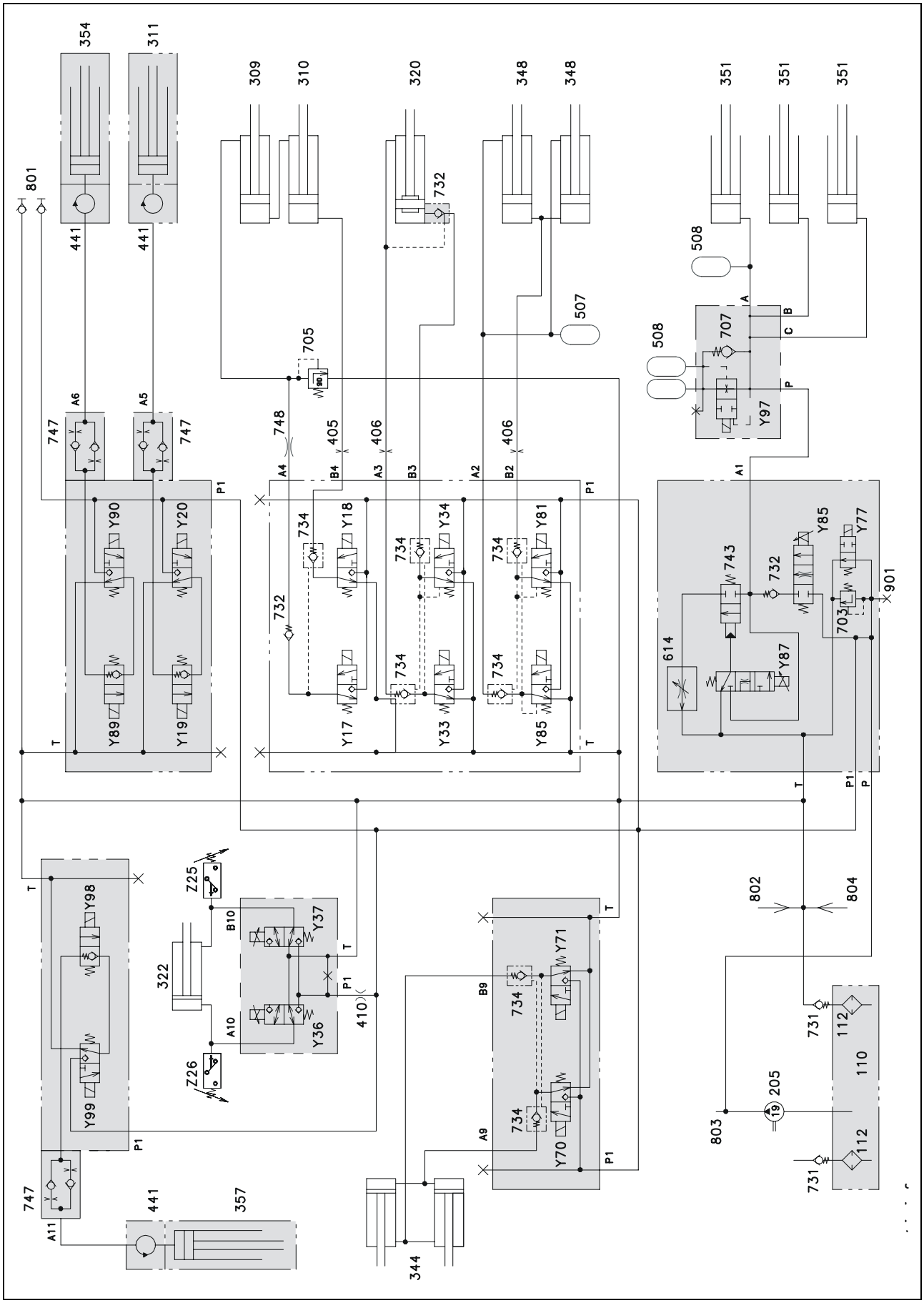

https://truckmanualshub.com/

Key to diagram II

P	- To returns valve
P1	- Parallel connection to valves from the returns valve
T	- Tank port (return)
Y17	- Solenoid valve for narrowing the threshing concave (close)
Y18	- Solenoid valve for widening the threshing concave (open)
Y19	- Solenoid valve for slowing down the threshing drum speed
Y20	- Solenoid valve for speeding up the threshing drum speed
Y33	- Solenoid valve for swinging out the unloading auger
Y34	- Solenoid valve for swinging in the unloading auger
Y36	- Solenoid valve for moving grain tank unloading aid forward
Y37	- Solenoid valve for moving grain tank unloading aid backward
Y70	- Solenoid valve for unlocking cutterbar springs
Y71	- Solenoid valve for locking cutterbar springs
Y77	- Master valve solenoid valve
Y81	- Solenoid valve for moving Uni-spreader in work position
Y82	- Solenoid valve for moving Uni-spreader in park position
Y85	- Solenoid valve for raising the front attachment
Y87	- Solenoid valve for lowering the front attachment
Y89	- Solenoid valve for slowing down the front attachment variable-speed drive
Y90	- Solenoid valve for speeding up the front attachment variable-speed drive
Y98	- Solenoid valve for slowing down the rotor variable-speed drive
Y99	- Solenoid valve for speeding up the rotor variable-speed drive
Z25	- Oil pressure switch . . . . . 120 bar
Z26	- Oil pressure switch . . . . . 80 bar
A1	- Hydraulic ram for raising / lowering the front end attachment
A2	- Hydraulic ram for moving the straw chopper in park position
B2	- Hydraulic ram for moving the straw chopper in work position
A3	- Hydraulic ram for swinging out the grain tank unloading auger
B3	- Hydraulic ram for swinging in the grain tank unloading auger
A4	- Hydraulic ram for narrowing the threshing concave (close)
B4	- Hydraulic ram for widening the threshing concave (open)
A5	- Hydraulic ram for threshing drum speed
A6	- Hydraulic ram for front end attachment speed
A7	- Hydraulic ram for cutterbar cross levelling RHS
B7	- Hydraulic ram for cutterbar cross levelling LHS
A9	- Hydraulic ram for locking the cutterbar springs
B9	- Hydraulic ram for unlocking the cutterbar springs
A10	- Hydraulic ram for grain tank unloading aid back
B10	- Hydraulic ram for grain tank unloading aid forwards

https://truckmanualshub.com/

4.3 Circuit diagram for straw and chaff spreading

Uni-spreader (spare part no. 082 990.1)

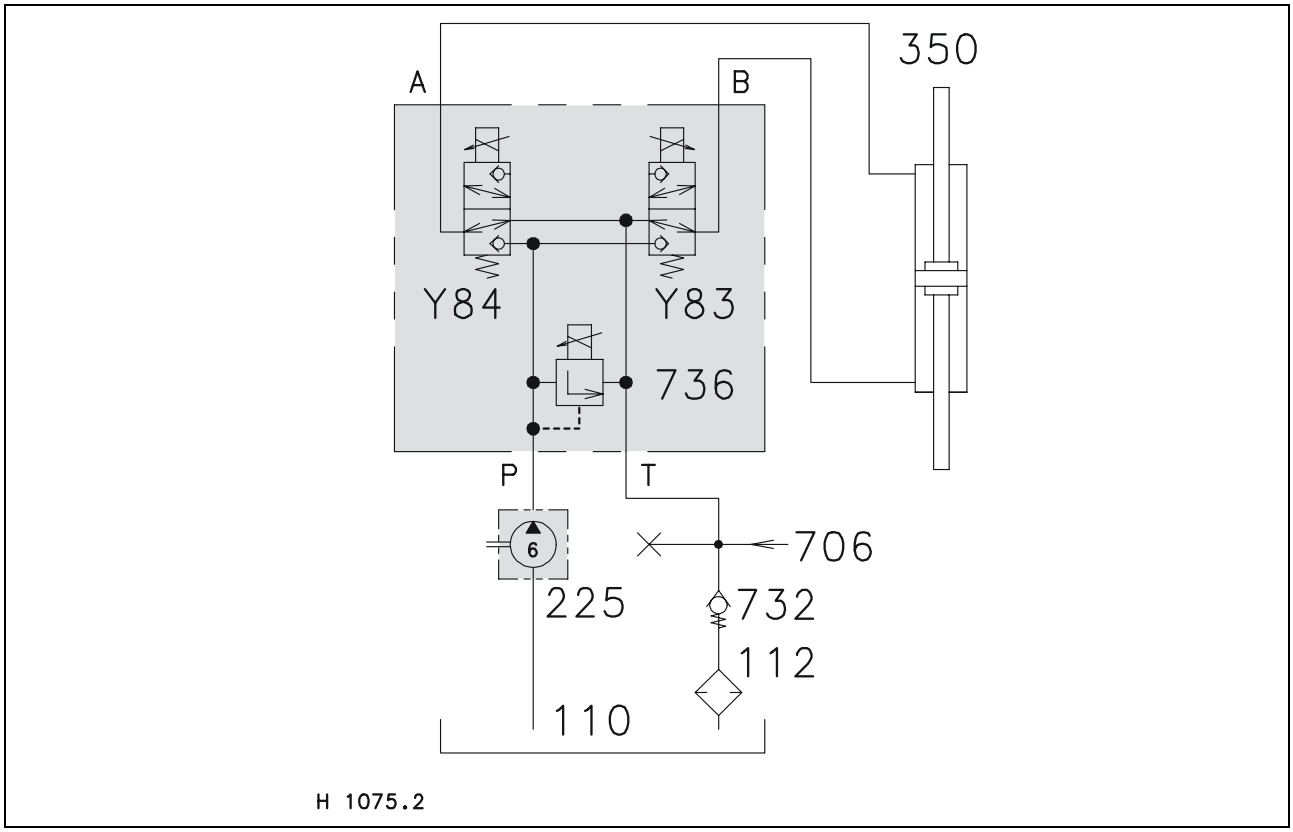

Uni-spreader (spare part no. 631 417.1)

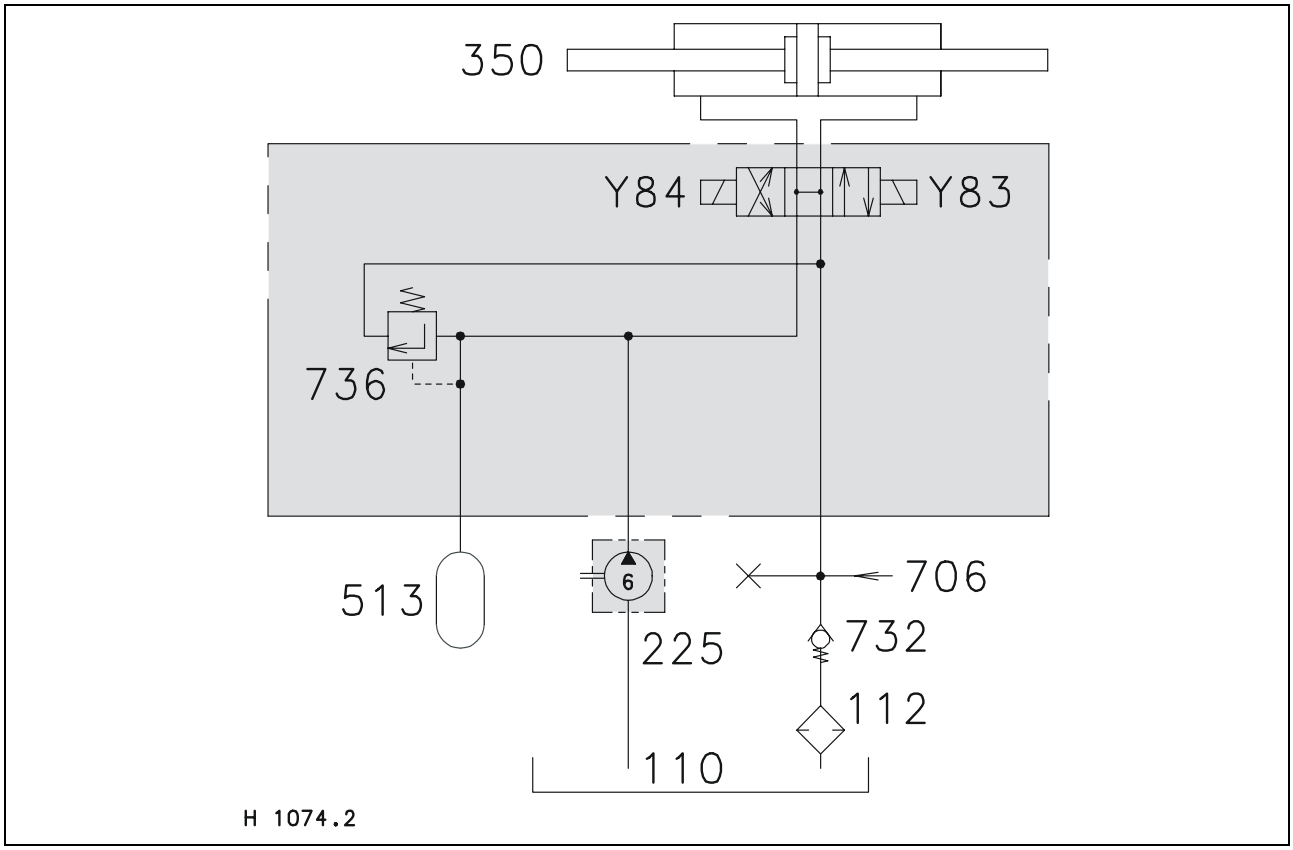

https://truckmanualshub.com/

Key to diagram

110	- Oil tank	
112	- Sieve filter for working hydraulics	
223	- Hydraulic motor for chaff spreader / straw spreader	19 cm³
224	- Hydraulic pump for chaff spreader / straw spreader	12 cm³
225	- Hydraulic pump for Uni-spreader	6 cm³
350	- Hydraulic ram, Uni-spreader	Ø 34/18 mm
513	- Accumulator	0.075 l / 15 bar
611	- Straw and chaff spreader flow control valve	8 – 19 l/min.
706	- Pressure relief valve	90±5 bar
732	- One-way valve, low-pressure hydraulics	
732	- One-way valve, working hydraulics return line	
735	- Pressure relief valve for chaff spreader	150 bar
736	- Pressure relief valve for Uni-spreader	55^{+5} bar
Y78	- Returns valve with pressure relief valve	60 bar
Y83	- Solenoid valve for swinging the Uni-spreader to the left	
Y84	- Solenoid valve for swinging the Uni-spreader to the right	

Circuit diagram for straw and chaff spreader (straw walker machines)

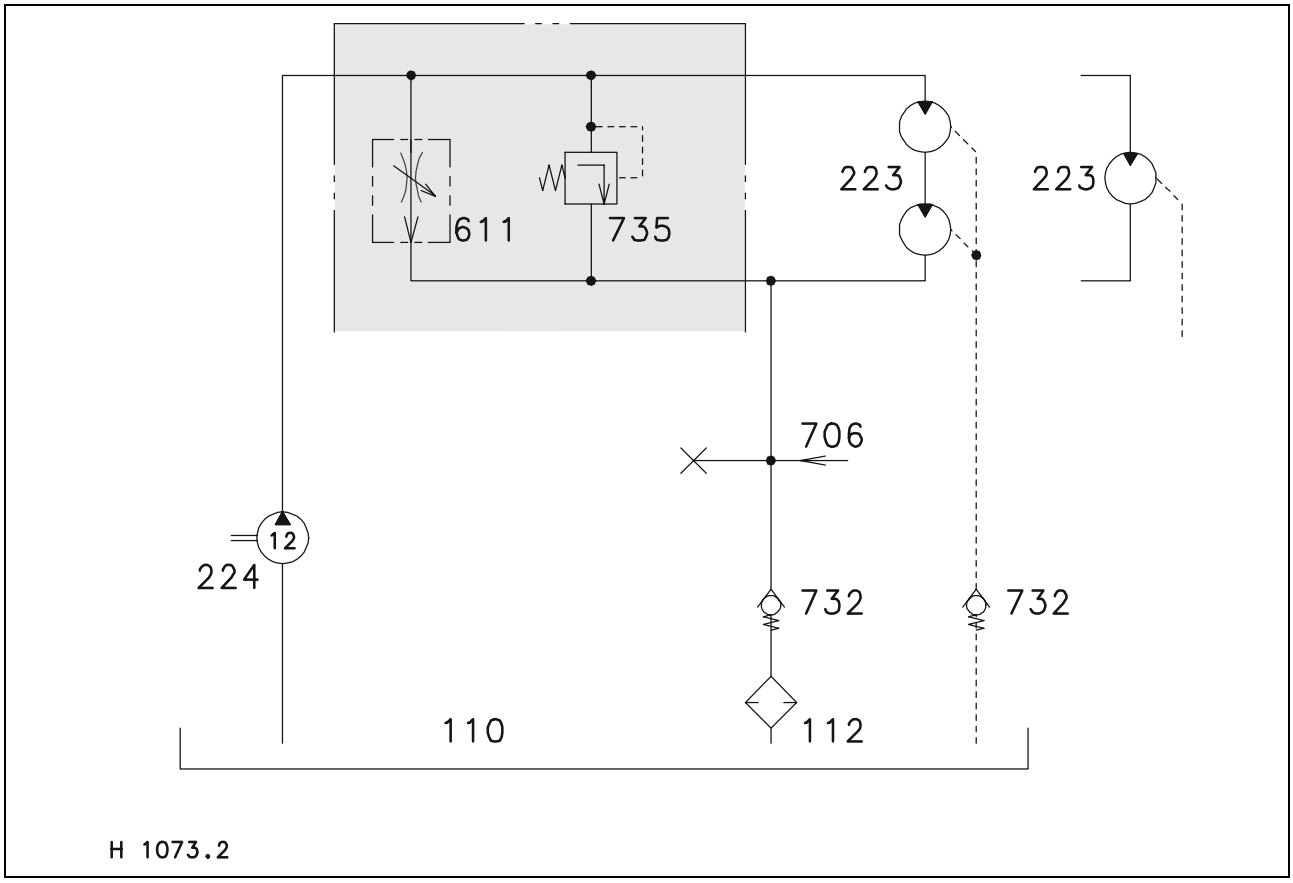

https://truckmanualshub.com/

4.4 Hydraulic reel drive

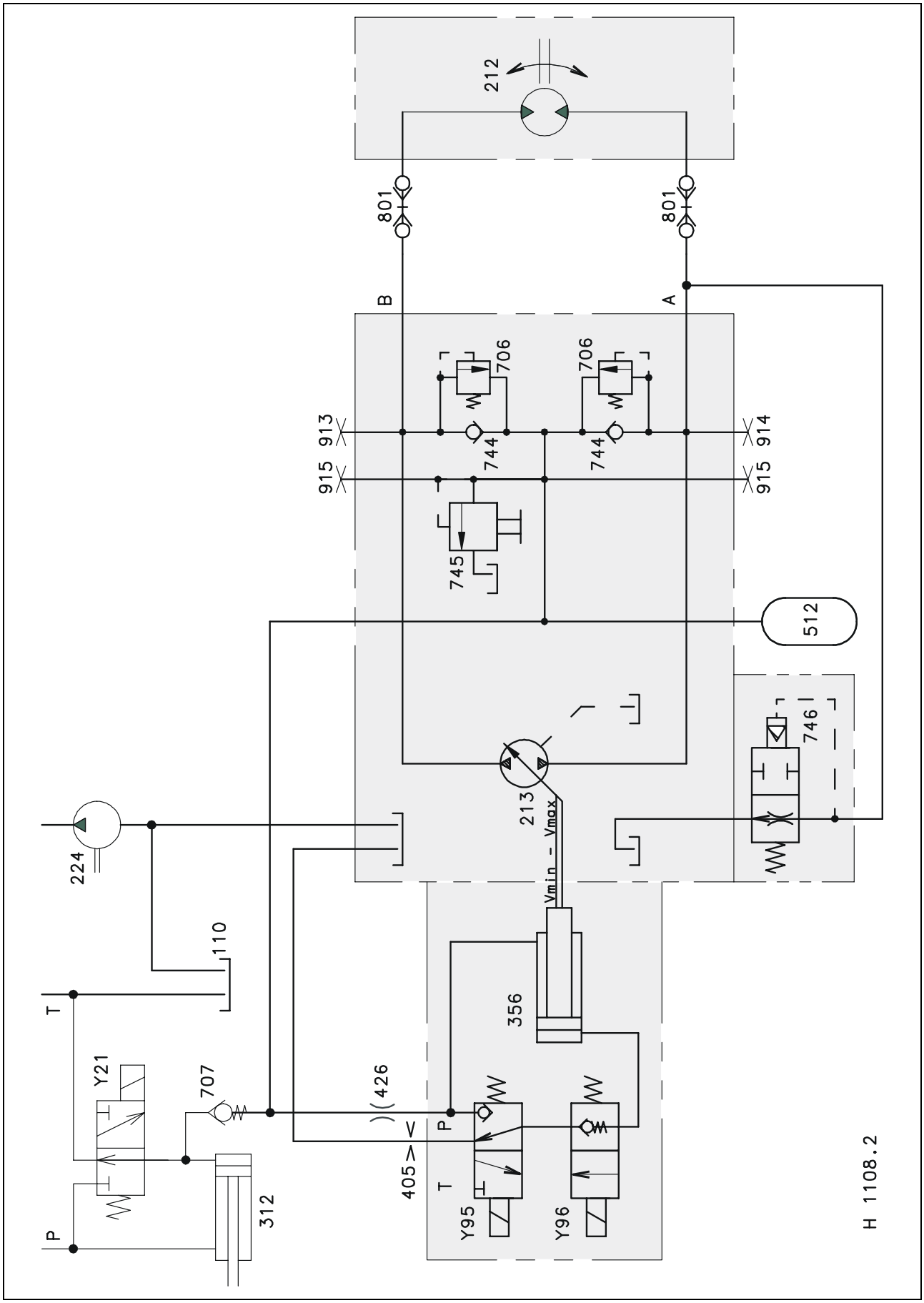

https://truckmanualshub.com/

Key to diagram

110	- Oil tank	
212	- Reel drive motor	
213	- Reel drive pump	15 cm³
224	- Chaff / straw spreader drive pump	
312	- Threshing mechanism clutch	
356	- Reel drive control variable displacement pump	
424	- Restrictor	0.6 mm
406	- Orifice plate	0.8 mm
512	- Reel drive accumulator	
706	- Pressure relief valve	140 bar
707	- Pressure holding valve (One-way valve)	
744	- Reel drive feed valve	
745	- Reel drive feed pressure limit valve	(blocked)
746	- Reel drive purge valve	25 bar
801	- Quick release coupling	
913	- Measuring port for reel drive high pressure forward	
914	- Measuring port for reel drive high pressure backward	
915	- Measuring port for reel drive charge pressure	
Y21	- Solenoid valve for threshing engagement	
Y95	- Solenoid valve for speeding up the reel speed	
Y96	- Solenoid valve for slowing down the reel speed	
A	- Consumer port	
P	- Pump port	
T	- Tank port	

Function

Hydraulic reel speed control is realized using a variable displacement axial piston pump (213). The pump drive and therefore the sense of rotation depends on the front attachment.

With the threshing mechanism engaged, the system is supplied with oil (low-pressure hydraulic system). Cylinder (356) is controlled by solenoid valves (Y95/Y96) and determines the angle (= displaced volume) of the axial piston pump (213). The solenoid valves (Y95/Y96) are activated by the reel module in a modulated way.

In the respective high-pressure circuit, the pressure relief valves (706) protect the system at 140 bar.
To protect the system against overheating, a certain oil quantity is purged out from the return circuit via purge valve (746) when the "Reel forward" function is activated.
Purge valve (746) is hydraulically blocked when the "Reel backward" function is activated, thus avoiding purging out via the high-pressure circuit.

Should the reel run on after the threshing mechanism is shut down, accumulator (512) keeps pump and motor from running dry.

https://truckmanualshub.com/

4.5 Position of components

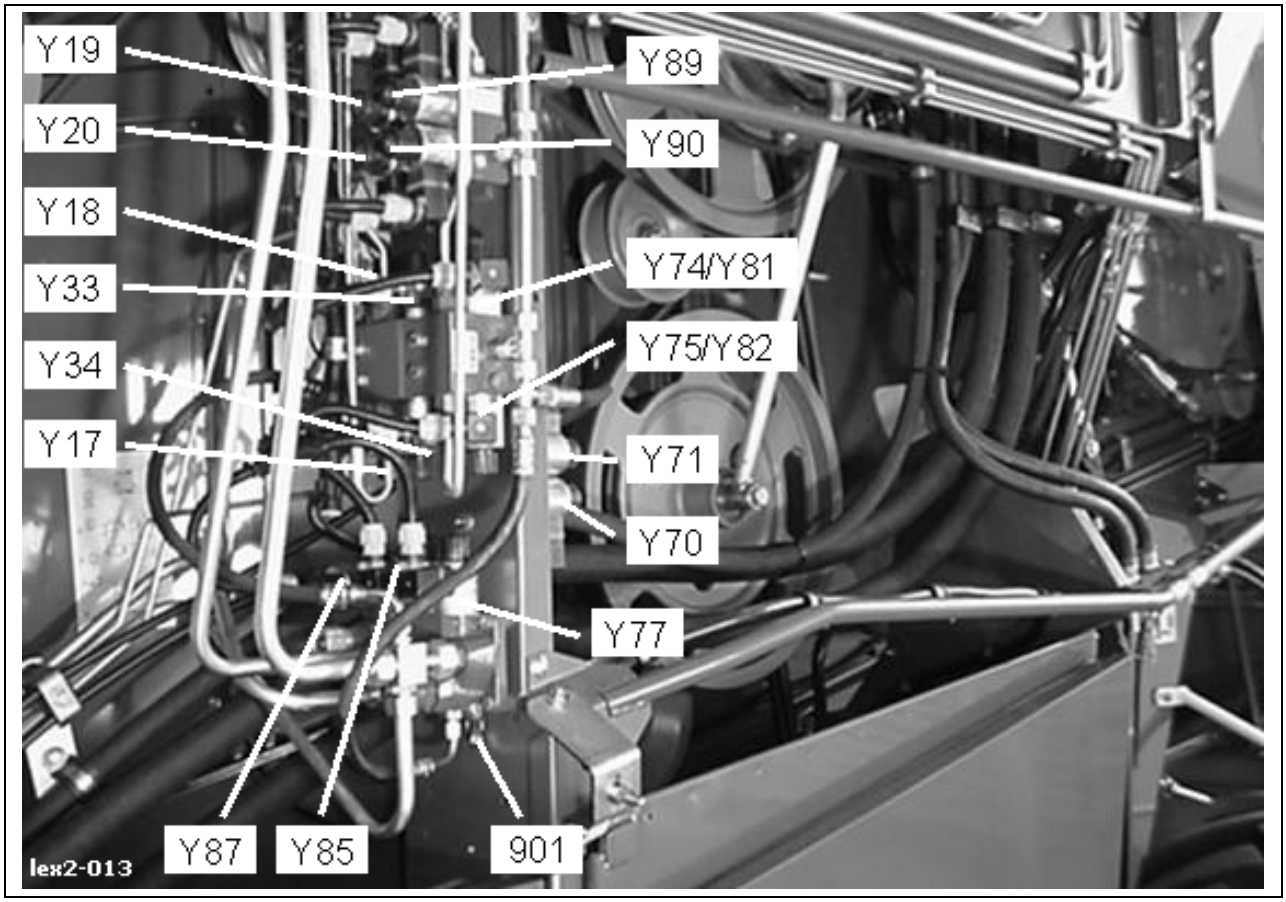

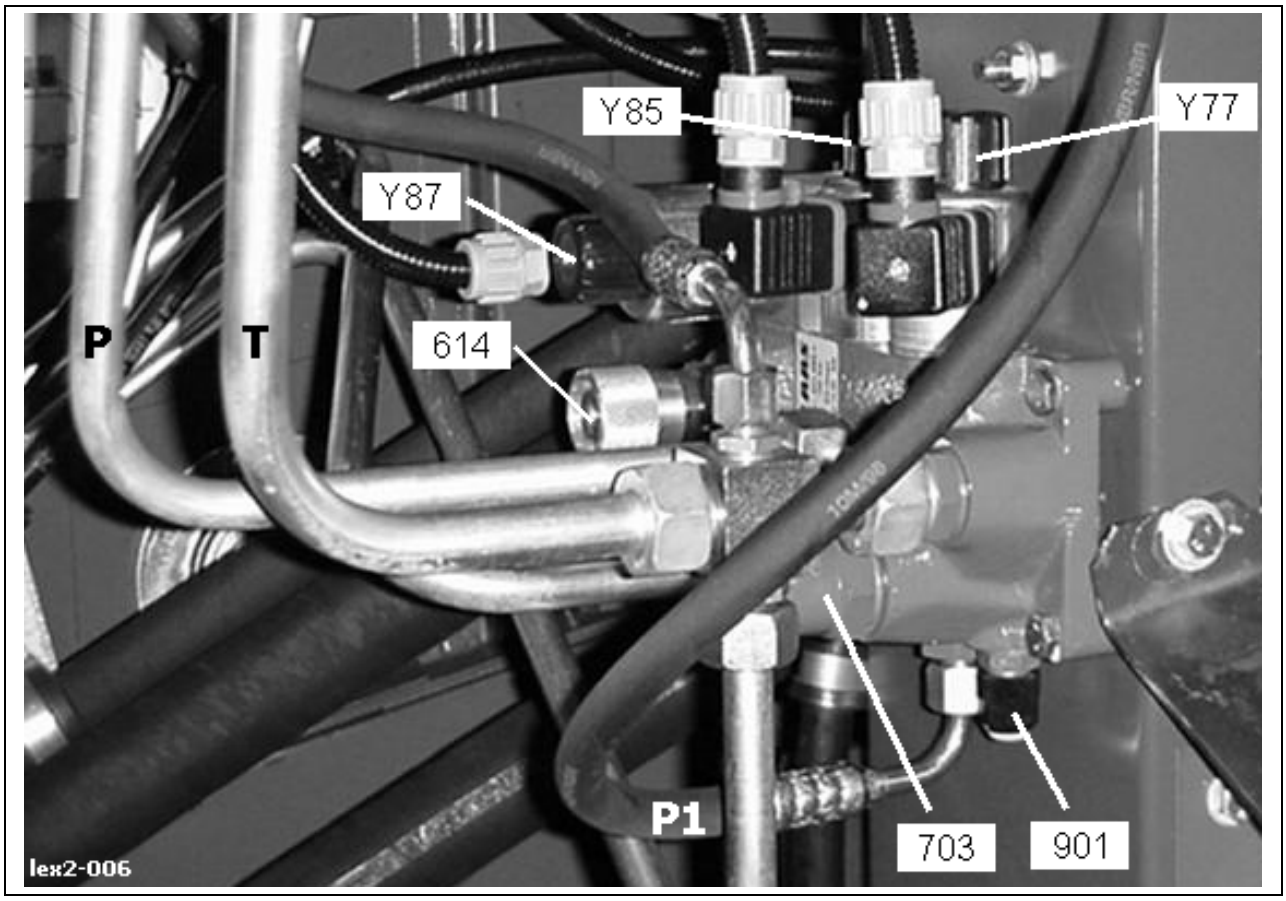

https://truckmanualshub.com/

Key to diagram

614	- Flow control valve . . . . . 5 – 50 l/min.
703	- Pressure relief valve . . . . . 175^{+15} bar
901	- Working hydraulics test port
Y17	- Solenoid valve for narrowing the threshing concave (close)
Y18	- Solenoid valve for widening the threshing concave (open)
Y19	- Solenoid valve for slowing down the threshing drum speed
Y20	- Solenoid valve for speeding up the threshing drum speed
Y33	- Solenoid valve for swinging out the unloading auger
Y34	- Solenoid valve for swinging in the unloading auger
Y70	- Solenoid valve for unlocking cutterbar springs
Y71	- Solenoid valve for locking cutterbar springs
Y74	- Solenoid valve for moving straw chopper in work position
Y75	- Solenoid valve for moving straw chopper in park position
Y77	- Master valve solenoid valve
Y81	- Solenoid valve for moving Uni-spreader in work position
Y82	- Solenoid valve for moving Uni-spreader in park position
Y85	- Solenoid valve for raising the front attachment
Y87	- Solenoid valve for lowering the front attachment
Y89	- Solenoid valve for slowing down the front attachment variable-speed drive
Y90	- Solenoid valve for speeding up the front attachment variable-speed drive
P	- To returns valve
P1	- Parallel connection to valves from the returns valve
T	- Return to tank

https://truckmanualshub.com/

Layout of the components

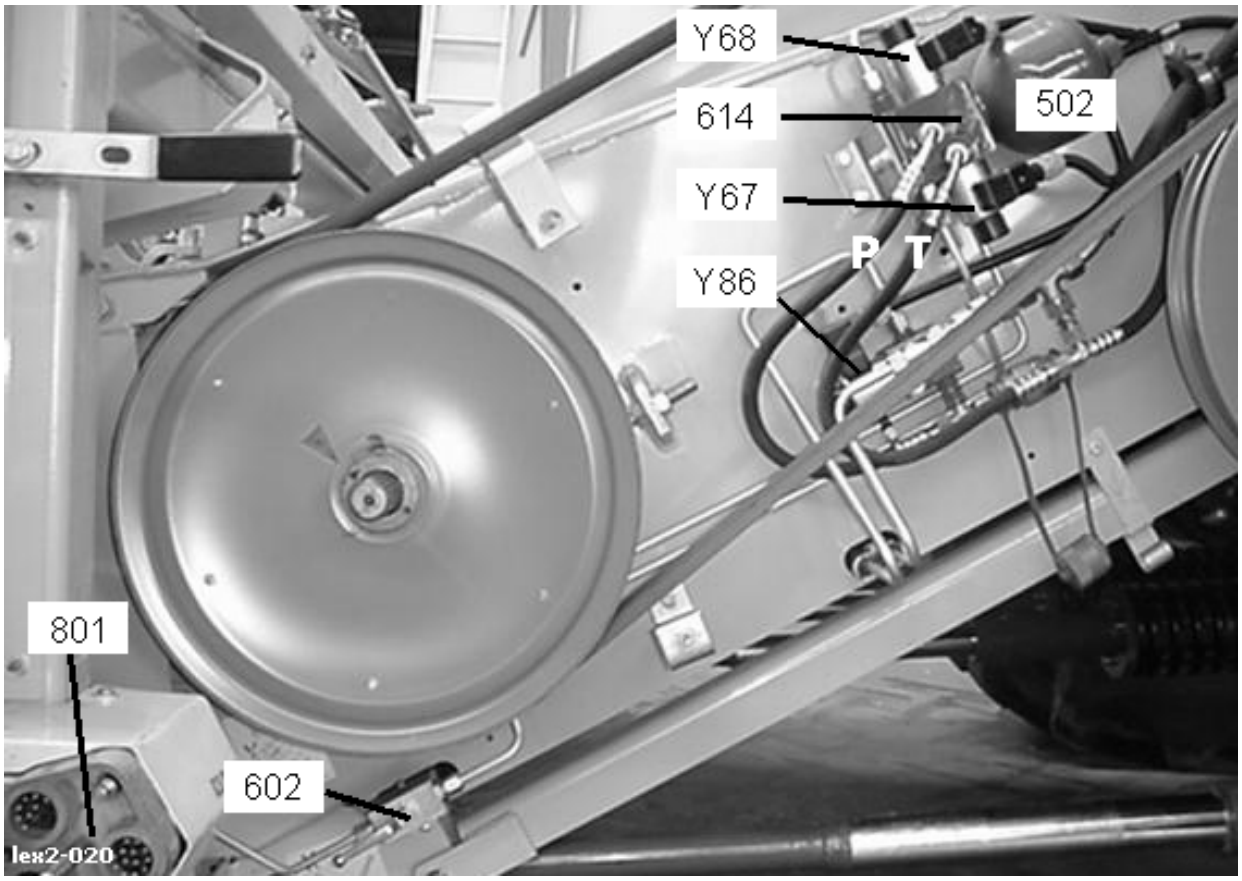

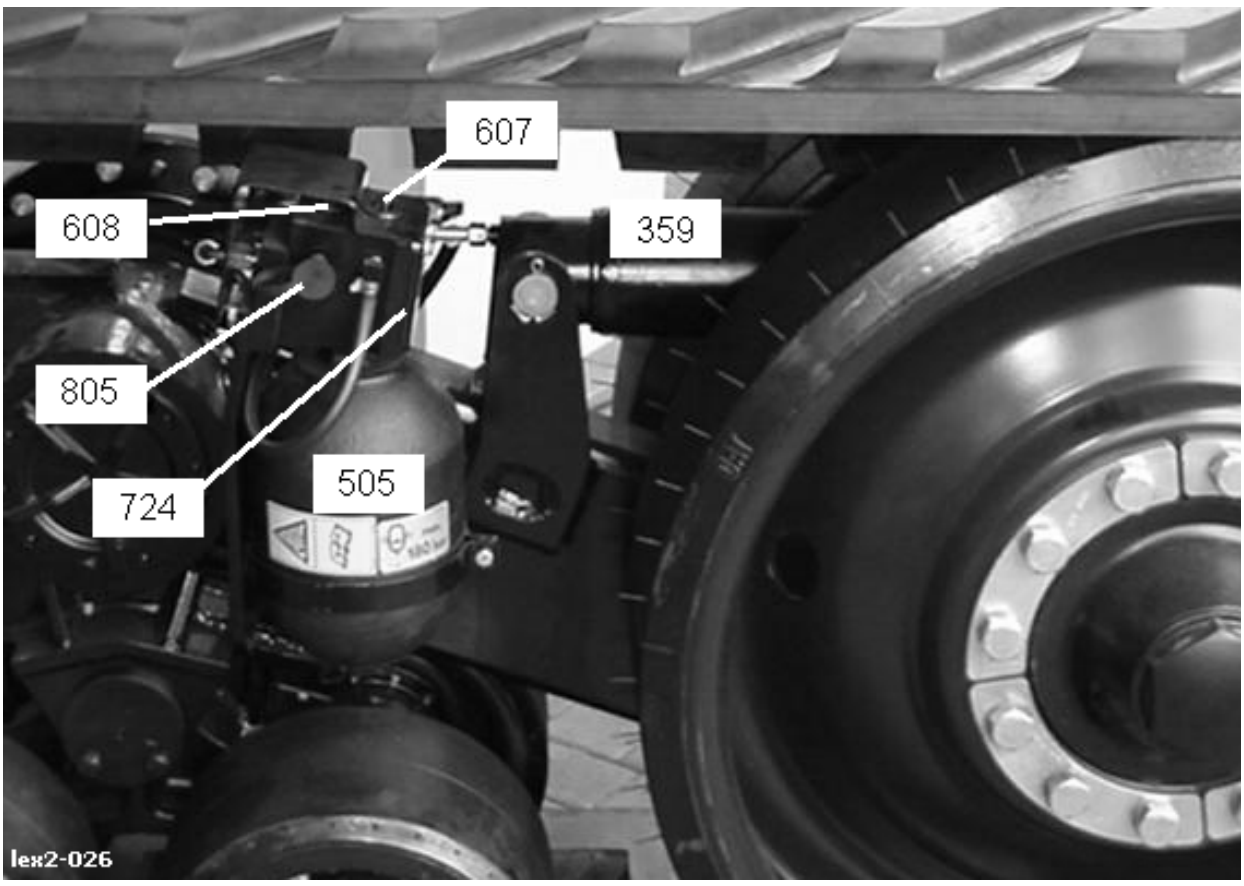

https://truckmanualshub.com/

Key to diagram

359	- Hydraulic ram for belt tension
502	- Accumulator for cross-levelling . . . . . 0.7 l / 80 bar
505	- Accumulator . . . . . 3.5 l / 100 bar
602	- Tap
607	- Breather
608	- Filling valve
724	- Safety valve (burst screw)
740	- Flow control valve
801	- Quick release coupling for front attachment (P/T)
805	- Filling connection MTS
Y67	- Solenoid valve for cutterbar cross-levelling (left-hand side)
Y68	- Solenoid valve for cutterbar cross-levelling (right-hand side)
Y86	- Solenoid valve for reversing the cutterbar
P	- To returns valve
T	- Back to tank

https://truckmanualshub.com/

Layout of the components

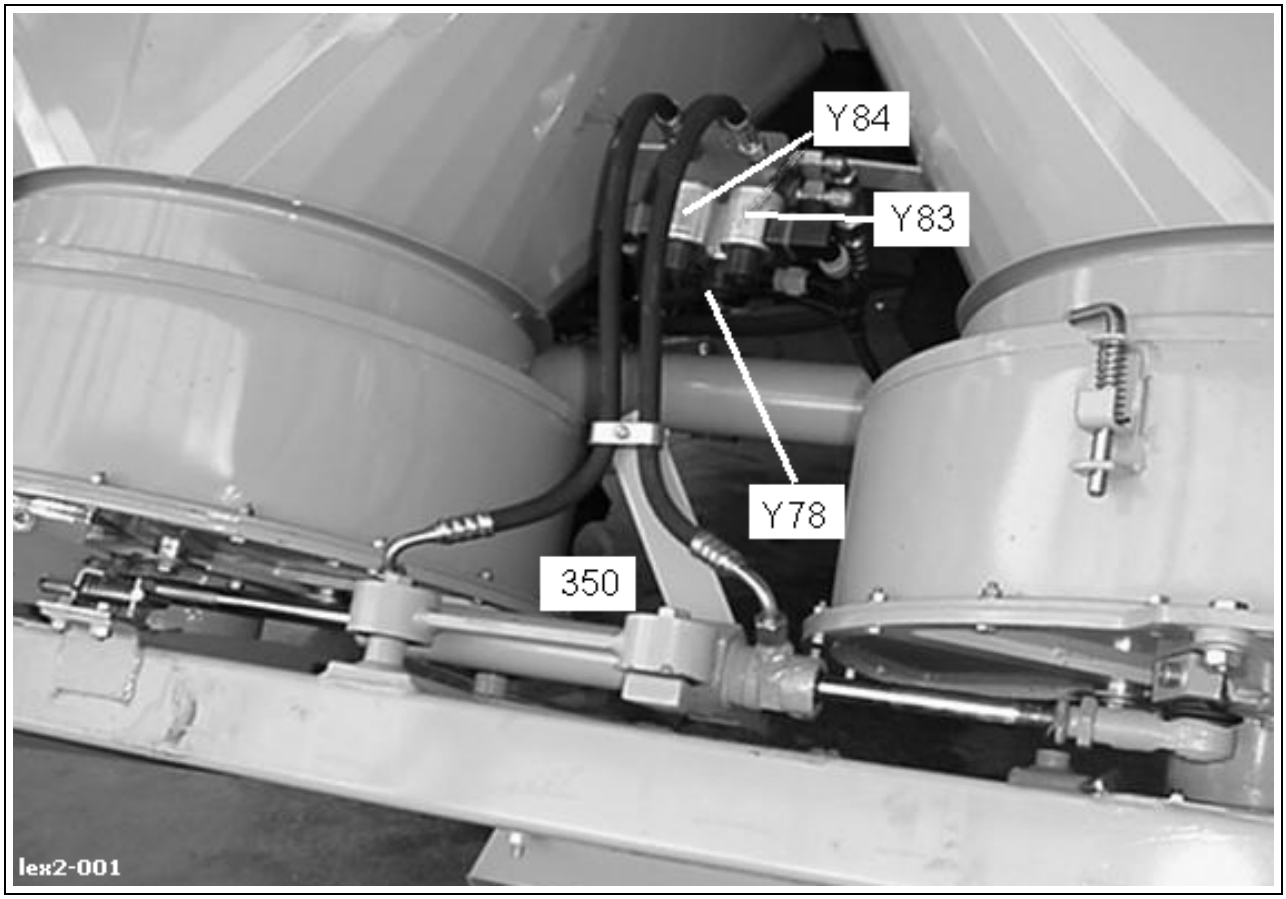

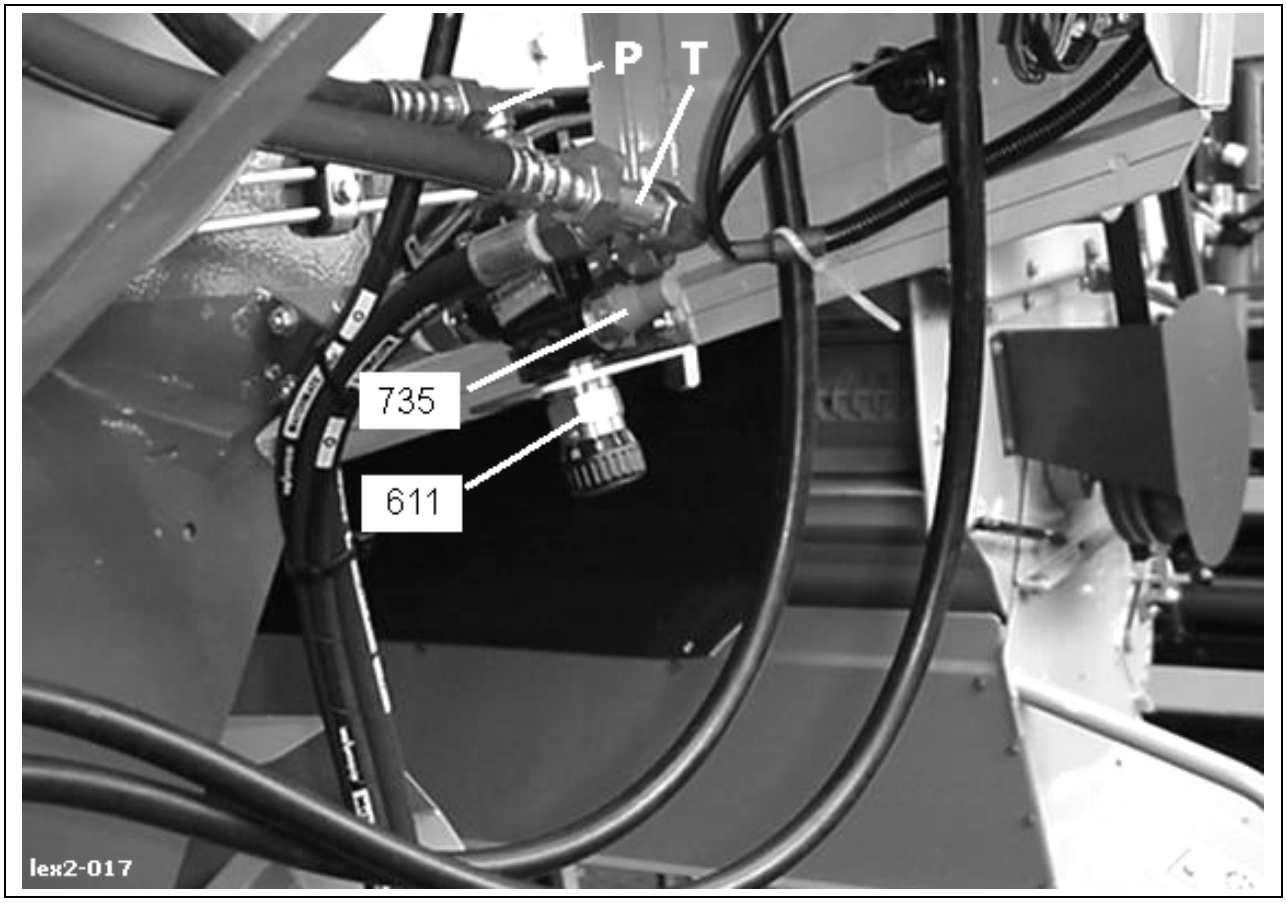

https://truckmanualshub.com/

Key to diagram

350	- Uni-spreader hydraulic ram . . . . . Ø 34/18 mm
611	- Straw and chaff spreader flow control valve
735	- Chaff spreader pressure relief valve . . . . . 150 bar
Y78	- Returns valve with pressure relief valve . . . . . 60 bar
Y83	- Solenoid valve for swinging the Uni-spreader to the left
Y84	- Solenoid valve for swinging the Uni-spreader to the right
P	- To returns valve
T	- Back to tank

https://truckmanualshub.com/

4.6 AUTO CONTOUR cutterbar cross levelling

Solenoid valve (4/3 way) with accumulator and lock valve

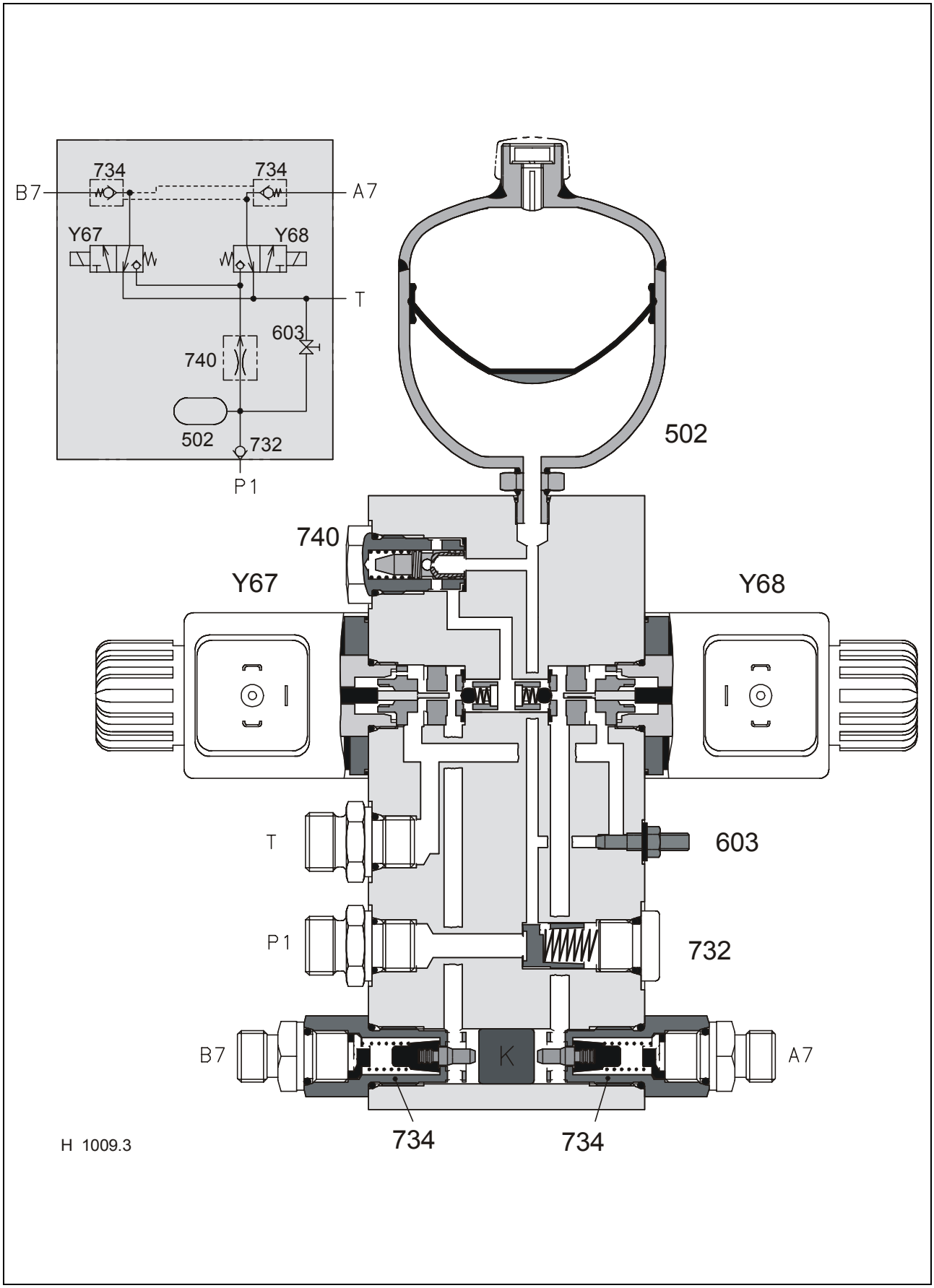

https://truckmanualshub.com/

Key to diagram

502 - Accumulator for cross-levelling . . . . . 0.7 l / 80 bar
603 - Pressure relief screw
732 - One-way valve (delivery valve)
734 - Lock valve (lock-up valve unit)
740 - Flow control valve

Y67 - Solenoid valve for cutterbar cross-levelling (left-hand side)
Y68 - Solenoid valve for cutterbar cross-levelling (right-hand side)

T - Tank port
A7 - Hydraulic ram port for cutterbar cross-levelling (right-hand side)
B7 - Hydraulic ram port for cutterbar cross-levelling (left-hand side)
K - Plunger

Caution: When dismantling the positions 732, 502, 740, Y67 or Y68, the pressure must be released from the accumulator using the pressure relief screw (603).

Function

As soon as the cutterbar is switched on, the module for the CAC switches the returns valve on for 1 second. This will cause the system pressure to charge the accumulator (502) up via the one way valve (732).
The CAC module will also switch the returns valve, should either solenoid valves (Y67/Y68) not be activated within a total of 10 seconds. This will ensure that the accumulator (502) is kept fully charged.

The pressure in the system is locked up by the two ball valves of the solenoid valves (Y67/Y68). The flow control valve (740) is there to ensure even flow with different pressures.

Should there be the requirement to tilt the cutterbar, then the CAC module will send a signal down to one of the solenoids (Y67/Y68). The relative ball is pushed off its seat, and the return to tank is closed. The pressure then builds against the plunger of the lock valve, which then in turn opens the opposite valve (734) for port A or B.
The return oil from the hydraulic rams is returned via the non switched solenoid valve (Y67/Y68) back to tank. The pressure then builds up against the opposite lock valve (734), which in turn opens allowing the oil to flow out to the hydraulic rams.

Note: Should the switching time for one of the solenoids (Y67/Y68) exceed 40 seconds, then the CAC module will switch off the supply.

https://truckmanualshub.com/

Auto contour, cutterbar cross levelling
Hydraulic ram with piston guide

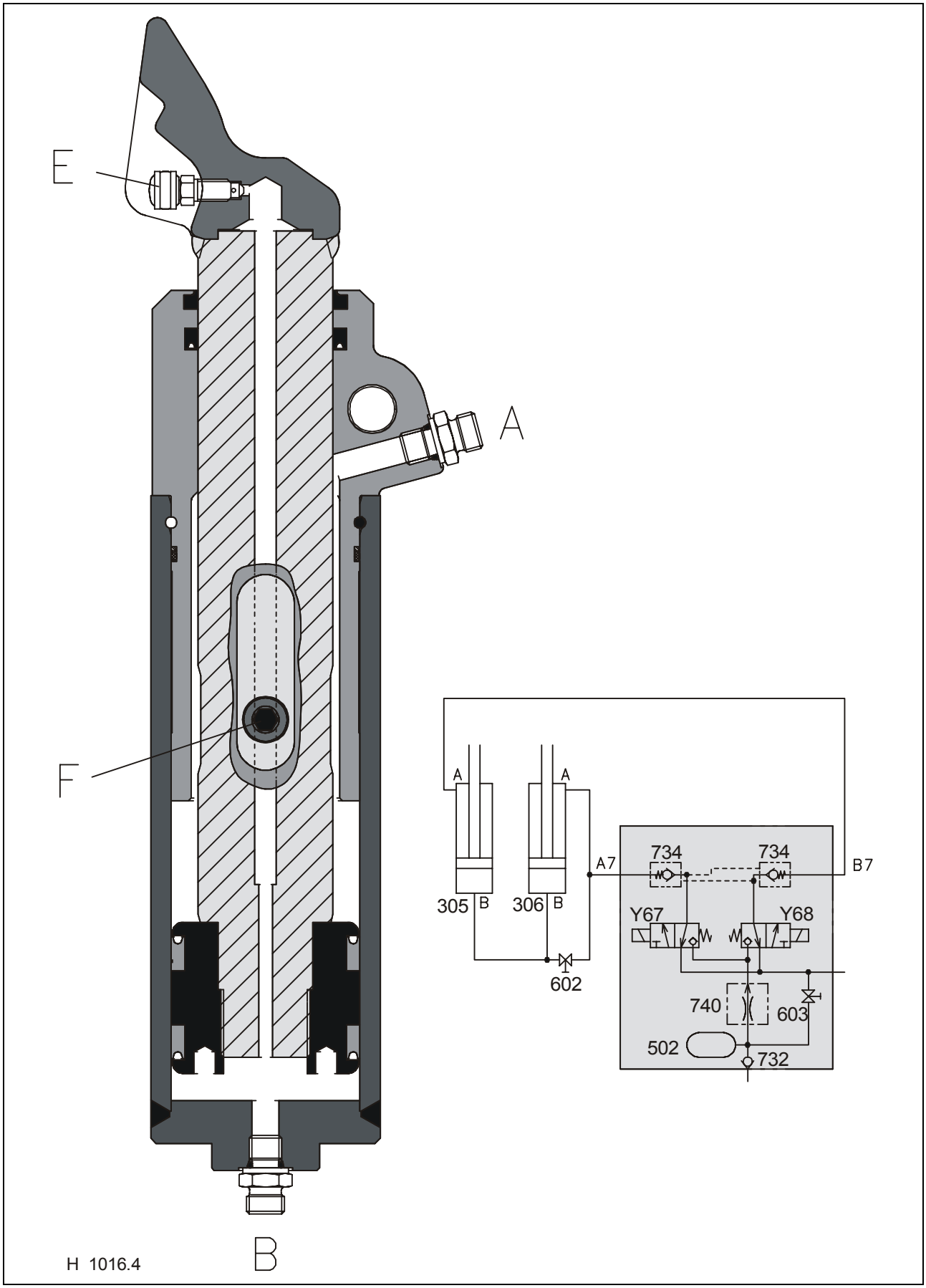

https://truckmanualshub.com/

Key to diagram

305 - Hydraulic ram for cross-levelling (right-hand side) . . . . . Ø 70 / 50 mm
306 - Hydraulic ram for cross-levelling (left-hand side) . . . . . Ø 70 / 50 mm
502 - Cross-levelling accumulator . . . . . 0.7 l / 80 bar
602 - Tap
603 - Pressure relief screw
732 - One-way valve (delivery valve)
734 - Lock valve (lock-up valve unit)
740 - Flow control valve

Y67 - Solenoid valve for cutterbar cross-levelling (left-hand side)
Y68 - Solenoid valve for cutterbar cross-levelling (right-hand side)

A - Cross-levelling solenoid valve port
B - Hydraulic ram port (right-/left-hand side)
E - Bleed screw
F - Piston guide

Caution: When dismantling 732, 502,740, Y67 or Y68, the pressure must be released from the accumulator using the pressure relief screw (603).

Bleeding the hydraulic rams

1. Remove the front end attachment.
2. Open the tap (602)
3. Operate the rocker switch towards the right, so that both hydraulic rams (305/306) have fully extended.
4. Slacken off the bleed screw E on both rams.
5. Operate the rocker switch quickly once more, until the oil comes out air free.
6. After all the air has been expelled, retighten the bleed screw E
7. Operate the rocker switch, until the left hand ram (306) is fully retracted.
8. Close off the tap (602)
9. Using the rocker switch, extend and retract both rams (305/306) several times.

Lowering both rams
(for multimaster)

1. Attach the front end attachment.
2. Operate the rocker switch so that the right hand ram (305) extends fully and the front end attachment tilts anti clockwise.
3. Open the tap (602)
4. Operate the rocker switch so that the right hand ram (305) fully retracts.
5. Close the tap (602).

Levelling both rams
(for cutterbars)

1. Remove the front end attachment.
2. Open the tap (602).
3. Operate the rocker switch towards the right, so that both hydraulic rams (305/306) have fully extended.
4. Operate the rocker switch, until the right hand ram (305) is fully retracted.
5. Close the tap (602)
6. Using the rocker switch, level out both hydraulic rams (305/306).

https://truckmanualshub.com/

4.7 Uni-spreader and straw chopper adjustment

Solenoid valve (4/3 way) with lock valve

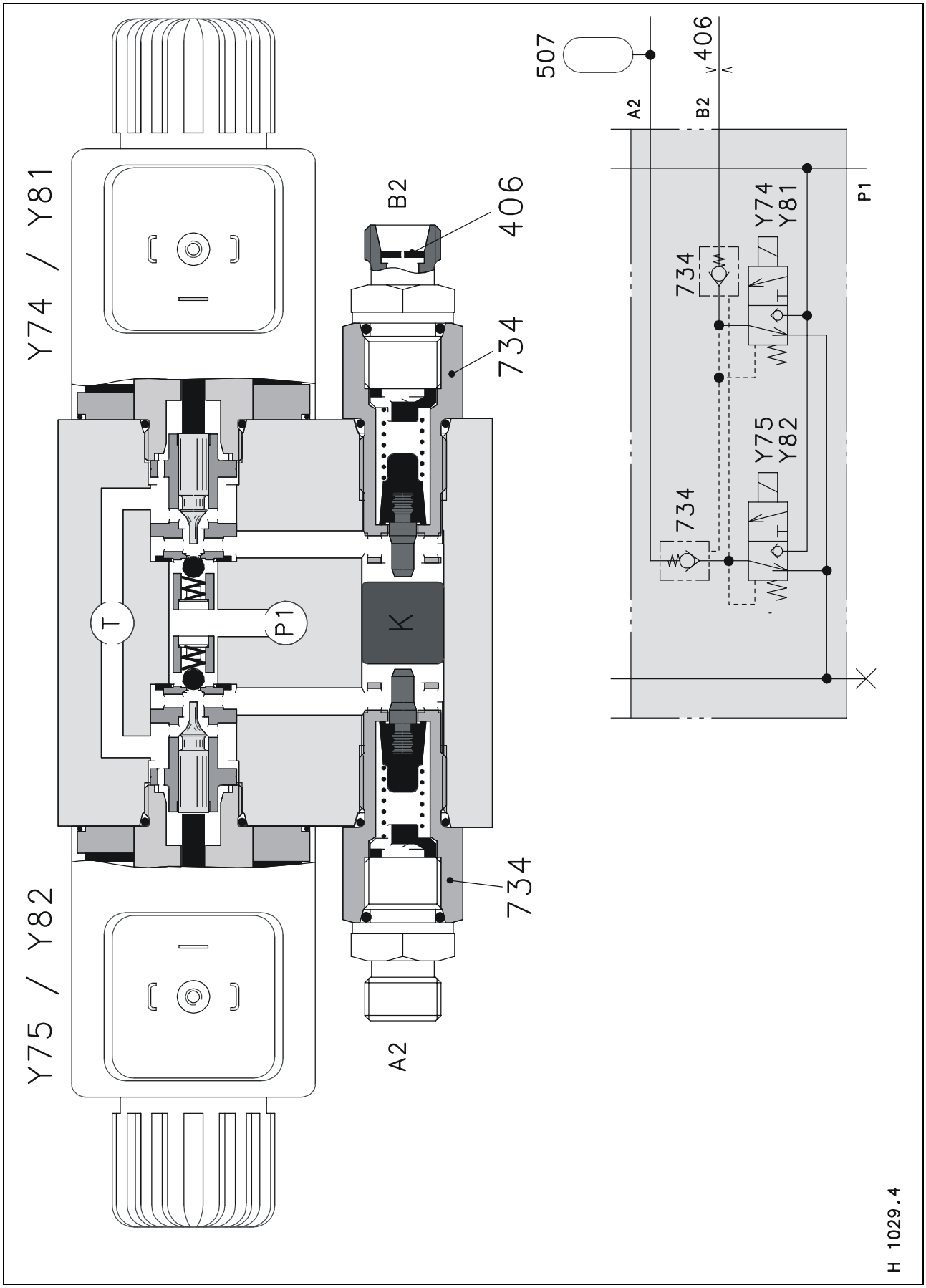

https://truckmanualshub.com/

Key to diagram

406	- Restrictor . . . . . Ø 0.8 mm
507	- Position accumulator for Uni-spreader . . . . . 0.075 l / 60 bar
734	- One-way valve (lock-up valve unit)
Y74	- Solenoid valve for moving straw chopper in work position
Y75	- Solenoid valve for moving straw chopper in park position
Y81	- Solenoid valve for moving Uni-spreader in work position
Y82	- Solenoid valve for moving Uni-spreader in park position
T	- Connection to tank
P1	- Pump connection via returns valve
A2	- Hydraulic ram port for Uni-spreader/straw chopper park position
B2	- Hydraulic ram port for Uni-spreader/straw chopper work position
K	- Plunger

Function – neutral

Both sides of the ram are locked up by the one-way valves (734) at ports A and B.

Function

When it is required to move in a particular direction, the relative solenoid valve (Y74/Y75/Y81/82) is operated along with the returns valve. The activated solenoid pushes the ball of its seat and closes to flow to tank. The pressure then builds up against the plunger (K) which in turn opens the opposite lock valve (734) on part A or B.
The return flow from the ram, then flows back via the non switched solenoid (Y74/Y75/Y81/82) back to tank. The pressure builds in the lock valve, opening the second lock valve (734) and this allows the oil to flow out to the ram, either extending or retracting it.

Pressure limit

Because the diameter of the ram is relatively small, the pressure is limited to **approx. 120 bar**.
Because of the requirement of the valve inserts and the relatively large size of ball, it is not enough to rely on the electromagnetic force of the solenoid to maintain system pressure. For this reason the ball in the valve unit will release oil at 120 bar.

Note: The valve insert with the pressure control is only fitted to the chopper adjustment on the straw walker machines. The adjustment of the Uni-spreader on the rotor machine is done by a spool valve at system pressure of 175 ± 15 bar.

https://truckmanualshub.com/

4.8 Intake housing (front attachment) speed regulation/Rotor variable-speed gear

Solenoid valve (3/3 way) with restrictor valve

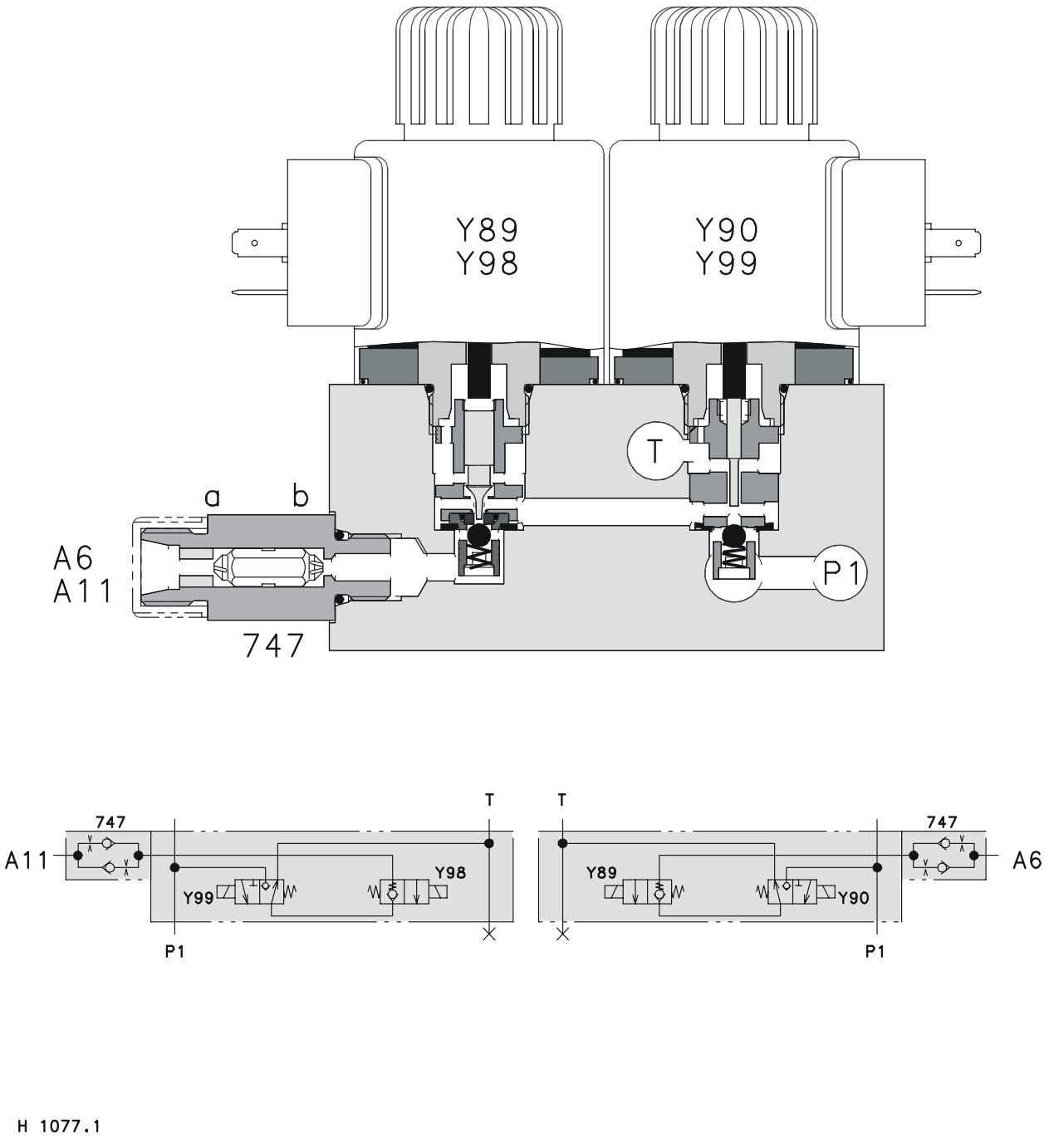

https://truckmanualshub.com/

Key to diagram

747	- Double restrictor valve . . . . . Ø 0.3 mm
Y98	- Solenoid valve for slowing down the rotor variable-speed drive
Y99	- Solenoid valve for speeding up the rotor variable-speed drive
Y89	- Solenoid valve for slowing down the front attachment variable-speed drive
Y90	- Solenoid valve for speeding up the front attachment variable-speed drive
T	- Connection to tank
P1	- Pump connection via returns valve
A6	- Intake speed adjusting ram port
A11	- Rotor speed adjusting ram port
a	- Restrictor valve – 1 notch
b	- Restrictor valve – 2 notches

Function – neutral

The oil in the hydraulic ram is locked at A by means, the ball in the valve.

Function – speeding up

The solenoid valve (Y90/Y99) and the returns valve are switched. The relative spool is then operated and pushes the ball off its seat. At the same time, the return flow to tank is blocked off. The pressure then builds up, and pushes the ball of the other solenoid valve (Y89/Y98) off its seat. The oil then flows via the notch in the restrictor (747) and out through the port A.

Function – slowing down the drum speed

The solenoid valve (Y89/Y98) is switched without the returns valve. The respective spool is then operated and pushes the ball off its seat. At the same time, the return flow to tank is released via the two notches of the restrictor valve (747) and the valve insert of the non switched solenoid valve (Y90/Y99).

Note: So that speeding up and slowing down the drum speed are the same, the oil coming from the system when the variator is opening with the aid of the springs goes through the restrictor (b) with the two notches.

Note: The solenoid for the “slow” function is fitted with a return spring and is marked with an “F” on the face side.

https://truckmanualshub.com/

Intake housing (front attachment) speed regulation

Hydraulic ram with rotary coupling

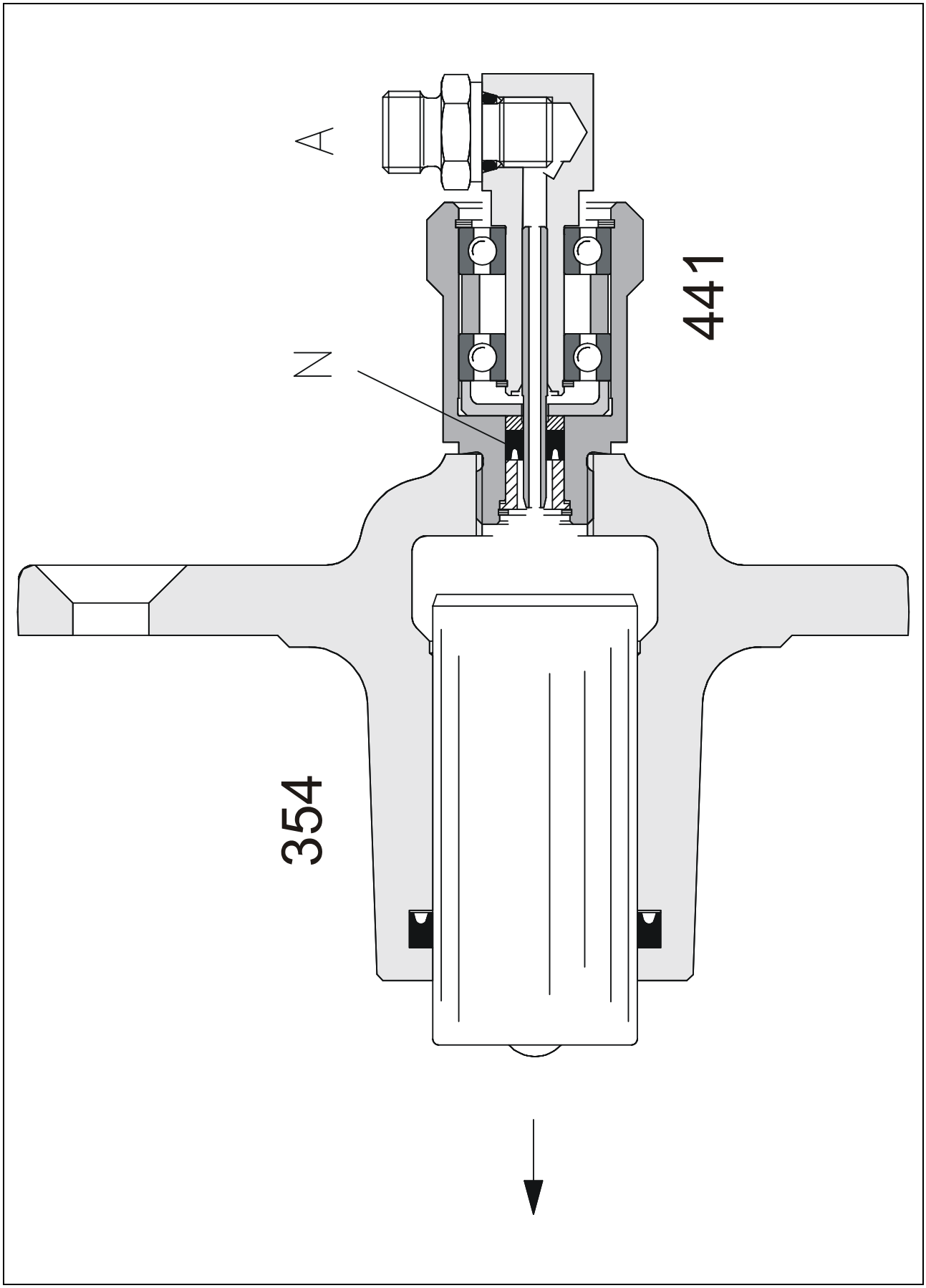

https://truckmanualshub.com/

Key to diagram

354 - Hydraulic ram for front attachment variable-speed drive . . . . . Ø 35 mm
441 - Rotary coupling

A - Solenoid valve for adjusting the speed
N - Seal

https://truckmanualshub.com/

4.9 Cutterbar spring locking

Solenoid valve (4/3 way) with lock valve

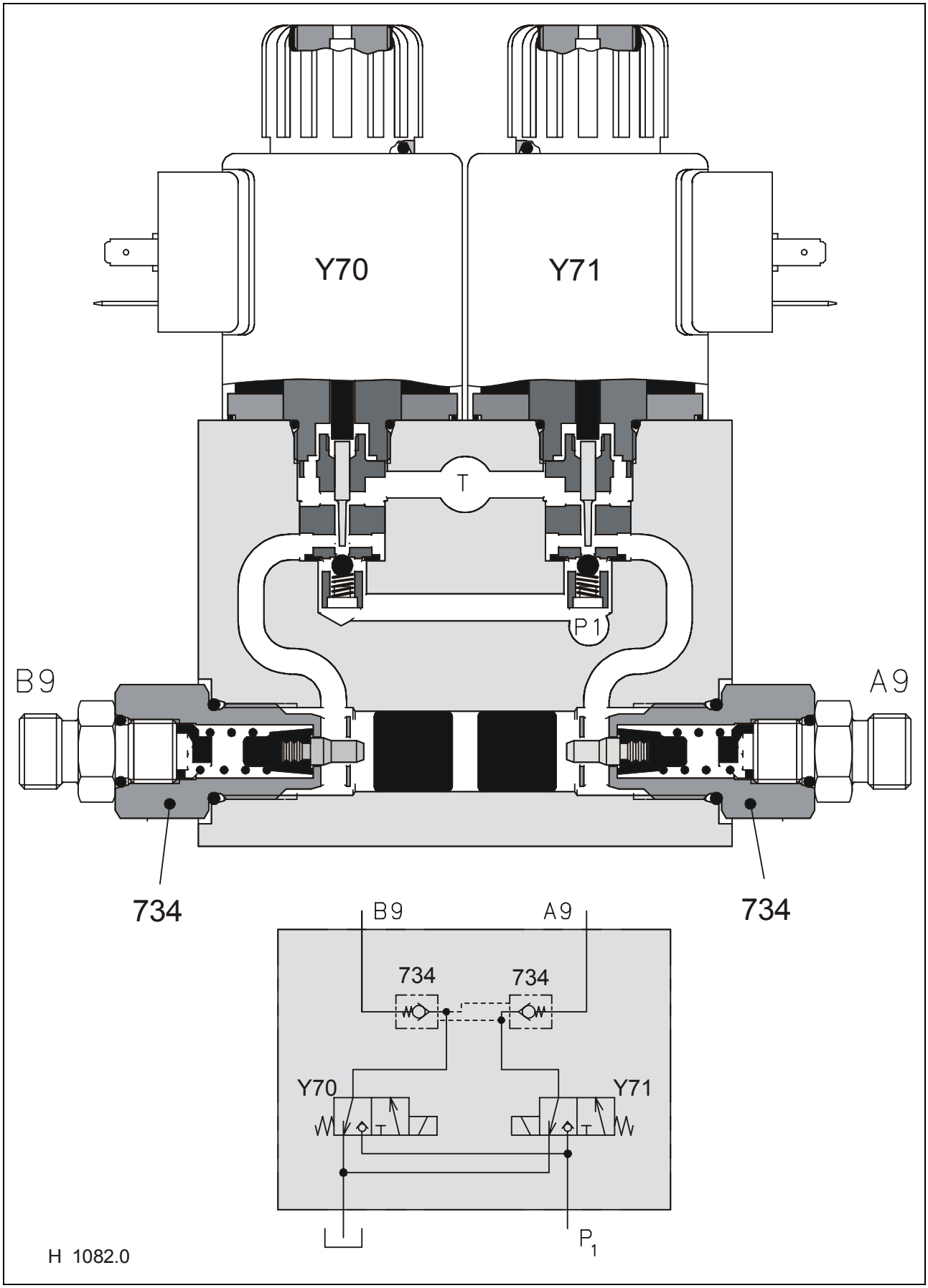

https://truckmanualshub.com/

Key to diagram

734	- One-way valve (lock-up valve unit)
Y70	- Solenoid valve for unlocking cutterbar springs
Y71	- Solenoid valve for locking cutterbar springs
T	- Connection to tank
P1	- Pump connection via the returns valve
A9	- Hydraulic ram port for locking the cutterbar springs
B9	- Hydraulic ram port for unlocking the cutterbar springs
V	- Valve insert
K	- Plunger

Function – neutral

Both ends of the hydraulic ram are locked by the one-way valves (734) on ports A and B.

Function

When required, the relative solenoid valve (Y70/Y71) is operated and at the same time the returns valve is also opened.
The relative spool pushes the ball off its seat and at the same time closes the flow to tank. The pressure then flows down to the lock valve, then builds up and presses on the plunger. The plunger (K) then operates the opposite lock valve (734) on port A or B.
The return oil from the ram, then flows back to tank via the valve insert of the non switched solenoid valve (Y70/Y71). The pressure then builds up and operates the second one-way valve (734). The oil then flows out of the port and to the hydraulic rams either extending or retracting them.

Note: With the cutterbar springs locked, then the AUTO CONTOUR is out of operation.

https://truckmanualshub.com/

4.10 Uni-spreader drive

Solenoid valve (4/3 way) with lock valve (spare part no. 082 990.1)

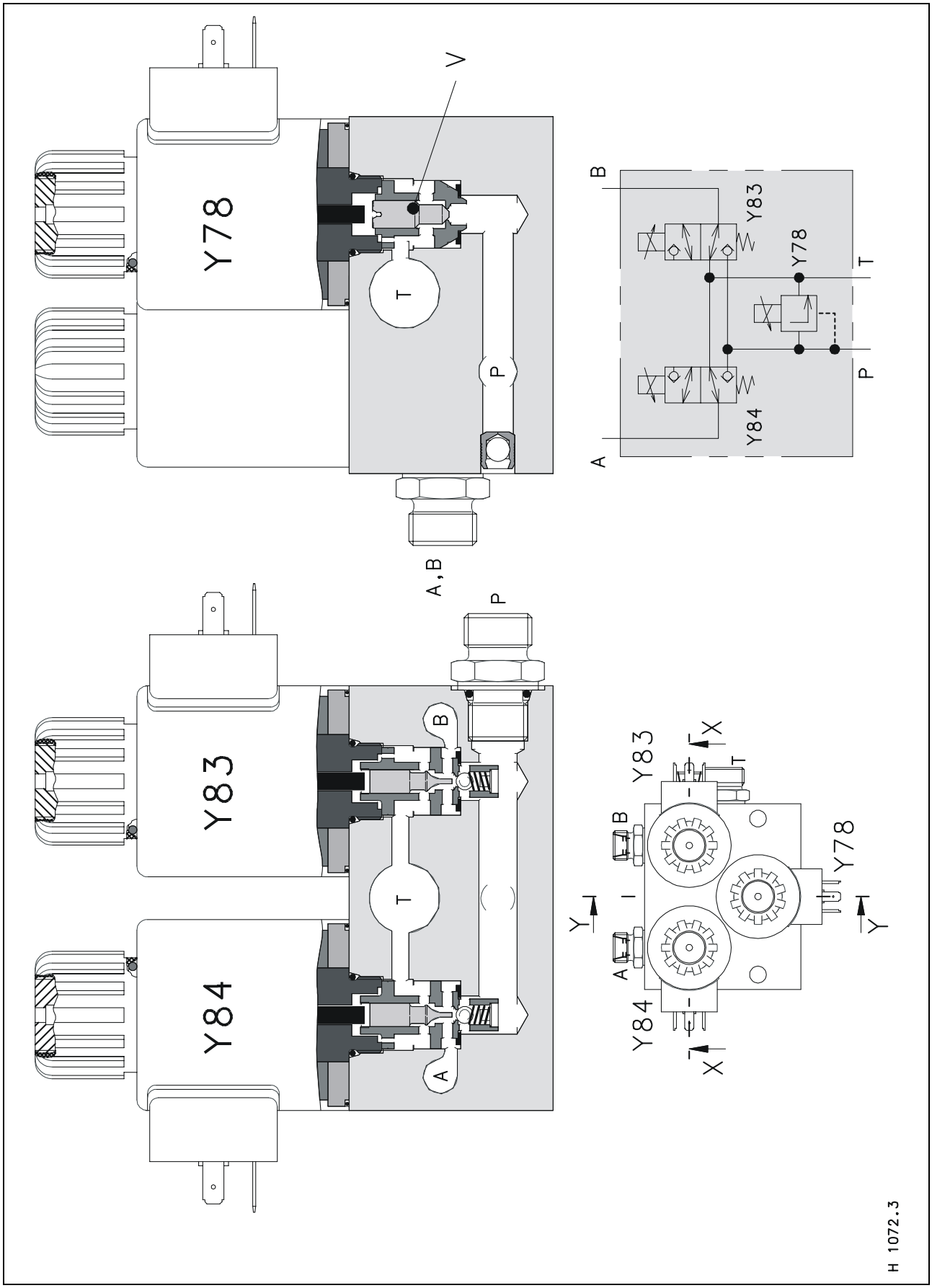

https://truckmanualshub.com/

Key to diagram

Y78 - Returns valve with pressure relief valve . . . . 60 bar
Y83 - Solenoid valve for swinging the Uni-spreader to the left
Y84 - Solenoid valve for swinging the Uni-spreader to the right

T - Connection to tank
P - Connection to the hydraulic pump
A - Hydraulic ram port for swinging the Uni-spreader to the right
B - Hydraulic ram port for swinging the Uni-spreader to the left
V - Valve insert for the lock valve

Function – neutral

When the threshing system is engaged the relative hydraulic pump for the Uni-spreader is also engaged. The oil flows through the open returns valve (Y78) and back to tank.
Both ends of the hydraulic ram are connected together through the non switched solenoids (Y83/Y84). The Uni-spreader can be operated by hand, and locked in the middle position.

Function – swinging

When required, one of the solenoid valves are operated (Y83/Y84) and at the same time the lock valve (Y78).
The relative spool, presses the ball off its seat and closes the flow back to tank.
Oil flows to the hydraulic ram from P. Oil returning from the ram comes in at the non switched solenoid (Y83/Y84) and returns to tank.

The lock valve is designed to allow flow when the hydraulic ram meets its end stops. This reduces pressure spikes and also constant pressure within the ram.
Because of the requirement of the valve inserts and the relatively large size of ball in the returns valve (Y78), it is not enough to rely on the electromagnetic force of the solenoid to maintain system pressure. For this reason the ball in the valve unit (Y78) will release oil at **55^{+5} bar**.

Note: Once the cutterbar has been engaged, the module swings the Uni-spreader completely to the right and then completely to the left, this enables the module to learn the end stops. The solenoid valves (Y83/Y84) will then be controlled by the module, with respect to the angle and degree of movement.

https://truckmanualshub.com/

Uni-spreader drive

Solenoid valve (4/3 way) with pressure relief valve and accumulator (spare part no. 631 417.1)

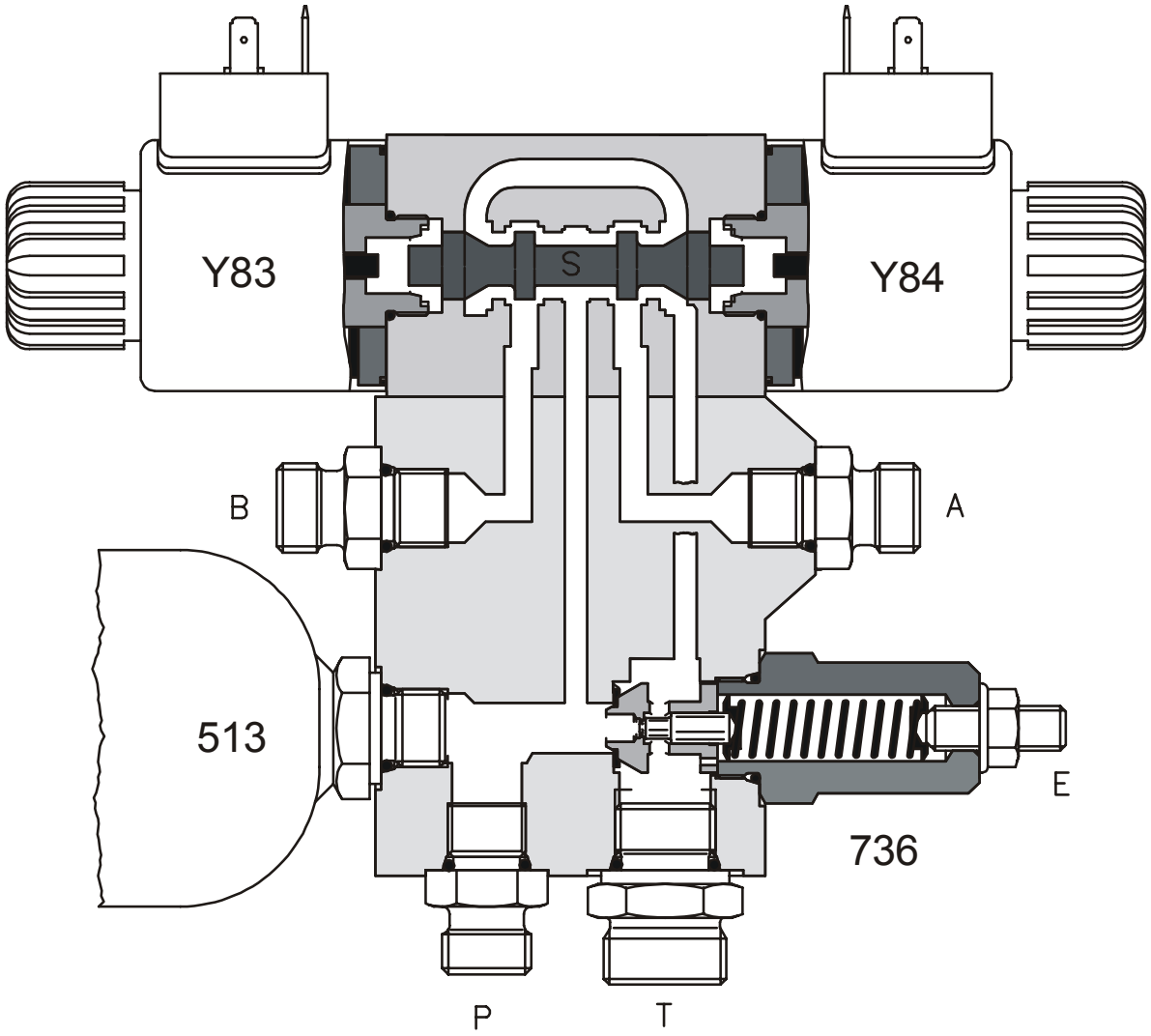

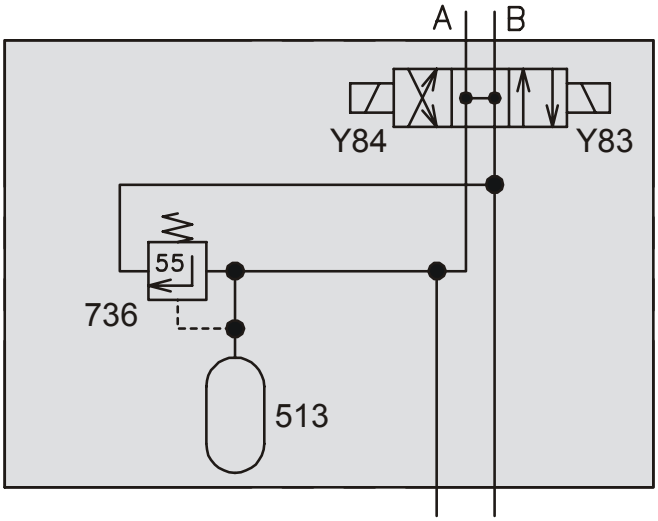

H 1022.5

https://truckmanualshub.com/

Key to diagram

513 - Accumulator . . . . . 0.075 l / 15 bar
736 - Pressure relief valve for Uni-spreader . . . . . 55^{+5} bar

Y83 - Solenoid valve for swinging the Uni-spreader to the left
Y84 - Solenoid valve for swinging the Uni-spreader to the right

T - Connection to tank
P - Connection to the hydraulic pump
A - Hydraulic ram port for swinging the Uni-spreader to the right
B - Hydraulic ram port for swinging the Uni-spreader to the left
E - Adjusting screw for pressure relief
S - Control spool

Function – neutral

When the threshing system is engaged the relative hydraulic pump for the Uni-spreader is also engaged. The oil then flows over the ring channel of the control spool (S) and back to tank.
Both ends of the hydraulic ram are connected together through the control spool (S). The Uni-spreader can be operated by hand, and locked in the middle position.

Function – swinging

When the system is energised, then the solenoid valve (Y83/Y84) is also switched. The control spool (S) then connects the P port to one side of the hydraulic ram, and the other side of the ram is connected to tank. The accelerator (D) stops any pressure peaks from within the system. The spring within the pressure relief valve is set to **55^{+5} bar**, and can be adjusted on the adjusting screw (E).

Note: Once the threshing has been engaged, the module swings the Uni-spreader completely to the right and then completely to the left, this enables the module to learn the end stops. The solenoid valves (Y83/Y84) will then be controlled by the module, with respect to the angle and degree of movement.

https://truckmanualshub.com/

Uni-spreader drive
Equal hydraulic ram

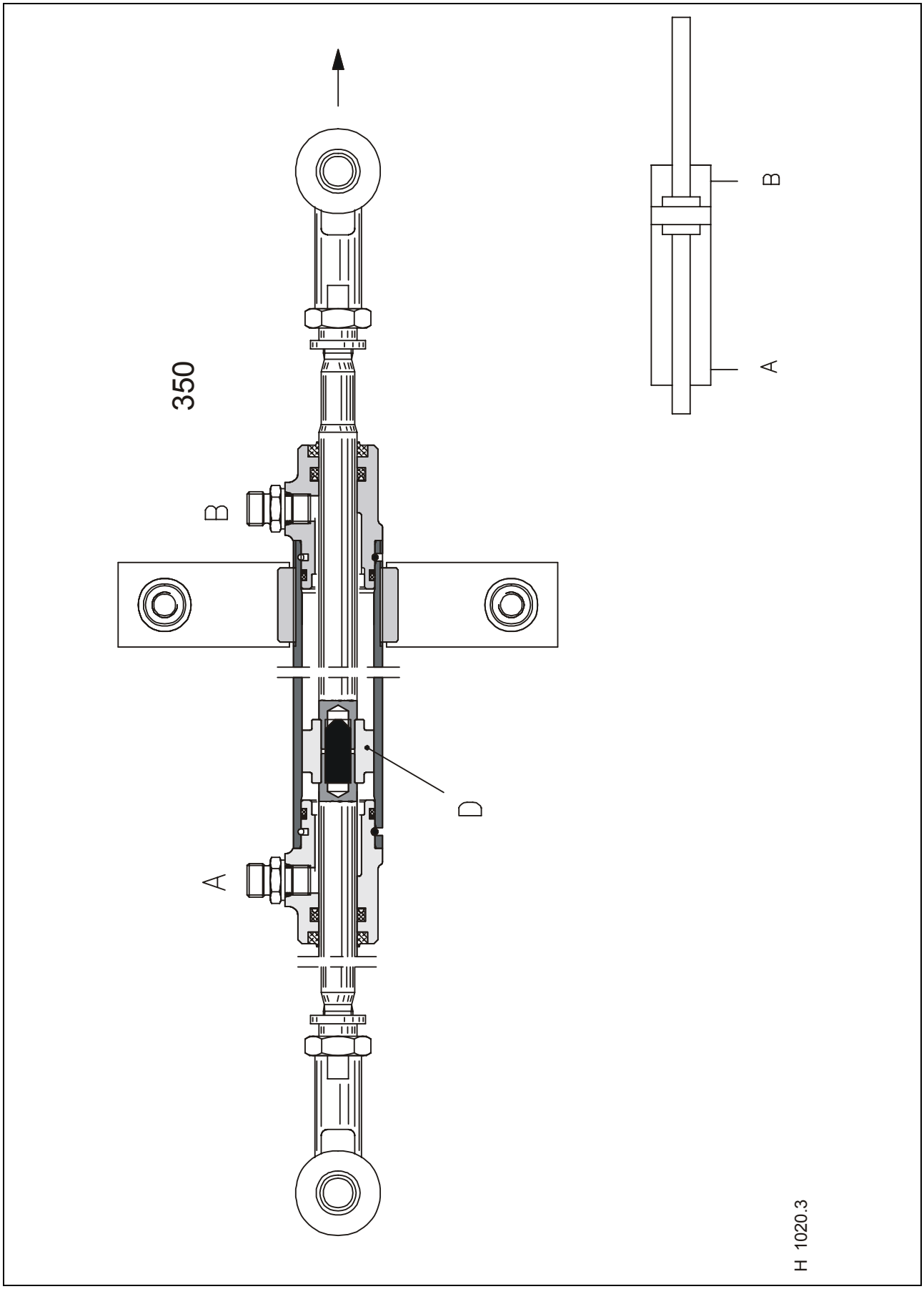

https://truckmanualshub.com/

Key to diagram

350 - Uni-spreader hydraulic ram . . . . . Ø 34/18 mm

A - Hydraulic ram port for swinging the Uni-spreader to the right
B - Hydraulic ram port for swinging the Uni-spreader to the left
D - Piston with end damping

Note: The two piston rods are connected using a threaded pin. The piston with end damping is inserted without seals.

https://truckmanualshub.com/

4.11 Straw / chaff spreader drive

Flow control valve with pressure relief valve

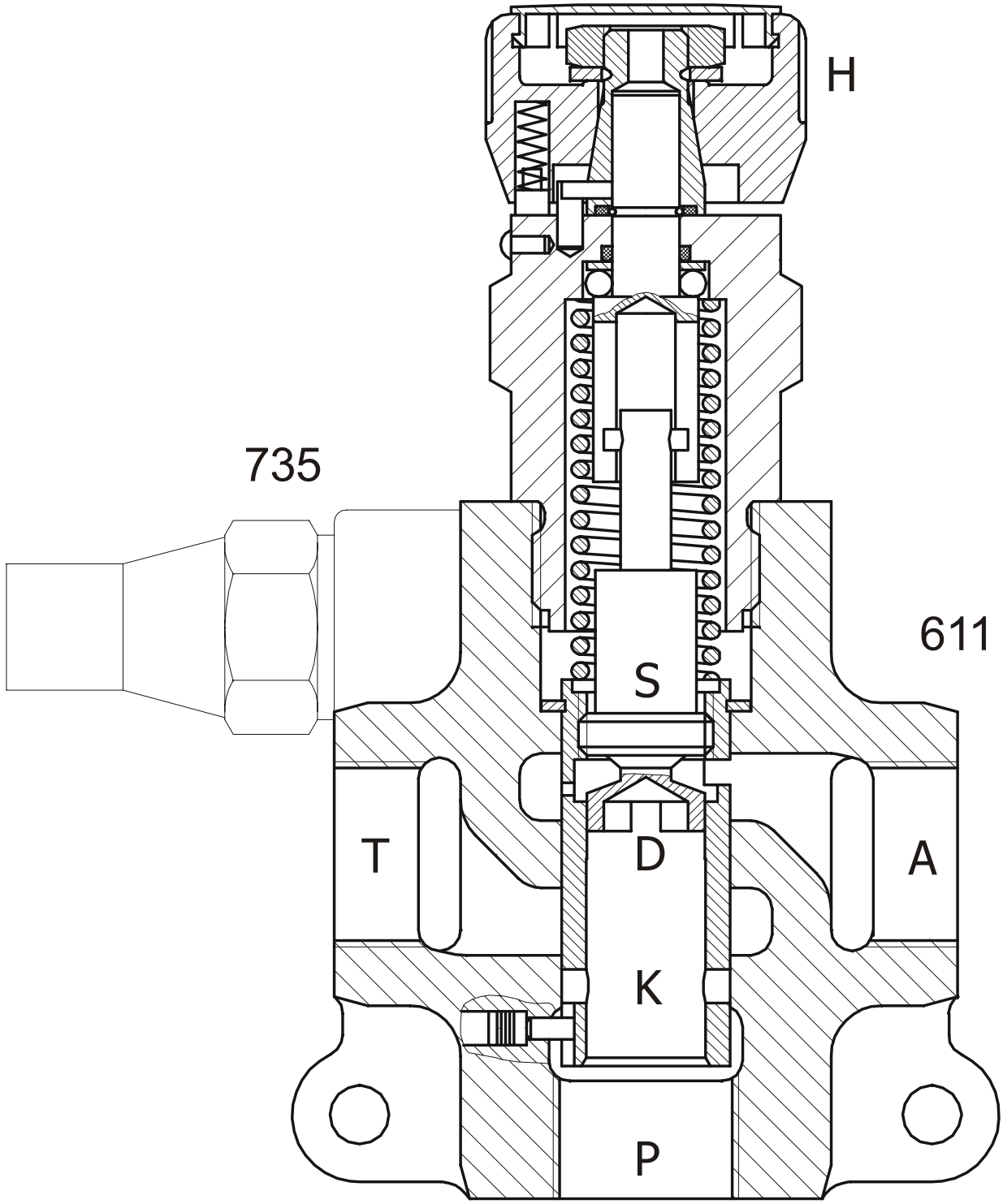

H 1100.1

https://truckmanualshub.com/

Key to diagram

611 - Flow control valve for straw / chaff spreader . 8 – 19 l/min.
735 - Pressure relief valve for chaff spreader . . . . . 150 bar

T - Connection to tank
P - Connection to the hydraulic pump
A - Straw / chaff spreader hydraulic motor port

D - Restrictor
H - Hand wheel
K - Regulation spool
S - Spool

Function

The flow control valve (611) redistricts the oil flow from the pump (P) to the port A and can be adjusted by the hand wheel (H) to give a flow between **8 - 19 l/min**.
The pressure relief valve (735) switches at a system pressure of **150 bar**.

The hand wheel (H) turns the spool (S), which turns the regulating spool (K) and therefore turn the radial into an axial movement. The restrictor (D) on the control corner either opens or closes. The narrowing or widening of the cross section in the restrictor (D) regulates the flow out of the ports (A).

The oil flow from the pump (P) flows through the regulation spool (K), over the cross section of the restrictor (D) to the port (A). There is pressure from the restrictor (D) and presses against the spring pressure of the regulating spool (K), and part of the flow is returned to tank (T). The quantity of oil is dependant on the back pressure from the restrictor spool (D) so that a constant oil flow is supplied to the port (A).

https://truckmanualshub.com/

4.12 Grain tank unloading aid

Solenoid valve (4/3 way) with lock-up valve unit

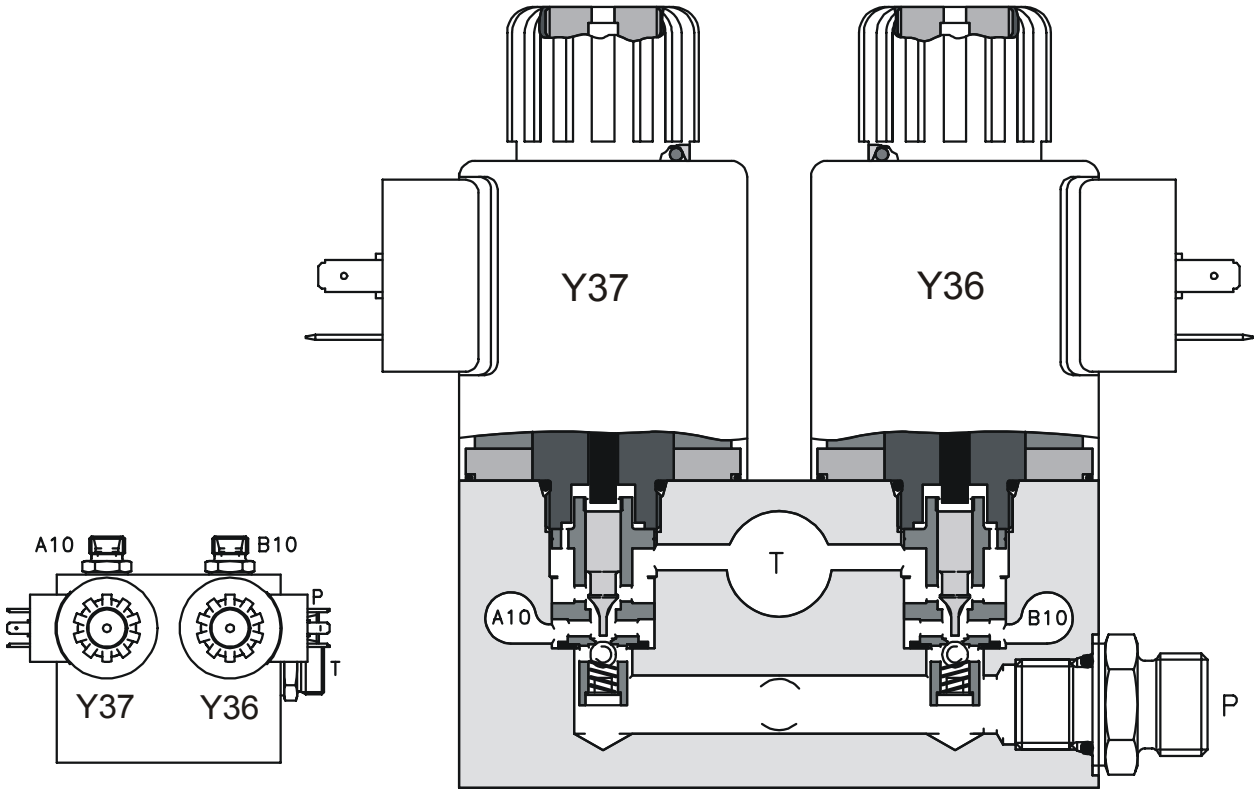

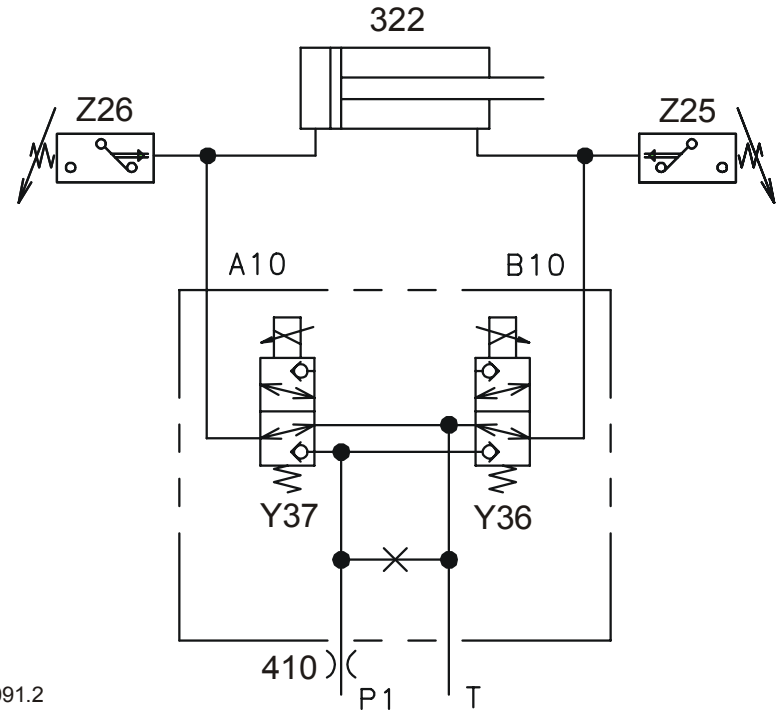

H 1091.2

https://truckmanualshub.com/

Key to diagram

322	- Hydraulic ram for grain tank unloading aid . . . Ø 40 mm
410	- Restrictor . . . . . Ø 1.5 mm
Y36	- Solenoid valve for moving grain tank unloading aid forward
Y37	- Solenoid valve for moving grain tank unloading aid backward
Z25	- Oil pressure switch . . . . . 120 bar
Z26	- Oil pressure switch . . . . . 80 bar
T	- Connection to tank
P1	- Pump connection via returns valve
A10	- Hydraulic ram port for moving grain tank unloading aid backward
B10	- Hydraulic ram port for moving grain tank unloading aid forward
V	- Valve insert
K	- Plunger

Function – neutral

Both side of the hydraulic ram are connected over the valve inserts and the non switched solenoid valves (Y36/Y37), and so that when the unloading aid is switched off it can be operated by hand.

Function

When required, the relevant solenoid valve is operated (Y36/Y37). The switched spool pushes the ball off its seat and closes the flow to tank. The flow then flows out to the ram (322) through the solenoid that is operated, and the return oil is delivered back via the solenoid (Y36/Y37) that is not operated and then back to tank.

The oil pressure switches (Z25/Z26) automatically switch when the hydraulic ram (322) reaches its end stop.

https://truckmanualshub.com/

4.13 Front attachment dampening
Solenoid valve (2/2 way)

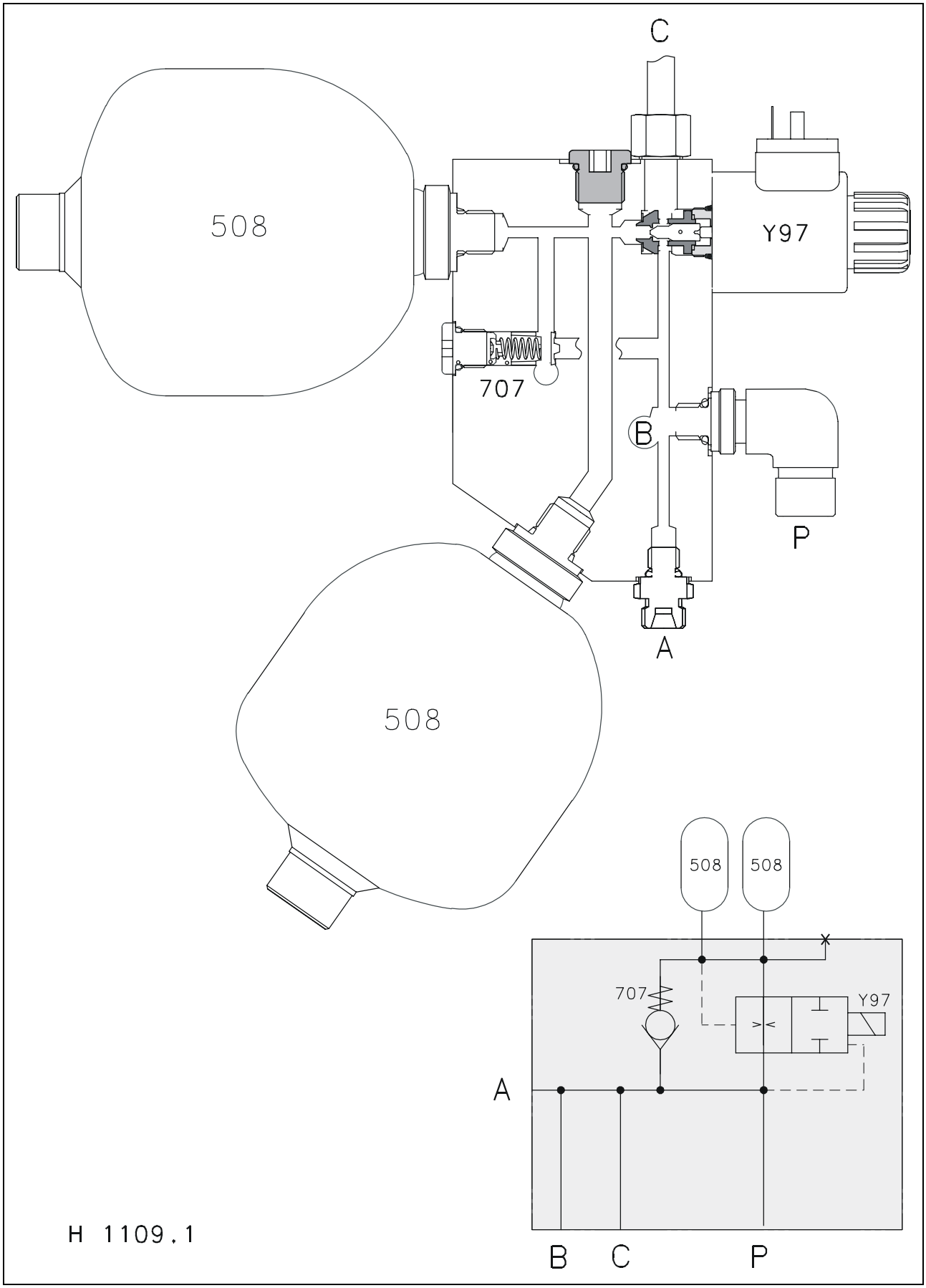

https://truckmanualshub.com/

Key to diagram

508 - Accumulators . . . . . 0.6 l
707 - Pressure holding valve (one-way valve)

Y97 - Solenoid valve for front attachment dampening

A - Consumer port
B - Consumer port
C - Consumer port
P - Pump port

Function

With the solenoid valve Y97 inactivated, cutterbar damping is active, i.e. pressure peaks are absorbed by the accumulators 508.

With the threshing mechanism and cutterbar engaged, at full throttle and when reaching the work position, cutterbar dampening is blocked by solenoid valve Y 97. This is the only way to guarantee reliable CAC function.

https://truckmanualshub.com/

4.14 Reel speed control (hydraulic)
Solenoid valve (4/3 way)

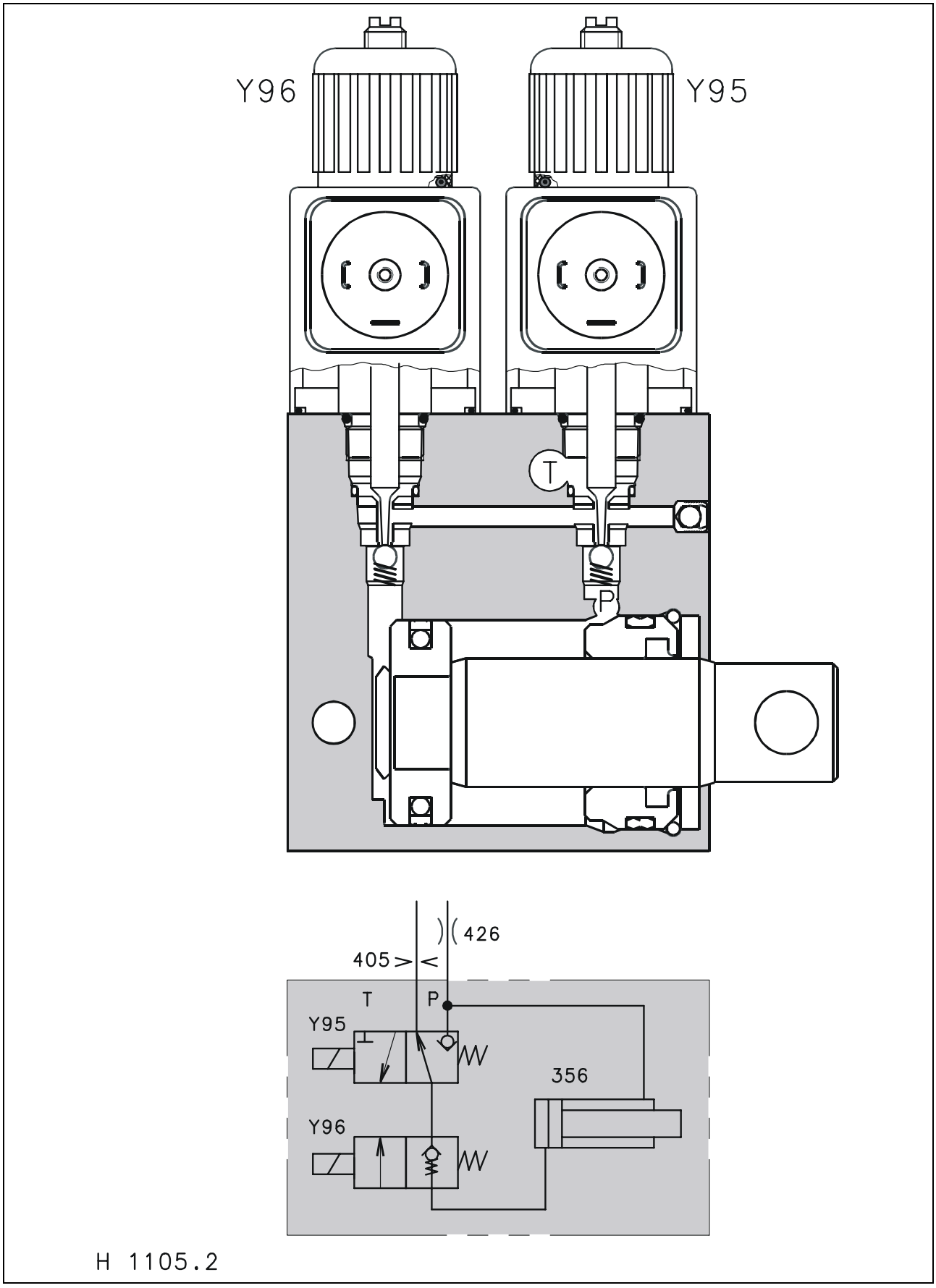

https://truckmanualshub.com/

Key to diagram

356	- Reel drive control variable displacement pump
405	- Orifice plate . . . . . 0.6 mm
426	- Restrictor . . . . . 0.8 mm
Y95	- Solenoid valve for speeding up reel speed
Y96	- Solenoid valve for slowing down reel speed
A	- Consumer port
P	- Pump port
T	- Tank port

https://truckmanualshub.com/

4.15 Track tension

Distributor with valve block, filler and safety function

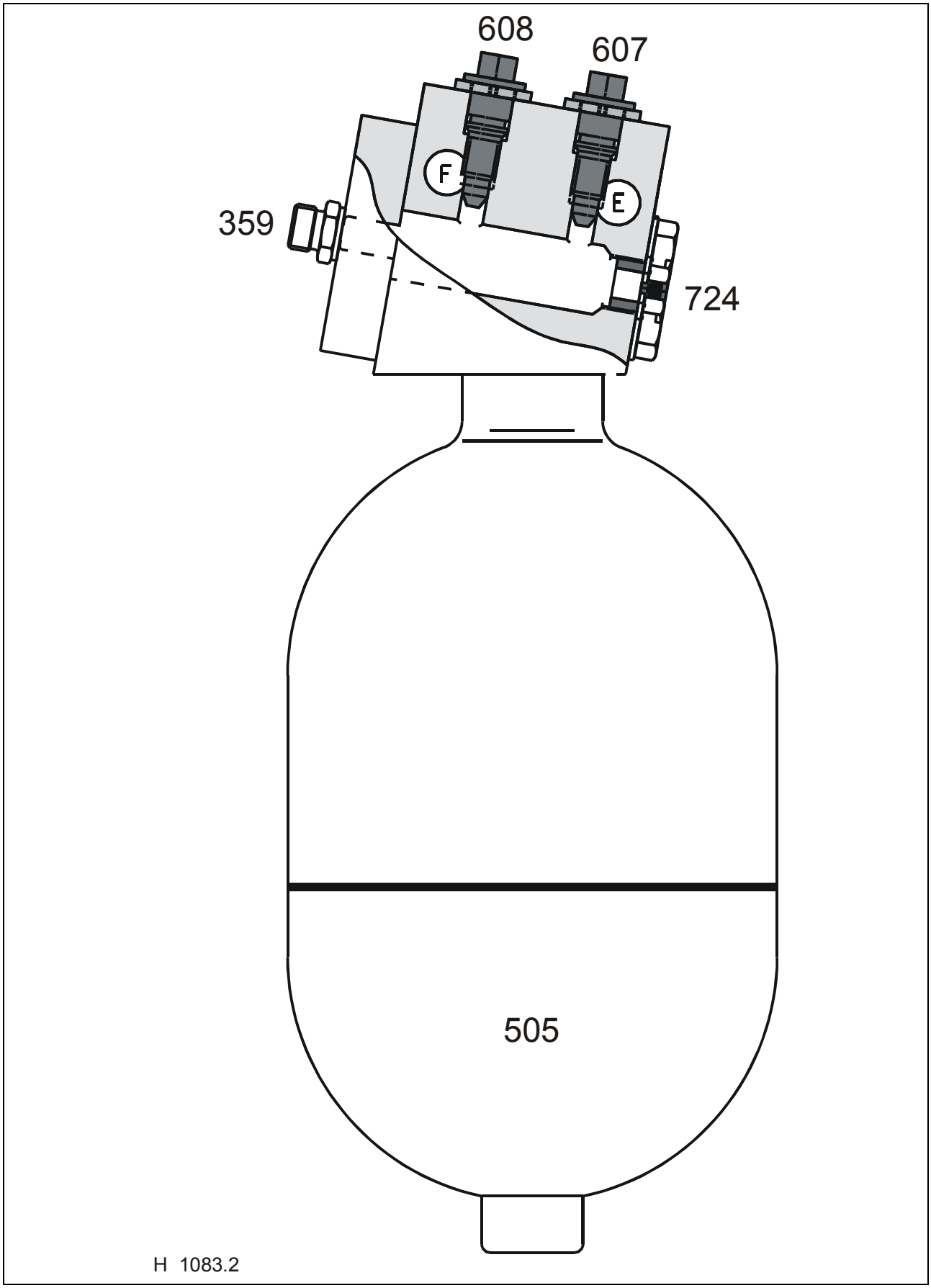

https://truckmanualshub.com/

Key to diagram

359	- Hydraulic ram for belt tension
505	- Accumulator . . . . . 3.5 l / 100 bar
607	- Bleeding valve
608	- Filling valve
724	- Safety valve (burst plate)
E	- Bleeding connection
F	- Connection to filling pipe

Filling instructions

1. Connect the filling line to the quick release coupling that is installed parallel to the hydraulic ram of the drum variator.
2. Connect the other end of the filling line to the filling screw (F) that is situated on the valve block of the track.
3. Unscrew the bleeding valve (607) about ¼ to ½ turn and lead the drain into a suitable container.
4. Start the engine and then the threshing system.
5. Increase the speed of the threshing drum, which will in turn slowly open the filling valve (608), until the oil flows freely without air out of the bleeding valve (607).
6. Close the bleeding valve (607)
7. Increase the speed of the threshing drum for **about** another **50 sec**. The pressure on the gauge of the filling line should be **about 150 bar**.
8. Close the filling valve (608)
9. Stop the engine and remove the filling line.

Safety function

Should the tracks of the machine be overloaded with a mechanical loading, then a burst plate (724) mounted on the valve block will blow and act as a safety valve. When the overload occurs, then the high pressure will break the burst plate (724) and the oil will escape. Should this happen, then the burst plate (724) must be replaced.

https://truckmanualshub.com/

Contents

Working hydraulics –

Front attachment

5.1 Circuit diagram for standard cutterbar 5-2

5.2 Circuit diagram for Vario cutterbar 5-4

5.3 Circuit diagram for the folding cutterbar 5-6
Function 5-7

5.4 Circuit diagram for the knife drive - rape 5-8

5.5 Circuit diagram for the maize picker 5-10
MULTIMASTER 5-10
CONSPEED 5-12

5.6 Layout of the components 5-14

5.7 Reel raise and lower adjustment 5-18
Solenoid valve for standard cutterbar 5-18
Function 5-19
Solenoid valve for folding cutterbar 5-20
Function 5-21
Hydraulic ram 5-22

5.8 Reel fore and aft 5-24
Solenoid valve 5-24
Function 5-25
Hydraulic ram 5-26

5.9 Table adjustment, Vario cutterbars 5-28
Solenoid valve 5-28
Function 5-29

5.10 Cutterbar folding function 5-30
Solenoid valve 5-30
Function 5-31
Hydraulic ram 5-32

5.11 Knife drive 5-34
Solenoid valve for standard cutterbar 5-34
Function 5-35
Solenoid valve for Vario cutterbar 5-36
Function 5-37

5.12 Maize picker 5-38
Solenoid valve 5-38
Function 5-39

https://truckmanualshub.com/

5.1 Circuit diagram for standard cutterbar

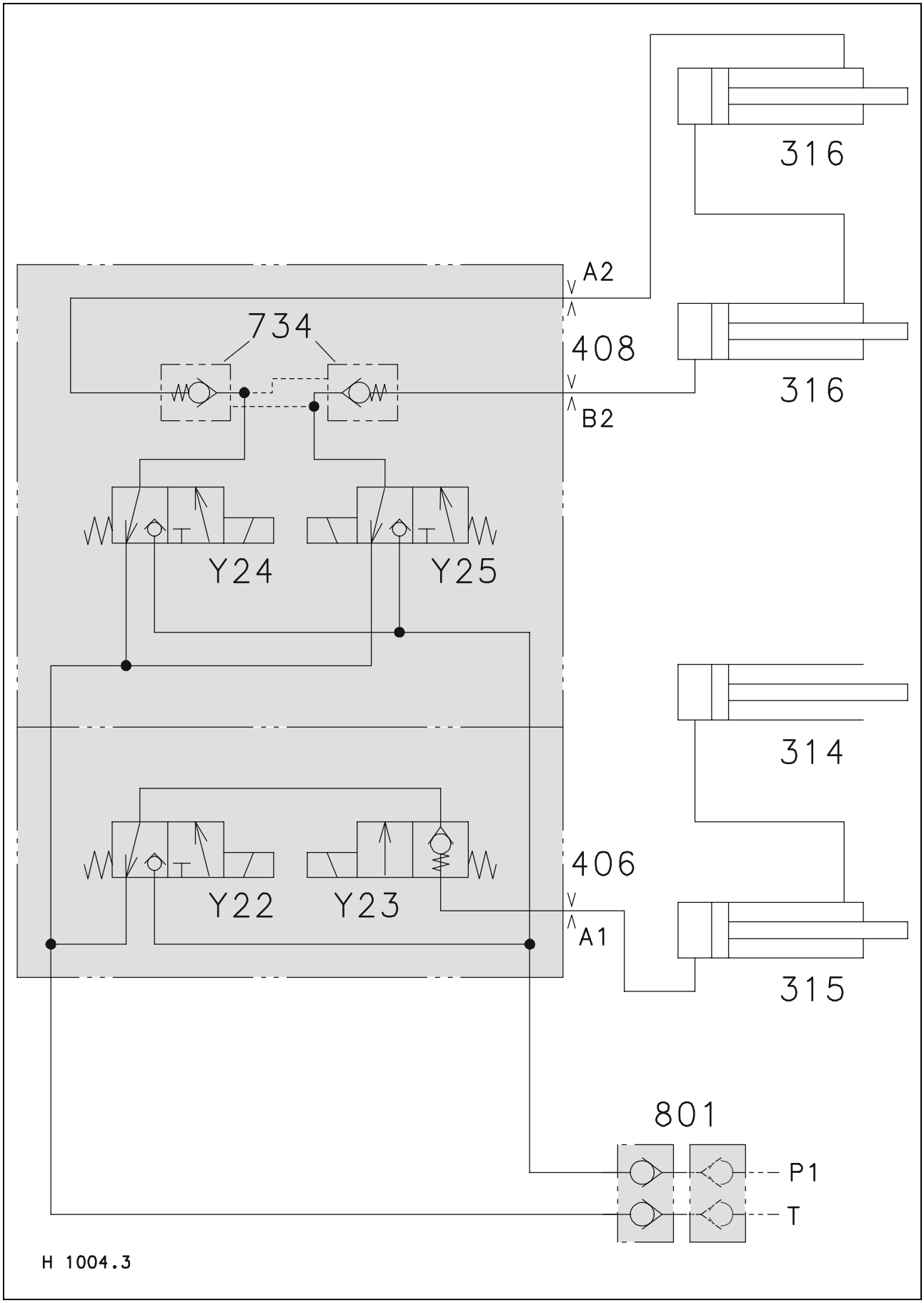

https://truckmanualshub.com/

Key to diagram

314	- Slave cylinder for reel height adjustment
315	- Master cylinder for reel height adjustment
316	- Hydraulic ram for reel fore and aft adjustment
406	- Orifice plate . . . . . Ø 0.8 mm
408	- Orifice plate . . . . . Ø 1.2 mm
734	- One-way valve (lock-up valve unit)
801	- Quick release coupling (P/T) for front attachment
Y22	- Solenoid valve for raising the reel
Y23	- Solenoid valve for lowering the reel
Y24	- Solenoid valve for reel forward
Y25	- Solenoid valve for reel backward
T	- Connection to tank
P1	- Parallel connection to valves from the returns valve
A1	- Hydraulic ram port for reel height adjustment
A2	- Hydraulic ram port for reel fore and aft adjustment, backwards
B2	- Hydraulic ram port for reel fore and aft adjustment, forwards

Note: Description and information on the operation of the pressure relief valve and the returns valve can be found in chapter 3.

https://truckmanualshub.com/

5.2 Circuit diagram for Vario cutterbar

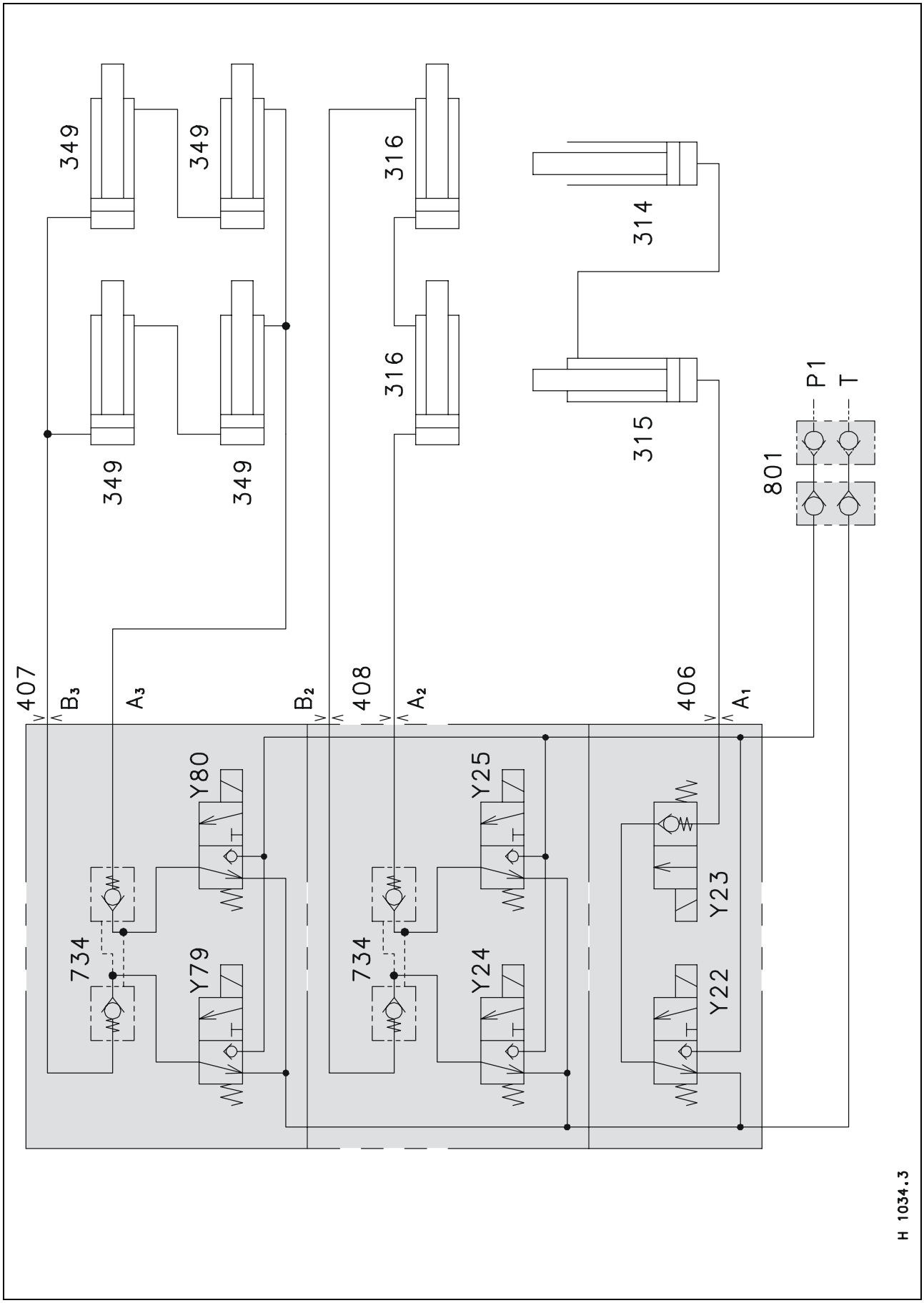

https://truckmanualshub.com/

Key to diagram

314	- Slave cylinder for reel height adjustment
315	- Master cylinder for reel height adjustment
316	- Hydraulic ram for reel fore and aft adjustment
349	- Hydraulic ram for table adjustment
406	- Orifice plate . . . . . Ø 0.8 mm
407	- Orifice plate . . . . . Ø 1.0 mm
408	- Orifice plate . . . . . Ø 1.2 mm
734	- One-way valve (lock-up valve unit)
801	- Quick release coupling (P/T) for front attachment
Y22	- Solenoid valve for raising the reel
Y23	- Solenoid valve for lowering the reel
Y24	- Solenoid valve for reel forward
Y25	- Solenoid valve for reel backward
Y79	- Solenoid valve for table forward
Y80	- Solenoid valve for table backward
T	- Connection to tank
P1	- Pump connection via the returns valve
A1	- Hydraulic ram port for reel height adjustment
A2	- Hydraulic ram port for reel fore and aft adjustment, backwards
B2	- Hydraulic ram port for reel fore and aft adjustment, forwards
A3	- Hydraulic ram port for table adjustment . . . . Ø 40/20 mm
B3	- Hydraulic ram port for table adjustment . . . . Ø 45/20 mm

Note: Description and information on the operation of the pressure relief valve and the returns valve can be found in chapter 3.

https://truckmanualshub.com/

5.3 Circuit diagram for the folding cutterbar

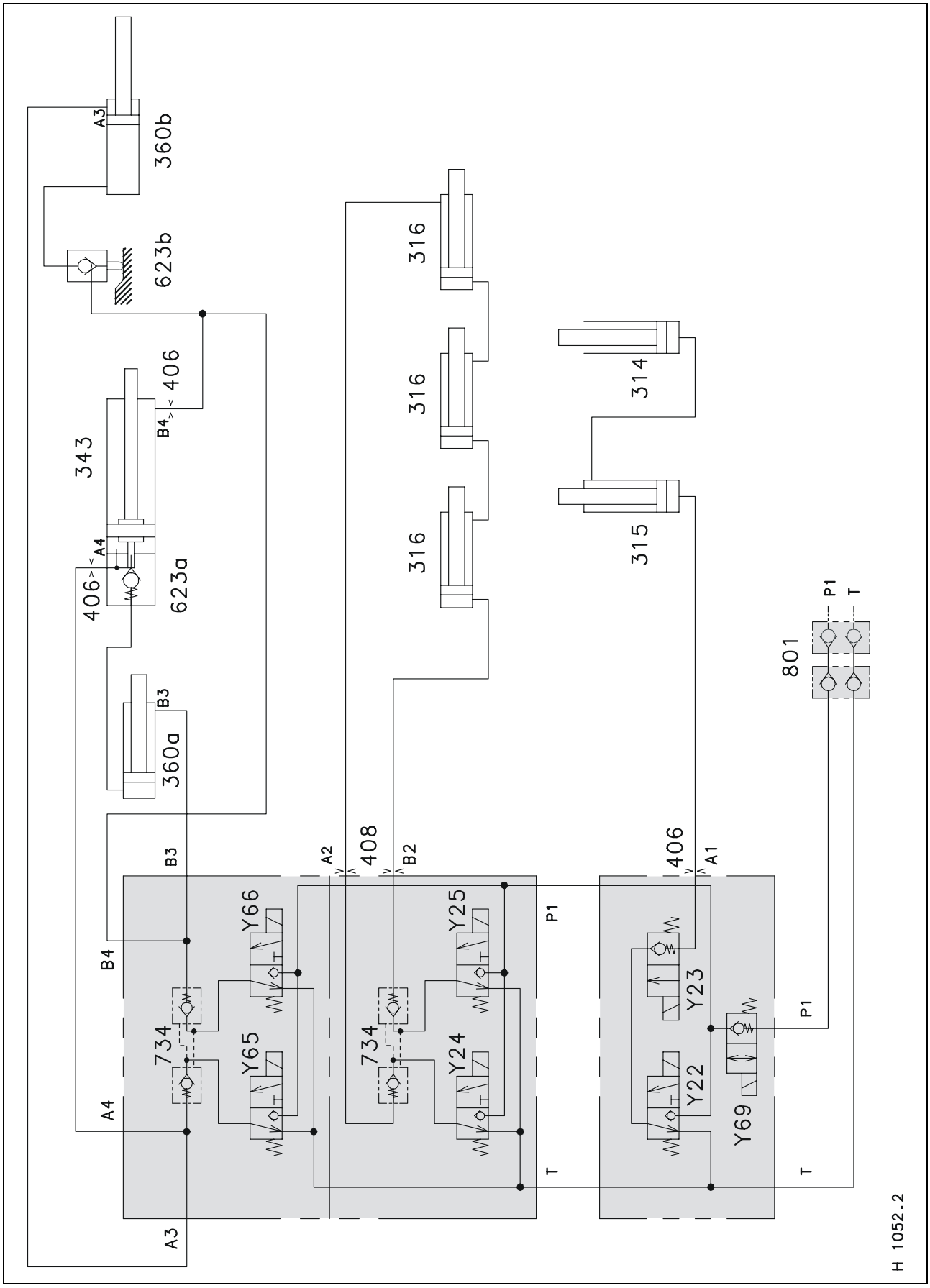

https://truckmanualshub.com/

Key to diagram

314 - Slave cylinder for reel height adjustment
315 - Master cylinder for reel height adjustment
316 - Hydraulic ram for reel fore and aft adjustment
343 - Hydraulic ram for folding the cutterbar
360(a) - Hydraulic ram for locking into the transport position
360(b) - Hydraulic ram for locking in work position
406 - Orifice plate . . . . . Ø 0.8 mm
408 - Orifice plate . . . . . Ø 1.2 mm
623(a) - One-way valve (pilot operated)
623(b) - One-way valve (pilot operated)
734 - One-way valve (lock-up valve unit)
801 - Quick release coupling (P/T) for front attachment

Y22 - Solenoid valve for raising the reel
Y23 - Solenoid valve for lowering the reel
Y24 - Solenoid valve for reel forward
Y25 - Solenoid valve for reel backward
Y65 - Solenoid valve for folding the cutterbar to work position
Y66 - Solenoid valve for folding the cutterbar to transport position
Y69 - Solenoid valve for lock valve

T - Connection to tank
P1 - Pump connection via the returns valve
A1 - Hydraulic ram port for reel height adjustment
A2 - Hydraulic ram port for reel fore and aft adjustment, backwards
B2 - Hydraulic ram port for reel fore and aft adjustment, forwards
A3 - Hydraulic ram port for table adjustment
B3 - Hydraulic ram port for table adjustment
A4 - Hydraulic ram port for folding the cutterbar to work position
B4 - Hydraulic ram port for folding the cutterbar to transport position

Folding function

For unfolding and folding of the cutterbar, the hydraulic rams (360a/b) are operated first in order to unlock the system. This is able to be done, as this requires less pressure to operate, than it does to operate the folding hydraulic rams (343).

During the folding process is carried out at a later stage with the hydraulic rams (360a/b) that is when pressure is available, but not yet as the piston rod end is blocked by the corresponding one-way valve (623a/b).
These one-way valves stay closed until either the folding ram (623a) reaches the end stop or the frame (623b) is completely home, so will only lock in the completely unfolded or folded condition.
The one-way valve (Y69) stops the oil flow to the cutterbar when the road travel switch has been locked.

A screw on the one way valve (623b) can adjust the time of regulation into the working position.

Note: The circuit diagram shows the position of the hydraulic rams for the locking to the transport position.

https://truckmanualshub.com/

5.4 Circuit diagram for the knife drive - rape

Standard and folding cutterbars

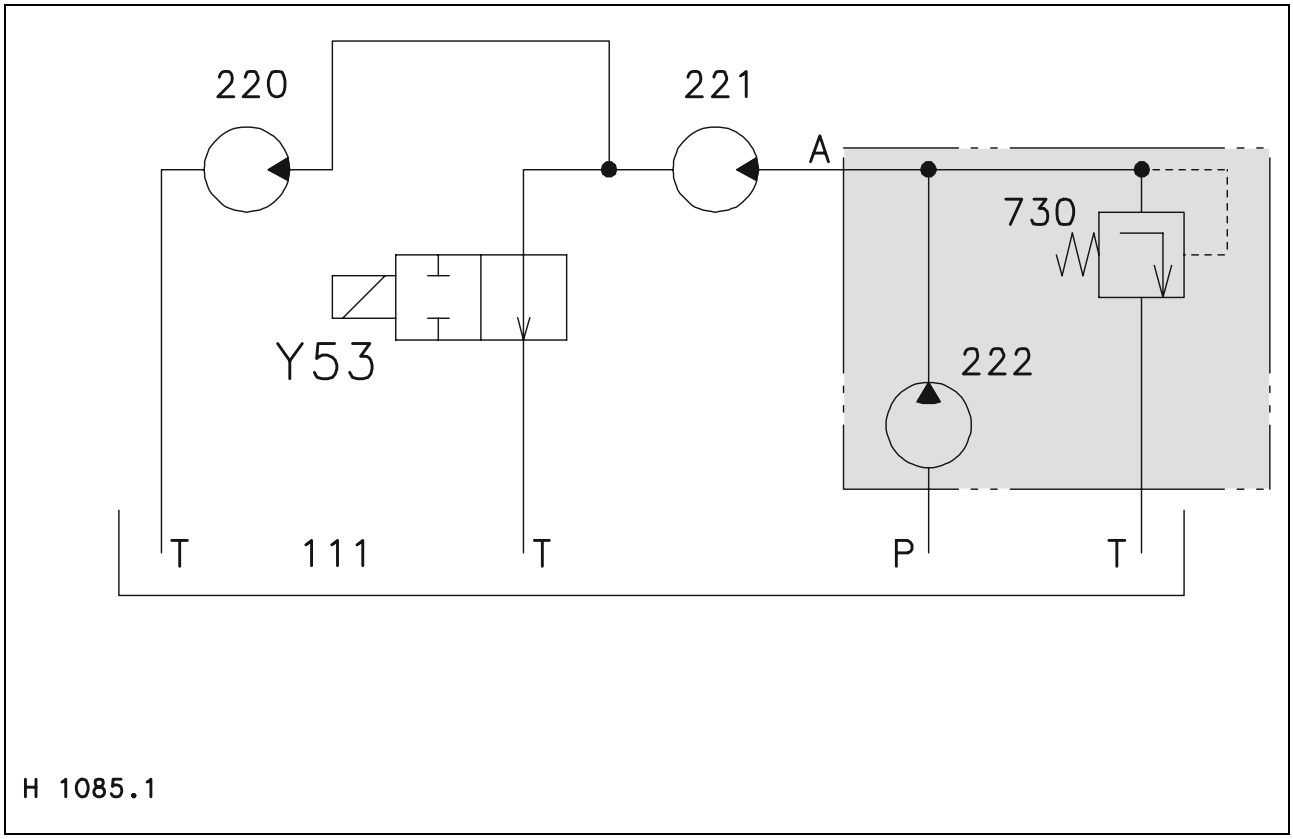

VARIO cutterbar

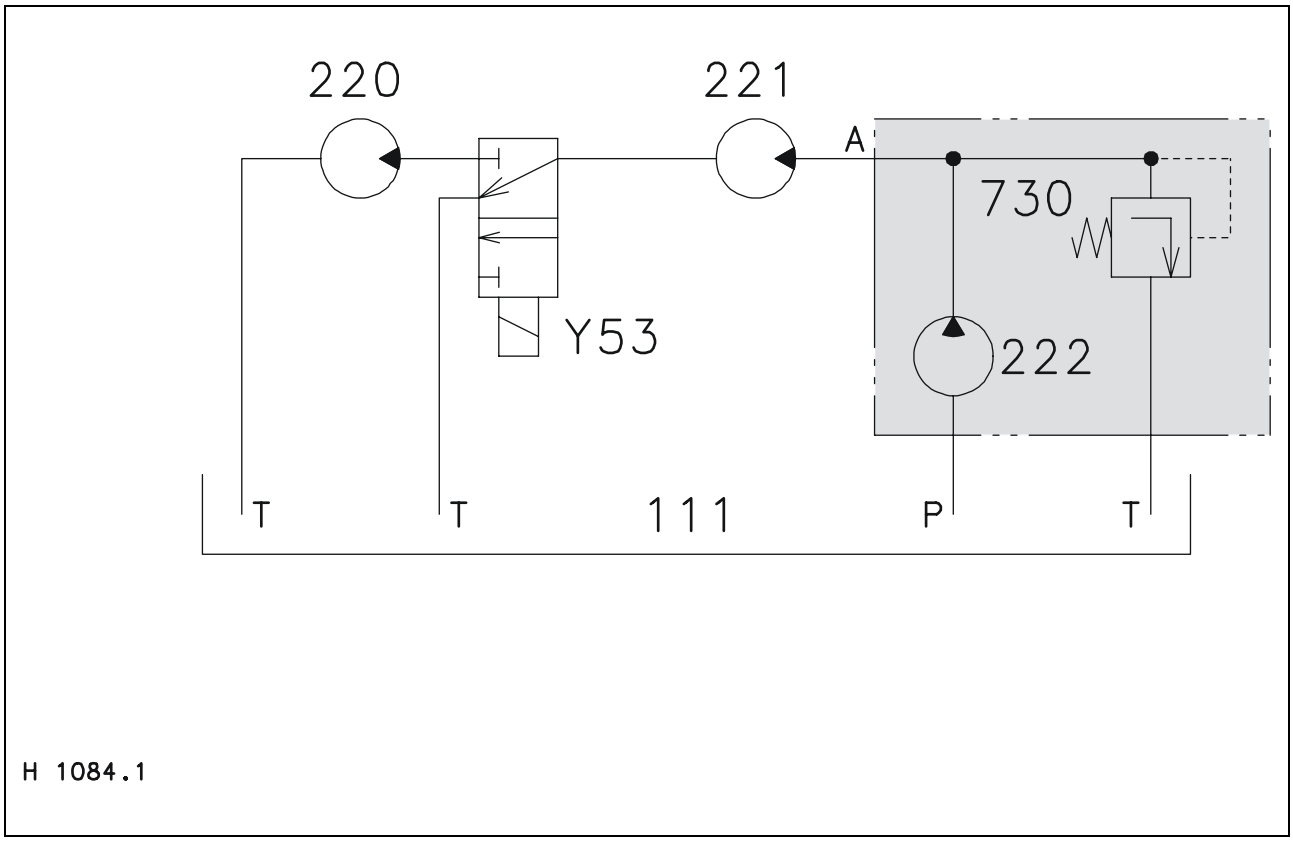

https://truckmanualshub.com/

Key to diagram

111	- Oil tank	2.0 litres
	with VARIO cutterbar	1.8 litres
221	- Hydraulic motor for right-hand knife drive	OMM 20
220	- Hydraulic motor for left-hand knife drive	OMM 20
222	- Hydraulic pump	9 cm³
	with VARIO cutterbar	14 cm³
730	- Pressure relief valve	180 bar
Y53	- Solenoid valve for left-hand knife disengagement	
T	- Connection to tank	
P	- Connection to hydraulic pump	
A	- Knife drive hydraulic motor port	

https://truckmanualshub.com/

5.5 Circuit diagram for the maize picker - MULTIMASTER

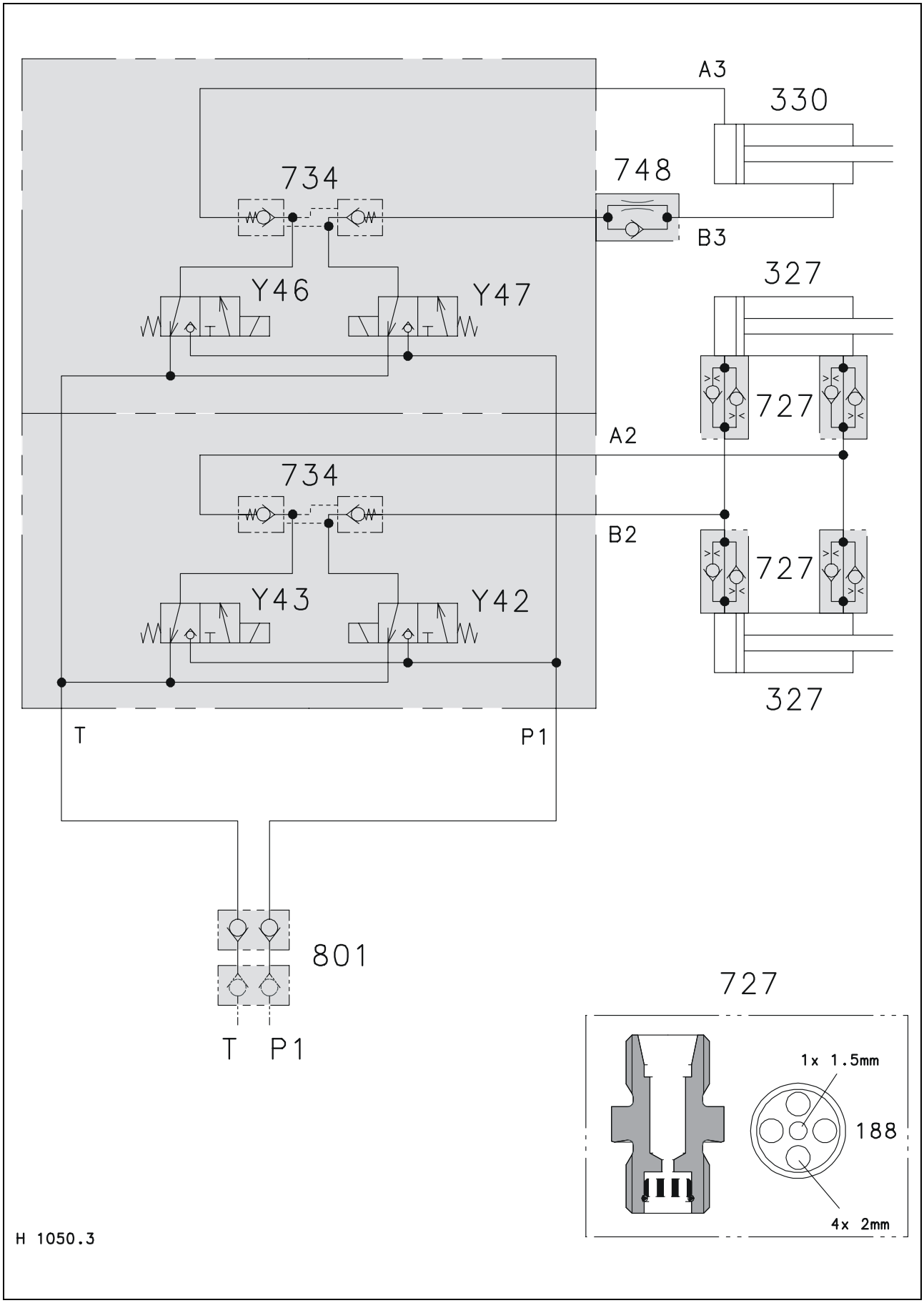

https://truckmanualshub.com/

Key to diagram

327	- Hydraulic ram for folding the maize picker
330	- Hydraulic ram for adjusting the snap plates
727	- Return flow restrictor . . . . . Ø 1.5+4x2 mm
734	- One-way valve (lock-up valve unit)
748	- One-way restrictor
801	- Quick release connector (P/T) for front attachment
Y42	- Solenoid valve for folding out the maize picker (work position)
Y43	- Solenoid valve for folding in the maize picker (transport position)
Y46	- Solenoid valve for closing the snap plates
Y47	- Solenoid valve for opening the snap plates
T	- Connection to tank
P1	- Pump connection via the returns valve
A2	- Hydraulic ram port for folding in the maize picker
B2	- Hydraulic ram port for folding out the maize picker
A3	- Hydraulic ram port for narrowing the snap plates (close)
B3	- Hydraulic ram port for widening the snap plates (open)

Note: When folding in, because of the weight of the maize picker on the hydraulic ram, the bores (4x2 mm) in the return flow restrictor (727) are closed. The oil must flow through the middle hole (1x1.5 mm) which will reduce the flow rate and therefore the speed drops, too. The snap plates, folded over the dead centre, are then braked and damped.
The return flow restrictor (727) is fitted to both sides of the hydraulic rams in the connection unions.

Note: Description and information on the operation of the pressure relief valve and the returns valve can be found in chapter 3.

https://truckmanualshub.com/

Circuit diagram for the maize picker - Conspeed

Conspeed – 8 row

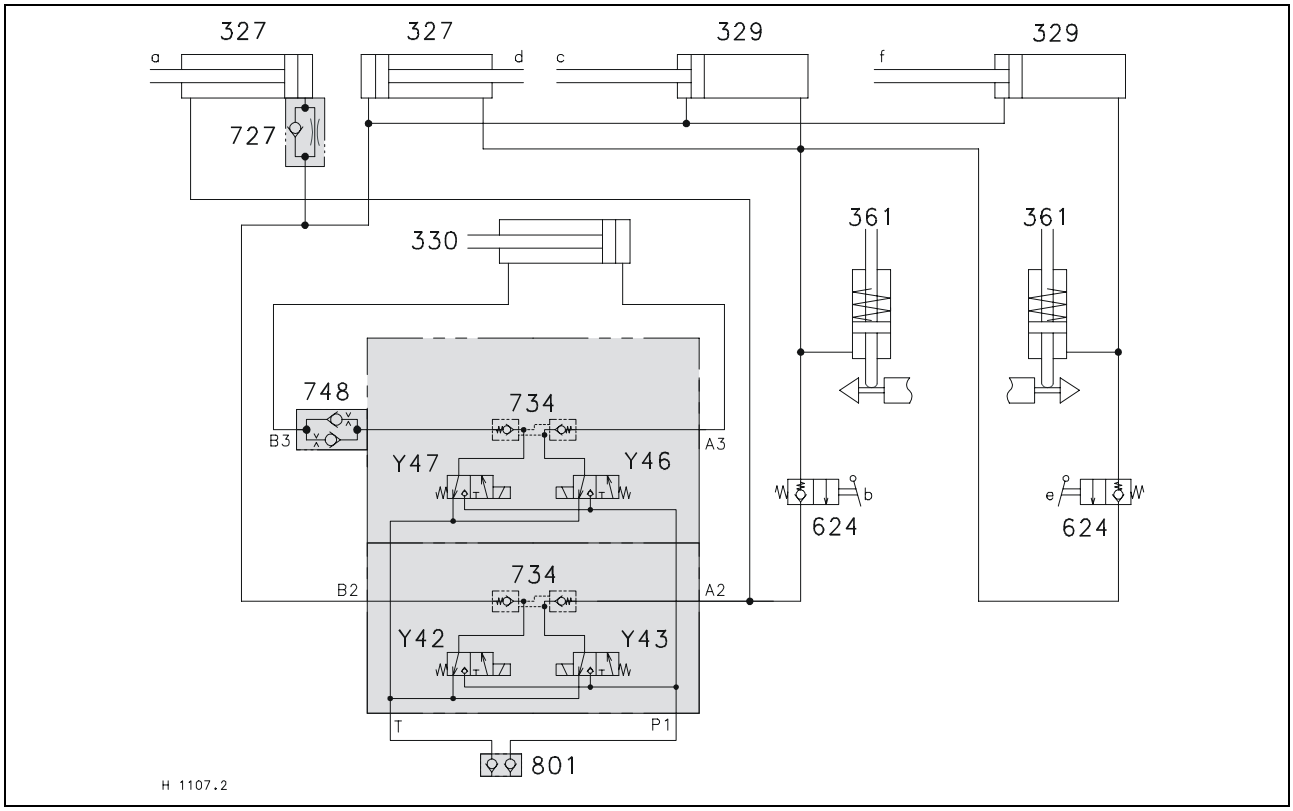

Conspeed – 6 row

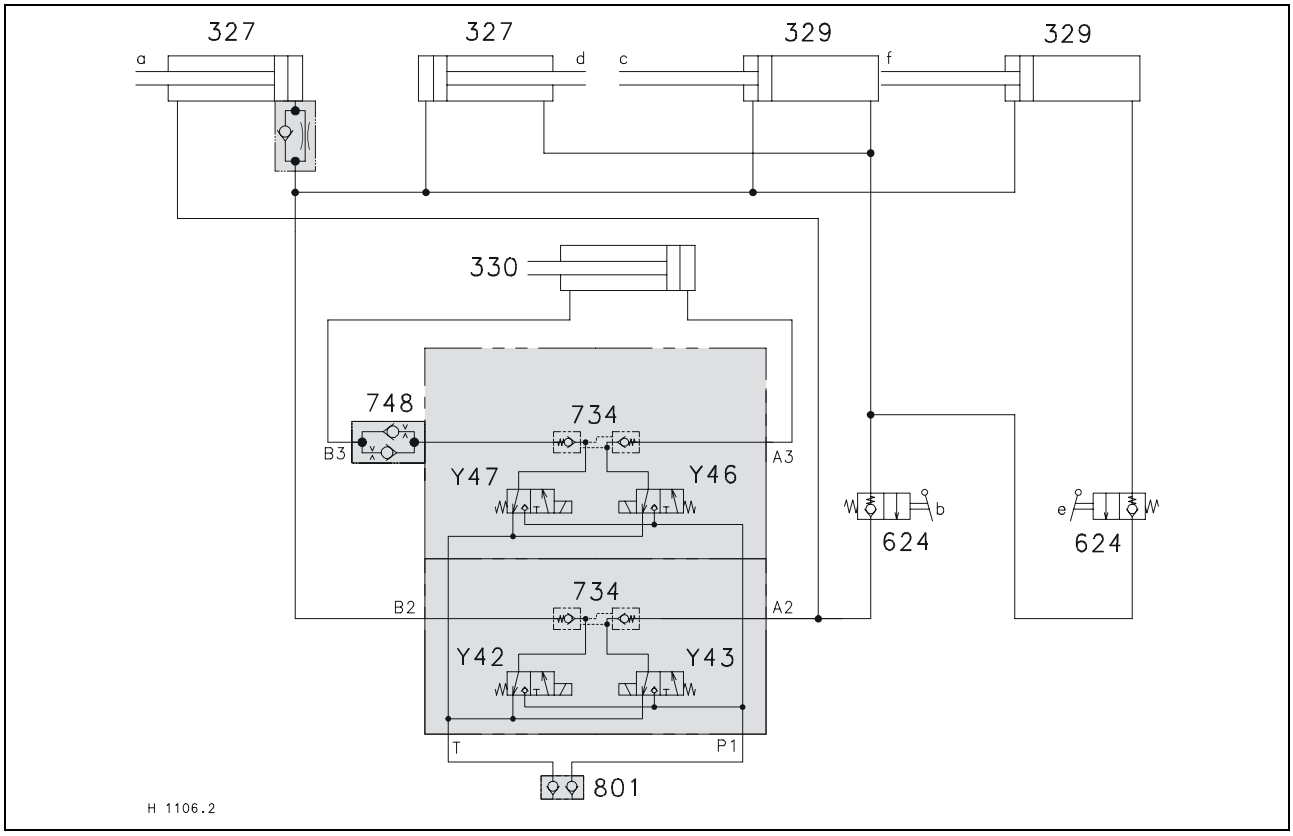

https://truckmanualshub.com/

Key to diagram

327	- Hydraulic ram for folding the maize picker
329	- Hydraulic ram, folding cover
330	- Hydraulic ram for adjusting the snap plates
361	- Hydraulic ram for maize picker locking
624	- Lock valve, folding cover
727	- Return flow restrictor . . . . . Ø 1.5+4x2 mm
734	- One-way valve (lock-up valve unit)
748	- Restricted one-way valve
801	- Quick release connector (P/T) for front attachment
Y42	- Solenoid valve for folding out the maize picker (work position)
Y43	- Solenoid valve for folding in the maize picker (transport position)
Y46	- Solenoid valve for closing the snap plates
Y47	- Solenoid valve for opening the snap plates
T	- Connection to tank
P1	- Parallel connection to valves from the returns valve
A2	- Hydraulic ram port for folding in the maize picker
B2	- Hydraulic ram port for folding out the maize picker
A3	- Hydraulic ram port for narrowing the snap plates (close)
B3	- Hydraulic ram port for widening the snap plates (open)

Folding function

When folding into the transport position, the covers on the separators are raised by the hydraulic ram (329) until the pressure in the system rises enough that the hydraulic rams (327) for the side sections raise. When folding into the work position, the covers on the separators can be lowered first, when the lock valve (624) is opened mechanically when the side sections are unfolded.
The side sections for the 8 row header are independently mechanically locked. For this the conical drives are regulated against the spring in the hydraulic ram (361), until they engage in the groove. When folding in the transport position, the hydraulic ram (361) operate parallel so that the drives lock on the side sections.

The return flow restrictor (727) stops the possibility of a collision of the side sections when folding into the transport position.

Note: A description and information about the operation of the pressure relief valve and the returns valve can be found in chapter 3.

https://truckmanualshub.com/

5.6 Layout of the components

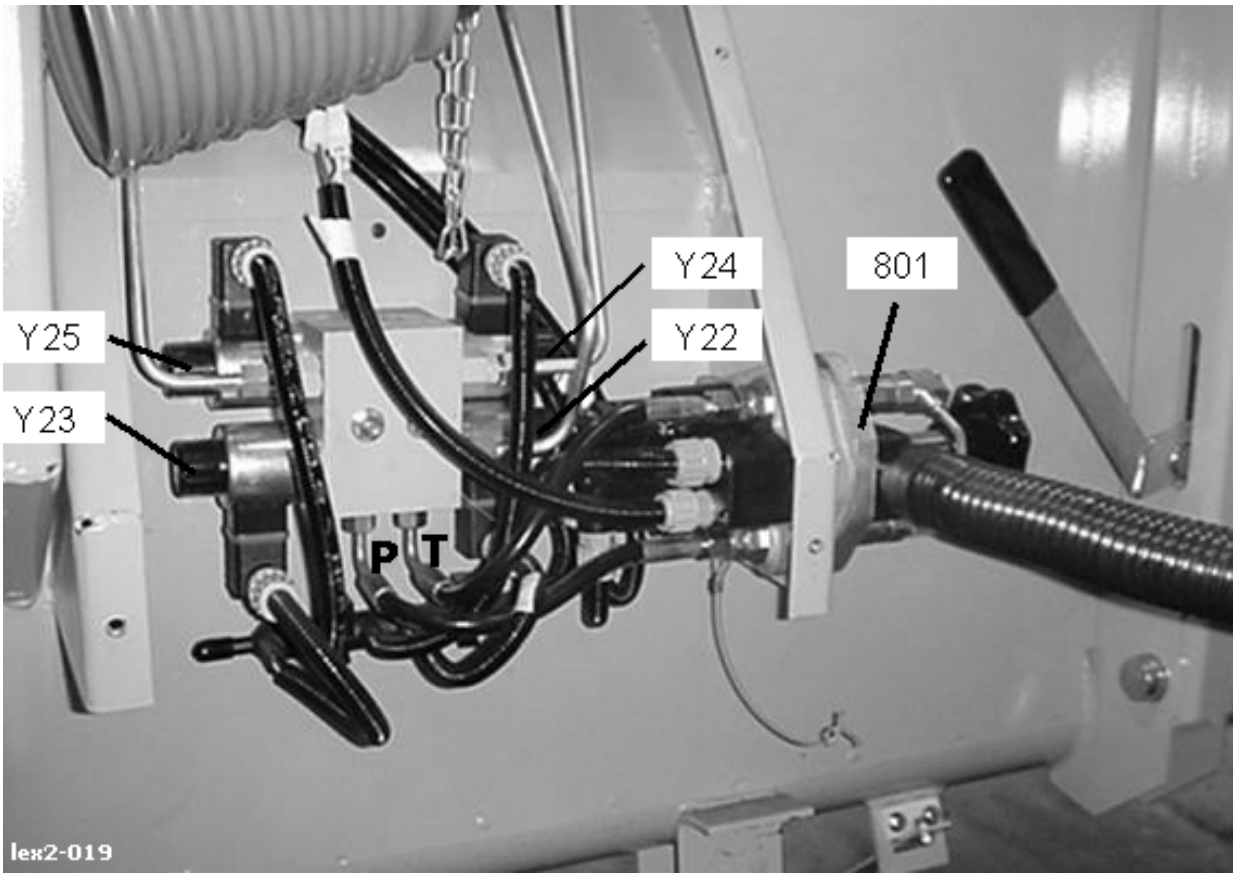

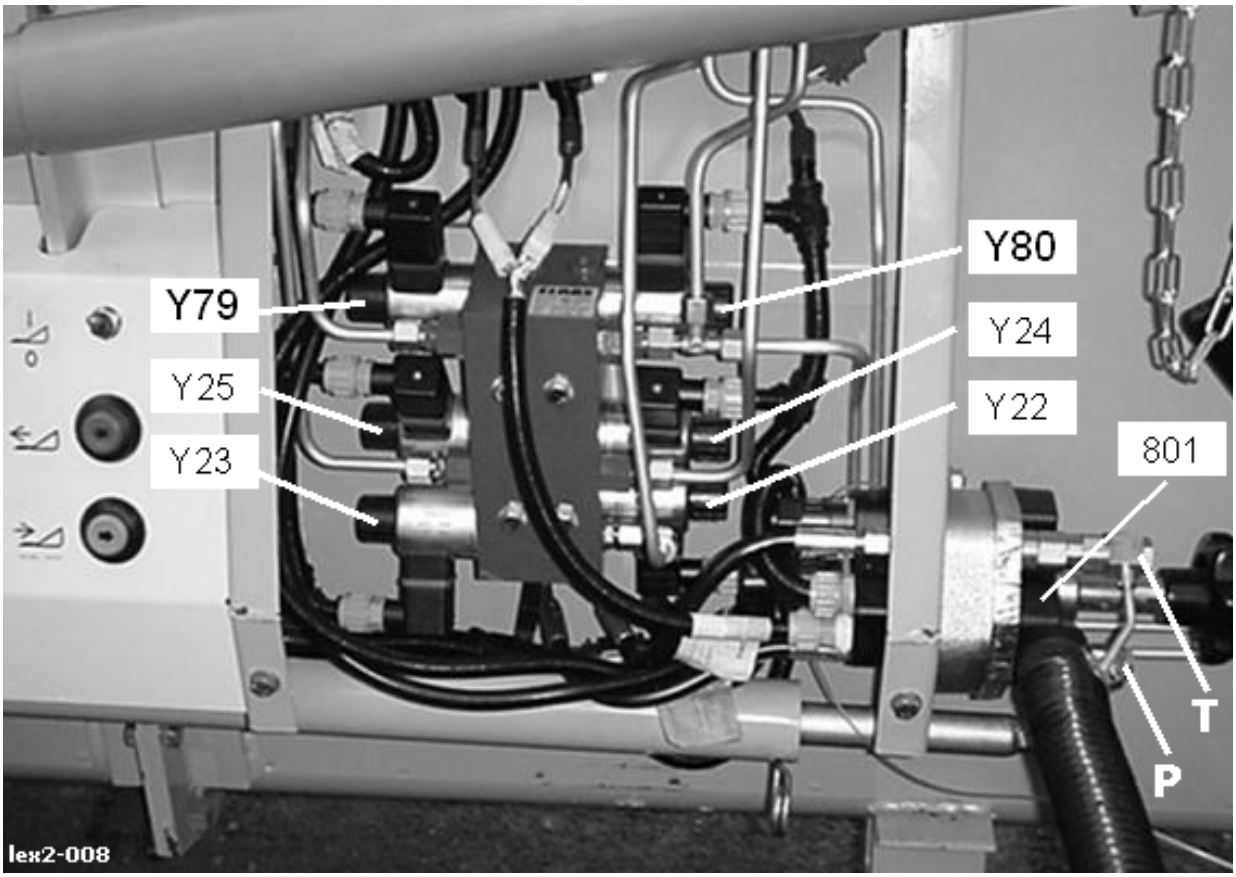

https://truckmanualshub.com/

Key to diagram

801	- Quick release connector (P/T) for front attachment
Y22	- Solenoid valve for raising the reel
Y23	- Solenoid valve for lowering the reel
Y24	- Solenoid valve for reel forward
Y25	- Solenoid valve for reel backward
Y79	- Solenoid valve for table forward
Y80	- Solenoid valve for table backward
P	- Return to returns valve
T	- Connection to tank

https://truckmanualshub.com/

Layout of components

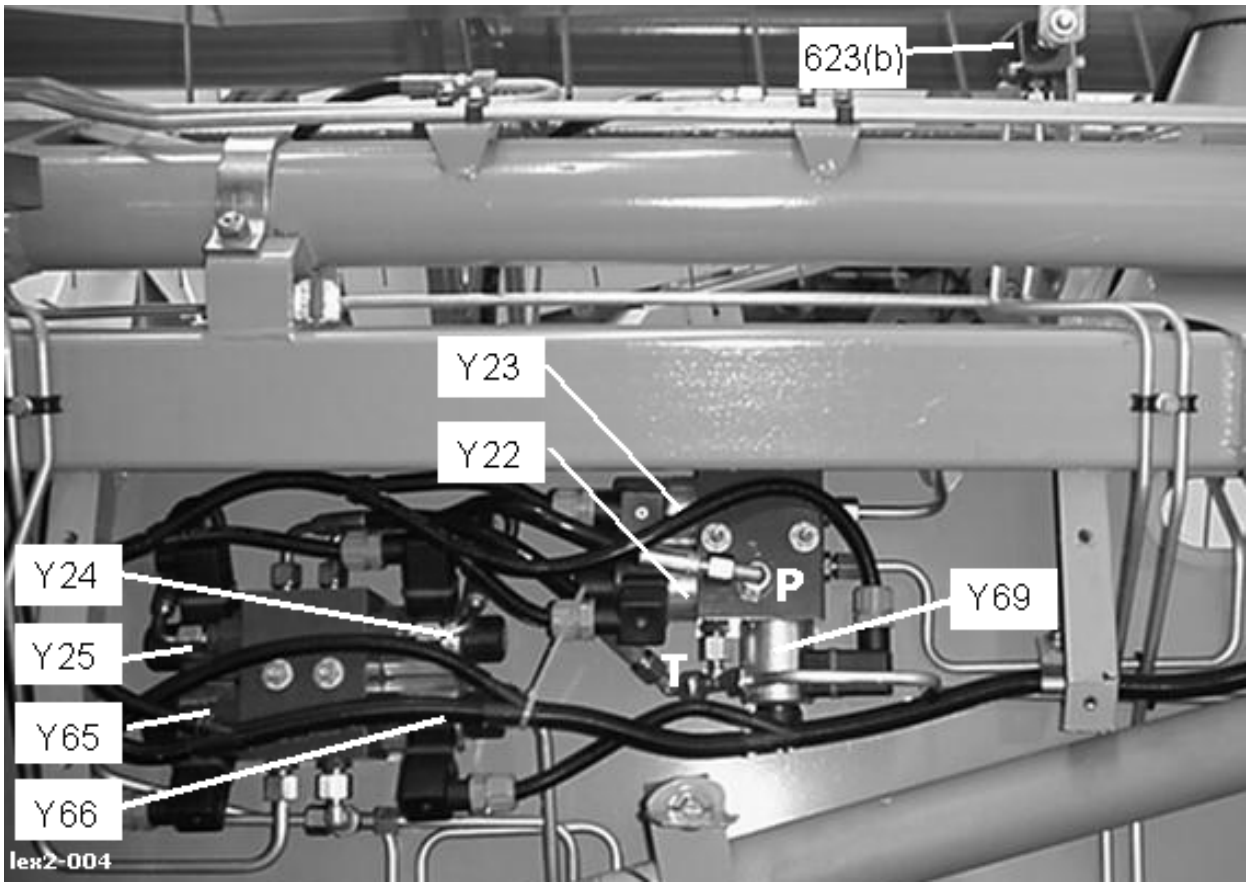

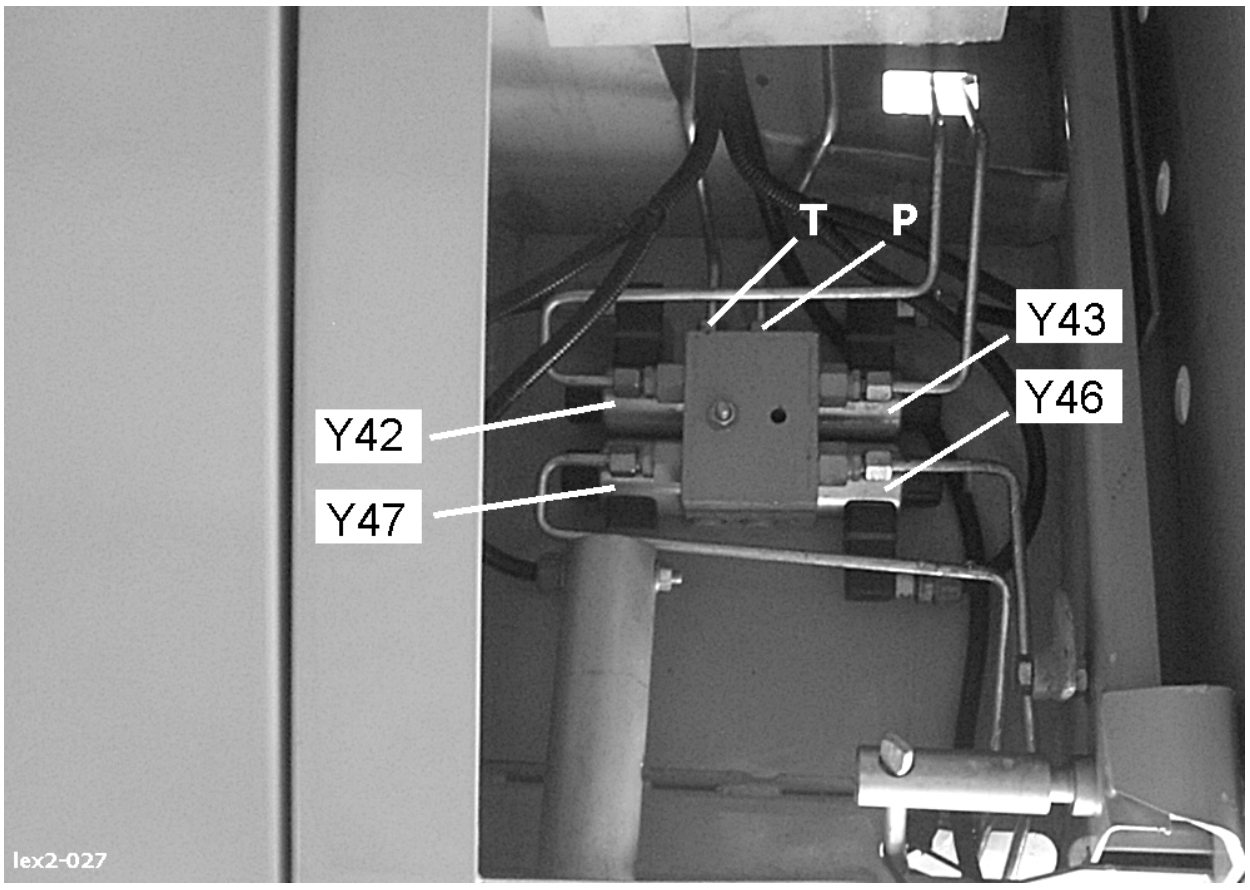

https://truckmanualshub.com/

Key to diagram

623(b) - Pilot-operated check valve

Y22 - Solenoid valve for raising the reel
Y23 - Solenoid valve for lowering the reel
Y24 - Solenoid valve for reel forward
Y25 - Solenoid valve for reel backward
Y42 - Solenoid valve for folding out the maize picker (work position)
Y43 - Solenoid valve for folding in the maize picker (transport position)
Y46 - Solenoid valve for closing the snap plates
Y47 - Solenoid valve for opening the snap plates
Y65 - Solenoid valve for folding the cutterbar to work position
Y66 - Solenoid valve for folding the cutterbar to transport position
Y69 - Solenoid valve for lock valve

P - Return to returns valve
T - Connection to tank

https://truckmanualshub.com/

5.7 Reel raise and lower adjustment

Solenoid valve (3/3 way) for standard and VARIO cutterbars

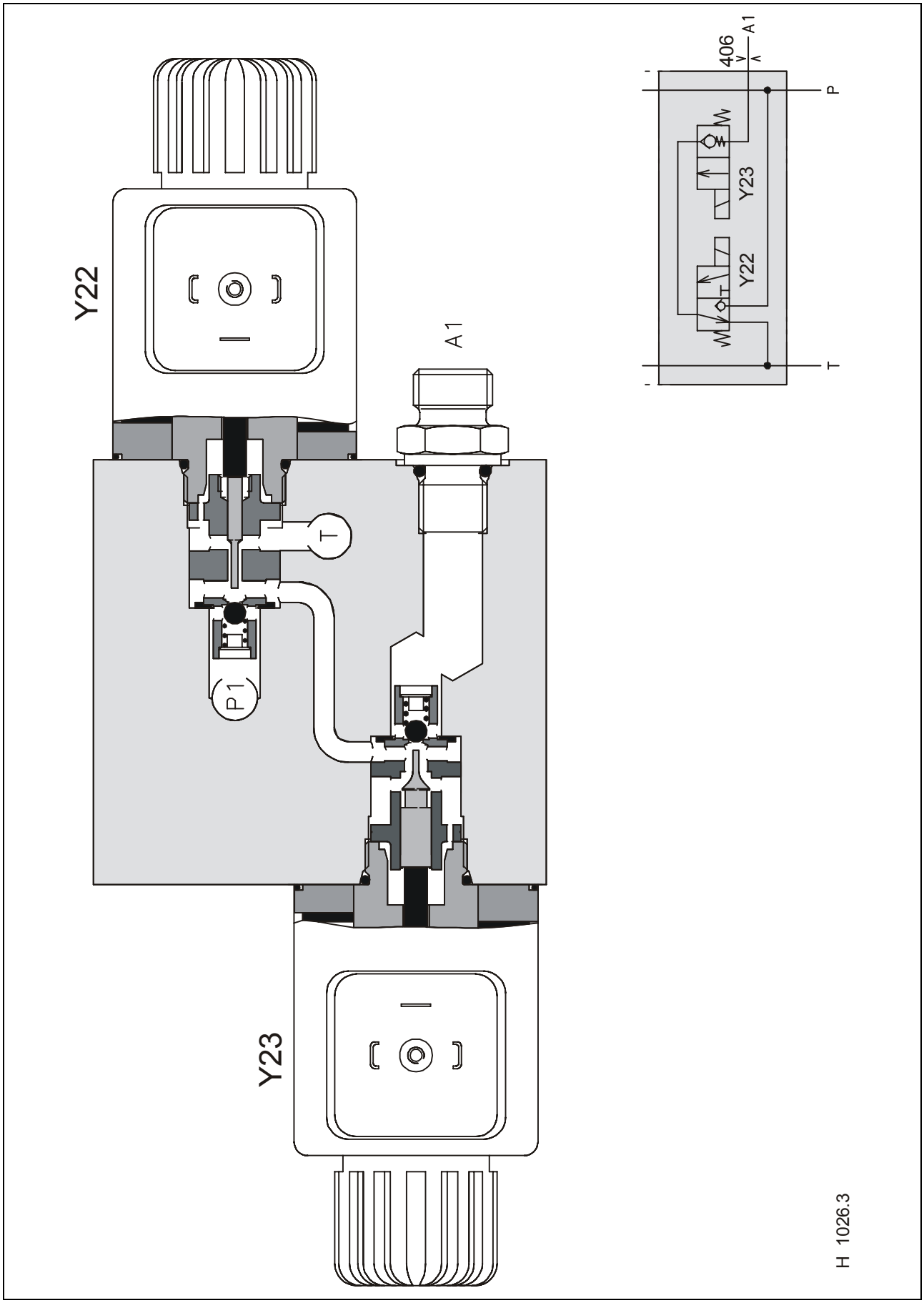

https://truckmanualshub.com/

Key to diagram

406	- Restrictor	Ø 0.8 mm
Y22	- Solenoid valve for raising the reel	
Y23	- Solenoid valve for lowering the reel	
T	- Connection to tank	
P1	- Pump connection via returns valve	
A1	- Reel height adjustment hydraulic ram port	

Function – neutral

The hydraulic ram is tightly locked by the ball valve in the valve insert at the connection A.

Function reel raise

The solenoid valve (Y22) and the returns valve are switched together. The relative spool pushes the ball off its seat and at the same time shuts off the flow to tank. The oil then flows to the second solenoid valve (Y23) where the pressure pushes the ball off its seat and flows out of port A.

Function reel lower

The solenoid valve (Y23) is switched without the returns valve. The corresponding spool pushes the ball off its seat, thus allowing the oil to flow from the port A, over the valve insert, across the solenoid (Y22) that is not operated and finally back to tank.

https://truckmanualshub.com/

Reel raise and lower adjustment

Solenoid valve (3/3 way) with lock valve for folding cutterbars

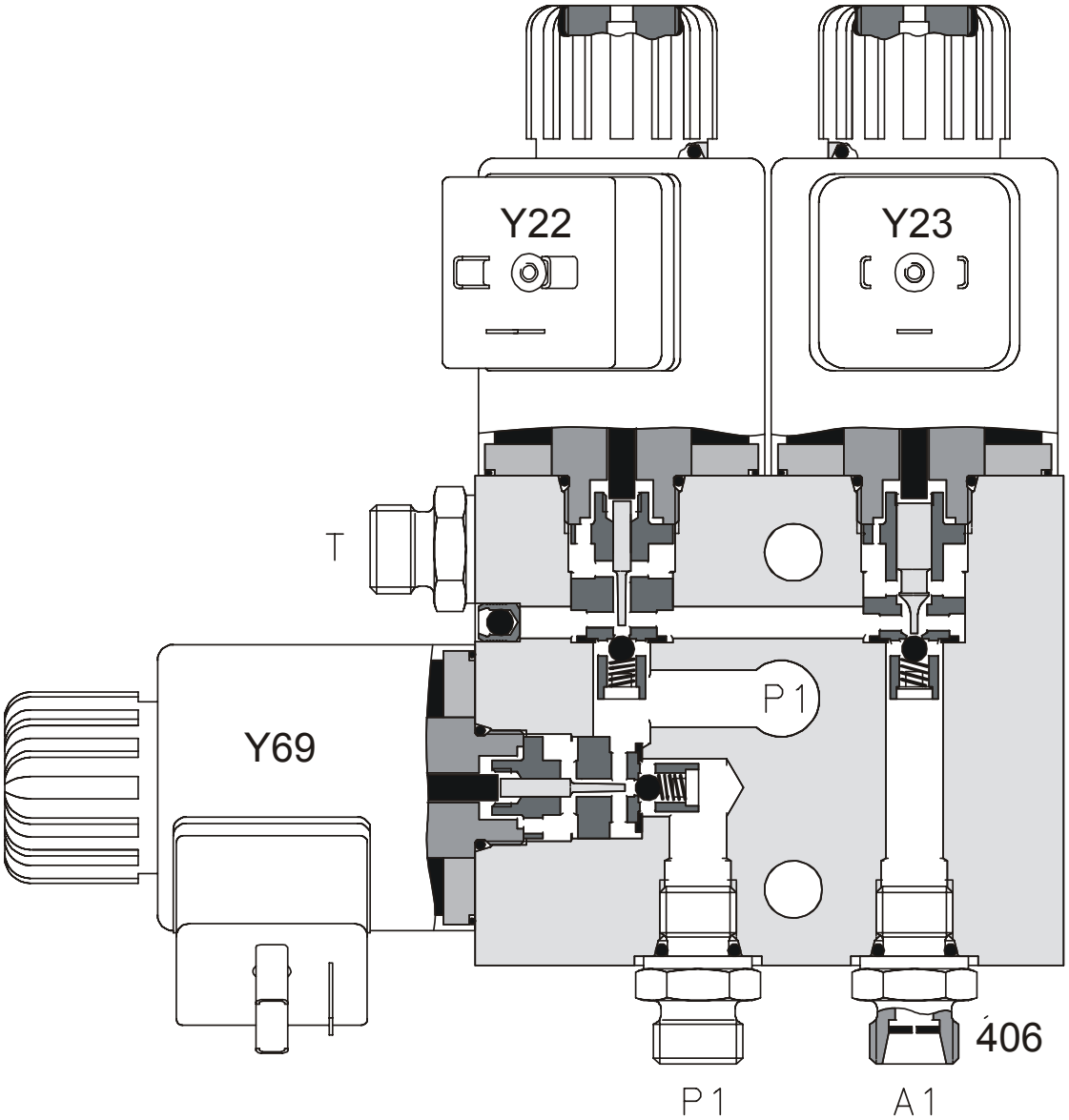

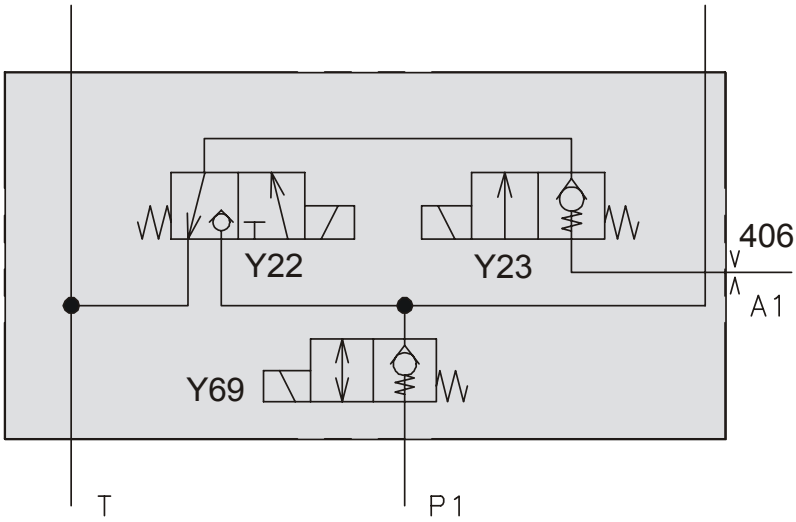

H 1087.1

https://truckmanualshub.com/

Key to diagram

406	- Restrictor	Ø 0.8 mm
Y22	- Solenoid valve for raising the reel	
Y23	- Solenoid valve for lowering the reel	
Y69	- Solenoid valve for lock valve	
T	- Connection to tank	
P1	- Pump connection via the returns valve	
A1	- Reel height adjustment hydraulic ram port	

Function – neutral

The hydraulic ram is tightly locked by the ball valve in the valve insert at the connection A.

Safety switching

The safety valve (Y69) locks the oil flow for several functions on the cutterbar, when there is a fault and the electrical connection to the safety switch is lost. The safety switch allows the folding procedure to continue, only when the reel is completely down and back and the transport regulator has been slackened off.

Function reel raise

The solenoid valve (Y22) and the returns valve are switched together. The relative solenoid pushes the ball off its seat and at the same time shuts off the flow to tank. The oil then flows to the second solenoid valve (Y23) where the pressure pushes the ball off its seat and flows out of port A.

Function reel lower

The solenoid valve (Y23) is switched without the returns valve. The solenoid pushes the ball off its seat, thus allowing the oil to flow from the port A, over the valve, across the solenoid (Y22) that is not operated and finally back to tank.

https://truckmanualshub.com/

Reel height adjustment
Master and slave hydraulic rams

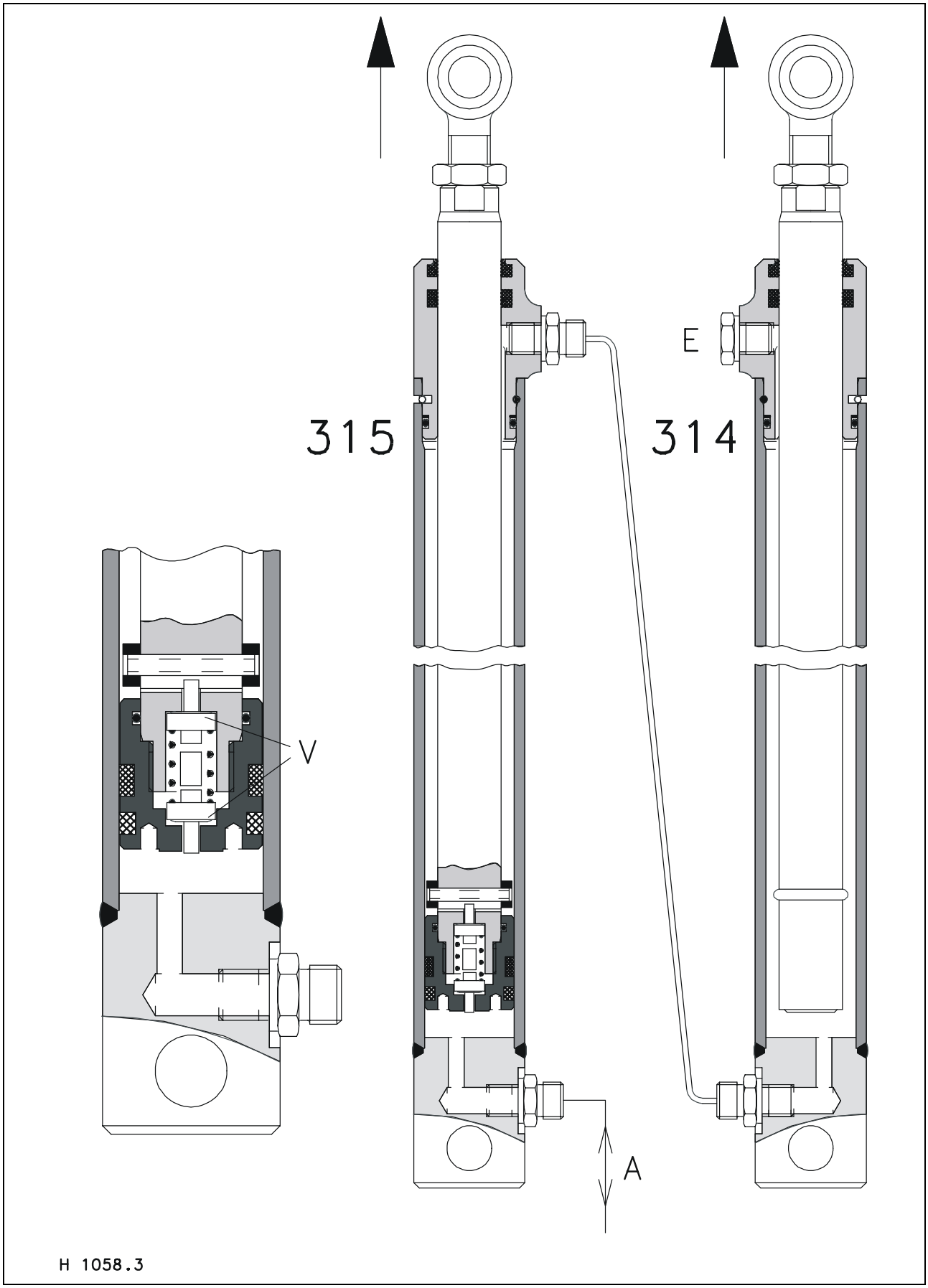

https://truckmanualshub.com/

Key to diagram

314 - Slave cylinder for reel height adjustment
315 - Master cylinder for reel height adjustment

A - Hydraulic ram for reel height adjustment
V - Base valves
E - Bleeding screw

Simultaneous function

The two rams are so designed that the surface area of the left hand ram (315) is the same as the right hand ram (314). The rams are like this so that under pressure they both travel parallel.

Base valves

The base valves (V) in the master cylinder (315) open when reaching the upper end stop so that the slave cylinder can be filled and bled.

Note: When repairing the rams, just note that the single acting ram is only operated firstly when the double acting ram has extended fully. Ensure that the reel is correctly and safely supported.

https://truckmanualshub.com/

5.8 Reel fore and aft

Solenoid valve (4/3 way) with lock valve

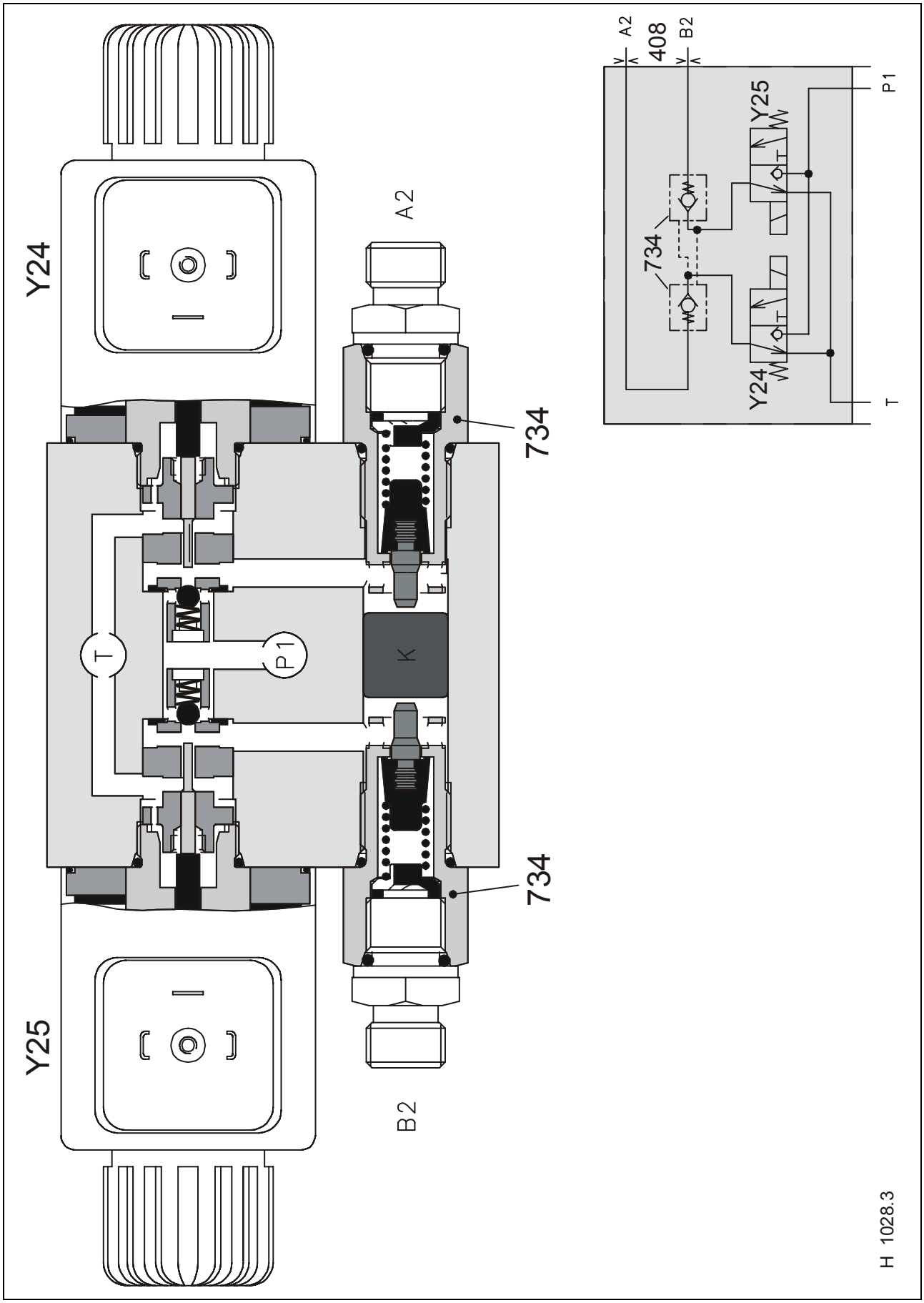

https://truckmanualshub.com/

Key to diagram

408	- Restrictor . . . . . Ø 1.2 mm
734	- One-way valve (lock-up valve unit)
Y24	- Solenoid valve for reel forward
Y25	- Solenoid valve for reel backward
T	- Tank port
P1	- Pump port via returns valve
A2	- Reel fore and aft adjustment backward hydraulic ram port
B2	- Reel fore and aft adjustment forward hydraulic ram port
K	- Piston

Function – neutral

Both side of the rams are tightly locked up by the one-way valve (734) at ports A and B.

Function

When required, the relative solenoid valve (Y24/Y25) is operated and at the same time the returns valve is also opened.
The relative spool pushes the ball off its seat and at the same time closes the flow to tank. The pressure then flows down to the lock valve, then builds up and presses on the plunger. The plunger (K) then operates the opposite lock valve (734) on port A or B.
The return oil from the ram, then flows back to tank via the valve insert of non switched solenoid valve (Y24/Y25). The pressure then builds up and operates the second lock valve (734). The oil then flows out of the port and to the hydraulic ram.

Safety switching with the folding cutterbar

The safety valve locks the oil flow for several functions on the cutterbar, when there is a fault and the electrical connection to the safety switch is lost. The safety switch allows the folding procedure to continue, only when the reel is completely down and back and the transport regulator has been slackened off.

https://truckmanualshub.com/

Reel fore and aft
Rams with base valves

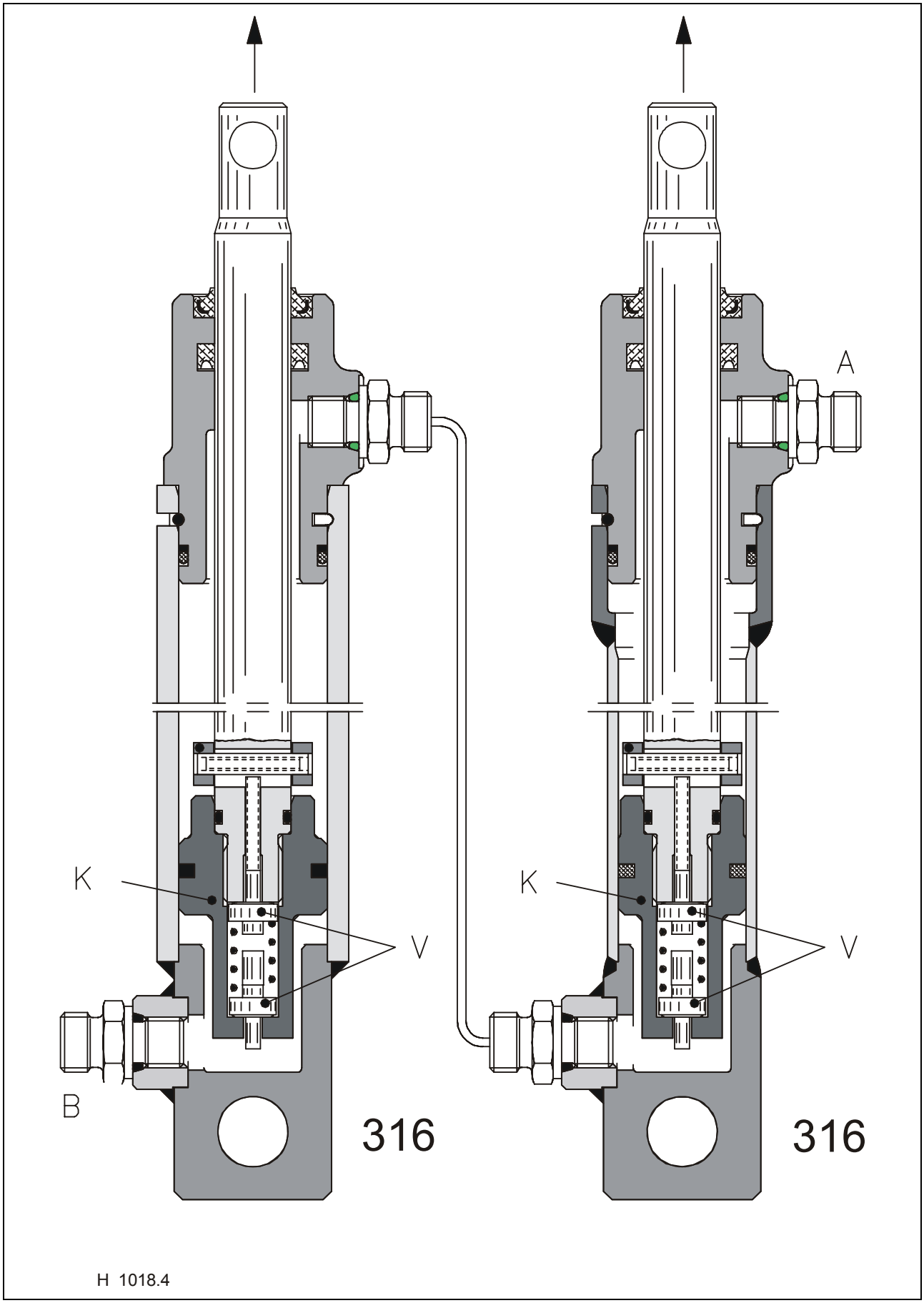

https://truckmanualshub.com/

Key to diagram

316 - Hydraulic ram for reel fore and aft adjustment

A - Hydraulic ram port for reel fore and aft adjustment backward
B - Hydraulic ram port for reel fore and aft adjustment forward
K - Plunger
V - Base valves

Simultaneous function

The two rams are so designed that the surface area of the left-hand ram is the same as that of the right-hand ram. The rams therefore provide simultaneous motion so that they both travel in parallel regardless of the load applied.

Base valves

The base valve (V) operates when ever the rams reach their end stops so that the rams can get bled.
After a repair it is necessary to hold both rams against the end stop using hydraulic pressure, for about 15 seconds.

Note: The rams on the folding cutterbar work in the same way, except for the fact that there are three rams.

https://truckmanualshub.com/

5.9 Table adjustment, Vario cutterbars

Solenoid valves (4/3 way) with lock valve

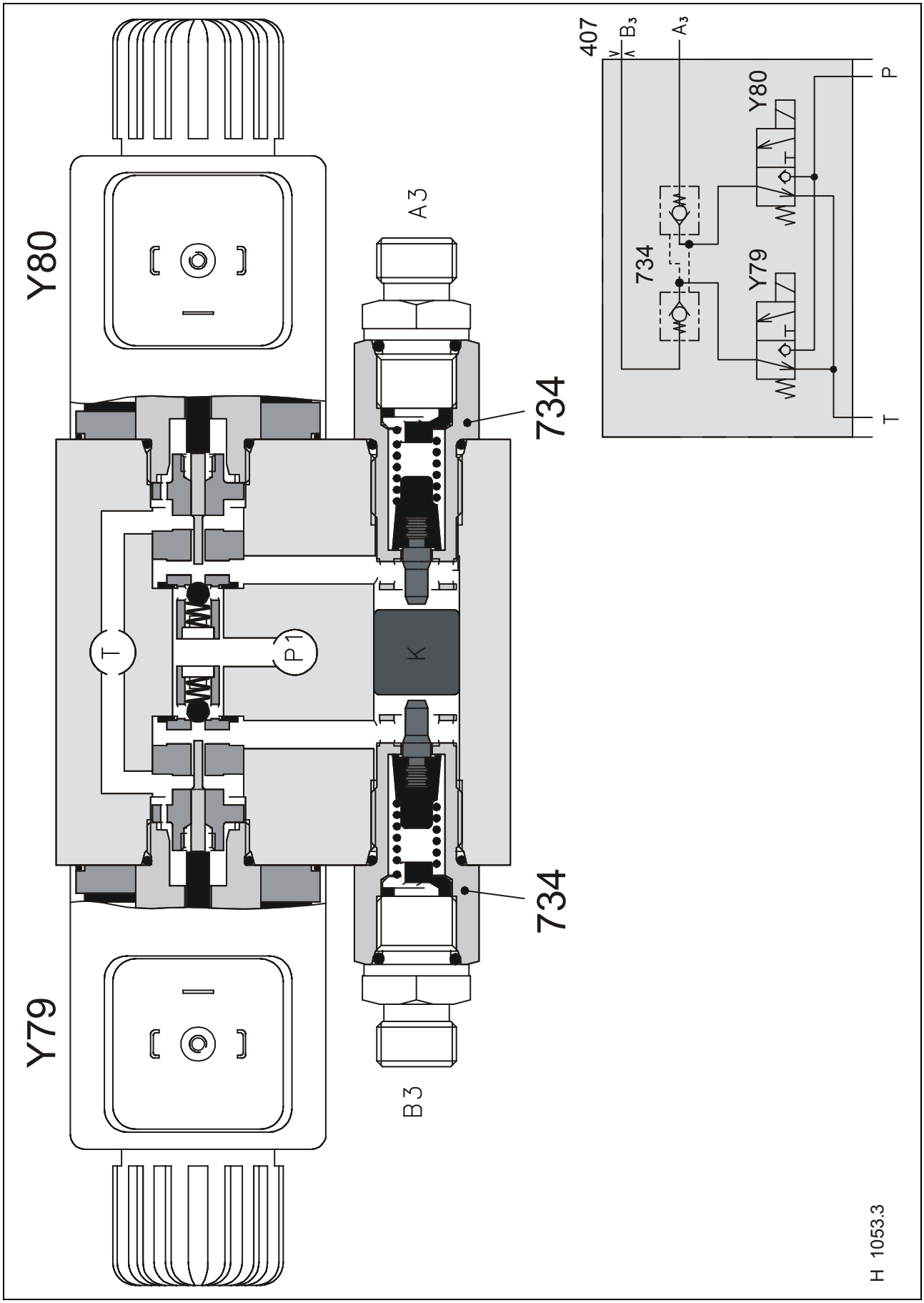

https://truckmanualshub.com/

Key to diagram

407	- Restrictor	Ø 1.0 mm
734	- One-way valve (lock-up valve unit)	
Y79	- Solenoid valve for table forward	
Y80	- Solenoid valve for table backward	
T	- Tank port	
P1	- Pump port via returns valve	
A3	- Hydraulic ram port for table adjustment	Ø 40/20 mm
B3	- Hydraulic ram port for table adjustment	Ø 45/20 mm
K	- Plunger	

Function – neutral

Both sides of the rams are tightly locked up by the one-way valves (734) at ports A and B.

Function

When required the relative solenoid valve (Y79/Y80) is operated, and at the same time the returns valve is also opened.
The relative spool pushes the ball off its seat and at the same time closes the flow to tank. The pressure then flows down to the lock valve, then builds up and presses on the plunger. The plunger (K) then operates the opposite one-way valve (734) on port A or B.
The return oil from the ram, then flows back to tank via the valve insert of the non switched solenoid valve (Y79/Y80). The pressure then builds up and operates the second one-way valve (734). The oil then flows out of the port and to the hydraulic ram which travels in or out.

https://truckmanualshub.com/

5.10 Cutterbar folding function

Solenoid valve (4/3 way) with lock valve

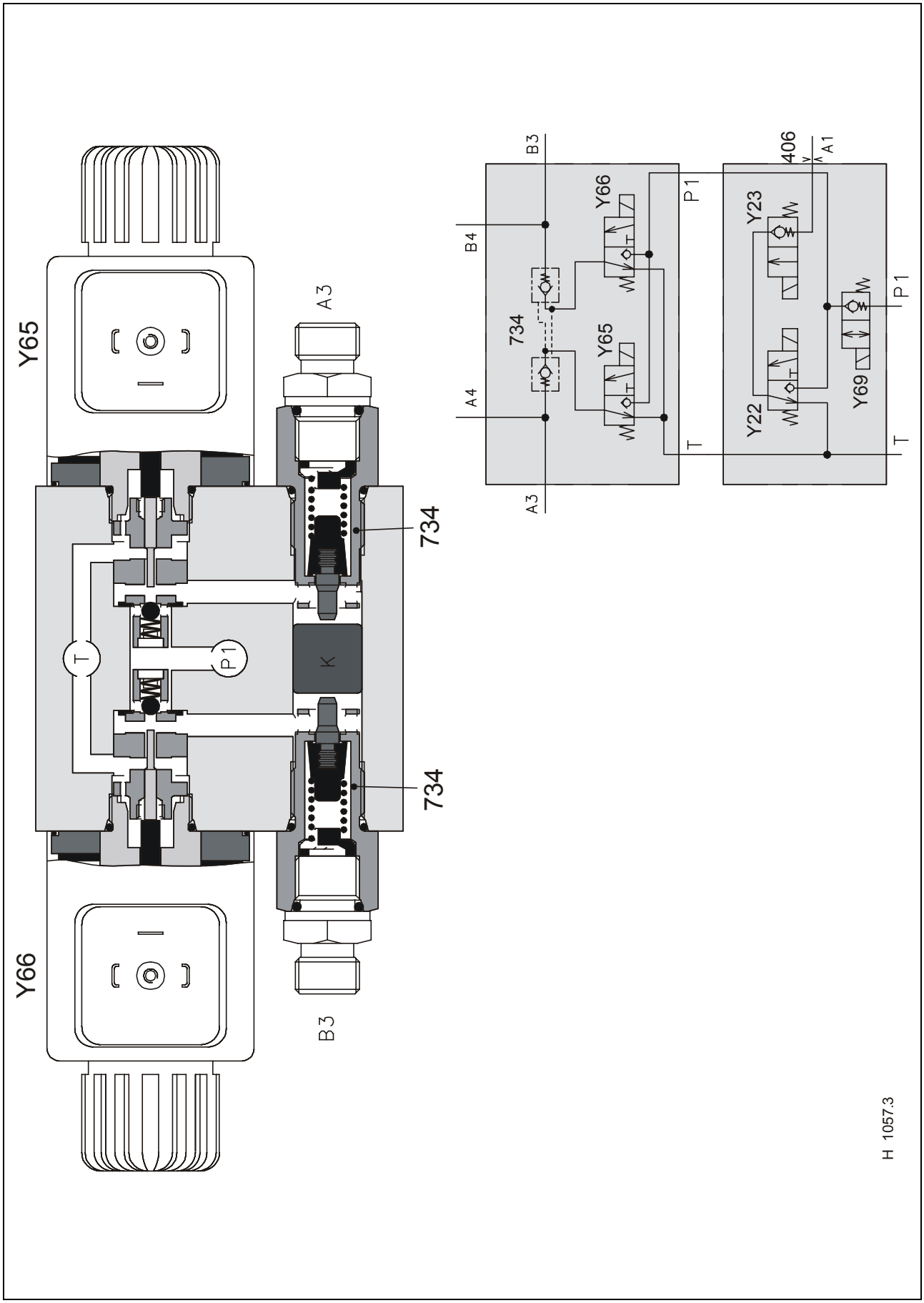

https://truckmanualshub.com/

Key to diagram

734	- One-way valve (lock-up valve unit)
Y65	- Solenoid valve for folding the cutterbar to work position
Y66	- Solenoid valve for folding the cutterbar to transport position
Y69	- Solenoid valve for lock valve
T	- Connection to tank
P1	- Pump connection via returns valve
A1	- Hydraulic ram port for reel raise and lower
A3	- Hydraulic ram port for locking in working position
B3	- Hydraulic ram port for locking in transport position
K	- Plunger

Function – neutral

Both sides of the rams are locked up by the lock valve (734) at ports A and B.

Function

When required the relative solenoid valve (Y65/Y66) is operated, and at the same time the returns valve is also opened.
The relative spool pushes the ball off its seat and at the same time closes the flow to tank. The pressure then flows down to the lock valve, then builds up and presses on the plunger. The plunger (K) then operates the opposite one-way valve (734) on port A or B.
The return oil from the ram, then flows back to tank via the valve insert of the non switched solenoid valve (Y65/Y66). The pressure then builds up and operates the second one-way (734). The oil then flows out of the port and to the hydraulic ram which travels in or out.

Safety switching with the folding cutterbar

The safety valve (Y69) locks the oil flow for several functions on the cutterbar, when there is a fault and the electrical connection to the safety switch is lost. The safety switch allows the folding procedure to continue, only when the reel is completely down and back and the transport regulator has been slackened off.

https://truckmanualshub.com/

Cutterbar folding function
Hydraulic ram with pilot-operated check valve

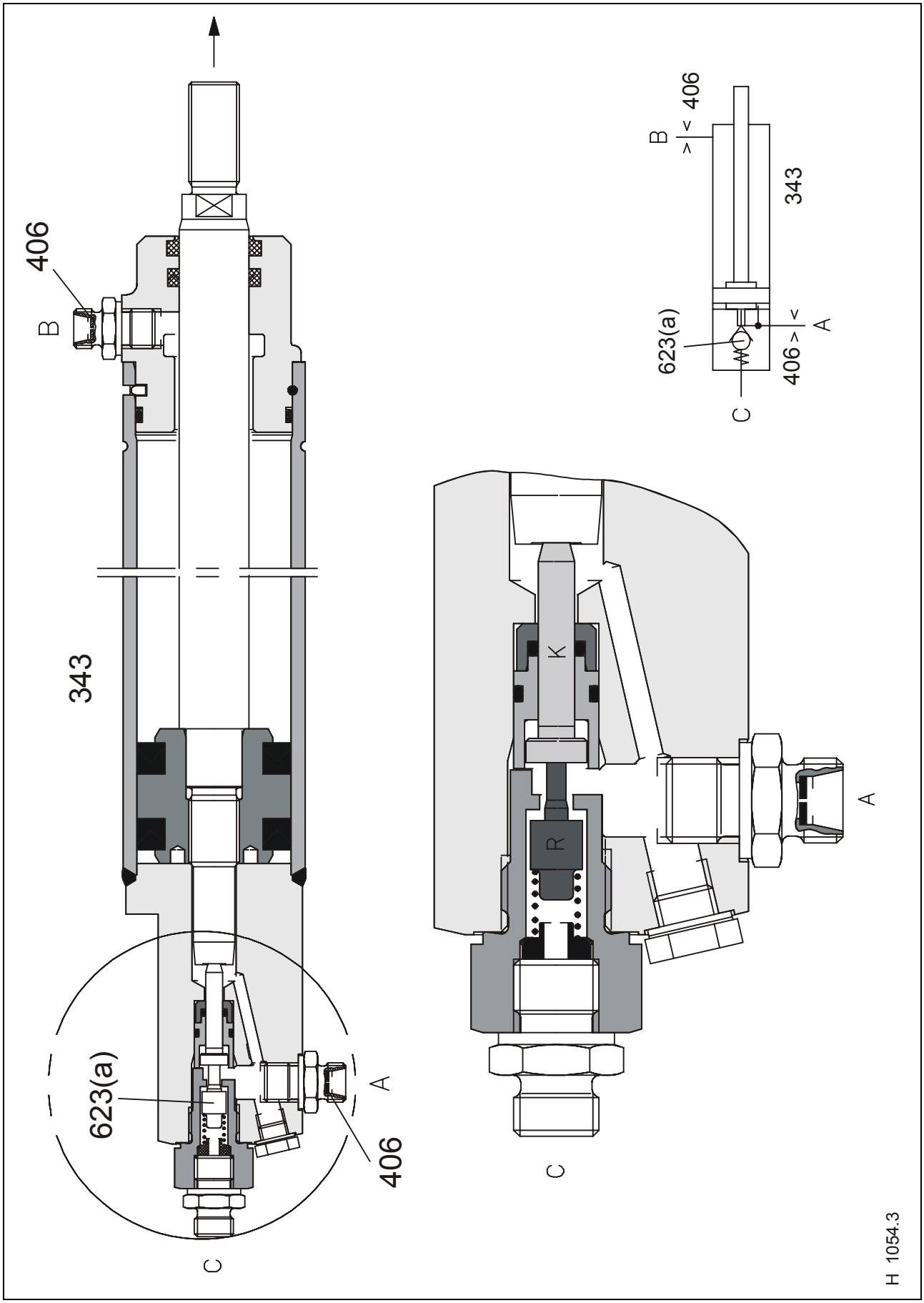

https://truckmanualshub.com/

Key to diagram

343 - Hydraulic ram for cutterbar folding . . . . . Ø 55/25 mm
406 - Restrictor . . . . . Ø 0.8 mm
623(a) - Pilot-operated check valve

A - Hydraulic ram port for folding the cutterbar in working position
B - Hydraulic ram port for folding the cutterbar to transport position
C - Hydraulic ram for locking in the transport position
K - Connecting pin
R - One way valve

Function

When the ram is completely retracted, then the one way valve (R) is opened by the connecting rod (K) so that the oil from the regulating ram is also released to tank.

https://truckmanualshub.com/

5.11 Knife drive - Rape

Solenoid valve (2/2 way) for standard and folding cutterbars

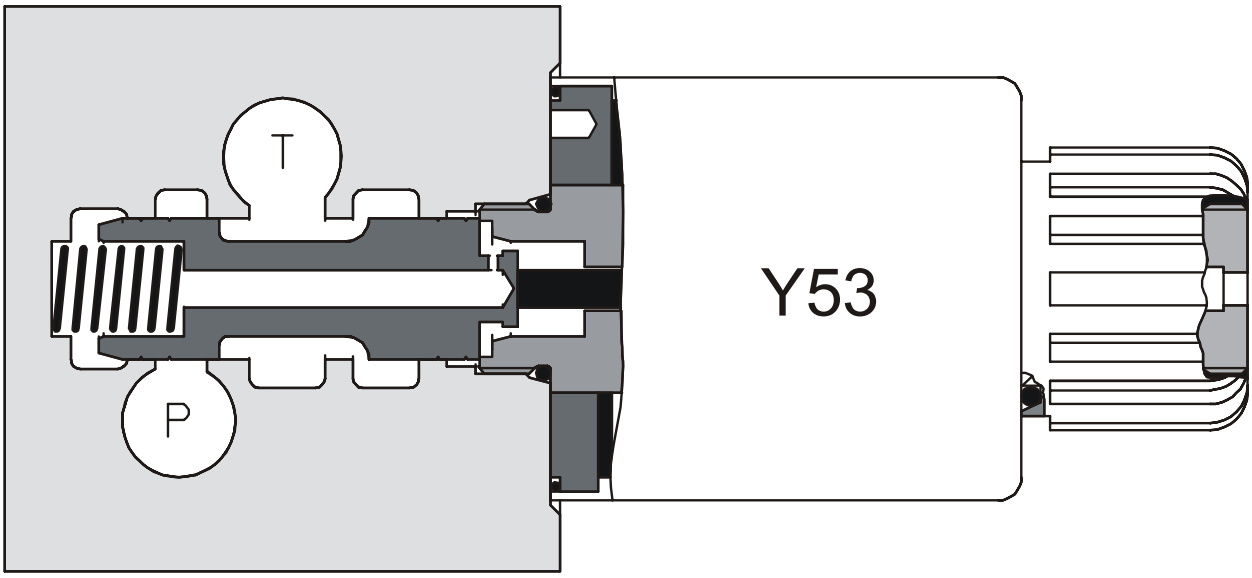

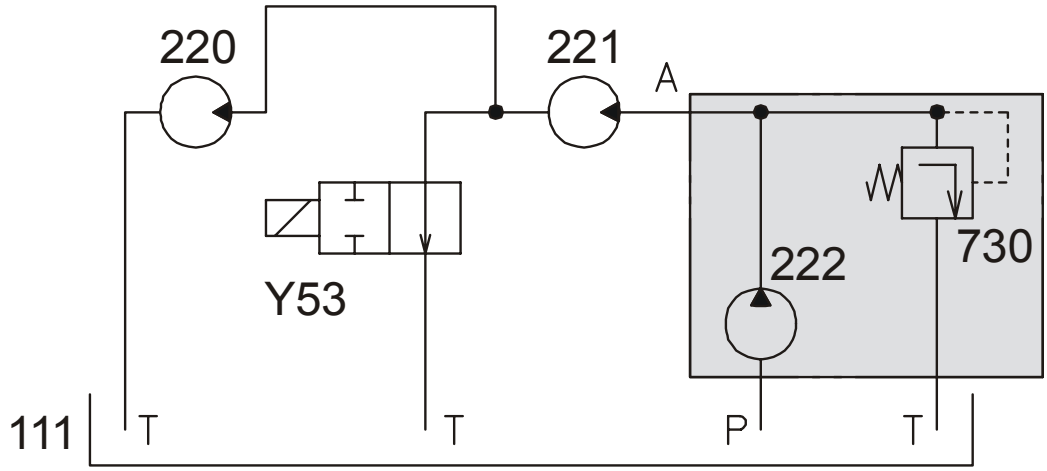

H 1078.1

https://truckmanualshub.com/

Key to diagram

111	- Oil tank	2 litres
220	- Hydraulic motor for left-hand knife drive	
221	- Hydraulic motor for right-hand knife drive	
222	- Hydraulic pump	9 cm³
730	- Pressure relief valve	180 bar
Y53	- Solenoid valve for left-hand knife disengagement	
T	- Connection to tank	
P	- Connection to pump	
A	- Knife drive hydraulic motor port	

Function

When the cutterbar is engaged, then the hydraulic pump (222) for the rape knife is running. The solenoid valve (Y53) allows the left hand knife to be switched off from the cab.
On the left hand side of the machine, near the hydraulic pump (222) there is a pressure relief valve (730) and is set for **180 bar**.

https://truckmanualshub.com/

Knife drive - Rape

Solenoid valve (3/2 way) for VARIO cutterbars

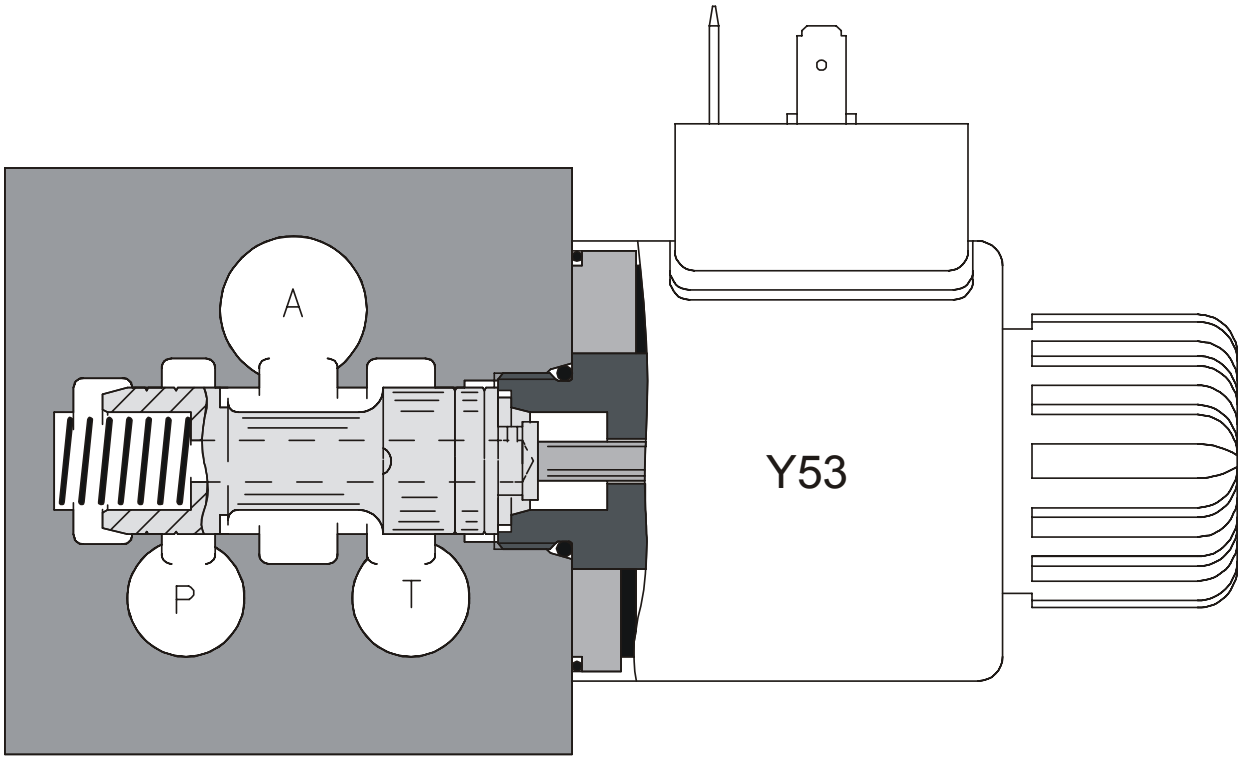

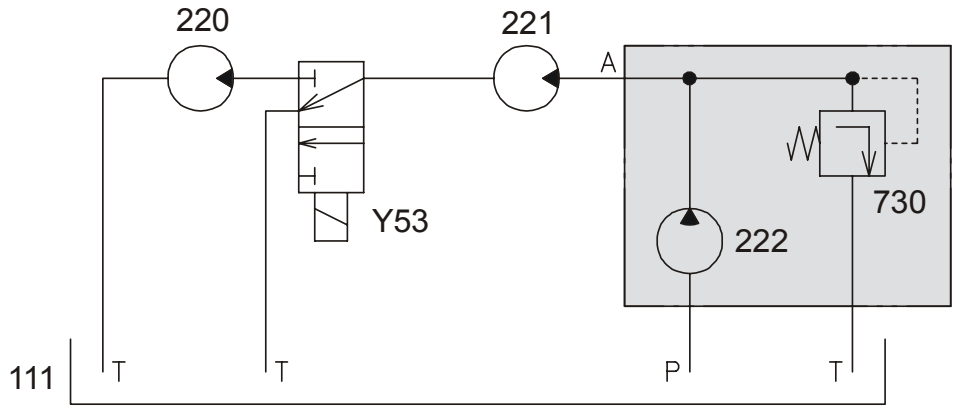

H 1093.1

https://truckmanualshub.com/

Key to diagram

111	- Oil tank	1.8 litres
221	- Hydraulic motor for knife drive	
222	- Hydraulic pump	14 cm^3 left-hand
730	- Pressure relief valve	180 bar
Y53	- Solenoid valve for left-hand knife disengagement	
T	- Connection to tank	
P	- Connection to pump	
A	- Knife drive hydraulic motor port	

Function

When the cutterbar is engaged, then the hydraulic pump (222) for the rape knife is running. The solenoid valve (Y53) allows the left hand knife to be switched off from the cab.
On the left hand side of the machine, near the hydraulic pump (222) there is a pressure relief valve (730) and is set for **180 bar**.

https://truckmanualshub.com/

5.12 Maize picker

Solenoid valve (4/3 way) folding maize picker / adjusting snap plates

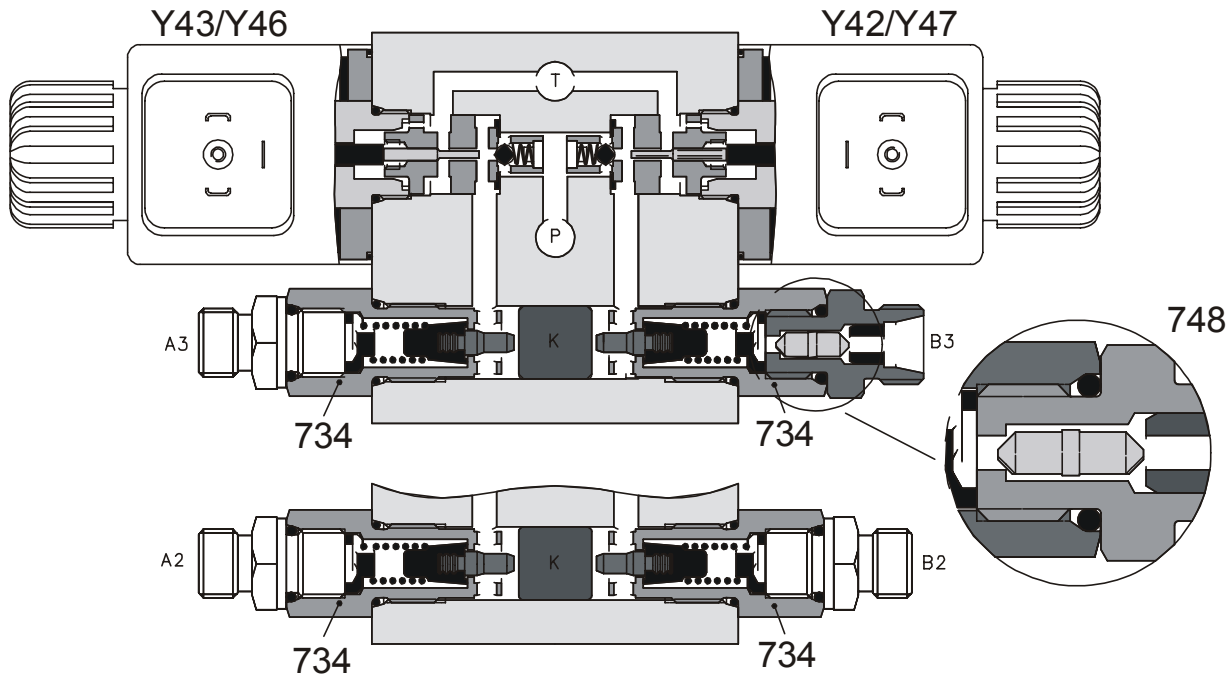

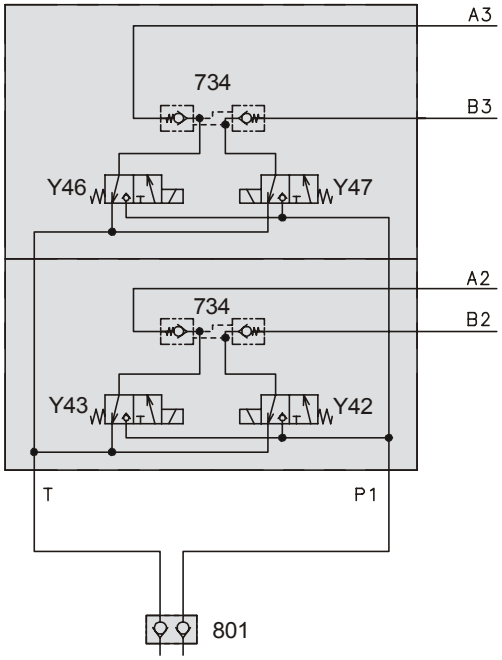

H 1059.4

https://truckmanualshub.com/

Key to diagram

734	- One-way valve (lock-up valve unit)
748	- Restricted one-way valve
801	- Quick release coupling (P/T) for front attachments
Y42	- Solenoid valve for folding out the maize picker (work position)
Y43	- Solenoid valve for folding in the maize picker (transport position)
Y46	- Solenoid valve for closing the snap plates
Y47	- Solenoid valve for opening the snap plates
T	- Connection to tank
P1	- Pump connection via returns valve
A2	- Hydraulic ram port for folding in the maize picker
B2	- Hydraulic ram port for folding out the maize picker
A3	- Hydraulic ram port for narrowing the snap plates (close)
B3	- Hydraulic ram port for widening the snap plates (open)
K	- Plunger

Function – neutral

Both sides of the rams are tightly locked up by the one-way valve (183) at ports A and B.

Function

When required the relative solenoid valve (Y43/Y42 - Y46/Y47) is operated, and at the same time the returns valve is also opened.
The relative solenoid valve pushes the ball off its seat and at the same time closes the flow to tank. The pressure then flows down to the lock valve, then builds up and presses on the plunger. The plunger (K) then operates the opposite one-way valve (734) on port A or B.
The return oil from the ram then flows back to tank via the valve insert of the non switched solenoid valve (Y43/Y42 - Y46/Y47). The pressure then builds up and operates the second lock valve (734). The oil then flows out of the port and to the hydraulic ram which travels in or out.

https://truckmanualshub.com/

Contents

Low pressure hydraulics

6.1 Circuit diagram for low-pressure hydraulics (from 2002) 6-2
Functional problems 6-3

6.2 Circuit diagram for low-pressure hydraulics (from machine no. ...) 6-4
Functional problems 6-5

6.3 Circuit diagram for low-pressure hydraulics (up to machine no. ...) 6-6
Functional problems 6-7

6.4 Layout of components 6-8

6.5 Low pressure valve 6-10
Solenoid valve (from machine no.) 6-10
Function 6-11
Pressure relief valve (from machine no.) 6-11
Solenoid valve (up to machine no.) 6-12
Function 6-13
Pressure relief valve (up to machine no.) 6-13

6.6 3D sieve box control 6-14
Pendulum housing with valve 6-14
Function 6-15
Bleeding of the 3-D system 6-15

6.7 Front end attachment drive 6-16
Hydraulic ram with rotary coupling 6-16

6.8 Engine speed 6-18
Hydraulic ram 6-18
Adjusting regulations 6-19

6.9 Servo line 6-20
Hydraulic ram 6-20
Functions 6-20

6.10 Chain greasing for the unloading system 6-22
Greasing pump 6-22
Function 6-23

https://truckmanualshub.com/

6.1 Low-pressure hydraulic system circuit diagram (from 2002)

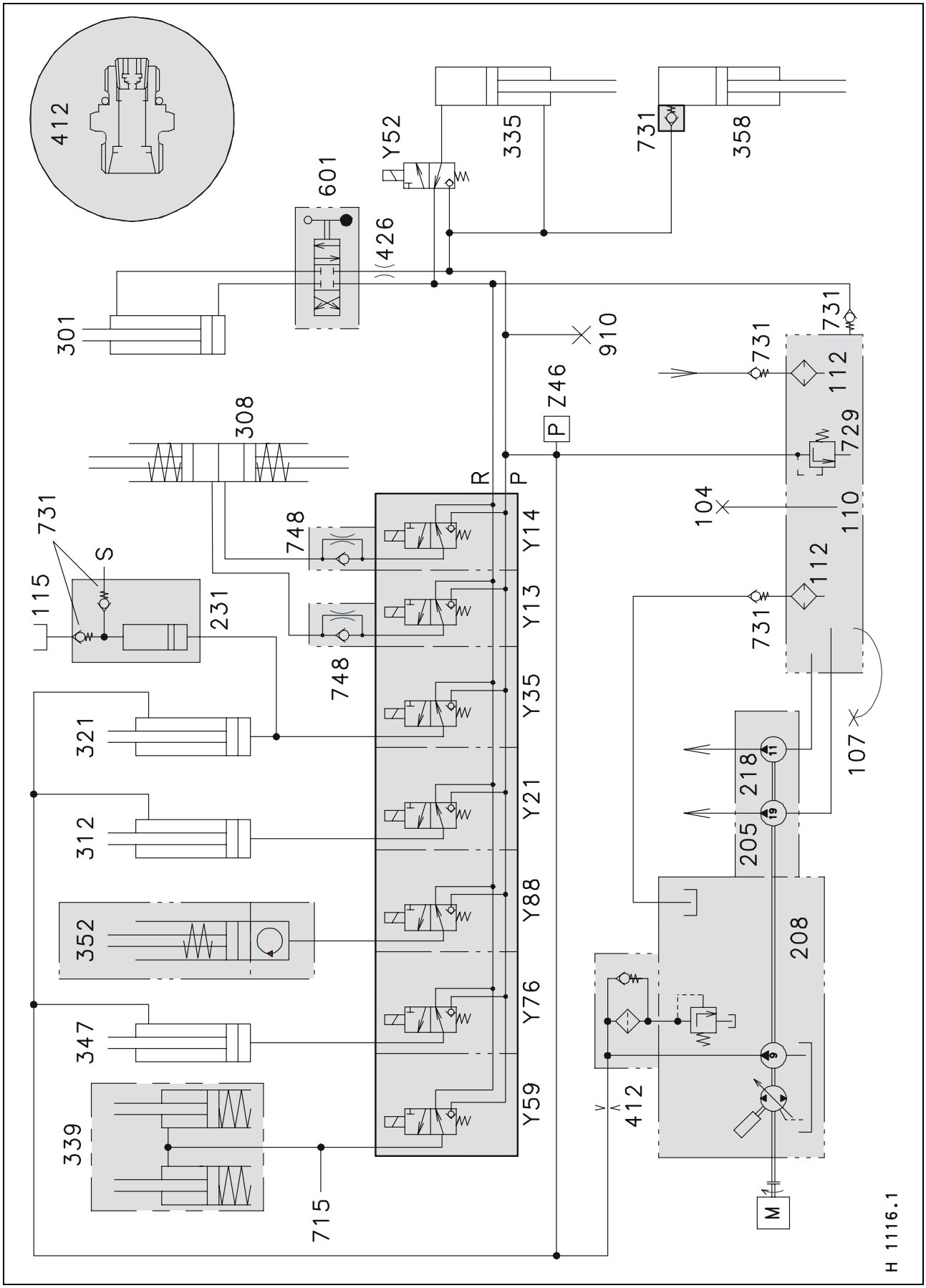

https://truckmanualshub.com/

Key to diagram

104	- Tank vent	
107	- Oil drain	
110	- Oil tank	
112	- Working hydraulics sieve filter	
115	- Grease reservoir for grain tank unloading	
205	- Gear pump for working hydraulics	14 cm³
208	- Axial piston pump for hydrostatic ground drive	
218	- Gear pump for steering hydraulics	11 cm³
231	- Grease pump for grain tank unloading	
301	- Hydraulic ram for 3D sieve box	Ø 50/10 mm
308	- Hydraulic ram for diesel engine rpm	
312	- Hydraulic ram for threshing engagement	Ø 50/40 mm
321	- Hydraulic ram for grain tank unloading	Ø 40/30 mm
335	- Hydraulic ram for moisture measuring	
339	- Hydraulic ram for servo line	
347	- Hydraulic ram for chopper engagement	
352	- Hydraulic ram for front attachment engagement	
358	- Hydraulic ram for grain elevator chain tension	
412	- Restrictor	Ø 2 mm
426	- Bolt with restrictor hole	Ø 0.8 mm
441	- Rotary coupling	
601	- Pendulum valve 3D sieve box	
715	- Short-circuit valve for servo line	
729	- Pressure relief valve	19^{+4} bar
731	- One-way valve	
748	- One-way restrictor	Ø 0.8 mm
910	- Test port	
Y13	- Solenoid valve for engine speed – 1st step	
Y14	- Solenoid valve for engine speed – 2nd step	
Y21	- Solenoid valve for threshing engagement	
Y35	- Solenoid valve for grain tank unloading	
Y52	- Solenoid valve for moisture measuring	
Y59	- Solenoid valve for servo line	
Y76	- Solenoid valve for chopper engagement	
Y88	- Solenoid valve for front attachment engagement	
Z46	- Oil pressure switch	12 bar
T	- Connection to tank	
P	- Connection to charge pump for ground drive	
P1	- Connection for 3D sieve box and moisture measuring	
S	- Connection to grease brush for grain tank unloading	

Function problems

A problem in the low pressure system is usually down to the fact that one of the components is leaking oil either internally or externally. In order to find the fault it is necessary to connect a test gauge to the system and then engage each individual service. The one where the pressure is lost is the one at fault.

Note: The restrictor (412) is in the system to reduce the oil flow to between **5 and 7 l/min**. This ensures that even with large leakage in the system, the charge pump for the ground drive should not be starved of oil.

https://truckmanualshub.com/

6.2 Low-pressure hydraulic system circuit diagram (up to 2001 except 466-0011 to 466-0165 / 454-0011 to 454-0255 / 453-0011 to 453-0041 / 452-0011 to 452-0016)

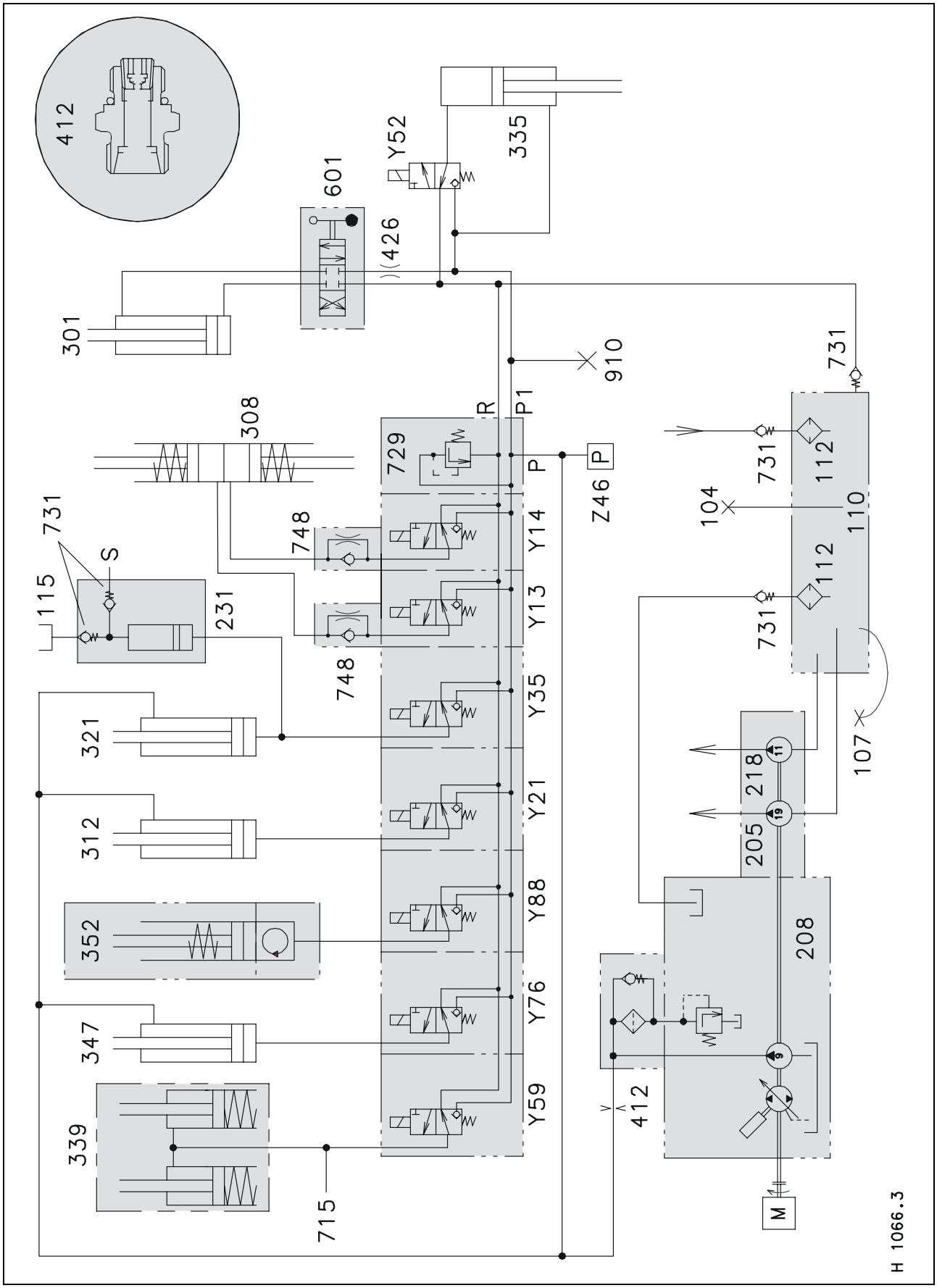

https://truckmanualshub.com/

Key to diagram

104	- Tank vent	
107	- Oil drain	
110	- Oil tank	
112	- Working hydraulics sieve filter	
115	- Grease reservoir for grain tank unloading	
205	- Gear pump for working hydraulics	14 cm³
208	- Axial piston pump for hydrostatic ground drive	
218	- Gear pump for steering hydraulics	11 cm³
231	- Grease pump for grain tank unloading	
301	- Hydraulic ram for 3D sieve box	Ø 50/10 mm
308	- Hydraulic ram for diesel engine rpm	
312	- Hydraulic ram for threshing engagement ...	Ø 50/40 mm
321	- Hydraulic ram for grain tank unloading	Ø 40/30 mm
335	- Hydraulic ram for moisture measuring	
339	- Hydraulic ram for servo line	
347	- Hydraulic ram for chopper engagement	
352	- Hydraulic ram for front attachment engagement	
412	- Restrictor	Ø 2 mm
426	- Bolt with restrictor hole	Ø 0.8 mm
441	- Rotary coupling	
601	- Pendulum valve 3D sieve box	
715	- Short-circuit valve for servo line	
729	- Pressure relief valve	19^{+4} bar
731	- One-way valve	
748	- One-way restrictor	Ø 0.8 mm
910	- Test port	
Y13	- Solenoid valve for engine speed – 1st step	
Y14	- Solenoid valve for engine speed – 2nd step	
Y21	- Solenoid valve for threshing engagement	
Y35	- Solenoid valve for grain tank unloading	
Y52	- Solenoid valve for moisture measuring	
Y59	- Solenoid valve for servo line	
Y76	- Solenoid valve for chopper engagement	
Y88	- Solenoid valve for front attachment engagement	
Z46	- Oil pressure switch	12 bar
T	- Connection to tank	
P	- Connection to charge pump for ground drive	
P1	- Connection for 3D sieve box and moisture measuring	
S	- Connection to grease brush for grain tank unloading	

Function problems

A problem in the low pressure system is usually down to the fact that one of the components is leaking oil either internally or externally. In order to find the fault it is necessary to connect a test gauge to the system and then engage each individual service. The one where the pressure is lost is the one at fault.

Note: The restrictor (412) is in the system to reduce the oil flow to between **5 and 7 l/min**. This ensures that even with large leakage in the system, the charge pump for the ground drive should not be starved of oil.

https://truckmanualshub.com/

6.3 Low-pressure hydraulic system circuit diagram

(up to 466-0165 / 454-0255 / 453-0041 / 452-0016)

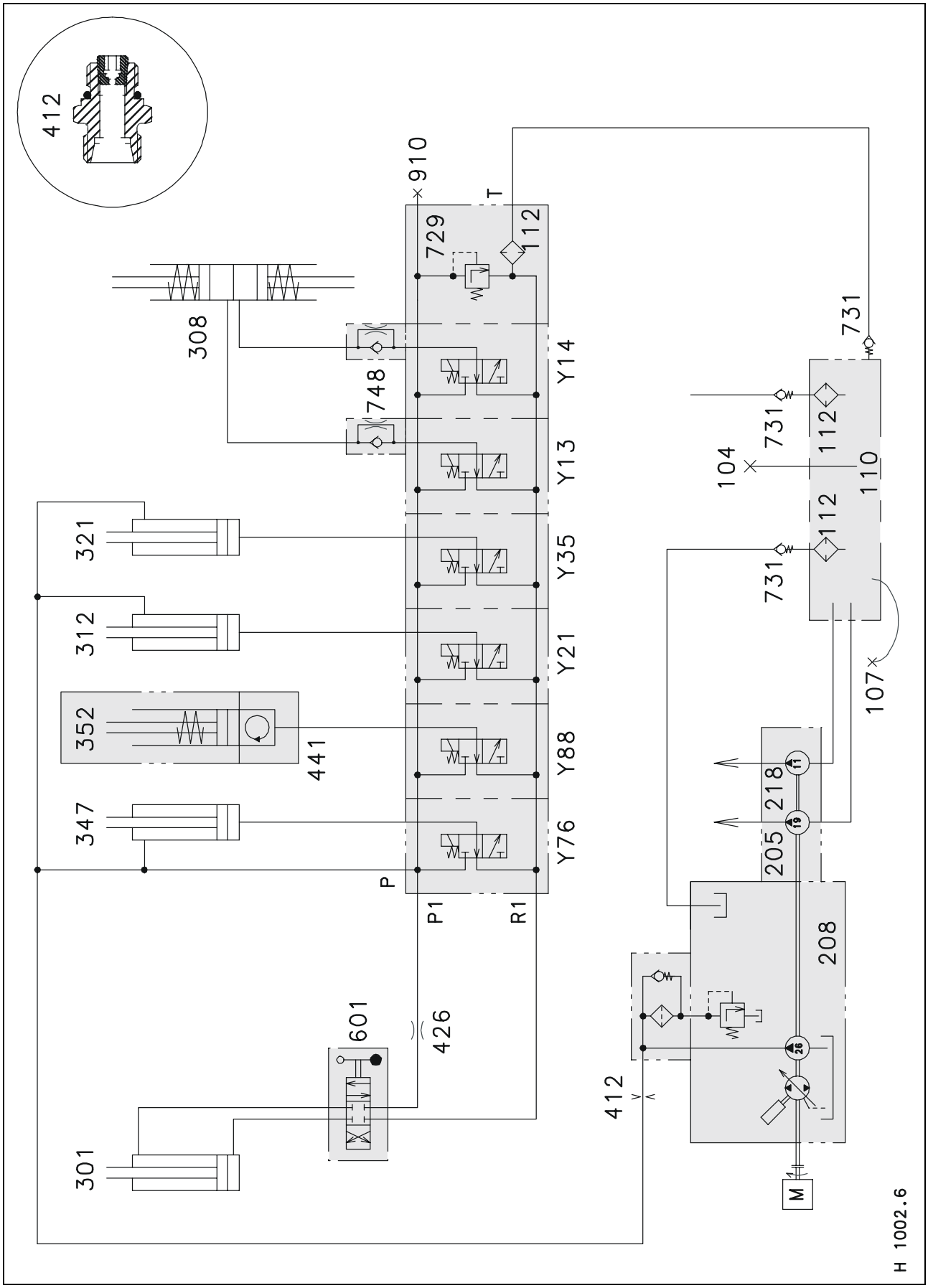

https://truckmanualshub.com/

Key to diagram

104	- Tank vent
107	- Oil drain
110	- Oil tank
112	- Working hydraulics sieve filter
205	- Gear pump for working hydraulics . . . . . 14 cm³
208	- Axial piston pump for hydrostatic ground drive
218	- Gear pump for steering hydraulics . . . . . 11 cm³
301	- Hydraulic ram for 3D sieve box . . . . . Ø 50/10 mm
308	- Hydraulic ram for diesel engine rpm
312	- Hydraulic ram for threshing engagement . . . . Ø 50/40 mm
321	- Hydraulic ram for grain tank unloading . . . . . Ø 40/30 mm
347	- Hydraulic ram for chopper engagement
352	- Hydraulic ram for front attachment engagement
412	- Restrictor . . . . . Ø 2 mm
426	- Bolt with restrictor hole . . . . . Ø 0.8 mm
441	- Rotary coupling
601	- Pendulum valve 3D sieve box
729	- Pressure relief valve . . . . . 19^{+4} bar
731	- One-way valve
748	- One-way restrictor . . . . . Ø 0.8 mm
910	- Test port
Y13	- Solenoid valve for engine speed – 1st step
Y14	- Solenoid valve for engine speed – 2nd step
Y21	- Solenoid valve for threshing engagement
Y35	- Solenoid valve for grain tank unloading
Y76	- Solenoid valve for chopper engagement
Y88	- Solenoid valve for front attachment engagement
Z46	- Oil pressure switch . . . . . 12 bar
T	- Connection to tank
P	- Connection to charge pump for ground drive
P1	- Connection for 3D sieve box and moisture measuring

Function problems

A problem in the low pressure system is usually down to the fact that one of the components is leaking oil either internally or externally. In order to find the fault it is necessary to connect a test gauge to the system and then engage each individual service. The one where the pressure is lost is the one at fault.

Note: The restrictor (412) is in the system to reduce the oil flow to between **5 and 7 l/min**. This ensures that even with large leakage in the system, the charge pump for the ground drive should not be starved of oil.

https://truckmanualshub.com/

6.4 Layout of components

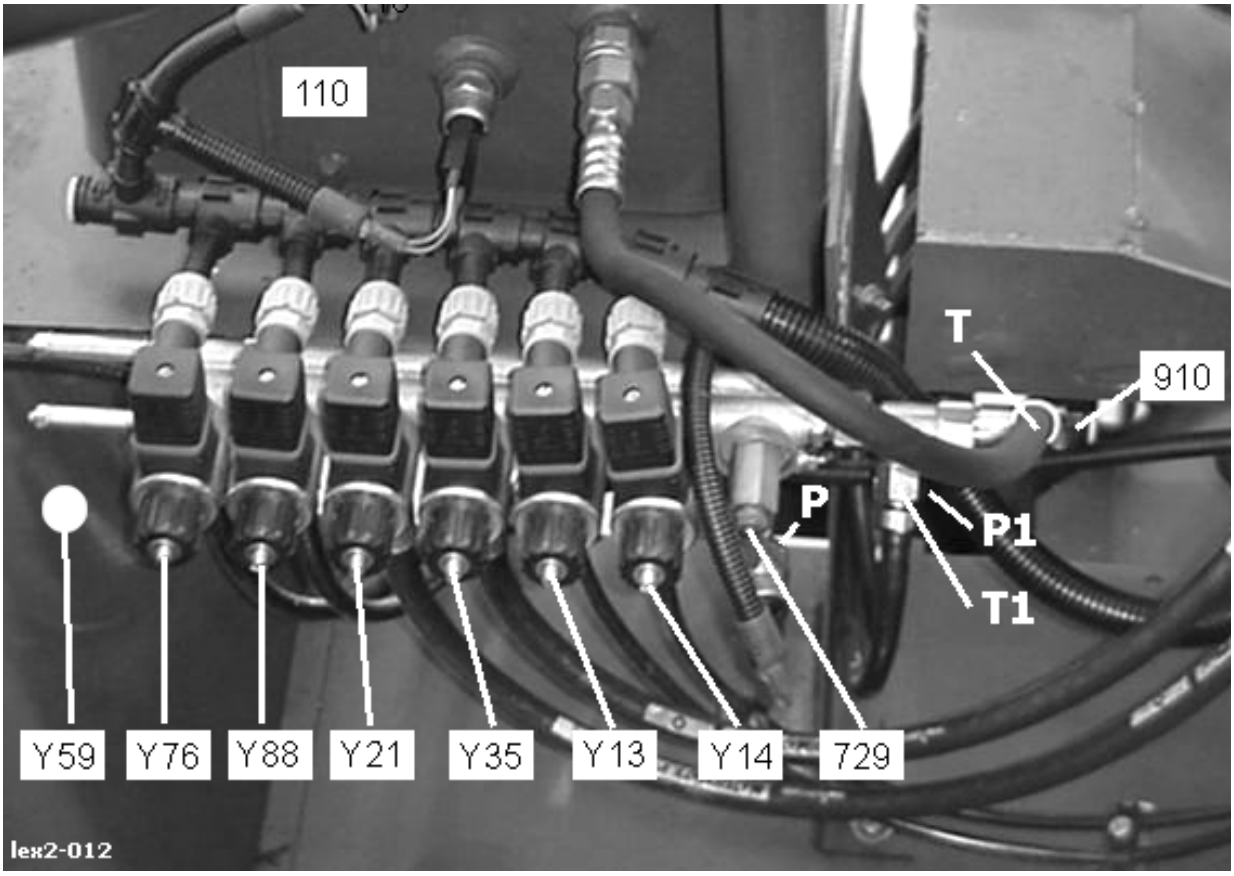

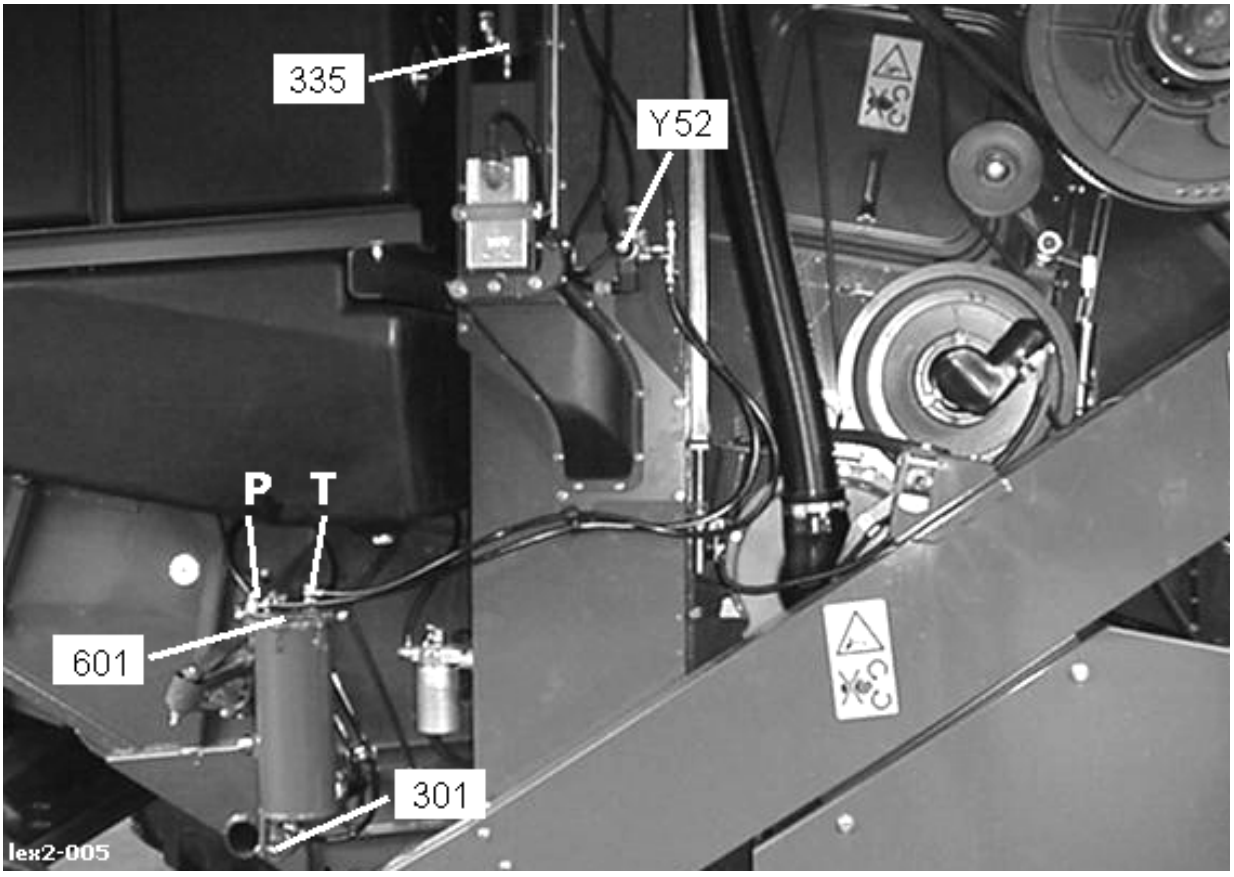

https://truckmanualshub.com/

Key to diagram

110	- Oil tank
301	- Hydraulic ram for 3D sieve box . . . . . Ø 50/10 mm
335	- Hydraulic ram for moisture measuring
601	- Pendulum valve 3D sieve box
729	- Pressure relief valve (mounted on tank from year 2001 on) . . . . . 19^{+4} bar
910	- Test port
Y13	- Solenoid valve for engine speed – 1st step
Y14	- Solenoid valve for engine speed – 2nd step
Y21	- Solenoid valve for threshing engagement
Y35	- Solenoid valve for grain tank unloading
Y52	- Solenoid valve for moisture measuring
Y59	- Solenoid valve for servo line
Y76	- Solenoid valve for chopper engagement
Y88	- Solenoid valve for front attachment engagement
T	- Connection to tank
P	- Connection to the charge pump of the hydrostatic drive
T1	- Return flow from the 3D sieve box and moisture meter
P1	- Connection for the 3D sieve box and moisture meter

https://truckmanualshub.com/

6.5 Low pressure valves (from: 466-0166 / 454-0256 / 453-0042 / 452-0017)

Solenoid valve (3/2 way) for all switching functions

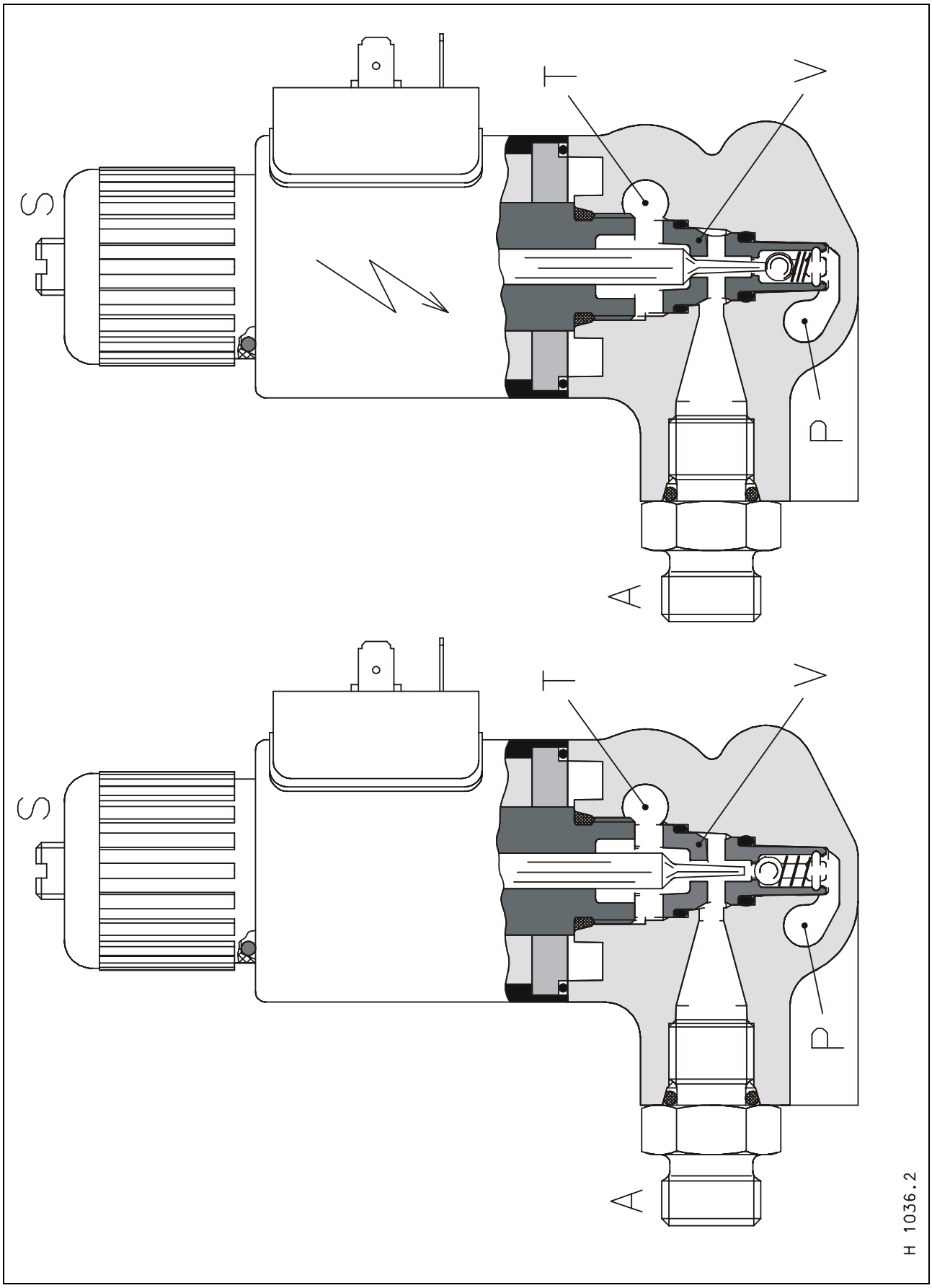

https://truckmanualshub.com/

Key to diagram

729 - Pressure relief valve
(mounted on tank from year 2001 on) . . . . . 19^{+4} bar

T - Connection to tank
P - Connection to the charge pump of the hydrostatic drive
A - Connection to the hydraulic ram
V - Valve insert
S - Screw for emergency operation

Function

When the solenoid is switched off, the flow of oil comes from the ram (A) through the valve unit (V) and back to tank (T). The low pressure (P) is effectively locked by the ball in the valve insert (V).

When the solenoid is energised, the ball is pressed off its seat within the valve insert (V) and closes the flow back to tank (T). The low pressure (P) then flows through the valve and out of the port (A).

Note: In an emergency, the screw (S) can be used to press the ball off its seat and to close the return to tank (T).

Pressure relief valve

A - from 2001
B - up to 2002

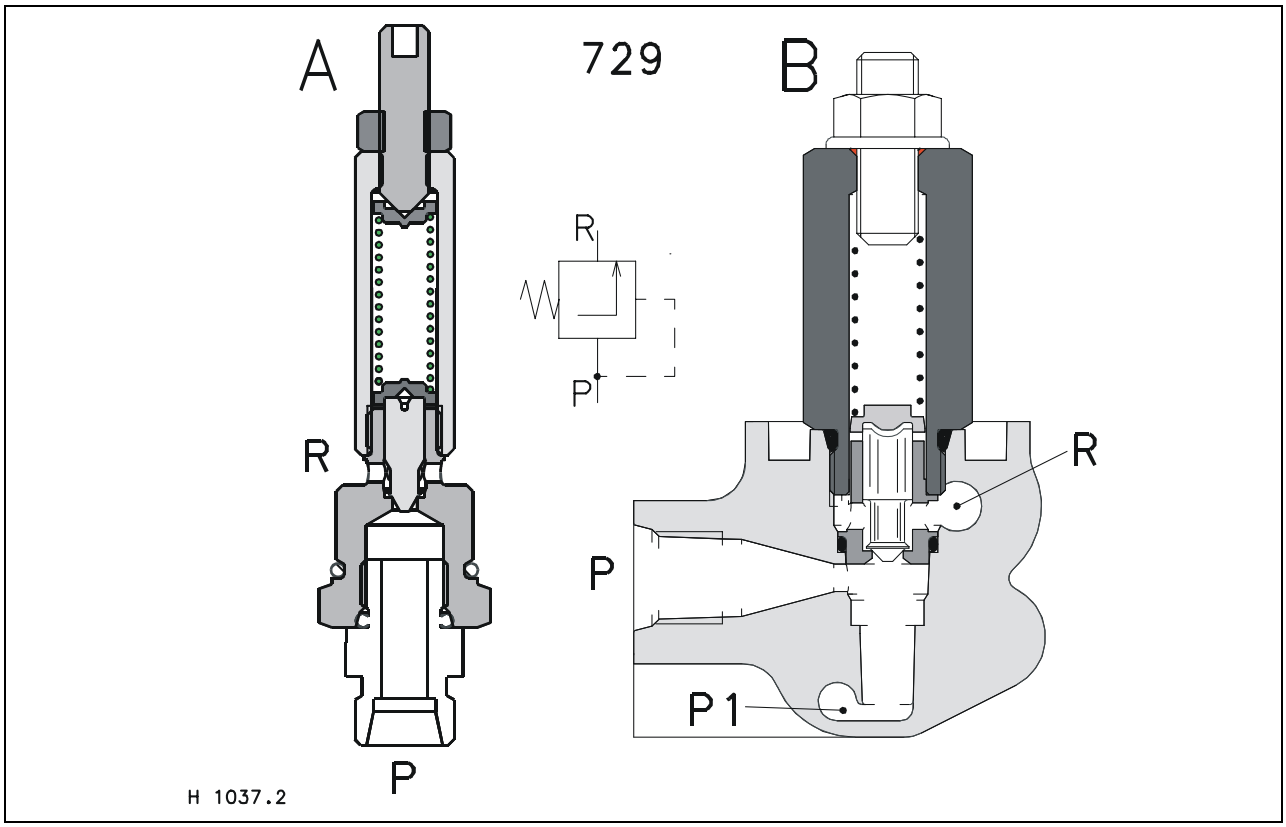

https://truckmanualshub.com/

Valves for low pressure hydraulics (to: 466-0165 / 454-0255 / 453-0041 / 452-0016)
Solenoid valve (3/2 way) for all switching functions

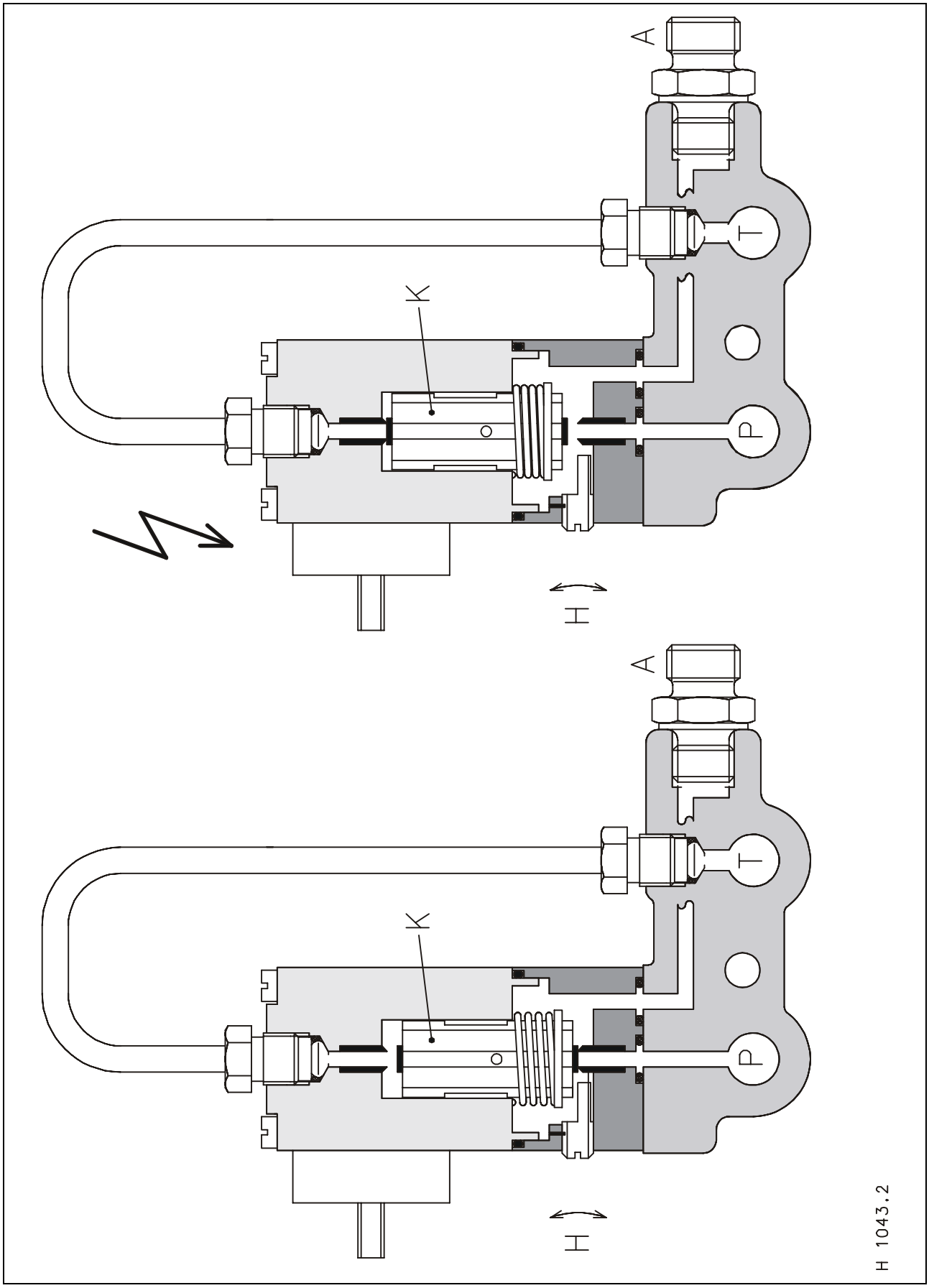

https://truckmanualshub.com/

Key to diagram

112 - Filter cartridge
729 - Pressure relief valve . . . . . 19 $^{+4}$ bar

T - Connection to tank
P - Connection to the charge pump of the hydrostatic drive
A - Connection to the hydraulic ram
K - Plunger
H - Eccentric pin for emergency use

Function

When the solenoid valve is not energised, then the connection from the ram (A) and the return to tank (T) is opened via the notches in the plunger (K). The low pressure (P) is sealed by the end of the plunger (K).

When the solenoid is energised, the plunger (K) is raised against the pressure of the spring and therefore opens the pressure line (P) and closes the return to tank (T) line. The oil then passes out through the port (A) and the return to tank (T) is locked.

Note: In an emergency, the eccentric pin (H) can be turned about 90°. Please ensure that the stop for the eccentric pin (H) is not passed as it will be sheared off and be forced out of the housing by the oil pressure.

Pressure relief valve with filter cartridge (to: 466-0165 / 454-0255 / 453-0041 / 452-0016)

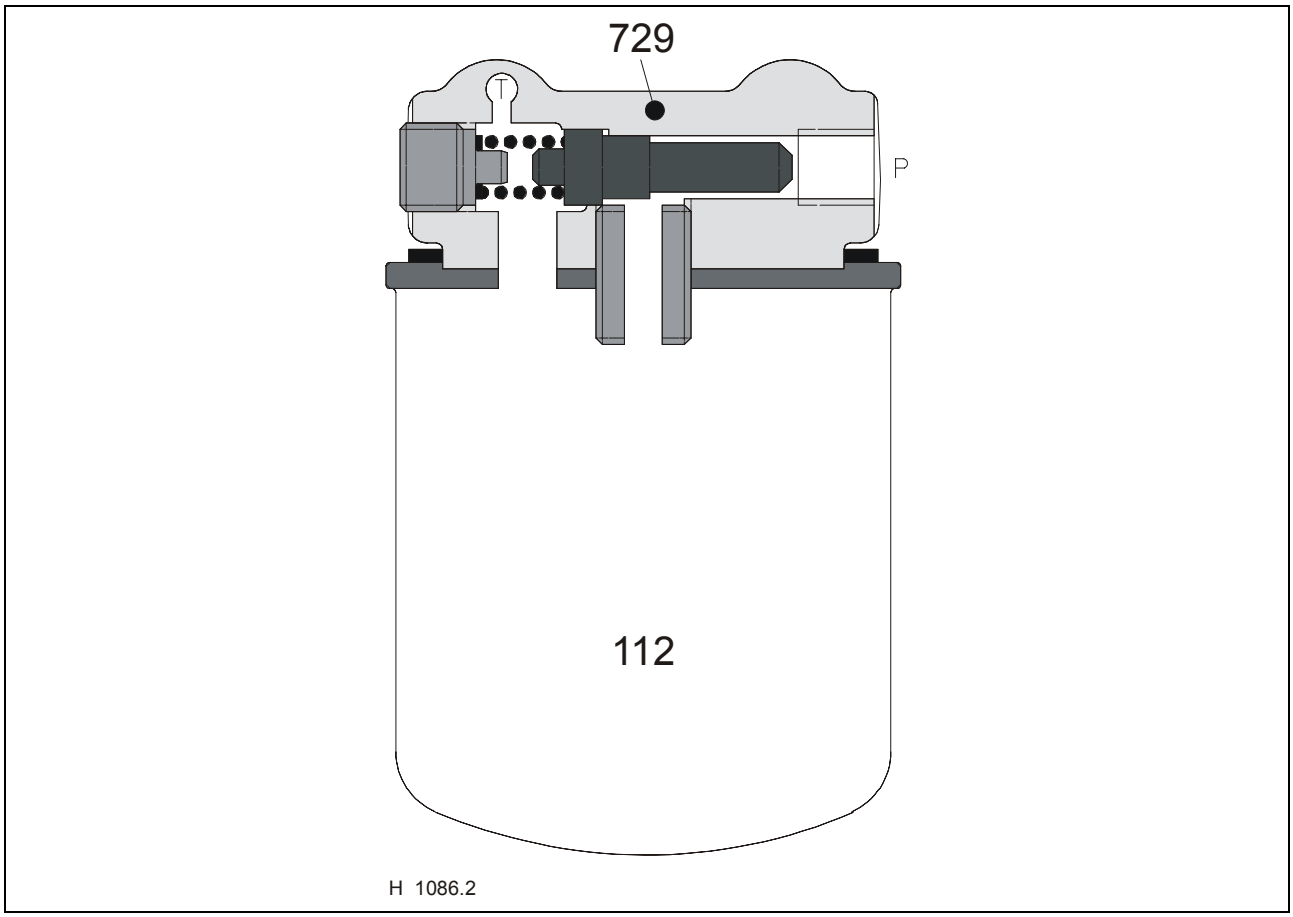

https://truckmanualshub.com/

6.6 3D sieve box control

3D pendulum valve (4/3 way) and hydraulic ram

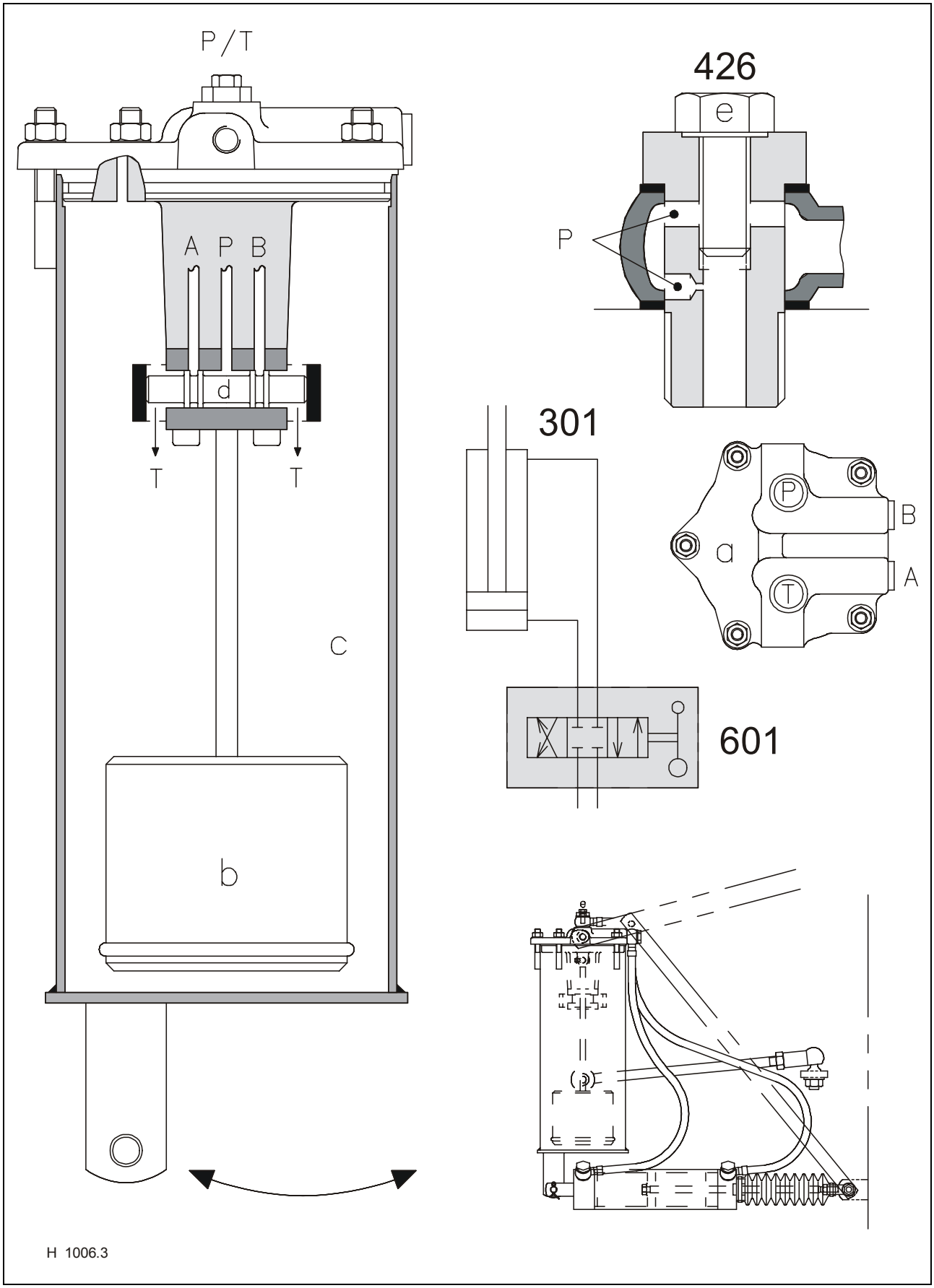

https://truckmanualshub.com/

Key to diagram

301 - Hydraulic ram for 3D sieve box . . . . . Ø 50/10 mm
426 - Screw with restrictor hole . . . . . Ø 0.8 mm
601 - Pendulum valve for 3D sieve box

T - Connection to tank
P - Connection to charge pump for hydrostatic drive
A - Hydraulic ram port for 3-D sieve box
B - Hydraulic ram port for 3-D sieve box
a - Cover
b - Pendulum
c - Housing
d - Control spool
e - Bleeding screw (M6 x 16)

Function

As soon as the machine moves onto a slope, the angle of the pendulum housing (c) and the position of the control spool (d) also changes. The pendulum itself (b) always remains horizontal. This causes the oil (P) to flow to one side (A/B) of the hydraulic ram(301), with the second side being connected back to tank (T) via the pendulum housing (C).
The hydraulic ram (301) moves the pendulum so that the housing is back in the vertical position, and the valve (601) is back in the neutral position.
The pendulum housing (c) is connected to the sieve box by a mechanical link. The angle of the slope plays a direct relation on the amount of movement by the pendulum housing.

Bleeding the 3D system

When filling or bleeding the pendulum housing, firstly slacken off the bleed screw (e) so that the oil can flow out unrestricted. With the connecting rod disconnected, and the engine on tick over, the pendulum housing (C) can be swung until all the air has been removed.

Note: When the system is in operation, the large hole in the screw (426) must be closed, otherwise the housing (C) will be forced against the end stop by the uncontrolled oil flow.

https://truckmanualshub.com/

6.7 Front end attachment drive
Hydraulic ram with rotary coupling

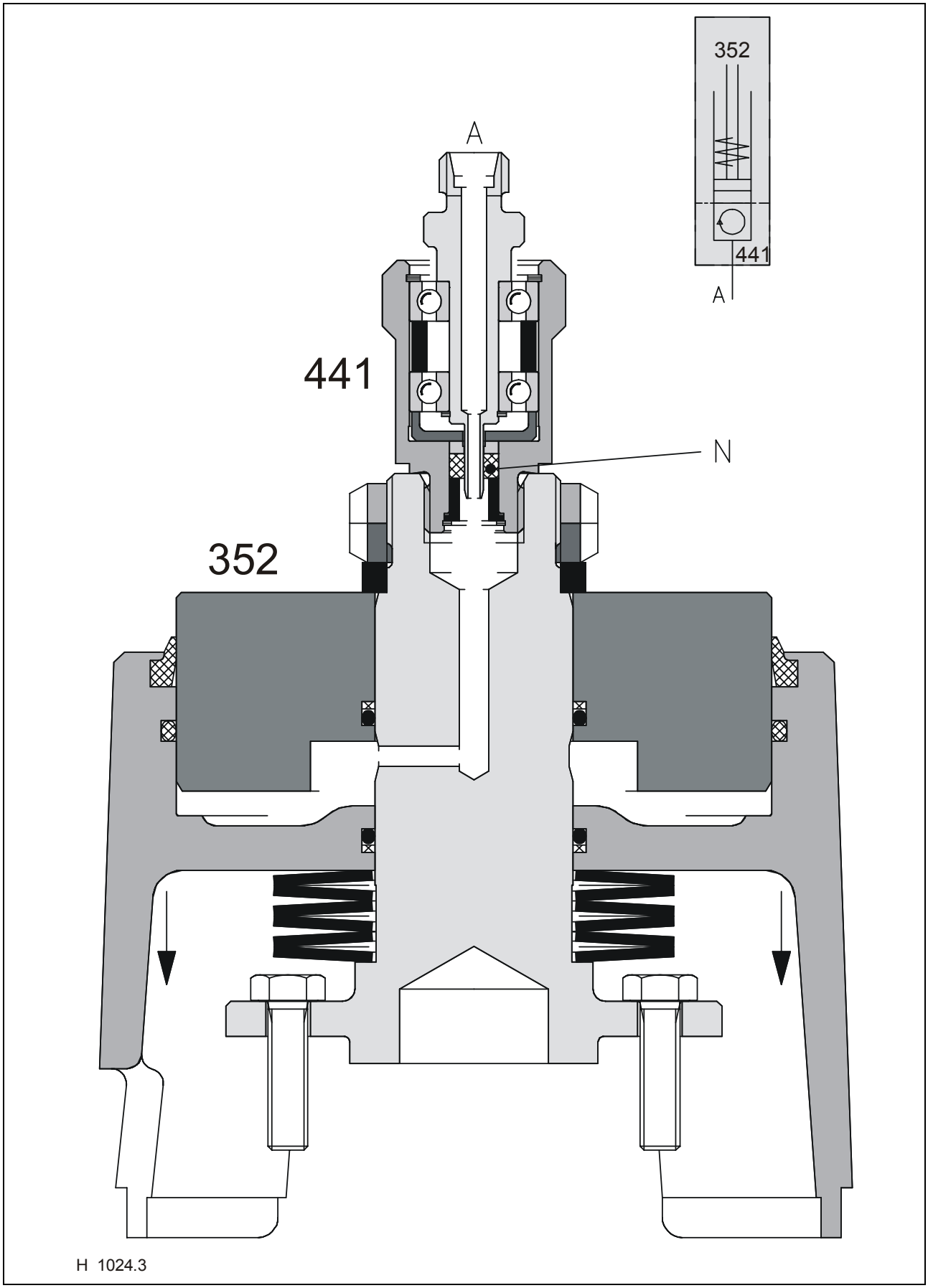

https://truckmanualshub.com/

Key to diagram

352	- Hydraulic ram for cutterbar engagement
441	- Rotary coupling
A	- Solenoid valve port for front attachment engagement
N	- Seal

https://truckmanualshub.com/

6.8 Diesel engine speed (Mechanically controlled diesel engine)
Doube hydraulic ram

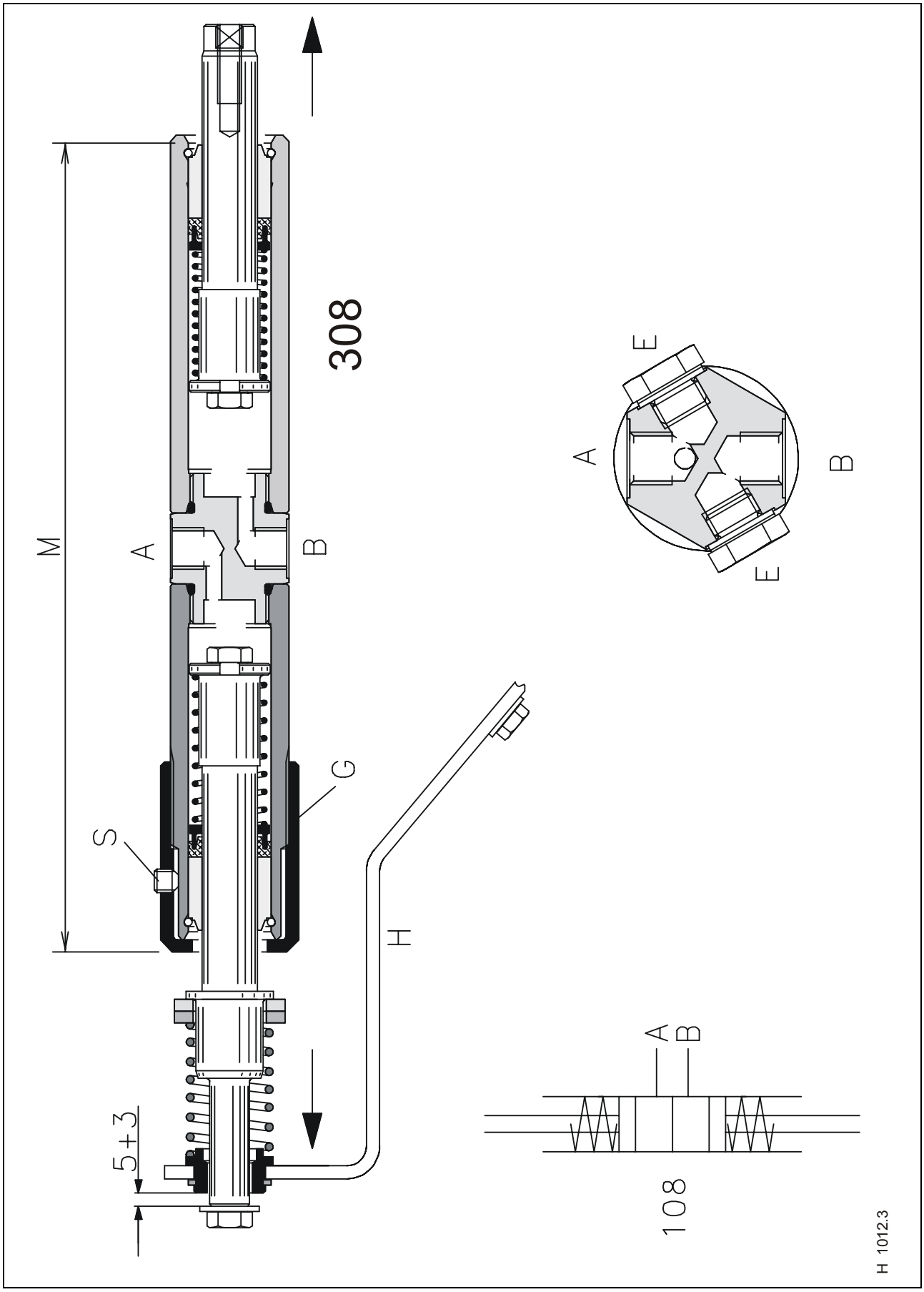

https://truckmanualshub.com/

Key to diagram

308 - Hydraulic ram for engine speed

A - Solenoid valve port for diesel engine speed – 1st step
B - Solenoid valve port for diesel engine speed – 2nd step
E - Bleeding screw
H - Lever on the injection pump
G - Threaded cap
S - Securing screw

M - Setting distance

Settings

1. The basic setting for the hydraulic ram (308) is

   M = 208 mm for 20 Km/h configuration
   M = 220 mm for 25 Km/h configuration

2. With the engine in the upper idle speed, the play on the lever (H) from the injection pump should be **5^{+3} mm**. This is important, so that it is free when the engine moves slightly.

3. When the machine is put into third gear, the relevant engine speed and machine type needs to be set. Adjust the threaded cap (G) and secure with the securing screw (S).

LEXION Machine type	20 Km/h option	25 Km/h option
480/460/450/440	1,560±20 min^{-1}	1,950±20 min^{-1}
430/420	1,970±20 min^{-1}	2,320±20 min^{-1}
415/410/405	1,930±20 min^{-1}	2,410±20 min^{-1}

Note: With machines that hunt, the problem can be the fact that there is air in the ram. To correct this problem, the cylinder can be bled at the bleeding srew (E).

https://truckmanualshub.com/

6.9 Servo line
Hydraulic ram in drive cover

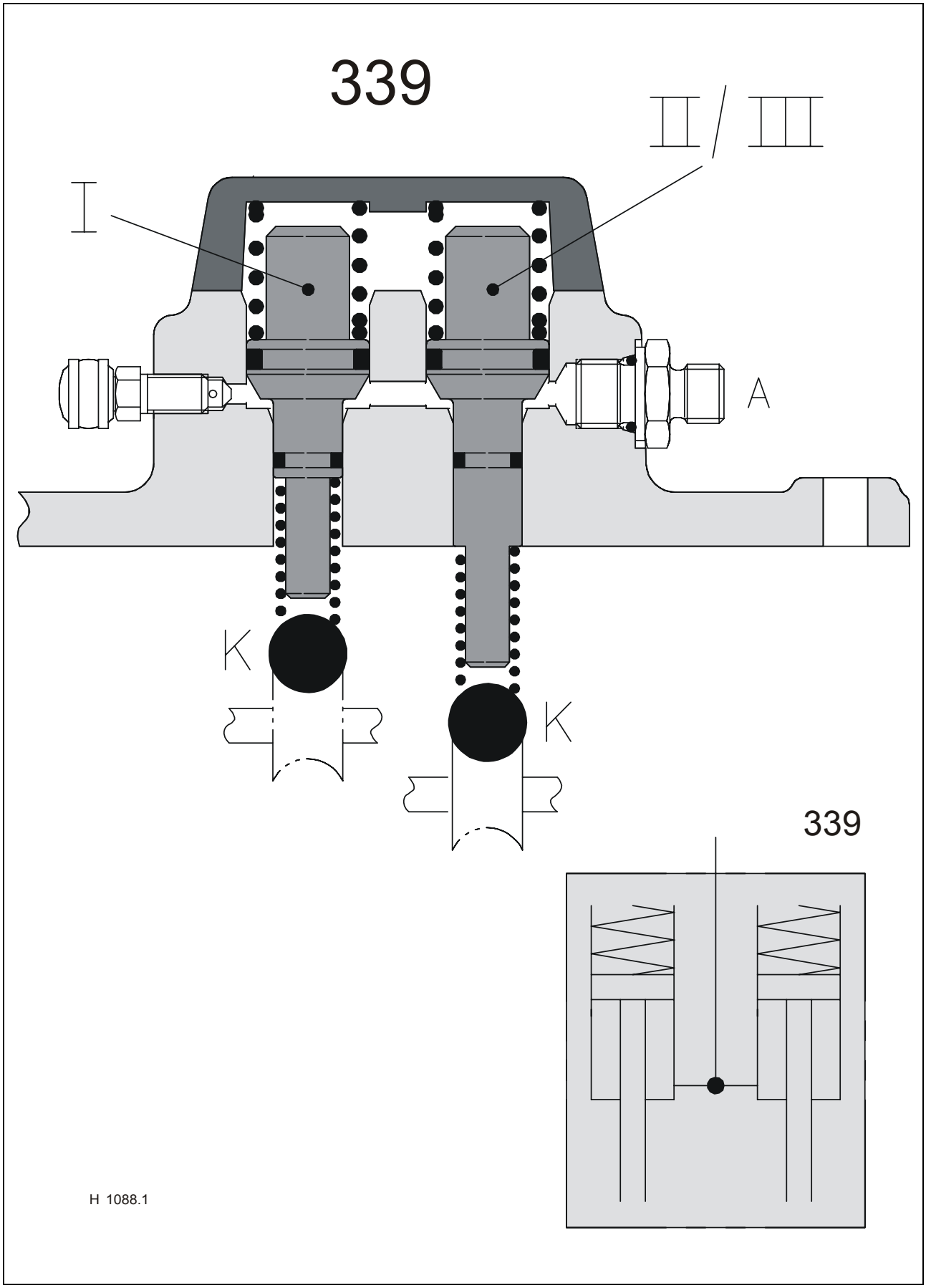

https://truckmanualshub.com/

Key to diagram

339	- Hydraulic ram for servo line
A	- Solenoid valve port for servo line
K	- Indent ball
I	-1st gear
II/III	-2nd and 3rd gear

Function

When the solenoid valve is switched, the indent ball K releases the selecting rod from the high pressure of the hydraulic motor.

https://truckmanualshub.com/

6.10 Chain greasing for the unloading system
Grease pump with container

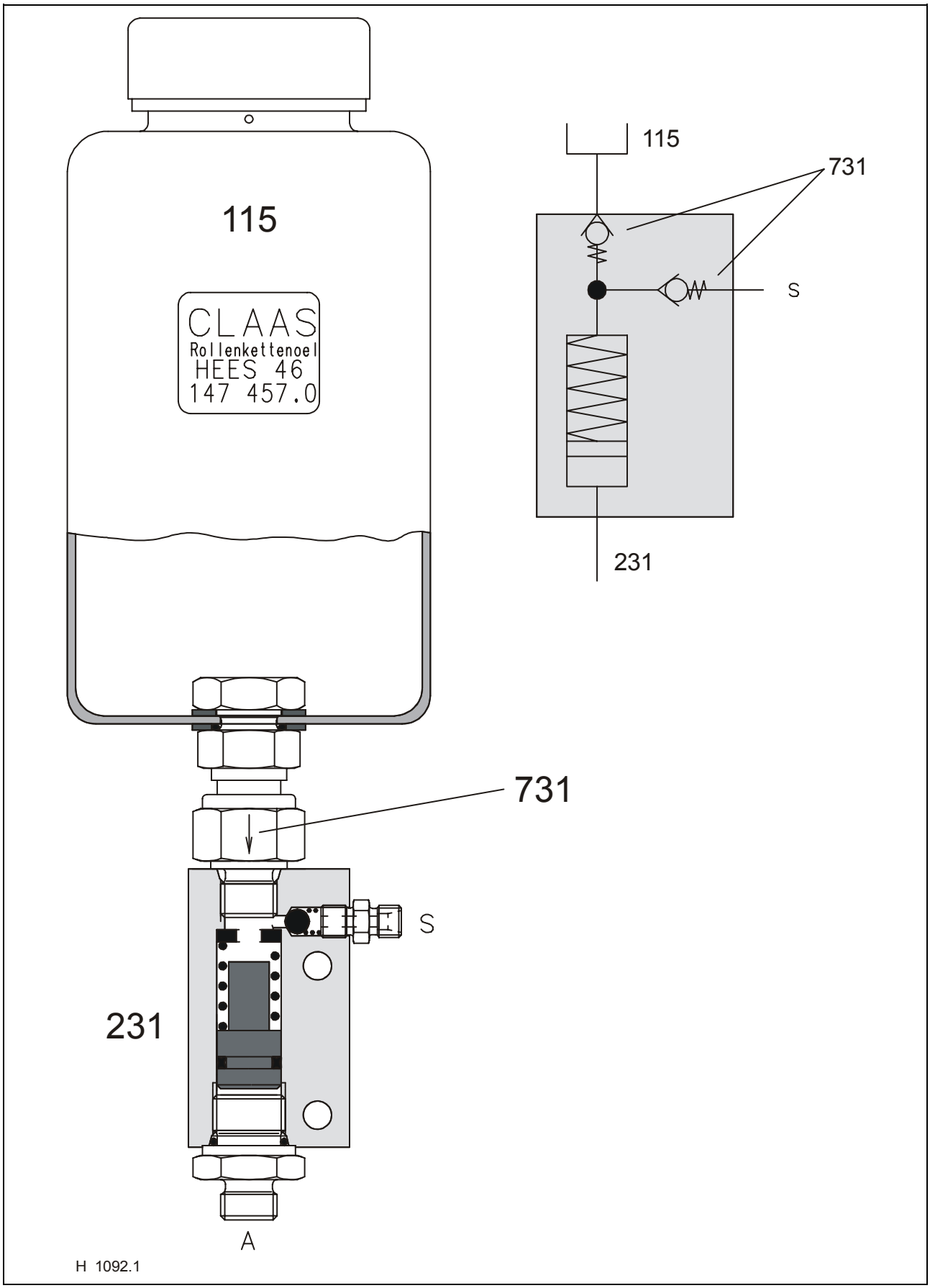

https://truckmanualshub.com/

Key to diagram

115 - Grease reservoir for grain tank unloading
231 - Grease pump for grain tank unloading
731 - One-way valve

A - Connection to the solenoid valve for the grain tank unloading system
S - Connection to the greasing brush

Function

When the grain tank unloading system is energised, the grease pump (231) supplies the grease brush with a delivery of oil. When switched off, the spring pushes back the ram which switches off the oil supply from the reservoir (115). The one-way valve (731) separates the suction and pressure sides.

https://truckmanualshub.com/

Contents

SAUER hydrostatic drive

7.1 Circuit diagram for the SAUER hydrostatic drive 7-2
7.1.1 without ground drive hydraulic motor brake restrictor (HBM) 7-2
7.1.2 with ground drive hydraulic motor brake restrictor (HBM) 7-4

7.2 Circuit diagram for the 4-Trac drive 7-6

7.3 Layout of components 7-8

7.4 Measurement ports LEXION 480-440 7-12
Pressure settings 7-13
Charge pressure relief valve 7-13
Multifunction valve 7-13
Purge valve 7-13

Measurement ports LEXION 430-405 7-14
Pressure settings 7-15
Charge pressure relief valve 7-15
Multifunction valve 7-15
Purge valve 7-15

7.5 System components 7-18
Oil supply 7-19
Charge pressure circuit 7-19
Servo adjustment 7-19
High-pressure circuit 7-21
Pressure cut-off 7-21
High-pressure control 7-21
Purge control 7-21

7.6 Pump 7-22
Function 7-23
Servo control valve 7-24
Multifunction valve 7-24

7.7 Motor 7-26
Function 7-27

7.8 4-Trac drive 7-28
Valve unit 7-28
Radial piston motor 7-30

7.9 Ground drive hydraulic motor brake restrictor controller (HBM) 7-32
Description of function 7-33

7.10 Maintenance 7-34
Filling instructions 7-34
Test instructions 7-34

7.11 Diagnostics 7-36
No neutral position on the gearbox 7-36
The gearbox only works in one direction 7-36
Gearbox overheating 7-37
Gearbox fails in both directions 7-38
Gearbox is lazy 7-40

https://truckmanualshub.com/

7.1 Circuit diagram for the SAUER hydrostatic drive

7.1.1 Without ground drive hydraulic motor brake restrictor (HBM)

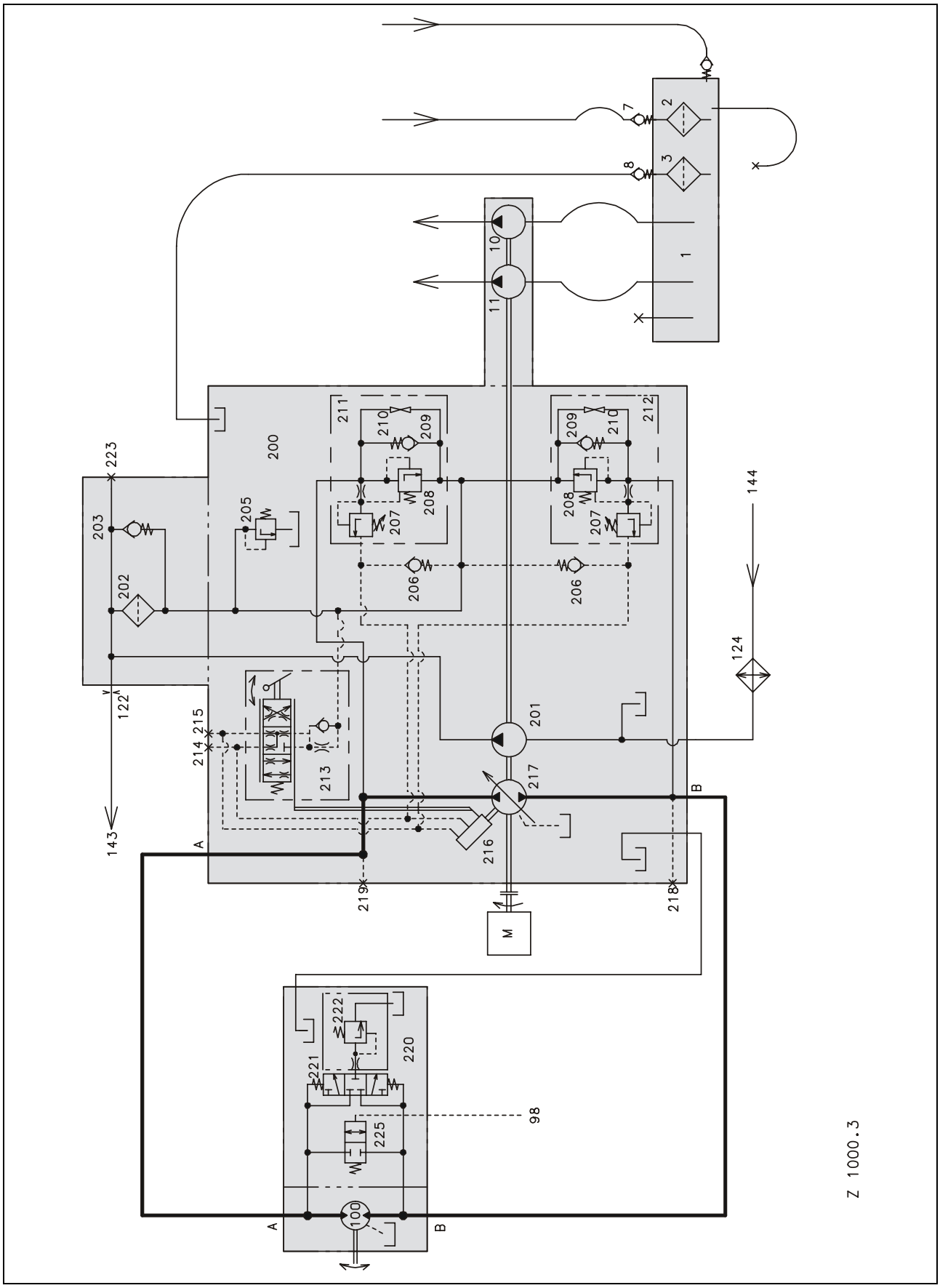

https://truckmanualshub.com/

Key to diagram

1	- Oil tank
2	- Sieve filter for the working hydraulics
3	- Sieve filter for the hydrostatic drive and steering
7	- Return oil one-way valve for the working hydraulics . . . . . 0.1 bar
8	- Return oil one-way valve for the hydrostatic drive . . . . . 0.1 bar
10	- Gear pump for the steering . . . . . 11 cm³
11	- Gear pump for the working hydraulics . . . . . 19 or 14 cm³
98	- Solenoid valve for the servo line
122	- Restrictor . . . . . Ø 2 mm
124	- Oil cooler
143	- Connection for the low pressure hydraulics
144	- Connection for the return flow from the steering
200	- Pump housing . . . . . 90 R 100/130
201	- Charge pump . . . . . 26 cm³
202	- Filter cartridge . . . . . 10 µm
203	- By pass valve . . . . . 3 bar
205	- Charge pump pressure relief valve . . . . . 30 ± 2.5 bar
206	- Control pressure, pressure relief valve . . . . . 7 bar
207	- Pressure override valve . . . . . 420^{+30} bar
208	- High pressure, pressure relief valve . . . . . +30 bar
209	- Check valve . . . . . 0.7 bar
210	- Short circuit valve
211	- Multifunction valve – reverse
212	- Multifunction valve – forwards
213	- Servo control valve
214	- Actuating pressure forward measuring port (M5)
215	- Actuating pressure backward measuring port (M4)
216	- Servo ram
217	- Axial ram adjustable pump . . . . . 100/130 cm³
218	- High pressure forward measuring port (M1)
219	- High pressure backward measuring port (M2)
220	- Fixed displacement motor . . . . . 100 cm³
221	- Shuttle valve
222	- Purge valve
223	- Feed pressure measuring port (M3)
225	- Short circuit valve for the servo line (optional)

Note: The short circuit valve (225) in the fixed displacement motor (220) is only fitted when the machine is supplied with an hydraulic servo line.
The short circuit valve (225) is operated for the switching line by the low pressure hydraulics (98). This enables both sides of the high pressure lines to short together, so that the drive control rods are unloaded during switching.

https://truckmanualshub.com/

7.1.2 With ground drive hydraulic motor brake restrictor (HBM)

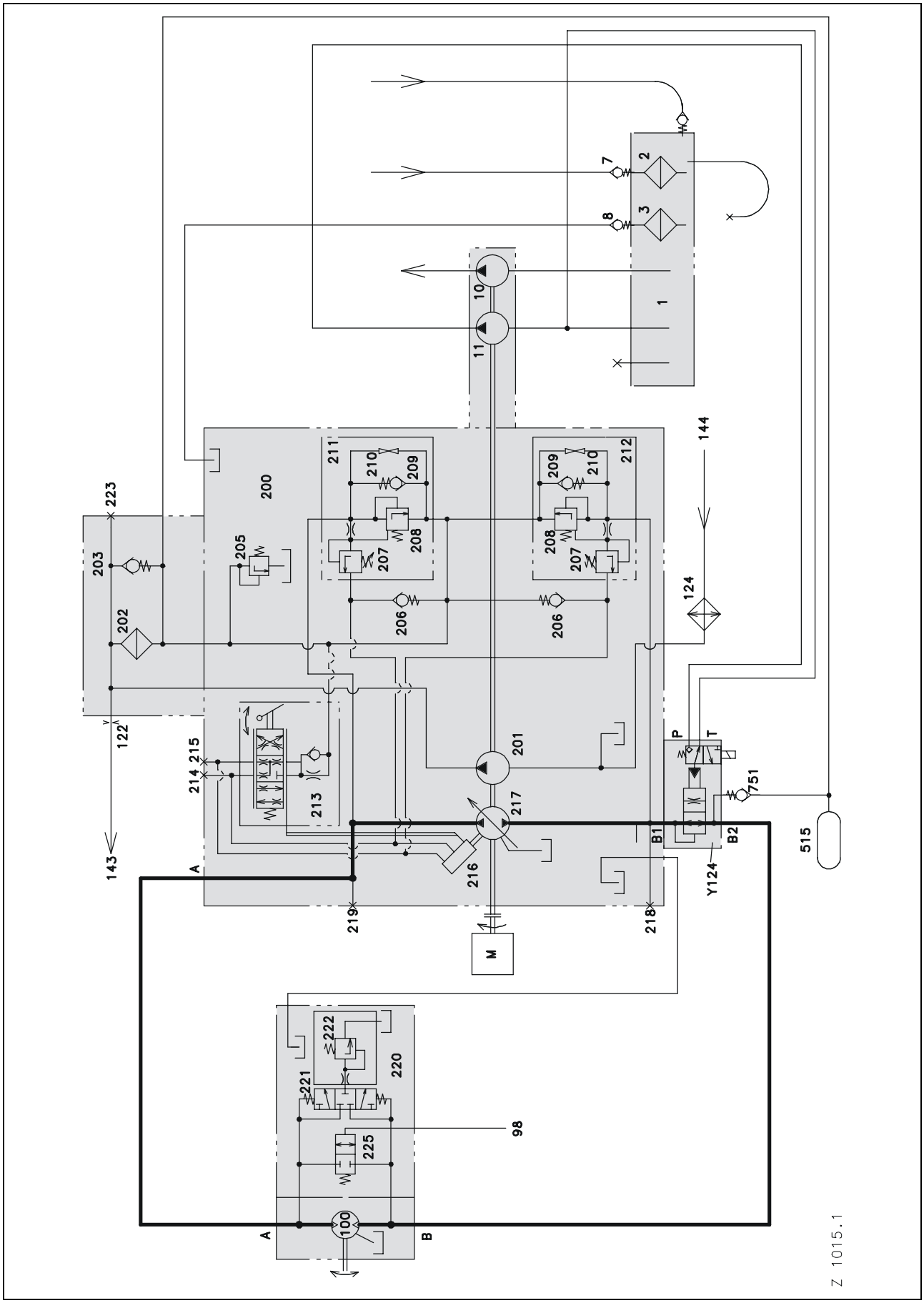

https://truckmanualshub.com/

Key to diagram

1	- Oil tank
2	- Sieve filter for the working hydraulics
3	- Sieve filter for the hydrostatic drive and steering
7	- Return oil one-way valve for the working hydraulics . . . . . 0.1 bar
8	- Return oil one-way valve for the hydrostatic drive . . . . . 0.1 bar
10	- Gear pump for the steering . . . . . 11 cm³
11	- Gear pump for the working hydraulics . . . . . 19 or 14 cm³
98	- Solenoid valve for the servo line
122	- Restrictor . . . . . Ø 2 mm
124	- Oil cooler
143	- Connection for the low pressure hydraulics
144	- Connection for the return flow from the steering
200	- Pump housing . . . . . 90 R 100/130
201	- Charge pump . . . . . 26 cm³
202	- Filter cartridge . . . . . 10 µm
203	- By pass valve . . . . . 3 bar
205	- Charge pump pressure relief valve . . . . . 30 ± 2.5 bar
206	- Control pressure, pressure relief valve . . . . . 7 bar
207	- Pressure override valve . . . . . 420^{+30} bar
208	- High pressure, pressure relief valve . . . . . +30 bar
209	- Check valve . . . . . 0.7 bar
210	- Short circuit valve
211	- Multifunction valve – reverse
212	- Multifunction valve – forwards
213	- Servo control valve
214	- Actuating pressure forward measuring port (M5)
215	- Actuating pressure backward measuring port (M4)
216	- Servo ram
217	- Axial ram adjustable pump . . . . . 100/130 cm³
218	- High pressure forward measuring port (M1)
219	- High pressure backward measuring port (M2)
220	- Fixed displacement motor . . . . . 100 cm³
221	- Shuttle valve
222	- Purge valve
223	- Test port for charge pressure
225	- Short circuit valve for the servo line (optional)
515	- Pressure accumulator
751	- External feed valve (non-return valve)
Y124	- Ground drive hydraulic motor brake restrictor (HBM)

Note: The short circuit valve (225) in the fixed displacement motor (220) is only fitted when the machine is supplied with an hydraulic servo line.
The short circuit valve (225) is operated for the switching line by the low pressure hydraulics (98). This enables both sides of the high pressure lines to short together, so that the drive control rods are unloaded during switching.

https://truckmanualshub.com/

7.2 Circuit diagram for the 4-Trac drive

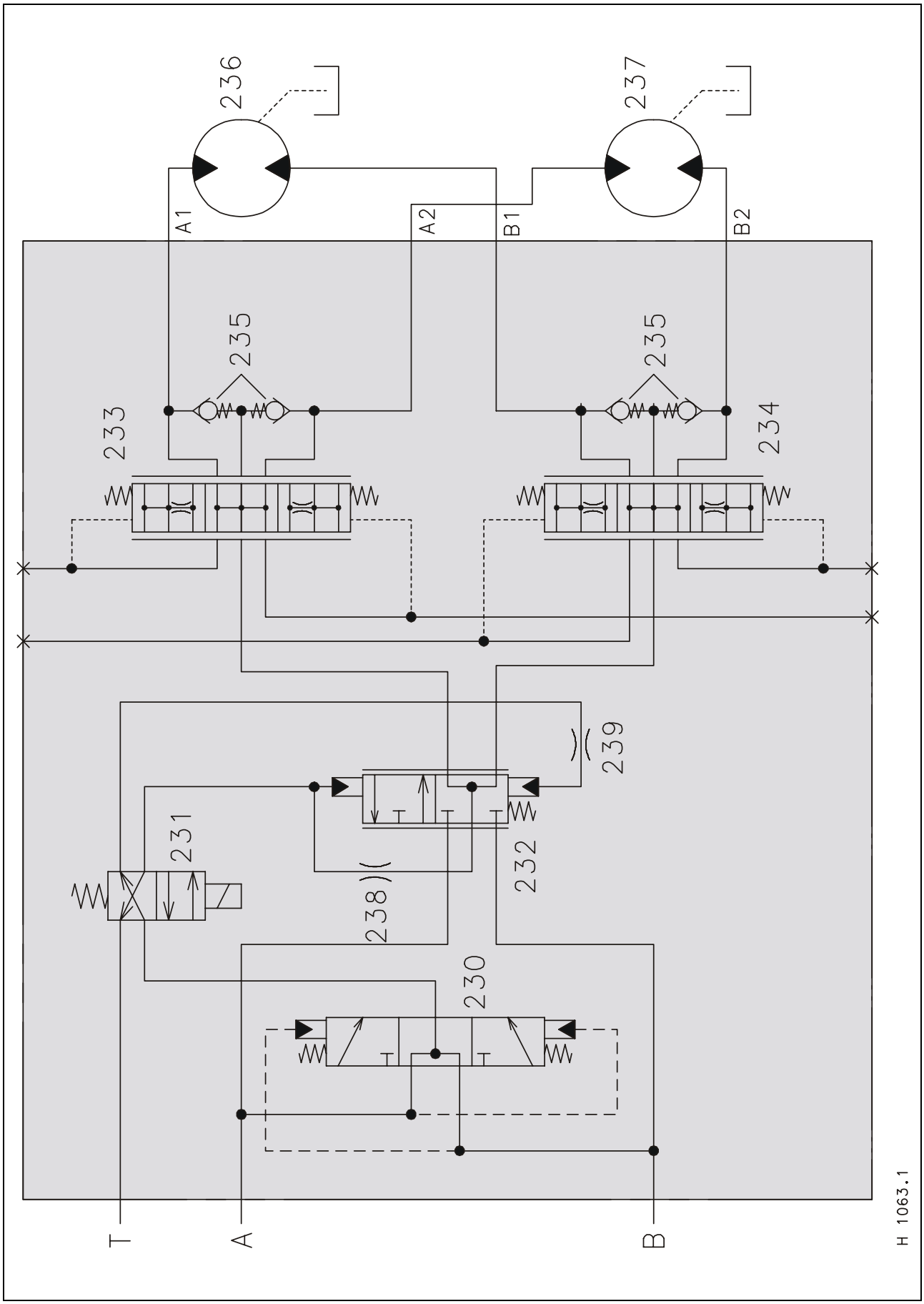

https://truckmanualshub.com/

Key to diagram

230	- Pilot control shuttle valve
231	- Solenoid valve for the four wheel drive control valve
232	- Main control valve for four wheel drive
233	- Forwards flow control valve
234	- Reverse flow control valve
235	- One way valve
236	- Radial piston motor right hand side . . . . . 1250 cm^3
237	- Radial piston motor left hand side . . . . . 1250 cm^3
238	- Engagement restrictor
239	- Disengagement restrictor
A	- Adjustable pump for forwards
A1	- Right hand forwards wheel motor
A2	- Left hand forwards wheel motor
B	- Adjustable pump for reverse
B1	- Right hand reversing wheel motor
B2	- Left hand reversing wheel motor
S	- Charge pressure
T	- Flow to tank

https://truckmanualshub.com/

7.3 Layout of components

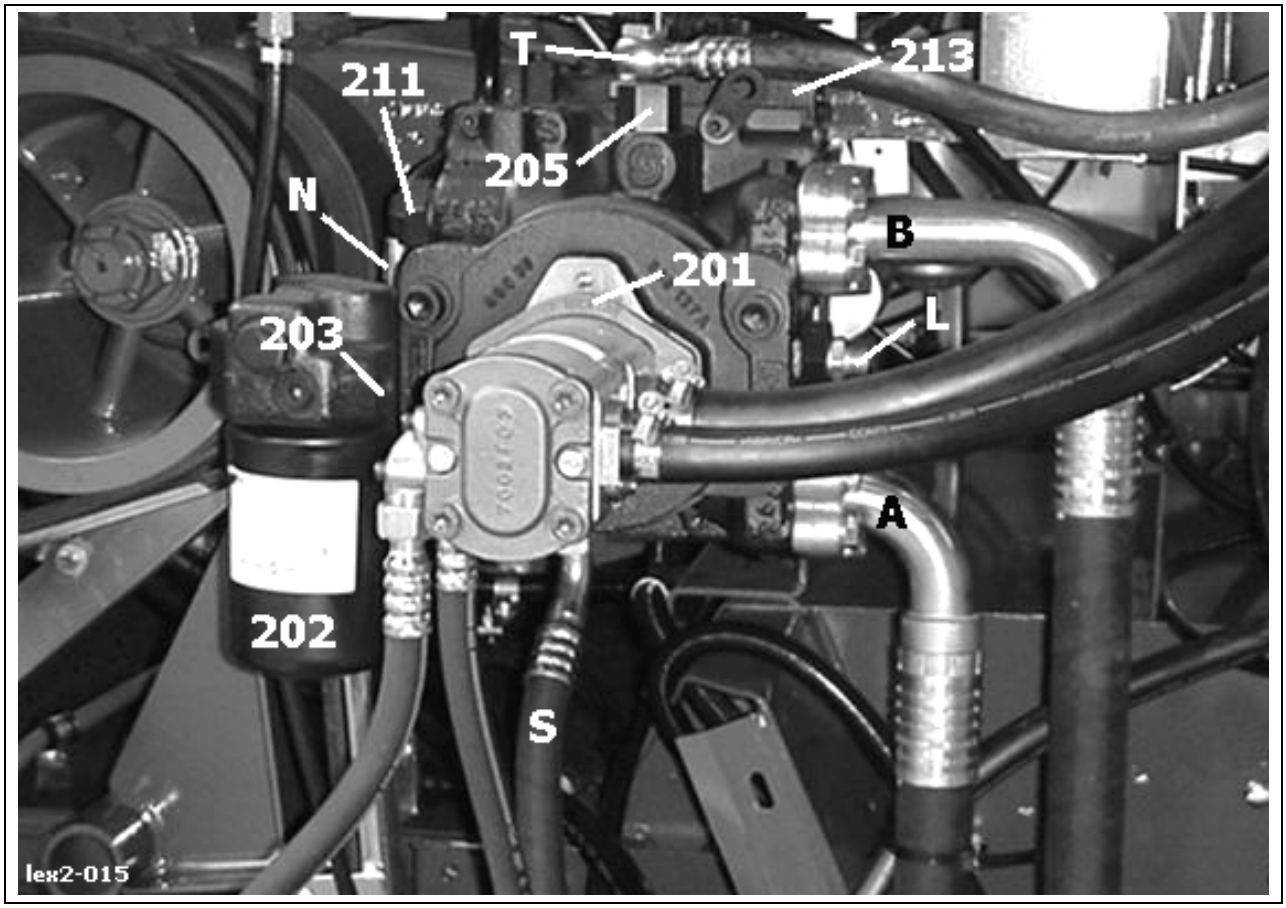

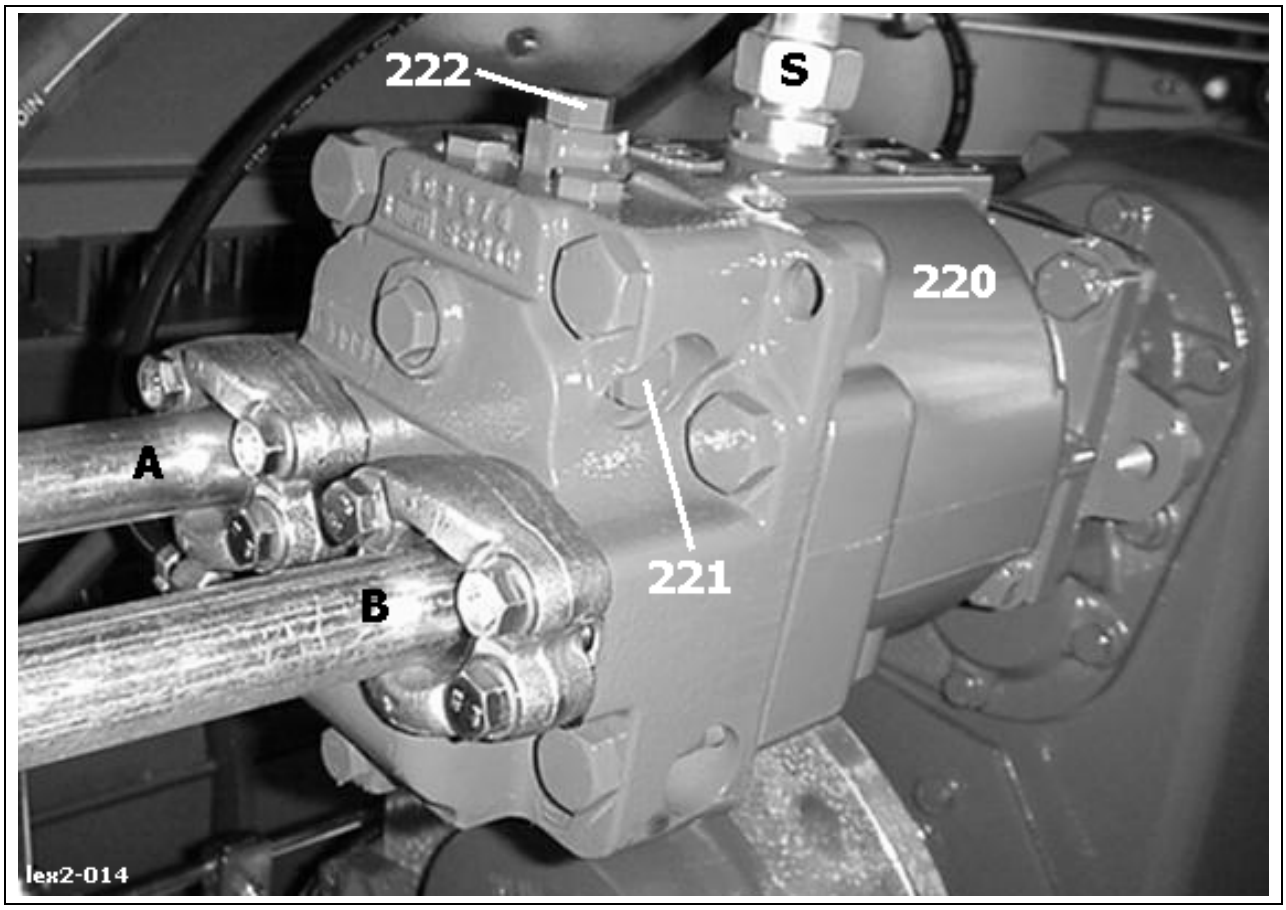

https://truckmanualshub.com/

Key to diagram

201	- Charge pump	26 cm³
202	- Filter cartridge	10 µm
203	- By pass valve	3 bar
205	- Charge pressure relief valve	30 ± 2.5 bar
211	- Multifunction valve reverse	
213	- Servo control valve	
220	- Fixed displacement motor	100 cm³
221	- Shuttle valve	
222	- Purge valve	

A	- Forwards high pressure
B	- Reverse high pressure
T	- Connection to tank
L	- Return flow from steering ram to oil cooler
S	- Additional and leaking oil from motor housing to pump housing
N	- Connection to low pressure hydraulics

https://truckmanualshub.com/

Layout of components

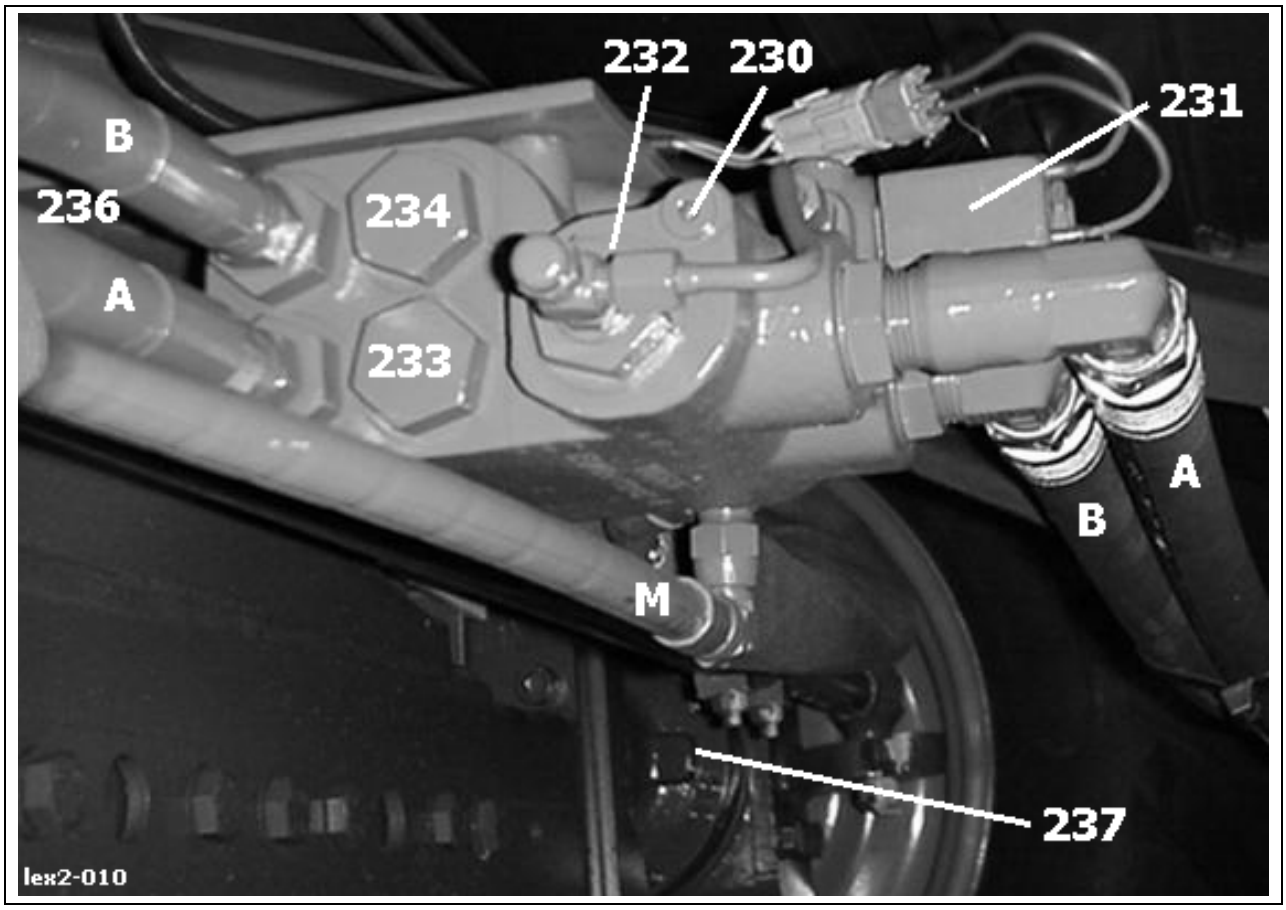

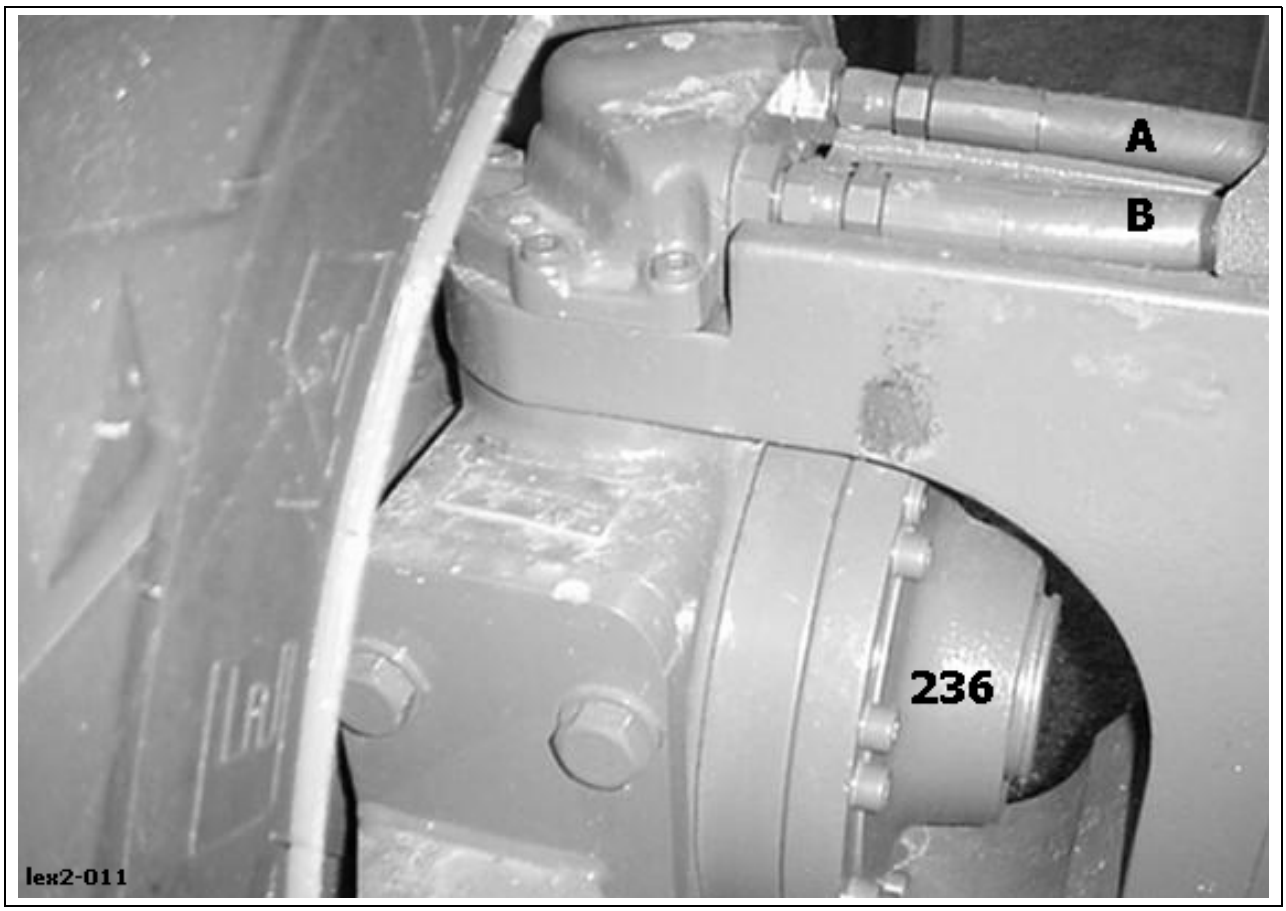

https://truckmanualshub.com/

Key to diagram

230	- Shuttle valve, forward travel
231	- Solenoid valve for the four wheel drive control valve
232	- Main control valve for four wheel drive
233	- Forwards flow control valve
234	- Reverse flow control valve
236	- Radial piston motor right hand side . . . . . 1250 cm^3
237	- Radial piston motor left hand side . . . . . 1250 cm^3
A	- Forwards high pressure
B	- Reverse high pressure
M	- Motor leak oil back to tank

https://truckmanualshub.com/

7.4 Measurement ports LEXION 480-440

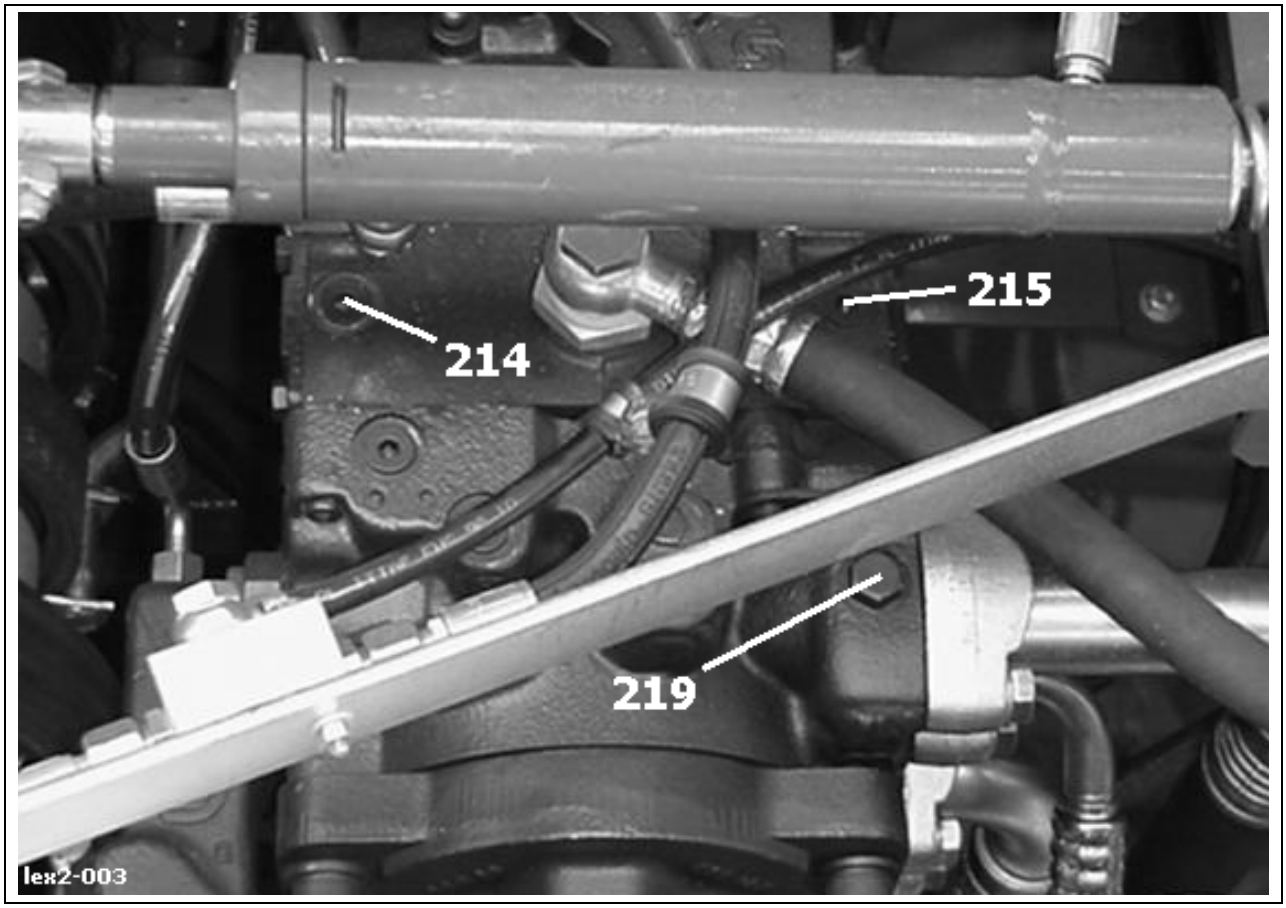

https://truckmanualshub.com/

Key to diagram

214	- Actuating pressure backward measuring port	M5
215	- Actuating pressure forward measuring port	M4
218	- High pressure forward measuring port	M1
219	- High pressure backward measuring port	M2
223	- Feed pressure measuring port	M3

Pressure settings

M1	- 9/16” – 18UNF 2B, O ring	$30\text{-}420^{+30}$ bar
M2	- 9/16” – 18UNF 2B, O ring	$30\text{-}420^{+30}$ bar
M3	- 9/16” – 18UNF 2B, O ring	30 ± 2.5 bar
M4	- 9/16” – 18UNF 2B, O ring	0-37 ± 2.5 bar
M5	- 9/16” – 18UNF 2B, O ring	0-37 ± 2.5 bar

Charge pressure – pressure relief valve

Once the lock nut has been slackened, then the charge pressure – pressure relief valve can be adjusted. One turn of the adjustment will change the setting by **approx. 3.5 bar**.

Multifunction valve

On the multifunction valve only the pressure separator can be measured and set. The value of the high-pressure should be in the region of **approx. 30 bar** above the pressure separator.
After slackening off the lock nut on the multifunction valve, the pressure can be adjusted. One turn of the adjusting screw will change the pressure by **approx. 93 bar**.

Purge valve

The quantity of oil purged is dependant on the restrictor hole in the valve and is set to **approx. 25 to 30 l/min** at normal speed and normal pressure. System leaks **about 2 to 3 l/min** and is checked with a volume flow meter.

Purge valve
Only to no. 466-0165
no. 454-0805

Systems with an adjustable purge valve, should be adjusted to give a charge pressure drop of **min 2.5 bar / max 4 bar**. For this adjustment, it is required that the gear lever is in neutral and the hydrostatic lever is pressed out fully. This ensures that the shuttle valve is switched.

Note: For all readings and adjustments, the engine should be in fast idle and the hydraulic oil is at working temperature of at least 60°C.

https://truckmanualshub.com/

Measurement ports LEXION 430-405

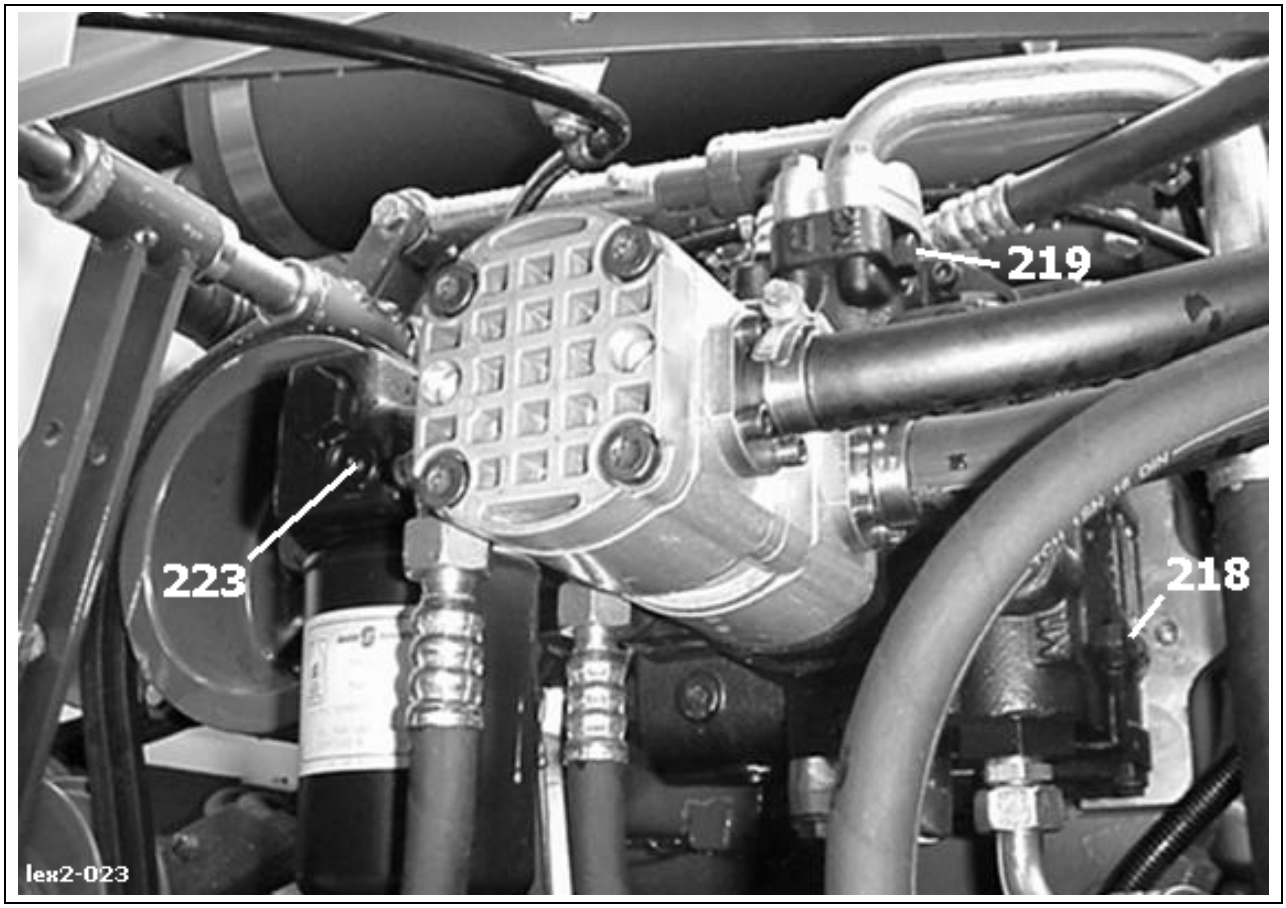

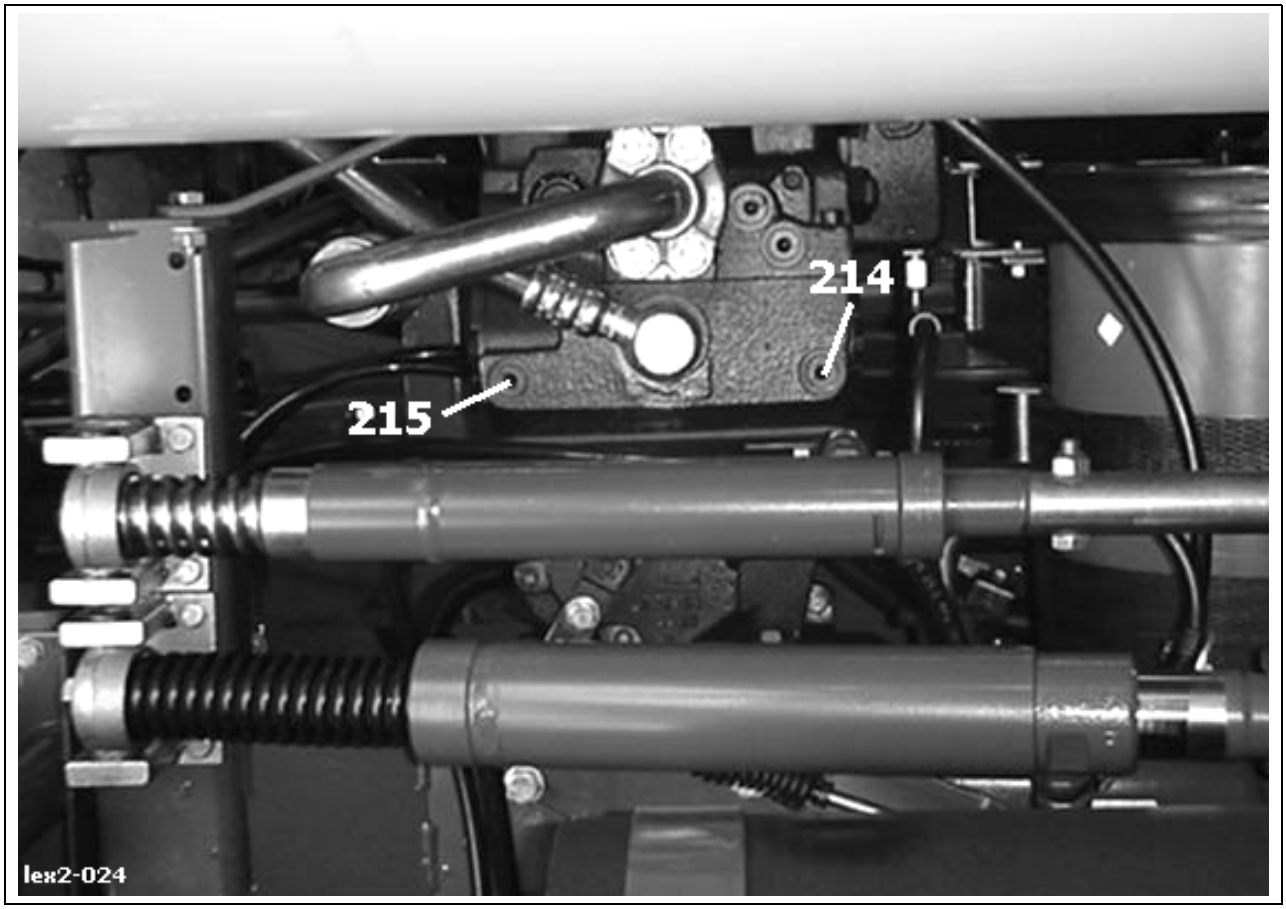

https://truckmanualshub.com/

Key to diagram

214	- Actuating pressure backward measuring port	M5
215	- Actuating pressure forward measuring port	M4
218	- High pressure forward measuring port	M1
219	- High pressure backward measuring port	M2
223	- Feed pressure measuring port	M3

Pressure settings

M1	- 9/16” – 18UNF 2B, O ring	$30\text{-}420^{+30}$ bar
M2	- 9/16” – 18UNF 2B, O ring	$30\text{-}420^{+30}$ bar
M3	- 9/16” – 18UNF 2B, O ring	30 ± 2.5 bar
M4	- 9/16” – 18UNF 2B, O ring	0-37 ± 2.5 bar
M5	- 9/16” – 18UNF 2B, O ring	0-37 ± 2.5 bar

Charge pressure – pressure relief valve

Once the lock nut has been slackened, then the charge pressure – pressure relief valve can be adjusted. One turn of the adjustment will change the setting by **approx. 3.5 bar**.

Multifunction valve

On the multifunction valve only the pressure separator can be measured. The value of the high pressure should be in the region of **approx. 30 bar** above the pressure separator.
After slackening off the lock nut on the multifunction valve, the pressure can be adjusted. One turn of the adjusting screw will change the pressure by **approx. 93 bar**.

Purge valve

The quantity of oil purged is dependant on the restrictor hole in the valve and is set to **approx 25 to 30 l/min** at normal speed and normal pressure. System leaks **about 2 to 3 l/min** and is checked with a volume flow meter.

Purge valve
Only to no. 453-0208
no. 452-0016

Systems with an adjustable purge valve should be adjusted to give a charge pressure drop of **min 2.5 bar / max 4 bar**. For this adjustment, it is required that the gear lever is in neutral and the hydrostatic lever is pressed out fully. This ensures that the shuttle valve is switched.

Note: For all readings and adjustments, the engine should be in fast idle and the hydraulic oil is at working temperature of at least 60°C.

https://truckmanualshub.com/

Ground drive hydraulic motor brake restrictor (HBM) solenoid valve Y124

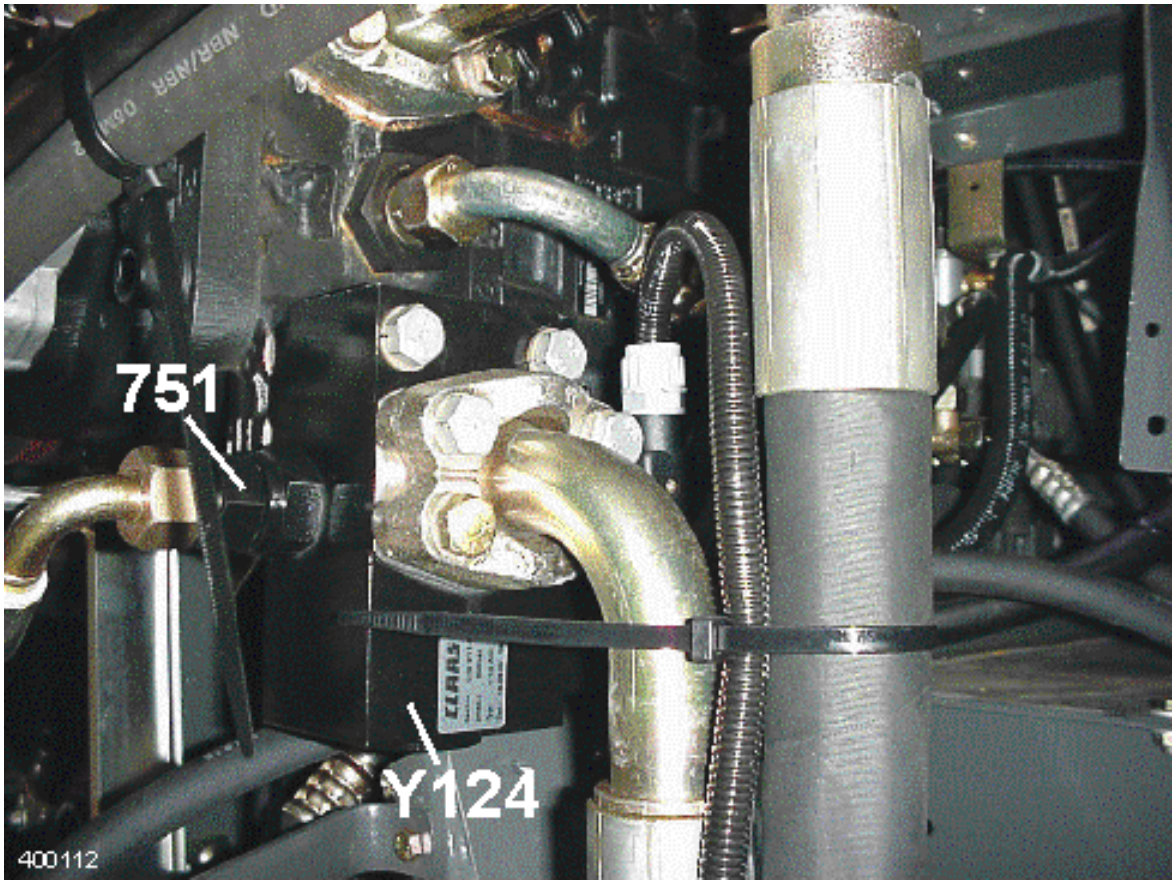

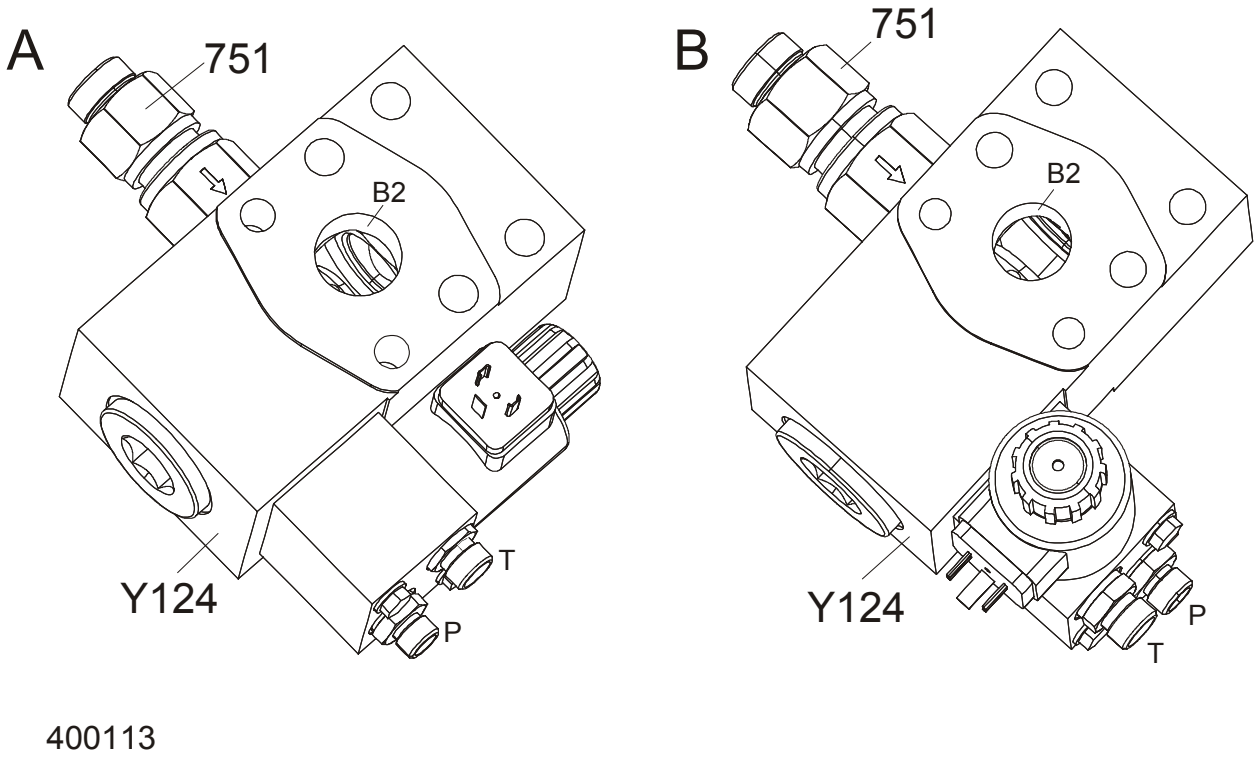

https://truckmanualshub.com/

Designations

751 - External feed valve (non-return valve)

Y124 - Ground drive hydraulic motor brake restrictor (HBM)

Note:

A - LEXION 430 – 410

B - LEXION 480 – 440

https://truckmanualshub.com/

7.5 System components

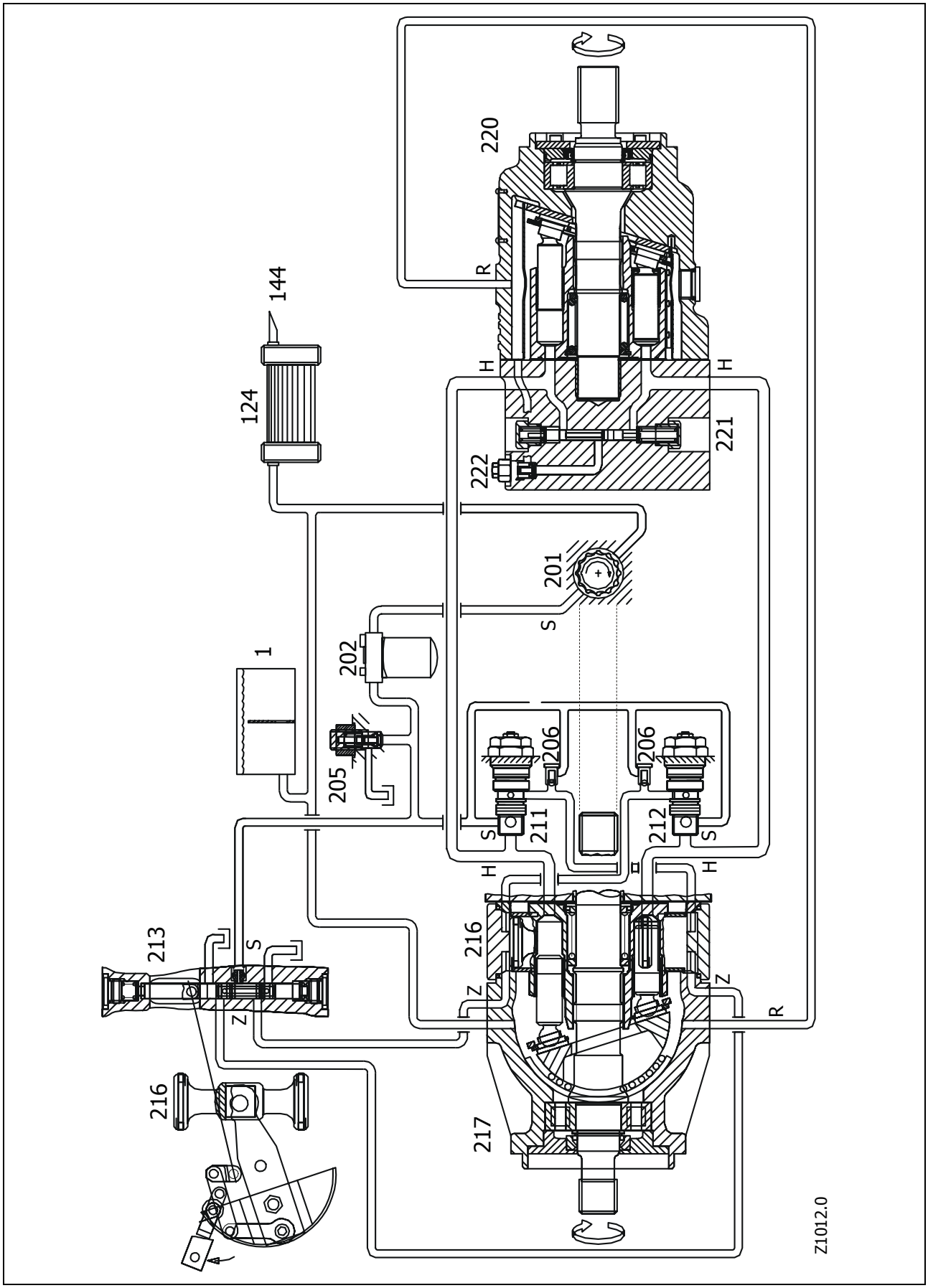

https://truckmanualshub.com/

Key to diagram

1	- Oil tank	
124	- Oil cooler	
144	- Connection for the return flow from the steering	
201	- Charge pump	26 cm³
202	- Filter cartridge	10 µm
205	- Charge pump pressure relief valve	30 ± 2.5 bar
206	- Control pressure, pressure relief valve	7 bar
211	- Multifunction valve – reverse	
212	- Multifunction valve – forwards	
213	- Servo control valve	
216	- Servo ram	
217	- Axial ram adjustable pump	100/130 cm³
220	- Fixed displacement motor	100 cm³
221	- Shuttle valve	
222	- Purge valve	
S	- Charge pressure circuit	
H	- High-pressure circuit	
R	- Purge return oil	
Z	- Control pressure channel	

Oil supply

Once the engine has been started, then both the steering pump and the charge pump (201) are running. A proportion of the oil quantity on the suction side of the charge pump (201) is fed over the return line of the steering (144) and to the oil cooler (124). The rest of the oil from the charge pump (201) flows out of the purge return through the housing of the adjustable pump (217) and then back to tank (1).

Charge pressure circuit

The charge pressure builds up due to the charge pump (201), pumping oil through the filter (202) and against the pressure relief valve (205). Depending on the spring adjustment in the valve (205), the oil will be pressurised and returned to tank.
The charge pressure stands at the servo control valve (213) and at the multifunction valves (211/212). When the pump (217) is not swashed, then the charge pressure flows over the valve in the multifunction valves (211/212) on both sides of the high-pressure circuit.

Servo adjustment

When the servo valve (213) is operated by the cable from the hydrostatic lever, then it moves out of the neutral position in one direction or the other. Depending on the direction of travel selected, will determine the direction of the servo ram (216), which will create pressure on one side but the opposite side will be open to tank.
The servo ram (216) will then adjust the swash plate in the pump (217), but only the amount selected on the hydrostatic lever, and a mechanical response to the angle is delivered to the servo control valve (213). The mechanical response balances the control spool in the control valve (213) and so the pressure remains on the edge, thus ensuring that the swash angle remains.

https://truckmanualshub.com/

System components

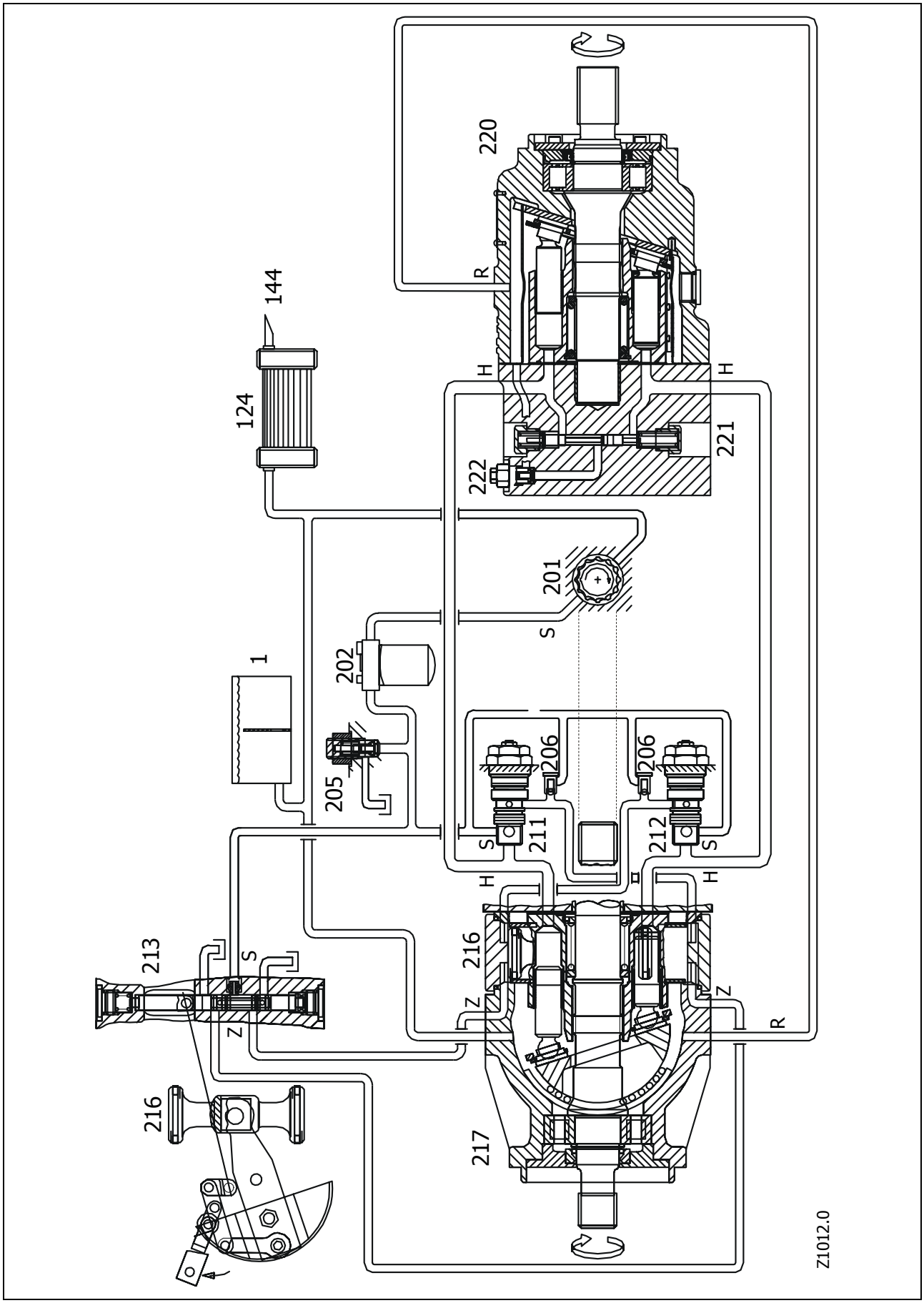

https://truckmanualshub.com/

High-pressure circuit

As soon as the pump (217) is swashed, there is an axial movement of the pump components. Due to the axial movement the oil in the cylinder area of the rotors and act like a motor (220), the energy over the support of the swash plate and in one turning moment.
The relative suction side of the pump (217) is pressurised via the charge pressure from the relative valve in the multifunction valve (211/212). This ensures that the pump (217) oil supply is maintained, irrespective of the internal leaks.

On the suction side of the pump (217) as with the return side of the motor (220), there is always charge pressure, should this become the high-pressure and not the low-pressure side.

Pressure cut-off

Should the high press exceed the allowed amount, then the relative pressure cut-off valve in the multifunction valve (211/212) opens, and allows the oil to flow to the opposite side, which has the control pressure for the servo ram (216). This return control pressure is limited over the charge pressure valve (205) and then over the control pressure, pressure relief valve (206). This will lead to a greater control pressure than can be allowed.
As a result, the pump (217) is swashed back slightly, the pressure cut-off is closed, which balances the swash plate to maximum pressure.

Because of the fact that the oil, during the oil cut-off, is released over a valve, the oil will get rather warm.

High-pressure control

The spikes in the system, that cannot be released in the cut-off valve are released in the high pressure valve in the multifunction valve (211/212) and into the charge pressure line.
The high-pressure control works independently to the setting of the cut-off valve and cannot be tested.

Purge control

In the relative high-pressure side, the shuttle valve (221) in the motor (220) is switched, so that the relative low-pressure side has a connection to the motor housing via the purge valve (222). Because of the fact that the pressure setting of the purge valve (222) is lower than that of the charge pressure control (205), a constant oil flow is present through the purge valve (222) and the charge pump (201).

https://truckmanualshub.com/

7.6 Pump
Series 90

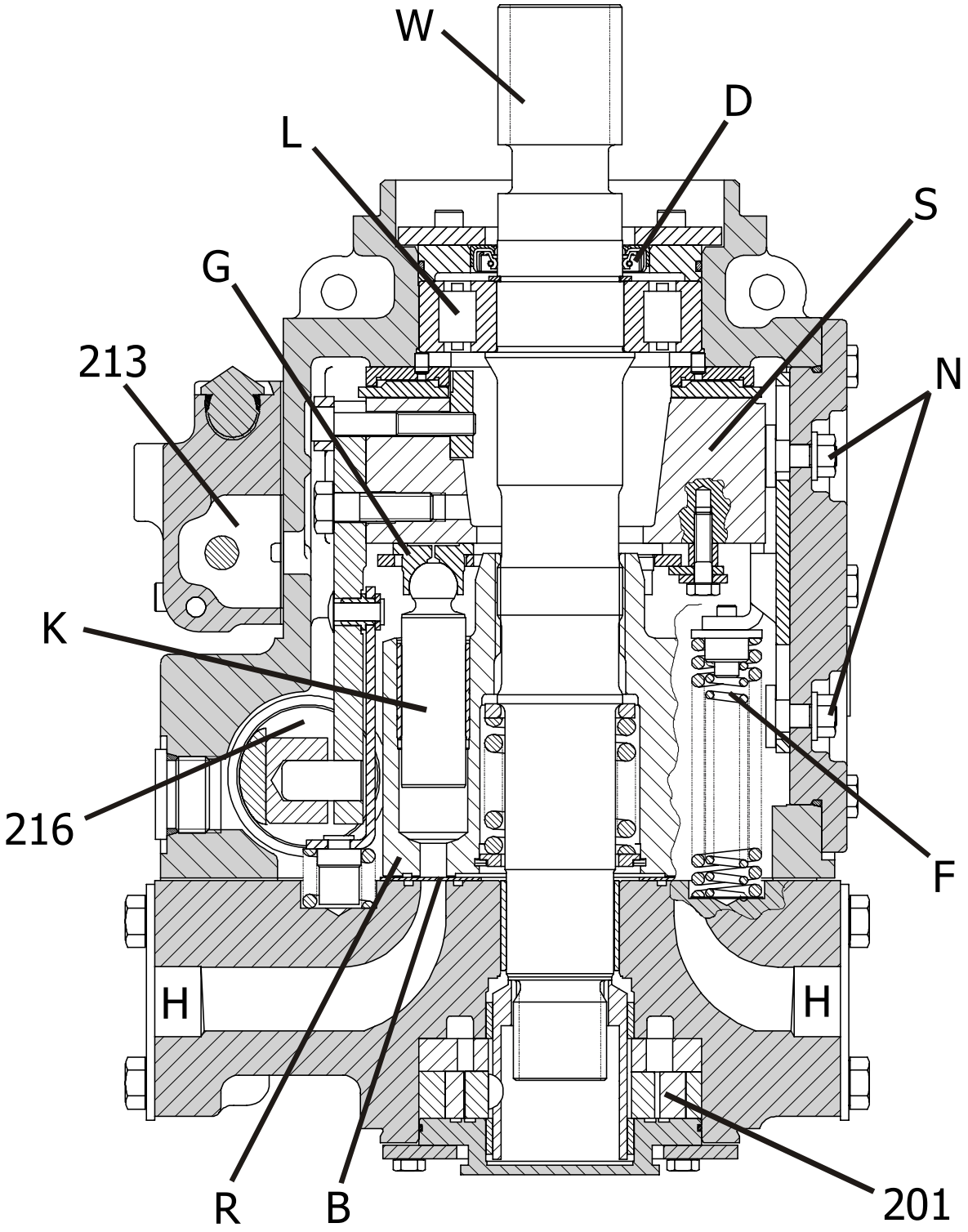

Z1010.0

https://truckmanualshub.com/

Key to diagram

201	- Charge pump	26 cm³
213	- Servo control valve	
216	- Servo ram	
B	- Control floor	
D	- Shaft seal	
F	- Return spring	
G	- Slipper	
H	- High pressure	
K	- Plunger	
L	- Bearing	
N	- Mechanical neutral adjustment	
R	- Cylinder rotor	
S	- Swash plate	
W	- Drive shaft	

Function
(see also page 7-2)

As soon as the engine is started, then the cylinder rotor (R) with those nine radials on the drive shaft (W), the plunger (K) and the charge pump (201) are urged on. The plunger (K) due to the fact that on both sides of the high pressure (H) stands charge pressure, the slippers (G) are pressed onto the swash plate (S).

By operating the servo control valve (213) the servo cylinder (216) is moved which moves the swash plate (S) so that the desired direction and speed is selected. Because of the swash movement, the plungers (K) experience an axial loading, which causes the oil to flow in the cylinder area, the pressure then increases to overcome the motors resistance.
As soon as the whole quantity of oil in the cylinder area is displaced, the rotating rotor (R) and plunger (K) are pressed back against the slope of the swash plate (S) on the low-pressure side as a consequence of the charge pressure.
The cylinders in the rotor (R) are on the diminishing side filled up one after the other (low pressure) and then turns this oil quantity on the steep side (high pressure) against the motor.

Depending on the direction, the swash plate (S) can be swashed in one direction or the other, which means that either side can be high pressure and low pressure. The speed is dependent on the oil quantity and therefore on the amount the swash plate has been swashed. The hydrostatic lever adjusts the swash angle via the mechanical response on the swash plate (S) on the servo control valve (213).

The low-pressure side and the high-pressure side are separated by the control floor (B). To ensure a good seal, the cylinder rotor (R) is pressed against the control floor (B) by a spring.

The exact adjustment of the swash plate in the neutral position is done by the pressure springs (F), where the adjustment itself is done by a mechanical neutral eccentric bolt (N).

https://truckmanualshub.com/

Pump assembly
Servo control valve

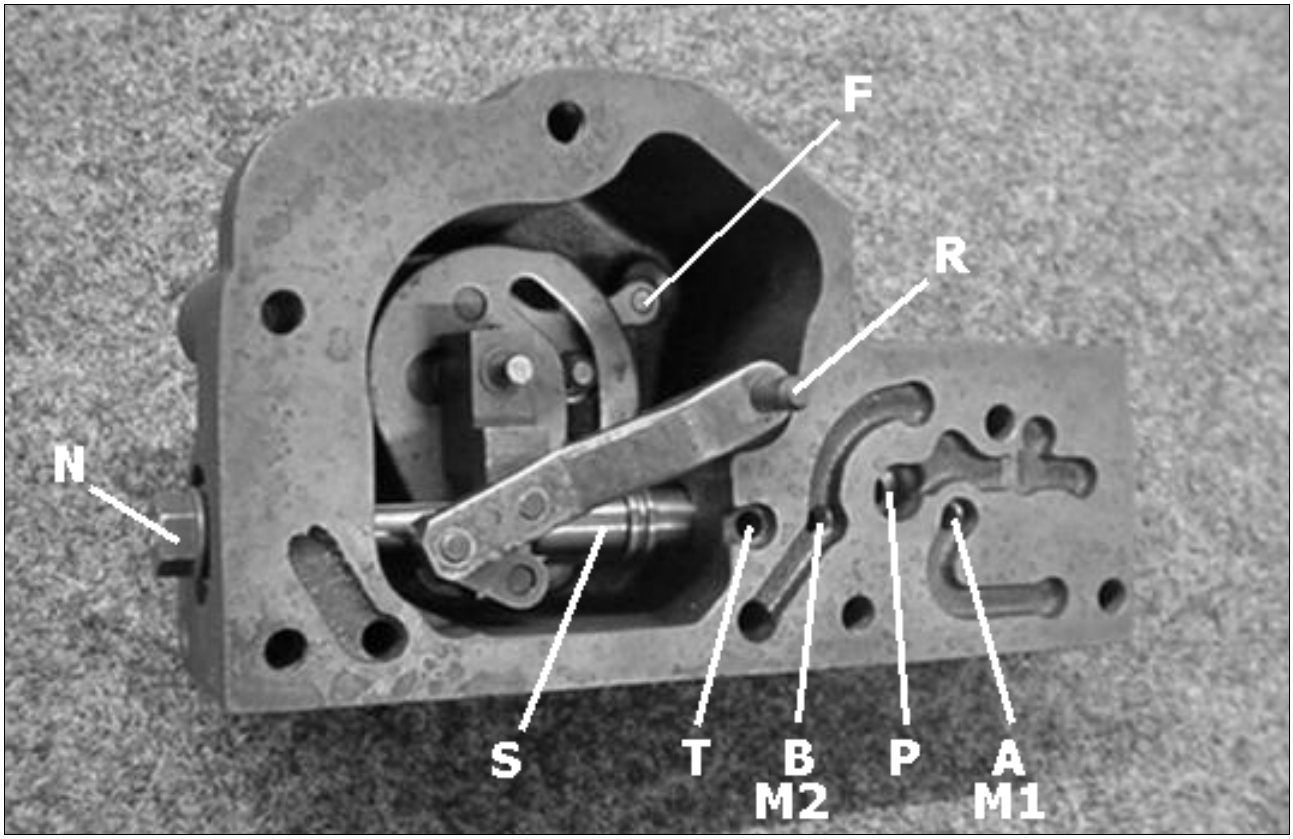

Multifunction valve

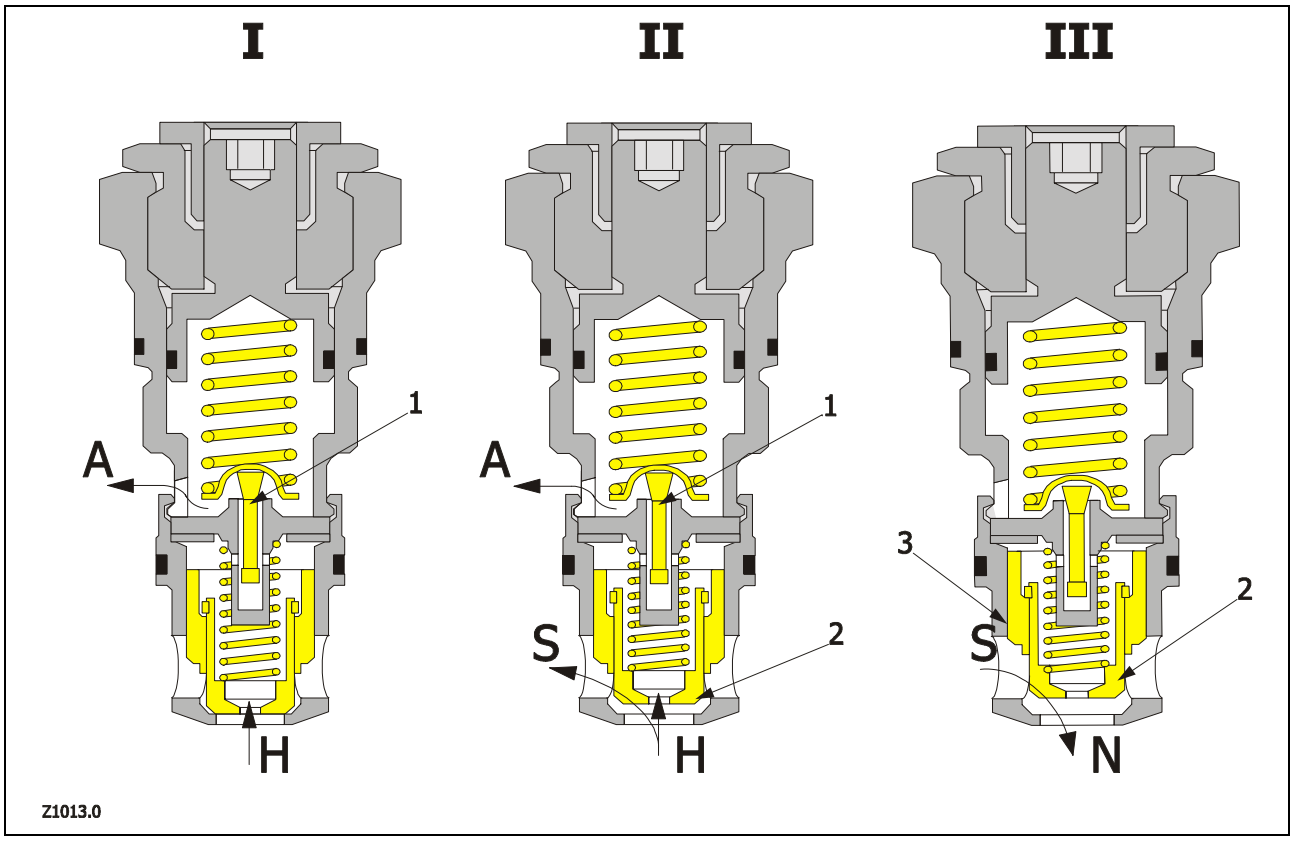

https://truckmanualshub.com/

Servo control valve

The cable from the hydrostatic lever (F) adjusts the control spool (S) in the servo control valve, and moves it out of the neutral setting in one direction or the other. The selected travel direction, will create pressure (P) on one side (A/B) and on the other (B/A) is connected to the return line back to tank (T).

The servo ram swashes the pump only by the amount selected by the hydrostatic lever (F) and the mechanical response (R) ensures the swash angle of the control spool (S) in servo control valve which acts on the edge thus holding the angle.

Adjusting the hydraulic neutral adjustment:

So that the neutral adjustment of the hydrostatic lever (F) can be set with the neutral adjustment on the motor, the control spool (S) on the servo control valve is equipped with an adjusting screw (N). Turn the screw (N) in both directions, until on ports (M1/M2) a pressure reading is obtained and mark to two positions. Then position the screw (N) in between the two marks.

Multifunction valve

I - Pressure cut-off:

Through the restrictor holes in the valve plate, stands the high pressure (H) against the valve pin (1). Should the pressure exceed permitted limits, then the pressure presses the pin against the spring, which then opens the valve (1) and releases the oil (A).

II - High-pressure control:

When a spike in system (H) pressure, a momentary build up of pressure is standing at the restrictor hole in the valve plate and over in the spring portion. This causes the inner valve (2) to open against the spring and allow the peak of pressure to be released into the charge pressure circuit (S). This happens before the pressure cut-off (A) valve (1) has opened.

III - Charging:

As soon as the high pressure (H) against the valve plate is lost, the charge pressure (S) presses the outer valve (3) upwards. This causes the inner valve (2) to open against the spring and allow the charge pressure (S) to flow into the low-pressure side (N).

https://truckmanualshub.com/

7.7 Motor
Series 90

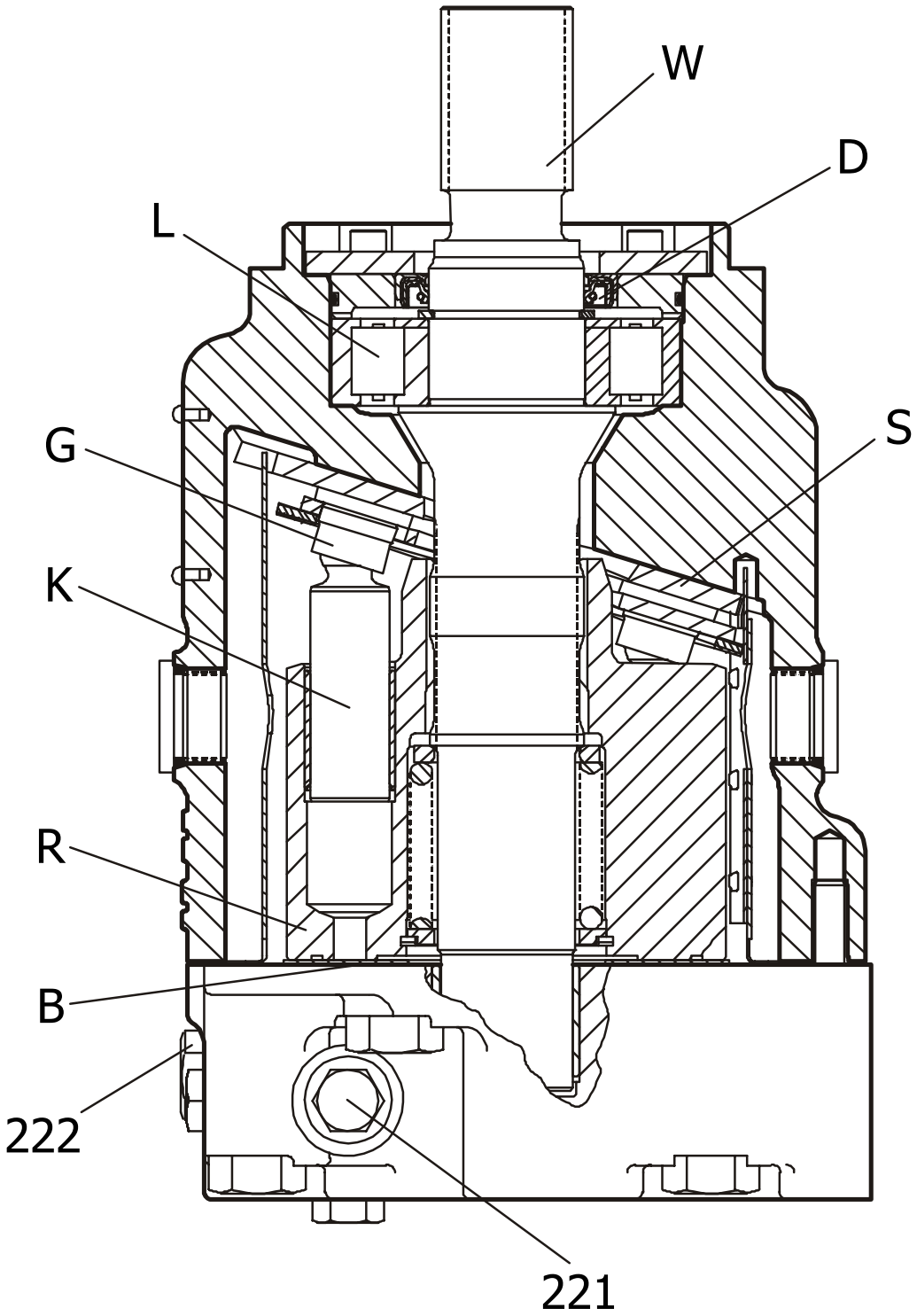

Z1011.0

https://truckmanualshub.com/

Key to diagram

221 - Shuttle valve
222 - Purge valve

B - Control floor
D - Shaft seal
G - Slipper
K - Plunger
L - Bearing
R - Cylinder rotor
S - Swash plate
W - Drive shaft

Function
(see also page 7-2)

As soon as the engine is started, then the charge pump is energised. The plungers (K) in the cylinder rotor (R) of the motor, due to the fact that on both sides of the high-pressure lines is charge pressure, the slippers (G) are pressed against the swash plate (S).

As soon as the pump is swashed, then the pressure is built up against the nine plungers (K) in the cylinder rotor (R) which is connected to the drive shaft (W). The plungers (K) press against the swash plate (S) and the energy is then used to overcome the resistance on the drive shaft (W).
The rotation is dependent on the direction of the oil flow which is created by the swash angle of the pump. The high-pressure side and the low-pressure side can be alternated. The speed is governed by the amount of oil and that is dependent on how large an angle has been selected within the pump.

The high pressure and the low pressure are separated by the control floor (B). To seal, the cylinder rotor (R) presses against the control floor (B) using springs.

Dependent on the high-pressure side within the high-pressure circuit, the shuttle valve (221) in the motor is switched, so that the respective low-pressure is purged (222) over the connection to the motor housing. Because the pressure setting of the purge valve (222) is smaller than that of the charge pressure, oil constantly flows via a restrictor in the purge valve (222).

https://truckmanualshub.com/

7.8 4- Trac drive
Valve unit MUD HOG

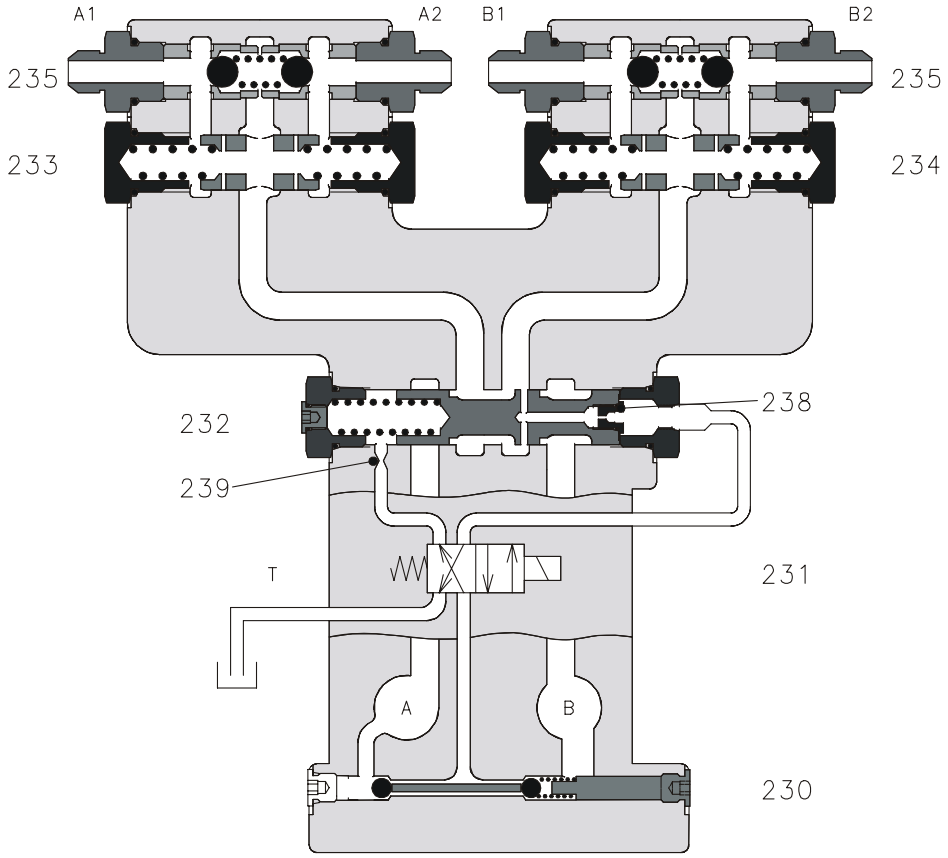

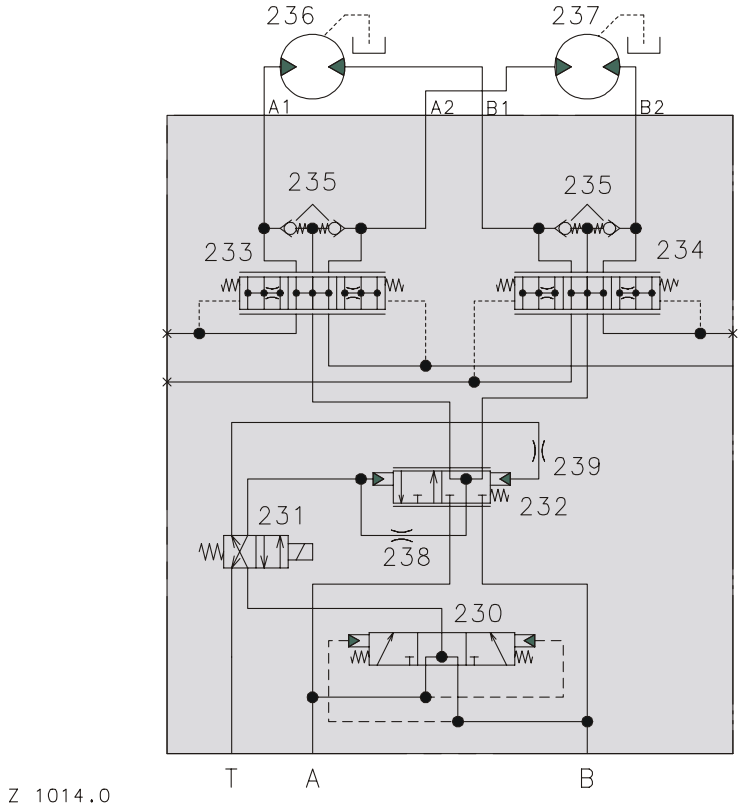

https://truckmanualshub.com/

Key to diagram

230	- Shuttle valve pilot oil
231	- Solenoid valve 4 wheel drive engagement
232	- Main 4 wheel drive engagement valve
233	- Forwards flow control valve
234	- Reverse flow control valve
235	- Lock valve
238	- Restrictor for engagement
239	- Restrictor for disengagement
A	- Pump for forwards
A1	- Right hand wheel motor for forwards
A2	- Left hand wheel motor for forwards
B	- Adjustable pump for reverse
B1	- Right hand wheel motor for reverse
B2	- Left hand wheel motor for reverse
S	- Charge pressure
T	- Return to tank

Function
(see also page 7-4)

Depending on the high-pressure side, the high-pressure line (A/B) will switch the shuttle valve (230), so that over the respective low-pressure side is always charge pressure on the solenoid valve (231). Depending on the switching of the solenoid valve (231) will determine if the control spool (232) travels OUT or on the opposite side IN to supervise the charge pressure.
The control spool (232) supplies the oil (A/B) to the relative flow control valve (233/234) for the wheel motor on the connection A1-A2 or B1-B2. The return oil flow from the wheel motors B1-B2 or A1-A2 flows back via the lock valve (235) on the other side, and then back to the low-pressure side (B/A).

The flow control valves (233/234) control the oil flow to the wheel motors, in order to equal the amount of oil should one or both of the wheel motors hit light going. The wheel motor with the larger load creates a pressure build up against the flow control spool, and act on the control edge of the opposite side which closes and consequently which then balances out both sides.

https://truckmanualshub.com/

4-Trac system
Radial piston motor POCLAIN

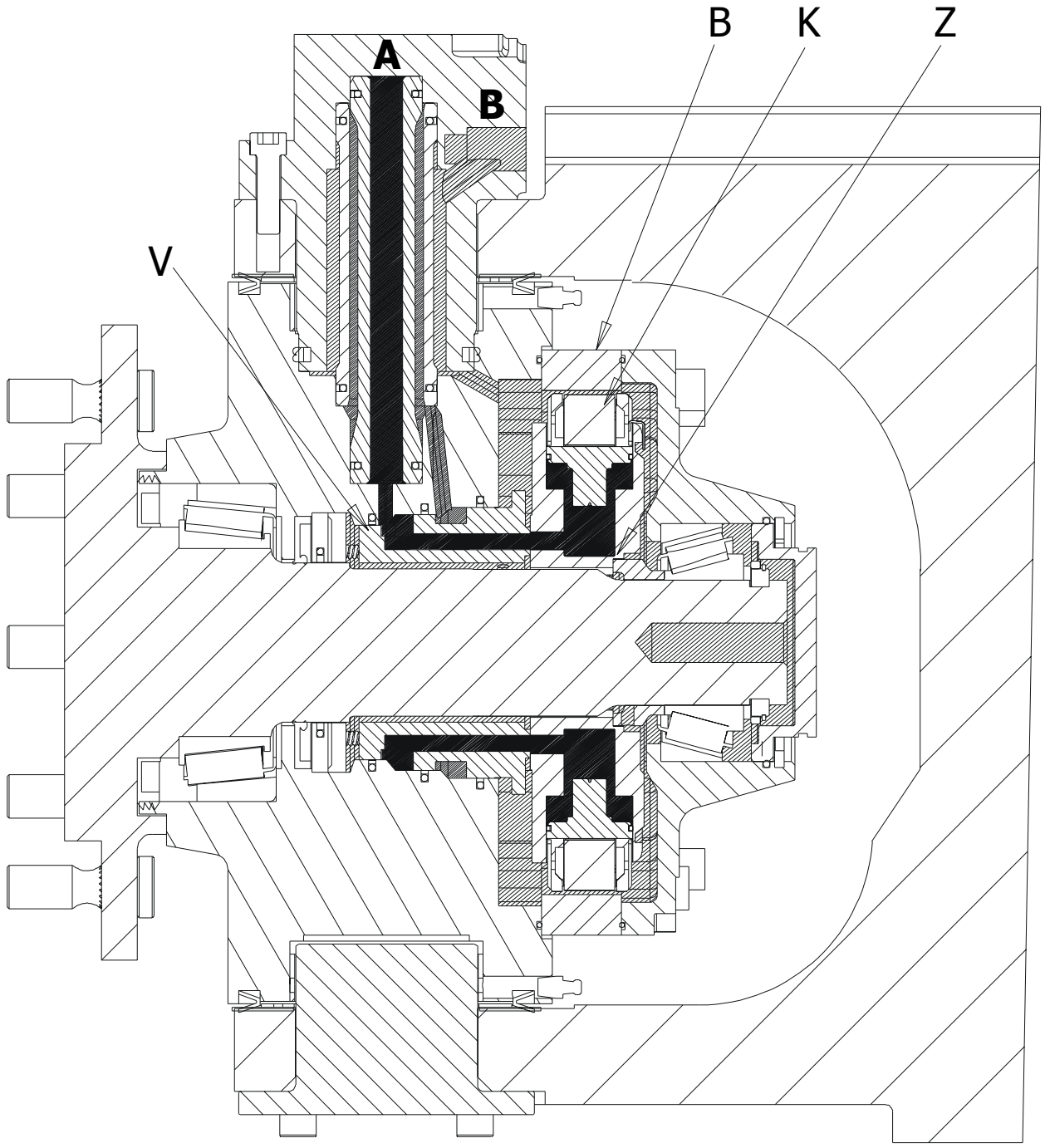

Z1015.0

https://truckmanualshub.com/

Key to diagram

B - Cam track
K - Roller rams
V - Distribution block
Z - Cylinder rotor

A - Connection to the high-pressure circuit
B - Connection to the high-pressure circuit

Function

The wheel motors are like the radial motors, and should the machine have to be towed, then they do not need to be disconnected mechanically. The force from the wheels acts on the motor and turns the cam track (B), the ten roller rams (K) in the cylinder rotor (Z) so that the wheel hub turns freely.

When the 4 wheel drive is energised, then the motor travels in the relative direction dependent on which port A or B has been supplied with oil. The distribution block (V) urges the roller rams (K) that are in the declining position of the cam track (B).
The roller rams (K) thrust themselves against the cam track (B) and pushes the cylinder rotor (Z) in a rotary motion. This motion is transmitted via the splines to the wheel hub.
When the roller ram (K) travels over the lip in the cam track (B) the oil flows over the cylinder rotor (Z) to the distribution block (V) to the low-pressure side of the high-pressure circuit.

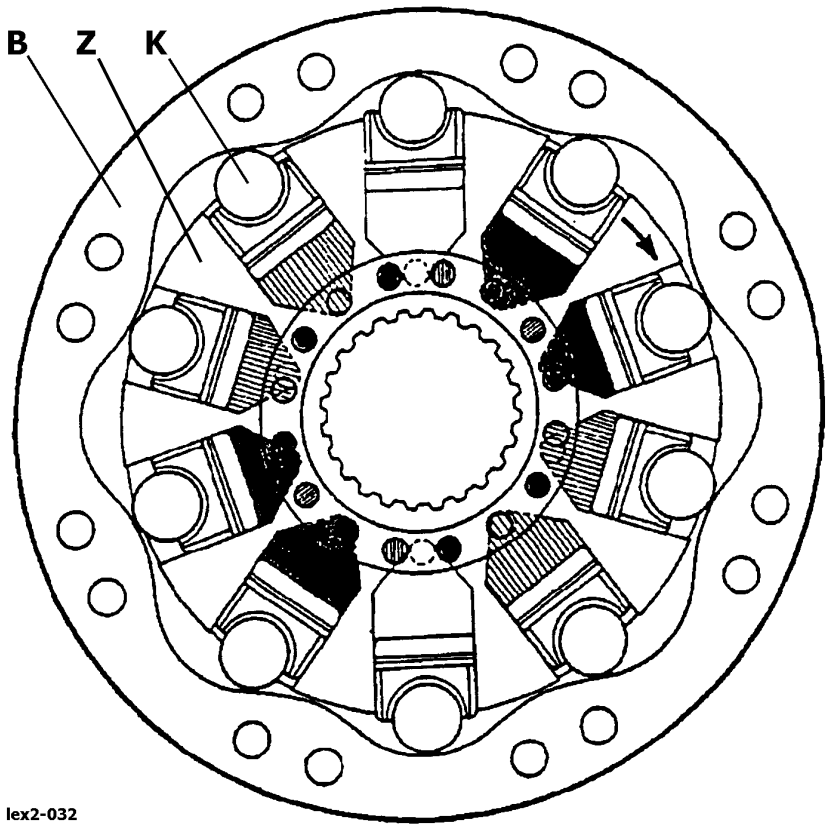

https://truckmanualshub.com/

7.9 Ground drive hydraulic motor brake restrictor (HBM) solenoid valve Y124

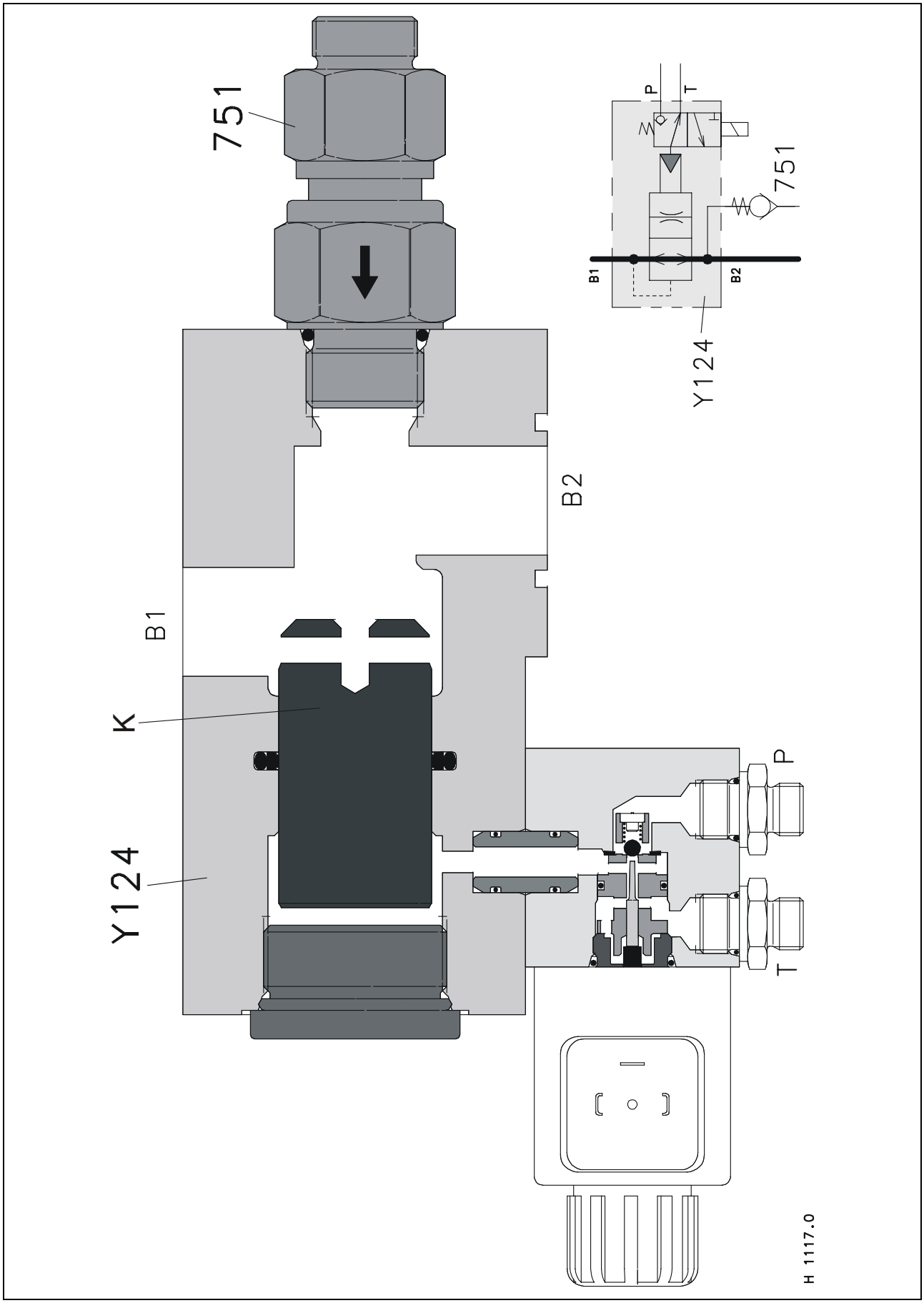

https://truckmanualshub.com/

Designations

751 - External feed valve (non-return valve)

Y124 - Ground drive hydraulic motor brake restrictor (HBM)

Description of function

Y124 Ground drive hydraulic motor brake restrictor (HBM)

The ground drive hydraulic motor brake restrictor (HBM) solenoid valve (Y124) is fitted to the ground drive variable displacement pump (210).
It avoids pump damage due to excessive speed of the diesel engine.

When travelling downhill, the ground drive variable displacement motor (211) provides an increased volume flow to the ground drive variable displacement pump (210). This makes the speeds of the ground drive variable displacement pump (210) and of the diesel engine rise.

At a diesel engine speed of > 2300 rpm, the ground drive hydraulic motor brake restrictor (HBM) solenoid valve (Y124) is energised, actuates and the working hydraulics pressure moves piston K to the right (see drawing H 1117). The restricting effect produced generates a ram pressure of approx. 180 bar upstream of the restrictor.
With this ram pressure and a pressure of approx. 450 bar on the opposite pump side, the pressure difference at the ground drive variable displacement pump (210) is reduced. This reduces both the torque load of the diesel engine and its speed.

At a diesel engine speed of < 2200 rpm, the ground drive hydraulic motor brake restrictor (HBM) solenoid valve (Y124) is de-energised, the restricting effect due to the piston K disappears.

751 External feed valve (non-return valve)

When the ground drive hydraulic motor brake restrictor (HBM) solenoid valve (Y124) is active, a ram pressure of approx. 180 bar is generated upstream of the brake restrictor valve.
In this situation, the usual feed process inside the pump is not possible.
The external feed valve (non-return valve) (751) is now used for an external feed from the feed pressure circuit.

https://truckmanualshub.com/

7.10 Maintenance

Filling instructions

1. - Put the machine in third gear
2. - Switch on the four wheel drive
3. - Pull on the handbrake
4. - Connect a test gauge to both sides of the high-pressure lines (M1 and M2)
5. - Fill the tank with hydraulic oil
6. - Remove the relay for engine watch dog, or remove the wire loop
7. - Turn the engine over quickly with the starter motor.
8. - Check the oil level and correct
9. - Continue the procedure until one of the pressure sides reaches about 15 bar
10. - Reconnect the relay for the engine watch dog, or the wire loop
11. - Start the engine and run in idle
12. - Load the system for approx. 1 min. to 50-150 bar in the forwards direction
13. - Load the system for approx. 1 min. to 50-150 bar in the reverse direction
14. - Stop the engine
15. - Check the oil level and if necessary top up
16. - Put the machine into neutral
17. - Start the engine and run in idle
18. - Swash the hydrostatic pump for approx. 2 min. in the forwards direction
19. - Swash the hydrostatic pump for approx. 2 min. in the reverse direction
20. - Stop the engine
21. - Check the oil level and if necessary top up
22. - Stand the steering axle up on suitable blocks
23. - Engage 4 wheel drive
24. - Start the engine and run in idle
25. - Swash the hydrostatic pump for approx. 2 min. in the forwards direction
26. - Swash the hydrostatic pump for approx. 2 min. in the reverse direction
27. - Check that both turning wheels have a pressure of approx. 150 bar
28. - Stop the engine
29. - Check the oil level and if necessary top up
30. - Lower the steering axle

https://truckmanualshub.com/

Test instructions

1. - Connect a test gauge to both high-pressure sides
2. - Apply the parking brake
3. - Warm the system to a working temperature of **approx. 60°**
4. - Bring the hydrostatic lever to the neutral position
5. - Start the engine and run in normal speed
6. - Check that the charge pressure is at **30 ± 2.5 bar**
7. - Check that the charge pressure difference on either side does not exceed **max. 7 bar**
8. - Completely swash the pump in one direction
9. - Pressure drop on the low-pressure side: **max. 4 bar**
10. - Switch the engine to idle
11. - Select third gear
12. - Operate the system brakes
13. - Swash the hydrostatic pump for a max. of 5 sec slowly forwards
14. - Check the high pressure reading **420 to 450 bar**
15. - Check the low pressure reading **min. 14 bar**
16. - Swash the hydrostatic pump for a max. of 5 sec slowly backwards
17. - Check the high pressure reading **420 to 450 bar**
18. - Check the low pressure reading **min. 14 bar**
19. - Stop the engine
20. - Remove the test gauges

https://truckmanualshub.com/

7.11 Diagnostics

No neutral position on the gearbox

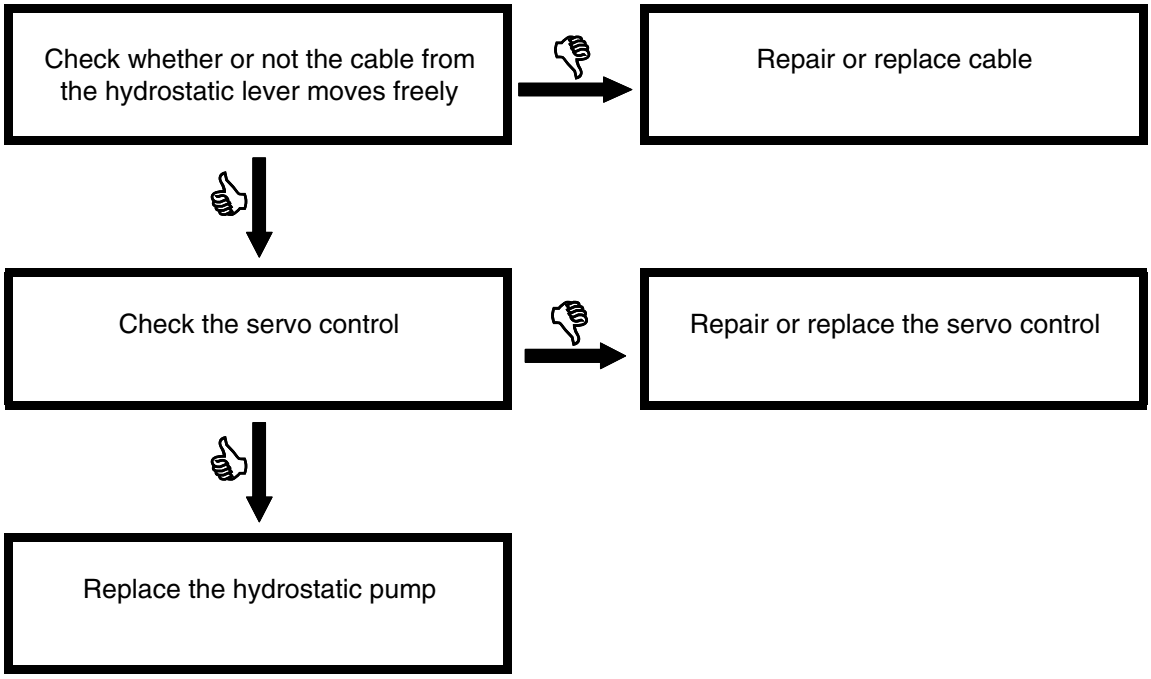

The gearbox only works in one direction

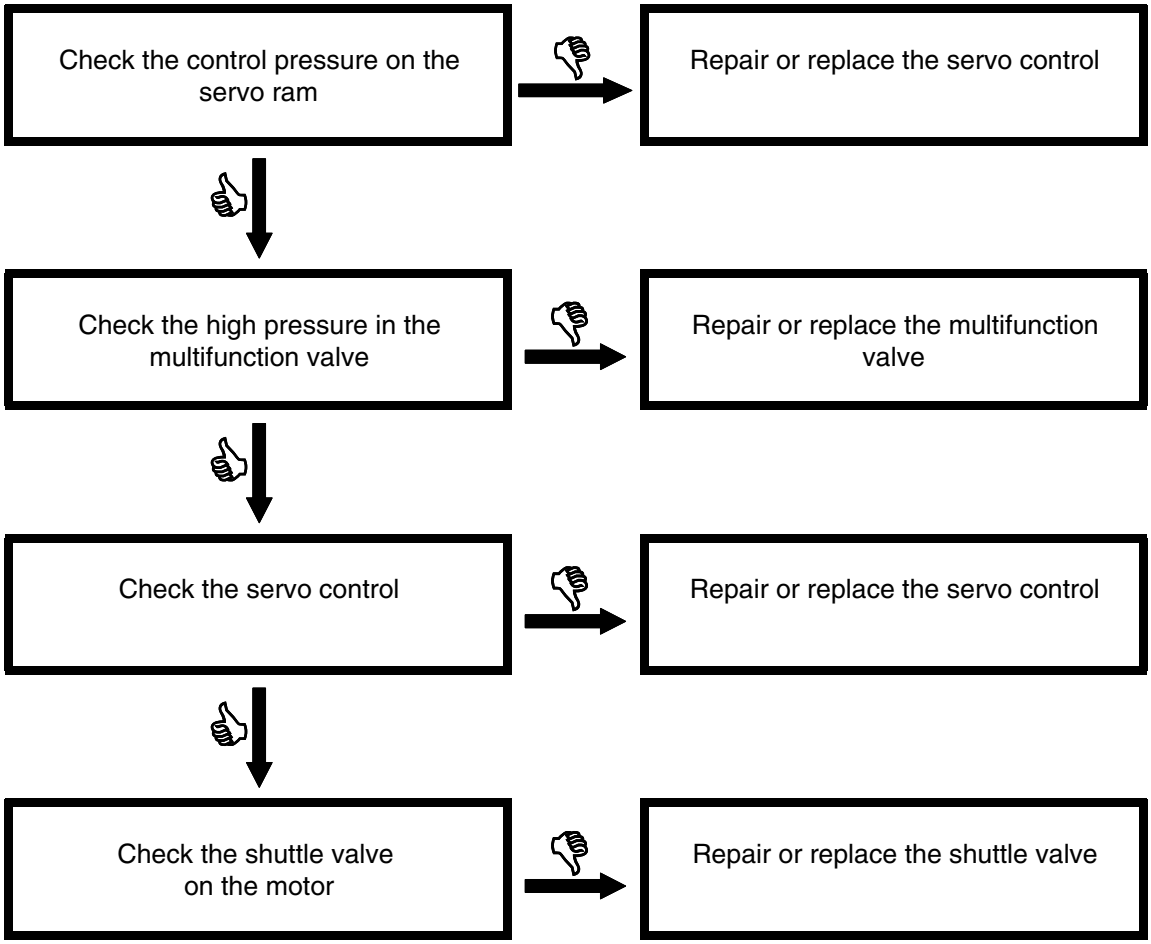

https://truckmanualshub.com/

Diagnostics

Gearbox overheating

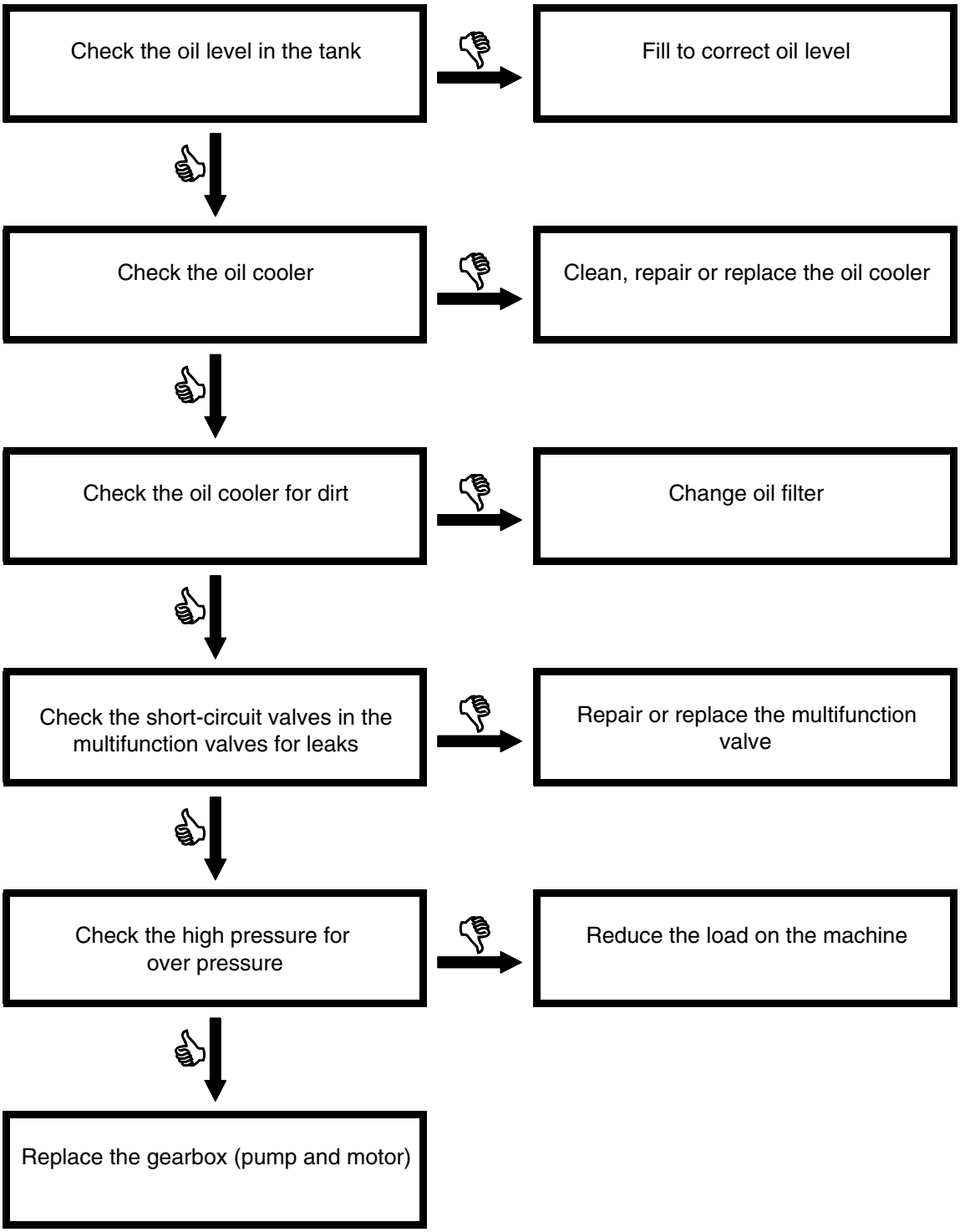

https://truckmanualshub.com/

Diagnostics

Gearbox fails in both directions I

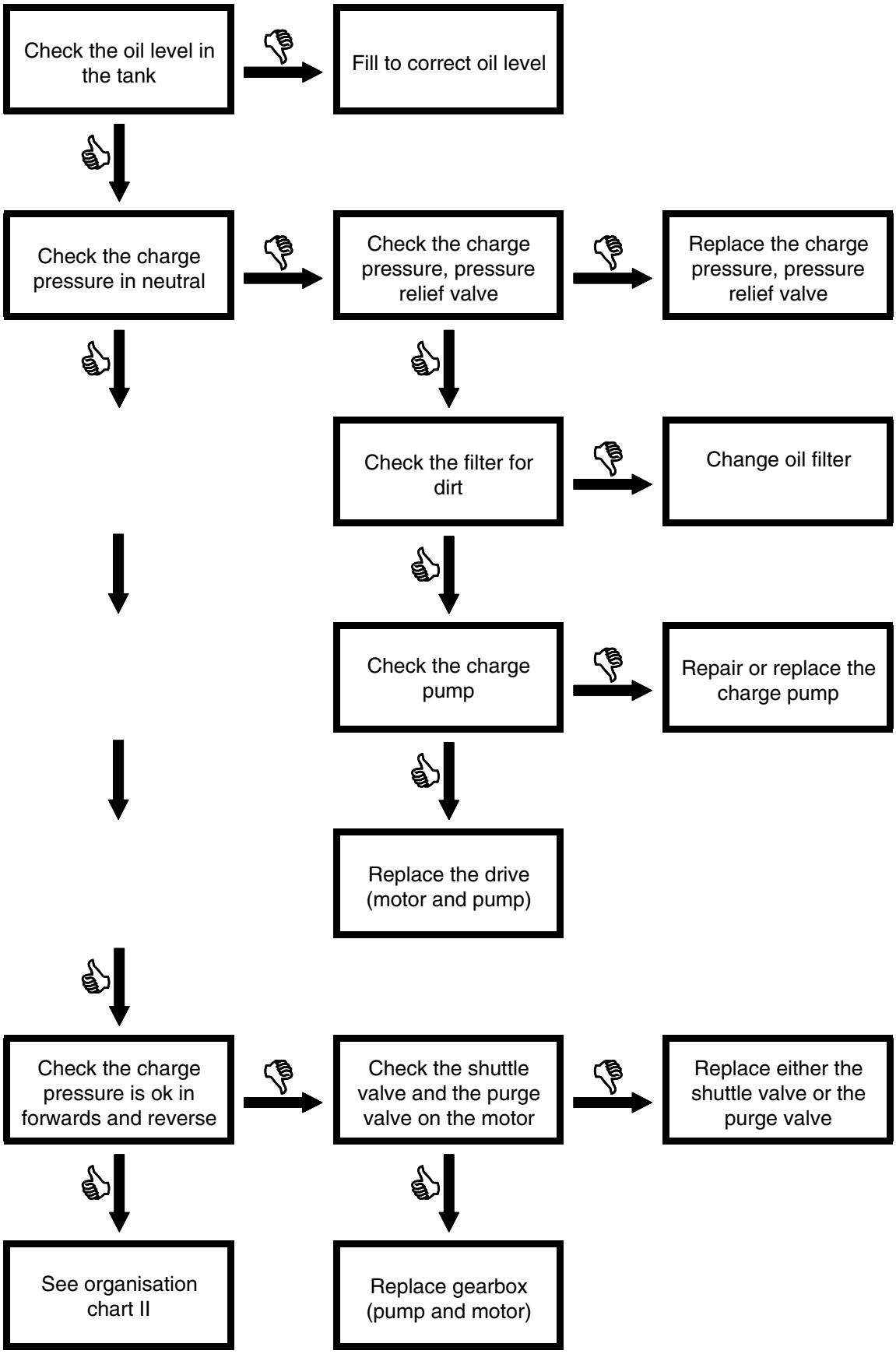

https://truckmanualshub.com/

Diagnostics

Gearbox fails in both directions II (with correct charge pressure)

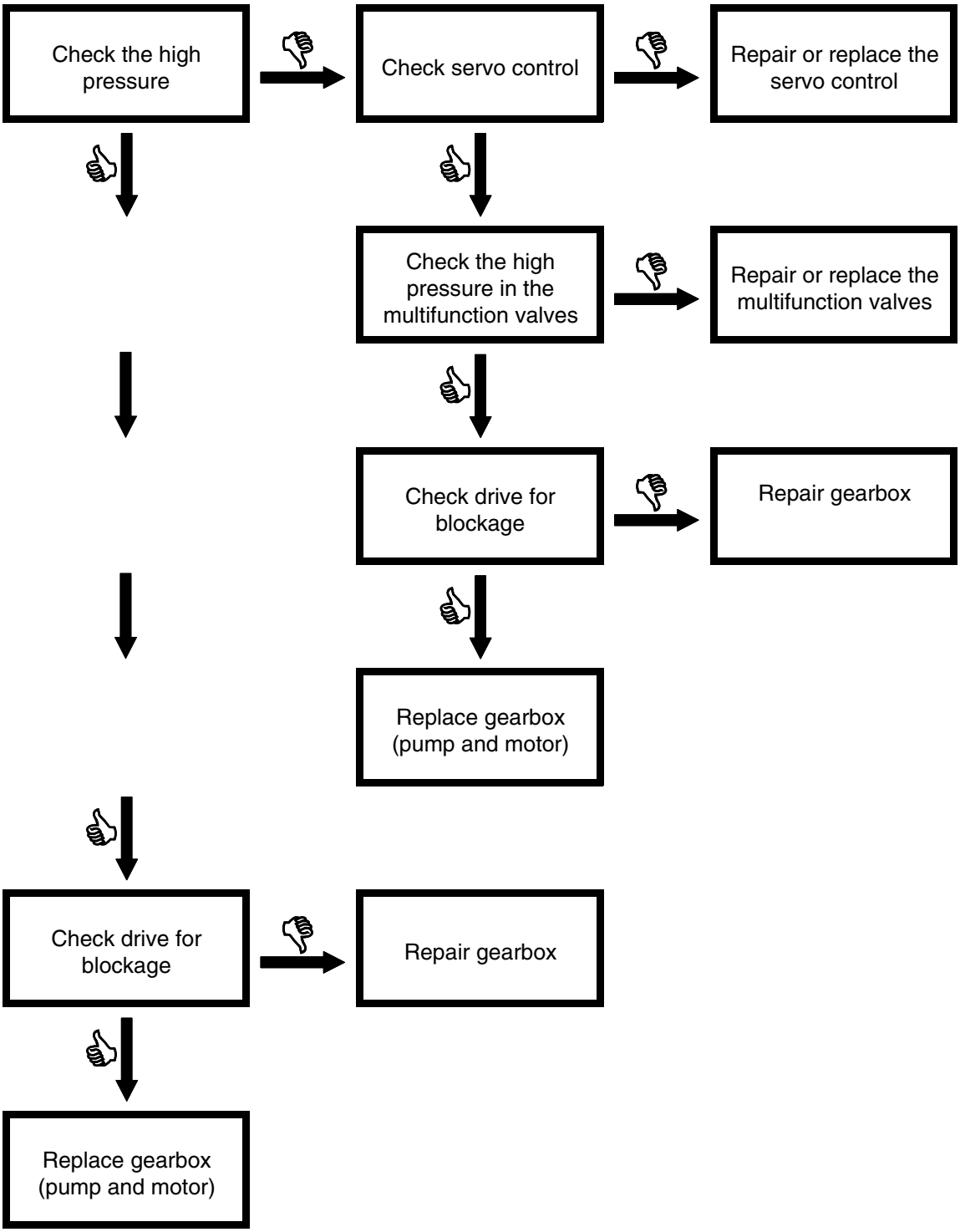

https://truckmanualshub.com/

Diagnostics

Gearbox is lazy

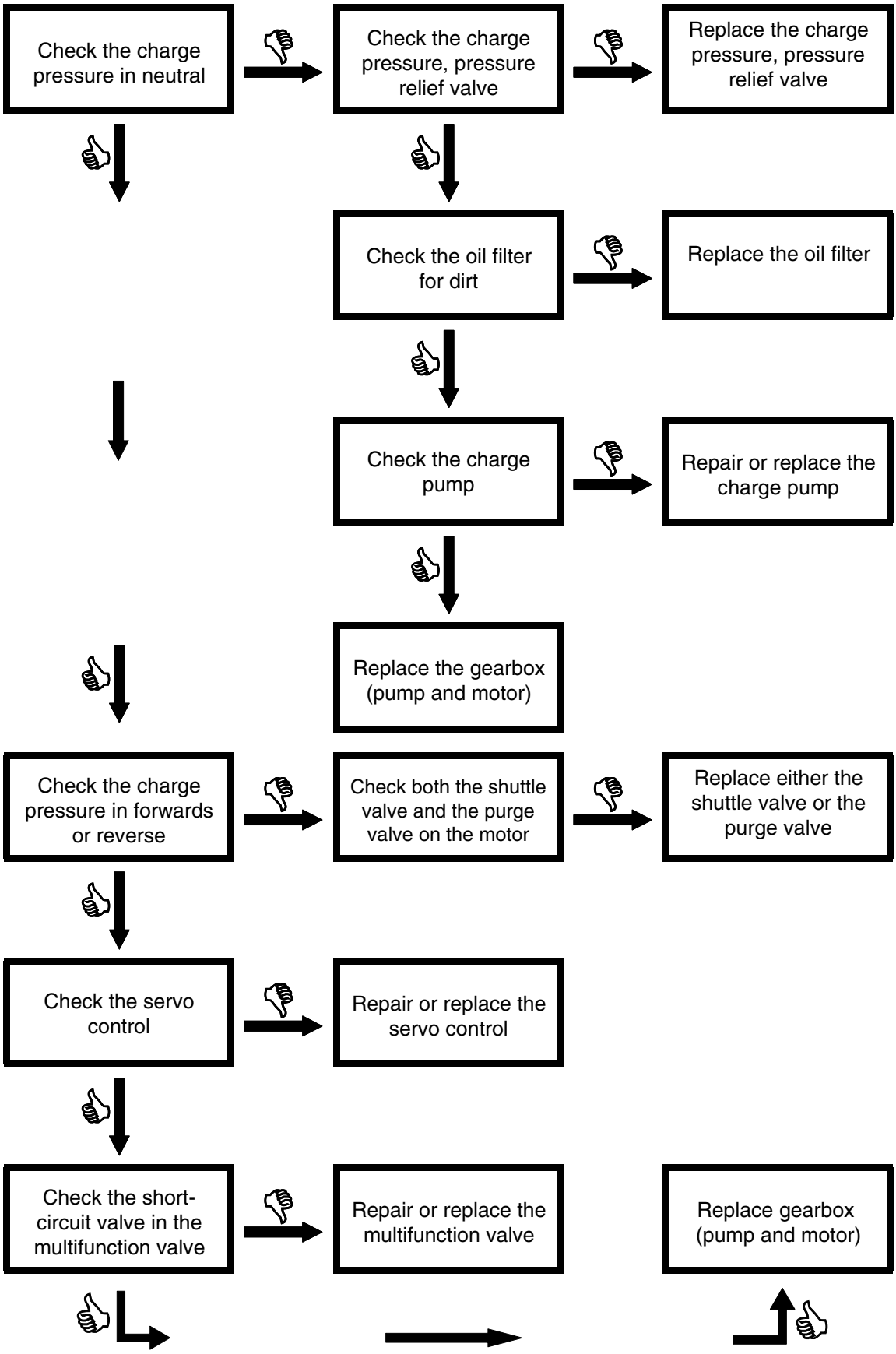

https://truckmanualshub.com/

Contents

Hydrostatic drive LINDE

(only 452-0572 to 452-0866)

8.1 Circuit diagram for the LINDE hydrostatic drive 8-2
Oil supply 8-3
Charge pressure circuit 8-3
Servo adjustment 8-5
High-pressure circuit 8-5
High-pressure control 8-5
Purge control 8-5

8.2 Layout of the components 8-6

8.3 Measurement ports LEXION 410-405 8-8
Pressure settings 8-9
Charge pressure relief valve 8-9
Cold start valve 8-9
High-pressure relief valve 8-9
Purge valve 8-9
Housing pressure 8-9

8.4 Pump 8-10
Function 8-11
Pump servo control valve 8-12
Pressure relief valve and filling valve 8-12

8.5 Motor 8-14
Function 8-15

8.6 Maintenance 8-16
Filling instructions 8-16
Test instructions 8-16

https://truckmanualshub.com/

8.1 Circuit diagram for the LINDE hydrostatic drive

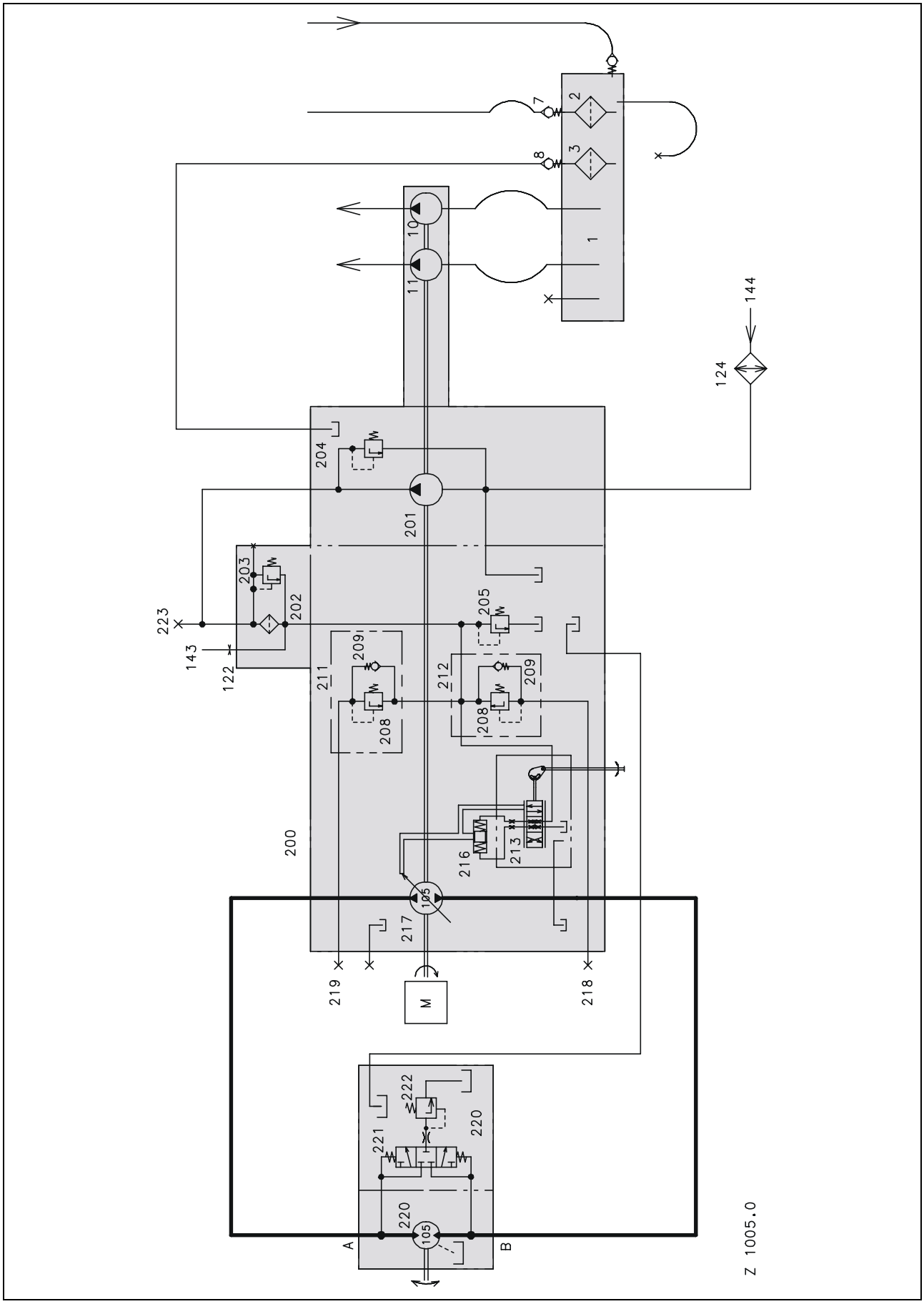

https://truckmanualshub.com/

Key to diagram

1	- Oil tank	
2	- Sieve filter for the working hydraulics	
3	- Sieve filter for the hydrostatic drive and steering	
7	- Return oil one-way valve for the working hydraulics	0.1 bar
8	- Return oil one-way valve for the hydrostatic drive	0.1 bar
10	- Gear pump for the steering	11 cm³
11	- Gear pump for the working hydraulics	19 or 14 cm³
122	- Restrictor	Ø 2 mm
124	- Oil cooler	
143	- Connection for the low-pressure hydraulics	
144	- Connection for the return flow from the steering	
200	- Pump housing	HPV 105
201	- Charge pump	22 cm³
202	- Filter cartridge	10 µm
203	- By pass valve	2 bar
204	- Cold start valve	28 ± 1 bar
205	- Charge pump pressure relief valve	$23_{-2.5}$ bar
208	- High pressure, pressure relief valve	420 bar
209	- Check valve	0.7 bar
211	- Multifunction valve – reverse	
212	- Multifunction valve – forwards	
213	- Servo control valve	
216	- Servo ram	
217	- Axial ram adjustable pump	105 cm^3
218	- Test port for the forwards high pressure	
219	- Test port for the reverse high pressure	
220	- Fixed displacement motor	HMF 105
221	- Shuttle valve	
222	- Purge valve	10 bar
223	- Test port for charge pressure	

Oil supply

Once the engine has been started, then both the steering pump and the charge pump (201) are running. A proportion of the oil quantity on the suction side of the charge pump (201) is fed over the return line of the steering (144) and to the oil cooler (124). The rest of the oil from the charge pump (201) flows out of the purge return through the housing of the pump (217) and then back to tank (1).

Charge pressure circuit

The charge pressure builds up due to the charge pump (201), pumping oil through the filter (202) and against the pressure relief valve (205). Depending on the spring adjustment in the valve (205), the oil will be pressurised and returned to tank.
The charge pressure stands at the servo control valve (213) and at the multifunction valve (211/212). When the pump (217) is not swashed, then the charge pressure flows over the valve in the multifunction valves (211/212) on both sides of the high-pressure circuit.

https://truckmanualshub.com/

Circuit diagram for the LINDE hydrostatic drive

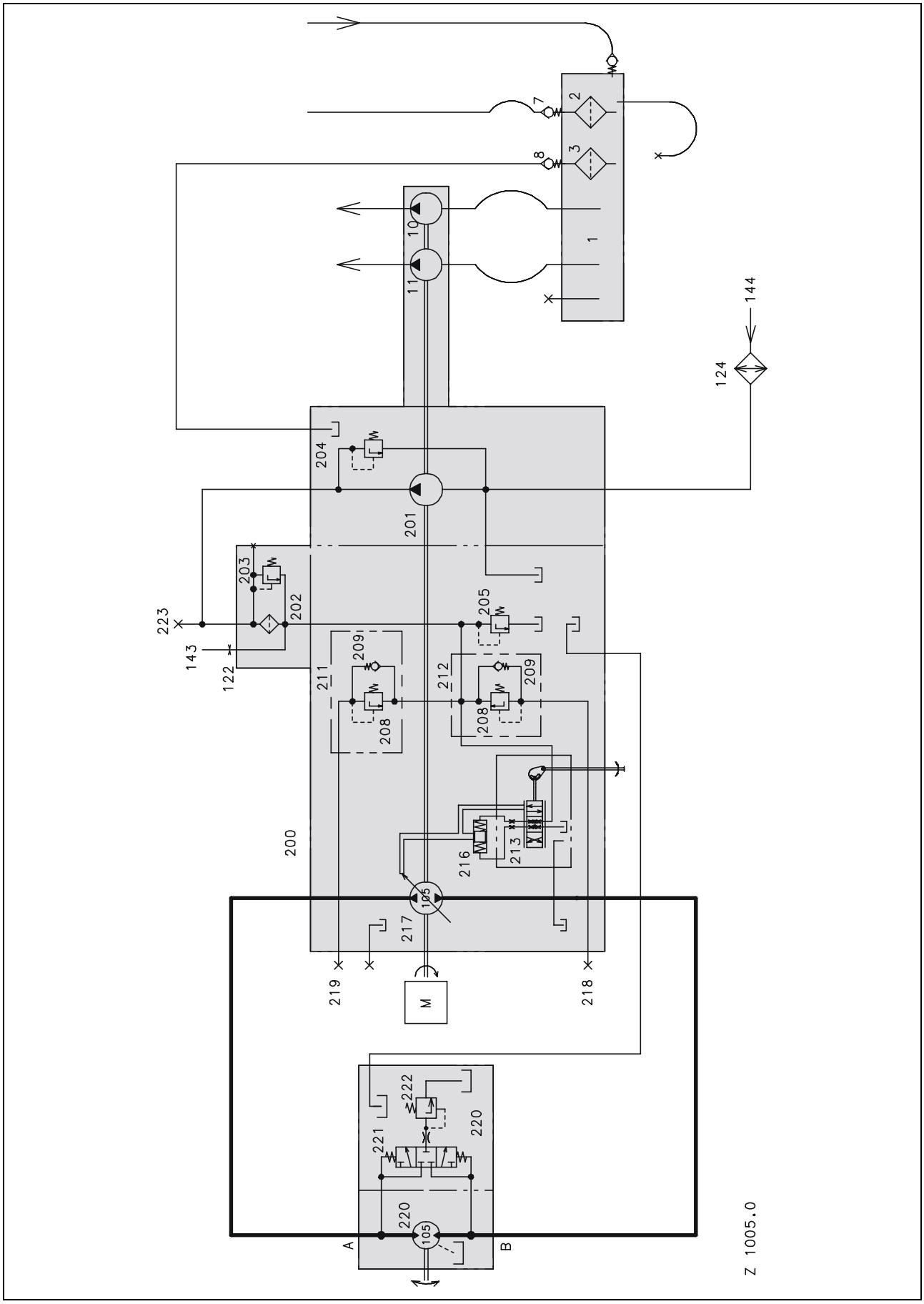

https://truckmanualshub.com/

Servo adjustment

When the servo valve (213) is operated by the cable from the hydrostatic lever, then it moves out of the neutral position in one direction or the other. Depending on the direction of travel selected, will determine the direction of the servo ram (216) will loose pressure, whereas the second servo ram is connected to the charge pressure circuit.
The movement of the swash plate is determined by the pressure difference between the two servo rams.
The servo ram (216) will then adjust the swash plate in the pump (217), but only the amount selected on the hydrostatic lever, and a mechanical response to the angle is delivered to the servo control valve (213). The mechanical response balances the control spool in the control valve (213) and so the pressure remains on the edge, thus ensuring that the swash angle remains.

High-pressure circuit

As soon as the pump (217) is swashed, there is an axial movement of the pump components. Due to the axial movement the oil in the cylinder area of the rotors is displaced and acts on the motor (220) which converts this energy into a rotational motion by using the support against the swash plate.
The relative suction side of the pump (217) is pressurised via the charge pressure from the relative valve in the multifunction valve (211/212). This ensures that the pump oil supply is maintained, irrespective of the internal leaks.

On the suction side of the pump (217) as well as on the return side of the motor (220), there is always charge pressure, should this become the high-pressure and not the low-pressure side.

High-pressure control

Should the system pressure climb over the tolerated figure, then the excessive pressure will be discharged over the high-pressure relief valve (211/212) in the charge pressure circuit.
The high-pressure control should only momentarily response since the excessive oil flow that must be displaced via the preloaded valves can easily overheat the system.

Purge control

In the relative high-pressure side, the shuttle valve (221) in the motor (220) is switched, so that the relative low-pressure side has a connection to the motor housing via the purge valve (222). Because of the fact that the pressure setting of the purge valve (222) is lower than that of the charge pressure control (205), a constant oil flow is present through the purge valve (222) and the charge pump (201).

https://truckmanualshub.com/

8.2 Layout of the components

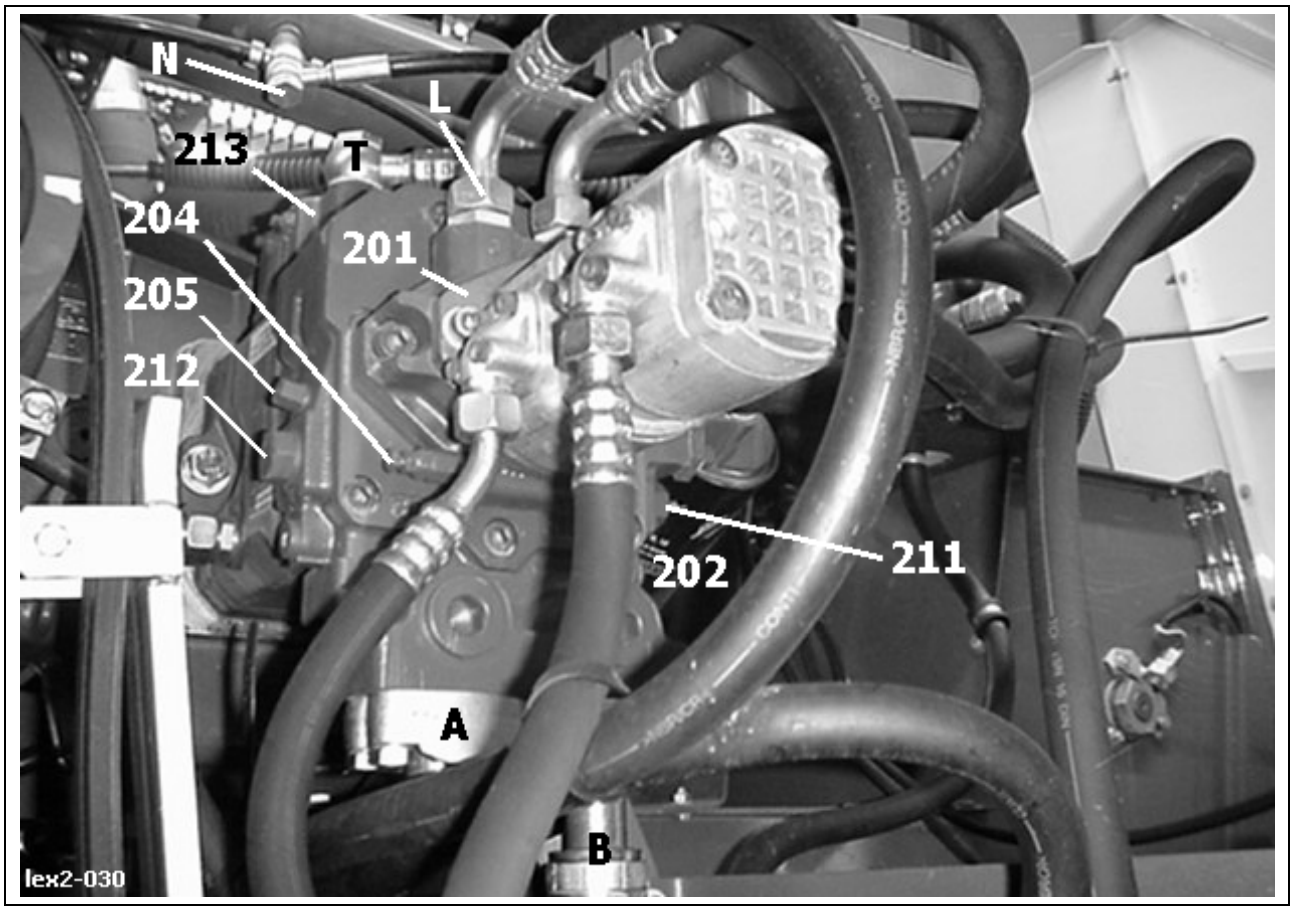

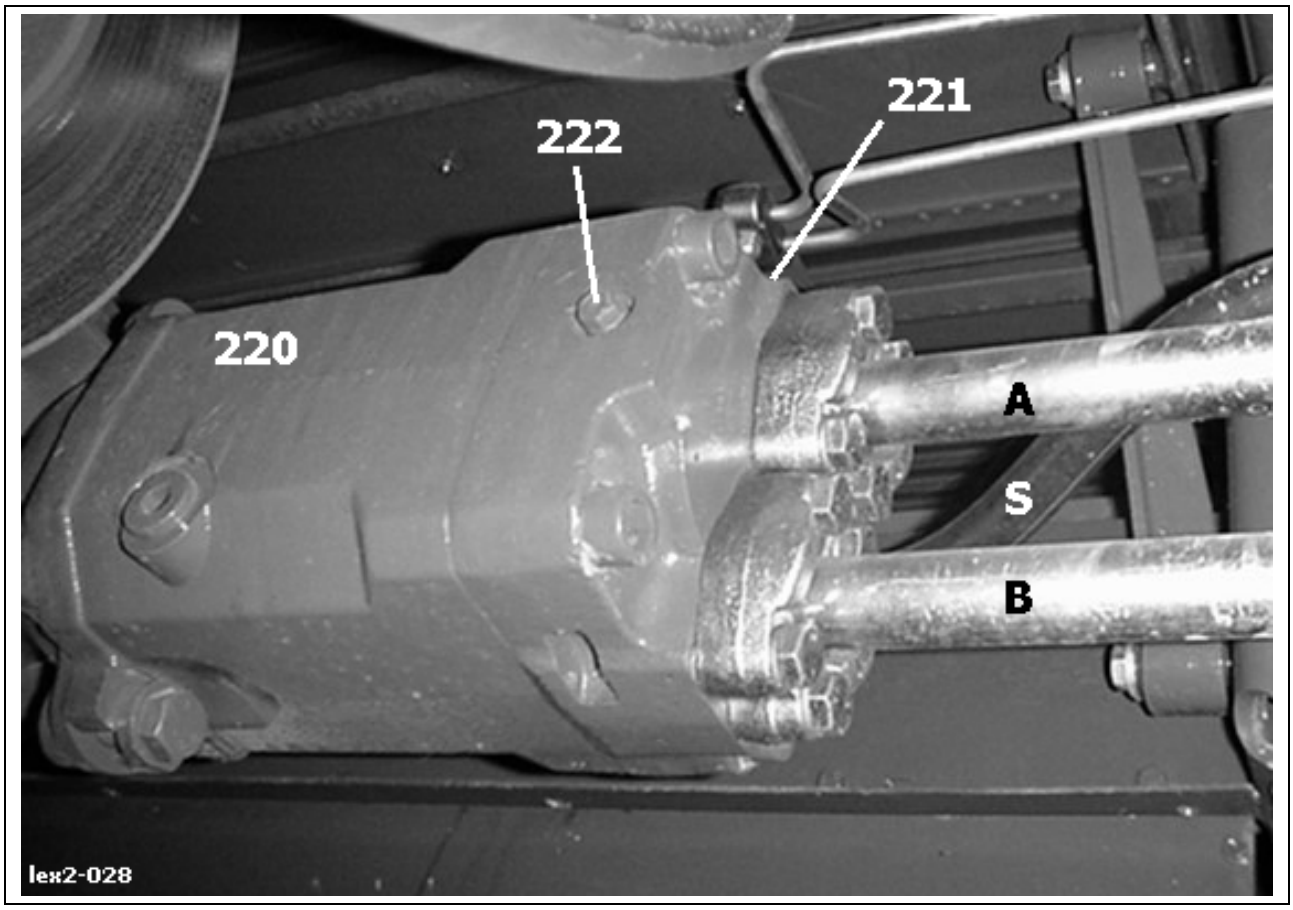

https://truckmanualshub.com/

Key to diagram

201	- Charge pump	22 cm³
202	- Filter cartridge	10 µm
204	- Cold start valve	28 ± 1 bar
205	- Charge pressure, pressure relief valve	$23_{-2.5}$ bar
211	- High pressure and filling valve, reverse	420 bar
212	- High pressure and filling valve, forwards	420 bar
213	- Servo control valve	
220	- Fixed displacement motor	HMF 105
221	- Shuttle valve	
222	- Purge valve	10 bar

A	- Forwards high pressure
B	- Reverse high pressure
T	- Connection to tank
L	- Oil cooler for the charge pump
S	- Purge and leak oil from motor to pump housing
N	- Connection to low pressure hydraulics

https://truckmanualshub.com/

8.3 Measurement ports LEXION 410-405

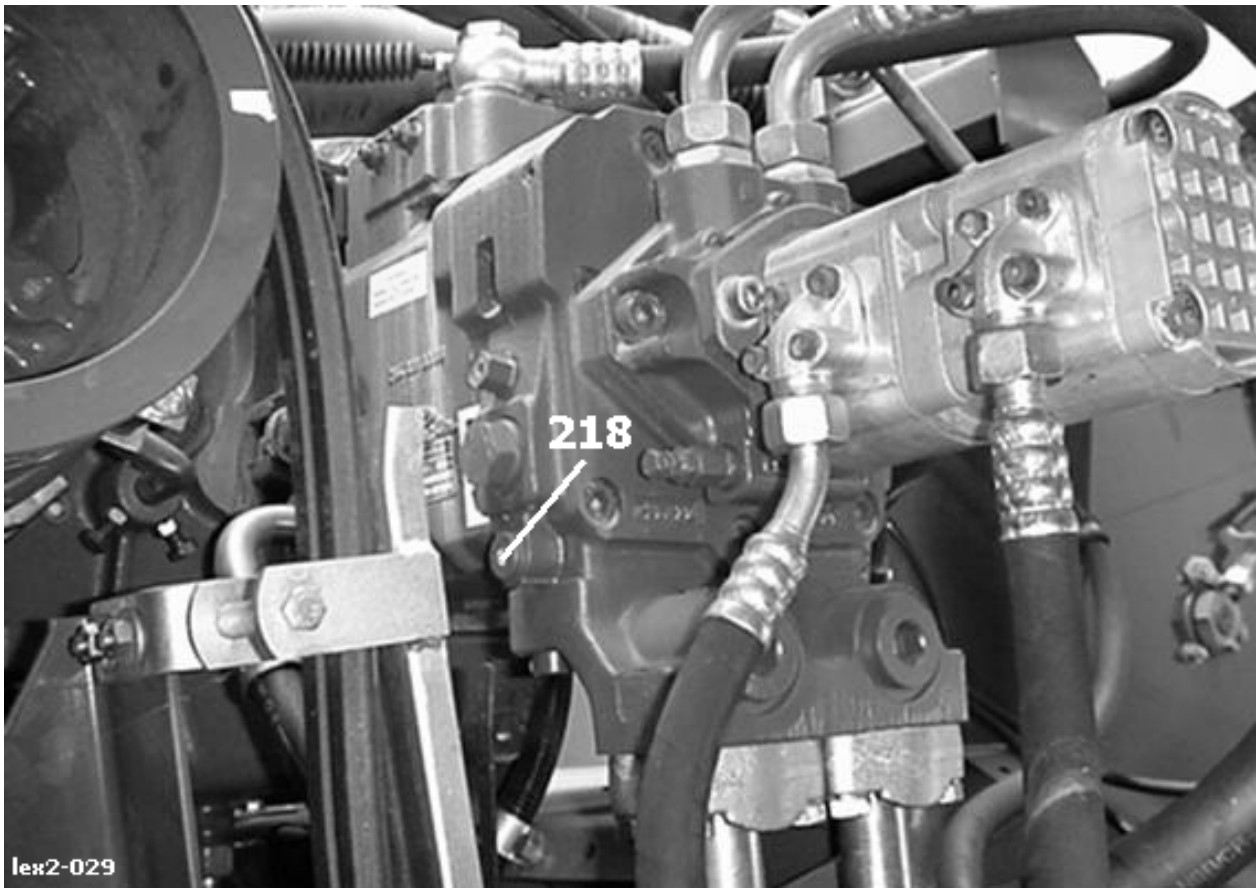

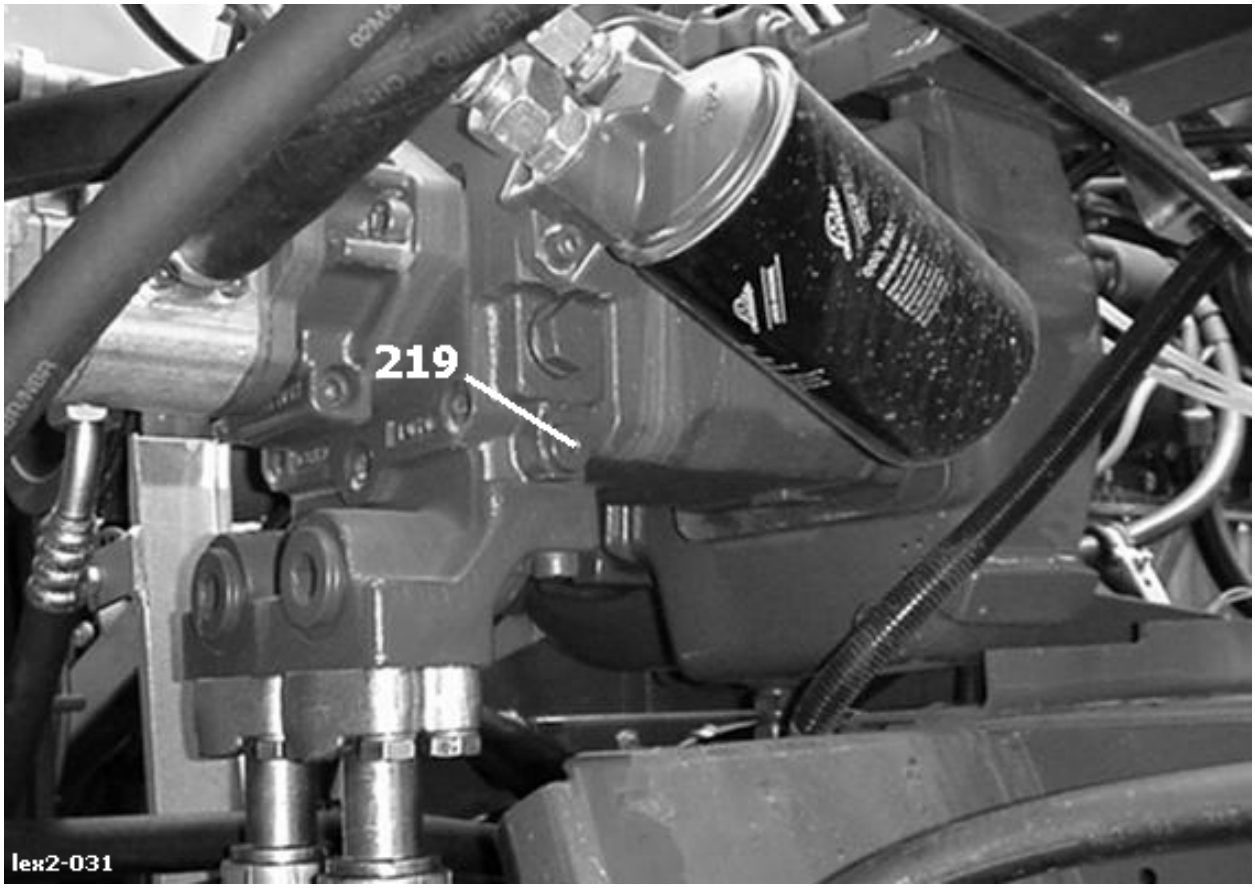

https://truckmanualshub.com/

Key to diagram

218 - Test port high pressure forwards M3
219 - Test port high pressure reverse M4

The charge pressure can be checked on the relative low-pressure side (M3/M4) in the high-pressure circuit.

Pressure settings

M3 - M14x1.5 . . . . . $23_{-2.5}$ - 420 bar
M4 - M14x1.5 . . . . . $23_{-2.5}$ - 420 bar

Mini-test connector M14 x 1.5 = **238 711.0** with **683 656.1**

Charge pressure – pressure relief valve

The setting of **$23_{-2.5}$ bar** for the charge pressure relief valve can be adjusted over the relative spring or shims.

Cold start valve

In this application the cold start valve has no role. The leak oil from the pump is returned to the oil cooler, which effectively means that the cold start valve is parallel to the charge pressure, pressure relief valve. The valve is set to **28 bar**, outside the practical valves.

High pressure, pressure relief valve

The high pressure, pressure relief valve, is a combination of pressure relief and filling valve and is set for **420 bar**. The relative pressure value is stamped into the valve housing.

Purge valve

The purge valve is set to a pressure of **10 bar**. The amount of oil dissipated is dependant on the restrictor in the valve unit, and would normally discharge **about 20 to 25 l/min** of oil at normal engine speed. The system will purge **about 2 to 3 l/min** of oil, thus the purge valve must be capable of handling that.

Housing pressure

The housing pressure can be measured both at the housing of the fixed displacement motor and at the adjustable pump. The housing pressure must not exceed **1.5 bar.**

Note: All measurements and adjustments must be carried out with the engine at idle speed and the oil at working temperature of approx. 60°C.

https://truckmanualshub.com/

8.4 Pump
HPV 105

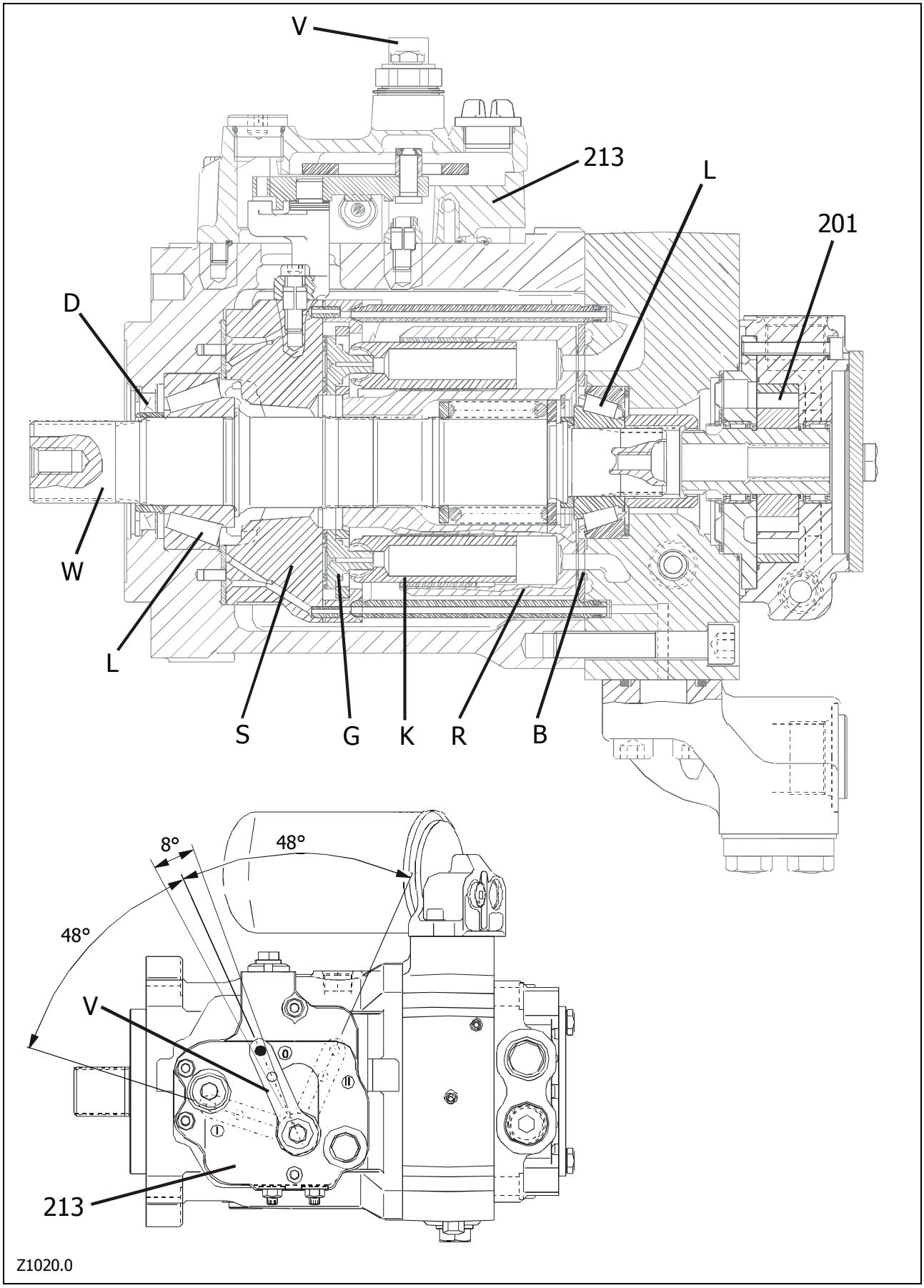

https://truckmanualshub.com/

Key to diagram

201	- Charge pump	22 cm³
213	- Servo control valve	
B	- Control floor	
D	- Shaft seal	
G	- Slipper	
K	- Plunger	
L	- Bearing	
R	- Cylinder rotor	
S	- Swash plate	
V	- Control lever	
W	- Drive shaft	

Function
(see also page 8-2)

As soon as the engine is started, then the cylinder rotor (R) with those nine radials on the drive shaft (W), the plunger (K) and the charge pump (201) are urged on. The plunger (K) due to the fact that on both sides of the high pressure (H) stands charge pressure, the slippers (G) are pressed onto the swash plate (S).

By operating the servo control valve (213) the servo cylinder (216) is moved which moves the swash plate (S) so that the desired direction and speed is selected. Because of the swash movement, the plungers (K) experience an axial loading, which causes the oil to flow in the cylinder area, the pressure then increases to overcome the motors resistance.
As soon as the complete quantity of oil in the cylinder area is displaced, the rotating rotor (R) and plunger (K) are pressed back against the slope of the swash plate (S) on the low-pressure side as a consequence of the charge pressure.
The cylinders in the rotor (R) are on the diminishing side filled up one after the other (low pressure) and then turns this oil quantity on the steep side (high pressure) against the motor.
Depending on the direction, the swash plate (S) can be swashed in one direction or the other, which means that either side can be high pressure and low pressure. The speed is dependent on the oil quantity and therefore on the amount the swash plate has been swashed. The hydrostatic lever adjusts the swash angle via the mechanical response on the swash plate (S) on the servo control valve (213).
The low-pressure side and the high-pressure side are separated by the control floor (B). To ensure a good seal, the cylinder rotor (R) is pressed against the control floor (B) by a spring.

The exact adjustment of the swash plate in the neutral position is done by the pressure springs. This adjustment is carried out by the factory and can not be corrected from outside.

A notch on the servo control housing marks the position of the control lever (V) on the splined shaft. The position in neutral position of the servo control is of an angle of 8° from the adjustment area covered.

https://truckmanualshub.com/

Pump

Servo control valve

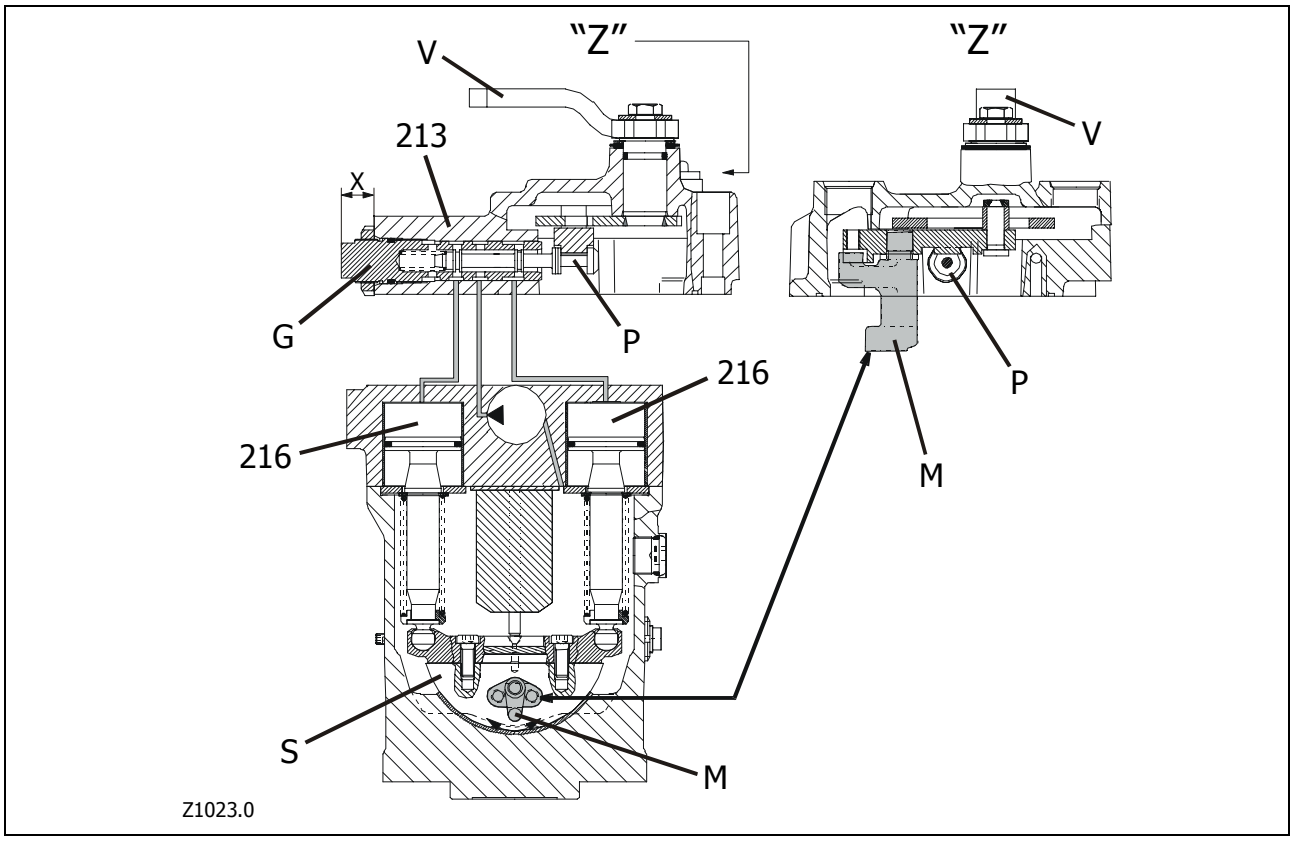

Pressure relief valve and filling valve

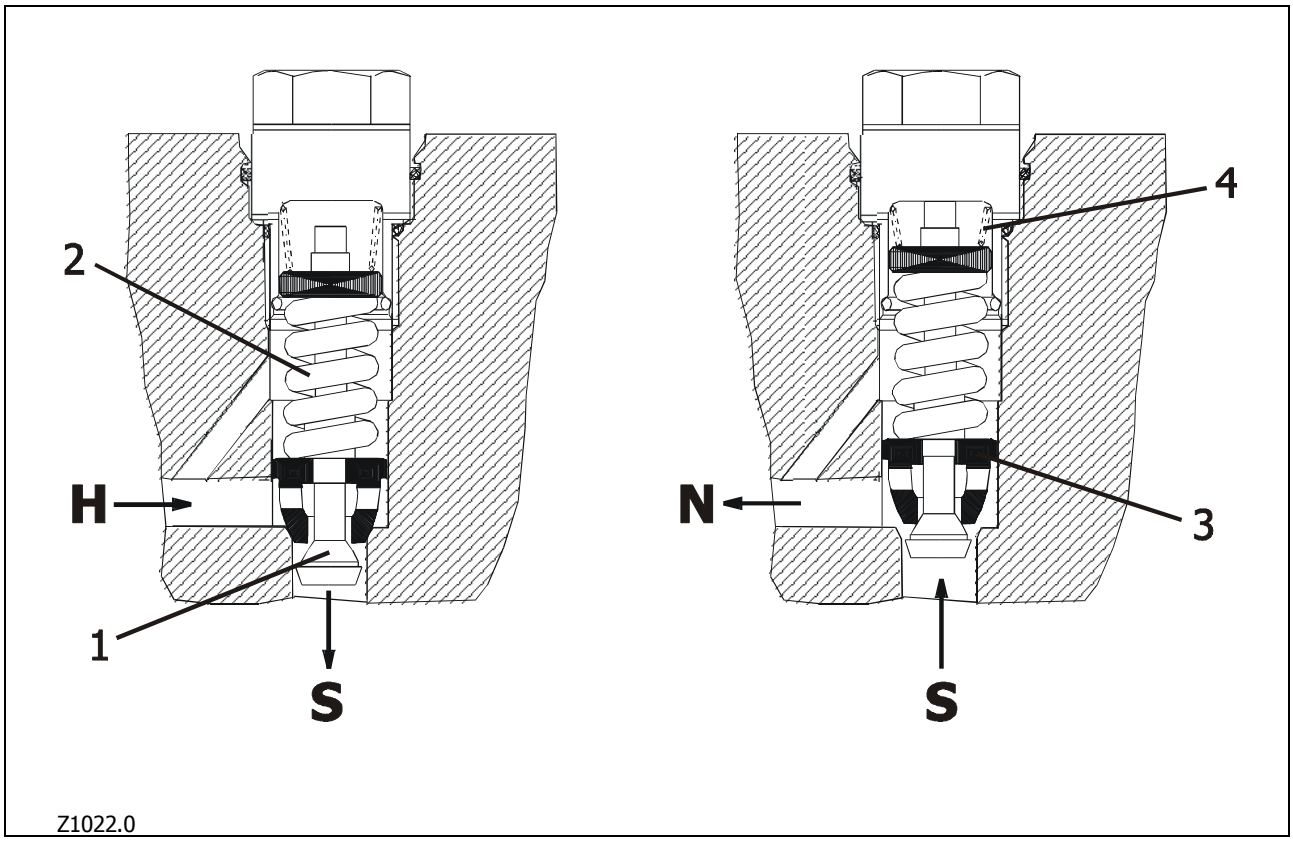

https://truckmanualshub.com/

Servo control valve

In the neutral position of the servo control valve (213), both servo rams (216) have pressure applied, so the swash plate (S) is stable in each position.
The cable from the hydrostatic lever acts on the control lever (V), which in turn moves the swash plate (P) in the servo control valve (213) out of the neutral position and in one or another direction. This causes one of the servo rams (216) to be pressure-relieved, and the other to maintain charge pressure. The movement on the swash plate (S) is therefore the same as the pressure difference between the servo rams (216).

The servo ram (216) swashes the pump only by the amount selected by the control lever (V), and the mechanical response (M) ensures the swash angle of the control spool (P) in servo control valve (213) which acts on the edge thus holding the angle.

This mechanical response (M) balances the control spool (P) in the servo valve (213) on the control edge to the neutral setting. The activated swash angle remains due to equal pressures in the control rams (216).

Adjusting the neutral hydraulic setting:

By mechanically adjusting the control lever (V), the mechanical neutral position of the pump can be matched, the control spool (P) in the control valve is set to the threaded insert (G)
The insert (G) should be adjusted next to a length of **14.75 mm** to the housing of the servo control valve (213) (X). When measuring the pressure on both sides of the high pressure circuits, turn the insert (G) in both directions and find the middle position.

High-pressure control valve and filling valve

I High-pressure control:

The high pressure (H) stands at the hole in the valve plate on the valve (1). Should the system pressure exceed the limits, then the oil forces the valve (1) against the spring (2) and the pressure is released out through the bottom into the charge pressure circuit (S).

II Filling:

As soon as there is no high pressure (H) against the valve plate, then the charge pressure (S) forces the complete valve (3) up against the spring (4) and allows the flow from the charge pressure (S) to the low pressure side (N).

https://truckmanualshub.com/

8.5 Motor
HMF105

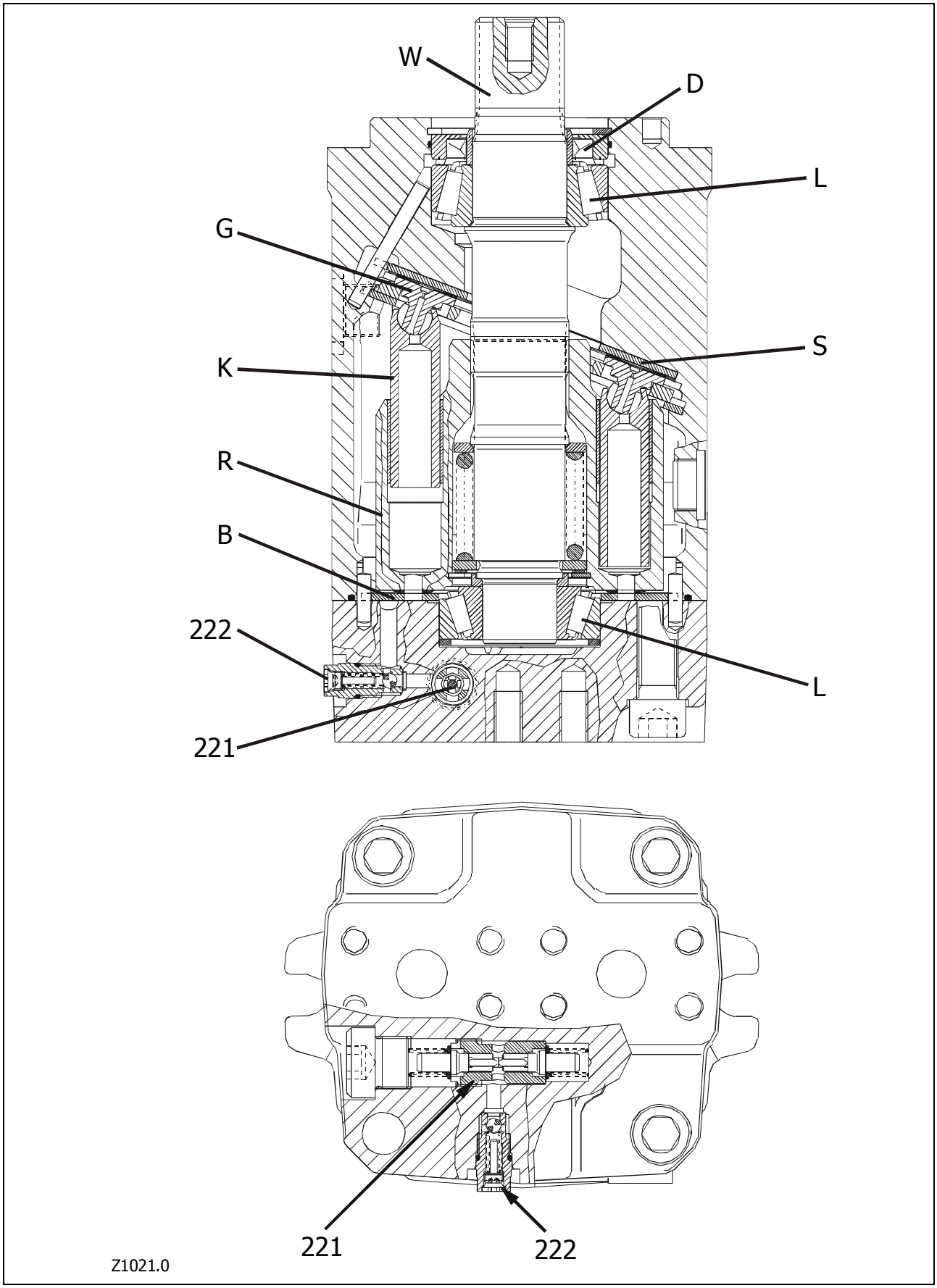

https://truckmanualshub.com/

Key to diagram

221 - Shuttle valve
222 - Purge valve . . . . . 10 bar

B - Control floor
D - Shaft seal
G - Slipper
K - Plunger
L - Bearing
R - Cylinder rotor
S - Swash plate
W - Drive shaft

Function
(see also page 8-2)

As soon as the engine is started, then the charge pump is energised. The plungers (K) in the cylinder rotor (R) of the motor, due t the fact that on both sides of the high pressure lines is charge pressure, the slippers (G) are pressed against the swash plate (S).

As soon as the pump is swashed, then the pressure is built up against the nine plungers (K) in the cylinder rotor (R) which is connected to the drive shaft (W). The plungers (K) press against the swash plate (S) and the energy is then used to overcome the resistance on the drive shaft (W).
The rotation is dependant on the direction of the oil flow which is created by the swash angle of the pump. The high pressure side and the low pressure side can be alternated. The speed is governed by the amount of oil and that is dependant on how large an angle has been selected within the pump.

The high pressure and the low pressure are separated by the control floor (B). To seal, the cylinder rotor (R) presses against the control floor (B) using springs.

Dependant on the high pressure side, within the high pressure circuit, the shuttle valve (221) in the motor is switched, so that the respective low pressure is purged (222) over the connection to the motor housing. Because the pressure setting of the purge valve (222) is smaller than that of the charge pressure, oil constantly flows via a restrictor in the purge valve (222).

https://truckmanualshub.com/

8.6 Maintenance

Filling instructions

1. - Put the machine in third gear
2. - Switch on the four wheel drive
3. - Pull on the handbrake
4. - Connect a test gauge to both sides of the high-pressure lines (M1 and M2)
5. - Fill the tank with hydraulic oil
6. - Remove the relay for engine watch dog, or remove the wire loop
7. - Turn the engine over quickly with the starter motor.
8. - Check the oil level and correct
9. - Continue the procedure until one of the pressure sides reaches about 10 bar
10. - Reconnect the relay for the engine watch dog, or the wire loop
11. - Start the engine and run in idle
12. - Load the system for approx. 1 min. to 50-150 bar in the forwards direction
13. - Load the system for approx. 1 min. to 50-150 bar in the reverse direction
14. - Stop the engine
15. - Check the oil level and if necessary top up
16. - Put the machine into neutral
17. - Start the engine and run in idle
18 - Swash the hydrostatic pump for approx. 2 min. in the forwards direction
19. - Swash the hydrostatic pump for approx. 2 min. in the reverse direction
20. - Stop the engine
21. - Check the oil level and if necessary top up

Test instructions

1. - Connect a test gauge to both high-pressure sides
2. - Apply the parking brake
3. - Warm the system to a working temperature of **approx. 60°**
4. - Bring the hydrostatic lever to the neutral position
5. - Start the engine and run in normal speed
6. - Check that the charge pressure is at **$23_{-2.5}$ bar**
7. - Check that the charge pressure difference on either side does not exceed **max. 3 bar**
8. - Completely swash the pump in one direction
9. - Pressure drop on the low-pressure side: **max. 4 bar**
10. - Switch the engine to idle
11. - Select third gear
12. - Operate the system brakes
13. - Swash the hydrostatic pump for a max. of 5 sec slowly forwards
14. - Check the high pressure reading **420 to 450 bar**
15. - Check the low pressure reading **min. 14 bar**
16. - Swash the hydrostatic pump for a max. of 5 sec slowly backwards
17. - Check the high pressure reading **420 to 450 bar**
18. - Check the low pressure reading **min. 14 bar**
19. - Stop the engine
20. - Remove the test gauges

https://truckmanualshub.com/

Index

Hydraulics

A

Page

AUTO-CONTOUR cross-levelling 4-20
AUTOPILOT 2-14

C

Chain greasing for the unloading system 6-22
Circuit diagram for 4Trac drive 7- 4
Circuit diagram for additional functions of rotor machines 4- 6
Circuit diagram for additional functions of straw walker machines 4- 2
Circuit diagram for AUTOPILOT 2- 4
Circuit diagram for folding cutterbar 5- 6
Circuit diagram for hydraulic reel drive 4-12
Circuit diagram for knife drive – rape 5- 8
Circuit diagram for LINDE hydrostatic drive 8- 2
Circuit diagram for low-pressure hydraulics 6- 2
Circuit diagram for maize picker 5-10
Circuit diagram for rotor machines 3- 6
Circuit diagram for SAUER hydrostatic drive 7- 2
Circuit diagram for standard cutterbar 5- 2
Circuit diagram for steering 2- 2
Circuit diagram for straw and chaff spreader 4-10
Circuit diagram for straw walker machines 3- 2
Circuit diagram for VARIO cutterbar 5- 4
Cross-levelling, AUTO-CONTOUR 4-20
Cutterbar folding function 5-30
Cutterbar raise/lower 3-16
Cutterbar spring locking 4-30

D

Diagnostics 7-30
Drive CLAAS 4-Trac 7-24
Drive of front attachment 6-16
Drive of radiator chaff screen 4- 2
Drive of straw and chaff spreader 4-38
Drive of Uni-spreader 4-32

E

Engine speed 6-18

https://truckmanualshub.com/

F

Page

Filling quantities 1- 3
Filters 1- 3
Front attachment dampening 4-42
Front attachment quick release coupling 3-44
Front attachment raise/lower 3-16
Front attachment reverse 3-40

G

General hydraulic problems 1- 3
Grain tank unloading aid 4-40
Grain tank unloading 6- 2

H

Hydraulic pumps 1- 3
Hydraulics, general 1- 2
Hydrostatic drive LINDE 8- 2
Hydrostatic drive SAUER 7- 2

K

Knife drive – rape 5-34

L

Low-pressure hydraulics 6- 2

M

Main valve 3-16
Maintenance of LINDE hydrostatic drive 8-16
Maintenance of SAUER hydrostatic drive 7-28
Maize picker 5-38
Measurement ports – LINDE hydrostatic drive 8- 8
Measurement ports – SAUER hydrostatic drive 7-10
Moisture measurement yield meter 6- 2
Motor - LINDE hydrostatic drive 8-14
Motor - SAUER hydrostatic drive 7-22

https://truckmanualshub.com/

O

Page

Oil change 1- 3
Oil filter 1- 3
Oil pressure 1- 3
Oil specification 1- 3
Oil tank 1- 2

P

Position of components –
Additional functions of working hydraulics 4-14
Position of components – LINDE hydrostatic drive 8- 6
Position of components – Low-pressure hydraulics 6- 8
Position of components – SAUER hydrostatic drive 7- 6
Position of components – Steering 2- 6
Position of components – Working hydraulics of basic machine . 3-10
Position of components –
Working hydraulics of front attachment 5-14
Pump - LINDE hydrostatic drive 8-10
Pump - SAUER hydrostatic drive 7-18
Pumps 1- 4

Q

Quick release coupling, front attachment 3-44

R

Radiator chaff screen drive 4- 2
Reel drive (hydraulic) 4-44
Reel fore and aft adjustment 5-24
Reel raise and lower adjustment 5-18
Returns valve 3-16
Rotary chaff screen drive 3- 2
Rotary coupling 4-28

S

Servo line 6-20
Speed regulation, intake housing and front attachment 4-24
Speed regulation, reel (hydraulic) 4-44
Speed regulation, rotor 4-26
Speed regulation, threshing drum 3-36
Spring locking, cutterbar 4-30
Steering hydraulics 2- 2
Straw and chaff spreader drive 4-38
Straw chopper adjustment 4-24
Swivelling the unloading auger 3-24
System components of SAUER hydrostatic drive 7-14

https://truckmanualshub.com/

T

Page

Table adjustment, VARIO cutterbars 5-28
Threshing concave adjustment 3-30
Threshing mechanism coupling 6- 2
Track tension 4-46

U

Uni-spreader and straw chopper adjustment 4-24
Uni-spreader drive 4-32

V

Valve cartridges 3-12
Valves for low-pressure hydraulics 6-10
VARIO cutterbar, table adjustment 5-28

W

Working hydraulics 3- 2

Y

Yield meter, moisture measurement 6- 2

https://truckmanualshub.com/

Following the policy of the CLAAS KGaA mbH to improve their products as technical developments continue, CLAAS reserve the right to make alterations which must not necessarily correspond to text and illustrations contained in this publication, and without incurring obligation to alter any machines previously delivered.

Technical data, dimensions and weights are given as an indication only. Responsibility for errors or omissions not accepted.

Reproduction or translation of this publication, in whole or part, is not permitted without the written consent of the CLAAS KGaA mbH.

All rights under the provision of the Copyright Act reserved.

CLAAS KGaA mbH
33426 Harsewinkel
Germany

Our contribution to the environment: CLAAS have printed this manual on 100 % chlorine free paper.

https://truckmanualshub.com/

CLAAS KGaA mbH
Postfach 1163
33426 Harsewinkel
Tel. +49 (0)5247 12-0
www.claas.com

297 595.4
ST-HY LEXION 480-405
EN - 04.04 - BEV
Printed in Germany