https://truckmanualshub.com/

MANITOU
HANDLING YOUR WORLD

647369 EN (01/03/2017)

78 SEC 2
100 SEC 2
120 SE 2

OPERATOR'S MANUAL
(ORIGINAL INSTRUCTIONS)

https://truckmanualshub.com/

IMPORTANT

Carefully read and understand this instruction manual before using the lifting platform.

It contains all information relating to operation, handling and lifting platform equipment, as well as important recommendations to be followed.

This document also contains precautions for use, as well as information on the servicing and routine maintenance required to ensure the lifting platform's continued safety of use and reliability.

WHENEVER YOU SEE THIS SYMBOL IT MEANS:

⚠ IMPORTANT ⚠

WARNING ! BE CAREFUL ! YOUR SAFETY OR THE SAFETY OF THE LIFTING PLATFORM IS AT RISK.

- This manual has been produced on the basis of the equipment list and the technical characteristics given at the time of its design.
- The level of equipment of the lifting platform depends on the options chosen and the country of sale.
- According to the lifting platform options and the date of sale, certain items of equipment/functions described herein may not be available.
- Descriptions and figures are non binding.
- MANITOU reserves the right to change its models and their equipment without being required to update this manual.
- The MANITOU network, consisting exclusively of qualified professionals, is at your disposal to answer all your questions.
- This manual is an integral part of the lifting platform.
- It is to be kept in its storage space at all times for ease of reference.
- Hand this manual to the new owner if the lifting platform is resold.

647369 (01/03/2017)
78/100 SEC 2 / 120 SE 2

https://truckmanualshub.com/

1st ISSUE	22/07/2011	
UPDATED	20/10/2011	1-23 ; 1-24 ; 2-8 <-> 2-10
	13/01/2012	1-24 ; 1-25
	25/04/2012	2-8 <-> 2-10 ; 2-19 <-> 2-21 ; 2-25 <-> 2-29 ; 2-31 ; 2-37 ; 2-40 ; 3-7 <-> 3-9 ; 3-11 <-> 3-17
	23/10/2014	2-22 ; 2-23 ; 2-32 ; 2-33 ; 3-9 ; 3-10 <-> 3-13
	20/03/2015	1-4 ; 1-5 ; 1-8 ; 1-12 ; 1-15 ; 1-20 ; 1-25 ; 1-28 ; 2-4 ; 2-8 <-> 2-10 ; 2-12 ; 2-14 ; 2-16 ; 2-19 ; 2-24 <-> 2-29 ; 2-41 ; 3-7 <-> 3-9 ; 3-12 ; 3-13 ; 3-18
	23/06/2015	UPDATE EN280
	01/03/2017	1-20 ; 1-22 <-> 1-30 ; 2-4 ; 2-5 ; 2-8 <-> 2-10

Manitou BF S.A Limited liability company with a Board of Directors.
Head office: 430, Rue de l'Aubinière - 44150 Ancenis - FRANCE
Share capital: 39,548,949 euros
857 802 508 RCS Nantes.
Tel: +33 (0)2 40 09 10 11
www.manitou.com

This manual is for information purposes only. Any reproduction, copy, representation, recording, transfer, distribution, or other, in part or in whole, in any format is prohibited. The plans, designs, views, commentaries and instructions, even the document organization that are found in this document, are the intellectual property of MANITOU BF. Any violation of the aforementioned may lead to civil and criminal prosecution. The logos as well as the visual identity of the company are the property of MANITOU BF and may not be used without express and formal authorization. All rights are reserved.

647369 (01/03/2017)
78/100 SEC 2 / 120 SE 2

https://truckmanualshub.com/

1 - OPERATING AND SAFETY INSTRUCTIONS

2 - DESCRIPTION

3 - MAINTENANCE

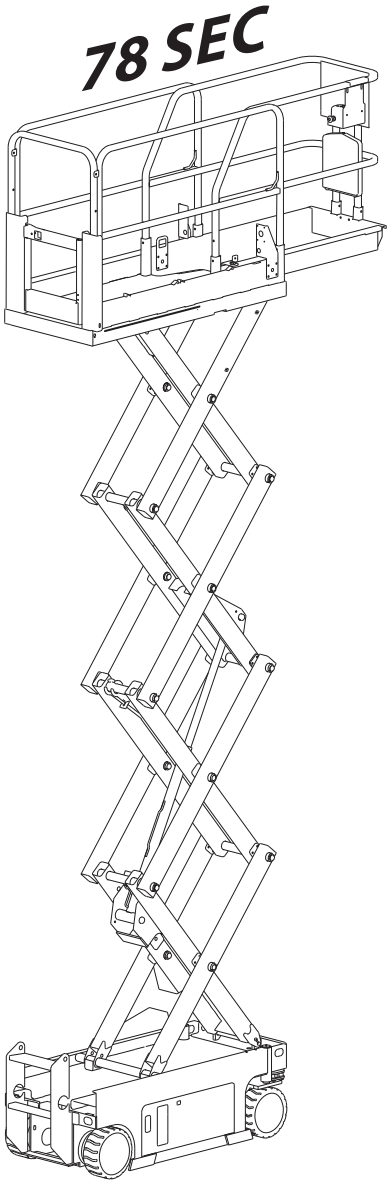

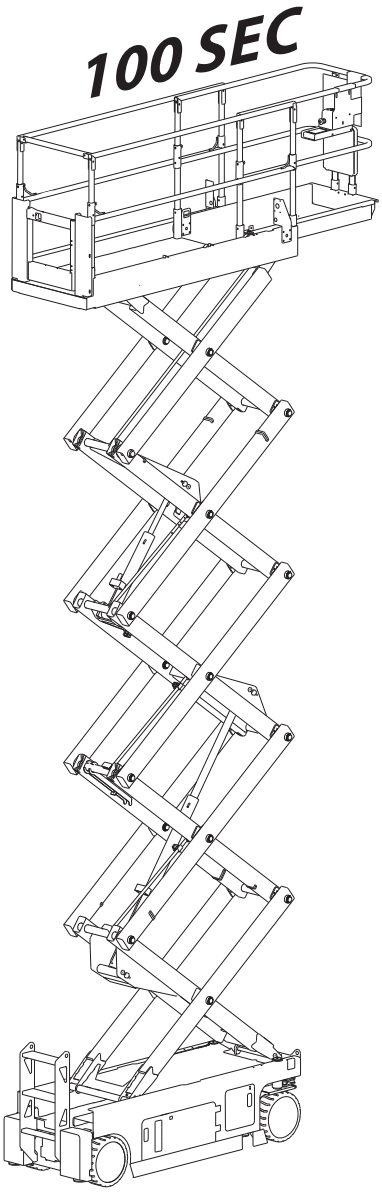

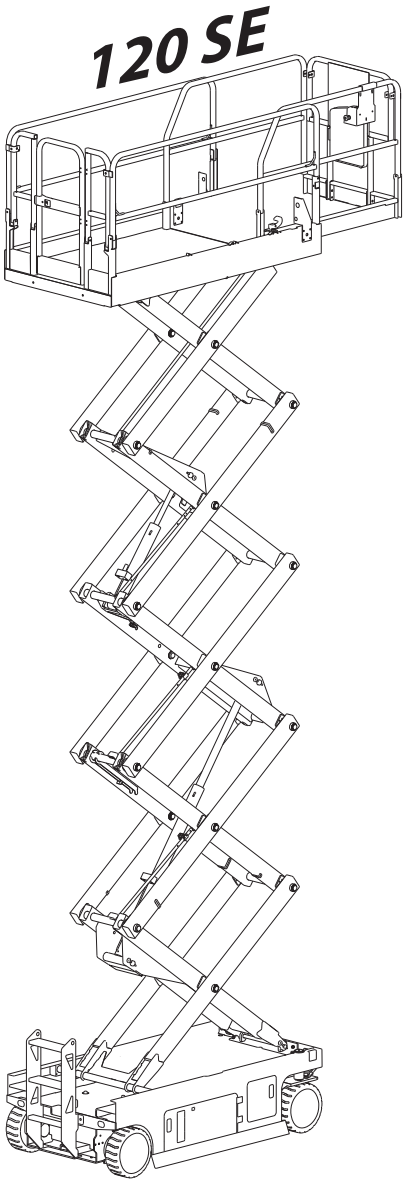

647369 (01/03/2017)
78/100 SEC 2 / 120 SE 2

https://truckmanualshub.com/

1 - OPERATING AND SAFETY INSTRUCTIONS

https://truckmanualshub.com/

https://truckmanualshub.com/

TABLE OF CONTENTS

INSTRUCTIONS TO THE COMPANY MANAGER **1-4**

PREAMBLE 1-4

LE SITE 1-4

THE OPERATOR 1-4

THE PLATFORM 1-4

THE INSTRUCTIONS 1-5

THE MAINTENANCE 1-5

INSTRUCTIONS FOR THE OPERATOR **1-6**

PREAMBLE 1-6

GENERAL INSTRUCTIONS 1-6

DRIVING INSTRUCTIONS 1-8

INSTRUCTIONS FOR WELDING AND BLOW TORCH WORK ON THE EXTERNAL STRUCTURE 1-15

PLATFORM MAINTENANCE INSTRUCTIONS **1-16**

GENERAL INSTRUCTIONS 1-16

MAINTENANCE 1-16

LUBRICANT AND FUEL LEVELS 1-16

LEVEL OF ELECTROLYTE IN THE BATTERY 1-16

HYDRAULIC 1-17

ELECTRICITY 1-17

WELDING ON THE ACCESS PLATFORM 1-17

WASHING THE PLATFORM 1-17

IF THE PLATFORM IS NOT TO BE USED FOR A LONG TIME **1-18**

INTRODUCTION 1-18

PREPARING THE PLATFORM 1-18

PROTECTING THE I.C. ENGINE 1-18

CHARGING THE BATTERIES 1-19

PROTECTING THE PLATFORM 1-19

BRINGING THE PLATFORM BACK INTO SERVICE 1-19

SCRAPPING THE NACELLE **1-20**

SAFETY DECALS **1-22**

647369 (01/03/2017)
78/100 SEC 2 / 120 SE 2

https://truckmanualshub.com/

INSTRUCTIONS TO THE COMPANY MANAGER

PREAMBLE

WHENEVER YOU SEE THIS SYMBOL IT MEANS :

WARNING ! BE CAREFUL ! YOUR SAFETY OR THE SAFETY OF THE PLATFORM IS AT RISK.

THE SITE

- Good personal control of the lifting platform's operating area reduces the risk of accidents:
  - The floor must not be unnecessarily broken or cluttered,
  - No excessive slopes,
  - Controlled pedestrian traffic, etc.

THE OPERATOR

- Only qualified, authorized personnel can use the platform. This authorization is given in writing by the appropriate person in the establishment with respect to the use of platform and must be carried permanently by the operator.

On the basis of experience, there are a number of possible situations in which operating the platform is contra-indicated. Such foreseeable abnormal uses, the main ones being listed below, are strictly forbidden.

- The foreseeable abnormal behaviour resulting from ordinary neglect, but does not result from any wish to put the machinery to any improper use.
  The reflex reactions of a person in the event of a malfunction, incident, fault, etc. during operation of the platform.
- Behaviour resulting from application of the "principle of least action" when performing a task.
- For certain machines, the foreseeable behaviour of such persons as : apprentices, teenagers, handicapped persons, trainees tempted to drive a platform, operator tempted to operate a truck to win a bet, in competition or for their own personal experience.
- The person in charge of the equipment must take these criteria into account when assessing whether or not a person will make a suitable driver.

OBTAIN INFORMATION ON :

- How to behave when there is a fire.
- The location of the nearest first aid kit and fire extinguisher.
- The emergency telephone numbers for calling (the doctors, ambulance, hospital and fire brigade).

THE PLATFORM

A - THE PLATFORM'S SUITABILITY FOR US

- MANITOU has ensured that this platform is suitable for use under the standard operating conditions defined in this operator's manual, with an overload test coefficient of 1,25 and an operational test coefficient of 1,1, as stipulated in standardised norm EN 280 for MPLPs (Mobile Personnel Lifting Platforms).
  Before commissioning, the company manager must make sure that the platform is appropriate for the work to be done, and perform certain tests (in accordance with current legislation).

B - ADAPTATING THE PLATFORM TO THE USUAL ENVIRONMENTAL CONDITIONS

- In addition to series equipment mounted on your platform, many options are available, such as : flashing light, working headlight, etc. Contact your dealer.
- Take into account climatic and atmospheric conditions of the site of utilisation.
  - Protection against frost (see chapter 3 - MAINTENANCE, LUBRICANTS page).
  - Adaptation of lubricants (ask your dealer for information).
  - I.C. engine filtration (see chapter 3 - MAINTENANCE, FILTER ELEMENTS page).

647369 (01/03/2017)
78/100 SEC 2 / 120 SE 2

https://truckmanualshub.com/

- The machines designed by MANITOU are designed to be used in the following temperature range:
  - Minimum temperature: -20°C
  - Maximum temperature: +45°C
- Special features are available, as an option, for particularly cold environments.

For operation under average climatic conditions, i.e. : between -15 °C and + 35 °C, correct levels of lubricants in all the circuits are checked in production. For operation under more severe climatic conditions, before starting up, it is necessary to drain all the circuits, then ensure correct levels of lubricants using lubricants properly suited to the relevant ambient temperatures. It is the same for the cooling liquid.

- A platform operating in an area without fire extinguishing equipment must be equipped with an individual extinguisher. There are solutions, consult your dealer.

Your platform is designed for outdoor use (see chapter: 2 - DESCRIPTION, CHARACTERISTICS pages) under normal atmospheric conditions and indoor use in suitably aerated and ventilated premises. It is prohibited to use the platform in areas where there is a risk of fire or which are potentially explosive (e.g. Refineries, fuel or gas depots, stores of inflammable products…). For use in these areas, specific equipment is available (ask your dealer for information).

C - Modifying the platform

- For your safety and that of others, you must not change the structure and settings of the various components used in your platform (hydraulic pressure, calibrating limiters, I.C. engine speed, addition of extra equipment, addition of counterweight, unapproved attachments, alarm systems, etc.) yourself. In this event, the manufacturer cannot be held responsible.
- Your lifting platform is delivered with standard wheels or all-terrain wheels. It is FORBIDDEN to switch from one type of wheels to another: RISK OF THE LIFTING PLATFORM BECOMING UNSTABLE.

The instructions

- The operator's manual must always be in good condition and kept in the place provided on the platform and in the language used by the operator.
- You must necessarily replace the instructions manual, as well as any plates or stickers, if they are no longer legible or are missing or damaged.

The maintenance

- Maintenance or repairs other than those detailed in the chapter 3 - MAINTENANCE must be carried out by qualified personnel (consult your dealer) and under the necessary safety conditions to maintain the health of the operator and any third party.

Your patform must be inspected periodically to ensure that it remains in compliance. The frequency of this inspection is defined by current legislation in the country in which the platform is use

- Example for France : The manager of the compagny using the platform must set up a maintenance book for each machine and keep up-to-date (Ministerial Order of 2nd March 2004).

https://truckmanualshub.com/

PREAMBLE

WHENEVER YOU SEE THIS SYMBOL IT MEANS :

WARNING ! BE CAREFUL ! YOUR SAFETY OR

THE SAFETY OF THE PLATFORM IS AT RISK.

The risk of accident while using, servicing or repairing your platform can be restricted if you follow the safety instructions and safety measures detailed in these instruction.

- Only the operations and manœuvres described in these operator's manual must be performed. The manufacturer cannot predict all possible risky situations. Consequently, the safety instructions given in the operator's manual and on the platform itself are not exhaustive.
- At any time, as an operator, you must envisage, within reason, the possible risk to yourself, to others or to the platform itself when you use it.

Failure to respect the safety and operating instructions, or the instructions for repairing or servicing your platform may lead to serious, even fatal accident.

GENERAL INSTRUCTIONS

A - operator's manual

- Carefully read and understand the operator's manual.
- The operator's manual must always be kept in the place provided for it on the platform and be written in the language used by the operator.
- Any operations or manoeuvres not described in the operator's manual must necessarily be forbidden right from the start.
- Follow the safety advice and the instructions on the platform.
- Ypu must necessarily replace the operator's manual, as well as any plates or stickers, if they are no longer legible or are damaged.
- A second operator must necessaily be present on the ground as a safety measure when using the platform.
- Familiarise yourself with the platform on the terrain it has to travel over.
- The machine must also be used in accordance with good engineering practice.
- Do not use the platform if the wind speed is over 45 km/h. The platform's arms must not be subjected to a lateral force of more than 40 kg (platforms for indoor use must not be used outside the building).

B - AUTHORIZATION FOR USE IN FRANCE
(OR SEE CURRENT LEGISLATION IN OTHER COUNTRIES)

- Only qualified, authorized personnel may use the platform. This authorization is given in writing by the appropriate person in the company, in charge of using the platform, and must be permanently carried by the operator.
- The operator is not competent to authorise the driving of the platform by another person.

https://truckmanualshub.com/

C - Maintenance

- The operator must immediately advise his superior if his platform is not in good working order or does not comply with the safety notice.
- The operator is prohibited from carrying out any repairs or adjustments himself, unless he has been trained for this purpose. He must keep the platform properly cleaned if this is among his responsibilities.
- The operator must carry out daily maintenance (see chapter : 3 - MAINTENANCE, A - DAILY pages).
- The operator must ensure tyres are adapted to the nature of the ground (see area of the contact surface of the tyres in the chapter : 2 - DESCRIPTION : CHARACTERISTICS pages). There are optional solutions, consult your dealer.

Do not use the platform if the tyres are damaged or excessively worn, because this could put your own safety or that of others at risk, or cause damage to the platformk itself.

In the case of electric platforms, the operator must ensure that:
- The batteries are not replaced with lighter ones (compromising stability).
- Safety goggles are always worn when charging the batteries.
- The batteries are not charged in an explosive environment.
- There is no smoking and no naked flame directed towards the batteries when they are being handled during removal, re-installation and checking the levels.

D - Modifying the platform

- For your safety and that of others, you must not change the structure and settings of the various components used in your platform yourself:
  - hydraulic pressure,
  - calibrating limiters,
  - I.C. engine speed,
  - addition of extra equipment,
  - addition of counterweight,,
  - unapproved attachments,
  - alarm systems, etc...
- In this event, the manufacturer cannot be held responsible.

Your lifting platform is delivered with standard wheels or all-terrain wheels. It is FORBIDDEN to switch from one type of wheels to another: RISK OF THE LIFTING PLATFORM BECOMING UNSTABLE.

E - IC platform axles

- Standard axle :

The chassis is rigid, so the platform can have a ground reach on only three wheels.

- Oscillating axle (if this option is available) :

An oscillating axle enables the platform, when in transport position, to have a ground reach on four wheels. When moving in working position over uneven terrain, the oscillating axle is locked (the chassis is rigid) so the platform can have a ground reach on only three wheels.

https://truckmanualshub.com/

DRIVING INSTRUCTIONS

A - BEFORE STARTING THE PLATFORM

- Ensure that the intermediate rail is fully in the locked position before operating the platform from the basket.
- If the platform is new, see the paragraph : before starting the platform for the first time in Chapter : 1 - safety advice and instructions.
- Carry out daily maintenance (see chapter 3 - MAINTENANCE, A - DAILY pages).
- Before starting the platform, check the levels :

• IC PLATFORMS :
• IC engine oil
• Hydraulic reservoir oil
• Fuel
• Coolant

• ELECTRIC PLATFORMS :
• Hydraulic reservoir oil
• Battery charge level

- The lifting platform must be in transport position (with the arms completely folded back or the scissors in the low position) before you enter it.
- Make sure the horn works.
- Check before you use the lifting platform that the access door is properly locked.

B - DRIVER'S OPERATING INSTRUCTIONS

- Whatever his experience, the operator is advised to familiarize himself with the position and operation of all the controls and instruments before operating the platform.

Wear suitable clothing for driving the platform, do not wear baggy clothes.
- Make sure you have the appropriate protective equipment for the job to be done.
- Prolonged exposure to high noise levels may cause hearing problems. It is recommended to wear ear muffs to protect against excessive noise.
- Always pay attention when using the platform. Do not listen to the radio or music using headphones or earphones
- For increased comfort, adopt the correct position in the driver's cab.
- The operator must always be in his normal position in the driver's seat : extending arms or legs (or, in general, any part of the body), outside the basket is forbidden.
- Safety helmets must be worn.
- MANITOU recommends a safety harness in the operator's size be provided when the platform is in use (for the harness attachement in the basket , see chapter 2 - DESCRIPTION, CHECKING AND CONTROL INSTRUMENTS pages).
- The control units must never in any event be used for any other than their intended purposes (e.g. climbing onto or down from the platform, coat-rack, etc.).
- In the case of scissors-type platforms, it is forbidden to use the platform without the guardrails in place.
- Suspending a load under the basket or on any part of the lifting apparatus is strictly forbidden.
- The operator must not climb into or get down from the basket unless it is at ground level (with the lifting system folded).
- If the nacelle is equipped with a step, the basket must be situated directly below it before mounting or dismounting.
- The platform must not be fitted with any accessory increasing the machine's wind profile.
- Do not use a ladder or any improvised constructions in the basket to reach greater heights.
- Do not climb on the sides of the basket to reach greater heights.
- Never use the lifting platform with wet or greasy hands and shoes.

C - ENVIRONMENT

- Comply with site safety regulations.
- The platform can be manoeuvred from the ground: ensure that you forbid access.
- If you have to use the platform in a dark area or at night, make sure it is equipped with working lights.
- The platforms may not be used as cranes or elevators for the permanent transport of people or materials, nor as jacks or supports.
- When operating, ensure that there is no one or anything impeding the platform's progress ans operation.
- When raising the platform, ensure that no one or anything inpedes the platform's operation and do not perform any inappropriate manœuvres.

https://truckmanualshub.com/

- Do not allow anybody to come near the working area of the platform or pass beneath an elevated load. To do this, mark your operating area with warning signs.
- Travelling on a longitudinal slope :
  - Ensure that you adapt the platform's travelling speed by controlling the speed with the travelling manipulator.
- Take into account the platform's dimensions and its load before trying to negotiate a narrow or low passageway.
- Never move onto a loading platform without having first checked :
  - That it is suitably positioned and made fast.
  - That the unit to which it is connected (wagon, lorry, etc.) will not shift.
  - That this platform is prescribed for the size and the total weight of the platform.
  - That the slope is not greater than the platform's maximum authorised slope.
- Never move onto a foot bridge, floor or freight lift, without being certain that they are prescribed for the weight and size of the platform to be loaded and without having checked that they are in sound working order.
- Be careful in the area of loading bays, trenches, scaffolding, soft land and manholes.
- Ensure that the ground under the wheels and/or stabilisers is firm and stable before raising the basket.
- Do not attempt any operations outside the plarform's capabilities.
- Ensure that the materials on the platform (pipes, cables, containers, etc ...) cannot slip off and fall. Do not heap up these materials to the pint where you have to step over them.

If the basket must remain stationary over a structure for a long period, there is a risk that the basket will rest on this structure because of the oil cooling in the cylinders or a minor leak in the cylinder locking system. To eliminate this risk :
- Regularly check the distance between the basket and the structure and re-adjust if necessary.
- If possible use the platform at an oil temperature as close as possible to ambient temperature.

- In the case of work near aerial lines, ensure that the safety distance is sufficient between the working area of the platform and the aerial line.

You must consult your local electrical agency. You could be electrocuted or seriously injured if you operate or park the platform too close to power cables.

If the platform comes into contact with electric wires, press the Emergency Stop button. If you can, jump from the basket without simultaneously being in contact with the basket and the ground.
If not, call for help, wam people not to touch the basket and to switch off the power supply to the wires or have it switched off.

- It is forbidden to use the lifting platform close to electrical power lines; observe the safety distances.

NOMINAL VOLTAGE IN VOLTS	DISTANCE ABOVE THE GROUND OR THE FLOOR IN METRES
50 < U < 1000	2,30 M
1000 < U < 30000	2,50 M
30000 < U < 45000	2,60 M
45000 < U < 63000	2,80 M
63000 < U < 90000	3,00 M
90000 < U < 150000	3,40 M
150000 < U < 225000	4,00 M
225000 < U < 400000	5,30 M
400000 < U < 750000	7,90 M

https://truckmanualshub.com/

If the wind is in excess of 45Km/h, do not perform any movements liable to endanger the lifting platform's stability.

- To recognise this speed by eye, please refer to the empirical wind evaluation scale below:

BEAUFORT scale (wind speed at a height of 10m over flat terrain)						
Degree	Type of wind	Speed (knots)	Speed (km/h)	Speed (m/s)	Ground effects	Sea conditions
0	Calm	0 - 1	0 - 1	< 0,3	Smoke rises vertically.	The sea is like a mirror.
1	Very light breeze	1 - 3	1 - 5	0,3 - 1,5	The smoke drift indicates the wind direction.	Some wavelets, like fish scales, but no foam.
2	Light breeze	4 - 6	6 - 11	1,6 - 3,3	Wind felt on exposed skin, leaves rustle.	Small but noticeable wavelets.
3	Gentle breeze	7 - 10	12 - 19	3,4 - 5,4	Leaves and small twigs constantly moving.	Very small waves, crests beginning to break.
4	Moderate breeze	11 - 16	20 - 28	5,5 - 7,9	The wind raises dust and scraps of paper, it moves small branches.	Small waves stretching, many sheeps.
5	Fresh breeze	17 - 21	29 - 38	8 - 10,7	Small trees in leaf start to sway.	Wavelets form on stretches of water, moderate waves of some length.
6	Strong breeze	22 - 27	39 - 49	10,8 - 13,8	Large branches are moved, overhead wires whistle, umbrella use becomes difficult.	Waves form with white foam crests and airborne spray.
7	High wind	28 - 33	50 - 61	13,9 - 17,1	Whole trees are moving, effort required to walk against the wind.	The sea heaps up; some foam from breaking waves is blown into streaks in the wind direction.
8	Gale	34 - 40	62 - 74	17,2 - 20,7	The wind breaks off twigs, walking against the wind is very difficult.	Moderate height longer waves with breaking crests forming spindrift.
9	Strong gale	41 - 47	75 - 88	20,8 - 24,4	The wind damages roofs (chimneys, tiles, etc.).	Large waves, dense spindrift wrenched from the waves, airborne spray reducing visibility.
10	Storm	48 - 55	89 - 102	24,5 - 28,4	Rarely seen on land, trees uprooted, dwellings incur significant damage.	Very large waves, foam forming large amounts of airborne spray, reducing visibility.
11	Violent storm	56 - 63	103 - 117	28,5 - 32,6	Very rare, extensive damage.	Waves of exceptional height capable of sinking medium-sized ships, reduced visibility.
12	Hurricane	64 +	118 +	32,7 +	Disastrous damage.	Sea completely white, air full of spray and foam, severely reduced visibility.

https://truckmanualshub.com/

D - Visibility

- Maintain permanently good visibility throughout the route. To increase your visibility, you can move forwards with the pendular arm slightly raised (pay attention to the risk of falls in the basket from knocking into a low doorway, overhead electric wires, travelling cranes, highway bridges, tracks or any obstacle in the area in front of the platform). In reverse, look directly behind you. In any case, avoid reversing over long distances.
- If visibility of your road is inadequate, ask someone to help, standing outside the area in which the platform will be moving, and make sure you always have a good view of this person.

https://truckmanualshub.com/

PLATFORMS WITH IC ENGINES

SAFETY NOTICE

- Do not pull or push the lifting platform to start it. This type of manoeuvre would cause severe damage to the transmission. In cases of necessity, towing requires that the lifting platform be placed in freewheeling mode (See chapter 3 - MAINTENANCE).
- If using an emergency battery for start-up, use a battery with the same characteristics and respect battery polarity when connecting it. Connect at first the positive terminals before the negative terminals.

Failure to respect polarity between batteries can cause serious damage to the electrical circuit. The electrolyte in the battery may produce an explosive gas. Avoid flames and generation of sparks close to the batteries.
Never disconnect a battery while it is charging.

INSTRUCTIONS

- Check the closing and locking of the hood(s).
- Turn the ignition key to notch I to switch on the electrical power, which automatically starts the pre-heating system (all the bars must be displayed), the message "OK" is displayed.
- Check that everything is operating correctly by ensuring that no fault pages are displayed on the screen and no warning about the fuel level
  (a pump icon is present on the screen)
  (see chapter 2 - DESCRIPTION, CHECKING AND CONTROL INSTRUMENTS pages).
- To start, turn the ignition switch to position I.
- Press the starter button.
- Do not engage the starter motor for more than 15 seconds and carry out the preheating for 10 seconds between unsuccessful attempts.
- Check all control instruments when the I.C. engine is warm and at regular intervals during use, so as to quickly detect any faults and to be able to correct them without any delay.
- If any faults are displayed on the screen, stop the engine and immediately take the necessary measures.

ELECTRIC PLATFORMS

SAFETY NOTICÉ

- Do not use the platform if the battery is discharged to the point that movements are slowed down. In certain cases, the platform may stop (see chapter 3 - MAINTENANCE : EVERY DAY OR EVERY 10 HOURS FOR OPERATION pages, for the minimum permissible charge level).

INSTRUCTIONS

- Set the battery cut-out to the ON position.
- Check the closing and locking of the hood(s).
- Turn the ignition key to the basket position.
- Check that everything is operating correctly by ensuring that no error messages are displayed on the screen and that the machine maintenance light is not flashing (see chapter 2 - DESCRIPTION, CHECKING AND CONTROL INSTRUMENTS pages).

  NB: For machines not fitted with a display or a maintenance warning light, faults can be identified from the light directly on the variable speed drive unit (to access: open the cowl on the control size, remove the casing from the variable speed drive and see whether the light is flashing).

- If any error messages are constantly displayed or the machine maintenance light is flashing, return the key to the neutral position.
- Set the battery cut-off to the OFFposition.
- Immediately take the necessary measures.

https://truckmanualshub.com/

SAFETY NOTICE

Operators should be aware of the risks connected with using the platform, notably:
- Risk of losing control.
- Risk of losing lateral and frontal stability of the platform.

The operator must remain in control of the platform.

- Do not carry out operations which exceed the capacities of your platform.
- Familiarise yourself with the platform on the terrain where it will be used.
- Ensure that the brakes work efficiently when stopping a travelling movement, taking into account the braking distances.
- Drive smoothly at an appropriate speed for the operating conditions (land configuration, load in the basket).
- take extreme care if manoeuvring the platform with the basket in the high position. Ensure you have adequate visibility.
- Take bends slowly.
- In all circumstances make sure you are in control of your speed.
- Travel slowly on damp, slippery or uneven terrain or on truck ramps.
- Always remember that the hydraulic form of steering is very sensitive to movements.
- Never leave the I.C. engine on when the platform is unattended.
- Look where you are going and always make sure you have good visibility along the route.
- Drive round obstacles.
- Never drive on the edge of a ditch or steep slope.
- Whatever your travelling speed, you must reduce the speed as much as possible before stopping.
- The lifting platform must work in an obstacle-free area, where there is no danger descending to the ground.
- The operator using the lifting platform must be assisted by an appropriately instructed person on the ground.
- Comply with the limits shown on the lifting platform's load graph.

INSTRUCTIONS

- When moving the platform a long distance, always travel with the arms folded or the scissors in the low position.
- Engage the appropriate gear (see chapter 2 - DESCRIPTION, CHECKING AND CONTROL INSTRUMENTS pages).

https://truckmanualshub.com/

G - Stopping the platform

SAFETY NOTICE

- Never leave the ignition key in the platform during the operator's absence.
- Make sure that the platform is not stopped in any position that will interfere with the traffic flow and at less than one meter from the track of a railway.
- In the event of prolonged parking on a site, protect the platform from bad weather, particularly from frost (check the level of antifreeze), close and lock all the platform accesses (cowls…).
- Park the lifting platform on a flat surface or on a slight slope of less than 10%.

INSTRUCTIONS

PLATFORMS WITH IC ENGINES

- Before stopping the platform after a long working period, leave the I.C. engine idling for a few moments, to allow the coolant liquid and oil to lower the temperature of the I.C. engine and transmission.

Do not forget this precaution, in the event of frequent stops or warm stalling of the I.C. engine, or else the temperature of certain parts will rise significantly due to the stopping of the cooling system, with the risk of badly damaging such parts.

- Stop the I.C. engine with the ignition switch.
- Remove the ignition key.
- Check that all the accesses on the platform are closed and locked (cowls…).

ELECTRIC PLATFORMS

- Remove the ground/platform control selection key.
- Check that all the accesses on the platform are closed and locked (cowls…).
- Set the battery cut-out to the OFF position (ELECTRIC PLATFORM).

https://truckmanualshub.com/

INSTRUCTIONS FOR WELDING AND BLOW TORCH WORK ON THE EXTERNAL STRUCTURE

Ensure that there are no hydraulic or electrolyte leaks on the platform.

When welding, work in the opposite direction from the control console to avoid sparks damaging it .

- Any welding and cutting (blow torch) work from the basket on a building's metallic structures requires the following precautions to be taken:

A - WITH ELECTRIC WELDING EQUIPMENT

- It is essential that the machine has a discharge braid connecting the platform's chassis to the ground.
- It is also essential that the external structure to be welded is connected to the earth. If the above conditions are observed, the platform can, in this case, be in contact with the structure or the elements to be welded without damaging the electronic components.
- The power supply to the welding equipment must be via an earthed socked and any extension required just also be earthed.
- In all cases, ensure that there are no electrical arcs in the basket or on the platform (contact between the brazing rod or the torch and the welding equipment's earth). To ensure this, at any time the welding equipment's earth must not be positioned on the platform's basket but instead only as close as possible to the element to be welded.
- Switch off the welding equipment before disconnecting the earth clamp from the element or elements to be welded.

B - WITH A BLOW TORCH

- Attach the blow torch's bottles to the basket's handrails.
- instructions for welding and blow torch work on the external structure
- Do not set the blow torch down on the lip of the basket while it is still operating or point it towards the control console or its power cables.

https://truckmanualshub.com/

GENERAL INSTRUCTIONS

- Ensure the area is sufficiently ventilated before starting the platform.
- Wear clothes suitable for the maintenance of the platform, avoid wearing jewellery and loose clothes. Tie and protect your hair, if necessary.
- Stop the I.C. engine before conducting any work on the platform, remove the ignition key and disconnect the "Minus" battery terminal.
- Set the battery cut-out to the OFF position (ELECTRIC PLATFORM).
- Read the operator's manual carefully.
- Carry out all repairs immediately, even if the repairs concerned are minor.
- Repair all leaks immediately, even if the leak concerned is minor.
- Make sure that the disposal of process materials and of spare parts is carried out in total safety and in a ecological way.
- Be careful of the risk of burning and splashing (exhaust, radiator, I.C. engine, etc.).

MAINTENANCE

- Perform the periodic service (see : 3 - MAINTENANCE) to keep your platform in good working conditions. Failure to perform the periodic service may cancel the contractual guarantee.

MAINTENANCE LOG

- The maintenance work performed following the recommendations in Part 3 - MAINTENANCE and the other inspection, servicing, repair and modification work performed on the lifting platform must be recorded in a maintenance log. A note must be made, for each operation, of the date of the work, the names of the persons or companies that have performed them, the nature of the 'operation and, where applicable, the maintenance intervals. When components in the lifting platform have to be replaced, the components' references must be noted.

LUBRICANT AND FUEL LEVELS

- Use the recommended lubricants (never use contaminated lubricants).
- Do not fill the fuel tank when the I.C. engine is running.
- Only fill up the fuel tank in areas specified for this purpose.
- Do not fill the fuel tank to the maximum level.
- Do not smoke or approach the platform with a flame, when the fuel tank is open or is being filled.

LEVEL OF ELECTROLYTE IN THE BATTERY

- Check the level of the battery or batteries.

When doing this, ensure you take all the safety precautions (See : 3 - MAINTENANCE).

https://truckmanualshub.com/

HYDRAULIC

- Make any repairs and fix any leaks, including minor ones, immediately.
- Do not attempt to loosen unions, hoses or any hydraulic component with the circuit under pressure.

BALANCING VALVE : It is dangerous to change the setting and remove the balancing valves or safety valves which may be fitted to your platform cylinders. These operations must only be performed by approved personnel (consult your dealer).

Ensure that all consumables and replacement parts are disposed of safety, in an environmentally friendly manner.

The HYDRAULIC ACCUMULATORS that can be fitted on your lifting platform are pressurised components; removal of these components and their hoses can be a dangerous operation. It should only be performed by accredited personnel (please contact your dealer).

ELECTRICITY

- Do not drop metallic items on the battery (between the "Plus" and "Minus terminals").
- Disconnect the battery or batteries before working on the electrical circuit.
- The electrical box must only be opened by authorized personnel.

WELDING ON THE ACCESS PLATFORM

- Disconnect the battery or batteries before welding on the platform.
- When carrying out electric welding work on the platform, connect the negative cable from the equipment directly to the part being welded, so as to avoid high tension current passing through the alternator or the live ring.
- If the platform is equipped with an electronic control unit, disconnect this before starting to weld, to avoid the risk of causing irreparable damage to electronic components.

Welding operations on the structure for maintenance or repair operations must only be performed by MANITOU-certified personnel.

WASHING THE PLATFORM

- Clean the platform or at least the area concerned before any intervention.
- Remember to close and lock all accesses to the platform (cowls…).
- When cleaning with a pressure washer, avoid the articulation joints, and the electrical components and connections.
- If necessary, protect components likely to be damaged, and in particular the electrical components (variable speed drive, charger) and connections and the injection pump from penetration by water, steam or cleaning products.
- Dry the electrical components.
- Clean the platform of any fuel, oil or grease trace.
- Grease the shafts.

FOR ANY INTERVENTION OTHER THAN REGULAR MAINTENANCE,
CONSULT YOUR DEALER.

https://truckmanualshub.com/

IF THE PLATFORM IS NOT TO BE USED FOR A LONG TIME

INTRODUCTION

The following recommendations are intended to prevent the platform from being damaged when it is withdrawn from service for an extended period.
For these operations, we recommend the use of a MANITOU protective product, reference 603726.
Instructions for using the product are given on the packaging.

Procedures to follow if the platform is not to be used for a long time and for starting it up again afterwards must be performed by your dealership.

PREPARING THE PLATFORM

- Clean the platform thoroughly.
- Check and repair any leakage of fuel, oil, water or air.
- Replace or repair any worn or damaged parts.
- Wash the painted surfaces of the platform in clear and cold water and wipe them.
- Touch up the paintwork if necessary.
- Shut down the platform (see vacuous and in load DRIVING INSTRUCTIONS).
- Make sure the cylinder rods are all in retracted position.
- Release the pressure in the hydraulic circuits.

PROTECTING THE I.C. ENGINE

- Fill the tank with fuel (see : 3 - MAINTENANCE).
- Empty and replace the cooling liquid (see : 3 - MAINTENANCE).
- Leave the I.C. engine running at idling speed for a few minutes, then switch off.
- Replace the I.C. engine oil and oil filter (see : 3 - MAINTENANCE).
- Add the protective product to the engine oil.
- Run the I.C. engine for a short time so that the oil and cooling liquid circulate inside.
- Disconnect the battery and store it in a safe place away from the cold, after charging it to a maximum.
- Remove the injectors and spray the protective product into each cylinder for two seconds with the piston in low neutral position.
- Turn the crankshaft once slowly and refit the injectors (see I.C. engine REPAIR MANUAL).
- Remove the intake hose from the manifold or turbocharger and spray the protective product into the manifold or turbocharger.
- Cap the intake manifold hole with waterproof adhesive tape.
- Remove the exhaust pipe and spray the protective product into the exhaust manifold.
- Refit the exhaust pipe and block the outlet with waterproof adhesive tape.

NB : The spray time is noted on the product packaging.

- Open the filler plug, spray the protective product around the rocker arm shaft and refit the filler plug.
- Cap the fuel tank using waterproof adhesive tape.
- Remove the drive belts and store them in a safe place.
- Disconnect the engine cut-off solenoid on the injection pump and carefully insulate the connection.

https://truckmanualshub.com/

CHARGING THE BATTERIES

- In the case of electric platforms, in order to preserve the batteries'life and their capacity, check them periodically and keep the charge level constant (see : 3 - MAINTENANCE).

PROTECTING THE PLATFORM

- Protect cylinder rods which will not be retracted, from corrosion.
- Wrap the tyres.
  NB : If the platform is to be stored outdoors, cover it with a waterproof tarpaulin.

BRINGING THE PLATFORM BACK INTO SERVICE

- Remove the waterproof adhesive tape from all the holes.
- Refit the intake hose.
- Reconnect the engine cut-off solenoid.
- Refit and reconnect the battery.
- Remove the protection from the cylinder rods.
- Perform the daily service (see : 3 - MAINTENANCE
- Empty and replace the fuel and replace the fuel filter (see : 3 - MAINTENANCE).
- Refit and set the tension in the drive belts (see : 3 - MAINTENANCE).
- Turn the I.C. engine using the starter, to allow the oil pressure to rise.
- Lubricate the platform completely (see : 3 - MAINTENANCE, MAINTENANCE TABLE).

Make sure the area is adequately ventilated before starting up the platform.

- Start up the platform, following the safety instructions and regulations (see DRIVING INSTRUCTIONS).
- Carry out all the lifting system's hydraulic movements right up to the limit switches for each cilinder.

https://truckmanualshub.com/

SCRAPPING THE NACELLE

Before scrapping the nacelle, consult your dealer.

RECYCLING OF MATERIALS

METALS
- These are 100% recoverable and recyclable.

PLASTIC MATERIALS
- The plastic parts are marked, in accordance with the regulations in force.
- To facilitate the recycling process, the range of materials used has been limited.
- The majority of the plastic materials are made up of thermoplastics which are easily recyclable by melting, granulating or grinding.

RUBBERS
- The tyres and seals can be ground to be used in the manufacture of cement or to create reusable granules.

LENSES
- These can be removed and collected for processing by glass manufacturers.

ENVIRONMENTAL PROTECTION

- If you entrust the maintenance of your nacelle to the MANITOU network, the risk of pollution is limited and the contribution to the protection of the environment is respected.

WORN OR DAMAGED PARTS
- Do not discard parts into the environment.
- MANITOU and its network take an approach that protects the environment through recycling.

WASTE OIL
- The MANITOU ensures that it is collected and treated.
- By entrusting them with your oil changes, the risk of pollution is limited.

WASTE BATTERIES
- Do not throw away any batteries, they contain metals that are harmful to the environment.
- Bring them to the MANITOU network or any other approved collection point.

NOTE: MANITOU's objective is to manufacture nacelle with the best performance and limit polluting emissions.

https://truckmanualshub.com/

https://truckmanualshub.com/

SAFETY LABELS 78 SEC

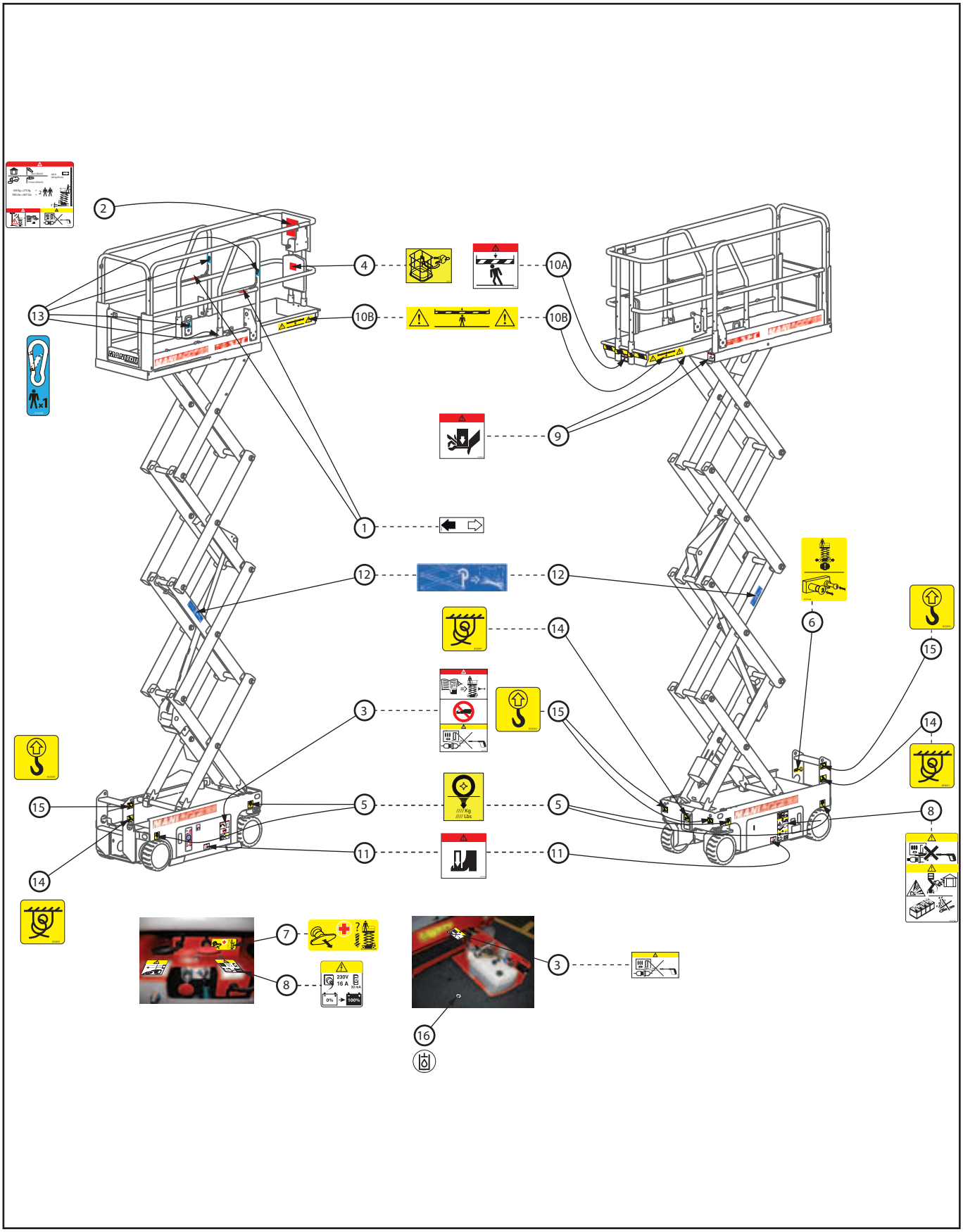

https://truckmanualshub.com/

SAFETY LABELS 100 SEC

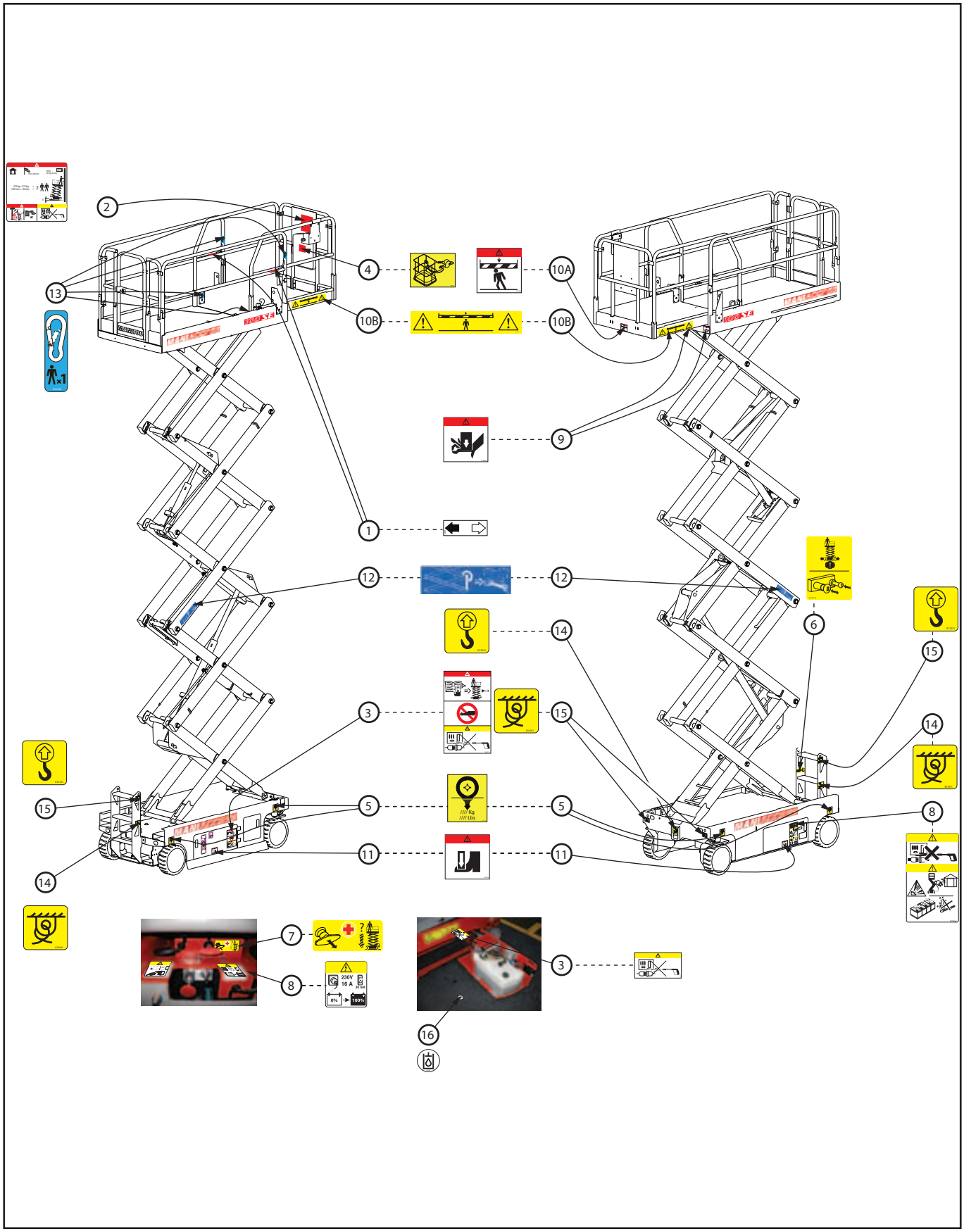

https://truckmanualshub.com/

SAFETY LABELS 120 SE

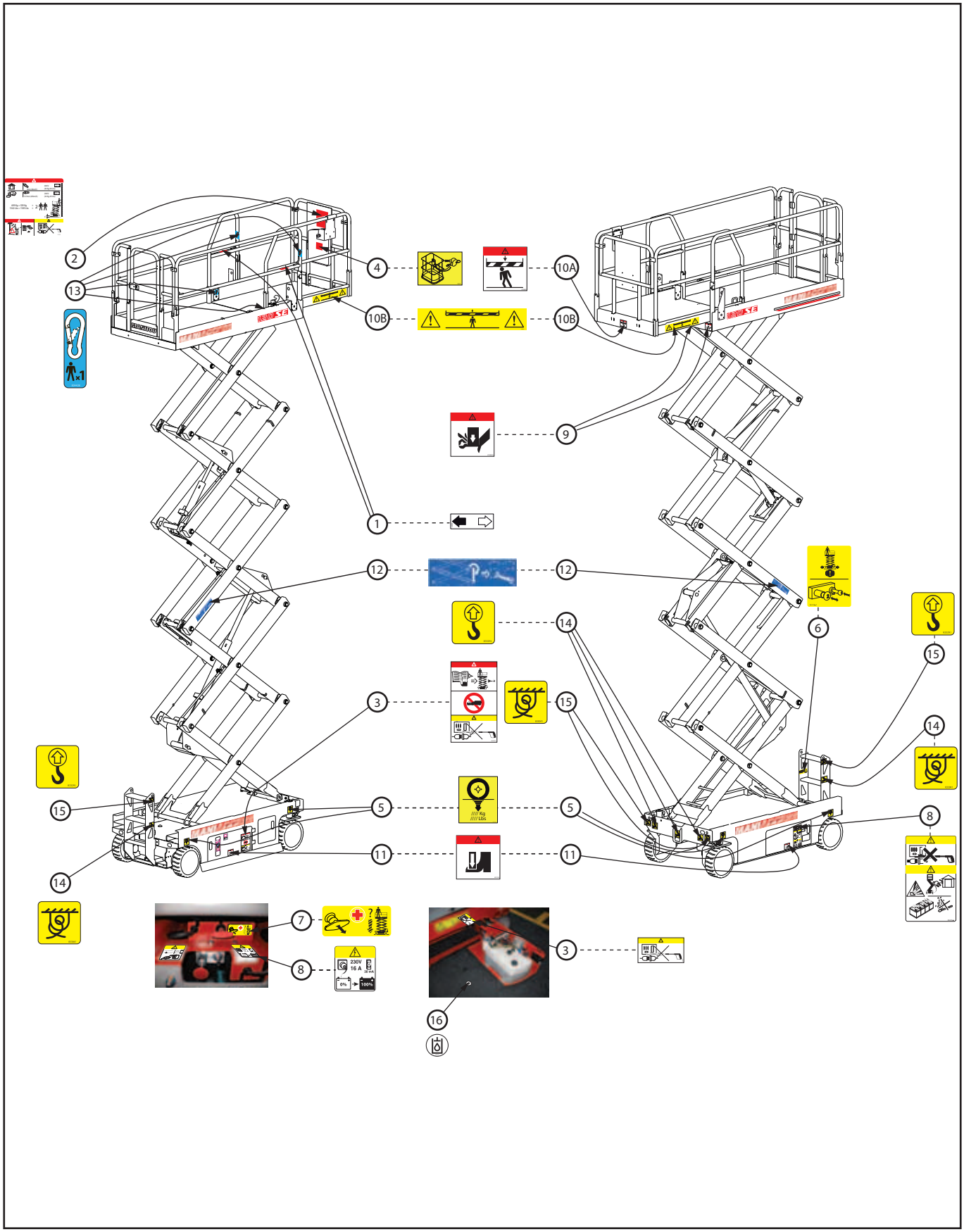

647369 (01/03/2017)
78/100 SEC 2 / 120 SE 2

https://truckmanualshub.com/

	78 SEC	100 SEC	120 SE	
1 - White and Black arrows	687 017	687 017	687 017	1-26
2 - Basket instructions ⟶⊣ 02/2017	834 097	834 363	834 099	1-26
2 - Basket instructions ⊢⟶ 03/2017	525 68 961	525 68 959	525 68 932	1-26
3 - Safety instructions	831 512	831 512	831 512	1-26
4 - Location of the platform key	598 897	598 897	598 897	1-26
5 - Wheel load	832 307	832 379	832 386	1-27
6 - Free-wheeling procedure	832 259	832 259	832 259	1-27
7 - Emergency descent	832 262	832 262	832 262	1-27
8 - Battery charging	832 260	832 260	832 260	1-28
9 - Risk of being crushed	676 988	676 988	676 988	1-28
10A - Danger, keep away	679 450	679 450	679 450	1-28
10B - Danger, keep away	597 657	597 657	597 657	1-29
11 - Danger of crushing your feet	831 516	831 516	831 516	1-29
12 - Maintenance stand	599 365	599 365	599 365	1-29
13 - Safety attachments	834 438	834 438	834 438	1-29
14 - Tie-down hook	833 291	833 291	833 291	1-30
15 - Lifting hook	833 041	833 041	833 041	1-30
16 - Hydraulic oil	597 652	597 652	597 652	1-30

https://truckmanualshub.com/

MEANINGS

1 - WHITE AND BLACK ARROWS

The White arrow indicates the translation direction when moving forward.
The Black arrow indicates the translation direction when reversing.

When the removable basket control box is inverted over the basket, the translation controls are inverted. Identify the forward direction by looking at the arrows on the basket and those on the basket control console.

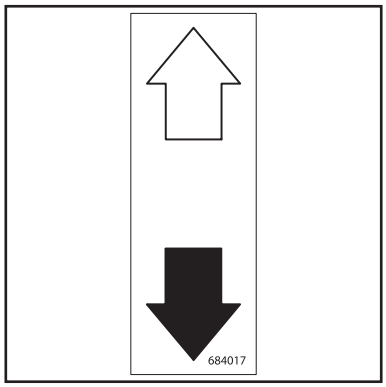

2 - BASKET INSTRUCTIONS

This describes several points:
- The platform's capacity in indoor and outdoor use.
- The risks of electric shocks.
- An invitation to check the instructions for more details on the safety instructions.
- A prohibition on using a high-pressure water jet on the control buttons and electrical components.
  NOTE: The capacities are individual to each platform; please refer to this sticker for your own machine.

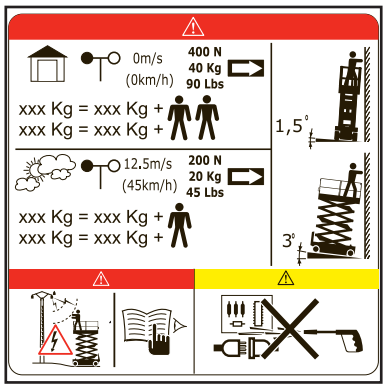

3 - SAFETY INSTRUCTIONS

1- Read and take note of the operating instructions and safety measures before starting the lifting platform.

2- This sticker states that the machine must not be towed if it breaks down.

3- It is strictly forbidden to use a pressure washer to clean the control knobs and the electrical components.

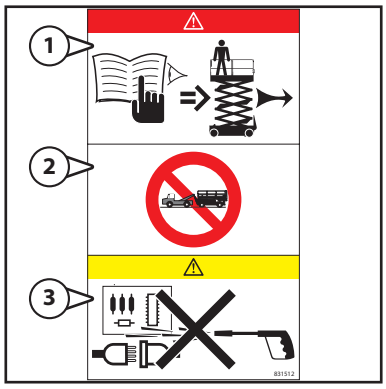

4 - LOCATION OF THE PLATFORM KEY

The duplicate platform keys (ignition, control selection, cover-opening keys...) are stored in this location specially provided.

To prevent unauthorised use of the lifting-platform, the customer have the responsibility to remove the duplicate keys from the files box of the basket on receipt of a new machine.

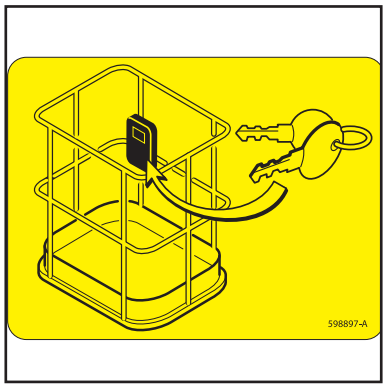

https://truckmanualshub.com/

5 - Wheel load

This shows the maximum load that a wheel may exert on the ground (see 2 - DESCRIPTION: CHARACTERISTICS for the break-through value).

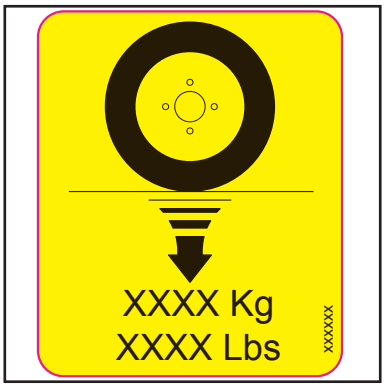

6 - Free-wheeling procedure

This describes the procedure for setting the machine in freewheeling mode when an accident or a breakdown causes the electrical control boxes to be rendered unusable. (see the description in CHAPTER 2).

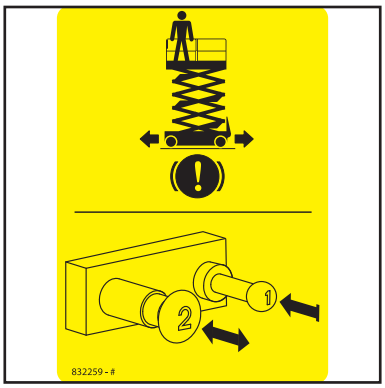

7 - Emergency descent

This describes the procedure for an emergency descent of the scissors using the manual control when an accident or breakdown has occurred.
(see the description in CHAPTER 2).

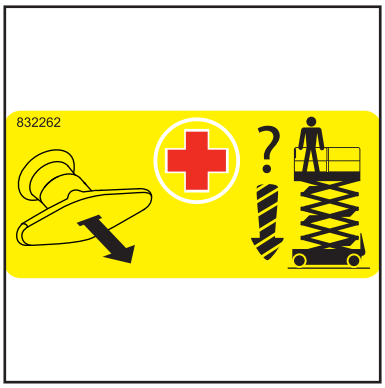

https://truckmanualshub.com/

8 - Battery charging

This describes the risks and the following recommendations:
- It is strictly forbidden to spray the jet from a pressure washer over the control buttons and the electrical components.
- There is a risk of explosion when the batteries are being charged.
- There is a risk of explosion during charging, caused by a spark, a naked flame or a short-circuit.
- This informs you that, to charge the batteries, you must connect the charger to a socket supplying a voltage of 230 Volts and an intensity of 16 Amps.
  The socket must be protected by a differential circuit breaker.

The batteries must be charged out of doors or in a well-ventilated area.
Do not smoke near the lifting platform while the batteries are being charged.

9 - Risk of being crushed

It is strictly forbidden to insert your fingers, or any other part of your body, in the lifting structure's component; there is a risk of being crushed.

10A - Danger, keep away

It is strictly forbidden to walk under or park under the structure (basket extension..) and in the lifting platform's operating area.

https://truckmanualshub.com/

10B - Danger, keep away

It is strictly forbidden to walk under or park under the structure (basket extension..) and in the lifting platform's operating area.

11 - Danger of crushing your feet

It is strictly forbidden to place your feet or any other part of the body in the components forming the stabiliser units; there is a risk of being crushed.

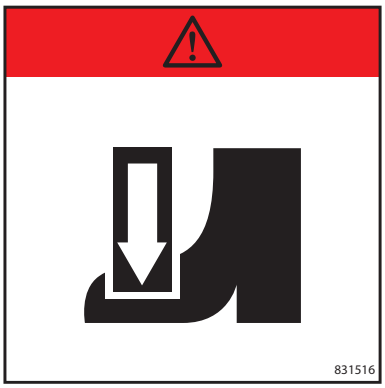

12 - Maintenance stand

This sticker tells you how to use a maintenance stand when working on the scissors when in operating position.

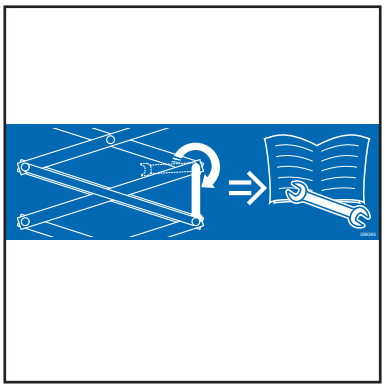

13 - Safety attachments

This sticker shows where the safety harness should be attached and the number of people that can use it.

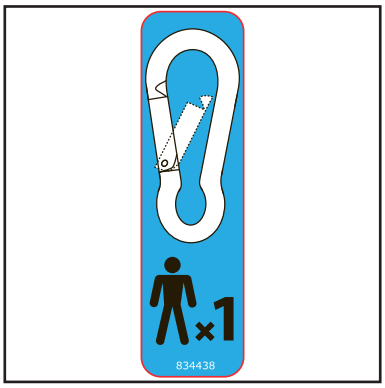

https://truckmanualshub.com/

14 - Tie-down hook

This sticker shows the location of the anchoring points for tying the platform on a lorry bed.
(see 3 – OCCASIONAL MAINTENANCE).

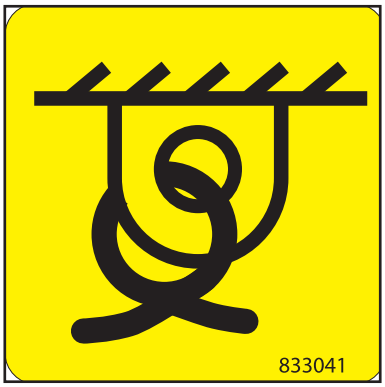

15 - Lifting hook

This sticker shows the hook-up points for moving the lifting platform with a crane.

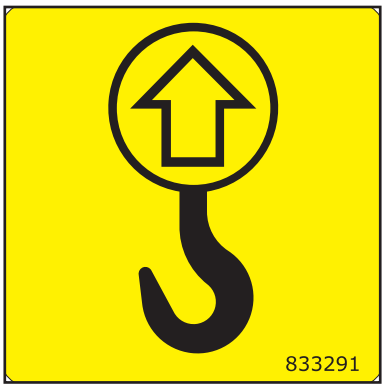

16 - Hydraulic oil

This indicates that this reservoir is designed only to hold hydraulic oil.

NB: see MAINTENANCE: LUBRICANTS

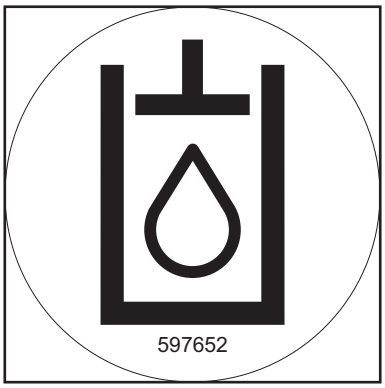

https://truckmanualshub.com/

2 - DESCRIPTION

https://truckmanualshub.com/

https://truckmanualshub.com/

CONTENTS

"EC" CONFORMITY DECLARATION - 78 SEC - 100 SEC - 120 SE	2-4
LIFTING PLATFORM ID	2-6
ELECTRICAL CHARACTERISTICS 78 SEC - 100 SEC - 120 SE	2-7
CHARACTERISTICS 78 SEC	2-8
CHARACTERISTICS 100 SEC	2-9
CHARACTERISTICS 120 SE	2-10
DIMENSIONS 78 SEC	2-12
DIAGRAM 78 SEC	2-13
DIMENSIONS 100 SEC	2-14
DIAGRAM 100 SEC	2-15
DIMENSIONS 120 SE	2-16
DIAGRAM 120 SE	2-17
LIFTING PLATFORM OPERATION	2-18
BASE CONTROL INSTRUMENTATION	2-20
BASKET CONTROL INSTRUMENTATION	2-22
LIFTING PLATFORM EQUIPMENT 78 SEC	2-24
LIFTING PLATFORM EQUIPMENT 100 SEC	2-26
LIFTING PLATFORM EQUIPMENT 120 SE	2-28
BASE CONTROL INSTRUMENTATION	2-30
BASKET CONTROL INSTRUMENTATION	2-32
LIFTING PLATFORM EQUIPMENT 100 SEC	2-35
USING THE LIFTING PLATFORM	2-36
RESCUE PROCEDURE	2-40

https://truckmanualshub.com/

DECLARATION "CE" DE CONFORMITE (originale)

"EC" DECLARATION OF CONFORMITY (original) (1)

(2) Constructeur, ***manufacturer*** : Manitou BF
(3) Adresse, ***Address*** : 430, RUE DE L'AUBINIERE - B.P 10249
44158 - ANCENIS - CEDEX - FRANCE
(4) Titulaire du dossier technique, ***Holder of the technical file*** : Manitou BF
(3) Adresse, ***Address*** : 430, RUE DE L'AUBINIERE - B.P 10249
44158 - ANCENIS - CEDEX - FRANCE
(5) Le constructeur déclare que la machine décrite ci-après, ***The manufacturer declares that the machine described below*** : **78 SEC - 100 SEC - 120 SE**

☐ (6) - Est conforme aux directives suivantes et à leurs transpositions en droit national (si applicables), ***Complies with the following directives and their transpositions into national law (if applicable)*** :

2006/42/CE

(7) - Pour les machines annexe IV, ***For annex IV machines*** :
(8) - Numéro d'attestation, ***Certificate number*** : CExx/xxxxx/PAC
(9) - Organisme notifié, ***Notified body*** : Powered Access Certification, Ltd.
P.O. Box 98, Windermere - CumbriaLA23 1WF, UK.

2000/14/CE + 2005/88/CE

(10) - Procédure appliquée, ***Applied procedure*** :
(9) - Organisme notifié, ***Notified body*** : SNCH - 11 ROUTE DU LUXEMBOURG
5201 SANDWEILER

(11) - Niveau de puissance acoustique, ***Sound power level*** :

(12) Mesuré, ***Measured*** : dB (A)

(13) Garanti, ***Guaranteed*** : dB (A)

2004/108/CE jusqu'au 19/04/2016 et 2014/30/UE à partir du 20/04/2016

☐ (14) - Normes harmonisées utilisées, ***Harmonised standards used*** :
EN12895

☐ (15) - Normes ou dispositions techniques utilisées, ***Standards or technical provisions used*** :

(16) - Fait à, ***Done at*** :
(17) - Date, ***Date*** :
(18) - Nom du signataire, ***Name of signatory*** :
(19) - Fonction, ***Function*** :
(20) - Société, ***Company*** :

(21) - Signature, ***Signature*** :

SPECIMEN

https://truckmanualshub.com/

bg : (2) Производител, (3) Адрес, (4) Притежател на техническото досие, (5) Производителят декларира, че описаната по-долу машина, (6) Е в съответствие със следните директиви и тяхното транспониране в националното законодателство (ако е приложимо), (7) Приложение IV относно машините, (8) Номер на сертификат, (9) Нотифициран орган, (10) Приложена процедура, (11) Ниво на силата на звука, (12) Измерено, (13) Гарантирано, (14) Използвани хармонизирани стандарти, (15) Използвани стандарти или технически разпоредби, (16) Изработено в, (17) Дата, (18) Име на подписаното лице, (19) Длъжност, (20) Фирма, (21) Подпис

cs : (2) Výrobce , (3) Adresa, (4) Držitel technické dokumentace, (5) Výrobce prohlašuje , že zařízení popsané níže, (6) Je v souladu s následujícími směrnicemi a směrnicemi transponovanými do vnitrostátního práva (je-li relevantní), (7) Pro stroje v příloze IV(8) Číslo certifikátu, (9) Notifikační orgán, (10) Použitý postup, (11) Úroveň hluku (12) Naměřená, (13) Zaručená, (14) Použité harmonizované normy , (15) Použité normy nebo technické předpisy(16) Místo (17) Datum (18) Jméno podepsaného, (19) Funkce, (20) Společnost, (21) Podpis

da : (2) Producent, (3) Adresse, (4) Indehaver af det tekniske dossier, (5) Producenten erklærer, at maskinen, der er beskrevet nedenfor, (6) overholder nedennævnte direktiver og disses gennemførelse til national ret (hvis det er relevant), (7) For maskiner under bilag IV, (8) Certifikat nummer, (9) Bemyndigede organ, (10) Anvendt procedure, (11) Lydeffektniveau, (12) Målt, (13) Garanti, (14) Anvendte harmoniserede standarder, (15) Standarder eller tekniske regler, (16) Udfærdiget i, (17) Dato, (18) Underskrivers navn, (19) Funktion, (20) Firma, (21) Underskrift.

de : (2) Hersteller, (3) Adresse, (4) Inhaber des technischen Dossiers, (5) Der Hersteller erklärt, dass die nachstehend beschriebene Maschine (6) den folgenden Richtlinien und deren Umsetzung in die nationale Gesetzgebung entspricht (falls anwendbar), (7) Für die Maschinen laut Anhang IV, (8) Bescheinigungsnummer, (9) Benannte Stelle, (10) Angewandtes Verfahren, (11) Schallleistungspegel, (12) Gemessen, (13) Gewährleistet, (14) angewandte harmonisierte Normen, (15) angewandte sonstige technische Normen und Bestimmungen, (16) Ausgestellt in, (17) Datum, (18) Name des Unterzeichners, (19) Funktion, (20) Gesellschaft, (21) Unterschrift.

el : (2) Κατασκευαστής, (3) Διεύθυνση, (4) Κάτοχος του τεχνικού φακέλου, (5) Ο κατασκευαστής δηλώνει ότι το μηχάνημα που περιγράφεται παρακάτω, (6) Συμμορφώνεται με τις εξής οδηγίες και τις προσαρμογές τους στο εθνικό δίκαιο (κατά περίπτωση), (7) Για τα μηχανήματα του παραρτήματος IV, (8) Αριθμός πιστοποιητικού, (9) Διακοινωμένος φορέας, (10) Εφαρμοζόμενη διαδικασία, (11) Στάθμη ηχητικής ισχύος, (12) Καταμετρημένη, (13) Εγγυημένη, (14) Εναρμονισμένα πρότυπα που χρησιμοποιούνται, (15) Πρότυπα ή τεχνικοί κανόνες που χρησιμοποιούνται, (16) Τόπος, (17) Ημερομηνία, (18) Όνομα του υπογράφοντος, (19) Ιδιότητα, (20) Εταιρεία, (21) Υπογραφή

es : (2) Fabricante, (3) Dirección, (4) Titular del expediente técnico, (5) El fabricante declara que la máquina que se describe a continuación, (6) Cumple con las siguientes directivas y sus transposiciones a la legislación nacional (en caso oportuno), (7) Para las máquinas anexo IV, (8) Número de certificación, (9) Organismo notificado, (10) Procedimiento aplicado, (11) Nivel de potencia acústica, (12) Medido, (13) Garantizado, (14) Normas armonizadas utilizadas, (15) Otras normas o especificaciones técnicas utilizadas, (16) Hecho en, (17) Fecha, (18) Nombre del signatario, (19) Cargo, (20) Empresa, (21) Firma.

et : (2) Tootja, (3) Aadress, (4) Tehnilise dokumentatsiooni valdaja, (5) Tootja kinnitab, et allpool kirjeldatud seade, (6) On vastavuses järgmiste direktiivide ja nende rigisisesesse õigusesse ülevõtmiseks vastuvõetud õigusaktidega (kui on kohaldatav), (7) IV lisas loetletud seadmete puhul, (8) Tunnistuse number, (9) Sertifitseerimisasutus, (10) Kohaldatav menetlus, (11) Akustilise võimsuse tase, (12) Mõõdetud, (13) Tagatud, (14) Vastab kehtivatele ühtlustatud standardite, (15) Vastab muudele kehtivatele standarditele ja tehnilistele normidele, (16) Väljaandmise koht, (17) Väljaandmise aeg, (18) Allkirjastaja nimi, (19) Amet, (20) Ettevõte, (21) Allkiri

fi : (2) Valmistaja, (3) Osoite, (4) Teknisten asiakirjojen haltija, (5) Valmistaja ilmoittaa, että alla kuvailtu laite, (6) Täyttää seuraavien direktiivien sekä niitä vastaavien kansallisten säännösten vaatimukset (tarvittaessa), (7) Liitteen IV laitteiden osalta, (8) Todistusnumero, (9) Ilmoitettu laitos, (10) Käytetty menettelytapa, (11) Äänen tehotaso, (12) Mitattu, (13) Taattu, (14) Käytetyt yhdenmukaistetut standardit, (15) Käytetyt tekniset standardit tai säännökset, (16) Paikka, (17) Aika, (18) Allekirjoittajan nimi, (19) Toimi, (20) Yritys, (21) Allekirjoitus.

ga : (2) Déantóir, (3) Seoladh, (4) Sealbhóir an chomhaid theicniúil, (5) Dearbhaíonn an déantóir go ndéanann an t-innealL ar a bhfuil cur síos thíos, (6) Cloíonn sé le na treoracha seo a leanas agus lena dtrasuí isteach i ndlí náisiúnta (más cuí), (7) Le haghaidh innill an aguisín IV, (8) Uimhir teastais, (9) Comhlacht a chugtar fógra dó, (10) Nós imeachta a cuireadh i bhfeidhm, (11) Leibhéal cumhachta na fuaime, (12) Tomhaste, (13) Ráthaithe, (14) Caighdeáin chomhchuibhithe a úsáideadh, (15) Caighdeáin nó forálacha teicniúla a úsáideadh, (16) Arna dhéanamh ag, (17) Dáta, (18) Ainm an tsínitheora, (19) Feidhmeannas, (20) Comhlacht (21) Síniú.

hr : , (2) Proizvođač, (3) Adresa (4) Nositelj tehničke dokumentacije, (5) Proizvođač izjavljuje da stroj opisan u nastavku, (6) Ispunjava sljedeće direktive i njihovom prijenosu u nacionalno zakonodavstvo (ako je primjenjivo), (7) Za dodatak IV o strojevima, (8) Broj certifikata, (9) Ovlašteno tijelo, (10) Primjenjeni postupak, (11) Razina snage zvuka, (12) Izmjereno, (13) Zajamčeno, (14) Primjenjeni standardi o harmonizaciji, (15) Primjenjeni standardi ili tehničke pričuve, (16) Urađeno u, (17) Datum, (18) Ime potpisnika, (19) Funkcija, (20) Tvrtka, (21) Potpis.

hu : (2) Gyártó, (3) Cím, (4) A műszaki dokumentáció birtokosa, (5) A gyártó kijelenti, hogy az alábbi termék, (6) Megfelel az alábbi irányelveknek valamint azok honosított előírásainak (ha vannak ilyenek), (7) A IV. melléklet gépeihez (adott esetben), (8) Bizonyítás szám, (9) Értesített szervezet, (10) Alkalmazott eljárás, (11) Akusztikus hang szint, (12) Mért, (13) Garantált, (14) felhasznált harmonizált szabványok, (15) egyéb felhasznált műszaki szabványok és előírások hivatkozással, (16) Kelt (hely), (17) Dátum, (18) Aláíró neve, (19) Funkció, (20) Vállalat, (21) Aláírás

is : (2) Framleiðandi, (3) Aðsetur, (4) Handhafi tæknigagna, (5) Framleiðandi staðfestir að vélin sem lýst er hér, (6) Samræmist eftirfarandi tilskipunum og staðfestu þeirra með hliðsjón af þjóðarétti (ef við á), (7) Fyrir tækjabúnað í IV. viðauka, (8) Númer vottorðs, (9) Tilkynnt til, (10) Aðferð beitt, (11) Hljóðstyrkur, (12) Mældist, (13) Ábyrgð, (14) Samhæfðir staðlar sem notaðir voru, (15) Aðrir staðlar eða tæknilegar forskriftir, (16) Staður, (17) Dagsetning, (18) Nafn undirritaðs, (19) Staða, (20) Fyrirtæki, (21) Undirskrift.

it : (2) Costruttore, (3) Indirizzo, (4) Titolare del fascicolo tecnico, (5) Il costruttore dichiara che la macchina descritta di seguito, (6) È conforme alle direttive seguenti e al relativo recepimento nella normativa nazionale (se applicabile), (7) Per le macchine Allegato IV, (8) Numero di Attestazione, (9) Organismo destinatario della notifica, (10) Procedura applicata, (11) Livello di potenza acustica, (12) Misurato, (13) Garantito, (14) Norme armonizzate applicate, (15) Norme e specifiche tecniche applicate, (16) Luogo, (17) Data, (18) Nome del firmatario, (19) Funzione, (20) Società, (21) Firma.

lt : (2) Gamintojas, (3) Adresas, (4) Techninės bylos turėtojas, (5) Gamintojas nurodo, kad mašina, aprašyta žemiau, (6) atitinka toliau nurodytas direktyvas ir jų nacionalinius teisės aktus perkeltas į nuostatas (jei taikytina), (7) IV priedas dėl mašinų, (8) Sertifikato Nr., (9) Notifikuotoji įstaiga, (10) Taikyta procedūra, (11) Garso stiprumo lygis, (12) Išmatuotas, (13) Garantuojamas, (14) Naudoti darniej standartai (15) Kiti naudoti standartai ir techninės specifikacijos, (16) Pasirašyta, (17) Data, (18) Pasirašiusio asmens vardas ir pavardė, (19) Pareigos, (20) Bendrovė, (21) Parašas

lv : (2) Ražotāja, (3) Adrese, (4) Tehniskās dokumentācijas turētāja, (5) Ražotāja apliecina, ka turpmāk aprakstītā mašīna, (6) Atbilst tālāk norādītajām direktīvām un to iekļaušanai nacionālajā likumdošanā (ja piemērojams), (7) IV pielikuma iekārtām, (8) Sertifikāta numurs, (9) Pilnvarota iestāde, (10) Piemērotā procedūra, (11) Skaņas jaudas līmenis, (12) Izmērīts, (13) Garantēts, (14) Piemērojamie saskaņotie standarti, (15) Piemērojamie tehniskie standarti un noteikumi, (16) Sastādīts, (17) Datums, (18) Parakstītāja vārds, (19) Amats, (20) Uzņēmums, (21) Paraksts

mt : (2) Manifattur, (3) Indirizz, (4) Detentur tal-fajl tekniku, (5) Il-manifattur jiddikjara li l-magna deskritta hawn taħt, (6) Hija konformi mja konformi mad-Direttivi segwenti u l-ħaġjiet li jimplementawhom fil-liġi nazzjonali (jekk applikabbli), (7) Ghall-magni fi-Anness IV, (8) Numru tać-certifikat, (9) Entità mnotifikata, (10) Proċedura applikata, (11) Livell ta' qawwa akustika, (12) Imkejjel, (13) Garantit, (14) l-istandards armonizzati użati, (15) standards tekniċi u speċifikazzjonijiet oħra użati, (16) Magħmul f', (17) Data, (18) Isem il-firmatarju, (19) Kariga, (20) Kumpanija (21) Firma.

nl : (2) Fabrikant, (3) Adres, (4) Houder van het technisch dossier, (5) De fabrikant verklaart dat de hieronder beschreven machine, (6) In overeenstemming is met de volgende richtlijnen en hun omzettingen in het nationale recht (indien van toepassing), (7) Voor de machines in bijlage IV, (8) Certificaatnummer, (9) Aangemelde instantie, (10) Toegepaste procedure, (11) Geluidsvermogensniveau, (12) Gemeten, (13) Gegarandeerd, (14) gehanteerde geharmoniseerde normen, (15) andere gehanteerde technische normen en specificaties, (16) Opgemaakt te, (17) Datum, (18) Naam van ondergetekende, (19) Functie, (20) Onderneming, (21) Handtekening.

no : (2) Produsent, (3) Adresse, (4) Innehaveren av den tekniske dokumentasjonen, (5) Produsenten slår at maskinen beskrevet nedenfor, (6) Oppfyller kravene i følgende direktiver og med nasjonale gjennomføringsbestemmelser (hvis aktuelt), (7) For maskinene i bilag IV, (8) Attestnummer, (9) Teknisk kontrollorgan, (10) Anvendt prosedyre, (11) Akustisk støy, (12) Målt, (13) Garantert, (14) harmoniserte standarder som brukes, (15) Andre standarder og spesifikasjoner som brukes, (16) Utstedt, (17) Dato, (18) Underlegnedes navn, (19) Stilling, (20) Firma (21) Underskrift

pl : (2) Producent, (3) Adres, (4) Posiadacz dokumentacji technicznej, (5) Producent oświadcza, że opisana poniżej maszyna, (6) Jest zgodna z następującymi dyrektywami i odpowiadającymi im przepisami prawa krajowego (jeśli dotyczy), (7) Dla maszyn załącznik IV, (8) Numer certyfikatu, (9) Jednostka certyfikująca, (10) Procedura stosowana, (11) Poziom mocy akustycznej, (12) Zmierzony, (13) Gwarantowany, (14) zastosowane normy zharmonizowane, (15) Zastosowane normy lub przepisy techniczne, (16) Sporządzono w, (17) Data, (18) Nazwisko podpisującego, (19) Stanowisko, (20) Firma (21) Podpis

pt : (2) Fabricante, (3) Morada, (4) Titular do processo técnico, (5) O fabricante afirma que a máquina descrita abaixo, (6) Está em conformidade com as seguintes diretivas e as suas transposições para o direito nacional (se for o caso), (7) Para as máquinas no anexo IV, (8) Número de certificado, (9) Entidade notificada, (10) Procedimento aplicado, (11) Nível de potência acústica, (12) Medida, (13) Garantida, (14) normas harmonizadas utilizadas, (15) outras normas e especificações técnicas utilizadas, (16) Elaborado em, (17) Data, (18) Nome do signatário, (19) Cargo, (20) Empresa, (21) Assinatura

ro : (2) Producător, (3) Adresa, (4) Titularul din dosarul tehnic, (5) Producătorul afirmă că aparatul descris mai jos, (6) Este conform cu directivele următoare și cu transpunerea lor în dreptul național (dacă este cazul), (7) Pentru mașinile din anexa IV, (8) Număr de atestare, (9) Organism notificat, (10) Procedura aplicată, (11) Nivel de putere acustică, (12) Măsurat, (13) Garantat, (14) standardele armonizate utilizate, (15) alte standarde și specificații tehnice utilizate, (16) Întocmit la, (17) Data, (18) Numele persoanei care semnează, (19) Funcția, (20) Firma, (21) Semnătura

sk :), (2) Výrobca, (3) Adresa, (4) Držiteľ technickej dokumentácie, (5) Výrobca vyhlasuje, že nižšie popísaný stroj, (6) Je v súlade s nasledujúcimi smernicami a smernicami transponovanými do vnútroštátneho práva (v prípade potreby), (7) Pre stroje v prílohe IV, (8) Číslo certifikátu, (9) Notifikovaný orgán, (10) Použitý postup, (11) Akustická úroveň hluku, (12) Nameraná, (13) Zaručená, (14) Použité harmonizované normy, (15) Iné použité normy a technické predpisy, (16) Miesto vydania, (17) Dátum vydania, (18) Meno podpísanej osoby, (19) Funkcia, (20) Spoločnosť, (21) Podpis

sl : (2) Proizvajalec, (3) Naslov, (4) Imetnik tehnične dokumentacije, (5) Proizvajalec izjavlja, da naprava, opisana v nadaljevanju, (6) Ustreza naslednjim direktivam in nacionalni zakonodaji (če ta velja), (7) Za stroje v skladu s prilogo IV, (8) Številka potrdila, (9) Priglašen organ, (10) Uporabljen postopek, (11) Raven akustične moči, (12) Izmerjena, (13) Zajamčena, (14) Uporabljeni usklajeni standardi, (15) Drugi uporabljeni tehnični standardi in specifikacije, (16) V, (17) Datum, (18) Ime podpisnika, (19) Funkcija, (20) Podjetje, (21) Podpis.

sv : (2) Tillverkare, (3) Adress. (4) Ägaren av det tekniska underlaget, (5) Tillverkaren försäkrar att den maskin som beskrivs nedan, (6) Överensstämmer med nedanstående direktiv och införlivandet av dem i nationell rätt (om tillämpligt), (7) För maskinerna i bilaga IV, (8) Nummer för godkännande, (9) Anmält organ, (10) Förfarande som tillämpats, (11) Ljudtrycksnivå, (12) Uppmätt, (13) Garanterad (14) Harmoniserade standarder som använts, (15) andra tekniska standarder och specifikationer som använts, (16) Upprättat i, (17) Datum, (18) Namn på den som undertecknat, (19) Befattning, (20) Företag (21) Namnteckning

647369 (01/03/2017)
78/100 SEC 2 / 120 SE 2

https://truckmanualshub.com/

LIFTING PLATFORM ID

LIFTING PLATFORM'S MANUFACTURER'S PLATE (FIG.A)

- Type :
- Serial No.:
- Year of manufacture:

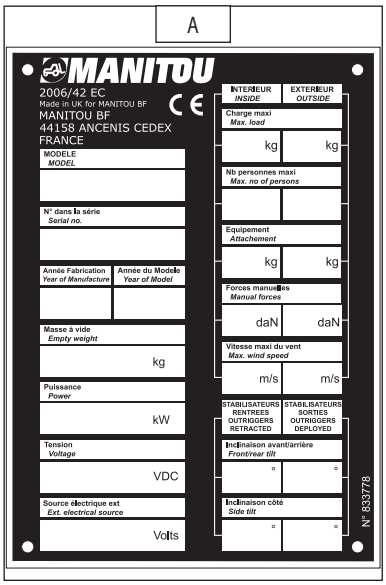

LOCATION OF THE MANUFACTURER'S PLATE (FIG. B)

The manufacturer's plate is located in the front of the chassis beside the base control console.

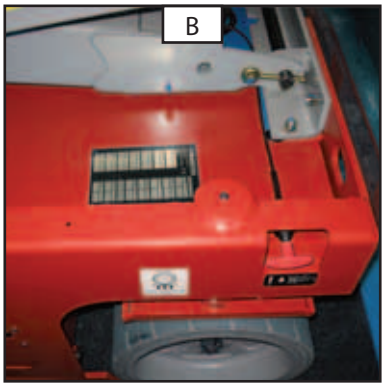

https://truckmanualshub.com/

ELECTRIC PUMP

- Supply	24V
- Flow	15 L / min at 172 bar
- Cubic capacity	4 cc
- Maximum pressure	255 bar

ELECTRICAL CIRCUIT

- Battery	6 Volts x 4 - 225 AH
- Charger	24 Volts DC - 19 A - 600 Watt

https://truckmanualshub.com/

SPECIFICATIONS

- Use	Indoor and outdoor
- Maximum capacity with capacity indicator	227 Kg **(1)**
	113 Kg **(2)**
	114 Kg **(3)**
- Number of people in the basket in indoor use	2 **(1)**
	1 **(2)**
	1 **(3)**
- Number of people in the basket in outdoor use	1 **(1)**
	1 **(2) (3)**
- Number of steered wheels: Front / Rear	2 / 0
- Number of drive wheels: Front / Rear	2 / 0
- Operating speed	0,8 Km/h
- Transport speed	4 Km/h
- Working height (in working position)	7,6 m
- Floor height (in working position)	5,8 m
- Mass of the lifting platform	
Unladen	1503 Kg
Under maximum nominal load	1730 Kg
- Number of gears	2
- Traversable slope (maximum load)	25 % - 14°
- Ground clearance (transport position)	6,1 cm
- Ground clearance (working position)	1,9 cm
- Max permissible wind speed	12,5 m/s
- Maximum authorised tilt (longitudinal)	3° - 5%
- Maximum authorised tilt (lateral)	1,5°
- Maximum permissible manual horizontal force indoors	400 N
- Maximum permissible manual horizontal force outdoors	200 N
- Sound level at ground controls level	< 70 dBa
- Sound level at Lifting Platform controls level	< 70 dBa

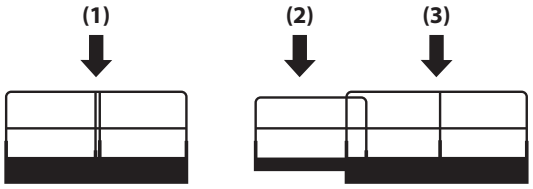

TYRES FRONT & REAR

- Dimensions	30 x 11 x 20 cm
- Pressure	Foam
- Under maximum load on 1 wheel (front / rear)	600 Kg - 1323 Lbs
- Tyre contact pressure	10,35 Kg/cm^2 - 1014 kPa
- Pressure on ground	1313 Kg/m^2 - 12,88 kPa

LEVEL OF VIBRATIONS

- The vibrations received by the arm/hand and the complete body do not exceed	2,5 m/s^2
- Quadratic average values for the body	< 0,5 m/s^2

https://truckmanualshub.com/

SPECIFICATIONS

- Use	Indoor
- Maximum capacity with capacity indicator	227 Kg **(1)**
	113 Kg **(2)**
	114 Kg **(3)**
- Number of people in the basket in indoor use	2 **(1)**
	1 **(2)**
	1 **(3)**
- Number of people in the basket in outdoor use	0 **(1) (2) (3)**
- Number of steered wheels: Front / Rear	2 / 0
- Number of drive wheels: Front / Rear	2 / 0
- Operating speed	0,8 Km/h
- Transport speed	3,5 Km/h
- Working height (in working position)	9,8 m
- Floor height (in working position)	7,92 m
- Mass of the lifting platform	
Unladen	1959 Kg
Under maximum nominal load	2186 Kg
- Number of gears	2
- Traversable slope (maximum load)	25 % - 14°
- Ground clearance (transport position)	8,9 cm
- Ground clearance (working position)	2,2 cm
- Max permissible wind speed	0 m/s
- Maximum authorised tilt (longitudinal)	3° - 5%
- Maximum authorised tilt (lateral)	1,5°
- Maximum permissible manual horizontal force indoors	400 N
- Maximum permissible manual horizontal force outdoors	0
- Sound level at ground controls level	< 70 dBa
- Sound level at Lifting Platform controls level	< 70 dBa

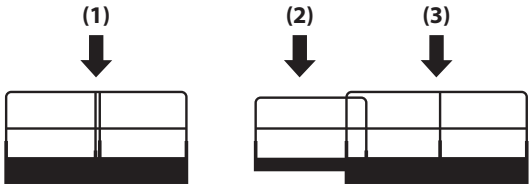

TYRES FRONT & REAR

- Dimensions	38 x 13 x 28 cm
- Pressure	Foam
- Under maximum load on 1 wheel (front / rear)	830 Kg - 1830 Lbs
- Tyre contact pressure	12,87 Kg/cm^2 - 1262 kPa
- Pressure on ground	1187 Kg/m^2 - 11,65 kPa

LEVEL OF VIBRATIONS

- The vibrations received by the arm/hand and the complete body do not exceed	2,5 m/s^2
- Quadratic average values for the body	< 0,5 m/s^2

https://truckmanualshub.com/

SPECIFICATIONS

- Use	Indoor and outdoor
- Maximum capacity with capacity indicator	318 Kg **(1)**
	113 Kg **(2)**
	205 Kg **(3)**
- Number of people in the basket in indoor use	2 **(1)**
	1 **(2)**
	1 **(3)**
- Number of people in the basket in outdoor use	1 **(1)**
	1 **(2) (3)**
- Number of steered wheels: Front / Rear	2 / 0
- Number of drive wheels: Front / Rear	2 / 0
- Operating speed	0,8 Km/h
- Transport speed	3,5 Km/h
- Working height (in working position)	11,75 m
- Floor height (in working position)	9,75 m
- Mass of the lifting platform	
Unladen	2781 Kg
Under maximum nominal load	3099 Kg
- Number of gears	2
- Traversable slope (maximum load)	25 % - 14°
- Ground clearance (transport position)	10,2 cm
- Ground clearance (working position)	1,9 cm
- Max permissible wind speed	12,5 m/s
- Maximum authorised tilt (longitudinal)	3° - 5%
- Maximum authorised tilt (lateral)	1,5°
- Maximum permissible manual horizontal force indoors	400 N
- Maximum permissible manual horizontal force outdoors	200 N
- Sound level at ground controls level	< 70 dBa
- Sound level at Lifting Platform controls level	< 70 dBa

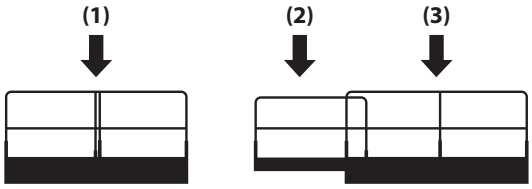

TYRES FRONT & REAR

- Dimensions	38 x 13 x 28 cm
- Pressure	Foam
- Under maximum load on 1 wheel (front / rear)	1183 Kg - 2608 Lbs
- Tyre contact pressure	18,36 Kg/cm^2 - 1799 kPa
- Pressure on ground	1198 Kg/m^2 - 11,75 kPa

LEVEL OF VIBRATIONS

- The vibrations received by the arm/hand and the complete body do not exceed	2,5 m/s^2
- Quadratic average values for the body	< 0,5 m/s^2

https://truckmanualshub.com/

https://truckmanualshub.com/

DIMENSIONS 78 SEC

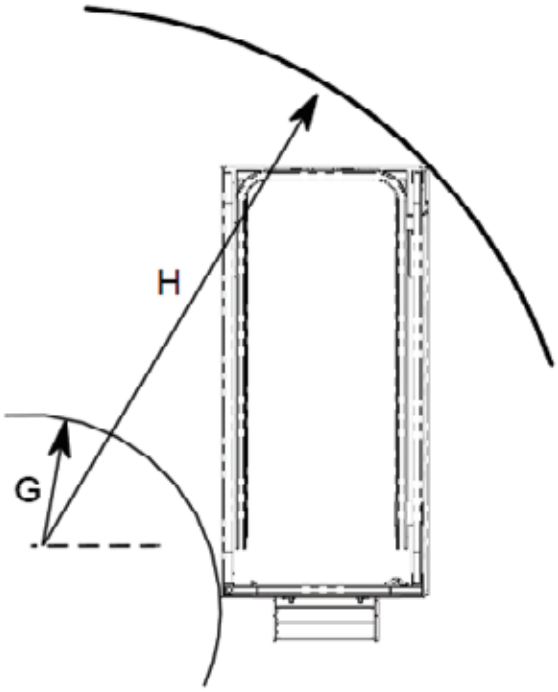

	78SEC
A	1830 mm
B	1320 mm
C	1640 mm
C_1	890 mm
D	810 mm
E	750 mm
F	2100 mm
F_1	1000 mm
G	0 mm
H	1550 mm

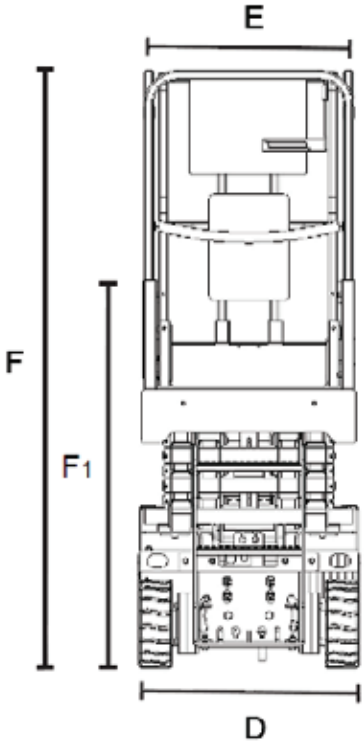

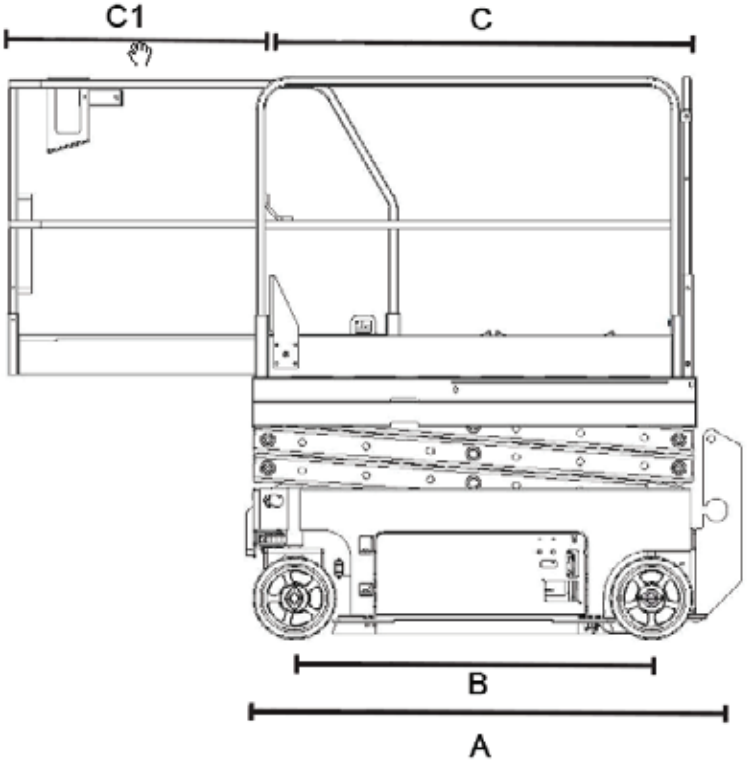

https://truckmanualshub.com/

DIAGRAM 78 SEC

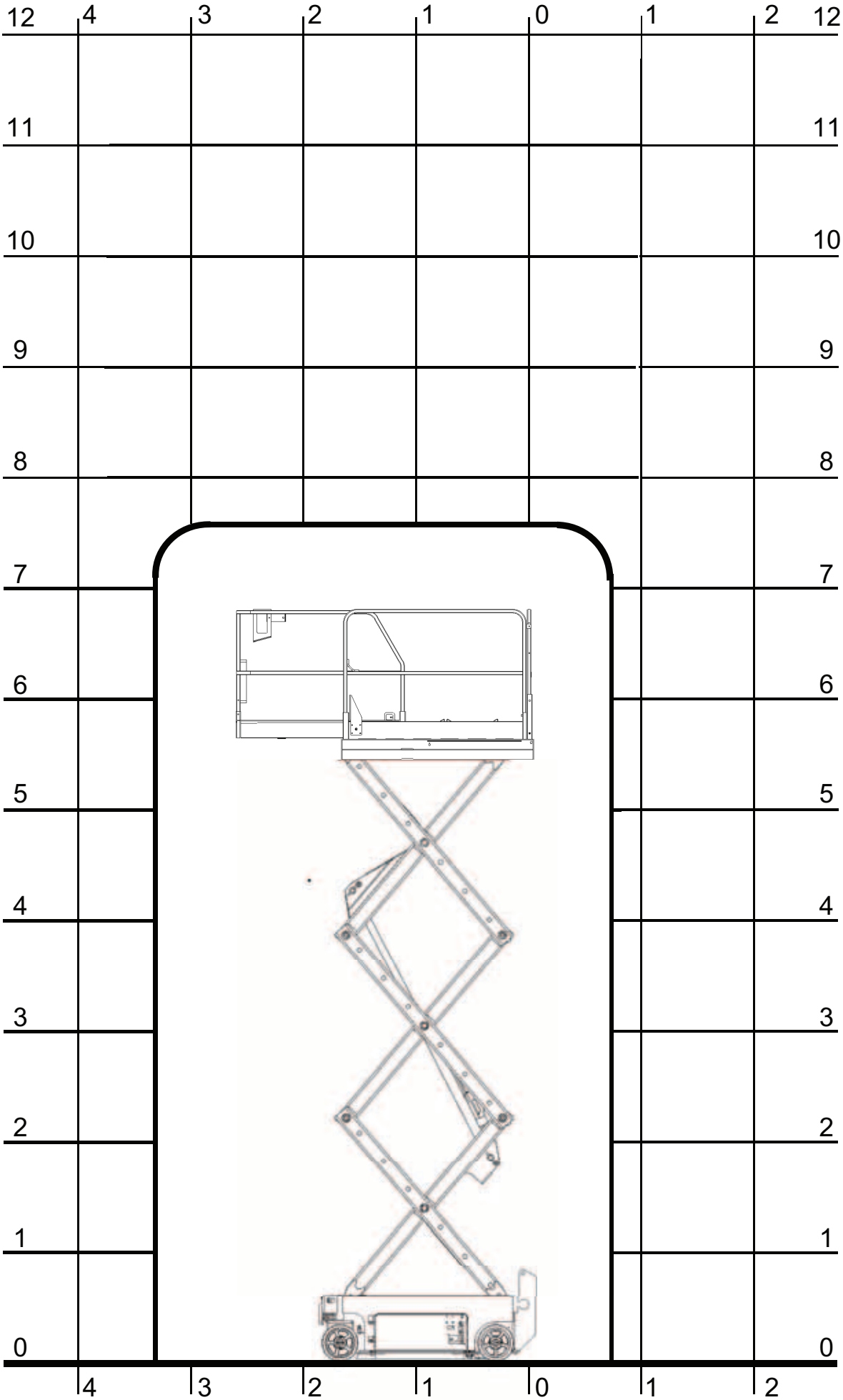

https://truckmanualshub.com/

DIMENSIONS 100 SEC

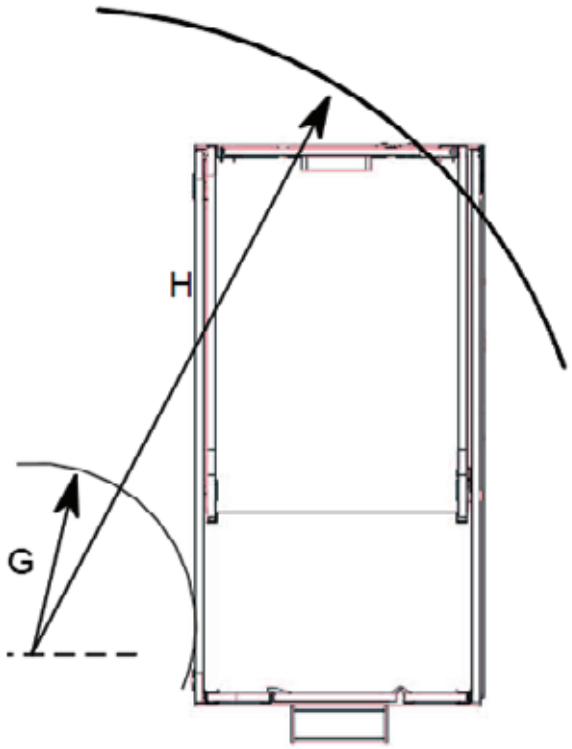

	100 SEC
A	2440 mm
B	1850 mm
C	2260 mm
C_1	890 mm
D	810 mm
E	810 mm
F	2250 mm
F_1	1160 mm
G	0 mm
H	2120 mm

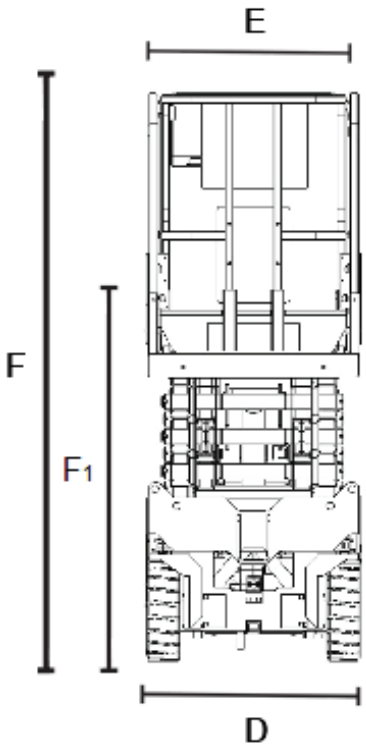

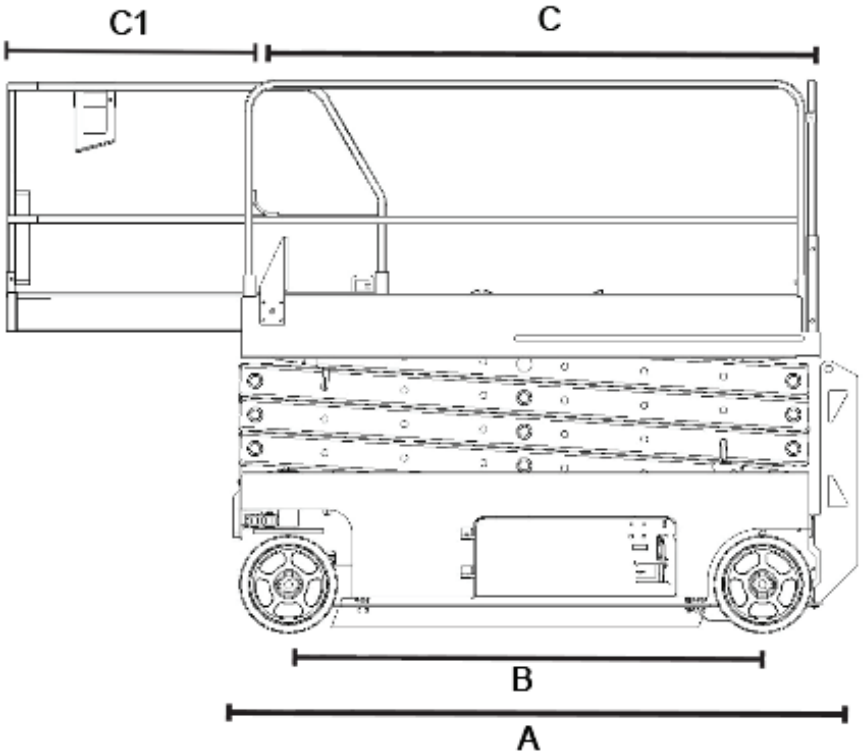

https://truckmanualshub.com/

DIAGRAM 100 SEC

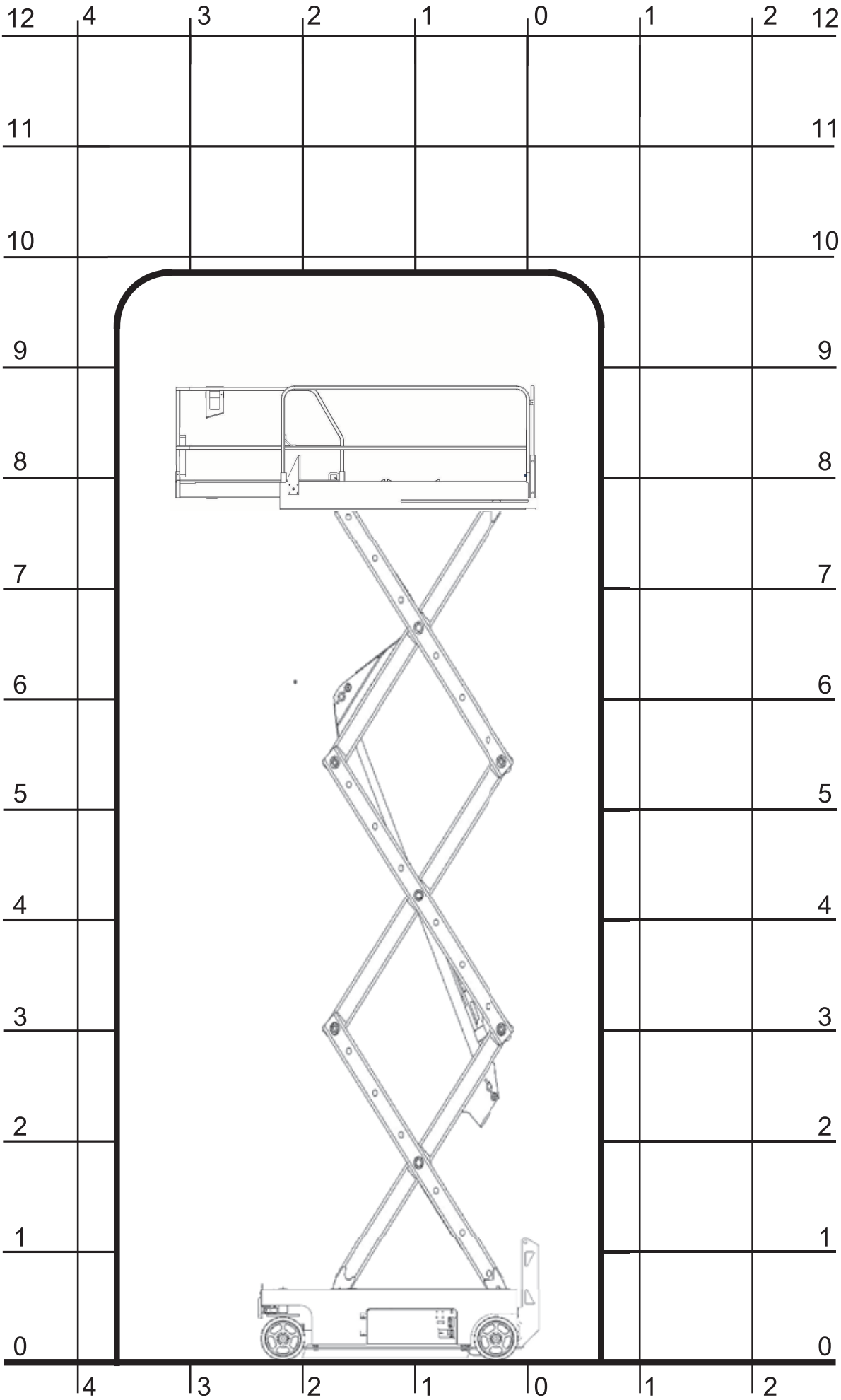

https://truckmanualshub.com/

DIMENSIONS 120 SE

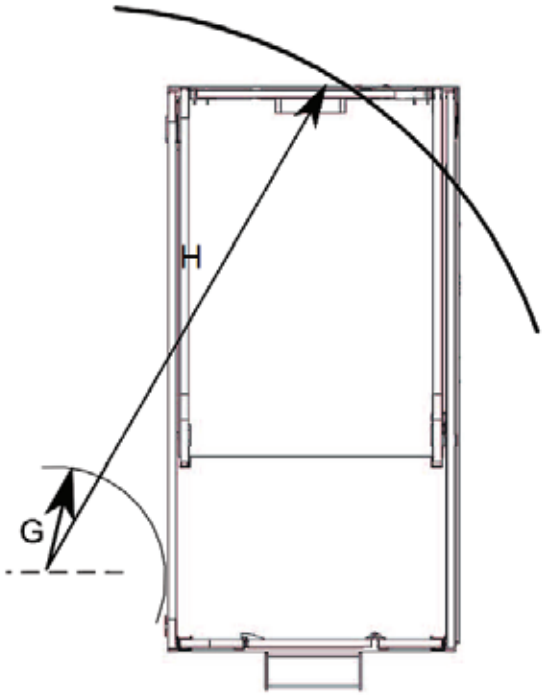

	120 SE
A	2440 mm
B	1850 mm
C	2260mm
C_1	890 mm
D	1160 mm
E	1160 mm
F	2380 mm
F_1	1810 mm
G	0 mm
H	2290 mm

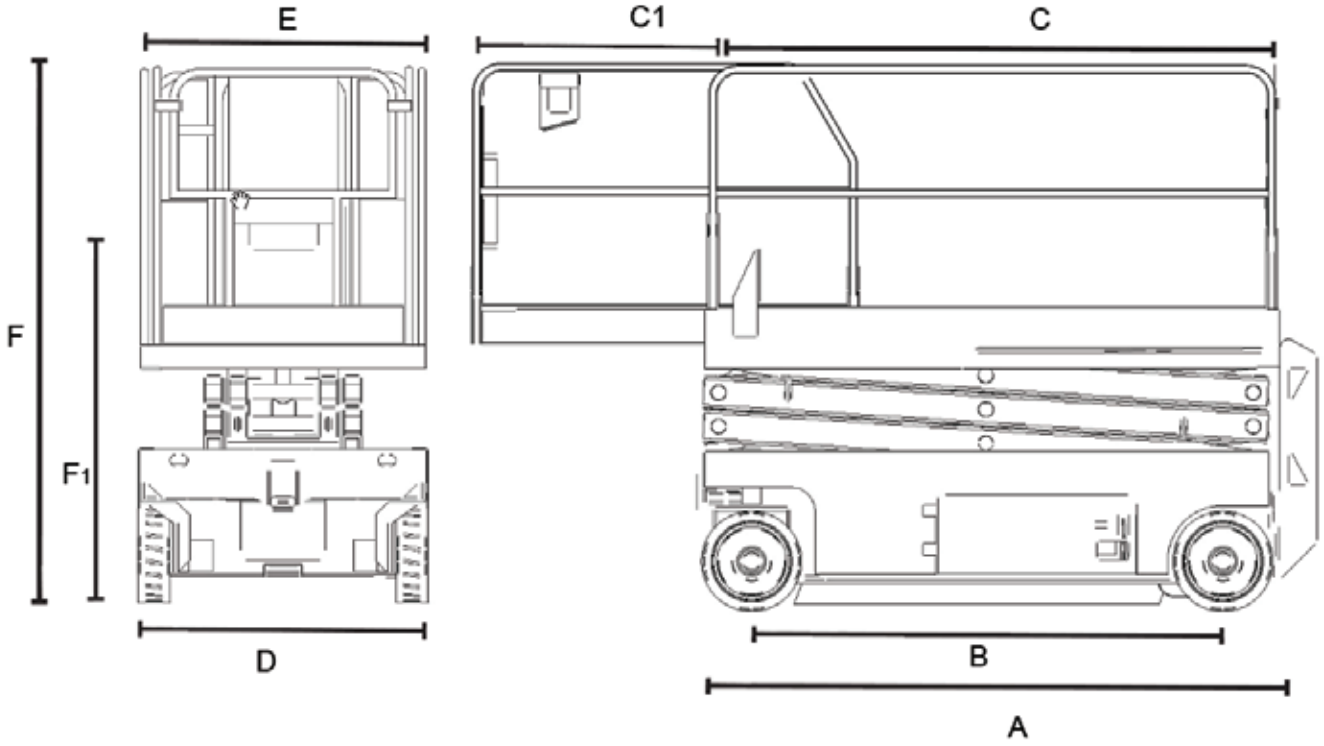

https://truckmanualshub.com/

DIAGRAM 120 SE

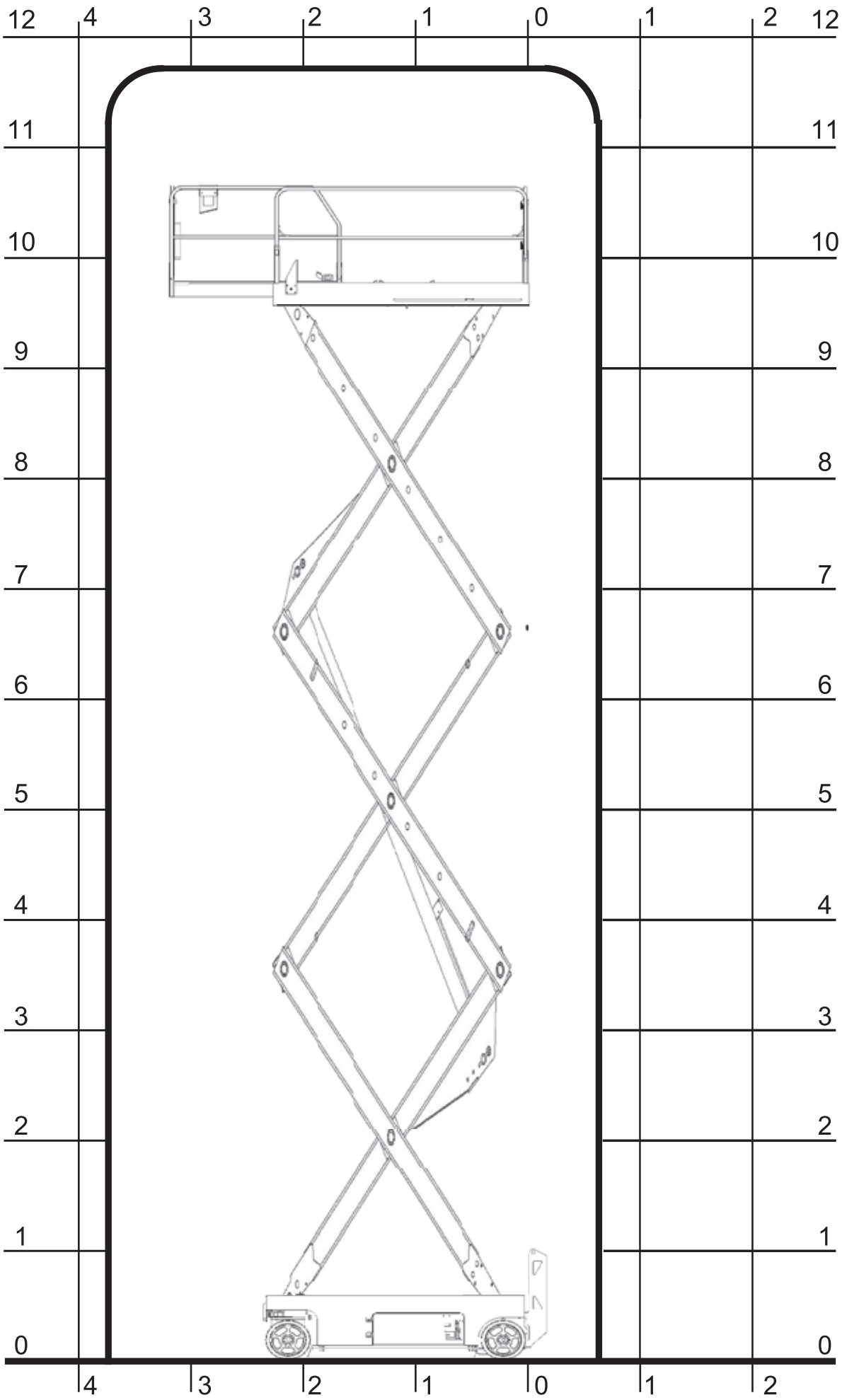

https://truckmanualshub.com/

DESCRIPTION

This machine is a mobile people lifting platform. It comprises a working platform fixed on the end of a scissors assembly.

- MANITOU lifting platforms are solely intended for taking people, with their tools and supplies (up to the authorised weight limit, see the "SPECIFICATIONS" paragraph), to a desired working height, to reach hard-to-reach places above installations and buildings.

The lifting platform is fitted with a control station in the basket, from which the operator can drive and move the machine forwards and backwards. The operator can raise or lower the scissor assembly.

The lifting platform is also fitted with an emergency ground control that can be used to lower the scissors. The emergency control must only be used in the event of an emergency to bring the operator back to the ground if he is incapable of doing so himself.

The operator must check, every day, that the emergency control and the basket are operating correctly.

Stickers showing the characteristics, safety warnings and the rescue procedure are affixed to the machine. The operator must read these and fully understand their content. To avoid any risk of wrongly interpreting the pictograms, please refer to the paragraph "SAFETY STICKERS" Section 1 – SAFETY INSTRUCTIONS AND ADVICE.

- The lifting platform is manoeuvred by means of a hydraulic pump. The hydraulic components are controlled by electro-valves actuated by means of contactors and the control joystick.

- The controls on the base console or the basket console, operating via contactors, are either in ON or OFF mode.

- The basket console is fitted with a so-called "Dead Man's" push-button on the joystick. This must be pressed at the same time as a movement command. Releasing the button stops the movement.

- The lifting platform is a machine with two drive wheels, driven by hydraulic motors located at the front of the platform. The undriven wheels, located at the rear, are provided with hydraulic release spring brakes. These brakes tighten automatically as soon as the translation joystick is returned to the Neutral position.

- The lifting platform can be raised to the limit of its capacities (see "CHARACTERISTICS" pages 2-7 to 2-10). A load not exceeding the basket's maximum capacity will enable you to move to any position, provided that the machine is on a surface with a slope that does not exceed the maximum authorised tilt.

GENERAL

- On the following pages, you will find all the information you require for using the machine. This included the procedures for using, driving, parking, loading and transporting the lifting platform.

https://truckmanualshub.com/

TILT

When the lifting platform reaches the maximum authorised level of tilt (see the CHARACTERISTICS chapter, pages 2-12 to 2-16), the diagnostics display 14* (Fig. A) on the basket console shows "LL". The lifting controls alarm should also sound intermittently.
Any "AGGRAVATING" lifting movements are forbidden, as a safety measure.

To resume control, simply perform movements that do not aggravate the situation:

- Reposition the platform on a more horizontal surface so that you can make lifting and extension movements.

OVERLOAD

When the lifting platform reaches the maximum authorised weight in the basket (see the CHARACTERISTICS chapter, pages 2-8 to 2-10), the diagnosis display 14* (Fig. B) on the basket console shows "OL" intermittently.
No function works. An alarm should sound.

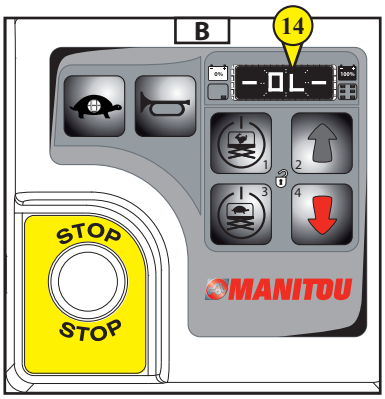

To resume control:
- Relieve the weight in the basket by removing the item or items causing the overload,
- Push in and then pull out the red Emergency Stop knob to re-initialise the system.
- If the lifting platform is still overloaded, the indicator light will continue to flash.
OR,
- Ask someone on the ground to perform a manual basket descent (see the end of the "Rescue Procedure" in the chapter and "Safety Stickers" in Chapter 1 "Safety instructions and advice").

* : The above numbers also correspond to those used in the description of these components on the following pages.

OVERLOAD RECOVERY

If the ground controls LCD diagnostic readout displays Overload Recovery, the emergency lowering system has been used while the platform was overloaded. For information on how to reset this message, please consult the appropriate Genie Service Manual.

DRIVING OVER A SLOPE

Take note of the permissible longitudinal and lateral inclinations for the machine and determine the percentage of slope.

Do not drive the machine over a slope whose angle is greater than the permissible longitudinal and lateral inclinations for the machine. The permissible inclination applies to machines in the folded position.

78 SEC - 100 SEC - 120 SE

Max permissible longitudinal inclination, in folded position 25% (14°)

Max permissible lateral inclination, in folded position 25% (14°)

Remark: the permissible inclination is subject to the condition of the ground and appropriate traction.

https://truckmanualshub.com/

A - GROUND MAINTENANCE AND EMERGENCY STATION

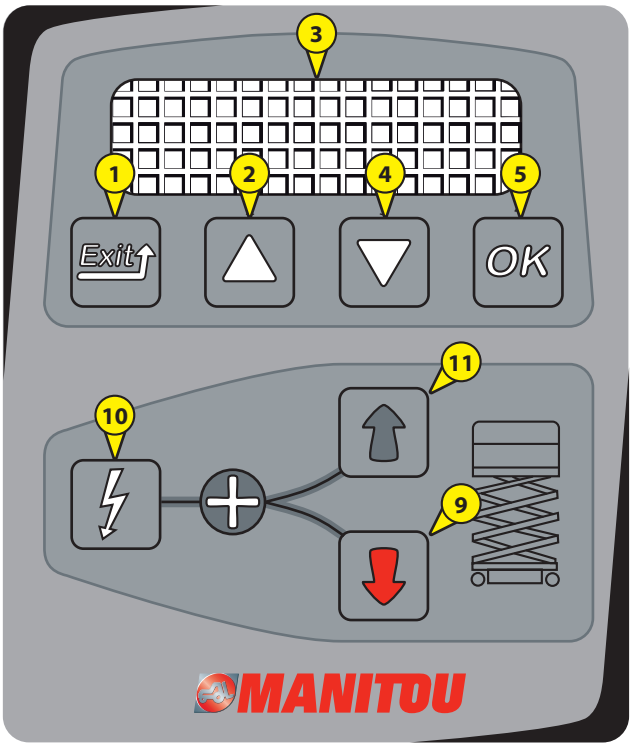

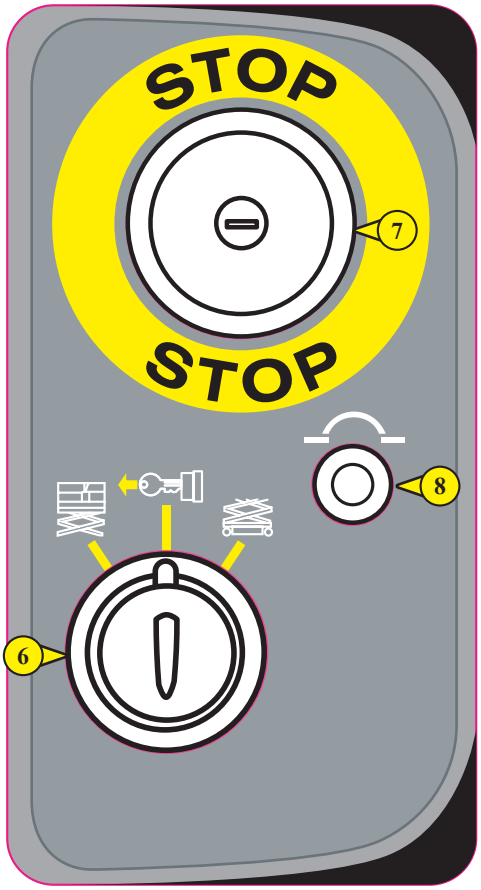

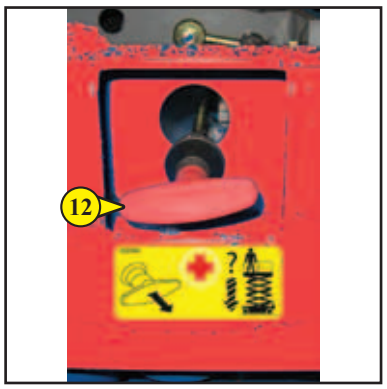

https://truckmanualshub.com/

1- Menu exit key

2- Menu scroll up key

3- Liquid crystal diagnostics screen

4- Menu scroll down key

5- Menu entry key

6- 3-position key-operated switch (lifting platform/stop/ground)

7- Red Emergency Stop knob

8- 7 A breaker for the electrical circuits

9- Lifting platform lowering button

10- Dead Man's button

Hold down and do not release this button to activate the raising and lowering functions.

11- Lifting platform lifting button

12- Emergency descent control

https://truckmanualshub.com/

B - BASKET CONTROL STATION

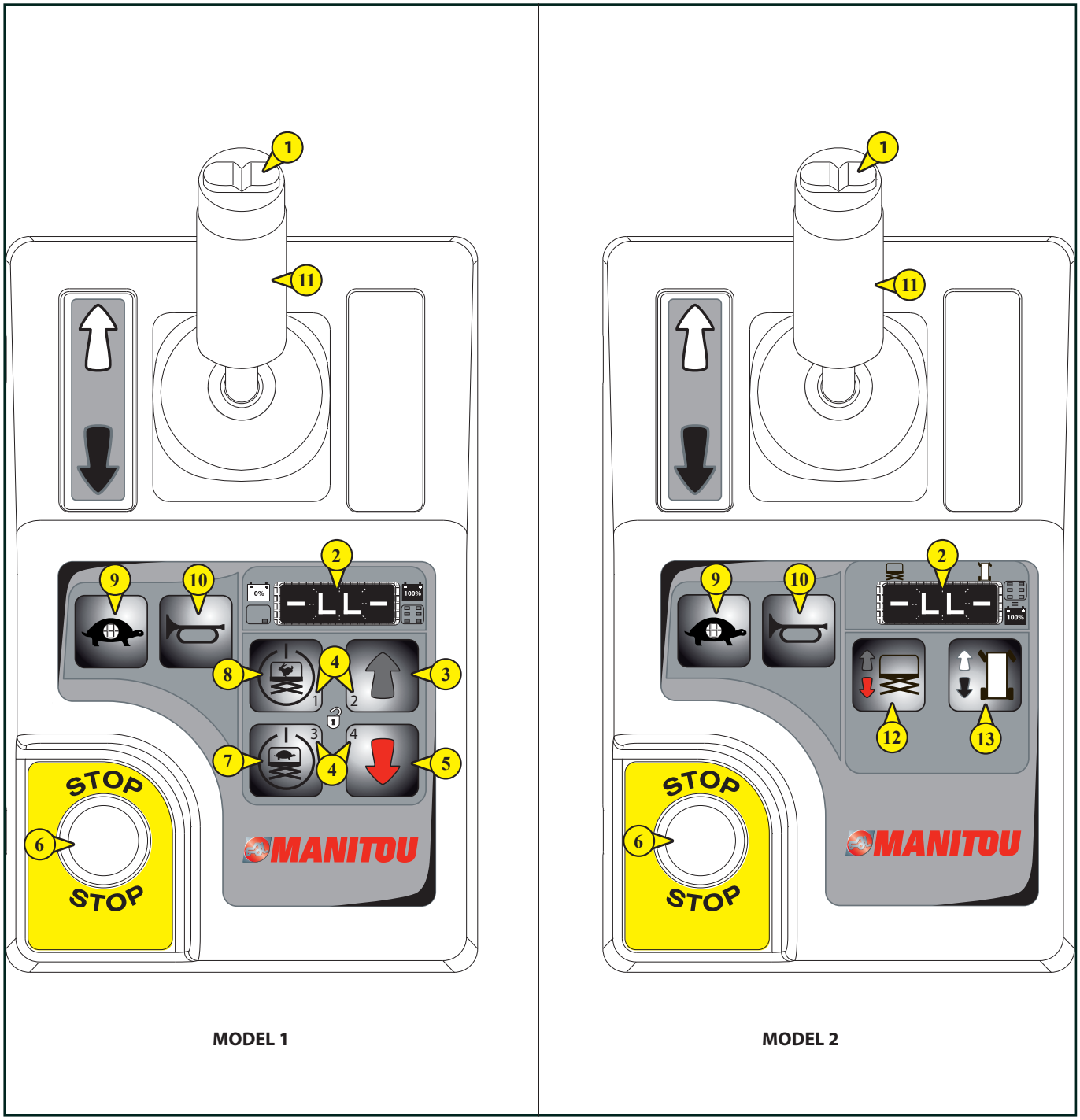

https://truckmanualshub.com/

B - Basket control station

1- Steering function thumb switch

2- Diagnostics screen/LED battery charge indicator

3- Lifting platform lifting button **(model 1)**

4- Digital keypad (as applicable) **(model 1)**

5- Lifting platform lowering button **(model 1)**

6- Red Emergency Stop knob

7- Slow speed lifting confirmation button **(model 1)**

8- High speed lifting confirmation button **(model 1)**

9- Translation speed selector

10- Buzzer button

11- Proportional control lever and translation and steering function confirmation switch

12- Lift function button **(model 2)**

13- Drive function button **(model 2)**

https://truckmanualshub.com/

78 SEC LIFTING PLATFORM EQUIPMENT

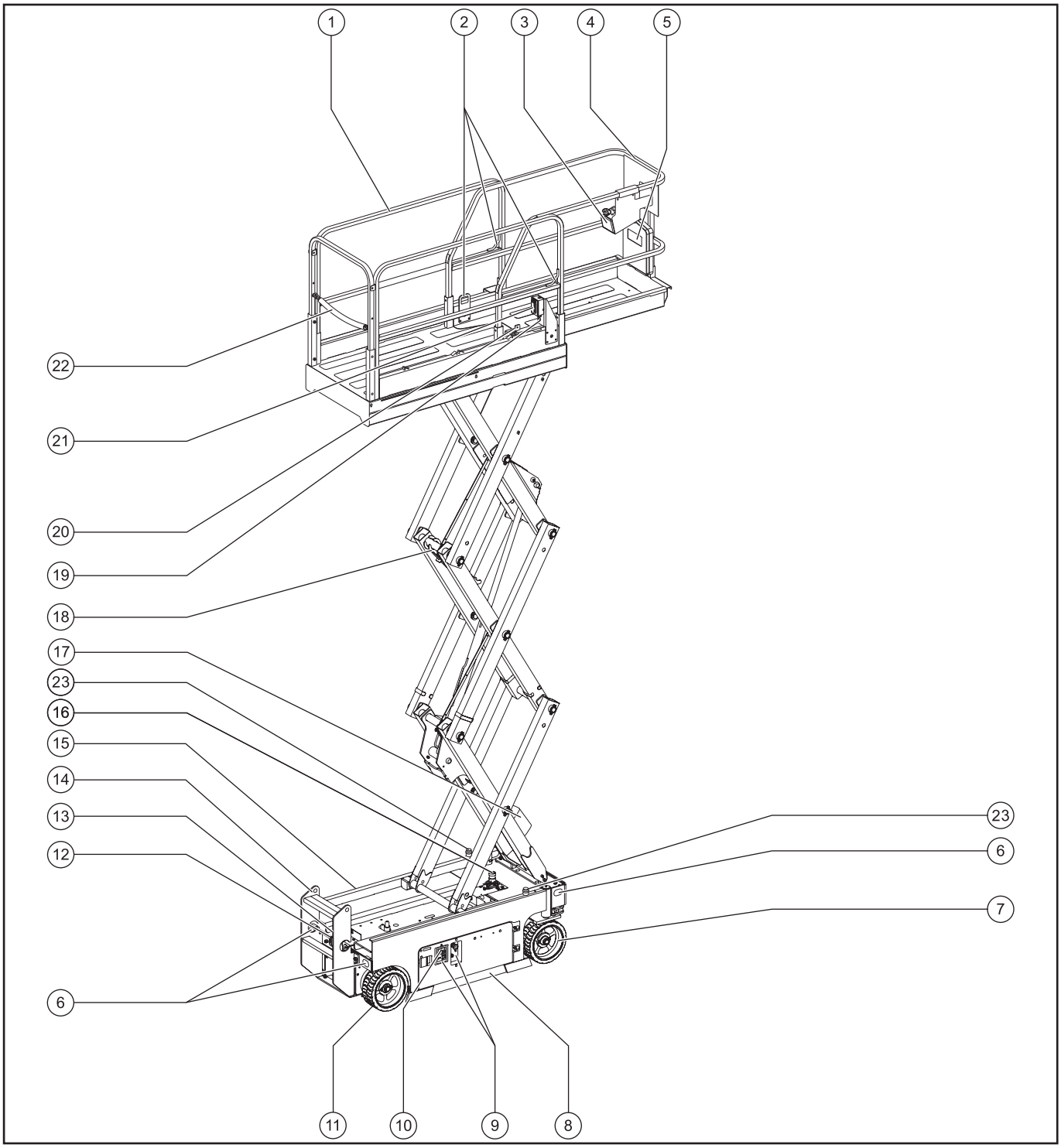

https://truckmanualshub.com/

1- Lifting platform safety ramp

2- Harness attachment point

3- Lifting platform controls

4- Lifting platform extension

5- Manuals box

6- Tie-down for transportation

7- Steering wheel

8- Pothole protection

9- Ground controls

10- Liquid crystal screens

11- Non-steering wheels

12- Emergency descent button

13- Brake release pump

14- Ladder for access and tie-down for transportation

15- Battery charger (on the opposite side of the machine)

16- Tilt sensor

17- Reverser (option)

18- Safety arm

19- Air line to the lifting platform (as an option)

20- Lifting platform extension pedal

21- Lifting platform breaker output

22- Lifting platform access barrier or chain

23- Flashing light

https://truckmanualshub.com/

100 SEC LIFTING PLATFORM EQUIPMENT

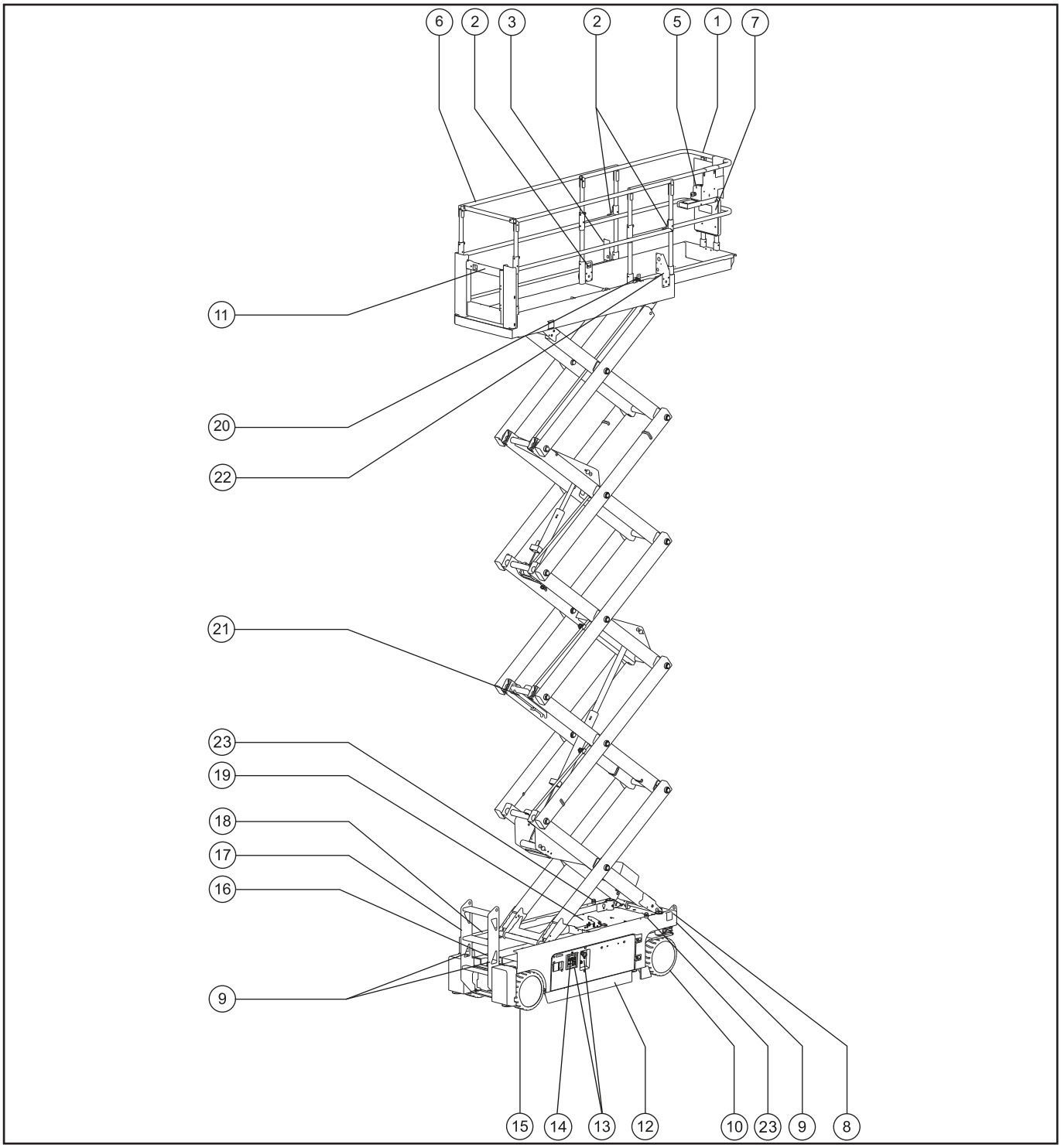

https://truckmanualshub.com/

1- Lifting platform extension

2- Harness attachment point

3- Air line to the lifting platform (as an option)

5- Lifting platform controls

6- Lifting platform safety ramps

7- Manuals box

8- Emergency descent button

9- Tie-down for transportation

10- Steered and drive wheels

11- Lifting platform access door

12- Pothole protection

13- Ground controls

14- Liquid crystal screens

15- Rear wheels

16- Brake release pump

17- Ladder for access/tie-down for transportation

18- Battery charger (on the opposite side of the machine)

19- Tilt sensor (under the bonnet)

20- Lifting platform extension pedal

21- Safety arm

22- Differential breaker output

23- Flashing Light

https://truckmanualshub.com/

120 SE LIFTING PLATFORM EQUIPMENT

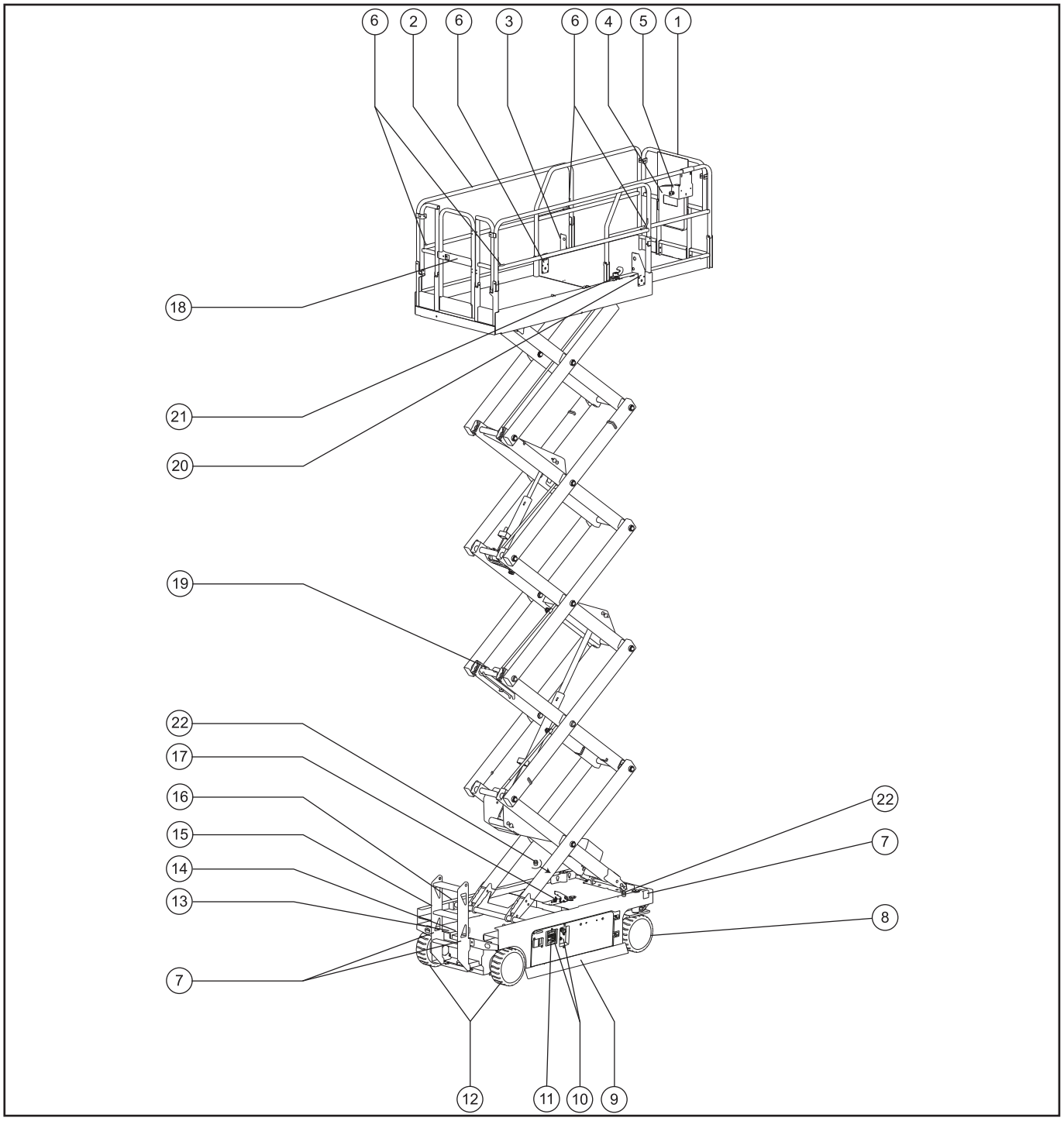

https://truckmanualshub.com/

1- Lifting platform extension

2- Lifting platform safety ramps

3- Air line to the lifting platform (as an option)

4- Manuals box

5- Lifting platform controls

6- Harness attachment point

7- Tie-down for transportation

8- Steered and drive wheels

9- Pothole protection

10- Ground controls

11- Liquid crystal screens

12- Rear wheels

13- Emergency descent button

14- Brake release pump

15- Ladder for access/tie-down for transportation

16- Battery charger (on the opposite side of the machine)

17- Tilt sensor (under the bonnet)

18- Lifting platform access door

19- Safety arm

20- Differential breaker output

21- Lifting platform extension pedal

22- Flashing light

https://truckmanualshub.com/

1- 7 A BREAKER FOR THE ELECTRICAL CIRCUITS

- Location of the 7A breaker

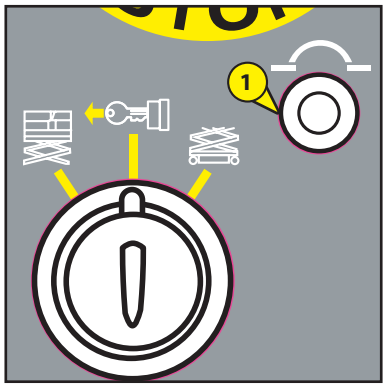

2- 3-POSITION KEY-OPERATED SWITCH (LIFTING PLATFORM/STOP/GROUND)

- Set the ignition switch to Lifting Platform controls (2-a) to switch on the lifting platform controls.
- Set the ignition switch to the OFF position to switch off the machine (2-b).
- Set the ignition switch to Ground controls to switch on the ground controls (2-c).

NB: Ensure that the red Emergency Stop knobs for the ground controls and the lifting platform are pulled out to the ON position.

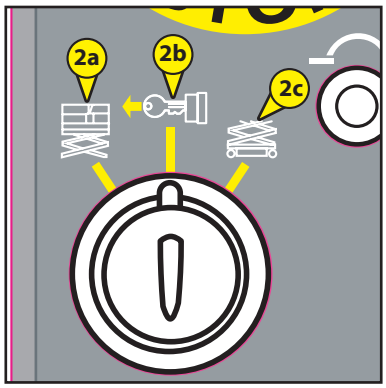

3- PLATFORM LIFTING / LOWERING SELECTOR SWITCH

To activate the lifting platform lowering function:

- Hold down the "Dead Man's" button (3-a) together with the button (3-b) for activating the platform lifting function.
- Hold down the "Dead Man's" button (3-a) together with the button (3-c) for activating the platform lowering function.

NB:

- *Releasing the "Dead Man's" button stops the selected movement.*
- *The anti-pothole protection systems must be deployed when performing a lifting movement.*

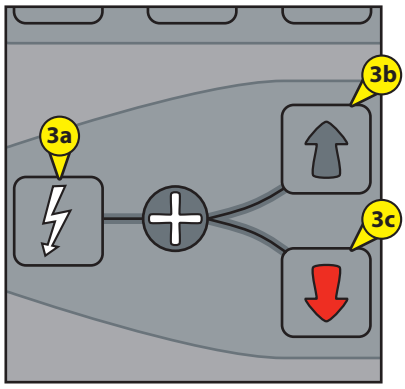

https://truckmanualshub.com/

4- Red Emergency Stop knob

- Push the red Emergency Stop knob to the OFF position to switch off all the machine's functions.
- Pull the red Emergency Stop knob to the ON position to be able to use the machine.

5- Emergency descent control

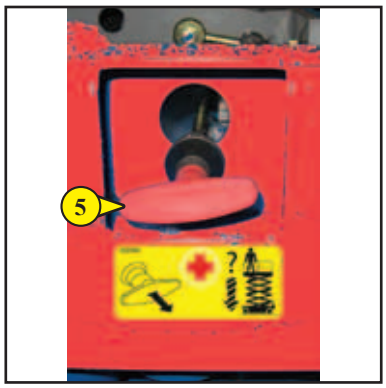

If the operator should be suddenly taken ill or find himself unable to manoeuvre the lifting platform, or in the event of an electrical breakdown, the person on the ground can take over control of the platform.
(see Rescue Procedure, Page 2-40)

https://truckmanualshub.com/

8- Translation speed selection button

- Press this button to activate the slow speed translation function. The indicator light illuminated when slow speed translation function is selected.

MODEL 1 (9 and 10)

9 Slow or high speed lifting confirmation button

- Hold down the high speed (9-a) or slow speed (9-b) lifting selection button and simultaneously press one of the lifting arrows (9-c).

When the lifting platform descends, it must stop at approx. 2.1 m above the ground. Ensure that the area under the lifting platform is clear and free of any obstacles before continuing the manoeuvre. To continue to lower the lifting platform, release the control lever and then operate it again 5 seconds later.

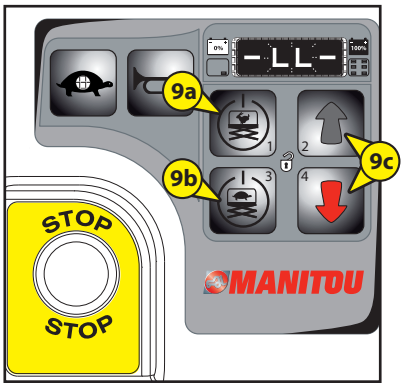

10- Proportional control lever and translation function confirmation switch

- Move the control lever in the direction indicated by the white arrow on the control panel to move the machine forward in the direction indicated by the white arrow. Move the control lever in the direction indicated by the black arrow on the control panel to move the machine forward in the direction indicated by the black arrow.
- The joystick has a so-called "Dead Man's" push button. This must be pressed down at the same time as any movement is instructed. Releasing it stops the movement.

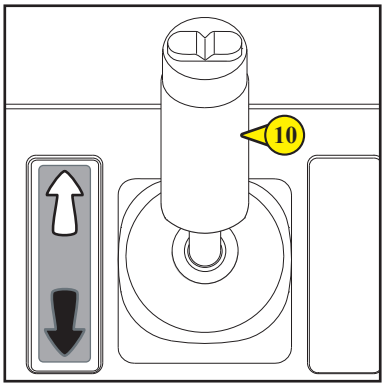

https://truckmanualshub.com/

MODEL 2 (9 AND 10)

9-1 LIFT FUNCTION BUTTON

- Push this button (9d) to activate the lift function and follow the instructions paragraph 10.

9-2 DRIVE FUNCTION BUTTON

- Push this button (9e) to activate the drive function and follow the instructions paragraph 10.

10- PROPORTIONAL CONTROL LEVER AND TRANSLATION / LIFTING FUNCTION CONFIRMATION SWITCH

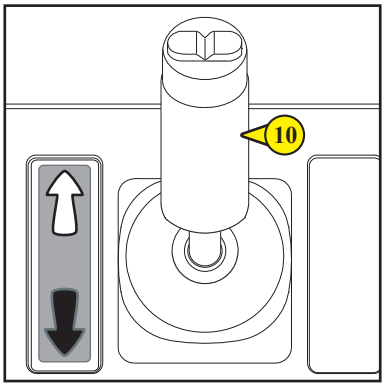

- TRANSLATION : Move the control lever in the direction indicated by the white arrow on the control panel to move the machine forward in the direction indicated by the white arrow. Move the control lever in the direction indicated by the black arrow on the control panel to move the machine forward in the direction indicated by the black arrow.
- LIFTING : Move the control lever in the direction indicated by the white arrow on the control panel to lift the platform. Move the control lever in the direction indicated by the black arrow to lower the platform.
- The joystick has a so-called "Dead Man's" push button. This must be pressed down at the same time as any movement is instructed. Releasing it stops the movement.

When the lifting platform descends, it must stop at approx. 2.1 m above the ground. Ensure that the area under the lifting platform is clear and free of any obstacles before continuing the manoeuvre. To continue to lower the lifting platform, release the control lever and then operate it again 5 seconds later.

https://truckmanualshub.com/

11- Steering function thumb switch

- Push the thumb switch in a direction to activate the steering function.

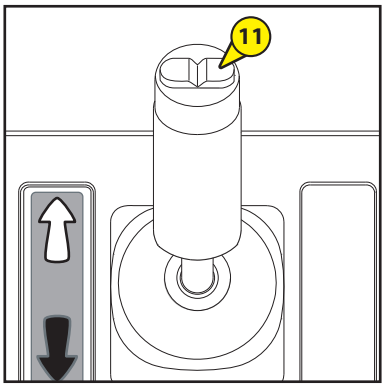

12- Red Emergency Stop knob

- Push the red Emergency Stop knob to the OFF position to switch off all the machine's functions. Pull out the red Emergency Stop knob to the ON position to be able to use the machine.

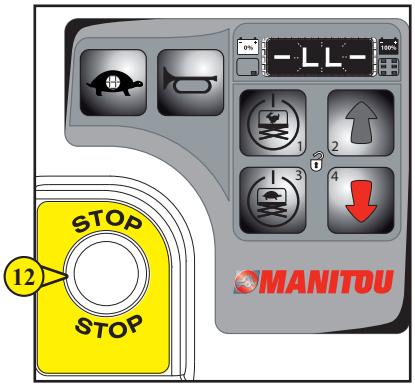

13- Diagnostics display

- Diagnostics display, battery charge indicator and lifting platform overload indicator.

14- Buzzer button

- Push in the buzzer button to activate the buzzer. Release the buzzer button to switch off the buzzer.

https://truckmanualshub.com/

1- LIFTING PLATFORM EXTENSION AND RETRACTION

- Push the lifting platform extension locking pedal with your foot.
- Push the extension until the lifting platform has extended to the desired position.
- Do not lean on the lifting platform extension while it is deploying.
- Lower the lifting platform extension locking handle.

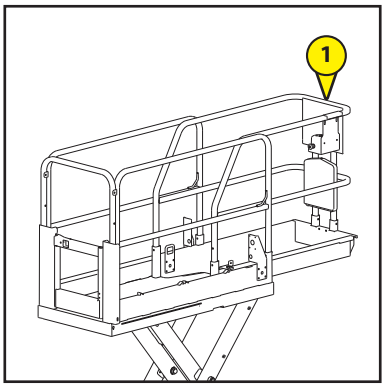

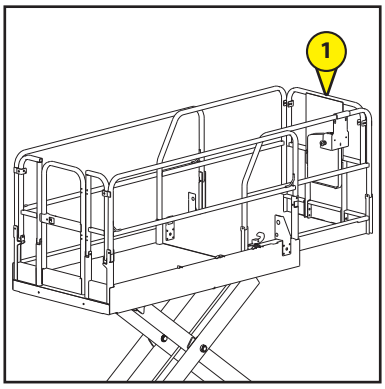

2- MAINTENANCE ARM

Use the maintenance arm for any work on the scissors when they are in transport position.

- Raise the scissors, using the base console, to free the maintenance arm.
- Swivel the maintenance stand to position it.
- Using the base console, instruct the scissors to descend until the maintenance arm is in contact with the lower scissors axis.
- Switch off the lifting platform using the Emergency Stops.
- Perform the necessary repairs.

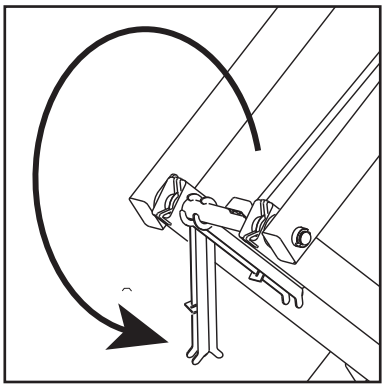

https://truckmanualshub.com/

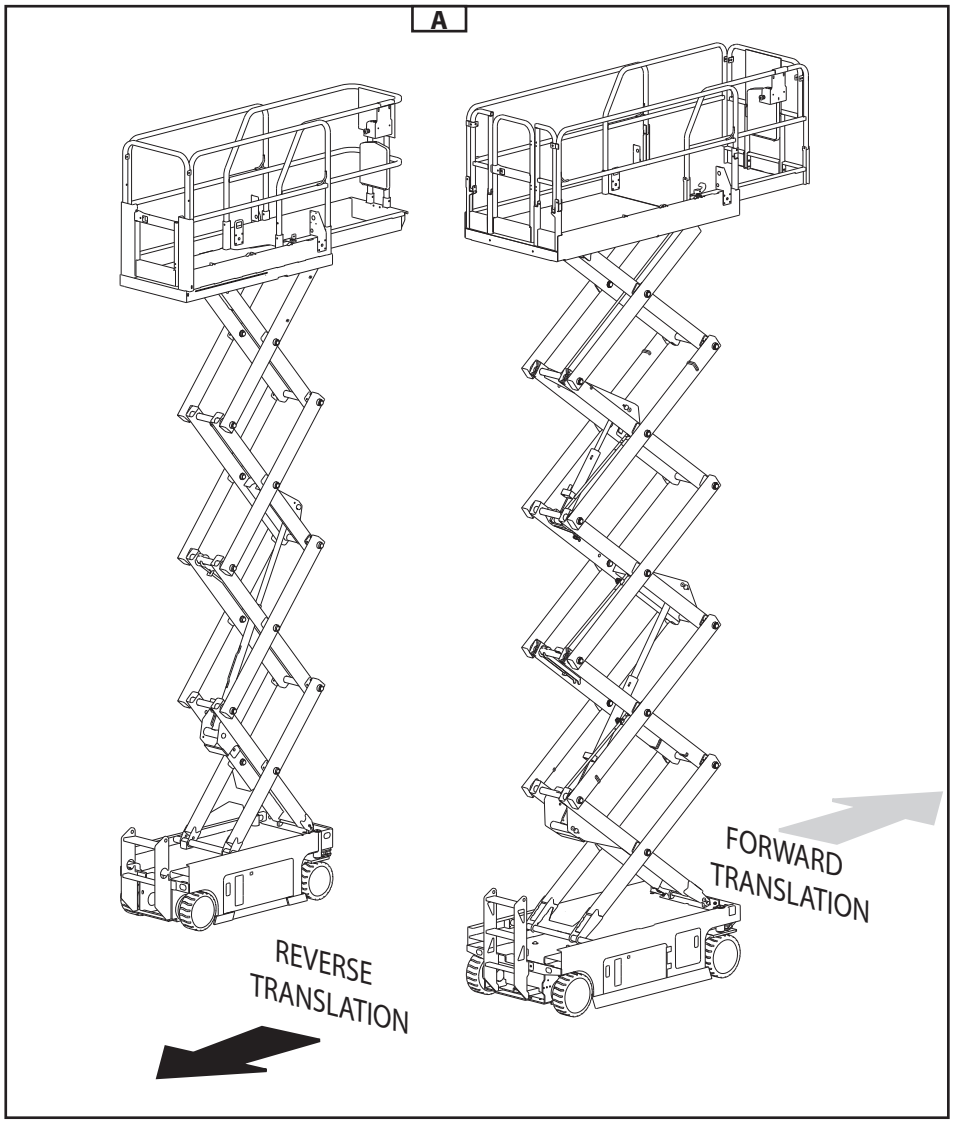

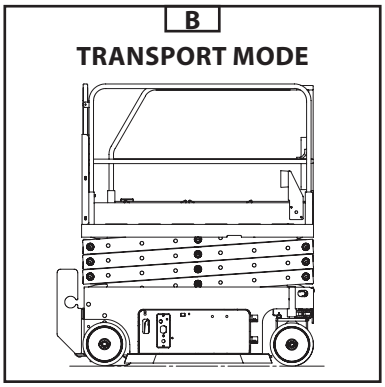

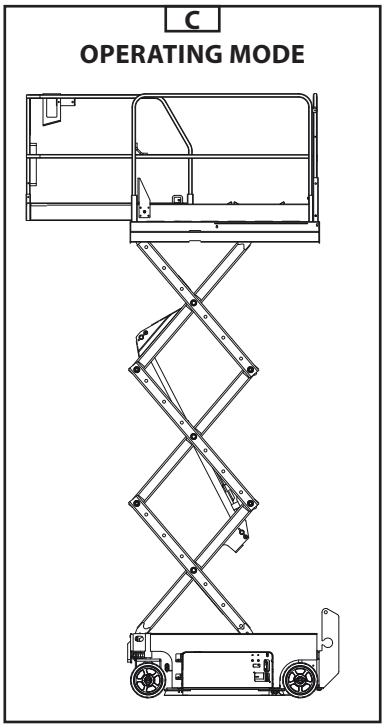

MOVING IN TRANSPORT / OPERATING MODE

- The lifting platform has two distinct movement modes: transport mode (Fig. B) and operating mode (Fig. C) (progress direction (Fig. A).
- Transport mode: the lifting platform's scissors are in the Low position. This mode enables you to move at high speed.
  (See the CHARACTERISTICS chapter page 2-7).
- Operating mode: the scissors are raised. In this mode, translations are made at slow speed.

In operating mode, any movement over broken ground, unstable surfaces, slopes greater than the authorised angles of inclination (see the CHARACTERISTICS chapter, page 2-7), likely to cause the lifting platform to tip over or become unbalanced, are FORBIDDEN.

In the case of a steep slope: place no load in the basket and use reverse gear.

https://truckmanualshub.com/

SET-UP AT THE WORK AND LIFTING LOCATION

- The lifting platform is designed to operate on a flat, horizontal surface; it is important to clear the space in which the lifting platform will be working.
- Bring the lifting platform to the work location.
- If necessary, load the equipment to be carried (stack it so that it does not hinder the user and avoids the possibility of something falling off).
- Climb onto the lifting platform.

Safety helmets and harnesses must, compulsorily, be worn.

- Press the "Dead Man's" trigger and start to manoeuvre to position yourself in the operating area.

When manoeuvring the lifting platform (lifting...), look all around and below you. Pay particular attention to the electrical cables and any item that may be in the lifting platform's area of operation.

Become familiar with the instruments on the ground maintenance and emergency station and in the basket described in the preceding pages and, in particular, the warnings specifying the risks involved in performing certain manoeuvres.

SAFETY SYSTEMS

- When the diagnostic displays show "OL" flashing, this means that the lifting platform is overloaded and that no function is activated any longer. An alarm should sound.
  - Solution : Push the red Emergency Stop knob to the OFF position. Relieve the weight.
- When the lifting platform reaches the maximum authorised level of tilt, it must stop rising and the tilt alarm should sound at 180 beeps per minute. The diagnostic displays show "LL". All "AGGRAVATING" raising movements are prohibited as a safety precaution.
  - Solution : set the lifting platform on a more horizontal surface, only making movements that do not aggravate the situation further.

https://truckmanualshub.com/

Descent

- When the work has been completed: lower the scissors to bring the lifting platform to transport position.

Pay attention to any people on the ground while descending, especially when the extension is still extended.tie.

Switching off the lifting platform

- When the lifting platform is no longer being used, switch off the ignition by moving the ignition switch to the Neutral position (see 2 – Ignition switch).

Loading / unloading the lifting platform

Check that the safety instructions for the transport platform are being correctly applied before loading the lifting platform and ensure that the driver of the means of transport has been informed of the lifting platform's dimensional characteristics and weight
(See the CHARACTERISTICS chapter, pages 2-14 to 2-23).

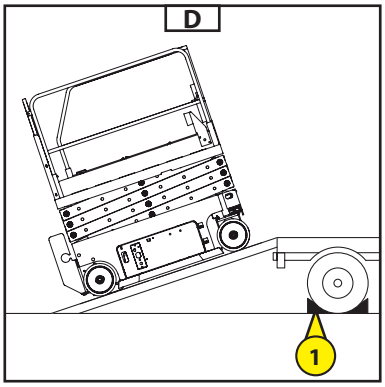

- The lifting platform must be in transport position while being loaded onto a truck bed:
- The steered wheels must be facing the ramp (see chapter 1 to determine the direction of travel – safety instructions and advice; §SAFETY STICKERS; 1).
- The extension must be retracted and locked.

Ensure that the truck bed is sufficiently large and has sufficient load-bearing capacity to transport the lifting platform. Also check the bed's permissible ground contact pressure with regard to the lifting platform.

There is a risk of the lifting platform losing grip (slipping or skidding) while climbing or descending the loading ramps, if the ramps are wet, muddy or show traces of humidity. For this reason, a winch connected to the machine's tie-down points is necessary as a safety measure.

Loading

- Fasten the loading ramps to the truck bed so as to have the smallest angle possible for embarking the lifting platform (Fig. D).
- Lock the truck bed's wheels 1 (Fig. D).

Please adapt the lifting platform's translation speed by controlling it with the translation joystick.

https://truckmanualshub.com/

Tying down the machine for transportation by truck or trailer

- Always chock the machine's wheels in preparation for transport.
- Retract and tie down the lifting platform's extension unit.
- Use the tie-down points on the chassis to fasten the machine to the truck bed's surface (Figs. E and F).
- Use at least two chains or straps.
- Use chains or straps with sufficiently large load-retaining strength.
- Fasten chocks to the truck bed in front of and behind each of the lifting platform's tyres 1 (Fig. E).
- Also fasten chocks to the truck bed on the inside and outside of each tyre 1 (Fig. F).
- Turn the ignition switch to the OFF position and remove the key before transport.
- Inspect the whole machine to discover any loose or poorly fastened elements.
- If the ramps have been folded, tie them down with straps before transport.

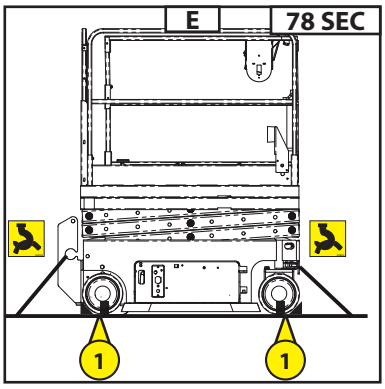

Unloading

Please adapt the lifting platform's translation speed by controlling it with the translation joystick.

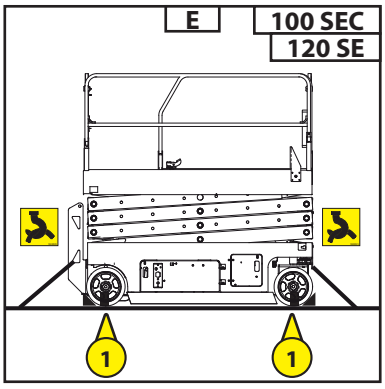

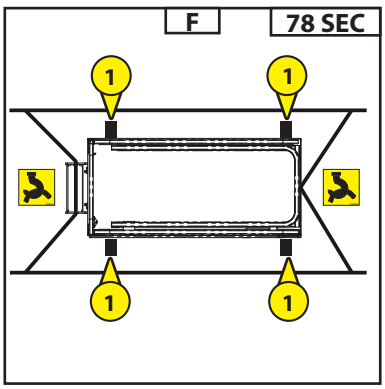

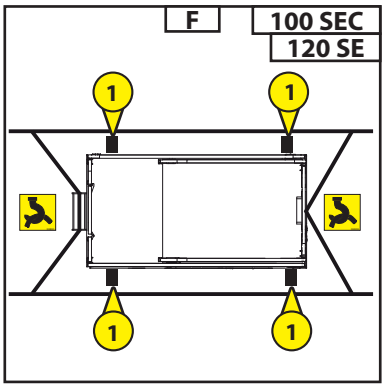

https://truckmanualshub.com/

- This paragraph describes the procedures to follow and the controls to use in the event of a problem occurring (breakdown of the lifting platform or someone trapped in the basket) while the lifting platform is working.

- When taking charge of the machine and regularly thereafter, the steps of this procedure must be read and fully understood by the operator and any person whose responsibilities focus on activities in contact with the machine.

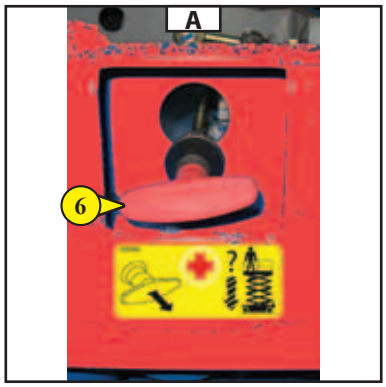

IN THE EVENT OF AN ELECTRICAL BREAKDOWN OR THE OPERATOR FALLING ILL

- If the user is taken ill or accidently triggers the basket emergency stop or finds themselves unable to manoeuvre, the person present on the ground can take control of the lifting platform.
- Follow the instructions below:

  Pull the emergency descent control 6 (Fig. A).
  Result: the lifting platform should descend. The descent alarm does not sound.

Pay attention to any constructions or other items that may be under the lifting platform.

https://truckmanualshub.com/

RELEASING THE BRAKES

The lifting platform may only be towed over a short distance and necessarily by a machine with significant braking power in order to be able to hold it and with a connecting bar between the two machines.

- To put the lifting platform into freewheeling mode, the platform must not be subject to any translation stresses caused by a slope. The wheels must be able to turn freely.
- Push the brake release button to open the brake valve 1 (Fig. B) on the block 3 (Fig. C).
- Press the brake release pump button 2 (Fig. B).

- We would advise against towing lifting platforms 78 SEC - 100 SEC and 120 SE.
- If the machine must be towed, do not exceed 3.2 km/h.

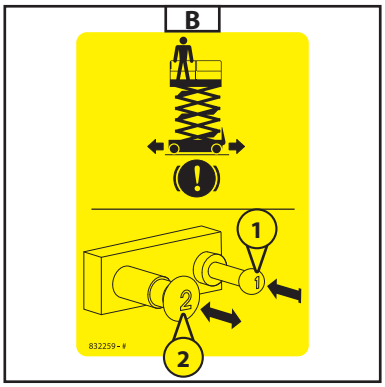

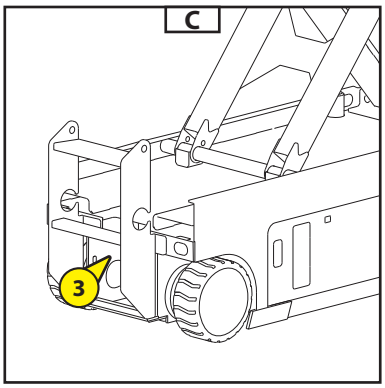

https://truckmanualshub.com/

https://truckmanualshub.com/

3 - MAINTENANCE

https://truckmanualshub.com/

https://truckmanualshub.com/

CONTENTS

MANITOU REPLACEMENT PARTS AND ORIGINAL EQUIPMENT 3-4

COMMISSIONING CHECK LIST 3-5

LUBRICANTS AND FUEL 3-6

MAINTENANCE TABLE 3-7

A - DAILY OR EVERY 10 HOURS OF OPERATION 3-8

B - EVERY 50 HOURS OF OPERATION 3-15

C - EVERY 250 HOURS OF OPERATION 3-16

D - EVERY 500 HOURS OF OPERATION 3-19

E - EVERY 1000 HOURS OF OPERATION 3-20

F - EVERY 2000 HOURS OF OPERATION 3-21

G - EVERY 4000 HOURS OF OPERATION 3-22

H - OCCASIONAL MAINTENANCE 3-23

https://truckmanualshub.com/

MANITOU ORIGINAL EQUIPMENT AND REPLACEMENT PARTS

OUR PERSONNEL LIFTING PLATFORMS MUST ONLY BE SERVICED USING MANITOU ORIGINAL PARTS..

BY AUTHORISING THE USE OF MANITOU NON-ORIGINAL PARTS,

YOU RISK

- From a legal viewpoint, becoming liable in the event of an accident.
- From a technical viewpoint, causing operating breakdowns or reducing the lifting platform's operating life..

THE USE OF COUNTERFEIT PARTS OR COMPONENTS NOT APPROVED BY THE MANUFACTURER,
RESCINDS THE BENEFITS ACCRUING FROM THE CONTRACTUAL WARRANTY.

BY USING MANITOU ORIGINAL PARTS IN YOUR SERVICING OPERASTIONS,

YOU BENEFIT
FROM KNOW-HOW

Through its network, MANITOU provides the operator with,

- Know-how and competence.
- Guarantee of the quality of the work performed.
- Original replacement parts.
- Help with preventive maintenance.
- Efficient diagnostic assistance.
- Improvements based on feedback from experience.
- Training of the operating personnel.
- Only the Manitou network knows the lifting platform's design in detail and therefore has the best technical capabilities to provide for its maintenance.

ORIGINAL REPLACEMENT PARTS ARE ONLY DISTRIBUTED BY MANITOU
AND ITS DEALER NETWORK.
The list of dealers in the network is available on the MANITOU site www.manitou.com

https://truckmanualshub.com/

COMMISSIONING CHECK LIST

0 = Good 1 = Missing 2 = Incorrect

100	IC ENGINE	
01	Air filter	
02	Fuel tank	
03	Fuel lines - Filter	
04	Injection or carburettor system	
05	Radiator and cooling system	
06	Belts	
07	Hoses	
101	TRANSMISSION	
01	Reversing system	
02	Gearbox control	
03	Cut-off pedal	
04	Clutch	
102	AXLES / TRANSFER BOX	
01	Function and sealing	
02	Endstop adjustment	
103	HYDRAULIC / HYDROSTATIC CIRCUIT	
01	Tank	
02	Pumps and attachments	
03	Tightness of the connections	
04	Lifting cylinder(s)	
05	Tilting cylinder(s)	
06	Accessory cylinder(s)	
07	Telescope cylinder(s)	
08	Compensation cylinder(s)	
09	Steering cylinder(s)	
10	Distributor	
11	Balancing valve	
104	BRAKING CIRCUIT	
01	Operation of the service and parking brake	
02	Brake fluid level	
105	LUBRICATION AND GREASING	
106	JIB / MANISCOPIC / MANIACCES ASSEMBLY	
01	Beam and telescope(s)	
02	Skid	
03	Joints	
04	Protective plate	
05	Forks	
107	MAST ASSEMBLY	
01	Fixed and mobile uprights	
02	Protective plate	
03	Chains	
04	Pulleys	
05	Forks	

108	ACCESSORIES	
01	Adaptations to the machine	
02	Hydraulic connections	
109	CAB / PROTECTOR / ELECTRICAL CIRCUIT	
01	Seat	
02	Dashboard and radio	
03	Buzzer and alarm light / safety system	
04	Heating / Air conditioning	
05	Windscreen wiper / Windscreen washer	
06	Operating warning	
07	Reversing warning	
08	Road lights	
09	Additional lights	
10	Flashing light	
11	Battery	
110	WHEEL	
01	Rims	
02	Tyres / Pressure	
111	NUTS AND BOLTS	
112	CHASSIS AND BODYWORK	
113	PAINTWORK	
114	GENERAL OPERATION	
115	INSTRUCTIONS MANUAL	
116	CUSTOMER'S INSTRUCTIONS	

https://truckmanualshub.com/

LUBRICANTS AND FUEL

USE THE RECOMMENDED LUBRICANTS AND FUEL:
- Oils may not be mixed when topping up.
- MANITOU oils are perfectly suitable for easy draining.

HYDRAULIC SYSTEM				
COMPONENTS TO BE LUBRICATED	CAPACITY	RECOMMENDATION	PACKAGING	REFERENCE
HYDRAULIC OIL RESERVOIR	14,2 Litres	MANITOU Hydraulic ISO VG 46 oil	5 l 20 l 55 l 209 l	545500 582297 546108 546109

LIFTING STRUCTURE			
COMPONENTS TO BE LUBRICATED	RECOMMENDATION	PACKAGING	REFERENCE
GENERAL LUBRICATION	MANITOU high-performance grease	Cartridge 400 g	479330

https://truckmanualshub.com/

(1):COMPULSORY OVERHAUL AFTER 500 HOURS or 6 MONTHS
This overhaul must compulsorily be performed after approximately the first 500 hours of operation or 6 months after the machine is put into service (when the earlier of the two periods is reached).

A = REGULATE, C = CHECK, G = GREASE, N = CLEAN, P = BLEED, R = REPLACE, V = DRAIN	PAGE	(1)	DAILY OR EVERY 10 HOURS OF OPERATION	EVERY 50 HOURS OF OPERATION	EVERY 250 HOURS OF OPERATION	EVERY 500 HOURS OF OPERATION OR 6 MONTHS	EVERY 1000 HOURS OF OPERATION OR 1 YEAR	EVERY 2000 HOURS OF OPERATION OR 2 YEARS	EVERY 4000 HOURS OF OPERATION	OCCASIONAL
TYRES										
Wheel nuts	3-14	C	C	<<<	<<<	<<<	<<<	<<<	<<<	
Wheel and tyres	3-14/22	C	C	<<<	<<<	<<<	<<<	<<<	<<<	R
LIFTING STRUCTURE										
Overload	3-16				C	<<<	<<<	<<<	<<<	
Scissors skids	3-19						C/R	<<<	<<<	
HYDRAULICS										
Hydraulic oil	3-14/18	C	C	<<<	<<<	V/R	<<<	<<<	<<<	
Emergency descent	3-18	C	C	<<<	<<<	<<<	<<<	<<<	<<<	
Snifter cap	3-17				N	<<<	<<<	<<<	<<<	
Hydraulic return oil filter cartridge	3-18	R				R	<<<	<<<	<<<	
Hydraulic movement speeds	3-19						C**	<<<	<<<	
Condition of the flexible tubing and rubber hoses	3-19						C**	<<<	<<<	
Condition of the cylinders (leaks, cylinder rods)	3-19						C**	<<<	<<<	
Hydraulic circuit pressures	3-20							C**	<<<	
Hydraulic circuit flows	3-20							C**	<<<	
ELECTRICITY										
Condition of the joystick bellows	3-14		C	<<<	<<<	<<<	<<<	<<<	<<<	
Tilt sensor	3-10	C	C	<<<	<<<	<<<	<<<	<<<	<<<	
Battery electrolyte level	3-15	C		C	<<<	<<<	<<<	<<<	<<<	R
Battery electrolyte density	3-16	C			C	<<<	<<<	<<<	<<<	
Condition of the cables and the cable bundles	3-19						C**	<<<	<<<	
TRANSMISSION										
Braking	3-10	C	C	<<<	<<<	<<<	<<<	<<<	<<<	
Translation motor	3-17/19	C				C	C	<<<	<<<	
Disc brake wear	3-21								C**	
CHASSIS										
Steering pivot axes	3-15			G	<<<	<<<	<<<	<<<	<<<	
LIFTING PLATFORM										
General inspection	3-8	C	C	<<<	<<<	<<<	<<<	<<<	<<<	
Function control	3-8	C	C	<<<	<<<	<<<	<<<	<<<	<<<	
Safety stickers	3-17				C	<<<	<<<	<<<	<<<	
Overload	3-18				C	<<<	<<<	<<<	<<<	
Stopping Distance	3-18				C	<<<	<<<	<<<	<<<	
Fitting slings on the lifting platform	3-23									XXX

(*): Every 10 hours for the first 50 hours and then a final time after 250 hours.
(**): Contact your dealer.

https://truckmanualshub.com/

A - DAILY OR EVERY 10 HOURS OF OPERATION

A1 - General inspection

CHECK

- Scrupulously inspect the machine and check that there are no fractured welds, corrosion or structural damage, loose or missing nuts or bolts, hydraulic leaks, damaged control cables or loose electrical connections.
- Check the absence of any damage in the lanyard anchorage points.

A2 - Function check

CHECK

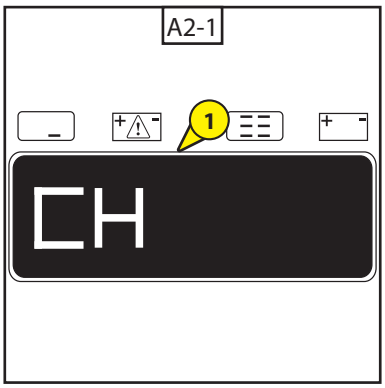

Any malfunction on the part of the lifting platform must be discovered every day before moving off in the lifting platform.
In the event of a malfunction being discovered, identify it and place the lifting platform out of service.

Please refer to Chapter 2 for the markings for location of the controls.
The lifting platform must be set on a horizontal surface in a clear and unencumbered area.

- CHECKING THE GROUND CONTROLS:

- Pull the red Emergency Stop knobs for the ground controls and the lifting platform to the ON position.
- Set the ignition switch to Ground controls.
- Look at the lifting platform controls' diagnostics display
  > The "Bottom Station" display should be similar to the illustration in Fig. A2-1 (ref 1).

Emergency Stop

- Push the red Emergency Stop knobs for the ground controls to the OFF position.
  > Result: no function should be active.
- Pull the Emergency Stop knob to the ON position.

Lifting/lowering functions

- The buzzers for this machine and the standard buzzer all come from the same central alarm. The buzzer emits a continuous noise. The descent alarm emits 60 beeps per minute. The alarm emits 180 beeps per minute when the machine is tilted with the anti-pothole protection systems undeployed.
- Activate the lifting function.
  > Result: the lifting platform should rise.
- Activate the descent function.
  > Result: the lifting platform should descend. The descent alarm should flash and sound when the lifting platform descends.

Emergency descent

- Activate the lifting function and raise the lifting platform approx. 60 cm.
- Pull the emergency descent control:
  > Result: the lifting platform should descend. The descent alarm does not sound.
- Set the ignition switch to Lifting Platform controls.

https://truckmanualshub.com/

Perform the basket control checking of the platform according to your basket control model (model 1 or 2).

- CHECKING THE BASKET CONTROLS:

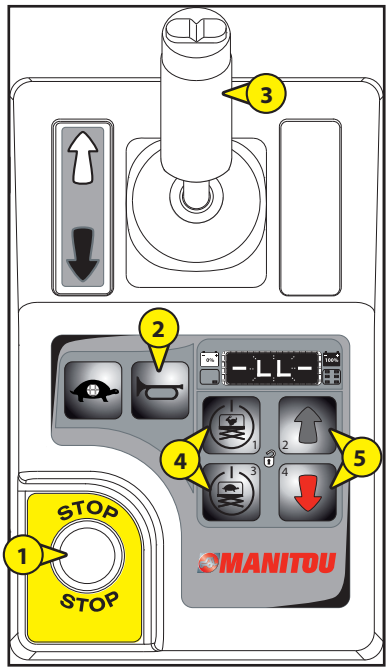

Emergency Stop (1)

- Push the lifting platform's red Emergency Stop knob to the OFF position.
  > Result: no function should be active.

Buzzer (2)

- Pull the red Emergency Stop knob to the ON position.
- Press the buzzer button.
  > Result: the buzzer should sound.

Function validation switch (3)

- Do not hold the control lever's function validation switch.
- Slowly move the control lever in the direction indicated by the black arrow.
  > Result: no function should be active.

Lifting confirmation buttons (4)

- Do not press the high speed or slow speed lifting confirmation buttons.
- Press the lifting platform lifting and descent button.
  > Result: the lifting function should not be active.
- Do not press the lifting platform lifting and descent button.
- Press the high speed or slow speed lifting confirmation button.
  > Result: the lifting function should not be active.

Lifting /descent functions (5)

- Hold down the high speed lifting confirmation button.
- Press the lifting platform lifting button.
  > Result: the lifting platform should rise. The anti-pothole protection systems should deploy.
- Release the high speed lifting confirmation button or the lifting platform lifting button.
  > Result: the lifting platform should stop rising.
- Hold down the high speed lifting confirmation button.
- Press the lifting platform lowering button.
  > Result: the lifting platform should descend. The descent alarm should sound when the lifting platform is descending.
- Release the high speed lifting confirmation button or the lifting platform lowering button.
  > Result: the lifting platform should stop descending.
- Hold down the slow speed lifting confirmation button.
- Press the lifting platform lifting button.
  > Result: the lifting platform should rise. The anti-pothole protection systems should deploy.
- Release the slow speed lifting confirmation button or the lifting platform lifting button.
  > Result: the lifting platform should stop rising.
- Hold down the slow speed lifting confirmation button.
- Press the lifting platform lowering button.
  > Result: the lifting platform should descend at high speed. The descent alarm should sound when the lifting platform is descending.
- Release the slow speed lifting confirmation button or the lifting platform lowering button.
  > Result: the lifting platform should stop descending.

- When the lifting platform descends, it should stop at approx. 2.1m above the ground. Ensure that the area under the lifting platform is clear and free of obstacles before continuing with the manoeuvre. To continue the lifting platform's descent, release the control lever and then operate it again after 5 seconds.

https://truckmanualshub.com/

Steering

Remark: when testing the translation and steering functions, stand in the lifting platform and turn in the directions in which the machine is moving.

- Hold down the control lever's function validation switch.
- Push the thumb switch on the top left of the control lever:
  > Result: the steered wheels should turn in the left-hand direction:
- Push the thumb switch in the right-hand direction:
  > Result: the steered wheels should turn in the right-hand direction.

Translation and braking

- Hold down the function validation switch.
- Slowly move the control lever in the direction indicated by the white arrow on the control panel until the machine starts to move; then return the lever to the central position.
  > Result: the machine should move in the direction indicated by the white arrow on the control panel, then stop suddenly.
- Slowly move the control lever in the direction indicated by the black arrow on the control panel until the machine starts to move; then return the lever to the central position.
  > Result: the machine should move in the direction indicated by the black arrow on the control panel, then stop suddenly.

Remark: the brakes should be capable of holding the machine on any slope that it is able to cross.

Tilt sensor

Remark: perform this test on the ground using the lifting platform controller. Do not remain in the lifting platform.

- Lower the lifting platform completely.
- Set a 5 x 10cm wooden chick or a similar item in front of both wheels on the same side and raise the machine onto them.
- Raise the basket approx. 2.1m above the ground.
  > Result: the lifting platform should stop rising and the tilt alarm should sound at 180 beeps per minute. The lifting platform's LED control screen should show "LL" and the liquid crystal control screen at ground level should show "LL: Machine Tilted" (Fig. A2-2).
- Move the translation control lever in the direction indicated by the white arrow and then in the direction indicated by the black arrow.
  > Result: the translation function should not be activated in any direction.
- Lower the lifting platform and remove the two wooden chocks.

Restricted translation speed

- Press the high speed or slow speed lifting confirmation button.
- Hold down the function confirmation switch.
- Raise the lifting platform to approx. 1.2m above the ground
  > Result: the anti-pothole protection systems should deploy.
- Hold down the function confirmation switch.
- Slowly move the control lever to the maximum translation position.
  > Result: the maximum translation speed that can be achieved with the lifting platform raised should not exceed 22 cm/s.
- If the translation speed is more than 22 cm/s when the lifting platform is raised, place a sign immediately on the machine and put it out of service.

https://truckmanualshub.com/

Pothole protection

Remark: the pothole protections must deploy automatically when the lifting platform is raised. These activate another limit switch that enables the machine to continue to function. If the pothole protections do not deploy, an alarm sounds and the machine does not operate any more.

- Raise the lifting platform.
  > Result: when the lifting platform is approx. 1.2 m from the ground, the pothole protections must deploy.
- Press on the protections from one side and then the other.
  > Result: the protections must not move.
- Lower the lifting platform.
  > Result: the protections must fold back.
- Place a 5 x 10 cm wooden wedge or a similar object under a pothole protection. Raise the lifting platform.
  > Result: an alarm should sound and the translation function should be deactivated before the lifting platform is 2.1m from the ground.
  The control screen in the basket should show "PHS" and the control screen at ground level should show "PHS: Pothole Guard Stuck" (the protective device against potholes is jammed) (Fig. A2-3).
- Lower the lifting platform and remove the wooden wedge.

A2-3

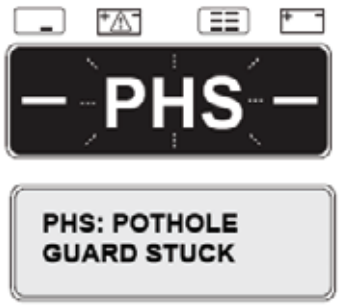

https://truckmanualshub.com/

- CHECKING THE BASKET CONTROLS (MODEL 2):

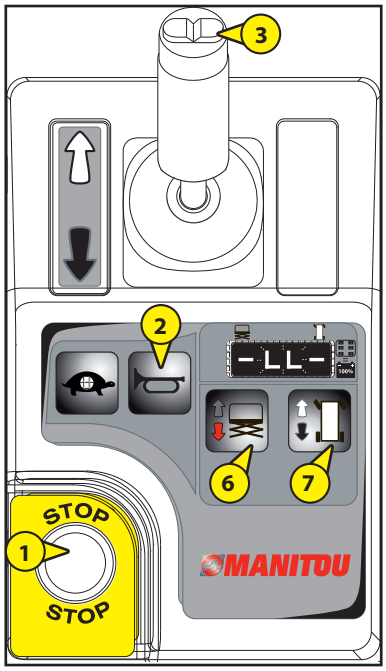

Emergency Stop (1)

- Push the lifting platform's red Emergency Stop knob to the OFF position.
  > Result: no function should be active.

Buzzer (2)

- Pull the red Emergency Stop knob to the ON position.
- Press the buzzer button.
  > Result: the buzzer should sound.

Function validation switch (3)

- Do not hold the control lever's function validation switch.
- Slowly move the control lever in the direction indicated by the black arrow.
  > Result: no function should be active.

Lifting /descent functions (6)

- Press the lift function button.
- Wait seven seconds for the lift function to time out.
- Slowly move the control handle in the direction indicated by the white arrow, then in the direction indicated by the black arrow.
  > Result : The lift function should not operate.
- Press the lift function button.
- Press and hold the function enable switch on the control handle. Slowly move the control handle in the direction indicated by the white arrow.
  > Result : The platform should raise. The pothole guards should deploy.
- Release the control handle.
  > Result : The platform should stop raising.
- Press and hold the function enable switch on the control handle. Slowly move the control handle in the direction indicated by the black arrow.
  > Result : The platform should lower. The descent alarm should flash and sound while the platform is lowering.

Drive function switch (7)

Remark: when testing the translation and steering functions, stand in the lifting platform and turn in the directions in which the machine is moving.

- Press the drive function button.
- Wait seven seconds for the drive function to time out.
- Slowly move the control handle in the direction indicated by the black arrow, then in the direction indicated by the white arrow.
  > Result : No functions should operate.

Steering

Remark: when testing the translation and steering functions, stand in the lifting platform and turn in the directions in which the machine is moving.

- Press the drive function button.
- Push the thumb switch on the top left of the control lever:
  > Result: the steered wheels should turn in the left-hand direction:
- Push the thumb switch in the right-hand direction:
  > Result: the steered wheels should turn in the right-hand direction.

Translation and braking

- Press the drive function button.
- Slowly move the control lever in the direction indicated by the white arrow on the control panel until the machine starts to move; then return the lever to the central position.
  > Result: the machine should move in the direction indicated by the white arrow on the control panel, then stop suddenly.
- Slowly move the control lever in the direction indicated by the black arrow on the control panel until the machine starts to move; then return the lever to the central position.
  > Result: the machine should move in the direction indicated by the black arrow on the control panel, then stop suddenly.

Remark: the brakes should be capable of holding the machine on any slope that it is able to cross.

https://truckmanualshub.com/

Tilt sensor

Remark: perform this test on the ground using the lifting platform controller. Do not remain in the lifting platform.

- Lower the lifting platform completely.
- Set a 5 x 10cm wooden chick or a similar item in front of both wheels on the same side and raise the machine onto them.
- Raise the basket approx. 2.1m above the ground.
  > Result: the lifting platform should stop rising and the tilt alarm should sound at 180 beeps per minute. The lifting platform's LED control screen should show "LL" and the liquid crystal control screen at ground level should show "LL: Machine Tilted" (Fig. A2-2).
- Press the drive function button.
- Move the translation control lever in the direction indicated by the white arrow and then in the direction indicated by the black arrow.
  > Result: the translation function should not be activated in any direction.
- Lower the lifting platform and remove the two wooden chocks.

Restricted translation speed

- Press the high speed or slow speed lifting confirmation button.
- Hold down the function confirmation switch.
- Raise the lifting platform to approx. 1.2m above the ground
  > Result: the anti-pothole protection systems should deploy.
- Press the drive function button.
- Slowly move the control lever to the maximum translation position.
  > Result: the maximum translation speed that can be achieved with the lifting platform raised should not exceed 22 cm/s.
- If the translation speed is more than 22 cm/s when the lifting platform is raised, place a sign immediately on the machine and put it out of service.

Pothole protection

Remark: the pothole protections must deploy automatically when the lifting platform is raised. These activate another limit switch that enables the machine to continue to function. If the pothole protections do not deploy, an alarm sounds and the machine does not operate any more.

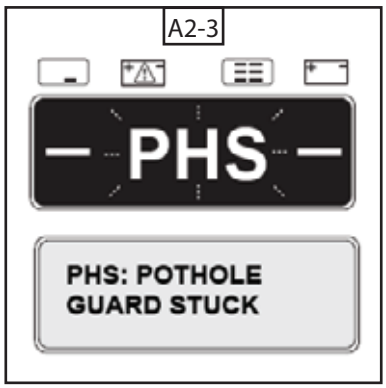

- Raise the lifting platform.
  > Result: when the lifting platform is approx. 1.2 m from the ground, the pothole protections must deploy.
- Press on the protections from one side and then the other.
  > Result: the protections must not move.
- Lower the lifting platform.
  > Result: the protections must fold back.
- Place a 5 x 10 cm wooden wedge or a similar object under a pothole protection. Raise the lifting platform.
  > Result: the light should flash, an alarm should sound and the translation function should be deactivated before the lifting platform is 2.1m from the ground.
  The control screen in the basket should show "PHS" and the control screen at ground level should show "PHS: Pothole Guard Stuck" (the protective device against potholes is jammed) (Fig. A2-3).
- Lower the lifting platform and remove the wooden wedge.

https://truckmanualshub.com/

A3 - Condition of the joystick bellows

CHECK

- For this operation, climb into the basket with the engine switched off.
- Check the rubber joystick bellows are in good condition, by acting as if you were making a movement.
- The bellows must not show any crazing, cracks, risks of water penetration detracting from the machine's correct operation.

A4 - Condition of the wheels and tyres

CHECK

- Check the condition of the tyres to detect any cuts, tears, protuberances, wear, etc... in the tyres.

A5 - Tightness of the wheel nuts

CHECK

- Check the tightness of the wheel nuts.

Failure to follow this instruction may lead to deterioration and breaking of the wheel pins and to deformation of the wheels.

A6 - Hydraulic oil level

CHECK

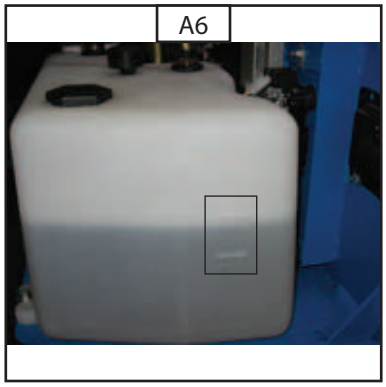

- It is essential to maintain a correct level of hydraulic oil for the machine to operate correctly. The wrong level of hydraulic oil can damage the hydraulic components. Daily checks enable you to note any change in the oil level that may indicate the presence of problems in the hydraulic system.
- Remark: perform this procedure with the lifting platform in the folded position and the engine switched off.
- Visually inspect the sight glass located on the side of the hydraulic oil reservoir.
- Result: the hydraulic oil level must be at least 5 cm from the upper mark.
- Add oil if necessary.

https://truckmanualshub.com/

B - EVERY 50 HOURS OF OPERATION

Perform the operations described above as well as the following operations.

B1 - Battery electrolyte level

CHECK

- Check the electrolyte level in each element of the battery.
- Ensure that every electrolyte level is at the bottom of the ventilation well (Fig. B1-1)
- If the ambient temperature is high, check the level more often than every 50 hours of operation.

Manipulating and maintaining a battery can be dangerous; take the following precautions:
- Wear protective goggles.
- Wear gloves
- Keep the battery horizontal when manipulating it.
- Never smoke or work close to a naked flame.
- Work in a sufficiently well-ventilated area.
- If any electrolyte splashes onto your skin, thoroughly rinse the area with cold water for 15 minutes and call a doctor.

- Battery level indicator: use the Diagnostic LED to determine the level in the batteries (Fig. B1-2).
- Remarks: when the code "LO" flashes on the lifting platform's LED control screen, put the machine out of service and charge the batteries; otherwise all the machine's functions will be deactivated.

B1-1

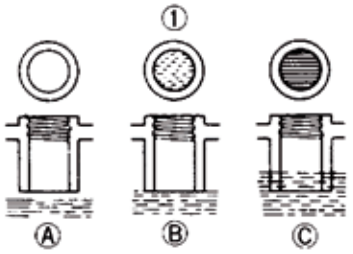

(1) Battery electrolyte level
(A) Too low - (B) Moderate
(C) Too high

B1-2

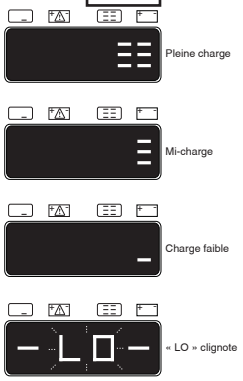

B2 - Steering pivot axes

GREASE

- Clean, then grease the grease points Rep.1 (Fig.2), (See chapter "LUBRICANTS") and remove any surplus.

B2

https://truckmanualshub.com/

C - EVERY 250 HOURS OF OPERATION

Perform the operations described above as well as the following operations.

C1 - Battery electrolyte density

CHECK

- There are two types of batteries: refillable and non-refillable (sealed).
- To use batteries of the refillable type, follow the instructions below.
- Do not use or charge the battery if the level of fluid in it is below the Low mark. Otherwise, there is the risk of damaging the elements in the battery and shortening the battery's service life or causing an explosion. Add distilled water immediately until the fluid level in the battery is between the High and Low marks.
- Ensure that the level of fluid in each cell is at the bottom of the ventilation well (Fig. C1-1): the density of the electrolyte varies according to the temperature but a minimum level of 1270 at 16°C must be maintained.
- In the hatched area (Fig. C1-2), the battery has a normal charge level. Above this area, the battery must be recharged. The density must not vary by 0.0025 units from one battery element to another.
- Recharge the battery and wait 1 hour before checking the electrolyte density in each battery element with an acidometer.
- Never check just after adding distilled water.

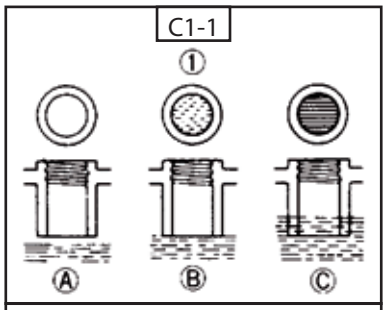

(1) Battery electrolyte level
(A) Too low - (B) Moderate
(C) Too high

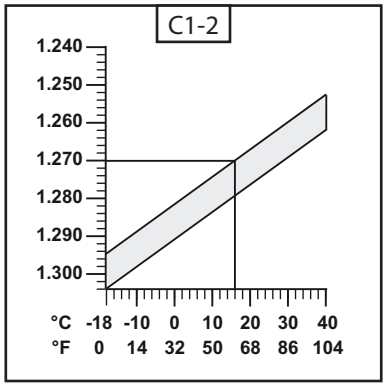

Manipulating and maintaining a battery can be dangerous; take the following precautions:
- Wear protective goggles.
- Wear gloves
- Keep the battery horizontal when manipulating it.
- Never smoke or work close to a naked flame.
- Work in a sufficiently well-ventilated area.
- If any electrolyte splashes onto your skin, thoroughly rinse the area with cold water for 15 minutes and call a doctor.

C2 - Overload sensors

CHECK

The pressure sensor (Fig. C2-1, ref 1) located on the lifting cylinder, is used to determine the overload pressure.

The maximum height limit switch (Fig. C2-1, ref. 2), located in the middle of the chassis, is used to put the scissors lifting coil out of service.

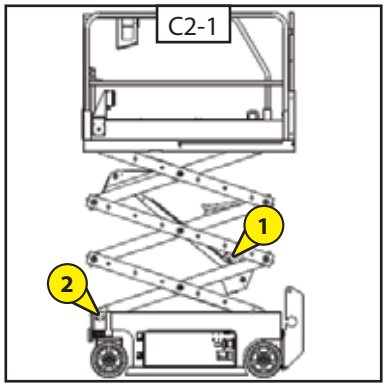

Lifting platforms 78 SEC 2 - 100 SEC 2:
- Set a load of 250 kg in the basket.
- Raise the basket. When the lifting platform is 1.50m from the ground, an alarm should sound and the screen should display OVERLOAD (Fig. C2-2).
- If the alarm does not sound, please refer to the sensor settings in the repairs manual.

Lifting platform 120 SE 2:
- Set a load of 360 kg in the basket.
- Raise the basket. When the lifting platform is 1.50m from the ground, an alarm should sound and the screen should display OVERLOAD (Fig. C2-2).
- If the alarm does not sound, please refer to the sensor settings in the repairs manual.

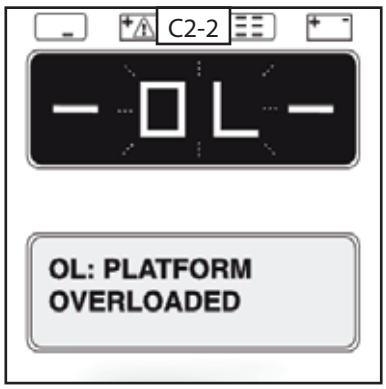

https://truckmanualshub.com/

C3 - Tightness of the translation motor fixing bolts

CHECK

- Check the tightness of the wheel translation motors on the chassis.

C4 - Machine stickers

CHECK

- Check the presence of the safety stickers (see: 1 -SAFETY STICKERS).

C5 - Snifter cap

CHECK

- The hydraulic reservoir is a ventilated reservoir fitted with a snifter, 1 (Fig. C5), which can block or deteriorate.
- If the snifter is defective, impurities can enter the hydraulic circuit and cause damage to the components.
- If the lifting platform is being used in a dirty environment, inspect the snifter more often.
- Install the new snifter on the reservoir.

C5

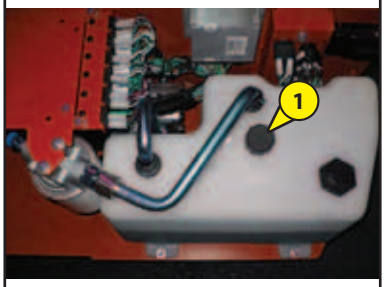

https://truckmanualshub.com/

C6 - Overload

CHECK

- The overload must activate at between 1.1 and 1.2 times the nominal load (see CHAPTER 2 - General characteristics).

Expected result:

- 78/100 SEC-2 > Nominal load 227 Kg: activation load between 249 kg and 272 kg
- 120 SE-2 > Nominal load 318 Kg: activation load between 349 kg and 381 kg

- The overload sensors must activate at the same time.

Refer to the repair manual for information about adjusting the overload

In the case of malfunction, forbid usage of the nacelle. Consult your dealership.

C7 - Stopping distance

CHECK

Proper brake action is essential to safe machine operation. The drive brake function should operate smoothly, free of hesitation, jerking and unusual noise. Hydraulically-released individual wheel brakes can appear to operate normally when they are actually not fully operational.

- Mark a test line on the ground for reference.
- Start the engine from platform controls.
- Choose a point on the machine; i.e., contact patch of a tire, as a visual reference for use when crossing the test line.
- Bring the machine to maximum drive speed before reaching the start line. Release the function enable switch on the joystick or release the joystick when your reference point on the machine crosses the test line.
- Measure the distance between the test line and your machine reference point.

Expected result:

On horizontal ground	Stopping distance
Transport speed	610 mm +/- 300 mm

Check brake holding on a slope

- The brakes must be able to hold the machine on any slope it is able to climb.

https://truckmanualshub.com/

D - EVERY 500 HOURS OF OPERATION

Perform the operations described above as well as the following operations.

D1 - Hydraulic oil

DRAIN - REPLACE

- Before draining the reservoir, the lifting platform must be set to transport position.
- Open the hydraulics box located on the side of the base console.
- Identify and then disconnect the hydraulic filter hose 1 (Fig. D1) from the hydraulic reservoir.
- Identify and then disconnect the hydraulic pump inlet hose 2 (Fig. D1).
- Remove the hydraulic reservoir after unscrewing its fasteners 3 (Fig. D1).
- Drain away all the oil into an appropriate container.
- Clean away the residual oil.
- Clean the interior of the hydraulic reservoir, using a gentle solvent.
- Leave the reservoir to dry completely.
- Place the hydraulic reservoir in its housing and then fasten the hoses onto the reservoir.
- Fill the hydraulic oil reservoir as full as possible
- Perform a lifting movement to fill the hydraulic system.

The pump can be damaged if it runs without oil

D1

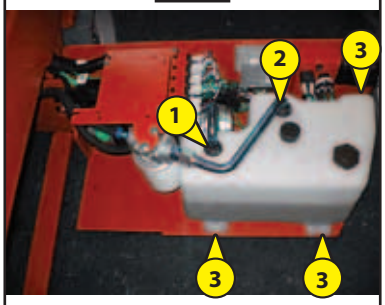

D2

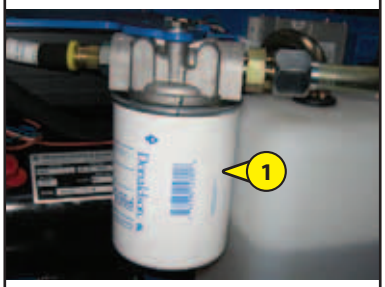

D2 - Hydraulic oil filter cartridge

DRAIN - REPLACE

- Locate the return filter in the compartment in the hydraulics box 1 (Fig. D2).
- Clean the filter environment before removing it
- Loosen the filter cartridge
- Apply to the filter seal before installing it in its housing.
- Firmly tighten the filter by hand.
- Use a permanent ink marker to write the date and the number of operating hours on the filter.
- Raise the scissors before inspecting the filter and the attached components to ensure that there are no leaks.
- Clean away the residual oil.

https://truckmanualshub.com/

E1 - Movement speeds (*)

CHECK

E2 - Condition of the flexible tubing and rubber hoses

CHECK

- Check the apparent condition (crazing) of the hoses subject to UV and thermal stresses; their technical characteristics may have been altered (porous spots).

PAY ATTENTION TO ANY LEAKS

Hydraulic oil escaping under high pressure can penetrate the skin and cause severe injuries. If you are injured by a jet of high-pressure oil, contact a doctor immediately.

If you think there may be a leak, do not look for it with your hand; check with a piece of cardboard, while protecting your hands and your body.

For your safety's sake, replace the worn hoses.

E3 - Condition of the cylinders (leaks, cylinder rods)

CHECK

- Check the condition of the cylinders. There must not be any:
  - Hydraulic leaks from the seals and the valve blocks
  - Impacts on and around the cylinder rods

E4 - Condition of the cables and cable bundles

CHECK

- Check that the Earth loop is present under the chassis and its condition.
- Inspect the following sectors while checking the state of the bundles: no deterioration or looseness:
  - Base control console,
  - Hydraulic power unit module plate,
  - Battery,
  - Scissors,
  - Basket control console.
- Check that there is electrical grease in the following locations:
  - Between the ECM and the basket console
  - All the connectors
  - The tilt

E5 - Scissors skid

CHECK

- Measure the distance between the lower tube on the scissors and the chassis (Fig. E5-1 and E5-2)
  > Result for 78 SEC : equal to or greater than 22.9 mm. If the result is lower, replace the skids.
  > Result for 100 SEC - 120 SE : equal to or greater than 22.4 mm. If the result is lower, replace the skids.

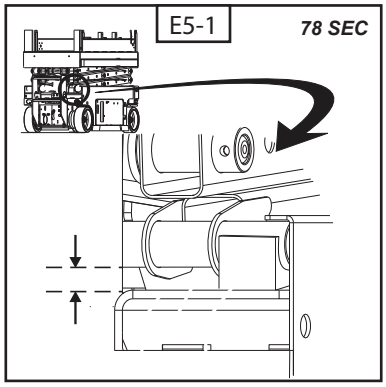

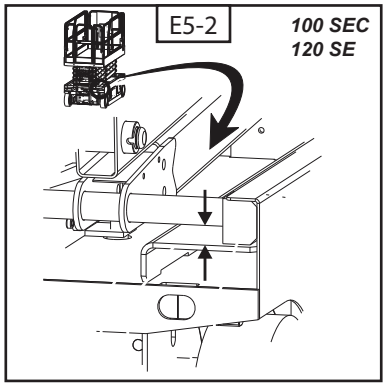

E6 - Translation motor

CHECK

- Check that there are no oil leaks from the translation motor.

*(Contact your dealer)

https://truckmanualshub.com/

F - EVERY 2000 HOURS OF OPERATION

Perform the operations described above as well as the following operations.

F1 - Hydraulic circuit pressures (*)

CHECK

F2 - Hydraulic circuit flows (*)

CHECK

*(Contact your dealer)

https://truckmanualshub.com/

G - EVERY 4000 HOURS OF OPERATION

Perform the operations described above as well as the following operations.

G1 - Disc brake wear (*)

CHECK

*(Contact your dealer)

https://truckmanualshub.com/

H1 - Wheels

CHANGE

- Stop the lifting platform on a firm horizontal surface, if possible.
- Proceed to switch off the lifting platform (see: 1 - SAFETY INSTRUCTIONS AND ADVICE: INSTRUCTIONS ON DRIVING LADEN AND UNLADEN).
- Place chocks under the lifting platform in both directions.
- Loosen the wheel nuts fully and remove them.
- Free the wheel by tugging it from one side and then the other and roll it off to one side.
- Slide the new wheel onto the hub.
- Screw on the nuts by hand.
- Tighten the nuts with a torque wrench.

H2 - Replacing the batteries

REPLACE

When the batteries must be replaced, it is essential to use batteries of the same capacity and weight as the original batteries to ensure the machine's stability.

Do not use batteries with a lower weight than the original ones. The batteries serve as a counterweight and are essential to the machine's stability. Each battery must weigh 29.5 kg. Each battery tray must weigh at least 152 kg (including the batteries).

PRECAUTIONS :
- Keep the battery upright when lifting it.
- Ensure that the slings are kept apart from each other to avoid a short-circuit.
- Ensure that the batteries are correctly positioned on the lifting platform.

https://truckmanualshub.com/

H3 - Fitting slings on the lifting platform

- Keep in mind the position of the lifting platform's centre of gravity for lifting it.
- Insert hooks in the anchoring points provided for this purpose.
- Lower the lifting platform completely. Ensure that the extension, the controls and the cowls are all secured. Remove any elements not fastened to the machine.
- Determine the machine's centre of gravity using the table and the illustration on this page.
- Attach the tying elements only to the lifting points specified on the machine.
- Adjust the assembly to avoid damaging the machine and to keep it level.

Centre of gravity	***Axis X***	***Axis Y***
78 SEC	50,8 cm	49,5 cm
100 SEC	82,2 cm	59,3 cm
120 SE	83,7 cm	59,9 cm

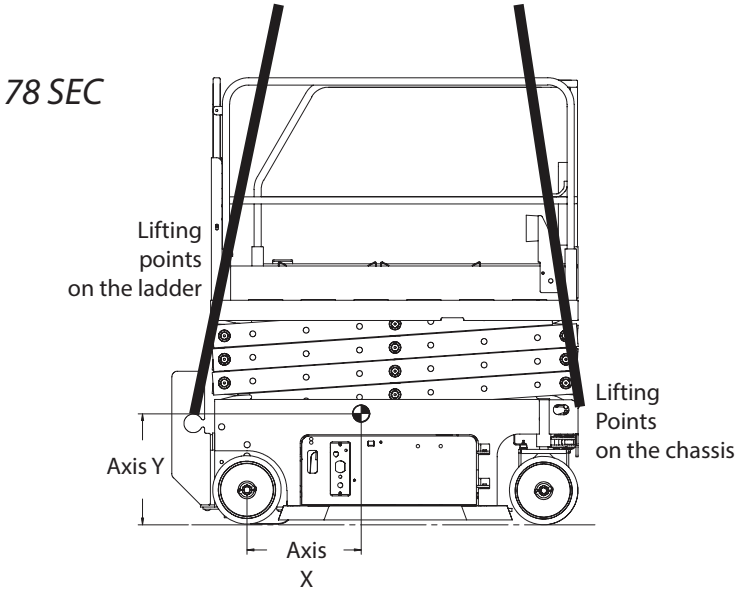

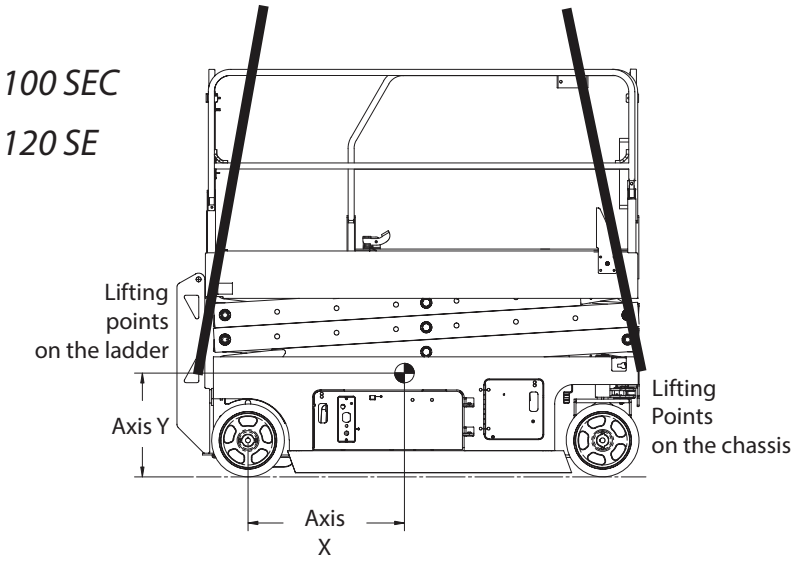

https://truckmanualshub.com/

H4 - Lifting the machine with a forklift truck

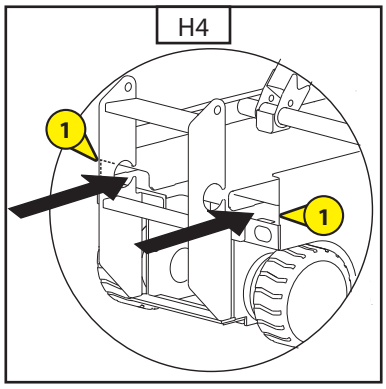

- Ensure that the extension, the controls and the supports for the lifting platform's components are secured. Remove any elements not fastened to the machine.
- The lifting platform must be in transport position throughout all the loading and transport operations.
- Use the slots for the forks on both sides of the ladder 1 (Fig. H4).
- Place the lift truck's forks in position over the fork slots.
- Move the machine forwards up to the end of the forks.
- Raise the machine 15 cm and then tilt the forks slightly backwards so that the machine remains stable.
- Ensure that the machine remains level when the forks are lowered.

https://truckmanualshub.com/