https://truckmanualshub.com/

Original instructions

OPERATION & SERVICE MANUAL

Three-wheel Electric Forklift Truck

CPDS15
CPDS18

KION Baoli (Jiangsu) Forklift Co., Ltd.

https://truckmanualshub.com/

OPERATION & SERVICE MANUAL

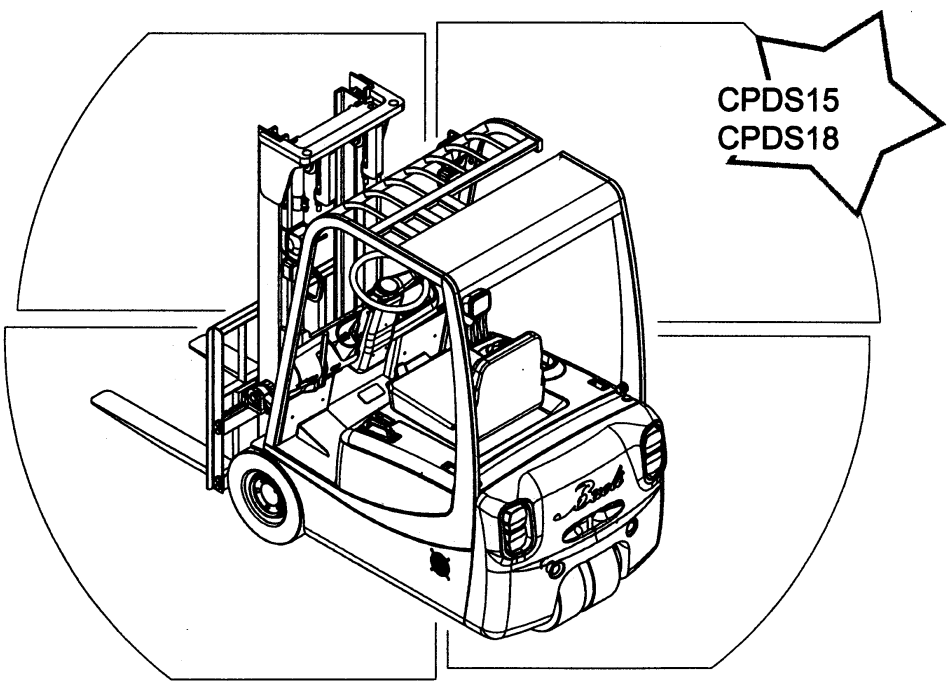

Three-wheel Electric Forklift Truck

KION Baoli (Jiangsu) Forklift Co., Ltd.

https://truckmanualshub.com/

PREFACE

Three-wheel electric forklift trucks are designed on the base of advantages of some trucks made by domestic and foreign manufactures and developed in introduced technology from abroad. These trucks are all suited for handling and stacking packed goods in stations, ports, goods yards and warehouses and used widely in food processing, light and textile, mining industries and other factories, with some of attachments fitted, the trucks can be applied more and more.

These forklift trucks feature a wide-vision mast, full powered steering unit, self-energizing brake, stepless speed control and high quality Italian AC system controllers, Italian drive unit (self-energizing brake), multi-functional LCD instruments, importing components as hydraulic AC motor with temperature and speed sensor and towing AC motor, so they have a lot of advantages such as good performance, easy operation, wide vision, flexible steering, reliable braking, powerful, low noise, no contamination and aesthetic appearance.

This manual states the forklift truck's specifications, operation, maintenance, main assemblies' constructions and working principles so as to help operators to use the trucks correctly and attain the highest functions. It is necessary to read over the manual before operating or maintaining the forklift trucks. The rules and notices in this manual should be abided seriously by all relative personnel to enable these trucks in optimized working state for long period and bring the highest efficiency.

The partial content in this manual might not correspond with the actual condition because of technical improvement. Our products are subject to improvements and changes without notice.

https://truckmanualshub.com/

CONTENTS

Ⅰ. External view and main specification..... 1

Ⅱ. Safety instruction, operation & maintenance of electric forklift truck... 3

2.1 Shipping, loading, unloading and slinging..... 3

2.2 Storage of forklift truck..... 4

2.3 Precautions before operation..... 4

2.4 Information of safety operation..... 4

2.5 Periodic servicing and maintenance of electric forklift truck..... 8

2.6 Brief operation instruction..... 11

2.7 Caution plates..... 14

Ⅲ. Construction, principle, adjustment and maintenance of forklift truck... 20

1. Transmission system..... 20

1.1 General description..... 20

1.2 Disassembly of drive system..... 22

1.3 Assembly of drive system..... 23

1.4 Replenishing with gear oil..... 25

2. Brake system..... 26

2.1 General description..... 26

2.2 Maintenance and adjustment of brake system..... 29

3. Steering system..... 31

3.1 General description..... 31

3.2 Adjustment and maintenance..... 36

4. Electric system..... 37

4.1 General description..... 37

4.2 SME compact meter..... 39

4.3 SME AC electric control assy..... 43

4.4 Distribution and setting of sensor..... 44

4.5 AC microtron..... 46

https://truckmanualshub.com/

5. SME three-phase AC motor..... 48
5.1 General description..... 48
5.2 Operating environment..... 48
5.3 Daily inspection and maintenance..... 48
6. Battery and charger..... 49
6.1 Structure of battery..... 49
6.2 Specification of battery..... 49
6.3 Usage and maintenance of battery..... 49
6.4 Troubleshooting..... 54
6.5 Charger..... 55
7. Hydraulic system..... 58
7.1 General description..... 58
7.2 Maintenance and adjustment of hydraulic system..... 69
8. Mast system..... 74
8.1 General description..... 74
8.2 Maintenance and adjustment of mast system..... 77
Charging record card of electric forklift truck..... 80
NOTE..... 81
EC DECLARATION OF CONFORMITY 82

Ⅰ. External view and technical parameter

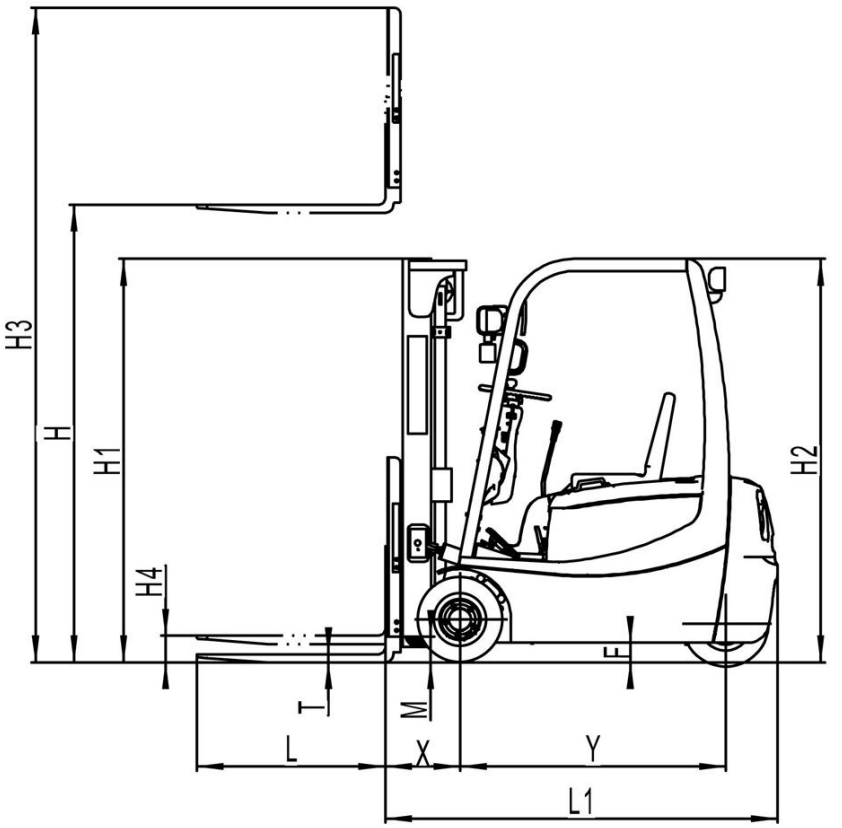

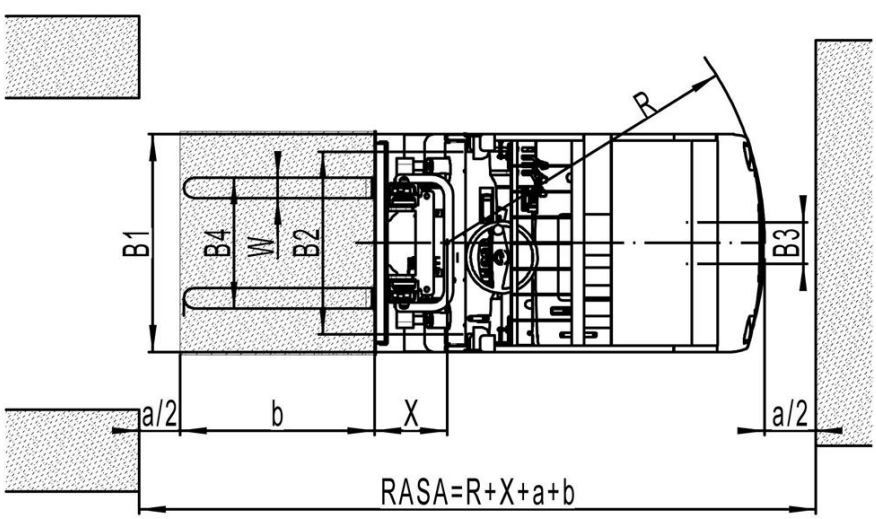

RASA: Right-Angle Store Aisle

a: Clearance b: Length of load

External view of three-wheel electric forklift truck

Technical parameter

General	Model				CPDS15	CPDS18
	Rated capacity			kg	1500	1750
	Load center			mm	500	
	Power type				Battery	
	Tyre				Super elastic solid tyre	
	No. of tyre(front/rear)				2 / 2	
Dimension	Lift height		H	mm	3000	3000
	Free lift height		H4	mm	130	130
	Fork size		L×W×T	mm	920×100×40	
	Mast tilt angle (forward/backward)		α/β	deg	5 / 7	
	Overall dimension	Length to fork face	L1	mm	1860	1910
		Overall width	B1	mm	1070	
		Mast lowered height	H1	mm	1980	
		Mast extended height	H3	mm	3945	
		Overhead guard height	H2	mm	1990	
	Turning radius		R	mm	1500	
	Front overhang		X	mm	360	
	Min. right angle stacking aisle width (pallet 800×1200,1000×1200)		RASA	mm	2860/3060	2910/3110
Performance	Full load /no load	Travel speed		km/h	14/15.5	13.5/15
		Lifting speed		mm/sec	300/470	
	Grade ability(full load)			%	20	
	Service weight (including battery)			kg	3100	3260
	Max. pulling force			KN	14.5	13
Chassis	Tyre	Front			18×7-8 PR	
		Rear			16×6-8 PR	
	Tread	Front	B2	mm	895	
		Rear	B3	mm	205	
	Wheel base		Y	mm	1295	
	Min. ground clearance (full load/no load)	Mast	M	mm	80/85	75/85
		Frame	F	mm	100/110	
Power & Control	Battery	Type			Lead-acid plates	
		Voltage		V	48	
		Capacity		Ah	505	
	motor	Drive motor		Kw/rpm	2×6.5/1500	
		Hydraulic motor		Kw/rpm	12/2200	
	Controller				Italian SME AC Controllers	

Ⅱ. Safety instruction, operation & maintenance of electric forklift truck

It is important for drivers and managers to remember the principle of “safety first” and ensure the safety operation as the description of Operation & Service Manual. Please read this manual thoroughly. This will give you a complete understanding of Baoli forklifts and permit you to operate them correctly and safely.

2.1 Shipping, loading, unloading and slinging

2.1.1 Ship the forklift truck

(1) Apply the parking brake when shipping the forklift trucks by container or freight car.

(2) Fix the mast and the balance weight with steel wire and use jacks to prevent the forklift trucks from moving in the cabin.

(3) Pay attention to the overall length, width, height when loading, unloading and shipping and conforming the regulations is necessary.

2.1.2 Load and unload the forklift truck

(1) Use the plate with enough length, width and strength.

(2) Pull the parking brake and use jacks to stop the wheel.

(3) Fasten the plate on the center of the cabin, there must be no grease on the plate.

(4) The left and right height of the plate must be equal to make the loading and unloading smooth.

(5) Don’t change the direction on the plate to prevent the danger.

(6) Reverse the truck slowly when loading the forklift truck on the freight car.

2.1.3 Sling the forklift truck

(1) Only the specially trained personnel can sling the truck.

(2) Sling points should be always at the positions specified in sling nameplate.

(3) The slinging cable must be enough to hang the forklift truck.

(4) Disassembled parts of forklift truck must be slung in the appointed position.

(5) Single transporting if necessary after disassembling the mast and balance weight.

Specification \ Model		Unit	CPDS15	CPDS18
Balance weight	Max. outline size	mm	362×810.5×1066	402×810.5×1066
	Slinging capacity	kg	>600	>800
Overhead guard	Max. outline size	mm	1066×1322×1550	1066×1322×1550
	Slinging capacity	kg	>100	>100
Mast (Lifting height 3000mm)	Max. outline size	mm	361×1066×2130	361×1066×2130
	Slinging capacity	kg	>600	>600

Notice:

Dismantling and slinging the component shall not be performed without the approval of our company. Under special circumstances, the appointed sling position should be used. The balance weight, fork and mast of the truck all have their appointed hang up position. The above – mentioned capacity is only for a reference, which may be adjusted because of configuration difference or technology optimization.

2.2 Storage of forklift truck

(1) Lower the mast to the lowest position.

(2) Turn off the key switch, place the levers in the neutral position. Disconnect the power plug.

(3) Apply the parking brake.

(4) Wedge up the front and rear wheels.

(5) If the truck leaves unused for long time, build the wheels on stilts. Charge the battery once a month.

2.3 Precautions before operation.

(1) Check all the instruments.

(2) Check the tyre inflation pressure.

(3) Check all the levers and pedals.

(4) Check if the voltage of the battery is in normal limit. Check if the density and level of the electrolyte is appropriate.

(5) Check for all the terminals and plugs.

(6) Check hydraulic oil, electrolyte and brake fluid for leakage.

(7) Check all connectors and fasteners for looseness.

(8) Check if all the lamps and signals are in normal state.

(9) Release the parking lever.

(10) Make trial of the mast for lifting and lowering, forward and backward tilting, and the truck for steering and braking.

(11) The contamination level of the hydraulic oil should be lower than grade 12.

2.4 Information of safety operation

(1) The forklift truck belongs to special equipment. Only trained and authorized operator shall be permitted to operate and service the truck.

(2) Wear the safety guards, such as clothing, shoes, helmet and gloves while operating the truck.

(3) When the distance between the gravity center of loads and the fork arms is 500mm, the max. capacity is the rated capacity. When the distance exceeds 500mm, the capacity shall be based on the load chart. Handle only loads within the allowable capacity of the truck. The goods handled should not exceed the rated capacity of the truck.

(4) Operate your truck on a hard ground. Operate on other ground, the lift capacity and travel speed must be decreased. Wipe off the oil and grease on the floor.

(5) Daily maintenance services should be done before or after using the truck. Anytime you find that the truck is not functioning normally, operation of the truck should be halted and check or repair at once.

(6) When operate one lever, don’t shift another lever. Don’t operate the lever at any position out of the driver seat.

(7) Don’t handle unfixed or loose goods. Be careful to handle bulky goods. To prevent the collapse of stacked goods, tighten them. Forbid loading loose or little volume goods without tray.

(8) If the truck is equipped with a load-handling attachment, its usage sphere will be wider, but its allowable load and stability is reduced. The attachment and special device is not to be diverted to any other purpose. It’s very dangerous to rebuild the attachment. Please read the additional instruction we supplied and operate the truck following it strictly.

(9) Fork can not be used to pull out any embedded goods, if necessary, the pulling force should be estimated.

(10) Insert forks deeply under goods. Adjust fork’s distance according to the dimension of goods. Make the loads distribute on the forks evenly to avoid tilt and slide of goods. Don’t pick the loads with one fork tip.

(11) When handling bulky loads which restrict your vision, operate the forklift truck in reverse or have a guide.

(12) When loading the goods, lower the forks to the floor. After the fork inserting stacked goods, the fork arms should be in contact with the goods. Drive the truck with mast tilting back for stabilizing the load. Before traveling, raise the forks for 200mm-300mm from the floor.

(13) While mast’s lifting and lowering, anyone is absolutely prohibited from standing under the lifting rack or being lifted with forks. Never permit anyone to stand or walk under upraised forks.

(14) When loading and unloading goods, keep the mast vertical and the truck is in braking state.

(15) Because the rear wheels steer your truck, the rear end swings wide when you turn. Use care in aisles and other tight places.

(16) During operation, pay attention to the performance and condition of machinery, hydraulic, electric and speed adjuster.

(17) Connect the power source, turn on the key switch, select the position of directional switch, check the truck for normal operation by turning steering wheel, depress the accelerator pedal softly to keep proper acceleration.

(18) When the voltage drops below 43.2V during operation with load, it's necessary to charge the battery or replace a full charged battery at once.

(19) The shift distance of control valve lever can control the speed of the lifting or descending of the goods. When the goods are lifted or descended, the initial speed shouldn't be too fast in either case.

(20) It is necessary to brake before tilting the mast forward or backward. It's also necessary to decelerate and tilt forward slowly so as to prevent the goods from slipping off the rack.

(21) Tilt the mast of the high lift forklift truck as backward as possible when the truck works. Use minimum forward and backward tilt when loading and unloading. It is dangerous to travel or turn at high levels.

(22) On the high lift forklift truck with lifting height more than 3m, it is noted that the goods on it will fall down, take the protection measures if necessary.

(23) The overhead guard is main part which is strong enough to meet safety standard, and protect the operator from falling materials. It's very dangerous to dismantle or rebuild the overhead guard, because these conditions could lead to an accident.

(24) A load backrest shall be used as protection against back falling objects on the fork. It's very dangerous to dismantle or rebuild the load backrest, because these conditions could lead to an accident.

(25) Load should be contacting with a load backrest. Do not handle the load which exceeds height of a backrest. When loads go over the load backrest, there is a danger of load's falling against operator.

(26) The stability of the truck is influenced by the wind-force during outside operation, you must notice specially.

(27) Be careful and slowly driving over a dock board or bridge-plate.

(28) When travel with load, don’t tilt mast forward, don’t do handling. Don’t brake abruptly to prevent the bulk from slipping off the forks.

(29) Drive the forklift truck to the stacked goods at a low speed, at the same time, pay much attention to sharp and hard objects which may prick the tyres.

(30) Pay attention to pedestrian, obstacle and bumpy road when driving. Pay attention to the clearance over the forklift truck.

(31) Keep your head, hands, arms, feet and legs within the confines of the operator’s compartment. Never allow other persons on the forklift truck.

(32) Crossing, turning and tilting shall not be taken on a slope. It could cause sideways turning of the truck, it is very dangerous. On a slope, drive the truck with load forward to ascend and backward to descend. When the truck goes down on a slope, drive slowly with the brakes on. Make sure that the engine should not be shut down when traveling on a slope.

(33) The starting, turning, driving, braking and stopping of the truck should be done smoothly. When steering on the humid or slippery road, the truck should be decelerated.

(34) When operating the truck, avoid sudden stop, acceleration, stop or turn. In the case of improper operation, the truck will turn over. In case of this, the driver must keep calm, don’t jump off the truck. The driver must hold tightly the steering wheel with two hands; meanwhile, his body must incline in opposite direction of truck’s turning over.

(35) The unloaded forklift truck with attachment should be operated as a loaded truck.

(36) Check the chains periodically to make sure that good lubrication condition exists between the chain elements, the degree of tightness between left and right chain is identical. When there is damage on the chain during operation, if the variation value of the chain pitch exceeds 2% of standard value, it indicates that the chains have been worn excessively and they must be replaced immediately.

(37) To ensure the safety of loading, don’t put the truck into reverse gear before it decelerating and stopping.

(38) Don’t make a sudden braking when the truck traveling with loads.

(39) When leaving, lower the forks on the ground and let the shift lever on neutral, cut down the electric supply. If parking on a slope is unavoidable, apply the parking brake and wedge the wheels specially stopping for long time.

(40) When tilting the mast forward or backward to the limit or lifting the fork to the maximum height, make the directional lever back to neutral position.

(41) Don’t adjust the control valve and relief valve at will to prevent the damage of

hydraulic system and its components because of excessive pressure passing them.

(42) According to the Directive 2000/14/EC and based on EN12053 standard，when the forklift truck during the test of lifting, traveling and idling, but the noise of the forklift truck may fluctuate due to different operation and the influence of the external environment.

(43) The driver feels the vibration of the forklift truck when operating and traveling the forklift truck. According to ISO3691 and based on EN13059 standard. The vibration of the forklift truck fluctuates according to environment condition. In normal working condition, the vertical direction acceleration mean value from the seat to the operator is referred to the following table. But the vibration frequency felt by the driver depends on the working condition (etc. road, operation method), so the actual vibration frequency must be determined according to environment condition when necessary.

Model	The noise pressure level at the operator's position	The vertical direction acceleration mean value from the seat to the operator
	EN 12053	EN 13059
CPDS15-18	78.9dB(A)	0.87(m/s^2)

(44) Users select "Lengthening fork" in order to carry widening loads. Pay much attention not to overload and observe the allowable load and the capacity chart on the truck. Careful driving should be taken when traveling and turning.

(45) When operating the machine, observe and follow all markings on the machine. The marking plates must be replaced if lost or damaged on time.

(46) The forklift truck must be used under the following environment: below an elevation of 1000 meters and temperature between -15℃and 35℃, relative humidity is 95%. Careful operation must observe under other adverse circumstances.

(47) To prevent the fire, accident or other unpredictable event, prepare the fire extinguisher in advance and operate it according to the instructions.

(48) You can't change or add other working equipments on the truck without our company's permit, or the rated capacity and safety operation will be affected.

(49) Check for the fastener of overhead guard, lift-descend device, adjust the roller clearance and do the lubrication maintenance, check the chain, pulley and do the lubrication maintenance, and lower the device to the lowest position. Please pay more regard to safety when maintaining the upper mentioned parts for that they are on high position.

2.5 Periodic servicing and maintenance of electric forklift truck

During operating the forklift truck, it is necessary to operate carefully, service and maintenance periodically to make the forklift truck keep in good condition.

2.5.1 Handling a new forklift

The performance and service life of forklift depends heavily upon the way you service it during the run-in period. Pay much attention in the period.

Replace gear oil in the differential and reducer after the new forklift working for 1000 hours, and then retighten all the tightness.

2.5.2 Cautions for starting

(1) The amount of hydraulic oil: The oil level should be at the middle position between the upper and lower scale marks of oil level meter.

(2) Check the pipes, joints, pumps and valves for leak and damage.

(3) Check the traveling brakes: The free stroke of brake pedal is 20-30 mm; when achieving effective brake, the clearance between the front floor and the pedal should be more than 20mm.

(4) Check the parking brake: The unload truck can park on stated ramp, when the parking lever is pulled to the bottom.

(5) Check the meters, lamps, connectors, switches and electric circuit if they are running properly.

2.5.3 Charging the battery

(1) Please refer to Manual of Battery about the initial charging and normal charging of the battery.

(2) When the truck working with load, the voltage of the battery reduces to 43.2V, or the voltage of each cell drops below 1.80V, the warner of battery capacity flashes, stop the truck until charge the battery or replace a full charged battery.

(3) Measure the density, level and temperature of the electrolyte.

(4) After the battery is used, it should be charged immediately, the time left idle of the battery must be less than 24 hours. You should try to prevent them from over being discharged or over charged. Either way will affect their service time and functions.

Refer to Manual of Battery about charging method and maintenance.

2.5.4 Essentials of servicing

(1) Some critical components must be replaced according to demands periodically. Use genuine parts supplied by our company only.

(2) Use the same type of oil only when replacing or adding.

(3) If any damage or fault is found, stop the truck and report the matter to the

serviceman. Only trained and authorized serviceman shall be permitted to service the truck. Do not operate the truck until the truck has been repaired completely.

(4) Maintain and service the motor, electric controller and battery separately according to their manuals.

(5) Check all plugs once a month.

(6) Don't wash the truck with a water syringe. Using the truck outside in rainy day is forbidden.

(7) Clean the dust of photoelectric coupler of the hydraulic motor switch.

(8) Clean and dry the surface of the battery usually.

(9) Periodic maintenance must be done according to the following list after using the forklift truck.

No.	Item	Contents	Period (hrs.)	Remark
1	Bearing, steering wheel	Replace grease	1000	
2	Parking brake lever	Add grease	200	
3	Pin, foot brake	Add grease	200	
4	Reduction box	Replace gear oil	2400	
5	Braking oil	Add	Whenever necessary	
6	Pin, tilting cylinder	Add lubricating grease	400	
7	Hydraulic oil tank and filter	Clean	1000	
8	Hydraulic oil	Replace	1000	
9	Lift chain	Replace	3000	If damaged, replace it.
10	H. P. hose	Replace	3000	
11	Switch, hydraulic motor	Clean photoelectric coupler	200	

Notice: When serving and checking the truck, do not use the mast or the load backrest as a ladder, these actions will lead to a danger unexpectedly.

2.5.5 Recommended oil and grease

Name	Brand or code		Amount	Remark
	Domestic	Overseas		
Hydraulic oil	HM32#(winter) or HM46#(summer)	ISOVG30	24L	To the dipstick level
Gear oil	GL-5 80W	SAE80W	0.55～0.65	To the oil level
Brake fluid	DOT3 Compound brake fluid		0.6L	
Lubricant grease	3# Lithium base grease (drop point 170)	JISK2220/2#	Right amount	

Adding oil, grease and brake fluid should follow relevant automobile standard. The waster of the forklift truck must be reclaimed obeying the relevant laws and regulations. Incorrect treatment will pollute water, soil and atmosphere etc. Wear safety guards such as helmet, safety shoes and working clothes to avoid directly contacting with body when adding oil, grease and brake fluid.

2.6 Brief operation instruction

2.6.1 Operation device and meter

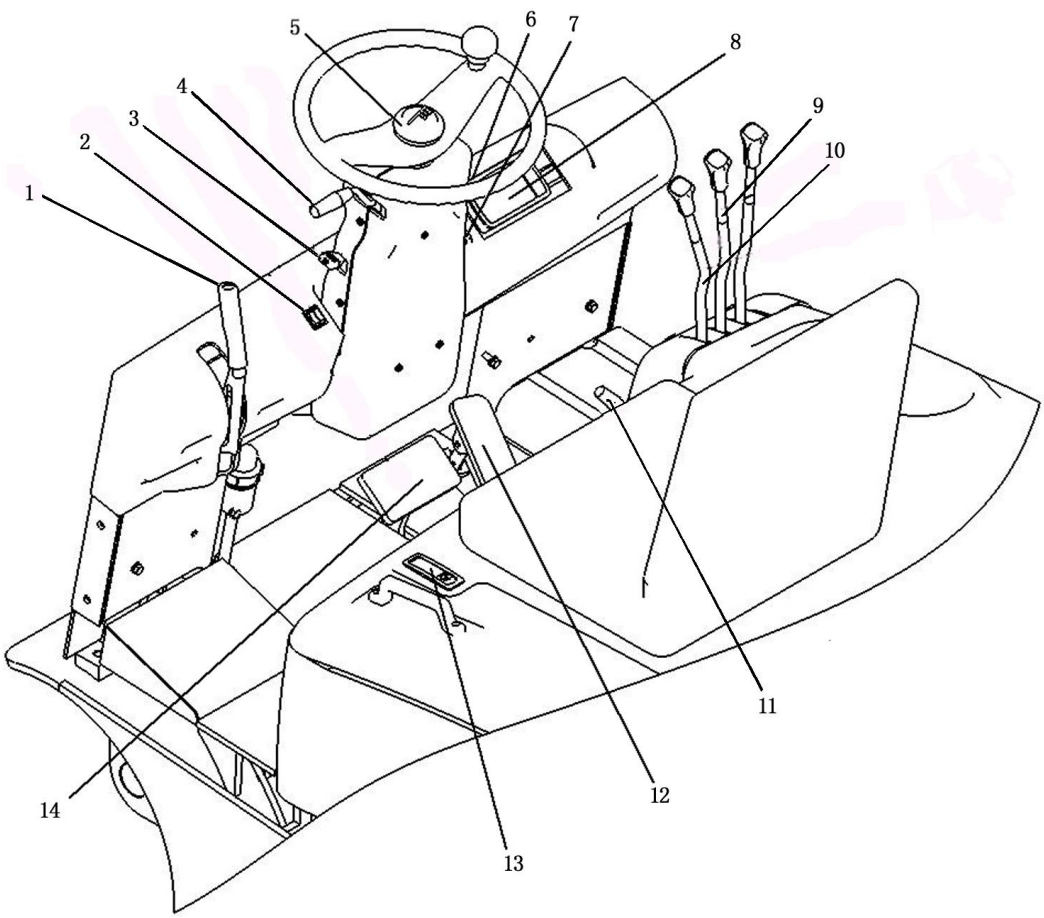

Function and working condition of operation device:

No.	Name	Function	Working condition
1	Parking brake	Park the truck.	Pull the lever backward fully.
2	Lamps switch	Control head combination lamp,	Push or pull the double-shift switch when lighting.
3	Adjust lever, hand	Adjust hand wheel's	
4	Shift lever	Change traveling direction.	Pull the lever forward, the truck travels forward.
5	Horn button	Control the horn.	The horn sounds when pressing the button.
6	Operating lever, turning lamps	Indicate turning direction.	Pull operating lever when turning.
7	Key switch	Control electrical system.	Connect the meter and power when turning right (shift I).
8	Meter panel	Refer to Chapter of Electric System in this manual.	
9	Operating lever, tilt cylinder	Operate tilt cylinder.	Tilt backward when pulling backward, it's forward
10	Operating lever, lift cylinder	Control lift cylinder.	Mast lifts when pulling backward, descends when
11	Seat adjust lever	Adjust seat position.	
12	Accelerator pedal	Control output voltage.	Press and accelerate.
13	Lock, battery cover	Lock the battery cover	Press the rear button of battery cover to open the lock
14	Foot brake pedal	Brake the truck.	Depress the pedal to brake.

2.6.2 Operating manual

(1) Start: Before starting, put the hand brake switch on the brake position, the shift direction switch and seat switch on neutral. If not, the safe circuit plays its part, and then the forklift truck can't start.

Turn the start switch (electric lock) clockwise to shift Ito turn on the power, meter indicator and electric control circuit, release the hand brake switch.

Push the shift direction switch forward, press down the accelerator pedal, then the truck goes forward. If pull the direction switch backward, the reverse lamps light and the back-up buzzers sound. If having operational errors or others, the meter will show different error codes, some common features as follows:

If pressing down the accelerator pedal first, then turning on the direction switch, the meter will show code 64 expressing start error.

When turning on the key switch, meter shows error code 50, it expresses that the lift is in the state of starting.

If "safe" indicates on the meter, seat switch may be on.

If the voltage of the battery is too low, the error code 12 will indicate.

The common error code 90, it shows failed steering sensor, which maybe have been

damaged or loosen.

(2) Light switch: There are two switches on the left side of the meter. Press the right switch, the front combination lamp lights; press the left switch, the rear combination lamp lights.

(3) Steering signal: Pull the steering lamp switch backward, the front lamp and rear up and down combination lamp turning signals on the left side of the truck light; pull the steering lamp switch forward, the front lamp and rear up and down combination lamp turning signals on the right light, and the corresponding steering lamps will flash.

(4) Brake signal: When braking, press down the brake pedal to turn on the rear combination brake lamps (red).

(5) Reverse signal: When reversing, pull the direction switch backward, then the travel motor reverses, rear combination reversing lamps (white) light and the back-up buzzers sound.

(6) Press E/S/H or tortoise key on the right of the meter, the operating mode and speed will be adjusted too.

2.6.3 Maintenance of control system

During using the electric forklift truck, it’s necessary to maintain the control system periodically as follows:

(1) Check the contact terminal for wear status and contactor if works freely. Check the contact point every three months.

(2) Check foot pedal or micro-switch of levers. Measure the voltage drop between the contact terminals with multimeter to make sure there is no resistance between terminals. Make sure that the sound of turning on or off the micro-switch is slivery. The inspections of micro-switch should be done every three months.

(3) Check the connecting lines of primary circuit and make sure good insulation and connecting tightness of cables of the battery, controller and motor. Check the cables every three months.

(4) Check the spring of foot pedal or levers, make sure the usual deformation and smoothly resiling of spring. Do the inspections every three months.

(5) Check if the contactor terminal is working freely and not felted. Do the inspections every three months.

Notice:

The controller needn’t be repaired by users, so don’t open it for it may be damaged and lose guarantee. Make the controller clean and dry, inspect and clear the diagnosis

history documents periodically. Never start the electric control of incorrectly-installing vehicles.

Only trained people can do periodic maintenance and replace the damage parts with genuine parts of controller. Use the genuine parts produced by our company for ensuring the quality.

During inspection, if there is status that may bring damage or cause dangerous, inform the agent immediately, they will make a decision of the operating security.

2.6.4 Particular notice

(1) As a special vehicle, electric forklift trucks need professional maintenance and authorized persons' driving to suit for the working environment, or errors will be shown in electric system (including meter).

(2) As the power of the vehicle, battery is different from traditional energy; its actual capacity is related to working state and aging, different from rated capacity. According to the common performance, when capacity drops to 20% (one cell), charge the battery to prolong the life of battery.

(3) Using PC machine or hand-hold device connecting with control device, the users can enter into software setting interface with powerful functions within certain limits. You can measure and know the working condition of truck more intuitively, for example as follows: working current and rotating speed of drive motor; working current, rotating speed, working hours and trouble list of lift motor, and other system parameters.

2.7 Caution plates

The caution plates attached on the vehicle indicates the operating method and instructions. Before driving it, please be sure to read them thoroughly. If the caution plate drops, stick it again. When maintaining, check if the caution plate is complete and the writing is legible, if necessary, please replace them.

(1) Safety mark

People are forbidden to stand on or down the fork.

(2) General information when operating

(3) Nameplate of forklift truck

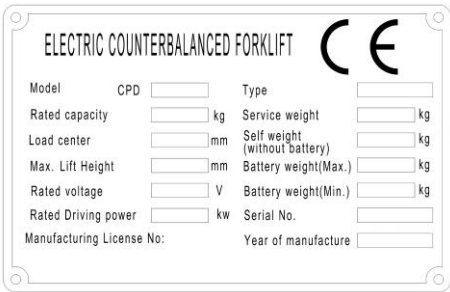

(4) Lubrication system

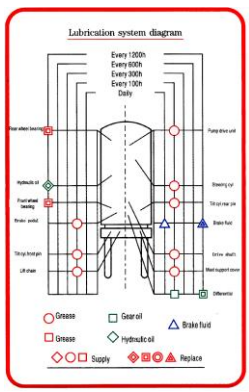

(5) Capacity chart

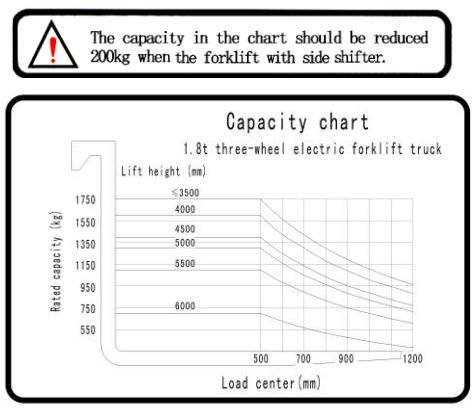

(6) Inspections before starting

Inspections before starting

Do inspections before starting the truck:
1. Hydraulic oil level: The liquid level should be in the middle position of up and down marks of oil level indicator;
2. Check the pipes, joints and pump valves for leakage and damage;
3. Check the driving brake:
(1) The virtual travel of brake pedal should be between 20-30mm;
(2) The clearance between front backing plate and pedal should be larger than 20mm;
4. Check the parking brake frequently and make sure that the truck with full load can stop on the ramp with 15% slope when pulling the lever to the bottom;
5. Check if meters, lamps, switches and electronic wirings are working normally.

(7) Add hydraulic oil

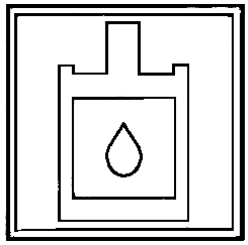

(8) Sling decal

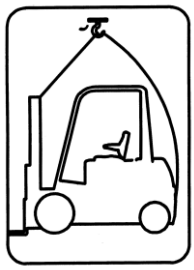

(9) Sling point indication

(10) Forbid entering into the rear space of the mast

(11) Hand caution decal

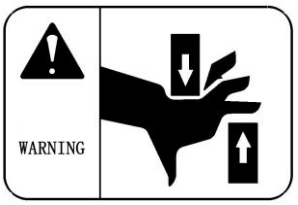

(12) Forbid conveying person

(13) Routine battery use

ROUTINE BATTERY USE

1. Limiting appropriate distilled water or diluted vitriol slowly while replenishing electrolyte.The electrolyte level must be proper. The level exceeding is prohibited.
2. Open all lids of the battery and keep ventilation when charging.
3. Keep all lids close to avoid electrolyte splashing while using battery.
4. While changing battery,keep the battery box verticaly, and lower it slowly to avoid electrolyte overflowing.
5. Clean the battery bracket regularly to avoid that the bracket is corrupted by electrolyte.

(14) Routine battery maintenance

ROUTINE BATTERY MAINTENANCE

1. Be sure the battery voltage not less than 85% of the rated voltage while using.
2. The battery should be recharged within 24 hours. Never overcharge the battery during charging it.
3. Replenishing distilled water regularly to keep the electrolyte level normal.
4. If the battery is not in use for a long time. Please remember to recharge it once a month.
5. The battery temperature exceeding 55℃ is strictly prohibited. keep away from flame to avoid explosion.
6. Keep the battery surface dry and clean.

(15) Faulty starting decal (electric forklift truck witch DC motor)

STARTING POINTS FOR ATTENTION

1. According to the operating order of electric forklift truck,adjust the sitting positin,make sure the seat electric lock closed,turn on the key switch for several seconds,after the main contactor is attracted,then turn on the direction switch and press the accelerator pedal slowly.
2. If the operating order is wrong,the meter will indicate the corresponding error code,such as 01,02,03,06,11,51,etc. Generally, you can replace the faulty operation. If error code 51 indicates on the meter,turn off the key for several seconds and then restart, or turn off the seat switch for several seconds, then it will return to normal.

(16) Overturn caution decal

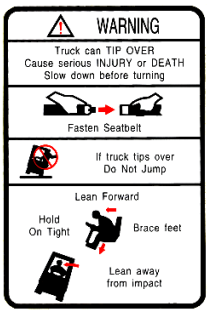

https://truckmanualshub.com/

Ⅲ. Construction, principle, adjustment and maintenance of forklift trucks

1. Drive system

1.1 General description

The drive system consists of general transmission system and partial brake system. With the front wheel duplex motor driving construction, the right and left front wheel separately contain drive axle, transmission case, brake unit and drive motor, which improves the working efficiency. The reducer and the brake unit assembled in the drive axle housing forms a unit.

The travel speed of the truck is increased with the speed of traveling motor, while the travel direction changes with the rotation direction of traveling motor. The sensor assembled on the rear wheel sends the information to the controller which controls the driving motor on the front wheels, with the different information accepted, the driving motor transfers the different rotation, then the truck can be turned. The steering of the front wheel is come out by the electrical differential, which instead of the differential composed of bevel gear. With the system, the efficiency can be improved and the noise when the bevel motor drives can be eliminated.

1.1.1 Reduction box

The reduction box consists of case housing, reduction device, brake friction device, case cover and wheel axle. The outer housing and case cover are of cast construction. The reducer device and brake friction device are assembled in the case body which is combined of reducer outer housing and case cover. The power is transmitted to the wheel axle through the transmission, drawing the rotation of front wheel. The reducer is fixed on the joint plate of frame with 7 bolts. See the construction in Fig.1-1.

The parts of the drawing:

1.Wheel axle	2.Bolt,drive axle	3.Sleeve	4.Axle ring	5.MLON-ring
6.Tappered roller bearing	7.Housing, reduction box	8.Drain plug	9.Socket head plug	10.Socket head plug
11.Column pin	12.Retainer ring	13.Spacer	14.Spacer	15.Inner ring
16.Fixed seat	17.Screw	18.Internal gear	19.Planet bracket	20.Nut
21.Outer cycloid gear	22.Planet gear	23.Needle bearing	24.Outer spring	25.Outer spring
26.Big bevel gear	27.Pin	28.Inner spring	29.Bearing	30.Spring
31.Mini bevel gear	32.Pin	33.Case cover	34.Socket head bolt	35.Ball bearing
36.Input shaft	37.O-seal	38.Cycloid gear	39.Tapered pin	40.Spring
41.Washer	42.Pin	43.Washer	44.Brake friction piece	45.Spring gasket
46.Friction piece	47.Disk	48.Disk	49.Sealed gasket	50.Piston
51.Seal ring	52.Seal ring	53.Case cover	54.Socket head bolt	55.Socket head spring
56.Plug	57.Pin	58.Seal ring	59.Brake joint	60.Needle pin
61.Drain screw	62.Spring pin	63.Column pin	64.Brake lever	

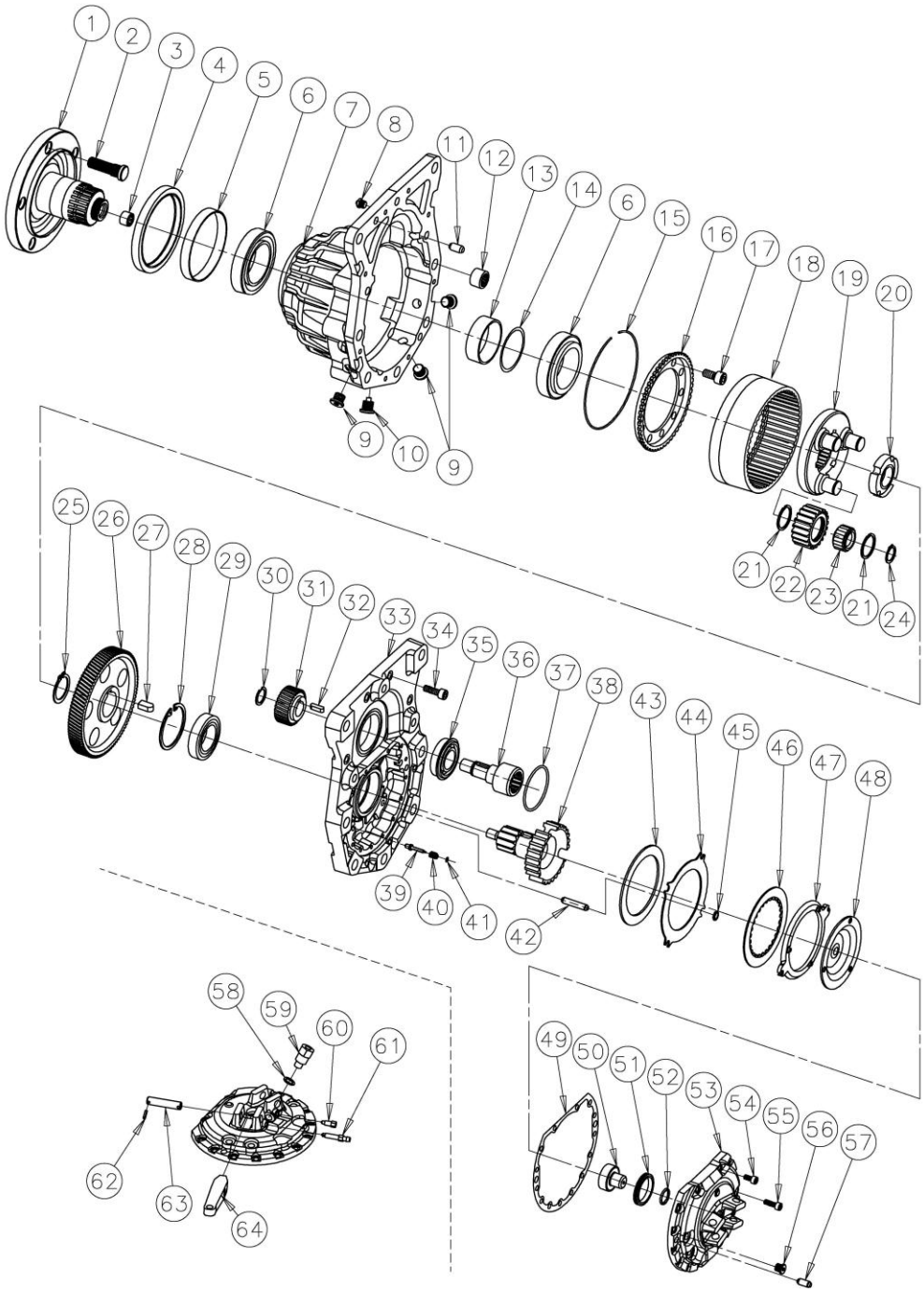

Fig.1-1 Drive axle

1.1.2 Front wheel assy

The front wheel is made up of rim and solid tyre. The types of the tyre and rim of the front wheel:

Tyre size: 18×7-8 Outer diameter × Width = 457×170 (mm)

Rim: 4.33R

1.2 Disassembly of drive system

Before disassembling the transmission case, disassemble the front wheel assy and traction motor joint with it, then you can do maintenance and service on the parts of transmission case.

1.2.1 Removal of wheel (Fig.1-2)

Drain the oil from the transmission case before disassembling the wheel. Loosen the wheel nuts and remove the drive wheel, then loosen the 7 bolts fixing in the frame and remove the transmission case joint with traction motor from the frame.

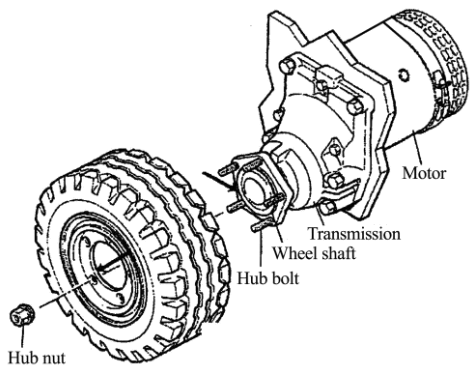

Fig.1-2

1.2.2 Disassembly of traction motor (Fig.1-3)

Remove the three bolts for traction motor (1×M10×50 and 2×M10×90, Pos.1 and 2).

NOTICE:

· Take off the traction motor from the transmission case cautiously.

· In case of the removal of the traction from the transmission case, there is a danger to damage the sealing surface of the o-ring in the housing. If only removing the motor, seal the released transmission opening to avoid the dirt from entering into the transmission case.

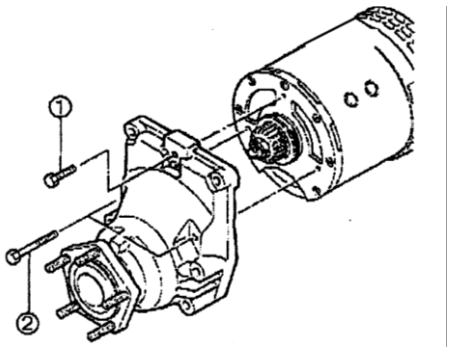

Fig.1-3

1.2.3 Disassembly and assembly of transmission case

The parts of transmission case should not be disassembled generally. If it's necessary to disassemble it, please contact with the sale department of our company.

1.3 Assembly of drive system

1.3.1 Assembly of traction motor

Before mounting, clean the mating surface between transmission case and traction motor with such as loctite 706 or alcohol carefully and make the surface dry, then check the surface for damage, if damaged, remove it with hone.

NOTICE: For the causticity of detergent, when cleaning with it, draw on the protective gloves and goggles to avoid the detergent from spattering on the skin. Forbid swallowing and inhaling and vapors. If it happens, call medical help immediately.

The seal gaskets of the shaft joint with the motor are a double cam seal gaskets and an O-ring, assembling separately on the flange of the motor and reduction box housing. There is a hole in the motor flange for mounting the fixing ring of shaft. The shaft of the motor is fastened along the shaft direction while the flange of motor fastened along the opposite direction (See it as Fig1-4). The flange of the motor is joint on the reduction box with three M10 screws (See it as Fig.1-5), which the length is 50mm, 90mm, 90mm, and the torque is recommended 50Nm.

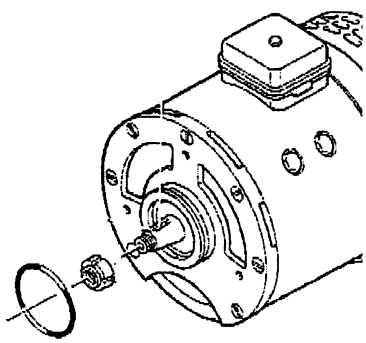

Fig.1-4

NOTICE: After connecting with the motor, the reduction box only can be moved along the shaft direction, while the shaft of reduction box is upright with the motor shaft. For that, sling the reduction box and assemble the spline positioned at the inlet of reduction case aiming the motor shaft. To joint it conveniently, suggesting put three screws in the joint hole of the screw firstly, after the reduction box is
assembled with the motor, exchange with the screws.

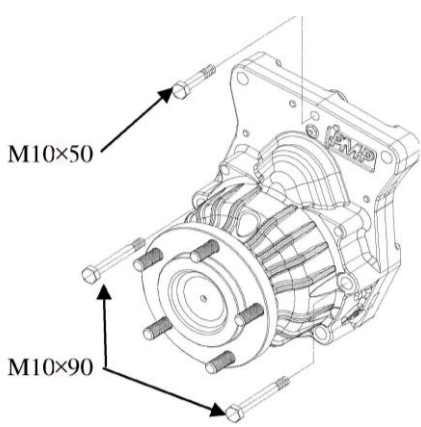

Fig.1-5

When assembling the motor, for avoiding the happening of the noise in the future, don't make the gear of motor hit the driving gear in the transmission case.

1.3.2 Mounting the transmission case on the frame (Fig.1-6)

Check the surface of frame joint plate for damage and irregularities, and the regularity of transmission case surface is required not bigger than 0.1mm. Fasten the transmission case to the frame with 7 M14 hexagon bolts with torque 135 Nm. See it as Fig1-6. There are one inlet and one outlet separately below the transmission case frame.

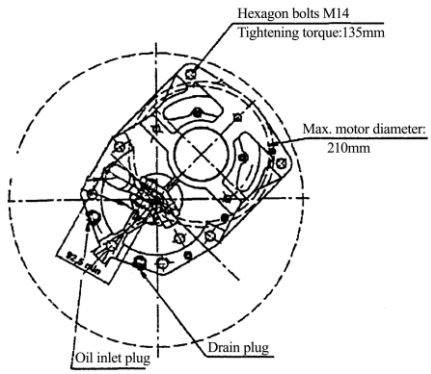

Fig.1-6

1.3.3 Assembly of wheels (Fig.1-7)

The wheel axle of transmission case is fit for assembly of plastic solid tyres and cushion solid tyres.

a) Make the assembly surface on wheel axle and wheel clean, and check it for damage.

b) The bore in the rim should be in line with the bolts of the wheel axle, then push the wheel on, confirming the rim surface and the wheel axle interface coincidently.

c) Tighten the spring gasket, flat gasket and nut with the torque 140Nm.

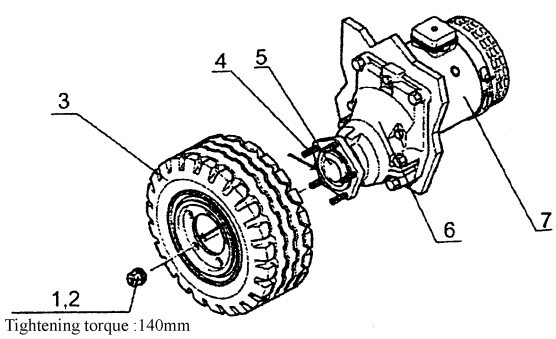

1. Nut, hub
2. Washer
3. Wheel
4. Bolt, hub
5. Wheel shaft
6. Reduction box
7. Driving motor

Fig. 1-7

1.4 Replenishing with gear oil

When the gear oil has been used for 1000 hours or one year (the accurate time is according to the first reached time), exhaust the gear oil in reduction box and replace with appointed gear oil, and do the detailed operation as follows:

(a) Unscrew the drain plug (pos.1) with seal ring (pos.3), exhaust the gear oil, remove the iron powder on the drain plug, then retighten the drain plug, and replace the seal ring if necessary.

(b) Unscrew the oil-fill plug (pos.2) with seal ring (pos.4).

(c) Inject the gear oil in transmission case. When adding oil, make sure that there is not air in the transmission case which will come into bubble.

(d) The standard voltage of appointed adding oil is 0.55～0.65 litre, measured with funnel.

(e) The gear oil type must be one of the following.

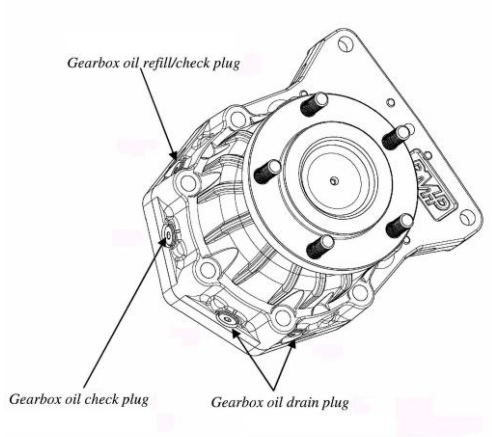

MOBIL	ATF 200 ATF 210 ATF 220
SHELL	DONAXTM ATF DEXRON Ⅱ D-21666 DONAX TG PLUS D-22543 DONAX TG D-21126
ESSO	TYPE SUFFIXA ATF D-21065 ATF D-21611 ATF D-22079 SAE-80W/API GL4/UTTO

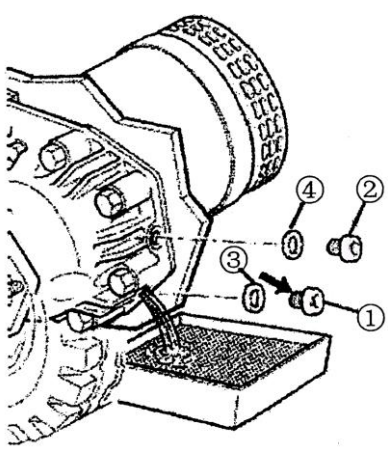

Fig.1-8

(f) Tighten the oil-fill plug which is with seal ring, with torque 22 Nm. See it as Fig1-8.

2. Brake system

2.1 General description

The brake system consists of brake pedal, master cylinder and oil-lubricant brake. The oil-immersed multi-frictional plate brake is assembled in reduction box, eliminating the pollution, extending the life of brake unit and descending the maintenance cost.

2.1.1 Brake pedal

The brake pedal assembly is of sling structure (see the construction as Fig.2-1), mounting on the meter bracket with bracket. The lever of master cylinder transfers the pedal force to brake oil pressure.

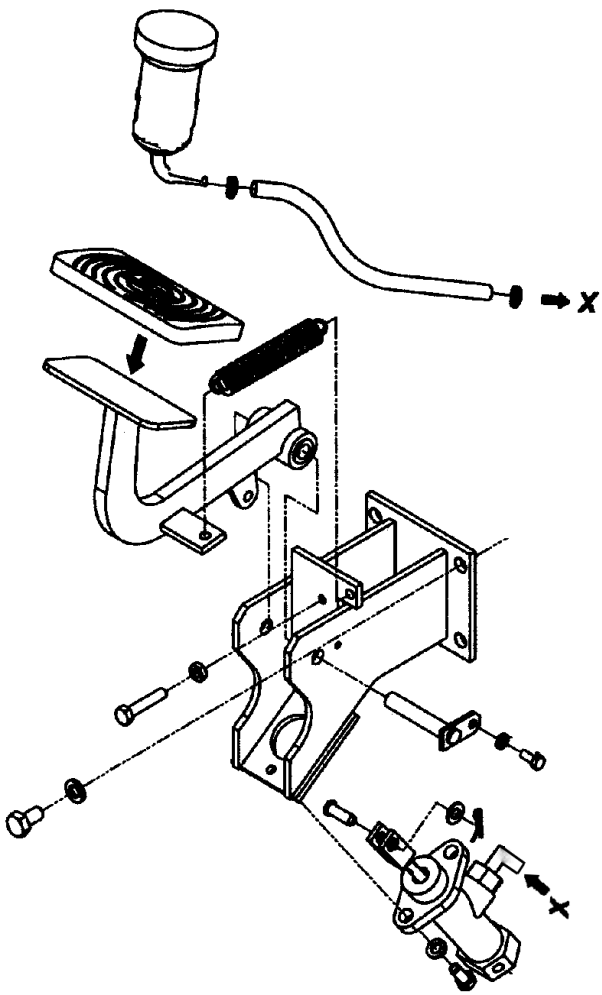

Fig.2-1 Brake pedal

2.1.2 Master cylinder

The master cylinder contains valve support, check valve, return spring, primary cup, piston and secondary cup, which are all kept in place with stop washer and stop wire. The exterior of the cylinder is protected from dust by means of a rubber dust cover. The piston is actuated through the push rod by operation of the brake pedal. As the brake pedal is pressed, the push rod pushes the piston forwards. The brake fluid in the cylinder flows back to the reserve tank through the return port until the primary cup blocks up the return port. After the primary cup passed through the return port, the brake fluid in the cylinder is pressurized and opens the check valve, flowing through the brake pipeline to the operating cylinder. Thus each operating cylinder piston is forced outwards. This compresses or impacts the disc brake to slow or stop the truck. Meanwhile, the cavity caused behind the piston is filled with brake fluid led through the return port and inlet port. When the brake pedal is released, the piston is forced back by the return spring. At the same time, the brake fluid in each operation cylinder is pressurized by the return spring, returning into the master cylinder through the check valve. With the piston in its original position, the brake fluid in the master cylinder flows into the reserve tank through the return port. The brake fluid in the brake pipelines and operating cylinders has a residual pressure proportioned to the set pressure of the check valve, which makes each operating cylinder piston cup securely seated to prevent oil leakage and eliminates a possibility of air locking when the truck is sharply braked.

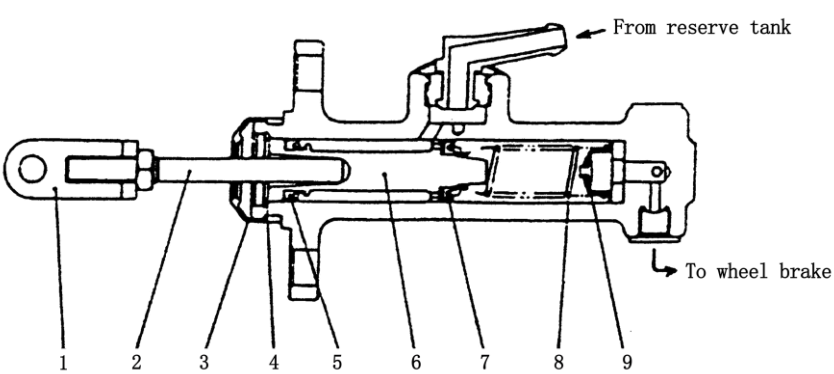

1. Link rod
2. Push rod
3. Dust cover
4. Snap ring
5. Secondary cup
6. Piston
7. Primary cup
8. Spring
9. Check valve

Fig.2-2 Master cylinder

2.1.3 Connecting the brake system and drive unit

There are two connectors in the joint of drive unit and brake system, one used for connecting the traveling brake pipe while the other is used for the exhausting of traveling brake system. See it as Fig2-3.

a) Connecting of traveling brake

Connect the brake pipe connector and brake pipe with the torque 12-16Nm.

b) Connecting of parking brake

Connect the brake cable connector and parking brake lever.

2.1.4 Exhaust of brake system (Fig.2-3)

Exhaust the air mixed in brake system after assembling the brake system and replenishing the brake fluid, and do it as follows:

a) Release the exhaust valve to the position where the brake fluid can be flowed.

b) Press the brake pedal again and again, then the pressure from brake fluid can exhaust the air mixed in brake system.

c) When there is only brake fluid after exhausting the air, press the brake pedal and tighten the plug.

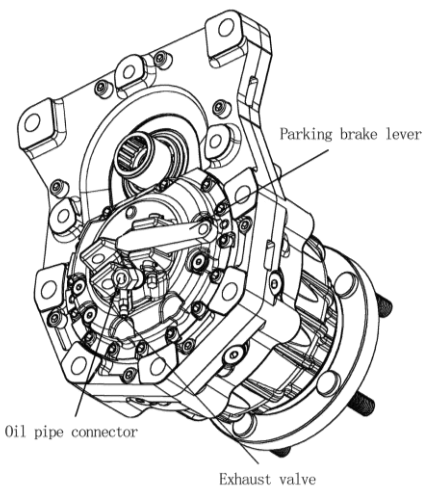

Fig.2-3

d) Release the brake pedal and check the braking, if not brake well, do the exhausting again and again until braking well.

2.1.5 Parking brake device

The parking brake device consists of parking brake unit and brake cable. The parking brake unit is of ratchet wheel type. Handle the brake lever to make the brake cable run. Make the brake lever in an appropriate position by adjusting the stroke of the brake cable.

If you want to release the parking brake position, press the button in the top of brake lever.

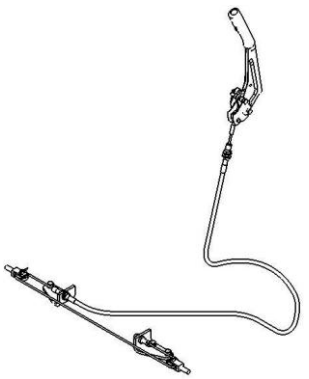

Fig.2-4 Parking brake device

NOTICE: When the hand brake is in initial position, make the drive wheel roll freely.

2.1.6 Operation of brake system

After assembling and debugging the traveling brake and parking brake, press the brake pedal, the normal traveling brake will be came out. Put the parking brake lever on the left side of meter bracket, the brake cable and the disk brake unit in the drive unit is engaged. Pull down the parking brake lever, then the parking brake can be come out.

2.2 Maintenance and adjustment of brake system

2.2.1 Inspection and maintenance of brake system

a) Parking brake performance (Daily inspection)

Check if the parking brake is performed correctly, and then check if the inching switch can cut off the circuit when pulling down the parking brake lever.

NOTE: After working for 3000 hours, confirm that the brake stroke of the piston is not over 3.8mm, if not, replace the brake disk.

b) Traveling brake performance (Daily inspection)

Check if the brake fluid in oil is enough and if the brake pedal can return to the original position by the spring.

c) Brake fluid leakage inspection

Press the brake pedal, if not brake well, check the assembly and tightness performance of traveling brake system. Mark on the brake oil port to check for the leakage.

d) Inspection of master cylinder

If traveling brake not well, firstly check if there is air in the master cylinder. If there is air, exhaust it. Then check the cup in the master cylinder for damage, if damaged, replace it with a new one.

e) Inspection of brake cable

If the two wheels can’t be locked completely at the same time after pulling down the hand brake, check the brake cable for abnormally running, for block performance, for unsuitable cable clearance and for wrong lever turning angle. You can adjust the adjusting bolts in the two ends if the angle is improper or there is bigger idle stroke of the lever.

2.2.2 Adjust the brake pedal

a) Shorten the push rod.

b) Adjust the brake pedal to the proper height with stopper bolt.

c) With the brake pedal pressed by the idle stroke, pull the rod out until its front end

comes into contact with the master cylinder piston.

d) Tighten the push rod locking nut.

2.2.3 Adjust the brake switch (Fig.2-5)

a) Loose the locking nut of the brake pedal after adjusting the height of brake pedal.

b) Pull out the plug, separate the lead.

c) Turn the switch, with the clearance A=1mm.

d) Make sure that the brake lamp is on when pressing the brake pedal.

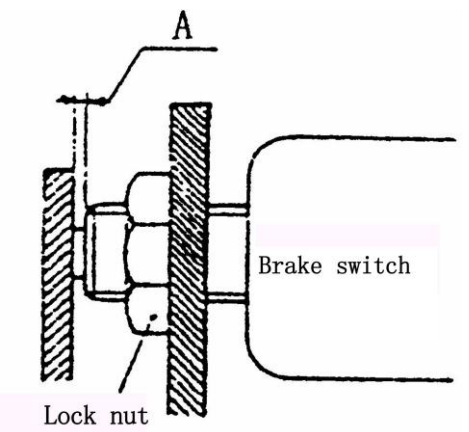

Fig.2-5 Brake switch adjustment

3. Steering system

3.1 General description

The steering system is of powered steering system with load sensing, consisting of steering wheel, steering axle, load sensing steering unit, check valve, steering motor and steering device. The steering axle is connected with the load sensing steering unit with knuckle, then the steering column can be tilted forward and backward to the proper angle (See it as Fig3.1). The steering device is assembled on the rear of the frame, with the gear turning pushed by the steering motor, then the steering wheel can be turned to steering.

Main parameter of steering system

Item \ Model		CPDS15	CPDS18
Model		Rear wheel steering powered	
Steering unit	Type Model	Powered steering system with load sensing BZZ5-50	
Priority valve	Type Model Flow/Distributary Flow pressure	Split-flow dual way type VLC-60 60LPM 8MPa	
Steering motor	Type Model Displacement	Inner gear type BMR-125 117.9	
Rated pressure		7.0MPa	
Radius of steering wheel		Φ310mm	
Steering tyre		16×6-8	
Steering rim		4.33R	

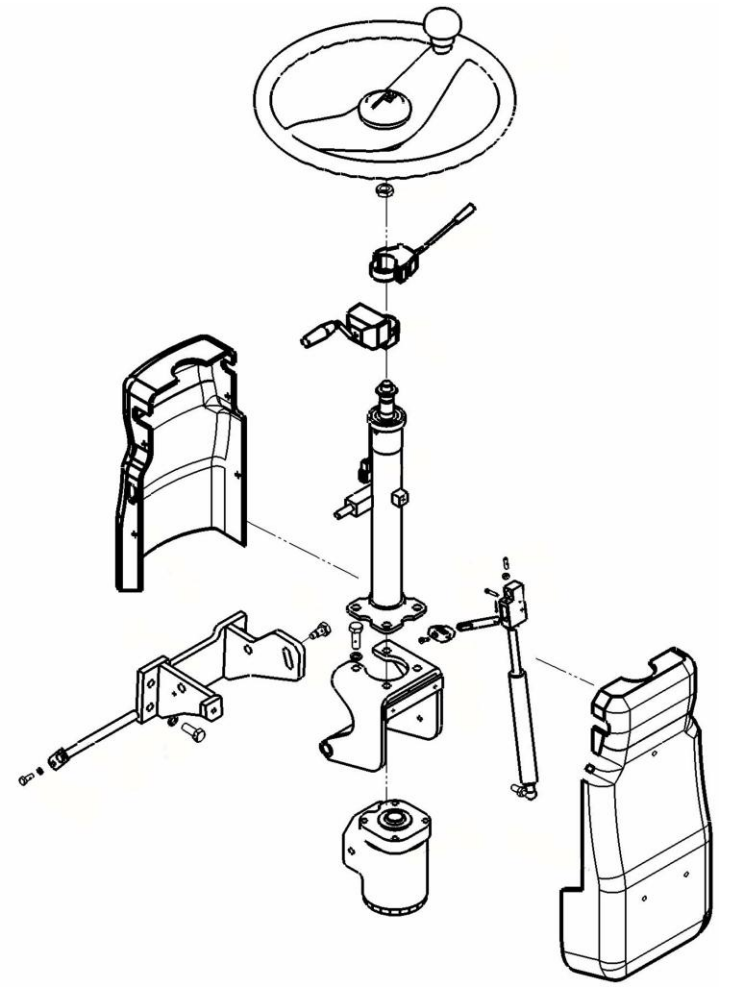

Fig3.1 Steering system

3.1.1 Hand wheel

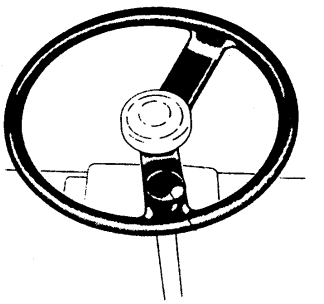

Hand wheel is operated in normal way, that is to say, when turning the hand wheel right, the truck will turn right. When turning the hand wheel left, the truck will turn left. The rear wheels of the forklift truck are steering wheels, which make the back of the truck swing out when turning. The turning method can be mastered easily through practice.

3.1.2 The principle of powered steering system with load sensing

When turning the steering wheel, LS pipe will send the pressure signal from the throttle in the steering unit to the priority valve, with the pressure, the core of the check valve will be balanced to confirm the flow from CF port. The steering circuit doesn't influence the other working circuits. Main displacement will firstly confirm the realization of steering circuit, steering circuit pressure and displacement.

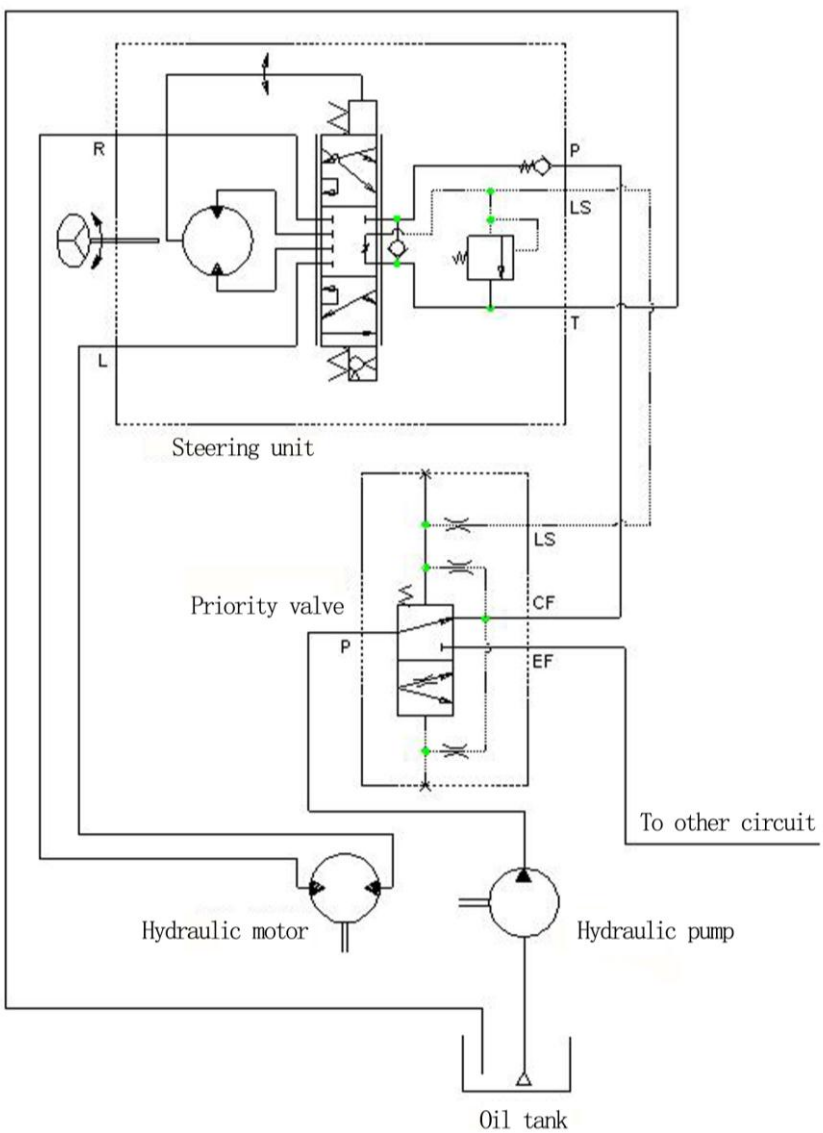

Fig3.2 Principle of powered steering system with load sensing

3.1.3 Steering device

The steering device (Fig.3-3) consists of gear group, steering motor, steering axle body and steering wheel, etc. Driven by the gear motor hydraulic oil, the gear group makes the steering wheel turn, which drives steering axle body turning. The wheel is assembled in the rear wheel hub with wheel rim, while the rear wheel hub is assembled in the steering axle body with two tapered roller bearing. In the inner of the bearing, there is oil seal, which makes the lubrication grease hold in the wheel hub and steering wheel axle chamber.

The steering motor is of a cycloid gear type hydraulic motor (See it as Fig3-4), it is tandem with powered steering unit, drives the gear group, then the steering wheel will be turned.

When the steering wheel is in middle position, set the steering angle in electric control 0 degree, readjust the resistance value in middle position.

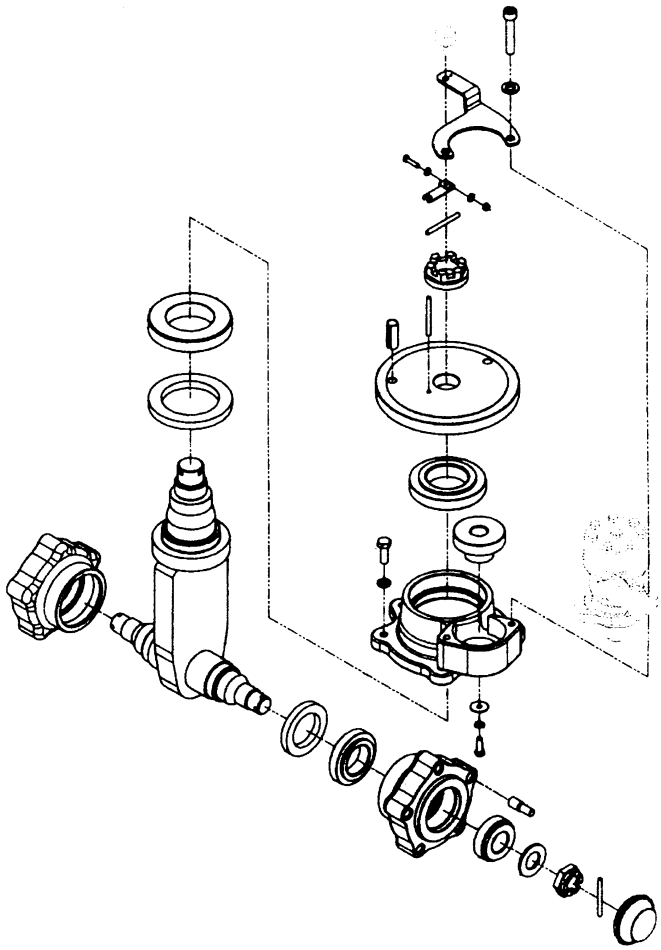

Fig.3-3 Steering device

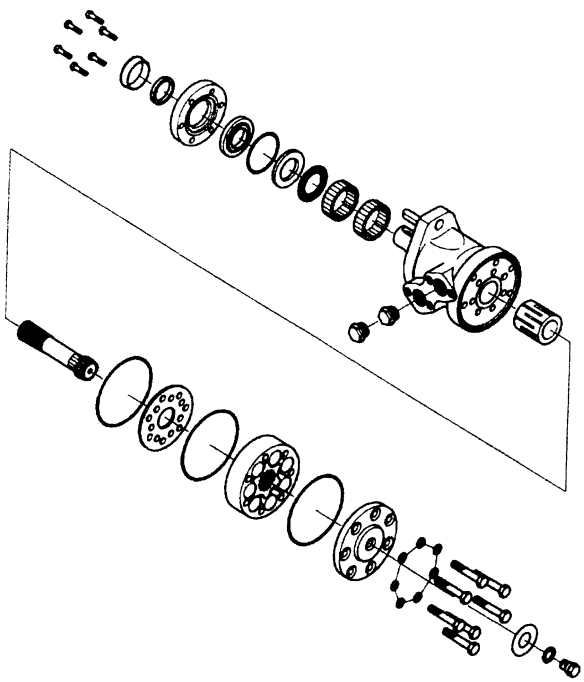

Fig.3-4 Steering motor

3.2 Adjustment and maintenance

3.2.1 Rear wheel bearing pre-load adjustment

a) As shown in Fig3-5, fill up the chamber formed by wheel hubs, wheel hub bearings and wheel hub covers with lubrication grease. Coat the lips of the oil seals with lubrication grease.

b) Press the hub bearing into the hub and fit the hub on the wheel shaft.

c) Fit a flat washer and tighten a castle nut with a torque of 206-235Nm (21-24kg·m) and loosen it, and then tighten it again with a torque of 9.8 Nm (1kg·m).

d) To ensure firm installation of the hub, slightly knock at it with a wooden hammer and in the meantime, rotate the hub for 3-4 turns.

e) Tighten the castle nut and align one of the notches with a cotter pin hole drilled in the steering knuckle.

f) Again slightly knock at the hub with a wooden hammer and in this time, rotate the hub manually for 3-4 turns to ensure its smooth rotation with a specified torque of 2.94-7.8 Nm (0.3～0.8 kg.m).

g) If the torque value necessary to rotate the hub is more than the specified one above mentioned, screw out the castle nut for 1/6 turn and measure the torque value.

h) When the torque value measured is up to the specified one, lock the castle nut with a cotter pin.

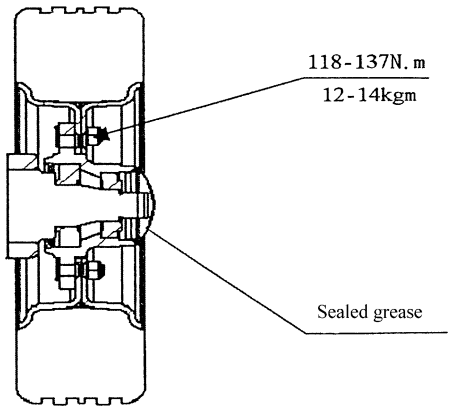

Fig.3-5 Pre-load adjustment

3.2.2 Inspection after reassembling the steering system

a) Turn the steering wheel left and right, inspect whether the steering power is smooth.

b) Inspect whether the connection of hydraulic pipeline is correct and whether the left and right steering is opposite.

c) Lift up the rear wheels and slowly turn the steering wheel left and right several times to exhaust the air from the hydraulic pipeline and the steering cylinder.

3.2.3 Steering system troubleshooting

Problem	Analyses of trouble	Remedies
Fail to turn hand-wheel	Pump damaged or breaking down.	Replace.
	Hose or joint damaged or pipeline blocked.	Clean or replace.
Difficult to turn hand-wheel	The pressure of the relief valve is too low.	Adjust the pressure.
	Air in steering oil circuit.	Exhaust air.
	Steering unit fail to recover due to spring piece damaged or elasticity insufficient.	Replace spring piece.
	Oil leakage in the steering motor.	Inspect the seal of the piston.
Truck's snacking or moving with oscillation	Broken or deteriorated spring.	Replace.
Excessive noise	Too low oil level in the oil tank.	Refill oil.
	Suction pipeline or oil filter blocked.	Clean or replace.
Oil leakage	Seals of guide sleeve, pipeline or joint damaged.	Replace.

Notice: The starting of hydraulic motor is controlled by the directional switch. Press the accelerator pedal, the hydraulic motor will be started only when the directional switch is in forward or backward position.

When exhausting, start the hydraulic motor, slightly turn the steering wheel left and right (if anything unusual happens, turn off the power and resolve the problem), the turning wheels will be turned, then the air in the steering system will be exhausted.

4. Electric system

4.1 General description

Electric system mainly consists of battery group, traction motor, lift motor, multifunctional integration controller system, control switch, liquid crystal instrument, harness and lighting device, etc.

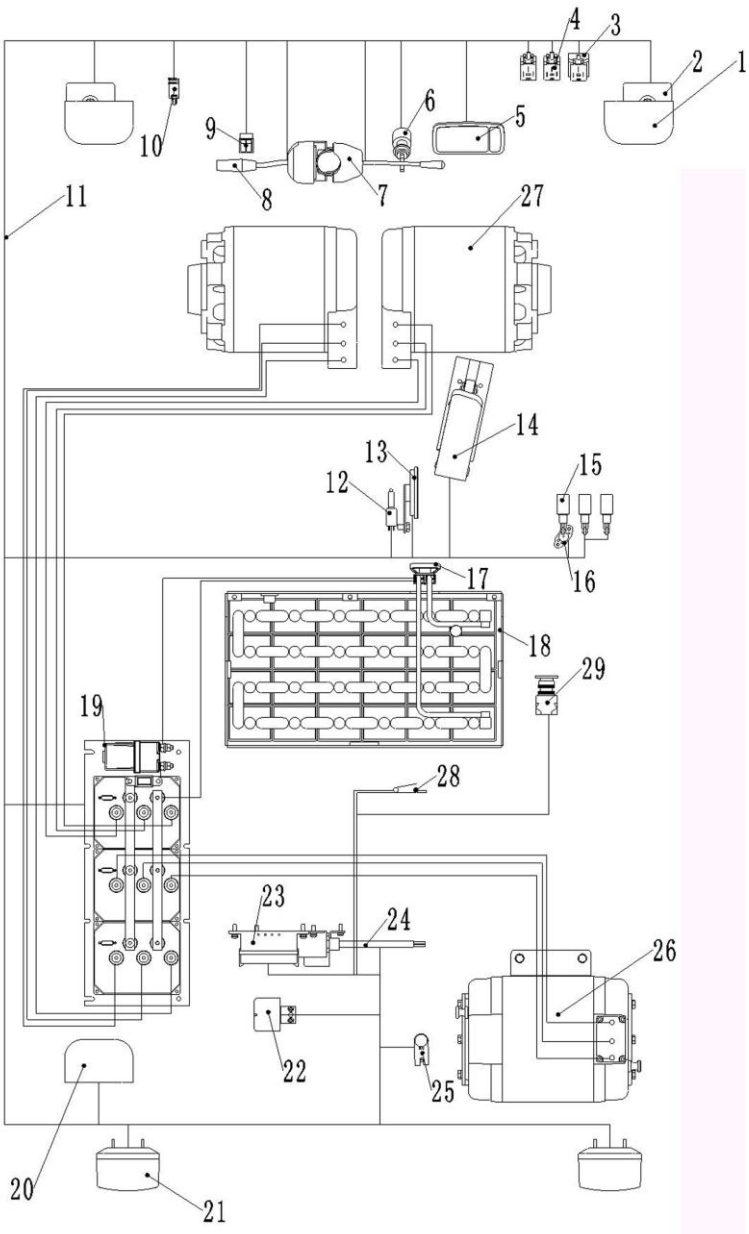

1. Head lamp
2. Front combination lamp
3. Flash light
4. Inching relay
5. Meter assy
6. Start switch
7. Turning switch
8. Direction switch
9. Lamp switch
10. Hand brake
11. Main harness
12. Brake switch
13. Horn
14. Accelerator
15. Inching switch
16. Lift potentiometer
17. Socket assy
18. Battery assy
19. Controller assy
20. Rear working lamp
21. Rear tail lamp
22. Back-up buzzer
23. Fuse box
24. DC commutator
25. Steering potentiometer
26. Lift motor
27. Traction motor
28. Seat switch
29. Emergency switch

Fig.4-1 Construction of electric system

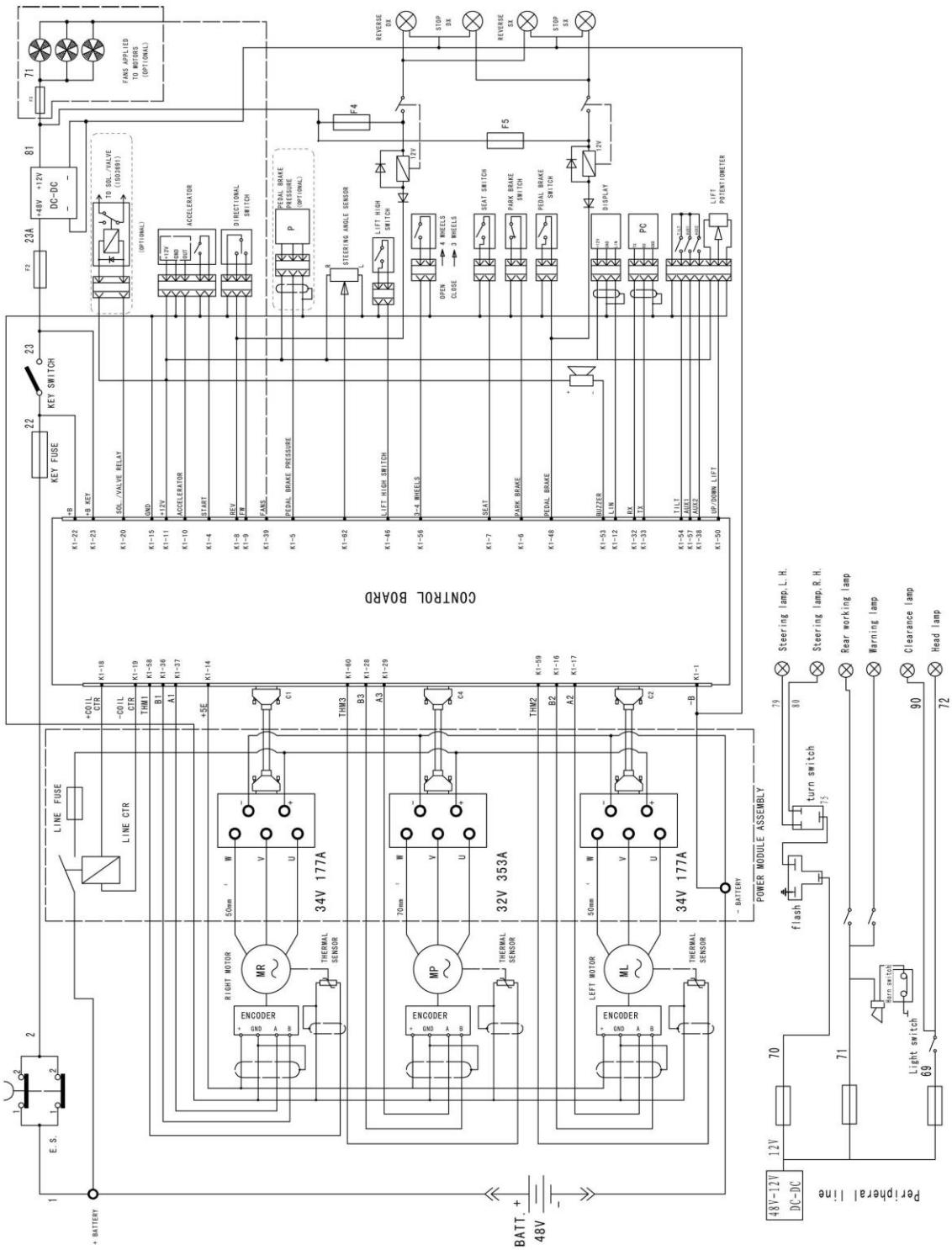

Fig.4-2 Principle of electric system

4.2 SME compact meter

4.2.1 General description

Three-wheel AC electric forklift truck adopts Italy SME newly LCD meter, displaying in real-time on high definition LCD. The CAN wire of meter is connected with control main board according to RS232 communication standard. The EYE software obtains allowable landing and upgrade panel, with functions of detailed upgrade, diagnosis and adjustment. The control circuit adopts SCM technology, sampling, displaying and controlling in real-time. The intense and feeble circuit in the instrument adopts light-electricity separating with control relay.

4.2.2 Outline and instructions of meter

15.9	Traveling speed (km/h)
(P)	Hand brake switch, lamp lights when pulling the hand brake
	With safety seat switch open, meter indicates seat symbol, main contactor can’t be connected and truck can’t travel until seat switch closes.
15863.9	Time meter (Odometer)
	Turning angle, indicating the position of rear wheel
	Maintenance time indication Remind the users to maintain and service the forklift truck.
	Slow-speed operating With the lamp on, the traveling speed and lifting speed will be reduced in slow-speed mode.

	Traveling speed (Indicated from “0-9”)
	Overheated motor temperature warning
	Battery level (indicated by 9 segments) Display signals with alarm code 12 when battery is completely discharged. Charge the battery when indicating on 1 segment.
E S H	Press E-S-H button, you can set operating mode for system. (E-economic mode, S-midrange mode, H-high mode)
	H-High mode: High acceleration, decelerate rate, max. grade ability, suitable for loading large quantity goods in short time and climbing abrupt slope, this mode wastes electricity, only used when necessary.
	S-Midrange mode: The parameter lower than High mode
	E-Economic mode: The parameter has been optimized. Working on this mode in general for saving electricity.
ENTER	1. Start the key switch, press ENTER button for 3 seconds, enter into adjust and diagnosis mode.
	2. When operating, press for 3sec, enter into diagnose mode.
	3. Quit when pressing ENTER under diagnosing mode, the enter key is used for setting new parameter.
	1. Reduce the parameter in adjusting mode when pressing this key.
	2. The parameter can be reduced in adjusting mode.
	3. Press the key for 1sec, indicating mileage or weight.
Note: The function of Up key is same to down key, enter, up and down key have some functions not activated.	

Four LED signals on the left of compact meter indicate when operating the relevant switch.

	Alarm indication; red color LED
	Lamps indication; green color LED
	Steering switch on, steering signal activated; green color LED
	Insufficient brake fluid; red color warning LED (optional)

4.2.3 Troubleshooting of alarm code

Alarm code	Alarm description	Alarm code	Alarm description
1	Max. battery voltage	2	Min. battery voltage
3	Pedal trimmer fault	5	Eeprom alarm
6	Pre-charge	8	Power
		25	
9	Inverter	11	Capacitors
12	Low battery voltage	13	Over-heating motor
		19	
15	Motor current offset alarm	17	Main breaker
16			
18	Watchdog timer alarm	20	Power inverter over-heating
		22	
37	Alarm on 5V encoder voltage	38	Alarm on 12V output voltage
50	Pump motor commands active on start	61	Motor blocking over-heating
		62	
		65	
63	Seat switch open on start	64	Wrong start
74	Encoder alarm	77	Motor thermal sensor alarm
75		78	
80	Inverter temperature alarm	83	CRC fault alarm
81			
84	Bank CRC restored	90	Steering sensor alarm
91	Brake pedal switch alarm	98	Capacitors pre-charge too slow
99	Capacitors pre-charge timeout		

4.2.4 Process and instruction of meter

(1) Turn on the key switch, some initial value mode will indicate for 3sec on the meter. The mode helping operators judge the type of the forklift truck will indicate on the position indicated speed, such as the four-wheel forklift truck is represented by CO. The information about speed, electric energy, turning angle, hand brake, seat switch, E/S/H selection and working hours is indicated on the meter, which help confirm the working state.

(2) Alarm indication is on the first left line of the liquid crystal form, indicating three working states when it lights up, as follows:

· Normally operating (When the system key is on or off, the lamp lights up)

· Meter is not connected to the controller (The lamp is on after this state remains for 3sec)

· Meter is not working (lamp lights)

No alarm code and the alarm indication lights off when the truck works normally.

(3) Move the turning switch forward and backward, the left and right turning signals flash. When turn on the headlamp, lamp indication lights up.

(4) Brake indication

Operating the hand brake, indication as [P] lights up, release the hand brake, the signal turns off.

Note: When the electric quantity is below normal, that is to say the position of the hand on the meter is down one form, please charge up the battery.

4.2.5 Working circumstance

(1) Elevation is lower than 1200 meters.

(2) Working temperature -25℃～+40℃.

(3) Relative humidity is not larger than 95%.

4.2.6 Cautions

(1) Forbid wetting the meter. When washing the truck, don’t let water into the meter, if it happens, clean it with dry cloth.

(2) Don’t pull the plug of the meter and harness for the connection.

(3) Forbid impacting or scratching the meter strongly.

(4) When the meter works abnormally, contact with our company for maintenance.

4.3 SME AC electric control assy

4.3.1 General description

Three-wheel AC controller assy is composed of three power inverters which separately drives traveling and lifting motor, main control box, DC contactor, control aluminum sheet. Main control box is connected with power source module, separately controlling three power modules.

4.3.2 Structure of controller

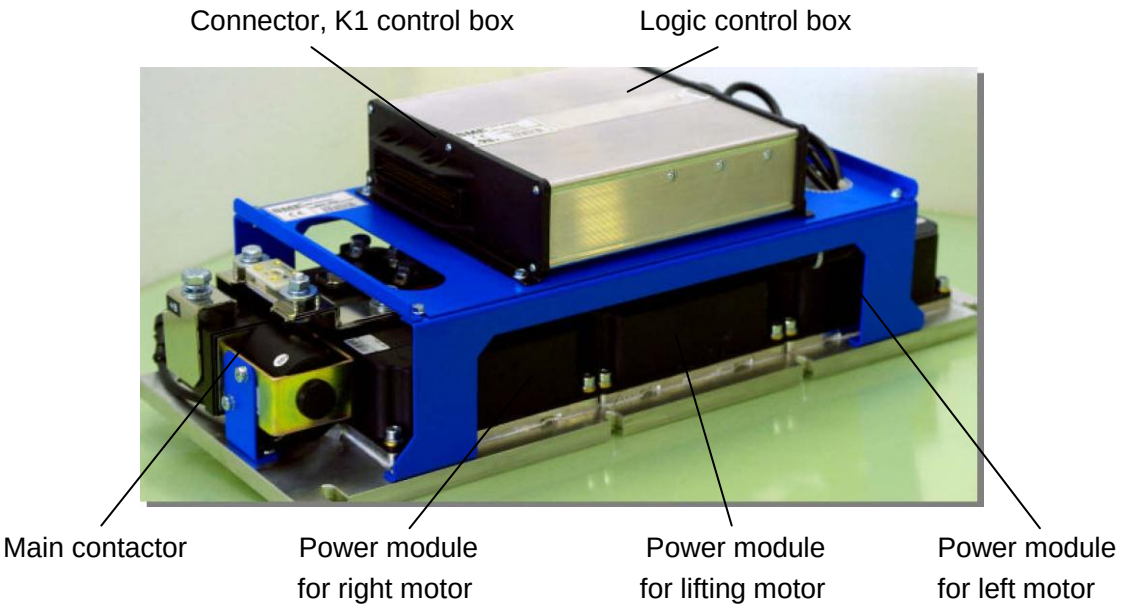

NOTICE: The electric control device contains capacitance which is discharged by procedure through hydraulic motor when cutting off the key switch, then cut off the main contactor to turn off the circuit power. Before doing the service, maintenance and inspection for the forklift, firstly cut off the key switch for one minute, then discharge the capacitance completely by process control.

4.4 Distribution and setting of sensor

4.4.1 General description

The electric forklift truck embodies many superior features, such as infinitely variable lifting speed, steering speed adjuster and pedal setting, which can be adjusted and set in real-time by EYE software. These functions have been initialized before delivery and needn't to be changed except the conditions as follows:

1. After long-term operation, the loose parts will be indicated with alarm codes.
2. The damaged electronic components are indicated with alarm code, replace them.
3. When replacing or disassembling other parts, it's necessary to reset the value after disassembling steering, lifting potentiometers.

4.4.2 Steering potentiometer

1. Specification of steering potentiometer

Resistance limitation: 0KΩ-5KΩ

Steering angle: 0°-360°

Voltage: 12V

2. Adjustment

a) Install the potentiometer on truck body, make steering wheels on zero degree (straight traveling direction), adjust potentiometer to make output resistance value be about 2.5 KΩ, if there is deviation, the output resistance must be between 0 KΩ and 5 KΩ when locating on 90°, -90° position.

b) Connect PC machine with controller connector.

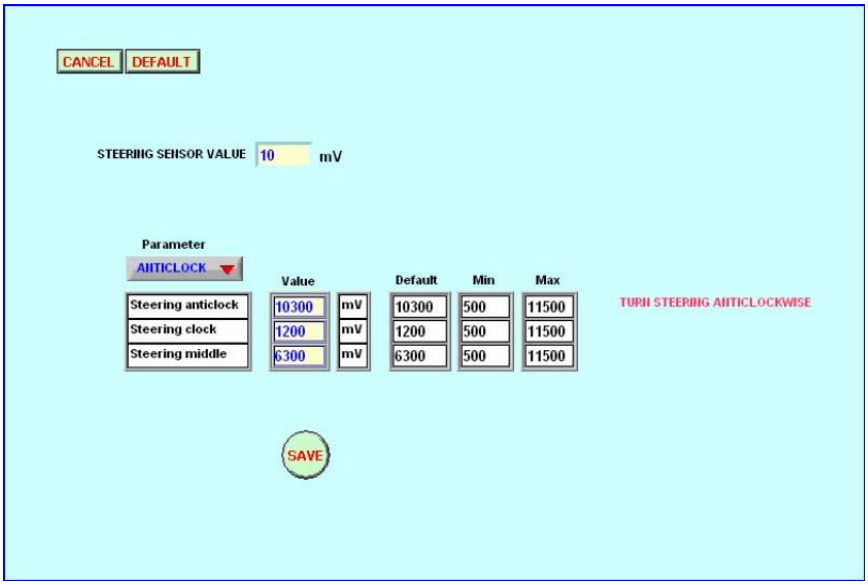

c) If electric potentiometer installs correctly, the output voltage value will be changed with hand wheel's turning.

d) Enter STEERING SENSOR CALIBRATION menu.

e) Select ANTICLOCK parameter, turn hand wheel left until minimum steering value displays, save it.

f) Enter CLOCK menu.

g) Turn hand wheel right, until maximum steering value displays, save it.

h) Enter MIDDLE menu.

i) Turn the steering wheel left and right until zero value displays (straight traveling direction), save it.

j) Quit the menu.

Do trial operation, check if the position of steering wheel and displaying angle of meter is consistent (range over 0°, 90°, -90°).

4.4.3 Lift potentiometer

1. Specification

Resistance limitation: 0KΩ-5KΩ

Effective straight travel: 9±0.5mm

Voltage: 12V

2. Adjustment

a) Install potentiometer on the first level lift of multi-way valve, make sure that the top lever of potentiometer runs freely.

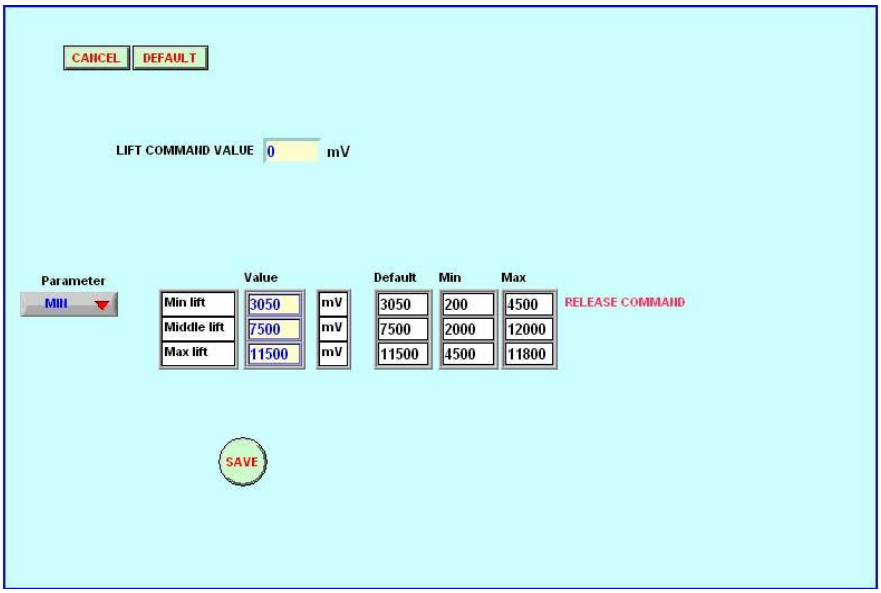

b) Connect PC machine with controller connector.

c) Enter LIFT CALIBRICATION menu.

d) Select MINIMUM parameter, the minimum value will be indicated in “lift calibration value” frame, save it.

e) Enter MAXIMUM menu.

f) Operate lift lever, until the maximum potentiometer output value indicates and save it.

g) Enter MIDDLE menu.

h) Operate lift lever, until indicating middle value between minimum value and maximum value, save it.

i) Quit the menu.

4.5 AC microtron

4.5.1 Outline and port function

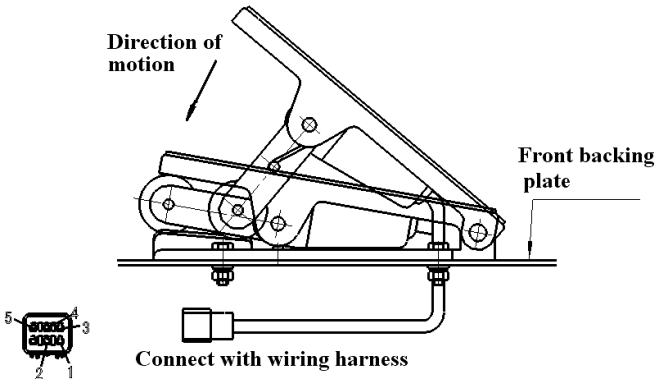

4.5.2 Sketch for connector and port

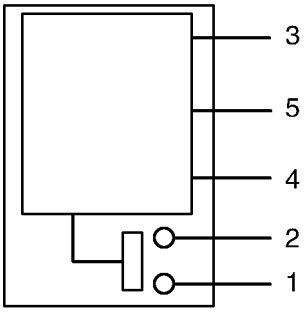

No.	Definition	Color
1	Switch output1	Yellow
2	Switch output2	Blue
3	Power positive input	Red
4	Power negative input	Black
5	Accelerator signal output	Green

Accelerator signal: linear ranged from 0.38V～0.42V to 3.9V～4.1V

Switch signal: Non-polarity opening contact. Capacity: 2A/100V

4.5.3 Setting for accelerator

a) Install potentiometer on front backing plate, make sure the accelerator pedal on initial state.

b) Connect PC machine with controller connector.

c) If accelerator connects correctly, the output voltage will change with the stroke of the pedal.

d) Enter ACCELERATION PEDAL CALIBRATION menu.

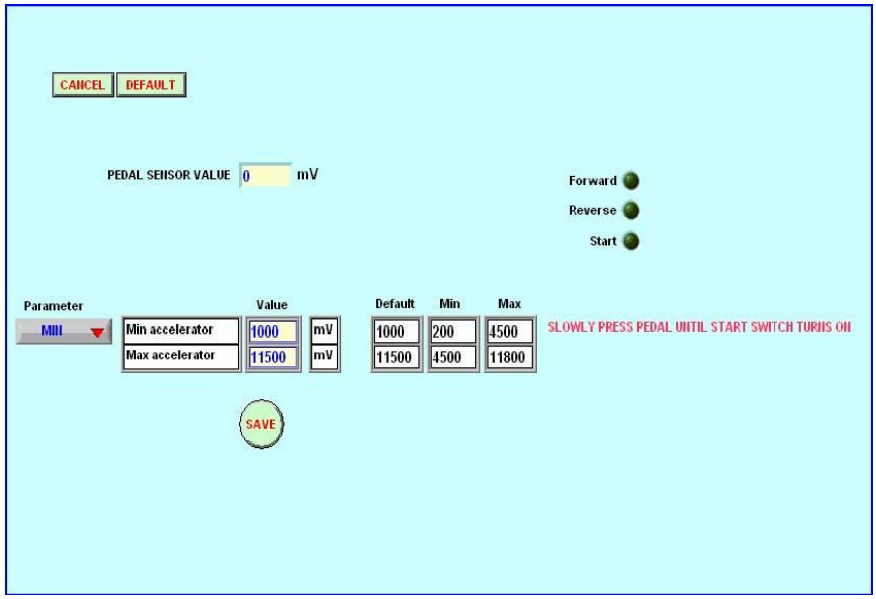

e) Press the pedal slowly until START lamp lights, save it.

f) Select MINIMUM menu, press the pedal slowly until output value is larger than start value, save it.

g) Select MAXIMUM menu, press the pedal slowly until the max output value occurs, save it.

h) Quit the menu.

5. SME three-phase AC motor

5.1 General description

The power system of three-wheel electric forklift truck is composed of two three-phase AC drive motors (6.5kw) and one three-phase AC lifting motor (12kw). It's with function of speed sensor, temperature sensor, simple construction, reliable performance, free of maintenance. The three-phase AC motor is composed of stator, rotor, speed encoder and temperature sensor.

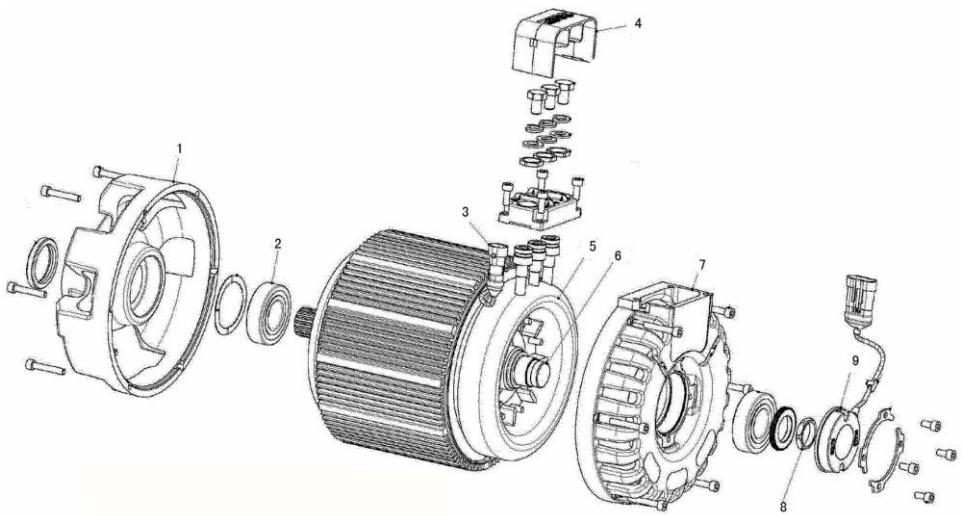

Structure of AC motor

1. Front cover	2. Bearing	3. Temperature sensor
4. Support cap	5. Stator	6. Rotor
7. Rear cover	8. Gear sensor	9. Speed sensor

5.2 Operating environment

(1) Elevation is lower than 1200 meters.

(2) Air temperature ranges between -25℃ and +40℃.

(3) Relative humidity is 100%.

5.3 Daily inspection and maintenance

(1) Always keep clean and no water, oil pollution or dust in the motor.

(2) Check the bearing for heat or leakage.

(3) The load current of the motor can't be over rated current.

(4) If there is friction, scream or other noise, stop working at once, after removing the failure, the motor will keep on working.

6. Battery and charger

6.1 Structure of battery

Battery is composed of lower pole plate, negative plate, clapboard, battery groove cap and electrolyte.

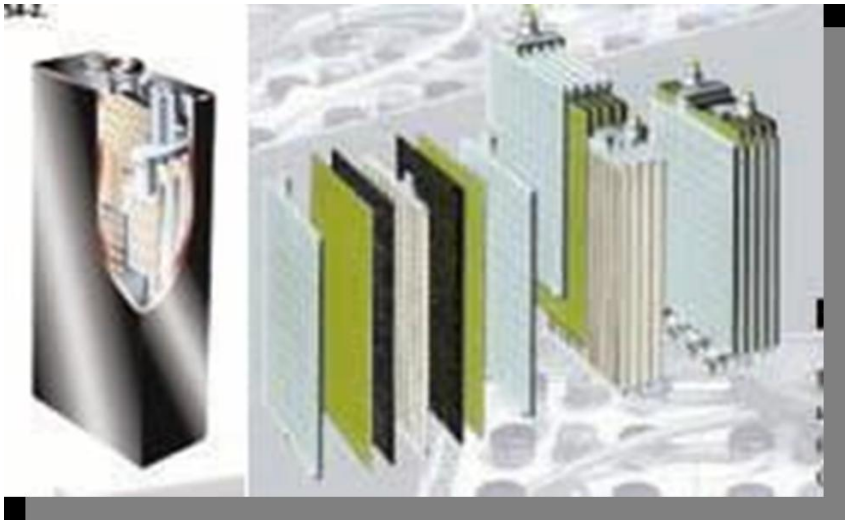

Fig.6-1 Structure of battery

6.2 Specification of battery

Model	DA505
Capacity	505Ah/5h
Voltage	48V
Density of electrolyte	1.280 g/cm^3
Unit quantity	24
Max. weight	920kg
Min. weight	850kg
Charging pressure	48V

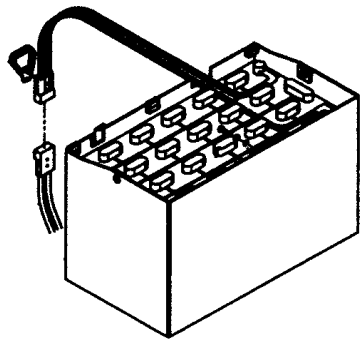

6.3 Usage and maintenance of battery

The correct using and daily maintenance is very important for the performance and useful life of lead-acid battery. Operators must maintain and service the battery according to the manual and realities, fill in the record card of charging. The card can be copied as the daily inspection record, referred to the attached list at the back of the manual.

6.3.1 Information about battery operation

(1) Before using the new battery, clean the surface and check for the damage. Smear butter or vaseline on the connectors to retard corrosion.

(2) The battery is assembled on the truck for balance weight, if it's lower than the min. weight, the load capacity will be affected. When assembling the battery on the truck, fasten it with pin. The pin must be assembled after lifting and replacing the battery. The stability of the truck will be affected with no fixed pin.

(3) The first charge before using new battery is initial charge, after that, the current of common charging must keep the specified value, and input capacity is 130%-150% of output capacity, the battery must charge for about 12 hours.

(4) When operating the battery, avoid over-discharging (mean the voltage of single battery is lower than 1.80V) and over-charging, for it will effect the usual life and performance of battery.

(5) When charging, open the cap for pouring liquid. After finishing charging, close the cap. Keep the vent clear, for prevent exploding and damage of battery.

(6) After using the battery, charge it in time. If not charging in time, undercharge usually, standing idle without charging for long time or over discharging, the pole plates of the battery will be sulfatization, which effect a decline in performance of the battery or cause failure if seriously.

(7) There is oxygen-hydrogen separated out when charging, it's necessary to keep good ventilation condition and avoid burning to keep off the explosion.

(8) During using and charging, the level of the electrolyte will decrease and the density will increase. Usually add distilled water to keep normal capacity and density of electrolyte.

Notice: Electrolyte can't be added directly.

(9) Keep the surface of the battery clean, maintain and service the pole terminals, bolts and connectors, loose connections or poor contact must be removed in time.

(10) During using the battery, if the voltage of the single battery is uneven or the battery is not often used, a balanced charging (an amount over charge) every month is necessary.

6.3.2 Compound electrolyte

(1) The electrolyte of battery must be compounded with sulphuric acid and distilled

water or deionizer water according to GB4554 standard. The density of electrolyte is 1.280-1.290g/cm^3 (25℃).

▲Temperature conversion of density

The density of electrolyte is changed with temperature, the relation is counted as follow formula: D25=D t＋0.0007

D25—The density of electrolyte (g/cm^3) at standard temperature (25℃)

D t—The real density (g/cm^3) when the temperature is t

0.0007—Exchange factor of temperature

t—The temperature of electrolyte when measuring density

(2) Compound the electrolyte with ceramics cylinder which is anti-acid, anti-heat, without iron, or other anti-acid containers. When compounding the electrolyte, first put measured distilled water or deionizer water in clean container, then put measured thick sulphuric acid into water, at last mix them with vitriol stick.

Note: Don't put water into thick sulphuric acid against spattering and causing injury.

6.3.3 Perfusing electrolyte

(1) After assembling the battery, twist pore plug and pour the electrolyte cooled down to 30℃ into the battery, which will be absorbed by pole plates, add electrolyte to 15-20mm upper the plate in time.

(2) After perfusing the electrolyte, the temperature of the battery will raise. Charge the battery after the fluid cooling down to 35℃ about 4-8 hours later.

Note: Normally, the electrolyte in the battery has been compounded, so it's not necessary to add again. The electrolyte only can be added and compounded according to the need when the professional repairs the battery.

6.3.4 Measure density of electrolyte

The density of electrolyte is changed with the temperature. When measuring the density of electrolyte, put the sucker of the densimeter into the electrolyte vertically, extruding the rubber tube with finger, then the electrolyte will be absorbed into the glass tube, at last, the buoy of densimeter will float. Read the number of densimeter.

Note: The densimeter must be floated vertically, not lean to the glass tube.

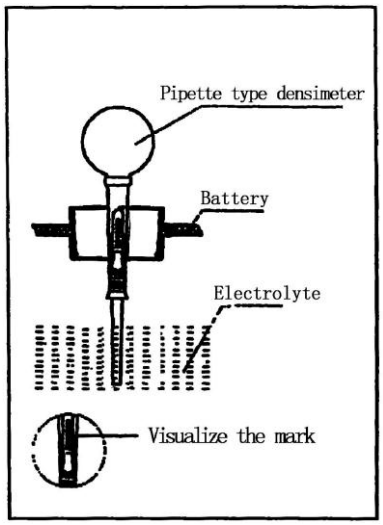

6.3.5 Adding distilled water

(1) Get a certain amount of distilled water with a graduated container.

(2) Open all pouring caps of battery units.

(3) Absorb distilled water with ball type injector to charge the battery. When electrolyte is over 15-20mm upper the plate, stop charging.

(4) After charging, tighten the pouring cap.

(5) Clean the surface of battery unit with a wet cloth.

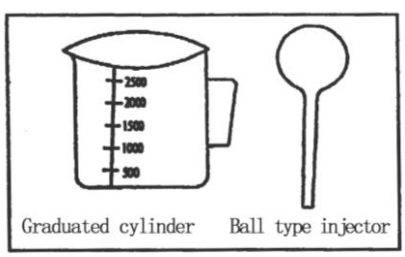

Note:

(1) Wear eyes-protect glasses, rubber overshoes and rubber gloves.

(2) When adding the distilled water, never exceed the appointed amount. Adding too much will lead the leakage of electrolyte, then the truck will be damaged when charging or discharging.

(3) When adding too much, draw out water with ball type injector.

6.3.6 Charge the battery

(1) Precaution when charging

a. Each time after the battery is discharged, it should be charged in time. Don’t place

the discharged battery more than a day. If it is left idle for long time without charging, sulphatized pole plates will make the battery reduce performance.

b. When the forklift truck is seldom used, it is necessary to charge the battery full before laying aside and then charge it once a month.

c. Measure the density when the discharging quantity is thought very weak, when the density is below 1.160, it is necessary to charge the battery.

d. Balanced charging is necessary when the density difference is over 0.020, usually give the battery a balanced charging every two months.

e. When the time of balanced charging is too more, that is over charging, battery's life will be shorten.

f. If the temperature of electrolyte is above 55℃ before charging, it is necessary to leave the battery idle for a period of time, not until the temperature come down can it be charged.

g. Overcharging or over discharging could make the temperature of electrolyte go up. When charging the battery, open the battery cover to radiate heat and ventilate.

(2) Characteristics of full charging battery

a. The battery voltage is about 52V (1-2.5t forklift truck with 24 groups batteries,), or 86.8V (3t forklift truck with 40 groups batteries).

b. The density of electrolyte is about 1.280g/cm^3.

6.3.7 Storage of battery

(1) Store the battery in dry, clean, proper ventilation warehouse. (5℃—40℃)

(2) Let the battery far away from the direct sunshine, insolating and drenching, and the heat source over 2 meters.

(3) Avoid the battery being upside-down, tailed-flat, knocked or pressed.

(4) Far from any poisonous or mordant things. Forbid any metals and foreign matters dropping into the battery.

(5) Don't store the battery with electrolyte. Under special conditions, charge the battery and adjust the fluid level and density of electrolyte. In the process of storage, charge the battery according to the common way every month.

6.3.8 Handle waste battery

Waste battery should be handled properly in line with relevant laws and regulations.

6.4 Troubleshooting

There are lots of reasons for the troubles, besides production quality or transportation and storage, unsuitable maintenance will lead to many troubles. After the failure launch, it's necessary to analyze and take effective measures to remedy as soon as possible. The features, reasons and troubleshooting of the common troubles are as follow:

Feature		Cause	Remedy
Capacity drops	1. Rated capacity not being reached or not enough.	Not enough charge.	Balanced charging, improve the operating way.
		Density of electrolyte is too low.	Adjust the density of electrolyte.
		The connecting line isn't clear, too high resistance.	Unblock the outer connection line and reduce the resistance.
	2. Capacity drops gradually.	Pole plates are sulphated	Charging repeatedly to exhaust the condition of sulphating.
		There is harmful matter in electrolyte.	Check electrolyte, replace it if necessary.
		The battery is localized short circuit.	Check and remove.
	3. Capacity drops suddenly.	The inner or outer short circuit of battery	Check and remove.
Voltage is abnormal	1. The voltage is too high when charging, drops quickly when discharging.	The pole plates are sulphated	Exhaust the condition of sulphating.
	2. Opening voltage reduces markedly.	Opposite pole, short circuit.	Check signal voltage and exhaust it.

Feature		Cause	Remedy
Abnormally giving off gas	1. No gas or little during the end stage of charging.	Low charging current or charging not enough.	Adjust charging current and go on charging
	2. No gas after charging.	Short circuit of the inner battery.	Repair the short circuit
	3. Giving off too early with large quantity gas when charging.	Pole plates are sulphated.	Exhaust the condition of sulphating
	4. Give off gas on the process of laying or charging.	No laying after charging, or there is impurity in electrolyte.	Discharge or replace electrolyte after laying for 1 hour.
Temperature of electrolyte is high	1. When charging normally, the temperature raises abnormally.	Too large current or short circuit when charging.	Adjust the charging current or exhaust the short circuit.
	2. Some batteries' temperature is higher than others.	Pole plates are sulphated.	Exhaust the condition of sulphating.
Color and density of electrolyte is abnormal	1. Density rises less or stays.	Pole plates are sulphated	Exhaust the condition of sulphating
	2. After charging, the density drops heavily when storage.	Quick self-discharging.	Many impurities are in electrolyte, replace electrolyte.
	3. The color and smell is abnormal, and with turbid sediment.	Electrolyte is not pure, active matter gives away.	Replace electrolyte and clean the inner part

6.5 Charger

Charger consists of controller, power block and transformer. It adopts intelligent closed cycle control, it can display the status of charge and fault, and can measure the battery automatically. It's with dynamic tracking, closed cycle controlling, making the battery keep in the critical state of optimal charging electrochemical reaction.

6.5.1 Charger panel

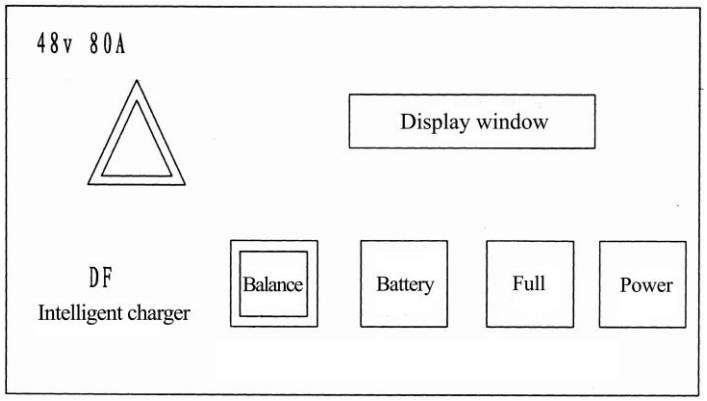

(1) When connect to power and turn switch, “Power” indication lamp lights.

(2) When the battery quantity is full, “Full” indication lamp lights.

(3) When the battery needs balanced charging, press “Balance” button and connect power, “-JH-”displays on the display screen , when pressing the button again, the charger restores to normal.

6.5.2 Usage of the charger and charging method

(1) Daily charging

When the under voltage warning of the battery displays on the liquid crystal displayer, please charge in time according to the following essentials:

(a) Park the truck at appointed place. Turn the key switch on “OFF” position and connect the battery. When replace the battery, sling it from the truck as rules.

(b) Confirm the input voltage and frequency of the charger, select appropriate the switch socket matched with the battery.

(c) The minimum quantity of electrolyte should be kept, the level of the electrolyte must be higher than guide plate for 15-20mm, or be in the scale range ruled by vent plug.

(d) Correctly connect the plug of the battery with relevant charger.

(e) Turn on the switch, the charger displays system’s version, the voltage of battery and the maximum charging current of charging. The charger begins to give an automatic test.

(f) After testing, the charger enters formal charging procedure, scroll displaying as follows: voltage [＊＊ . ＊U], current [＊＊ . ＊A], charging time [H＊＊ . ＊＊] (indicating ＊＊hour＊＊minute) and ampere-hours charged [＊＊＊AH].

(g) When the full indicator flashes, the battery capacity is full. The charger has entered automatically floating state, at the same time, the floating current of the charger is 1-3A.

(h) After having charged, turn off the switch, disconnect the battery plug from the charger.

(i) Before using the forklift truck, make sure the specific gravity of battery electrolyte has achieved the value as follows:

Temperature of electrolyte	Specific gravity of electrolyte	Temperature of electrolyte	Specific gravity of electrolyte
5℃	1.294	25℃	1.280
15℃	1.287	35℃	1.273

(2) Balanced charging

After the battery fully discharging, measure the specific gravity when charged distilled water, and that of all batteries, then converse the values (setting the temperature 25℃), come out the difference. When the difference is over 0.02, and other performance ruled, balanced charging is necessary. Charging equally according to these procedures:

After operating by the way the same with daily operating, press “balance” charging function button, the “balance” indicator flushes and “—JH—” appears. When the battery is fully charged, press the “balance” button to release. The charger returns to normal condition.

Notice: If charged more frequently, it may lead overcharge and shorten the useful life of battery.

7. Hydraulic system

7.1 General description

The hydraulic system consists of pump, control valve, lift cylinder, tilt cylinder and hydraulic pipes.

The hydraulic oil, supplied by the oil pump connecting with the motor, is distributed to the oil cylinders by the control valve.

Item \ Model		CPDS15	CPDS18
Main pump	Type	Gear type	
	Model	SG05A20L224C	
	Displacement	20 ml/rev	
	Drive	Connect with motor	
Control valve	Type	Plunger piston	
	Model	MSV04	
	Adjusting pressure	14.5 MPa	16 MPa
Lift cylinder	Type	Single action piston type with cut off valve	
	Inner diameter of cylinder	Φ45 mm	
	Outer diameter of piston rod	Φ36 mm	
	Stroke	1495 mm (lift height is 3000mm)	
Tilt cylinder	Type	Dual action piston	
	Inner diameter of cylinder	Φ63mm	
	Outer diameter of piston rod	Φ36mm	
	Stroke	85mm	
Oil tank	Capacity	24L	

7.1.1 Oil pump

Oil pump is gear pump, the type is SG05A20L224C (Chinese brand).

The lift oil pump is driven by lift motor. The oil from pump is distributed into two classes through priority valves. One is for steering unit and another is for control valve.

7.1.2 Control valve

The control valve is of two-spool, four-body type. Controlled by the control valve lever, the hydraulic oil from oil pump distributes the high pressure oil to lift cylinder or tilt cylinder. There are safety valve and self-lock valve in the control valve. Setting on the upper side of control valve inlet, the safety valve can control the system pressure. Setting in the tilting valve, the self-lock valve is used to prevent the serious result's happening because of miss-operating when the tilt cylinder has no pressure source. There is check valve separately between the inlet port and lift valve inlet, between lift valve inlet and tilt valve inlet. See Fig7-1.

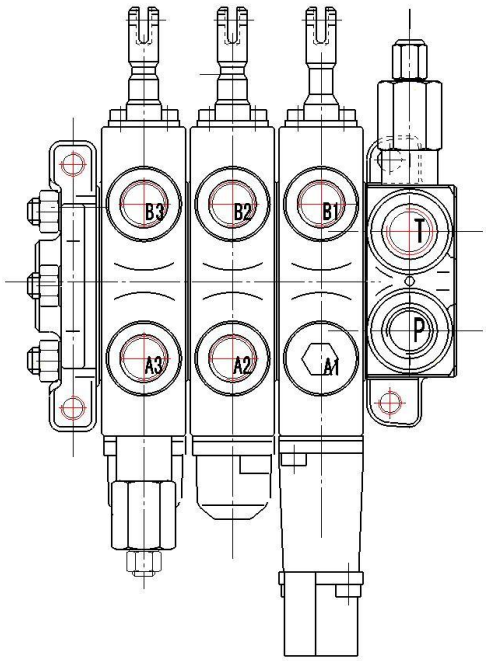

Fig.7-1 Outline of control valve

(1) Spool valve operation (Take the tilt spool valve for example)

(a) Neutral position (Fig7-2)

The high-pressure oil from lift pump returns to the oil tank through the neutral position.

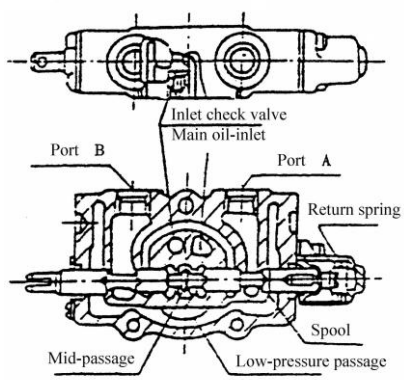

Fig7-2

(b) Pushing-in of spool valve (Fig7-3)

In this time, the spool is pushed in to close the mid-passage. This causes the oil from the main oil-inlet to push up the inlet check valve and to flow into the port “B”. The return oil from the port “A” flows through the low pressure passage to the tank and the spool is restored to its neutral position by the return spring.

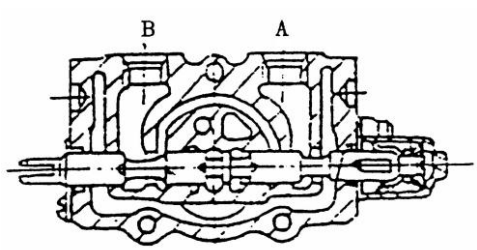

Fig7-3

(c) Drawing-out of spool (Fig7-4)

With the mid-passage closed, the oil from the main oil-inlet pushes up the check valve and flows into the port “A”. The return oil from the port “B” flows through the low-pressure passage to the tank. The spool can be restored to its neutral position by return spring.

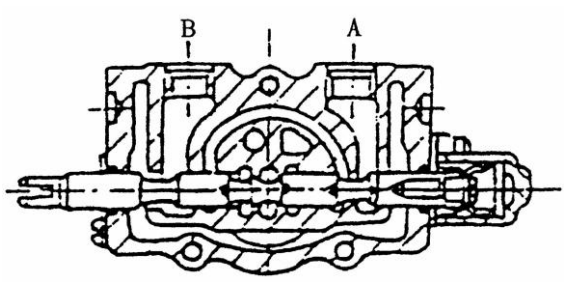

Fig.7-4

(2) Relief valve operation

There is a relief valve between the “HP” port of oil pump and low pressure passage “LP”. The oil through lift valve “C” will act on the surface with diameter “A” and “B”, then the check valve “K” and relief lift valve “D” will fall on the valve seat. See Fig7-5.

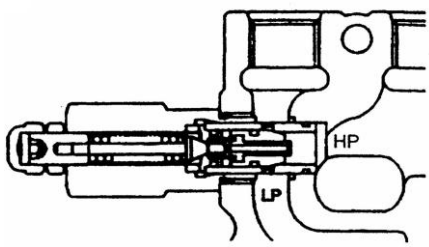

Fig.7-5

When the setting pressure of the HP passage affects the spring of the guide valve, the check valve “E” is being opened. The oil flows into low pressure “LP” through the port. See Fig7-6.

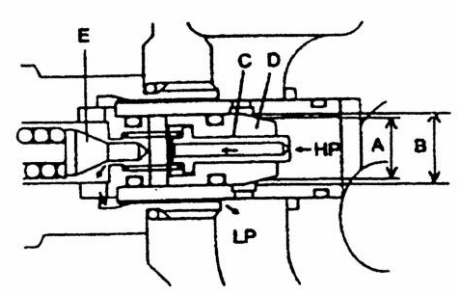

Fig7-6

As the guide valve “E” is opened, the pressure on the inside of the valve “C” decreases, valve “E” and valve “C” both fall on the valve seat, the flow in the back of relief valve “D” will be shut, then the pressure on the inside will be decreased. See Fig7-7.

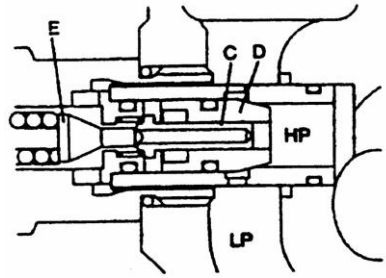

Fig.7-7

As the imbalance pressure between the HP passage and the inside of oil pump, the pressure difference makes the valve “D” open, oil flows directly into the low pressure circuit “LP”. See Fig.7-8.

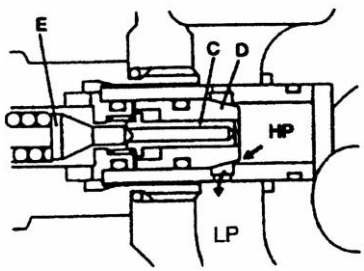

Fig.7-8

(3) Action of tilt-lock valve

Tilt spool valve housing contains a tilt-lock valve. The tilt lock valve is extended to prevent vibrations of the mast tilting from the negative pressure in the tilt cylinder and also to avoid the danger for mishandling of the tilt valve spool. When the lift motor stops running, the mast can’t be tilted forward even pushing the tilt lever.

The flow of the oil when pulling the valve core out is referred to Fig.7-10. At this time, the mast is in backward tilt position.

The following is the situation as pushing in the valve core. (Fig.7-9)

(a) The core valve is pushed in

(When the pump works)

The pressure oil from the main pump flows through the port “B” to tilt cylinder, then effects on the piston through the port ○,P. The oil will go to the low oil passage through port ○,A and ○,B, at last go back to the oil tank.

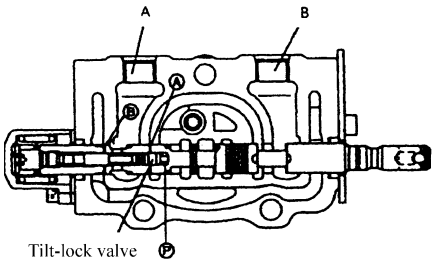

Fig.7-9

(b) The core valve is pushed in

(When the pump stops)

When the pump stops, push the core valve in, without the oil flowing into the oil cylinder connector “B”, then the pressure from port ○,P will not be increased. The piston will not move while the oil from oil cylinder connector “A” can’t go back to the oil tank, then the oil cylinder will stop working.

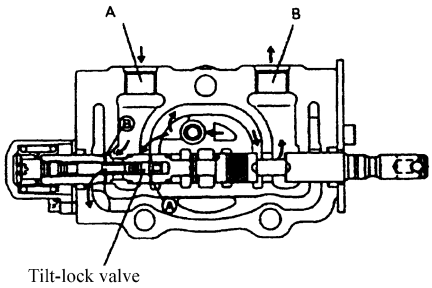

Fig.7-10

(4) Operation of the control valve

The control valve is operated with the valve levers. All valve levers are assembled together with a shaft and the shaft is assembled on the front guard with the bracket. The valve levers operate the control valve with the joints. See Fig. 7-11.

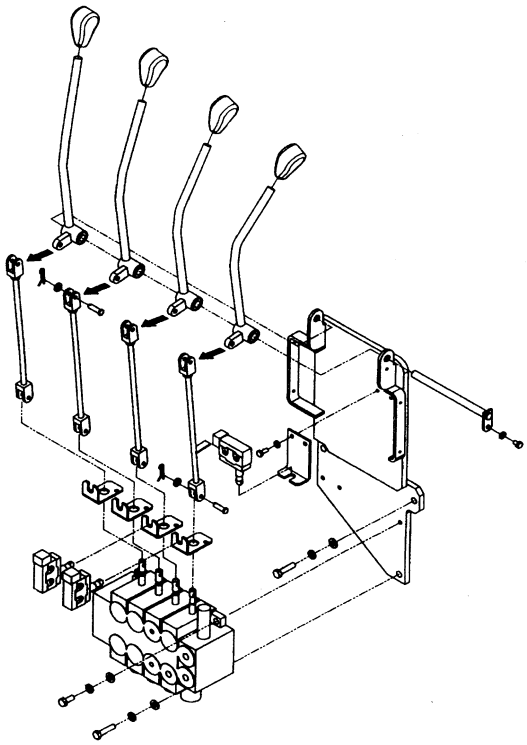

Fig. 7-11 Operation of the control valve

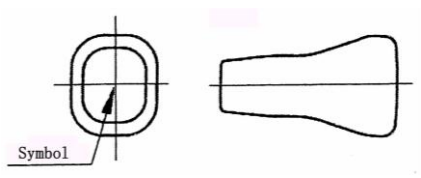

No.	Symbol	Name	No.	Symbol	Name
1		Lift	2	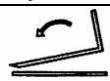	Tilt

Fig.7-12 Symbol of the operation lever

As you see in Fig.7-12, the mast lift up when you push the lift lever forward, the mast fall down when you pull the lift lever backward. The mast tilt forward when you push the tilt lever forward, the mast tilt backward when you pull the tilt lever backward.

(5) Setting pressure of the relief valve

The pressure of the relief valve has been set before delivery. Don't adjust the pressure at will, for it will bring danger for system and safety. If the oil pressure is different with standard value as the following form, according to the measure method specified in JB/T3300, it can be adjusted by specified servicemen as follows:

(a) Screw out the measured hole plug from the inlet port of control valve and install the oil-pressure gauge (20MPa) on it.

(b) Operate the tilt lever, measure the pressure when the stroke is to the bottom.

(c) When the oil pressure is different from the specified value, loosen the lock nut of the surplus valve, adjust the adjusting screw left and right to achieve the specified value. Turn the screw left when pressure is high, and turn right when it is low.

(d) After having adjusted, tighten up the lock nut.

Forklift truck	1.5t	1.8t
Main relief pressure	14.5MPa	16MPa
Steering unit pressure	8MPa	8MPa

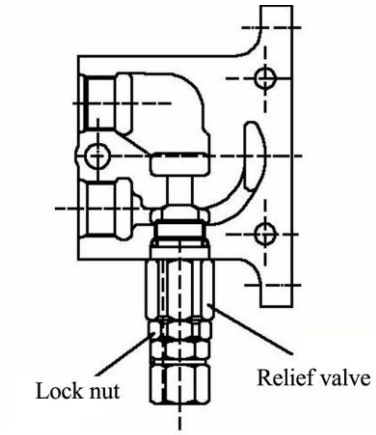

Fig.7-13 Pressure adjusting of relief valve

7.1.3 Lift cylinder

The lift cylinder is of single-action piston type. It consists of primarily of cylinder body, piston rod, piston and cylinder head. The bottom of the cylinder is connected with the cylinder supporter of the outer mast by blots and pins, while its top (i.e. piston rod head) is connected with the upper beam of the outer mast.

The piston, fastened to the piston rod with spring wire is fitted with oil seals and bearings on its outer periphery.

There is a cut-off valve assembled on the bottom of the cylinder, for protecting the cylinder if the high pressure hose is cranked suddenly when lifting the mast.

The bushing and oil seal is set on the cylinder head to support the piston rod and prevent the entering of the dust.

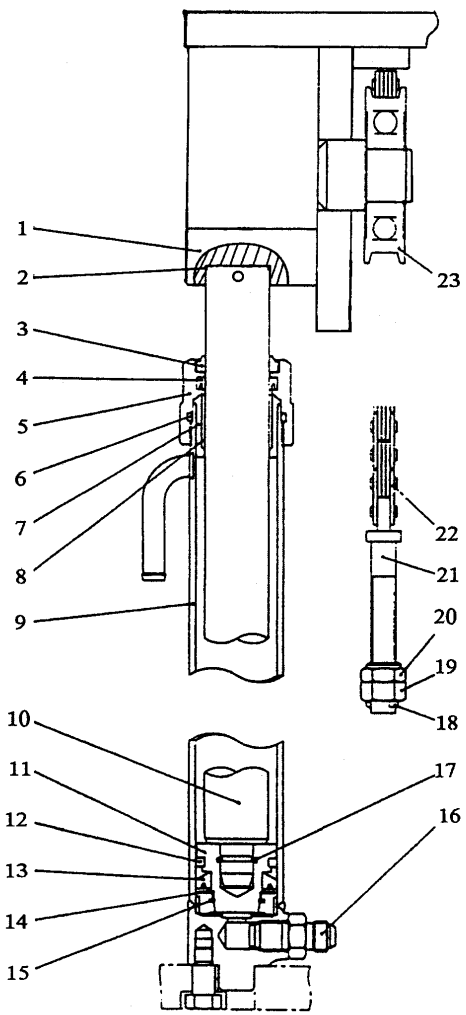

1. Upper beam
2. Adjust shim
3. Dust ring
4. Oil seal
5. Guide sleeve
6. O-ring real
7. Cylinder head
8. Bushing
9. Cylinder body
10. Piston rod
11. Piston
12. Oil seal, piston
13. Oil seal
14. Ring
15. Snap ring
16. Cut-off valve
17. Spring lock ring
18. Cotter pin
19. Lock nut
20. Adjusting nut
21. Joint
22. Chain
23. Chain wheel

Fig.7-14 Lift cylinder

At the bottom of the lift cylinder is a cut-off valve (see Fig.7-15), which operates when the high-pressure hose bursts for any reason to prevent the load from dropping down abruptly. The oil from the lift cylinder flows through small holes in the circumference of the cut-off valve spool and produces a pressure difference between two chambers. As the pressure difference is smaller than the spring force so that the cut-off valve spool won't move. If the high-pressure hose bursts, the pressure difference will be enough to overcome the spring force, causing the spool to move until the holes on the circumference on the spool are blocked up and allowing only a small amount of oil to flow through the holes at the spool end to let the forks descend at the low speed.

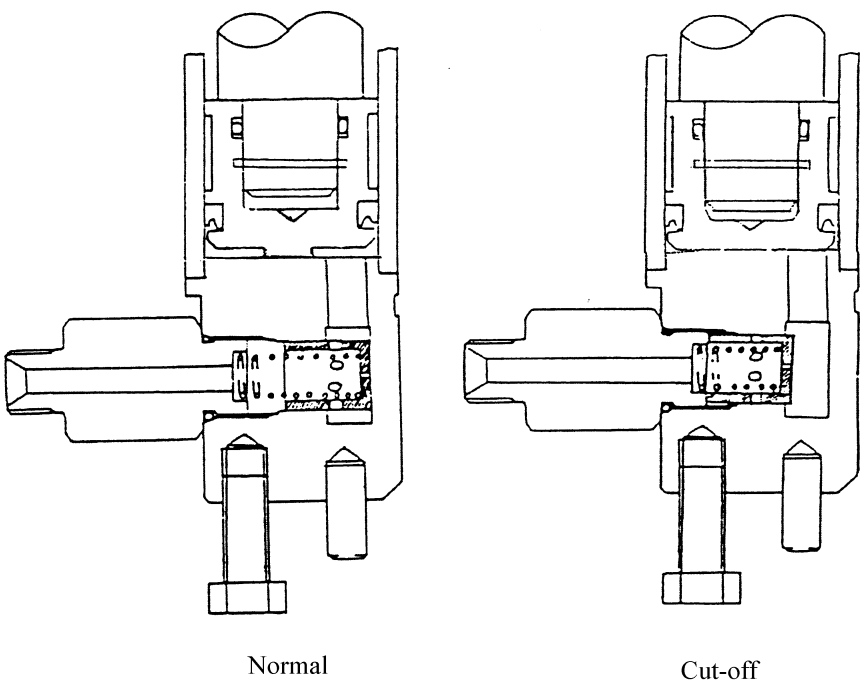

Fig.7-15 Performance of cut-off valve

7.1.4 Flow regulator valve

The flow regulator valve, located in the lift cylinder circuit to limit the descending speed of loaded forks, has the construction as shown in Fig.7-16. When the lift spool is placed in the “lift” position, the oil from the control valve flows through the oil chambers A and B, oil holes C, D, E and F, and the chamber G to the lift cylinder without any regulation. When the lift spool is placed in the “down” position, the oil flows in the reverse direction. When the oil passes the orifice plate (5) and a pressure difference generates between the chambers A and B, the pressure difference overcomes the force of the spring (2) and moves the valve core (7) right, thus the oil flow is decreased by narrowing of the hole D and C, and reduces the oil flow passing through the orifice plate (5).

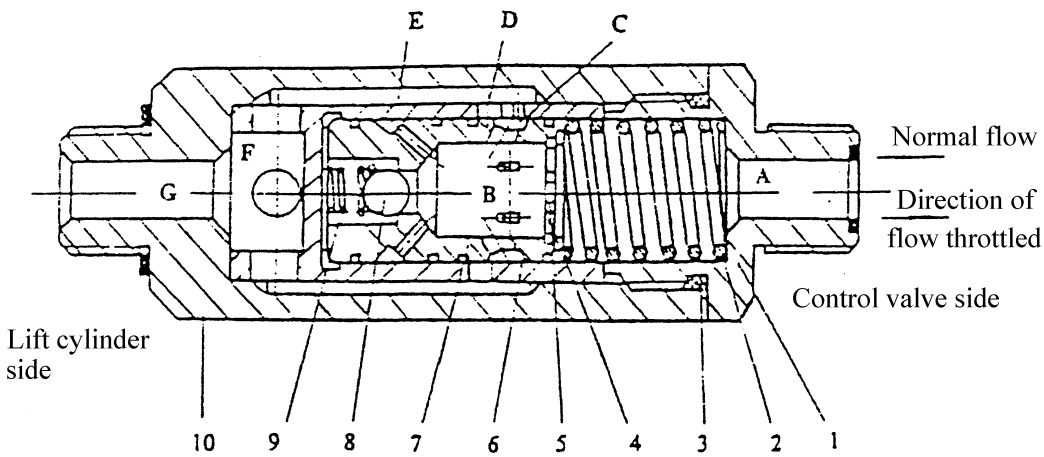

1.	Joint	2.	Spring	3.	O-ring
4.	Snap ring	5.	Orifice plate	6.	Sleeve
7.	Valve core	8.	Ball valve	9.	Spring
10.	Valve body				

Fig.7-16 Flow regulator valve

7.1.5 Tilt cylinder (Fig.7-17)

The tilt cylinder is of double-acting type. Each truck has two tilt cylinders which are installed on two sides of the mast assembly with pin while their piston rod ends are connected with the outer mast channels.

The tilt cylinder assembly consists primarily of piston, piston rod, cylinder body, cylinder base, guide sleeve and seals. The piston, welded to the piston rod, is fitted with two Yx-rings and one wear ring on its circumference. A bushing press-fitted to the inner side of the guide sleeve supports the piston rod. The guide sleeve is fitted with dust seal, snap ring, Yx-ring and O-ring to prevent oil leakage and keep dust off. Fitted with them, the guide sleeve is screwed into the cylinder body.

When the tilt lever is pushed forward, the high-pressure oil enters into the cylinder body from the cylinder tail, moving the piston forward and causing the mast assembly to tilt forward until 5 degrees. When the tilt lever is pulled backward, high-pressure oil enters into the cylinder body from the guided sleeve and moves the piston backward, tilting the mast backward until 7 degrees.

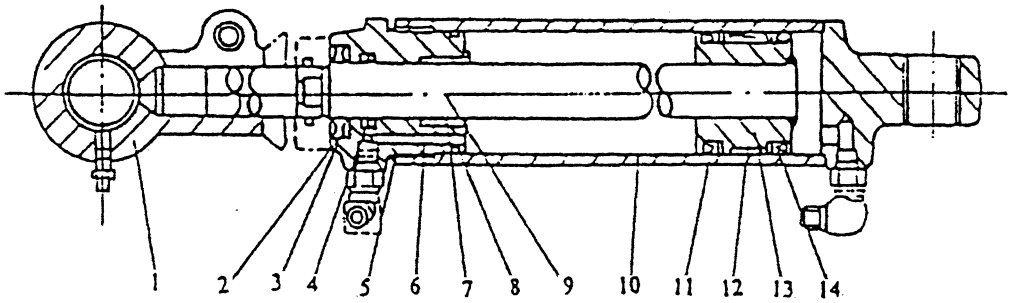

Fig.7-17 Tilt cylinder

1. Ear ring	2. Dust ring	3. Snap ring
4. Yx-ring	5. O-ring	6. Guide sleeve
7. Bearing	8. O-ring	9. Piston rod
10. Cylinder body	11. Yx-sealing	12. Retainer ring
13. Piston	14. Yx-sealing	

7.1.6 Oil tank

For the cleaning oil, there is an inlet filter and a return filter separately in the oil tank and the tube.

7.1.7 Hydraulic oil circuit (See Fig.7-18)

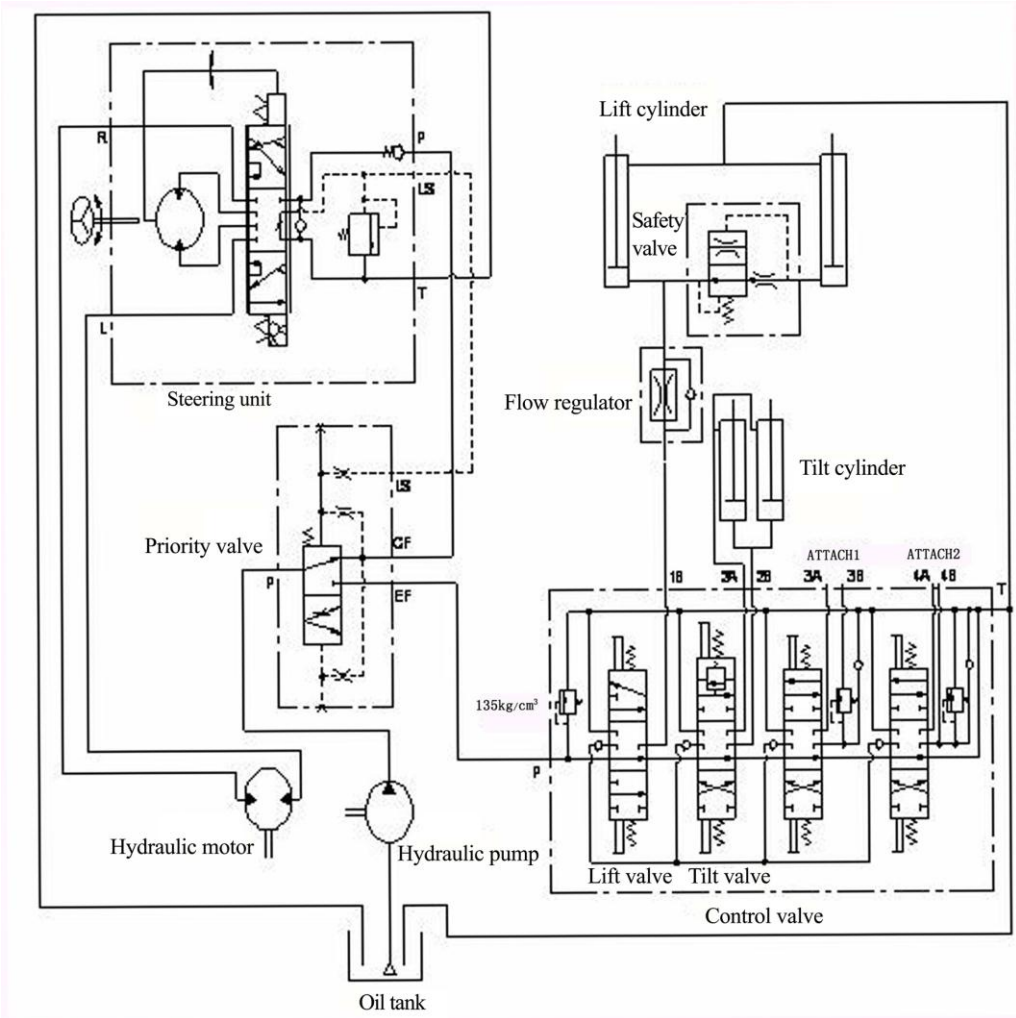

Fig.7-18 Hydraulic oil circuit

Forklift truck	1.5t	1.8t
Main relief pressure	14.5MPa	16MPa
Steering unit pressure	8MPa	8MPa

7.2 Maintenance and adjustment of hydraulic system

7.2.1 Maintenance of gear pump

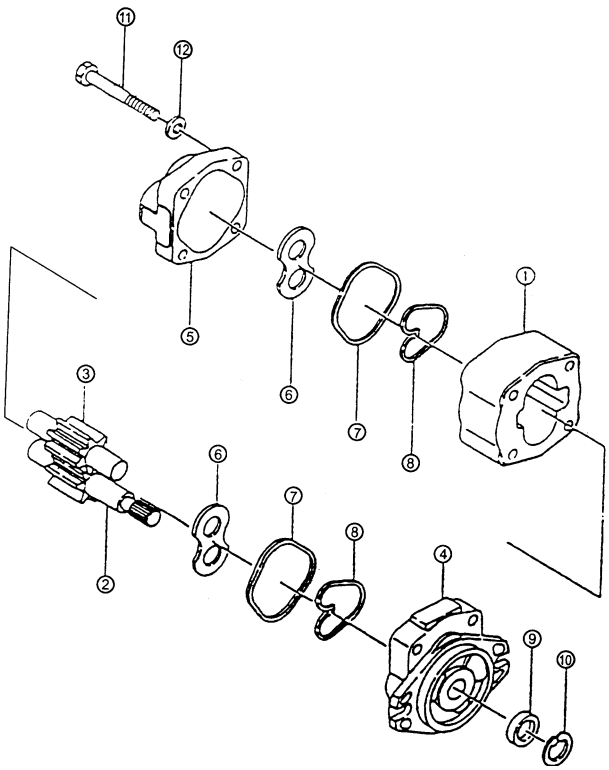

1. Pump body
2. Drive gear
3. Driven gear
4. Front cover
5. Rear cover
6. Lining plate
7. Seal ring
8. Snap ring
9. Oil seal
10. Snap ring
11. Bolt
12. Washer

Fig.7-19 Gear pump

1. Disassembly

Before disassembly the pump, make it clean and put the removed parts on the paper or cloth. Don't damage the parts.

(a) Hold the pump in a vice by lightly clamping the flange section.

(b) Remove bolts ○,11, pump cover ⑤, pump body ①(Fig.7-9).

(c) Remove lining plate ⑥, driving gear ②and driven gear ③.

(d) Remove seal ring ⑦and ring ⑧from the front and rear covers.

Caution: If the seal ring needn't to be replaced, don't remove it from the front cover.

2. Inspection

The disassembled parts except rubber parts should be washed with gasoline.

(a) Pump body inspection (Fig.7-20)

If the scraping trace is up to 1/2 long of the inner periphery, it indicates that the bearing and gear shaft are subject to excessive wear, replace the pump body.

(b) Lining plate inspection (Fig.7-21)

Inspect the contact surface of the lining plate. If the surface is worn or its thickness is smaller than the specified value, replace the lining plate.

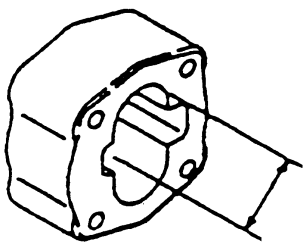

Fig.7-20

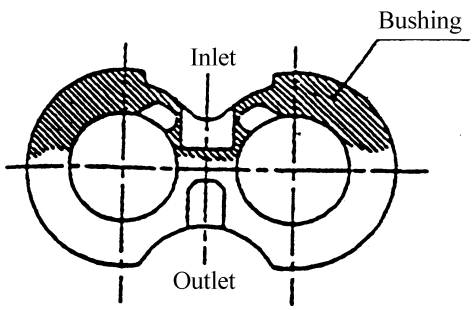

Fig.7-21

(c) Front and rear cover (Fig.7-22)

If the inner surface of bushings discolored over 150°scope, replace.

(d) Inspect the driving gear and the driven gear. If they are worn, replace them. (Fig.7-23)

(e) Replace seal rings, bushing seals, snap rings, oil seals and spring snap rings as require.

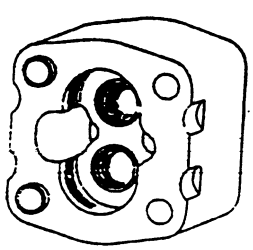

Fig.7-22

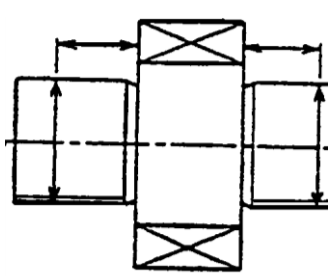

Fig.7-23

3. Assembly

(a) Install a new seal ring and a new ring on the front cover of pump.

(b) Install the lining plate on the groove of the front cover, don't confuse the inlet oil port and the outlet oil port.

(c) Install the driving gear and the driven gear on the front cover.

(d) Install the lining plate on the side of the gear, with groove aiming gear point, don't confuse the inlet oil port and the outlet oil port. (Fig.7-24)

(e) Install a new seal ring and a new ring on the groove of the rear cover. (Fig.7-25)

(f) Install the rear cover on the pump body, don't confuse the inlet oil port and the outlet oil port.

(g) Tighten up the connecting bolts with a specified torque of 9 to 10 kg.m after all.

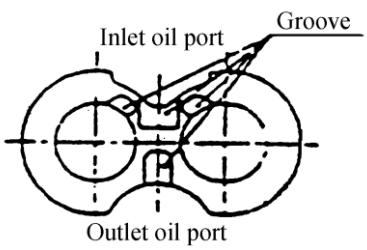

Fig.7-24 Lining plate

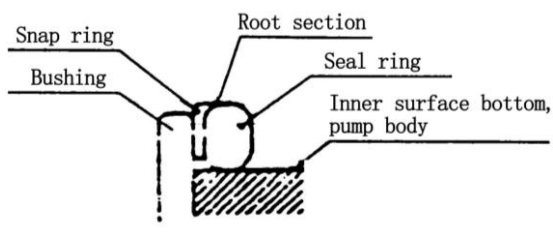

Fig.7-25 Seal

Notice：The maintenance data of oil pump parts may be different because of the difference of manufacturers.

4. Trial run

After installing the gear pump in the truck, check it reassembled for specified performance and do the trial run for it. If the pump's gears are seized or internal parts worn excessively, you should renew the hydraulic oil and filters or clean them. The trial run procedures are as follows:

(a) Install the gear pump in the truck. Then install a pressure gauge in pressure inspection port of the control valve.

(b) Loose the adjustment screw of the relief valve and run the pump at 500 to 1000 rpm for ten minutes. The oil pressure should be lower than 10 kg/cm^2.

(c) Increase the speed of the pump to 1500 to 2000 rpm for ten minutes.

(d) Without the change of the speed in step, increase the pressure to 20 to 30 kg/cm^2 at a time and run the pump for five minutes. Then increase the pressure to 175 kg/cm^2. Each circuit works for five minutes and then renews the return filter.

During the increase of the pressure, observe the change of oil temperature and pump body surface temperature and working voice. If the oil temperature or pump body surface temperature is excessively high, decrease the load to reduce the oil temperature, then go on doing the test.

(e) After the trial run, measure the flow amount through lift speed with the pressure of 175 kg/cm^2 of the relief valve.

7.2.2 Troubleshoot

If the hydraulic system has a fault, find out the possible cause according to the following tables and repair it.

1. Control valve

Problem	Possible cause	Remedy
Lower oil pressure of the lifting oil circuit	Spool is held up	Disassembly and clean
	Oil hole is blocked	Disassembly and clean
Vibrate and the oil pressure rising slowly	Spool is held up	Disassembly and clean
	Exhaust not fully	Exhaust fully
The oil pressure of the steering oil circuit is more than the specified	Spool is held up	Disassembly and clean
	Oil hole is blocked	Disassembly and clean
Lower oil amount	Misadjusted relief valve	Adjust
Noisy control valve	Misadjusted relief valve	Adjust
	Slide surface worn	Replace relief valve
Oil leakage (outside)	O-ring seal aging or broken down	Replace O-ring seal
Lower setting pressure	Spring is worsen	Replace spring
	Valve seat surface is worsen	Adjust or replace relief valve
Oil leakage (inside)	Valve seat surface is worsen	Correct valve seat surface
Higher setting pressure	Valve is held up	Disassembly and clean

2. Gear pump

Problem	Possible cause	Remedy
Less exhausting oil	Lower oil level of oil tank	Add oil up to specified level
	Blocked pipe-line or oil filter	Clean or replace oil
Lower pressure of gear pump	Lining plate, seal ring, bushing seals or snap ring broken down	Replace
	Misadjusted surplus valve	Adjust the pressure of surplus valve to specified value with pressure gauge.
	Air entering into the pump	Retighten loose connections for suction pipe; Add oil into oil tank; Replace oil seal
Noisy gear pump	Worn suction pipe or blocked oil filter	Check pipe or repair filter
	Air entering in resulting from loose suction connections	Retighten the connection
	Too high oil stickiness	Use oil with proper stickiness
	Air bubble in oil	Find out cause and correct
Oil leakage in pump	Oil seal or seal ring broken	Replace
	Pump broken down	Replace

8. Mast system

8.1 General description

The mast system is the type of lifting and descending vertically with rollers of the two-stage. It consists of inner mast, outer mast and lift bracket.

The fork is fastened on the bracket upper beam groove with pin, the fork clearance can be adjusted. The fork and bracket can be exchanged according to the international standard.

Type	Rolling type, J-shaped inner mast, C-shaped outer mast with free lift, 2-stage telescopic mast
Roller	Φ112.3
Side roller	Φ40
Chain wheel	Φ40×Φ95×Φ113
Lifting chain	LH1223, 2×3 combination
Upper roller, outer mast	Φ91.5
Mast lifting system	Hydraulic
Mast tilting device	Hydraulic
Fork clearance adjustment	Manual

8.1.1 Inner and outer masts (Fig.8-1)

The inner and outer masts are welded parts. The bottom of outer mast is connected with the drive axle through supporting. At the outside middle of outer mast, there are tilt cylinder connected with the frame. The mast assembly can be tilt forward and backward by operating the tilt cylinder.

The outer mast is C-shaped cross section, fixed with main rollers and side rollers on the upper part of it.

The inner mast is J-shaped cross section, fixed with main rollers and side rollers at the bottom of it.

The maintenance of the rollers and the side rollers on the inner and outer masts belong to exalted maintenance. Please be careful.

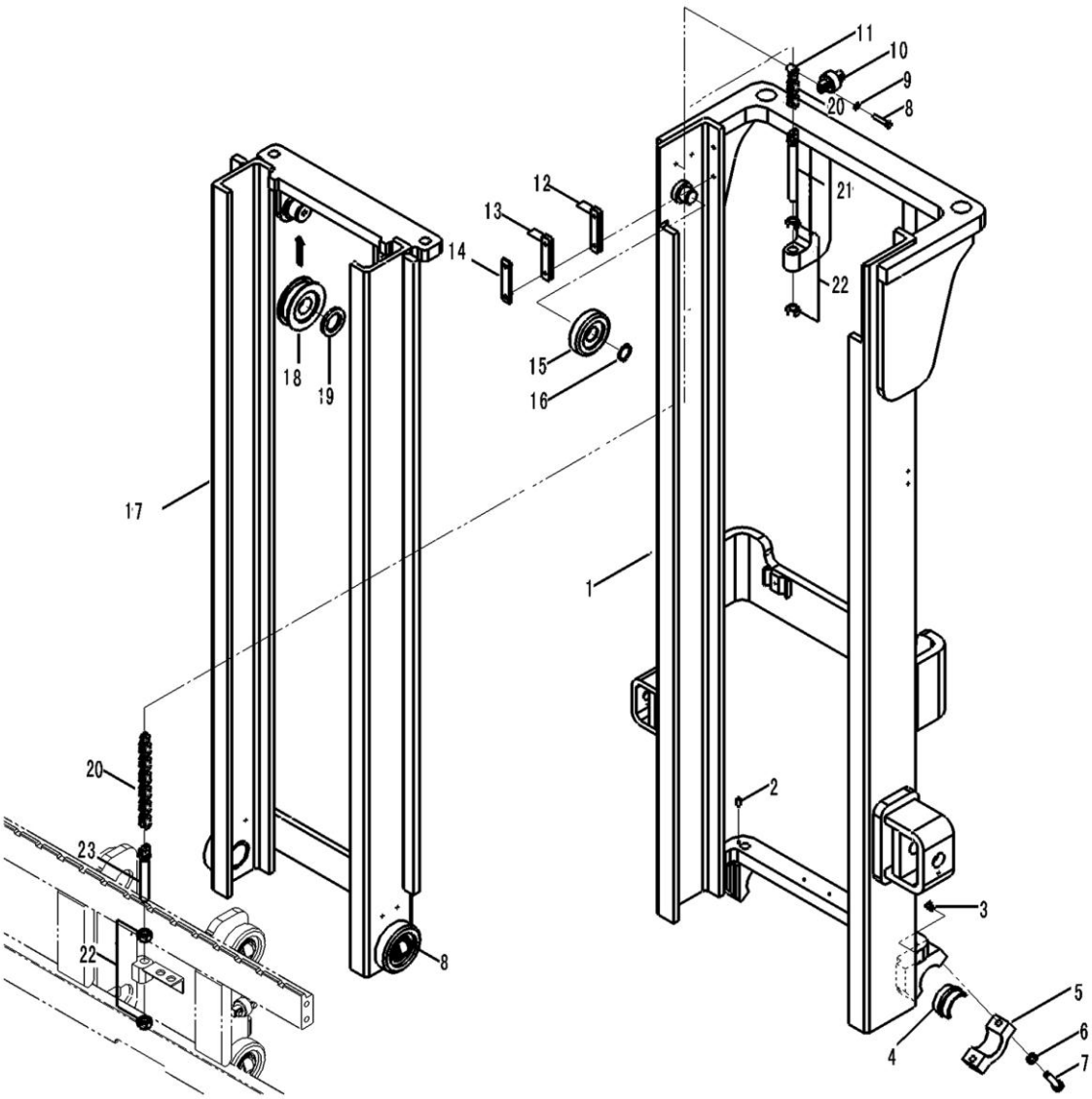

Fig.8-1 Inner and outer mast

1. Outer mast	7. Bolt	13. Adjust gasket	19. Snap ring
2. Pin	8. Bolt	14. Guide plate	20. Chain assy
3. Grease	9. Washer	15. Roller bearing	21. Short bolt
4. Mast bearing	10. Side roller bearing	16. Snap ring	22. Nut
5. Support cover	11. Side roller washer	17. Inner mast	23. Long bolt
6. Washer	12. Adjust gasket	18. Bearing, chain wheel	

8.1.2 Carriage

The carriage moves up and down smoothly along the channel of the inner mast with main rollers. The main rollers are mounted on the main roller shafts and blocked by snap rings. The main roller shafts are welded on the carriage. The side rollers fitted on the carriage with bolts. They roll along the flank plate of the inner mast and can be adjusted by shims. Two fitted side rollers roll along the outside of the flank plate of the inner mast to prevent the rolling clearance. The main rollers sustain the longitudinal loads and the side rollers sustain the transverse loads.

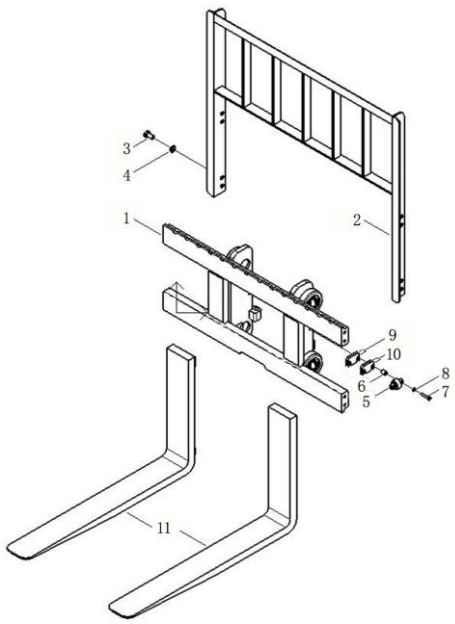

1. Carriage assy
2. Load backrest
3. Bolt
4. Spring washer
5. Side bearing
6. Bushing
7. Bolt
8. Spring washer
9. Shim
10. Shim
11. Fork assy

Fig.8-2 Carriage

8.1.3 Fork pin

The fork pin fastens the fork on the definite position. When adjusting the clearance of the fork, pull the fork pin turn 1/4 circle, the fork clearance must be adjusted according to the loaded goods.

8.1.4 Roller position (Fig.8.3)

There are two kinds of rollers, main roller and side roller. They are separately mounted on the outer mast, inner mast and carriage. The main rollers sustain the loads from front and rear direction while the side rollers sustain the side loads.

Notice: (a) Adjust the clearance of the side rollers to 0.5mm.

(b) Add grease on the surface of the main roller and the mast contact surface.

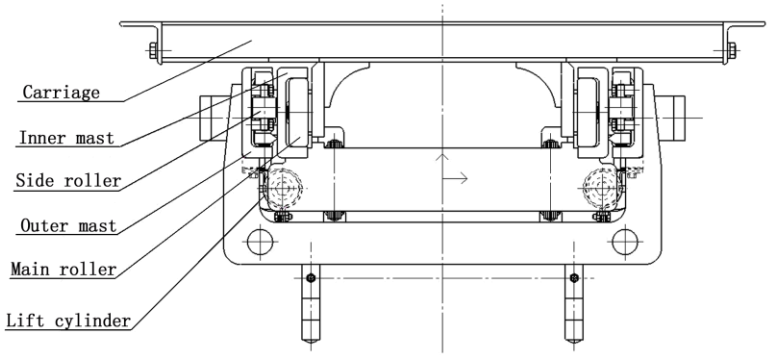

Fig.8-3 Roller position

8.2 Maintenance and adjustment of mast system

8.2.1 Adjustment of lift cylinder

When replace the lift cylinder, inner mast or outer mast, we shall readjust the stroke of the lift cylinder as following.

(1) Install the piston rod in the upper beam of the inner mast without shims.

(2) Lift the mast slowly to the max. stroke of the cylinder and check the two cylinders synchronize or not.

(3) Install shims between the top of the piston rod of the cylinder which stop first and the upper beam of the inner mast (Fig.8-4). The shims are 0.2mm or 0.5mm thick.

(4) Adjust the tightness of lift chains.

The adjustment of lift cylinder also belongs to exalted maintenance. Please be careful.

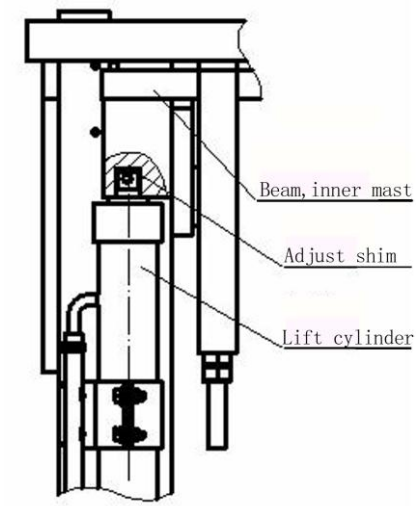

Fig.8-4

8.2.2 Carriage adjustment

(1) Let the truck parking on the horizontal ground and make the mast vertical. See it as Fig.8-5.

(2) Let the bottom of the fork contact with the ground. Adjust the adjusting nut for the end nipple of the upper chain and make a distance A between the main roller and the carriage. A:20～34mm.

(3) Make the fork down to the ground and tilt backward fully. Adjust the adjusting nut for the end nipple of the upper chain and make the two chains' tightness be equal. (Fig.8-6)

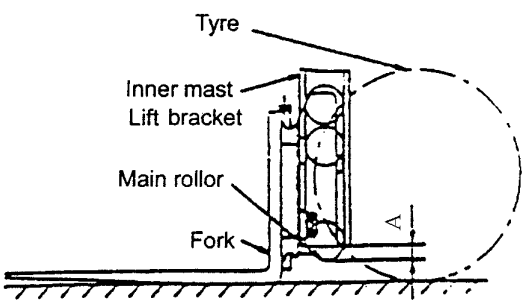

Fig.8-5

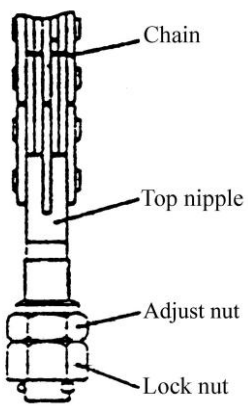

Fig.8-6

8.2.3 Carriage rollers replace

(1) Fork a tray on the fork and let the truck parking on the horizontal ground. (Fig.8-7)

(2) Make the fork and the tray down to the ground.

(3) Disassemble the end nipple of the upper chain and take the chain down from the sheave. (Fig.8-6)

(4) Lift the inner mast. (See Fig.8-7①)

(5) Made the truck back-up if the carriage is fully separated from the outer mast. (See Fig.8-7②)

(6) Replace the main rollers.

· Disassemble all the snap rings and take the main rollers down with a drawing tool and remain the shims.

· Ensure the new rollers are equal to the replaced ones. Install the new rollers inside the carriage and block them with snap rings.

8.2.4 Mast rollers replace

(1) Use the same way as 8.2.3 to disassemble the carriage from the inner mast.

(2) Let the truck parking on the horizontal ground and wedge up the front wheels for 250 to 300mm.

(3) Apply the parking brake and wedge up the rear wheels.

(4) Disassemble the fitted bolts for the lift cylinder and the inner mast. Hang up the inner mast without loosing the shims for the top of the piston rod carefully.

(5) Disassemble the connecting bolts for the lift cylinder and the bottom of the outer mast. Disassemble the lift cylinders and the oil pipes between the two cylinders without loosen the oil pipes' joints.

(6) Put down the inner mast. Disassemble the main rollers under the bottom of the inner mast.

(7) Replace the main rollers

·Disassemble the upper main rollers with a drawing tool, don't loose the shims.

·Install the new rollers and the shims disassembled before.

(8) Hang up the inner mast to let all the rollers go into the mast.

(9) Reassemble the lift cylinder and the carriage.

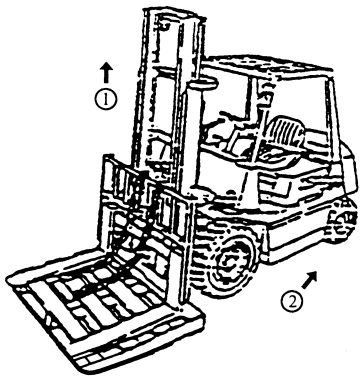

Fig.8-7

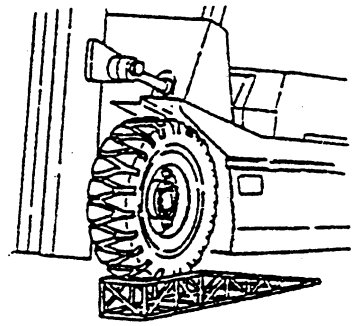

Fig.8-8

Appendix:

Charging record card of electric forklift truck

Model of truck：　　Identification No：　　Date of purchasing：

Model of battery：　　Battery No：　　Date of first using：

Date	Fluid level of electrolyte (Normal / lower)	Density of electrolyte (g/cm^3) (before charge /after charge)	Charging hours (Begin/End)	Voltage (V)	Charged electricity (Ah)	Distilled water (ml)
		/	/			
		/	/			
		/	/			
		/	/			
		/	/			
		/	/			
		/	/			
		/	/			
		/	/			
		/	/			
		/	/			
		/	/			
		/	/			
		/	/			
		/	/			
		/	/			
		/	/			
		/	/			

Density of electrolyte (St)：　It must be charged when the density of electrolyte is lower than 1.160g/cm^3.

S25=St+0.0007(t-25)

S25: The density when the temperature is 25℃

St: The density when the temperature is t℃(measured value)

t: The temperature of liquid (measured value)

Final voltage: about 52V(1-2.5t)　　about 86.8V(3t)

Charged electricity: 130%-150% of battery ration.

Liquid level: Higher than the shield for 15-20mm

Abnormal condition:

Note:

Please copy and fill in this list strictly, it will provide basis for maintenance and service of battery.

https://truckmanualshub.com/

NOTE

https://truckmanualshub.com/

EC DECLARATION OF CONFORMITY

MANUFACTURE

Name: KION Baoli(Jiangsu) Forklift CO., LTD.

Address: No.8 Xinzhou Road, Economic Development Zone, Jingjiang ,Jiangsu, China

Post: 214500 ,Jiangsu, China

THE TECHNICAL DOCUMENTATION WAS COMPILED BY:

Name: Wu,Yun-Cheng

Address: Hoppengarten 19,Germany

Post: 40489 Duesseldorf,Germany

HEREBY DECLARES THAT THE PRODUCT DESCRIBED BELOW:

Description: Industrial truck – Counterbalanced Lift truck

Model:

Serial number:

Manufacturing year:

COMPLIES WITH THE PROVISIONS OF THE FOLLOWING EUROPEAN DIRECTIVES:

2006/42/EC	Machinery Directive
2004/108/EC	EMC Directive
2006/95/EC	LVD Directive

COMPLIES WITH THE PROVISIONS OF THE FOLLOWING HARMONIZED STANDARDS:

EN 1726-1 :1998	Safety of industrial trucks—Self-propelled trucks up to and including 10000 kg capacity and industrial tractors with a drawbar pull up to and including 20000 N
Annex I of Machinery Directive 2006/42/EC	Essential health and safety requirements relating to the design and construction of machinery

Done at: Jingjiang ,Jiangsu, China

Name of the signatory: 陈斌/ChenBin

On : _____

Title: Director of Quality Assurance

Signature: _____

https://truckmanualshub.com/

KION Baoli (Jiangsu) Forklift Co., Ltd.

Service Hotline: 400-828-2789

Tel: +86 523 8461 6148

Fax: +86 523 8461 6126

P.C.: 214500

Add: No. 8 Xinzhou Road·Economic Development Zone·Jingjiang·Jiangsu·China

www.baoli-mh.com

* We reserve the right to make any changes or modifications of pictures and specifications in this manual without giving previous notice and without incurring any obligation.

Edition: MC09-03:2010

https://truckmanualshub.com/

KION Baoli (Jiangsu) Forklift Co., Ltd.

Tel: +86 523 8461 6148

Fax: +86 523 8461 6126

P.C.: 214500

Add: No.8 Xinzhou Road • Economic Development Zone
Jingjiang • Jiangsu • China

www.baoli-mh.com

* We reserve the right to make any changes or modifications in this manual without giving previous notice and without incurring any obligation.

Edition: ME09-02 : 2009