https://truckmanualshub.com/

Operation & Maintenance Manual

EEAM022804

D85EX-15
D85PX-15

BULLDOZER

SERIAL NUMBER
D85EX-15 - 10001 and up
D85PX-15 - 1001 and up

WARNING

Unsafe use of this machine may cause serious injury or death. Operators and maintenance personnel must read this manual before operating or maintaining this machine. This manual should be kept inside the cab for reference and periodically reviewed by all personnel who will come into contact with the machine.

KOMATSU

https://truckmanualshub.com/

https://truckmanualshub.com/

FOREWORD

https://truckmanualshub.com/

FOREWORD

This manual provides rules and guidelines which will help you use this machine safely and effectively. The precautions in this manual must be followed at all times when performing operation and maintenance. Most accidents are caused by the failure to follow fundamental safety rules for the operation and maintenance of machines. Accidents can be prevented by knowing beforehand conditions that may cause a hazard when performing operation and maintenance.

⚠ WARNING

Operators and maintenance personnel must always do as follows before beginning operation or maintenance.

- **Always be sure to read and understand this manual thoroughly before performing operation and maintenance.**
- **Read the safety messages given in this manual and the safety labels affixed to the machine thoroughly and be sure that you understand them fully.**

Keep this manual at the storage location for the Operation and Maintenance Manual given below, and have all personnel read it periodically.

If this manual has been lost or has become dirty and cannot be read, request a replacement manual immediately from Komatsu or your Komatsu distributor.

If you sell the machine, be sure to give this manual to the new owners together with the machine.

Komatsu delivers machines that comply with all applicable regulations and standards of the country to which it has been shipped. If this machine has been purchased in another country or purchased from someone in another country, it may lack certain safety devices and specifications that are necessary for use in your country. If there is any question about whether your product complies with the applicable standards and regulations of your country, consult Komatsu or your Komatsu distributor before operating the machine.

Location to Keep Operation & Maintenance Manual
In Door Pocket Inside of Cab Door

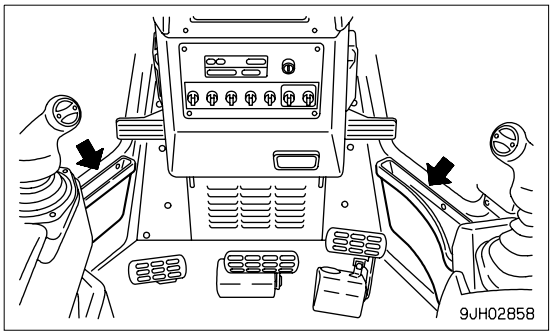

https://truckmanualshub.com/

SAFETY INFORMATION

To enable you to use this machine safely, safety precautions and labels are given in this manual and affixed to the machine to give explanations of situations involving potential hazards and of the methods of avoiding such situations.

Signal words

The following signal words are used to inform you that there is a potential hazardous situation that may lead to personal injury or damage.
In this manual and on machine labels, the following signal words are used to express the potential level of hazard.

DANGER	Indicates an imminently hazardous situation which, if not avoided, will result in death or serious injury.
WARNING	Indicates a potentially hazardous situation which, if not avoided, could result in death or serious injury.
CAUTION	Indicates a potentially hazardous situation which, if not avoided, may result in minor or moderate injury. This word is used also to alert against unsafe practices that may cause property damage.

Example of safety message using signal word

WARNING

When standing up from the operator's seat, always place the safety lock lever in the LOCK position.
If you accidentally touch the control levers when they are not locked, this may cause a serious injury or death.

Other signal words

In addition to the above, the following signal words are used to indicate precautions that should be followed to protect the machine or to give information that is useful to know.

NOTICE	This word is used for precautions that must be taken to avoid actions which could shorten the life of the machine.
REMARKS	This word is used for information that is useful to know.

https://truckmanualshub.com/

- Safety labels

Safety labels are affixed to the machine to inform the operator or maintenance worker on the spot when carrying out operation or maintenance of the machine that may involve hazard.
This machine uses “Safety labels using words“ and “Safety labels using pictograms“ to indicate safety procedures.

Example of safety label using words

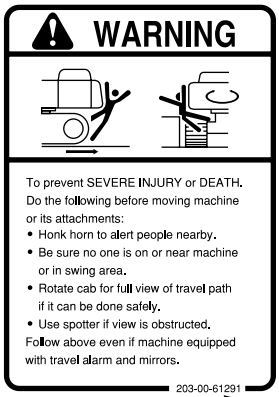

Part No.

Safety labels using pictogram

Safety pictograms use a picture to express a level of hazardous condition equivalent to the signal word. These safety pictograms use pictures in order to let the operator or maintenance worker understand the level and type of hazardous condition at all times. Safety pictograms show the type of hazardous condition at the top or left side, and the method of avoiding the hazardous condition at the bottom or right side. In addition, the type of hazardous condition is displayed inside a triangle and the method of avoiding the hazardous condition is shown inside a circle.

Part No

Komatsu cannot predict every circumstance that might involve a potential hazard in operation and maintenance. Therefore, the safety messages in this manual and on the machine may not include all possible safety precautions.
If any procedures or actions not specifically recommended or allowed in this manual are used, it is your responsibility to take the necessary steps to ensure safety.
In no event should you engage in prohibited uses or actions described in this manual.

The explanations, values, and illustrations in this manual were prepared based on the latest information available at that time. Continuing improvements in the design of this machine can lead to changes in detail which may not be reflected in this manual. Consult Komatsu or your Komatsu distributor for the latest available information of your machine or for questions regarding information in this manual.

The numbers in circles in the illustrations correspond to the numbers in ( ) in the text. (For example: ① -> (1))

https://truckmanualshub.com/

Noise emission levels

Two labels indicating the machine noise level are affixed on the machine.

- Sound pressure level at the operator's station, measured according to ISO6396 (Dynamic test method, simulated working cycle)

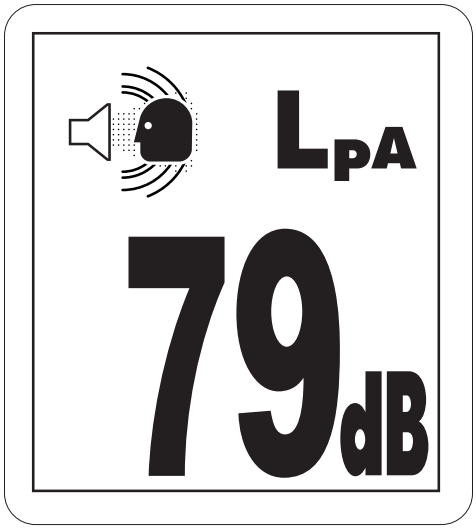

- Sound power level emitted by the machine, measured according to ISO 6395 (Dynamic test method, simulated working cycle). This is the guaranteed value as specified in European directive 2000/14/EC.

Vibration levels

When used for its intended purpose, levels of vibration for the earth-moving machine transmitted from the operator’s seat are lower than or equal to the tested vibrations for the relative machinery class in compliance with ISO 7096.

- If equipped with air suspension seat

The actual acceleration value for the hands and arms is less than or equal to 2.5 m/s². The actual acceleration value for the body is less than or equal to 0.5 m/s².

- If equipped with mechanical suspension seat

The actual acceleration value for the hands and arms is less than or equal to 2.5 m/s². The actual acceleration value for the body is 0.52 m/s².

These values were determined using a representative machine and measured during the typical operating condition indicated below according to the measurement procedures that are defined in the standards ISO 2631/1 and ISO 5349.

https://truckmanualshub.com/

Operating condition:

(WHEEL LOADER:) V-shape loading

(HYDRAULIC EXCAVATORS:) Excavating (Digging-loading-rotating-unloading-rotating)

(TRACTOR DOZER:) Dozing and spreading material through forward/reversing motion

(Rigid/Articulate dumper:) Work cycle (including waiting, travelling, loading, travelling with load, unloading, and travelling without load)

Guide to Reduce Vibration Levels on Machine

The following guides can help an operator of this machine to reduce the whole body vibration levels:

1. Use the correct equipment and attachments.

2. Maintain the machine according to this manual
   - Tire pressures (for wheeled machines), tension of crawler (for crawler machines)
   - Brake and steering systems
   - Controls, hydraulic system and linkages

3. Keep the terrain where the machine is working and traveling in good condition
   - Remove any large rocks or obstacles
   - Fill any ditches and holes
   - Site manager should provide machine operators with machine and schedule time to maintain terrain conditions

4. Use a seat that meets ISO 7096 and keep the seat maintained and adjusted
   - Adjust the seat and suspension for the weight and size of the operator
   - Wear seat belt
   - Inspect and maintain the seat suspension and adjustment mechanisms

5. Steer, brake, accelerate, shift gears (for wheeled machines), and move the attachment levers and pedals slowly so that the machine moves smoothly

6. Adjust the machine speed and travel path to minimize the vibration level
   - When pushing with bucket or blade, avoid sudden loading; load gradually
   - Drive around obstacles and rough terrain conditions
   - Slow down when it is necessary to go over rough terrain
   - Make the curve radius of traveling path as large as possible
   - Travel at low speed when traveling around sharp curves

7. Minimize vibrations for long work cycle or long distance traveling
   - Reduce speed to prevent bounce
   - Transport machines long distances between worksites

8. The following guidelines can be effective to minimize risks of low back pain
   - Operate the machine only when you are in good health.
   - Provide breaks to reduce long periods of sitting in the same posture
   - Do not jump down from the cab or machine
   - Do not repeatedly handle and lift loads

https://truckmanualshub.com/

INTRODUCTION

This Komatsu machine is designed to be used mainly for the following work:

- Dozing
- Cutting into hard or frozen ground or ditching
- Felling trees, removing stumps
- Pushing
- Ripping

For further details, see “WORK POSSIBLE USING BULLDOZER (3-92)“.

FRONT/REAR, LEFT/RIGHT DIRECTIONS OF MACHINE

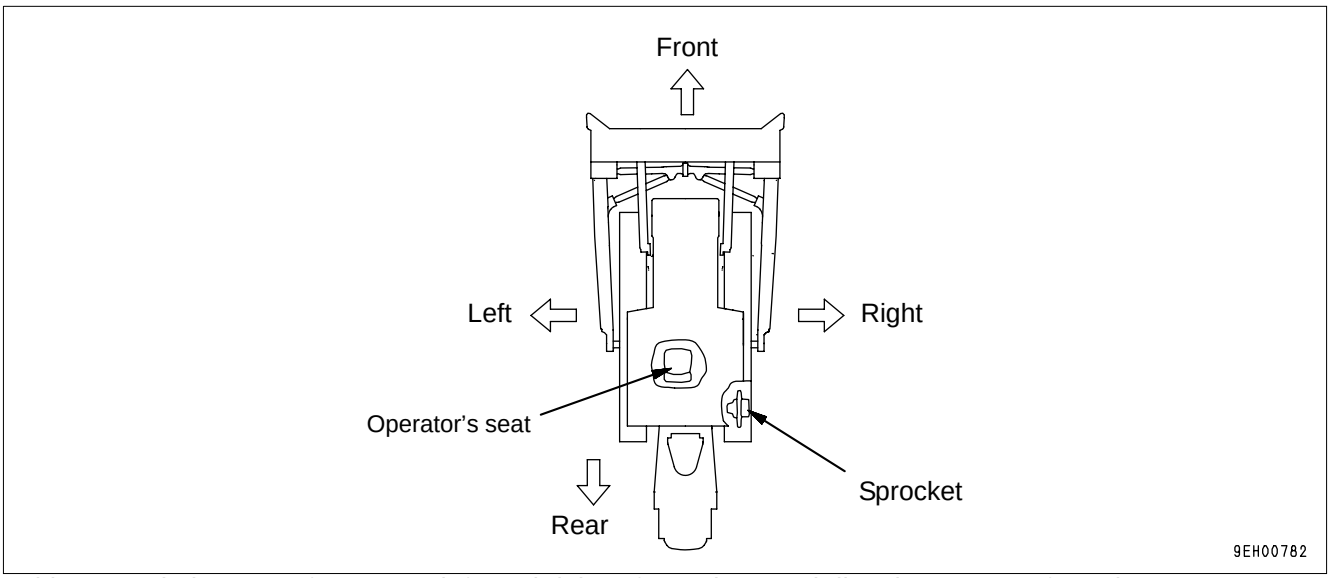

In this manual, the terms front, rear, left, and right refer to the travel direction as seen from the operator's seat when the operator's seat is facing the front and the sprocket is at the rear of the machine.

https://truckmanualshub.com/

NECESSARY INFORMATION

When requesting service or ordering replacement parts, please inform your Komatsu distributor of the following items.

MACHINE SERIAL NO. PLATE AND POSITION

Under the front of the console box on the right side of the operator's seat.

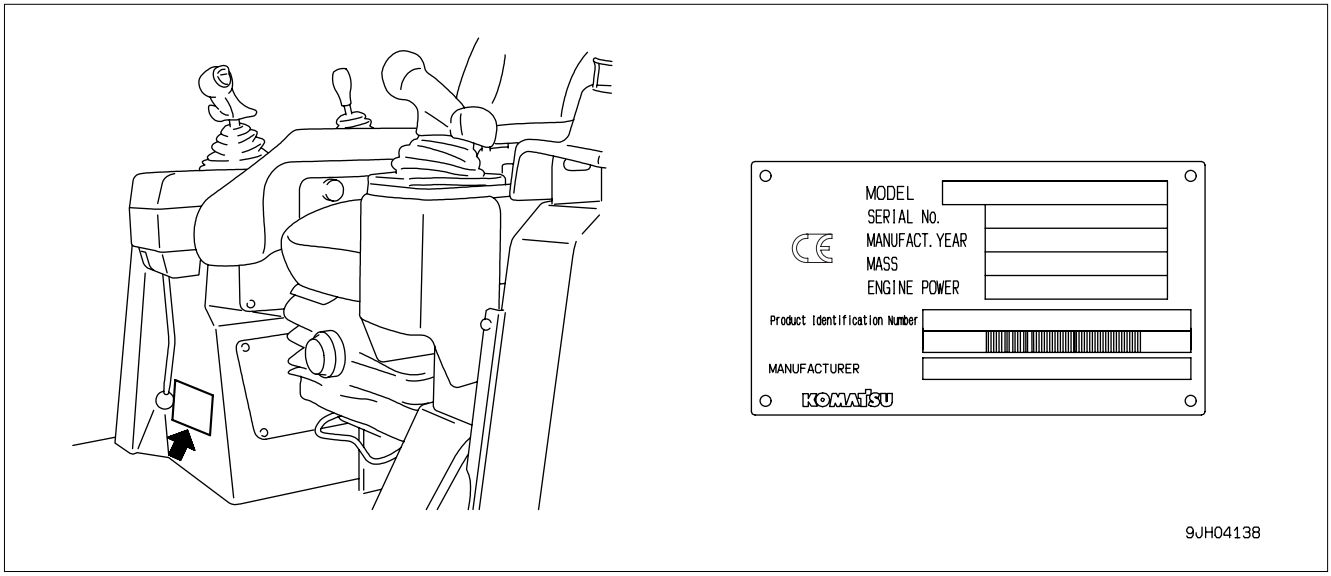

ENGINE SERIAL NO. PLATE AND POSITION

This is at the rear of the starting motor on the rights side of the engine.
(The EMISSION CONTROL INFORMATION LABEL is at the front surface of the engine oil filler on the left side of the engine.)

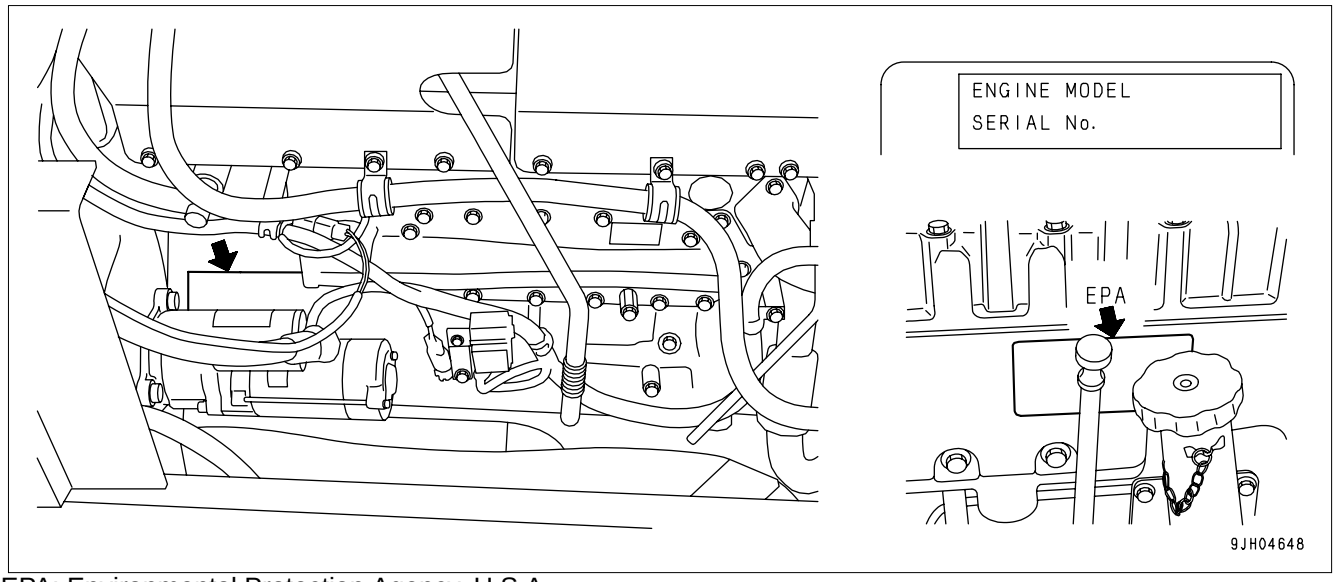

EPA: Environmental Protection Agency, U.S.A.

https://truckmanualshub.com/

BLADE SERIAL NO. PLATE POSITION

This is located at the upper right of blade back surface.

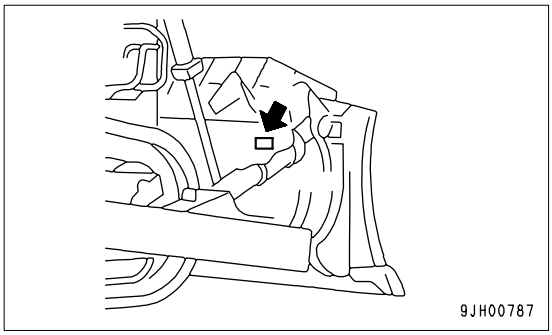

RIPPER SERIAL NO. PLATE POSITION

This is located at the left side surface of ripper beam.

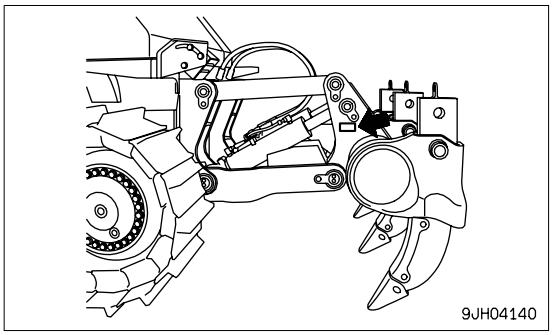

ROPS, FOPS NO. PLATE POSITION

This is located at the top left.

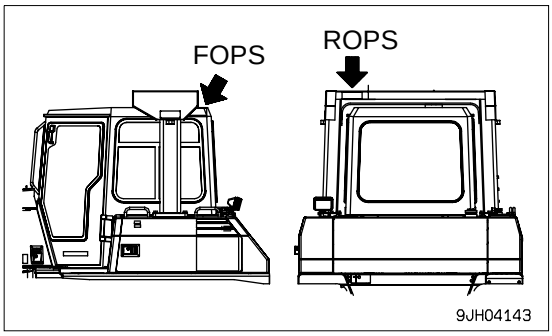

POSITION OF SERVICE METER

On top of the machine monitor

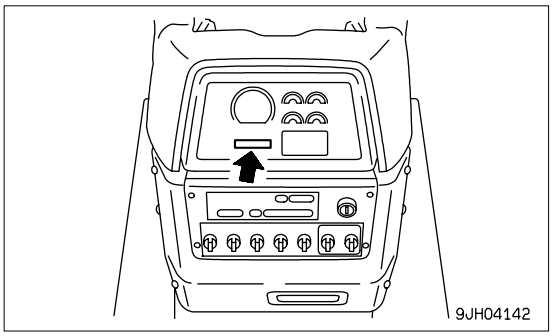

https://truckmanualshub.com/

TABLE OF ENTER SERIAL NO. AND DISTRIBUTOR

Machine serial No.	
Engine serial No.	
Product Identification Number	
Manufacturers name: Address:	KOMATSU LTD. 3-6 Akasaka Minato-ku, 101 Tokyo Japan
Distributor Address Phone Service personnel for your machine:	

https://truckmanualshub.com/

MACHINE SERIAL NUMBER PLATE

Valid until 31 December 2003

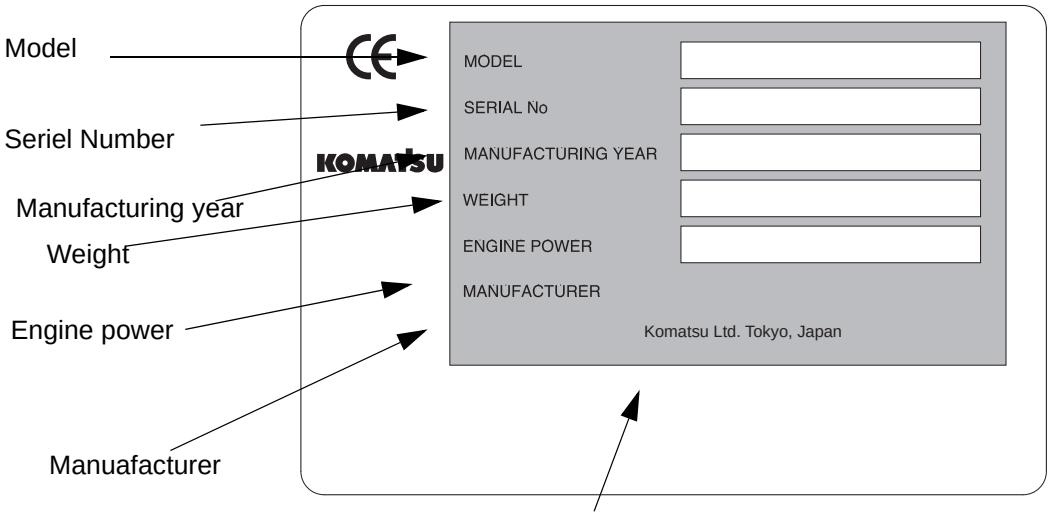

Produced by Komatsu Tokyo, Japan

Valid as of 1 January 2004

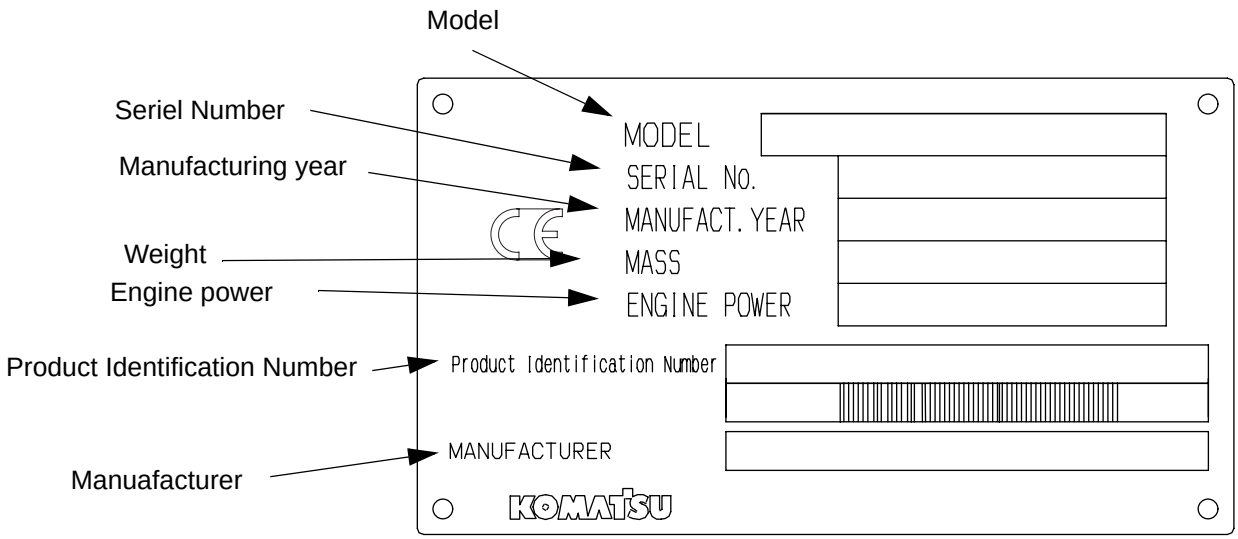

https://truckmanualshub.com/

CONTENTS

FOREWORD

FOREWORD 1-2

SAFETY INFORMATION 1-3
- Noise emission levels 1-5
- Vibration levels 1-5
  - Guide to Reduce Vibration Levels on Machine 1-6

INTRODUCTION 1-7
- FRONT/REAR, LEFT/RIGHT DIRECTIONS OF MACHINE 1-7

NECESSARY INFORMATION 1-8
- MACHINE SERIAL NO. PLATE AND POSITION 1-8
- ENGINE SERIAL NO. PLATE AND POSITION 1-8
- BLADE SERIAL NO. PLATE POSITION 1-9
- RIPPER SERIAL NO. PLATE POSITION 1-9
- ROPS, FOPS NO. PLATE POSITION 1-9
- POSITION OF SERVICE METER 1-9
- TABLE OF ENTER SERIAL NO. AND DISTRIBUTOR 1-10
- MACHINE SERIAL NUMBER PLATE 1-11

SAFETY

SAFETY 2-2

SAFETY LABELS 2-4
- POSITIONS OF SAFETY PICTOGRAMS 2-4
- SAFETY LABELS 2-5

GENERAL PRECAUTIONS 2-9

PRECAUTIONS FOR OPERATION 2-16
- BEFORE STARTING ENGINE 2-16
- OPERATION 2-17
- TRANSPORTATION 2-20
- BATTERY 2-20
- TOWING 2-22

PRECAUTIONS FOR MAINTENANCE 2-23

OPERATION

GENERAL VIEW 3-2

https://truckmanualshub.com/

GENERAL VIEW OF MACHINE 3-2
GENERAL VIEW OF CONTROLS AND GAUGES 3-3

EXPLANATION OF COMPONENTS 3-5
FRONT PANEL 3-5
CHECK MONITOR GROUP 3-7
CAUTION MONITOR GROUP 3-8
EMERGENCY CAUTION ITEMS 3-10
METER GROUP 3-12
SWITCH 3-16
LAMP 3-19
METHOD OF USING DISPLAY PANEL B (Multi-information) 3-21
SWITCH 3-28
CONTROL LEVERS, PEDALS 3-31
DUST INDICATOR 3-36
FUSE BOX 3-37
CIRCUIT BREAKER 3-38
FUSE CAPACITY AND NAME OF CIRCUIT 3-38
FUSIBLE LINK 3-39
DOOR OPEN LOCK 3-40
SASH GLASS INTERMEDIATE LOCK 3-40
DOOR POCKET 3-41
ASHTRAY 3-41
CAR STEREO, HANDLING 3-42
EXPLANATION OF COMPONENTS 3-42
METHOD OF OPERATION 3-47
PRECAUTION WHEN USING 3-49
AIR CONDITIONER 3-50
GENERAL LOCATIONS AND FUNCTION OF CONTROL PANEL 3-50
METHOD OF OPERATION 3-52
PRECAUTIONS WHEN USING 3-53
SET SO THAT COLD AIR DOES NOT DIRECTLY BLOW ONTO THE GLASS SURFACE 3-53
CHECKS DURING OFF-SEASON 3-53
PROCEDURE FOR REPLACING RECEIVER 3-53
CHECK COMPRESSOR BELT TENSION AND REFRIGERANT (GAS) LEVEL 3-54
CLEANING AIR FILTER 3-54
ACCUMULATOR, HANDLING 3-54
METHOD OF RELEASING PRESSURE IN OPERATING CIRCUIT ON MACHINE EQUIPPED WITH ACCUMULATOR 3-54

OPERATION 3-55
CHECK BEFORE STARTING ENGINE, ADJUST 3-55
WALK-AROUND CHECK 3-55
CHECK BEFORE STARTING 3-56
ADJUSTMENT 3-65
OPERATIONS AND CHECKS BEFORE STARTING ENGINE 3-69
STARTING ENGINE 3-71
NORMAL STARTING 3-71

https://truckmanualshub.com/

STARTING IN COLD WEATHER 3-72
OPERATIONS AND CHECKS AFTER STARTING ENGINE 3-75
BREAKING IN THE MACHINE 3-75
NORMAL OPERATION 3-75
IN COLD AREAS 3-77
STOPPING ENGINE 3-78
CHECK AFTER STOPPING ENGINE 3-78
MOVING MACHINE OFF 3-79
STOPPING MACHINE 3-81
SHIFTING GEAR 3-82
SHIFTING BETWEEN FOEWARD AND REVERSE 3-84
STEERING MACHINE 3-86
NORMAL TURNING 3-86
TURNING WHILE DESCENDING A SLOPE 3-87
PRECAUTIONS FOR OPERATION 3-88
PAY ATTENTION TO GAUGES 3-88
PERMISSIBLE WATER DEPTH 3-88
PRECAUTIONS WHEN TRAVELING UP OR DOWN HILLS 3-88
PRECAUTIONS ON SLOPE 3-88
METHOD OF USING BRAKES 3-88
PROHIBITED TO KEEP THE DOOR OPEN DURING OPERATIONS 3-89
IT IS PROHIBITED TO MODIFY THE CAB GLASS IN ANY WAY THAT WILL OBSTRUCT THE VIEW 3-89
PRECAUTIONS FOR BLIND SPOTS CAUSED BY CAB STAY AND ROPS STAY 3-89
PARKING MACHINE 3-89
CHECK AFTER FINISHING WORK 3-91
LOCKING 3-91
WORK POSSIBLE USING BULLDOZER 3-92
DOZING 3-92
CUTTING INTO HARD OR FROZEN GROUND OR DITCHING 3-92
FELLING TREES, REMOVING STUMPS 3-92
PUSHER OPERATIONS 3-92
SMOOTHING 3-93
ADJUSTING POSTURE OF WORK EQUIPMENT 3-94
BLADE ADJUSTMENT 3-94
However, the more the digging angle is changed, the more the change becomes in the amount of tilt on the left and right sides provided by the tilt cylinder. 3-95
ADJUSTING RIPPER 3-96
TIPS FOR LONGER UNDERCARRIAGE LIFE 3-98
OPERATION METHOD 3-98
INSPECTION AND ADJUSTING 3-98
INSPECTION AND REPAIR 3-99

TRANSPORTATION 3-100
TRANSPORTATION PROCEDURE 3-100
LOADING, UNLOADING WORK 3-100
PRECAUTIONS FOR LOADING 3-100
METHOD OF LIFTING MACHINE 3-101

https://truckmanualshub.com/

PRECAUTIONS FOR TRANSPORTATION 3-102
TRAVELING ON ROADS 3-102
REMOVAL OF CAB 3-102
INSTALLATION OF CAB 3-103
INSTALLATION OF ROPS 3-103

COLD WEATHER OPERATION 3-104
PRECAUTIONS FOR LOW TEMPERATURE 3-104
FUEL AND LUBRICANTS 3-104
COOLANT 3-104
BATTERY 3-104
AFTER COMPLETION OF WORK 3-105
AFTER COLD WEATHER 3-105

LONG-TERM STORAGE 3-106
BEFORE STORAGE 3-106
DURING STORAGE 3-106
AFTER STORAGE 3-106

TROUBLESHOOTING 3-107
AFTER RUNNING OUT OF FUEL 3-107
PROCEDURE FOR BLEEDING AIR 3-107
METHOD OF TOWING MACHINE 3-108
IF BATTERY IS DISCHARGED 3-109
STARTING ENGINE WITH BOOSTER CABLE 3-109
OTHER TROUBLE 3-112
ELECTRICAL SYSTEM 3-112
MONITOR PANEL 3-113
CHASSIS 3-114
ENGINE 3-116

MAINTENANCE

GUIDES TO MAINTENANCE 4-2

OUTLINES OF SERVICE 4-5
HANDLING OIL, FUEL, COOLANT, AND PERFORMING OIL CLINIC 4-5
OIL 4-5
FUEL 4-5
COOLANT 4-5
GREASE 4-6
CARRYING OUT KOWA (Komatsu Oil Wear Analysis) 4-6
STORING OIL AND FUEL 4-7
FILTERS 4-7
OUTLINE OF ELECTRIC SYSTEM 4-7

WEAR PARTS LIST 4-8
WEAR PARTS LIST 4-8

https://truckmanualshub.com/

USE OF FUEL, COOLANT AND LUBRICANTS ACCORDING TO AMBIENT TEMPERATURE 4-9
PROPER SELECTION OF FUEL, COOLANT AND LUBRICANTS 4-9

STANDARD TIGHTENING TORQUES FOR BOLTS AND NUTS 4-13
TORQUE LIST 4-13

PERIODIC REPLACEMENT OF SAFETY CRITICAL PARTS 4-14
SAFETY CRITICAL PARTS 4-15

MAINTENANCE SCHEDULE CHART 4-17
MAINTENANCE SCHEDULE CHART 4-17
INTIAL 250 HOURS SERVICE(ONLY AFTER THE FIRST 250 HOURS) 4-17
WHEN REQUIRED 4-17
CHECK BEFORE STARTING 4-17
EVERY 250 HOURS SERVICE 4-17
EVERY 500 HOURS SERVICE 4-17
EVERY 1000 HOURS SERVICE 4-18
EVERY 2000 HOURS SERVICE 4-18
EVERY 4000 HOURS SERVICE 4-18
EVERY 8000 HOURS SERVICE 4-18

SERVICE PROCEDURE 4-19
INITIAL 250 HOURS SERVICE(ONLY AFTER THE FIRST 250 HOURS) 4-19
WHEN REQUIRED 4-19
CHECK BEFORE STARTING 4-37
EVERY 250 HOURS SERVICE 4-38
EVERY 500 HOURS SERVICE 4-45
EVERY 1000 HOURS SERVICE 4-49
EVERY 2000 HOURS SERVICE 4-53
EVERY 4000 HOURS SERVICE 4-58
EVERY 8000 HOURS SERVICE 4-61

SPECIFICATIONS

SPECIFICATIONS 5-2

ATTACHMENTS, OPTIONS

GENERAL PRECAURIONS 6-2
PRECAUTIONS RELATED TO SAFETY 6-2

SELECTION OF TRACK SHOE 6-3
SELECTION OF TRACK SHOES 6-3

PROCEDURE FOR SELECTING RIPPER POINT 6-4
PROCEDURE FOR SELECTING RIPPER POINT 6-4

https://truckmanualshub.com/

CAP WITH LOCK, HANDLING 6-5
METHOD OF OPENING AND CLOSING CAP WITH LOCK..... 6-5

INDEX

COLOPHON

https://truckmanualshub.com/

https://truckmanualshub.com/

SAFETY

⚠ WARNING

Please be sure that you fully understand this manual and the precautions discribed in this manual and the safety labels on the machine. When operating or servicing the machine, always follow these precaustions strictly.

https://truckmanualshub.com/

SAFETY

Safety Labels 2-4
Positions of Safety Pictograms 2-4
Safety Labels 2-5

General Precautions
Safety Rules 2-9
If Abnormalities Are Found 2-9
Clothing and Personal Protective Items 2-9
Fire Extinguisher and First Aid Kit 2-9
Fafety Features 2-9
Keep Machine Clean 2-9
Inside Operator's Compartment 2-10
Always Apply Lock When Leaving Operator's Seat 2-10
Handrails and Steps 2-11
Mounting and Dismounting 2-11
No People on Attachments 2-11
Prevention of Burns 2-12
Fire Prevention 2-12
Action If Fire Occurs 2-13
Window Washer Liquid 2-13
Pecautions for ROPS 2-13
Precautions for Attachments 2-13
Cab Window Glasses 2-13
Unauthorized Modification 2-13
Safety at Worksite 2-14
Working on Loose Ground 2-14
Do Not Go Close to High-Voltage Cables 2-14
Ensure Good Visivility 2-15
Ventilation for Enclosed Areas 2-15
Checking Signalman's Signals and Signs 2-15
Be Careful About Asbestos Dust 2-15

Precautions for Operation 2-16
Before Starting Engine 2-16
Checks Before Starting Engine 2-16
Precautions When Starting 2-16
Precautions in Cold Areas 2-17
Operation 2-17
Checks Before Operation 2-17
Precautions When Moving Machine Forward or in Reverse 2-17
Precautions When Traveling 2-18
Traveling on Slopes 2-18
Prohibited Operations 2-19
Useing Brakes 2-19
Operate Carefully on Snow 2-19
Parking Machine 2-19
Transportation 2-20
Shipping 2-20
Battery 2-20
Battery Hazard Prevention 2-20
Starting with Booster Cable 2-21
Towing 2-22
When Towing 2-22

Precautions for Maintenance 2-23
Warning Tag 2-23
Keep Work Place Clean and Tidy 2-23

https://truckmanualshub.com/

Appoint Leader When Working with Others 2-23
Stop Engine Before Carrrying Out Inspection and Maintenance 2-24
Two Workers for Maintenance when Engine is Running 2-24
Proper Tools 2-25
Handling Accumulator 2-25
Personnel 2-25
Attachments 2-25
Work Under the Machine 2-26
Noise 2-26
Precautions When Using Hammer 2-26
Repair Welding 2-26
Removing Battery Terminal 2-26
Precautions When Using High-Pressure Grease to Adjust Track Tension 2-27
Do Not Disassemble Recoil Spring 2-27
Precaution with High-Pressure Oil 2-27
Handing High-Pressure Hoses 2-27
Waste Material 2-28
Maintenance for Air Conditioner 2-28
Compressed Air 2-28
Periodic Replacement of Safety Critical Parts 2-28

https://truckmanualshub.com/

SAFETY LABELS

The following warning signes and safety labels are used on this machine.

- Be sure that you fully understand the correct position and content of labels.
- To ensure that the content of labels can be read properly, be sure that they are in the correct place and always keep them clean. When cleaning them, do not use organic solvents or gasoline. These may cause the labels to peel off.
- There are also other labels in addition to the warning signes and safety labels. Handle those labels in the same way.
- If the labels are damaged, lost, or cannot be read properly, replace them with new ones. For details of the part numbers for the labels, see this manual or the actual label, and place an order with Komatsu distributor.

POSITIONS OF SAFETY PICTOGRAMS

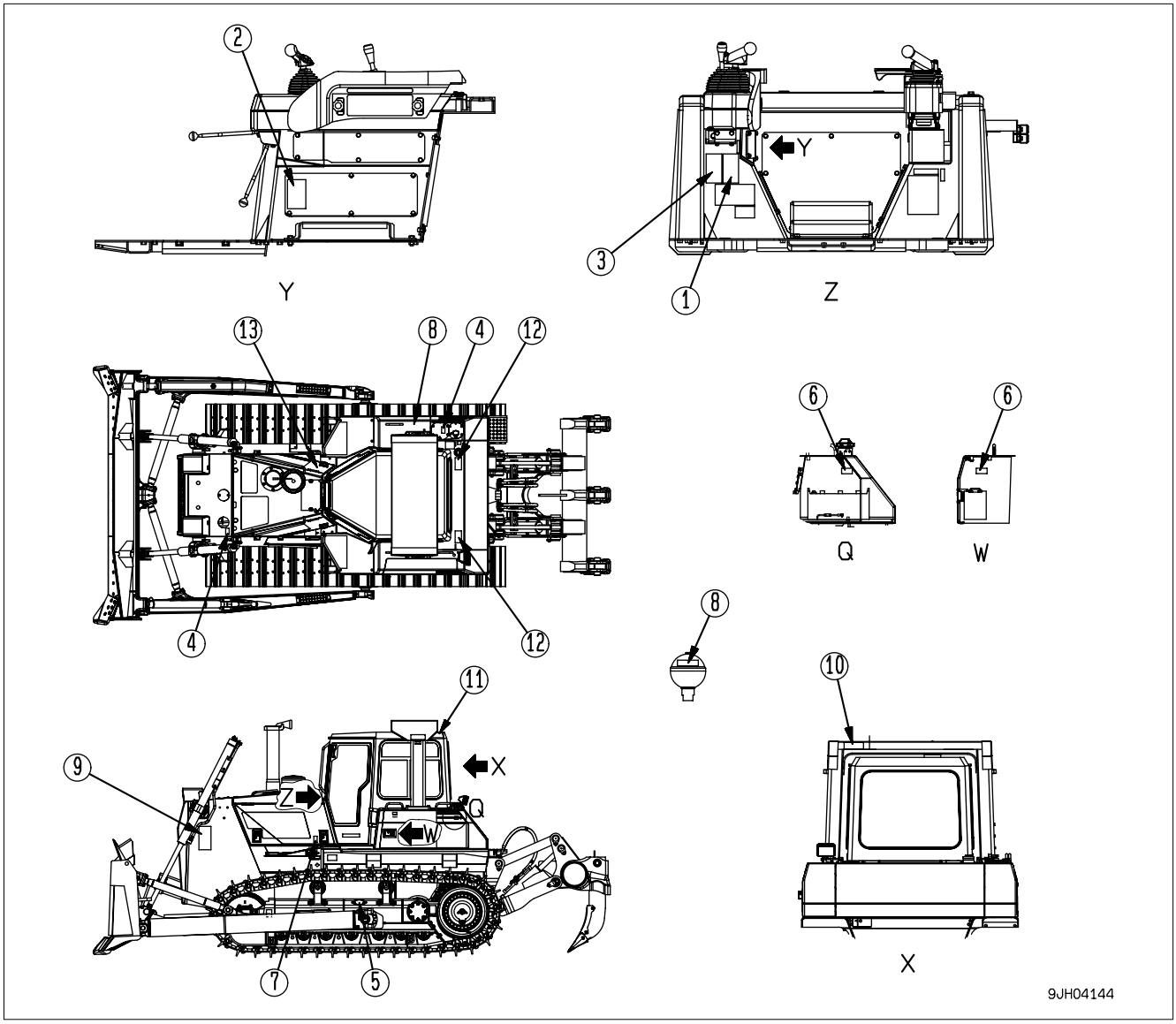

https://truckmanualshub.com/

SAFETY LABELS

(1) Precautions for operation, inspection and maintenance (09651-A0641)

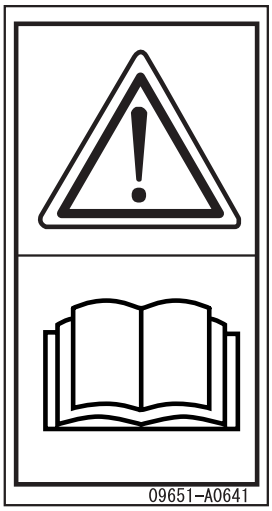

- Warning!
- Read manual before operation, maintaince, disassembly, assembly and transportation.

(2) Precautions when traveling in reverse (09802-13000)

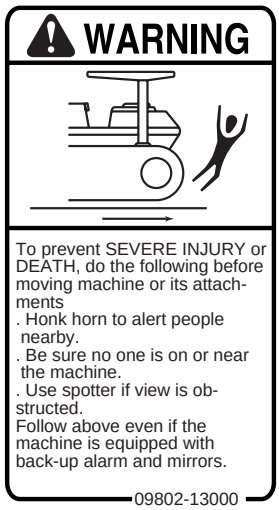

Warning
To prevent **SEVERE INJURY** or **DEATH**, do the following before moving machine or its attachments:
- Honk horn to alert people nearby.
- Be sure no one is on or near the machine.
- Use spotter if view is obstructed.

Follow above even if the machine is equipped with back-up alarm and mirrors.

(3) Precautions for leaving operator's seat (09654-B0641)

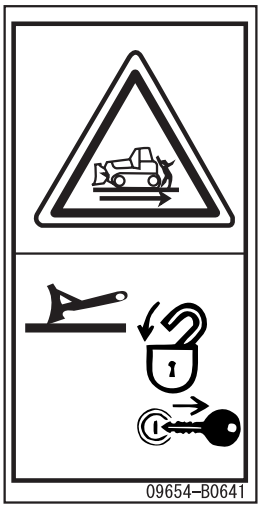

- Sign indicates a hazard of unexpected moving of stopped machine.
- Lower working device to ground, move safety lever to lock position and take engine key with you before leaving machine.

https://truckmanualshub.com/

(4) Precautions for high-temperature cooling water
(09653-A0481)

- Never remove the cap when the engine is at operating (High) temperature. Stream or high temperature oil blowing up from the radiator or hydraulic tank, will cause personal injury and or burns.
- Never remove the radiator or hydraulic tank oil filler when cooling water or hydraulic oil is at high temperatures.

5. Precautions when adjusting track tension
(09657-A0881)

Safety label is attached on the back side of the inspection cover of the track frame
- Plug coming from track shoe tension adjustment device causing injury.
- Read the operation and maintenance manual and carrying out the correct method when looseing track tension.

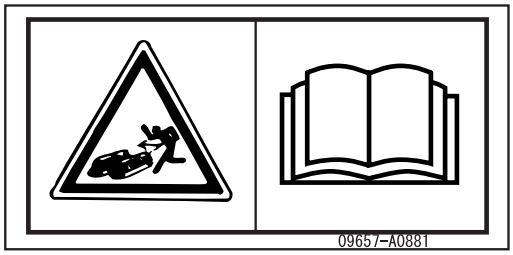

(6) Precautions for handling electric wires
(09808-A0881)

- There is the hazard to electric shock when handling electric wires.
- Read the operation and maintenance manual and carrying out the correct method when handling.

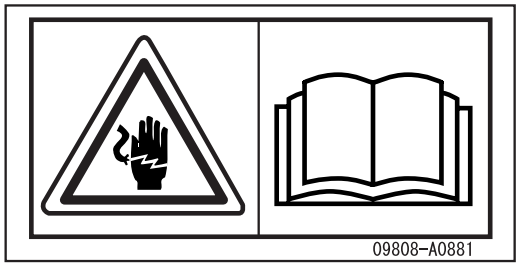

(7) Caution for engine running (09667-A0481)

- Sign indicates a hazard of rotating parts, such as belt.
- Turn off before inspection and maintenance.

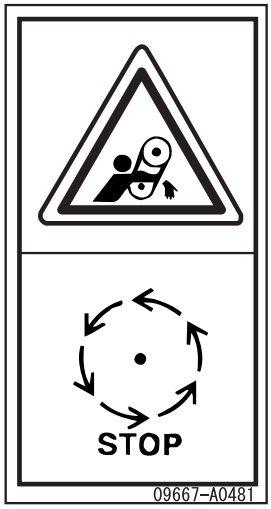

https://truckmanualshub.com/

(8) Precautions for handling accumulator
(09659-A057B)

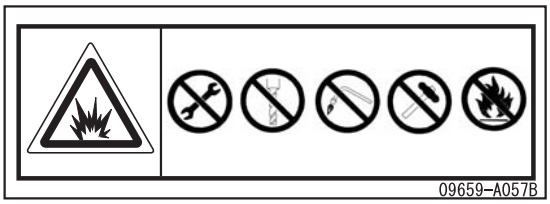

- There is the hazard of explotion causing injury.
- Do not disassemble the accumulator, make holes in it, weld it, cut it, hit it, roll it or bring it near flame.

(9) Caution for approach when machine moving
(09806-B1683)

- Sign indicates a hazard of being run over by moving equipment.
- Keep a safe distance from equipment when it is moving.

(10) ROPS (09620-B2000)

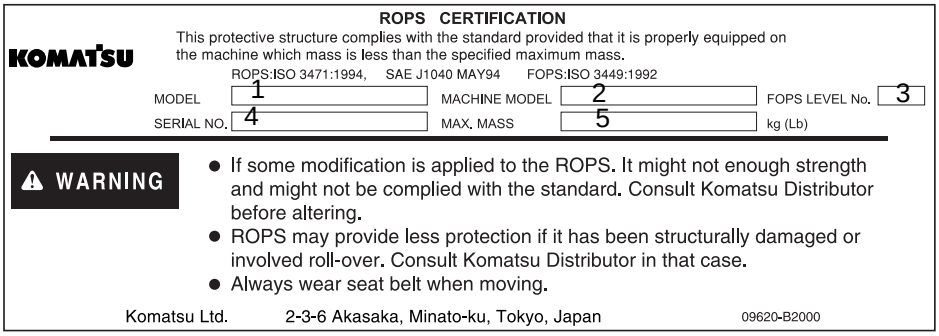

ROPS CERTIFICATION
This protective structure complies with the standard provided that us properly equipped on the machine which mass is less than the specified maximum mass.

1. MODEL	3. FOPS LEVEL No.	5. MAX. MASS kg (Lb)
2. MACHINE MODEL	4. SERIAL NO.	

WARNING
- If some modification is applied to the ROPS. It might not enough strength and might not be complied with the standard. Consult Komatsu Distributor before altering.
- ROPS may provide less protection if it has been structurally damaged or involved roll-over. Consult Komatsu Distributor in that case.
- Always wear seat belt when moving.

https://truckmanualshub.com/

(11) FOPS (09620-C2000)

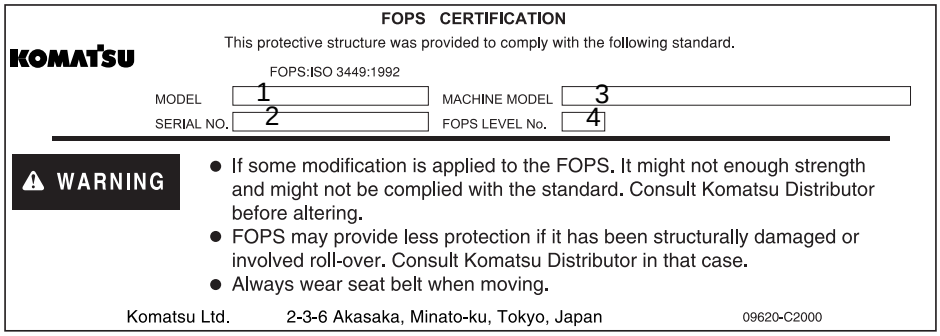
FOPS CERTIFICATION
This protective structure was provided to comply with the following standard.
KOMATSU
FOPS:ISO 3449:1992
MODEL 1
MACHINE MODEL 3
SERIAL NO. 2
FOPS LEVEL No. 4
WARNING
- If some modification is applied to the FOPS. It might not enough strength and might not be complied with the standard. Consult Komatsu Distributor before altering.
- FOPS may provide less protection if it has been structurally damaged or involved roll-over. Consult Komatsu Distributor in that case.
- Always wear seat belt when moving.

Komatsu Ltd. 2-3-6 Akasaka, Minato-ku, Tokyo, Japan 09620-C2000

FOPS CERTIFICATION
This protective structure was provided to comply with the following standard.

1. MODEL	2. MACHINE MODEL
3. SERIAL NO.	4. FOPS LEVEL No.

- If some modification is applied to the FOBS. It might not enough strength and might not be complied with the standard. Consult Komatsu Distributor before altering.
- FOBS may provide less protection if it has been structurally damaged or involved roll-over. Consult Komatsu Distributor in that case.
- Always wear seat belt when moving.

(12) Precaution for avoiding falling down (09805-C0881)
- Sign indicates a hazard of falling
- Do not stand on this place here

(13) Jump start prohibited (09842-A0481)
- Start the engine only after sitting down in the operator's seat.
- Do not attempt to start the engine by short-circuiting the engine starting circuit. Such an act may cause a serious bodily injury or fire.

https://truckmanualshub.com/

GENERAL PRECAUTIONS

SAFETY RULES

- Only trained and authorized personnel can operate and maintain the machine.
- Follow all safety rules, precautions and instructions when operating or performing maintenance on the machine.
- If you are under the influence of alcohol or medication, your ability to safely operate or repair your machine may be severly impaired putting yourself and everyone else on your jobsite in danger.
- When working with another operator or with a person on worksite traffic duty, be sure that all personnel understand all hand signals that are to be used.

IF ABNORMALITIES ARE FOUND

If you find any abnormality in the machine during operation or maintenance (noise, vibration, smell, incorrect gauges, smoke, oil leakage, etc., or any abnormal display on the warning devices or monitor), report to the person in charge and have the necessary action taken. Do not operate the machine until the abnormality has been corrected.

CLOTHING AND PERSONAL PROTECTIVE ITEMS

- Do not wear loose clothing and accessories. There is a hazard that they may catch on control levers or other protruding parts.
- If you have long hair and it hangs out from your hard hat, there is a hazard that it may get caught up in the machine, so tie your hair up and be careful not to let it get caught.
- Always wear a hard hat and safety shoes. If the nature of the work requires it, wear safety glasses, mask, gloves, ear plugs, and safety belt when operating or maintaining the machine.
- Check that all protective equipment functions properly before using it.

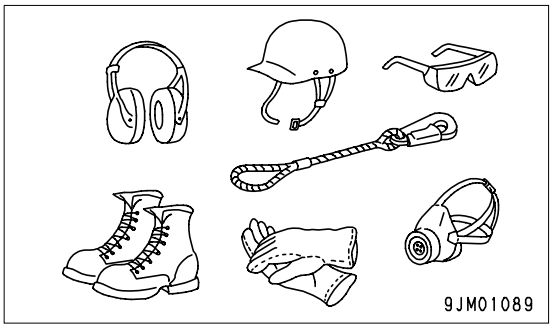

FIRE EXTINGUISHER AND FIRST AID KIT

Always follow the precautions below to prepare for action if any injury or fire should occur.

- Be sure that fire extinguishers have been provided and read the labels to ensure that you know how to use them in emergencies.
- Carry out periodic inspection and maintenance to ensure that the fire extinguisher can always be used.
- Provide a first aid kit at the storage point. Carry out periodic checks and add to the contents if necessary.

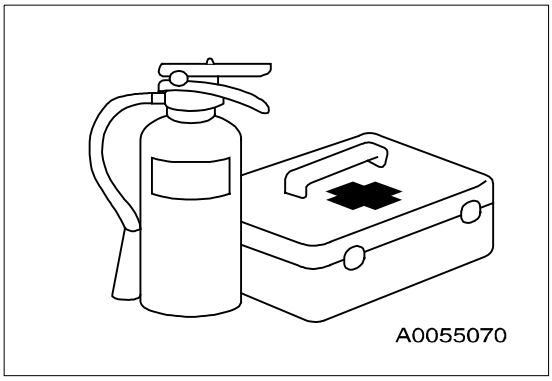

SAFETY FEATURES

- Be sure that all guards and covers are in their proper position. Have guards and covers repaired immediately if they are damaged.
- Understand the method of use of safety features and use them properly.
- Never remove any safety features. Always keep them in good operating condition.

KEEP MACHINE CLEAN

- If water gets into the electrical system, there is a hazard that it will cause malfunctions or misoperation. Do not use water or steam to wash the electrical system (sensors, connectors).

https://truckmanualshub.com/

- If inspection and maintenance is carried out when the machine is still dirty with mud or oil, there is a hazard that you will slip and fall, or that dirt or mud will get into your eyes. Always keep the machine clean.

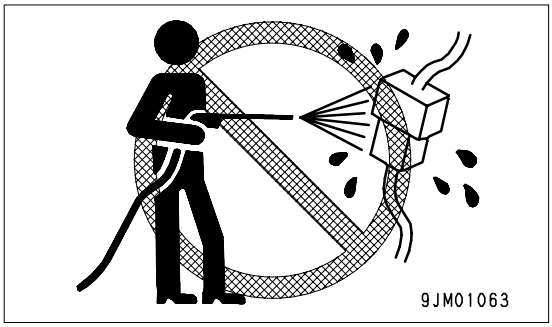

INSIDE OPERATOR'S COMPARTMENT

- When entering the operator's compartment, always remove all mud and oil from the soles of your shoes.
  If you operate the pedal with mud or oil affixed to your shoes, your foot may slip and this may cause a serious accident.
- Do not leave parts or tools lying around the operator's compartment.
- Do not stick suction pads to the window glass. Suction pads act as a lens and may cause fire.
- Do not use cellular telephones inside the operator's compartment when driving or operating the machine.
- Never bring any dangerous objects such as flammable or explosive items into the operator's compartment.

ALWAYS APPLY LOCK WHEN LEAVING OPERATOR'S SEAT

- Before standing up from the operator's seat, lower the work equipment completely to the ground, set safety lock lever and parking lever securely to the LOCK position, then stop the engine.
  If you accidentally touch the levers when they are not locked, there is a hazard that the machine may suddenly move and cause serious injury or property damage.

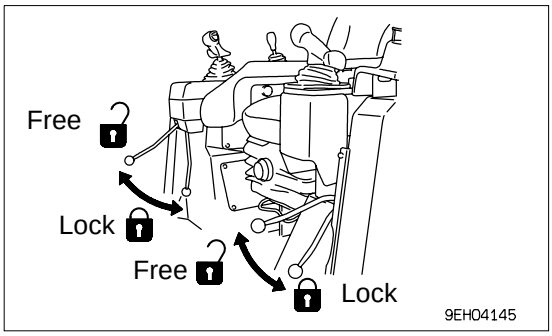

- When leaving the machine, always lower the work equipment completely to the ground, set safety lock lever and Parking lever securely to the LOCK position, then stop the engine. Use the key to lock all the equipment. Always remove the key, take it with you, and keep it in the specified place.

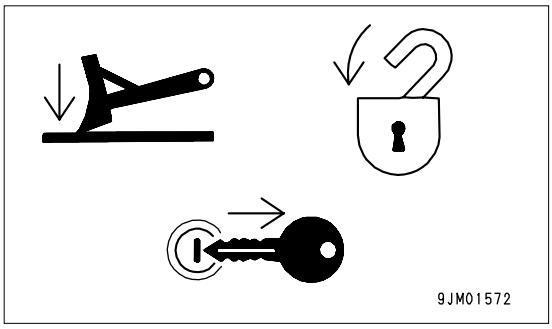

https://truckmanualshub.com/

HANDRAILS AND STEPS

To prevent personal injury caused by slipping or falling off the machine, always do as follows.

- Use the parts marked by arrow A in the diagrams when getting on or off the machine.
  Never use the parts marked by arrow B when getting on or off the machine. Use them only when moving along the top of the track or when checking or carrying out maintenance inside the side cover, or when filling the tank with oil.
- Never jump on or off the machine. In particular, never get on or off a moving machine. This may cause serious injury.

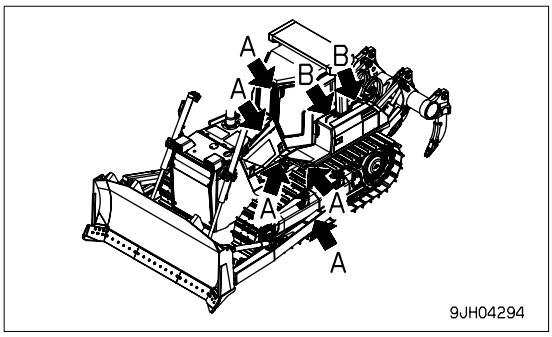

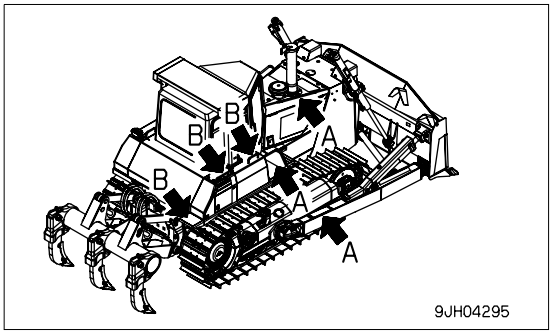

- To ensure safety, always face the machine and maintain three-point contact (both feet and one hand, or both hands and one foot) with the handrails and steps (including the track shoe) to ensure that you support yourself.
- Do not grip the control levers when getting on or off the machine.
- Never climb on the engine hood or covers where there are no non-slip pads.
- Before getting on or off the machine, check the handrails and steps (including the track shoe). If there is any oil, grease, or mud on the handrails or steps (including the track shoe), wipe it off immediately. Always keep these parts clean. Repair any damage and tighten any loose bolts.
- Do not get on or off the machine while holding tools in your hand.

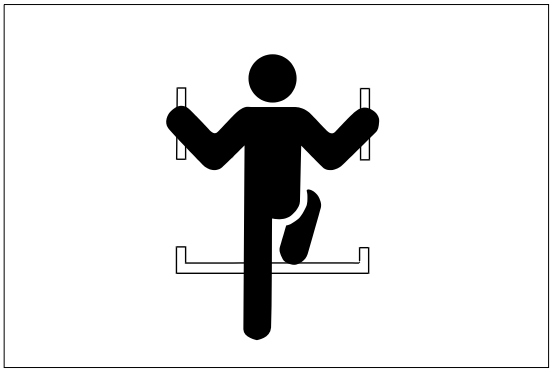

MOUNTING AND DISMOUNTING

- Never jump on or off the machine. Never get on or off a moving machine.
- If the machine starts to move when there is no operator on the machine, do not jump on to the machine and try to stop it.

NO PEOPLE ON ATTACHMENTS

Never let anyone ride on the work equipment, or other attachments. There is a hazard of falling and suffering serious injury.

https://truckmanualshub.com/

PREVENTION OF BURNS

Hot coolant

- To prevent burns from hot water or steam spurting out when checking or draining the coolant, wait for the water to cool to a temperature where it is possible to touch the radiator cap by hand before starting the operation. Even when the coolant has cooled down, loosen the cap slowly to relieve the pressure inside the radiator before removing the cap.

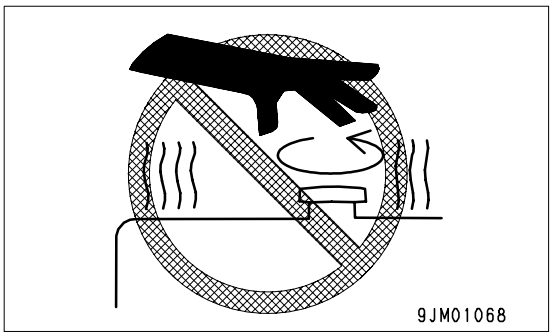

Hot oil

- To prevent burns from hot oil spurting out when checking or draining the oil, wait for the oil to cool to at temperature where it is possible to touch the cap or plug by hand before starting the operation. Even when the oil has cooled down, loosen the cap or plug slowly to relieve the internal pressure before removing the cap or plug.

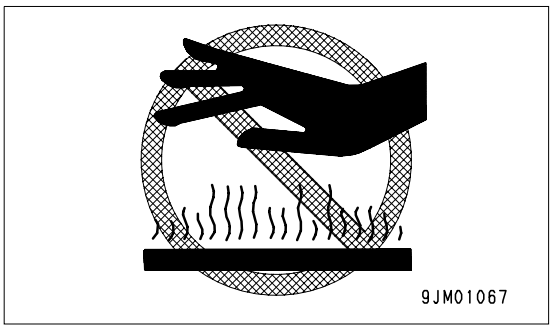

FIRE PREVENTION

- **Fire caused by fuel or oil**
  Fuel, oil, antifreeze, and window washer liquid are particularly flammable and can be hazardous. To prevent fire, always observe the following:
  - Do not smoke or use any flame near fuel or oil.
  - Stop the engine before refueling.
  - Do not leave the machine while adding fuel or oil.
  - Tighten all fuel and oil caps securely.
  - Do not spill fuel on overheated surfaces or on parts of the electrical system.
  - Use well-ventilated areas for adding or storing oil and fuel.
  - Keep oil and fuel in the determined place and do not allow unauthorized persons to enter.
  - After adding fuel or oil, wipe up any spilled fuel or oil.
  - When carrying out grinding or welding work on the chassis, move any flammable materials to a safe place before starting.
  - When washing parts with oil, use a non-flammable oil. Diesel oil and gasoline may catch fire, so do not use them.
  - Put greasy rags and other flammable materials into a safe container to maintain safety at the work place.
  - Do not weld or use a cutting torch to cut any pipes or tubes that contain flammable liquids.

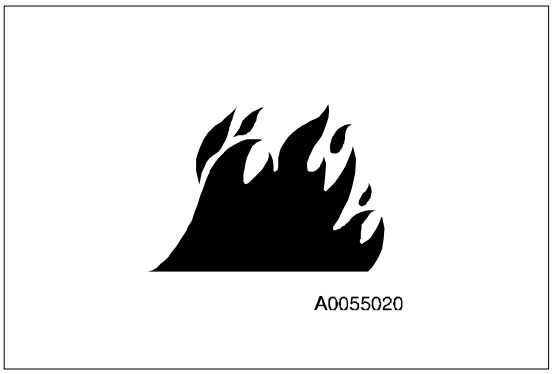

- **Fire caused by accumulation of flammable material.**
  Remove any dry leaves, chips, pieces of paper, dust, or any other flammable materials accumulated or affixed around the engine, exhaust manifold, muffler, or battery, or inside the undercovers.

- **Fire coming from electric wiring**
  Short circuits in the electrical system can cause fire.
  - Always keep electric wiring connections clean and securely tightened.
  - Check the wiring every day for looseness or damage. Tighten any loose connectors or wiring clamps. Repair or replace any damaged wiring.

https://truckmanualshub.com/

- **Fire coming from hydraulic line**
  Check that all the hose and tube clamps, guards, and cushions are securely fixed in position.
  If they are loose, they may vibrate during operation and rub against other parts. This may lead to damage to the hoses, and cause high-pressure oil to spurt out, leading to fire damage or serious injury.

- **Explosion caused by lighting equipment**
  - When checking fuel, oil, battery electrolyte, window washer fluid, or coolant, always use lighting with anti-explosion specifications. If such lighting equipment is not used, there is danger of explosion that may cause serious injury.
  - When taking the electrical power for the lighting from the machine itself, follow the instructions in this manual.

ACTION IF FIRE OCCURS

If a fire occurs, escape from the machine as follows.
- Turn the start switch OFF to stop the engine.
- Use the handrails and steps to get off the machine.

WINDOW WASHER LIQUID

Use an ethyl alcohol base washer liquid.
Methyl alcohol base washer liquid may irritate your eyes, so do not use it.

PRECAUTIONS WHEN USING ROPS (Roll Over Protective Structure)

Install ROPS when carrying out operations in places where there is danger of the machine rolling over or where there is danger of falling rocks, such as in mines and quarries.
- If ROPS is installed, do not remove it when operating the machine.
- ROPS is installed to protect the operator when machine rolls over. When machine rolls over, ROPS supports its weight and absorbs its impact energy.
- If ROPS is modified, its strength may lower. When modifying it, consult your Komatsu distributor.

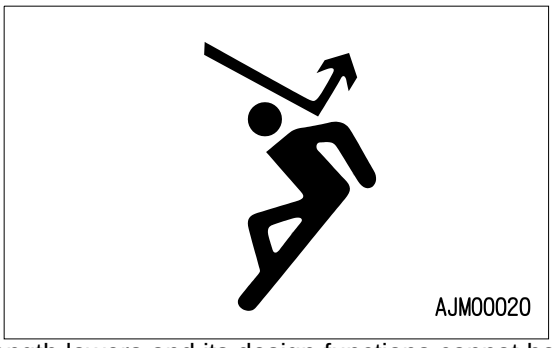

- If ROPS is deformed by falling objects or by rolling over, its strength lowers and its design functions cannot be maintained. In this case, be sure to ask your Komatsu distributor about repair method.

Even when the ROPS is installed, if you do not fasten your seat belt securely, it cannot protect you properly. Always fasten your seat belt when operating the machine.

PRECAUTIONS FOR ATTACHMENTS

- When installing optional parts or attachments, there may be problems with safety or legal restrictions. Therefore contact your Komatsu distributor for advice.
- Any injuries, accidents, or product failures resulting from the use of unauthorized attachments or parts will not be the responsibility of Komatsu.
- When installing and using optional attachments, read the instruction manual for the attachment, and the general information related to attachments in this manual.

CAB WINDOW GLASSES

If the cab glass on the work equipment side is broken, there is a hazard that the work equipment may contact the operator's body directly. Stop operation immediately and replace the glass.

UNAUTHORIZED MODIFICATION

Any modification made without authorization from Komatsu can create hazards. Before making a modification, consult your Komatsu distributor.
- Komatsu will not be responsible for any injuries, accidents, product failures or other property damages resulting from modifications made without authorization from Komatsu.

https://truckmanualshub.com/

SAFETY AT WORKSITE

Before starting operations, thoroughly check the area for any unusual conditions that could be dangerous.

- When carrying out operations near combustible materials such as thatched roofs, dry leaves or dry grass, there is a hazard of fire, so be careful when operating.
- Check the terrain and condition of the ground at the worksite, and determine the safest method of operation. Do not carry out operations at places where there is a hazard of landslides or falling rocks.
- If water lines, gas lines, or high-voltage electrical lines may be buried under the worksite, contact each utility and identify their locations. Be careful not to sever or damage any of these lines.
- Take necessary measures to prevent any unauthorized person from entering the operating area.
- In particular, if you need to operate on a road, protect pedestrian and cars by designating a person for worksite traffic duty or by installing fences around the worksite.
- When traveling or operating in shallow water or on soft ground, check the shape and condition of the bedrock, and the depth and speed of flow of the water before starting operations.

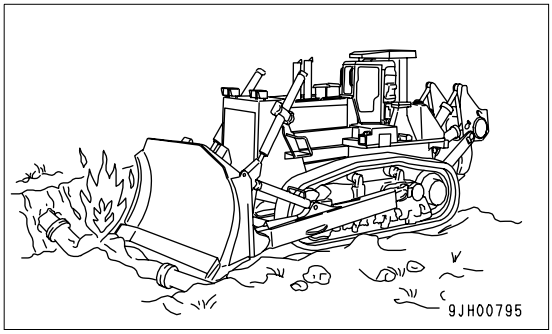

WORKING ON LOOSE GROUND

- Avoid traveling or operating your machine too close to the edge of cliffs, overhangs, and deep ditches. The ground may be weak in such areas. If the ground should collapse under the weight or vibration of the machine, there is a hazard that the machine may fall or tip over. Remember that the soil after heavy rain or blasting or after earthquakes is weak in these areas.
- When working on embankments or near excavated ditches, there is a hazard that the weight and vibration of the machine will cause the soil to collapse. Before starting operations, take steps to ensure that the ground is safe and to prevent the machine from rolling over or falling.

DO NOT GO CLOSE TO HIGH-VOLTAGE CABLES

Do not travel or operate the machine near electric cables. There is a hazard of electric shock, which may cause serious injury or property damage. On jobsites where the machine may go close to electric cables, always do as follows.

- Before starting work near electric cables, inform the local power company of the work to be performed, and ask them to take the necessary action.
- Even going close to high-voltage cables can cause electric shock, which may cause serious burns or even death. Always maintain a safe distance (see the table on the right) between the machine and the electric cable. Check with the local power company about safe operating procedure before starting operations.
- To prepare for any possible emergencies, wear rubber shoes and gloves. Lay a rubber sheet on top of the seat, and be careful not to touch the chassis with any exposed part of your body.
- Use a signalman to give warning if the machine approaches too close to the electric cables.
- When carrying out operations near high voltage cables, do not let anyone come close to the machine.
- If the machine should come too close or touch the electric cable, to prevent electric shock, the operator should not leave the operator's compartment until it has been confirmed that the electricity has been shut off.
  Also, do not let anyone come close to the machine.

Voltage of Cables	Safety Distance
100 V - 200 V	Over 2 m
6,600 V	Over 2 m
22,000 V	Over 3 m
66,000 V	Over 4 m
154,000 V	Over 5 m
187,000 V	Over 6 m
275,000 V	Over 7 m
500,000 V	Over 11 m

https://truckmanualshub.com/

ENSURE GOOD VISIBILITY

- Check for any persons or obstacles in the area around the machine and check the conditions of the jobsite to ensure that operations and travel can be carried out safely. Always do as follows.
  - Position a signalman if there are areas at the rear of the machine where the visibility is not good.
  - When working in dark places, turn on the working lamp and front lamps installed to the machine, and set up additional lighting in the work area if necessary.
  - Stop operations if the visibility is poor, such as in mist, snow, rain, or dust.

VENTILATION FOR ENCLOSED AREAS

Exhaust fumes from the engine can kill.

- If it is necessary to start the engine within an enclosed area, or when handling fuel, flushing oil, or paint, open the doors and windows to ensure that adequate ventilation is provided to prevent gas poisoning.

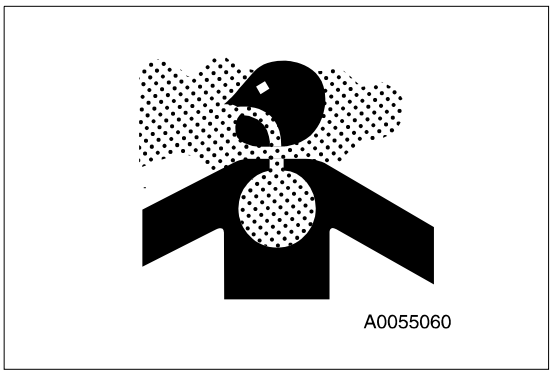

CHECKING SIGNALMAN'S SIGNALS AND SIGNS

- Set up signs to inform of road shoulders and soft ground. If the visibility is not good, position a signalman if necessary. Operators should pay careful attention to the signs and follow the instructions from the signalman.
- Only one signalman should give signals.
- Make sure that all workers understand the meaning of all signals and signs before starting work.

BE CAREFUL ABOUT ASBESTOS DUST

Asbestos dust in the air can cause lung cancer if it is inhaled. There is danger of inhaling asbestos when working on jobsites handling demolition work or work handling industrial waste. Always observe the following.

- Spray water to keep down the dust when cleaning. Do not use compressed air for cleaning.
- If there is danger that there may be asbestos dust in the air, always operate the machine from an upwind position. All workers should use an approved respirator.
- Do not allow other persons to approach during the operation.
- Always observe the rules and regulations for the work site and environmental standards.

This machine does not use asbestos, but there is a danger that imitation parts may contain asbestos, so always use genuine Komatsu parts.

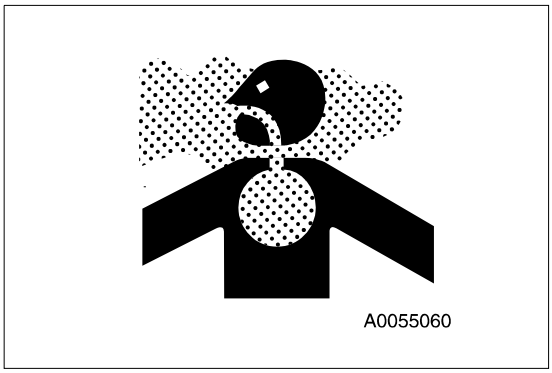

https://truckmanualshub.com/

PRECAUTIONS FOR OPERATION

BEFORE STARTING ENGINE

If there is a warning tag hanging from the work equipment control lever, do not start the engine or touch the levers .

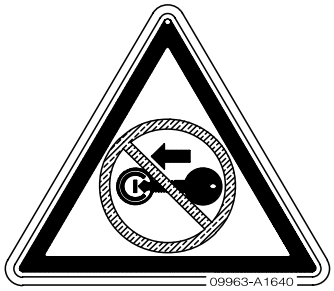

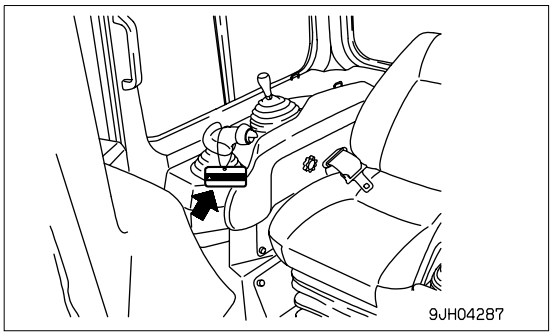

CHECKS BEFORE STARTING ENGINE

Carry out the following checks before starting the engine at the beginning of the day's work.

- Completely remove all flammable materials accumulated around the engine and battery, and remove any dirt from the windows, mirrors, handrails and steps.
- Remove all dirt from the surface of the lens of the front lamps and working lamps, and check that they light up correctly.
- Check the coolant level, fuel level, and oil level in engine oil pan, check for clogging of the air cleaner, and check for damage to the electric wiring.
- Adjust the operator's seat to a position where it is easy to carry out operations, and check that there is no damage or wear to the seat belt or mounting clamps.
- Check that the gauges work properly, check the angle of the lights and working lamps, and check that the control levers are all at the neutral position.
- When starting the engine, check that the parking lever and safety lock lever are at the LOCK position.
- Adjust the mirrors so that you can get a good rear-view from the operator's seat.
  For the details of adjustment, see “ADJUST MIRROR (3-66)“.
- Check that there are no persons or obstacles above, below, or in the area around the machine.

PRECAUTIONS WHEN STARTING

- Start and operate the machine only while seated.
- Do not attempt to start the engine by short-circuiting the engine starting circuit. Such an act may cause a serious bodily injury or fire.
- When starting the engine, sound the horn as a warning.
- Do not allow anyone apart from the operator to ride on the machine.

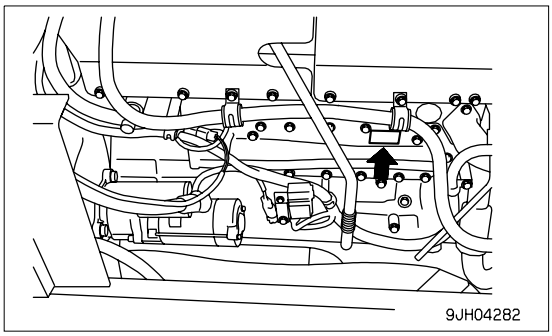

https://truckmanualshub.com/

PRECAUTIONS IN COLD AREAS

- Carry out the warming-up operation thoroughly. If the machine is not thoroughly warmed up before the control levers are operated, the reaction of the machine will be slow, and this may lead to unexpected accidents.
- If the battery electrolyte is frozen, do not charge the battery or start the engine with a different power source. There is a hazard that this will ignite the battery and cause the battery to explode.
  Before charging or starting the engine with a different power source, melt the battery electrolyte and check that there is no leakage of electrolyte before starting.

OPERATION

CHECKS BEFORE OPERATION

When carrying out the checks, move the machine to a wide area where there are no obstructions, and operate slowly. Do not allow anyone near the machine.

- Always fasten your seat belt.
- Check the operation of travel, steering and brake systems, and work equipment control system.
- Check for any abnormality in the sound of the machine, vibration, heat, smell, or gauges; check also that there is no leakage of oil or fuel.
- If any abnormality is found, carry out repairs immediately.

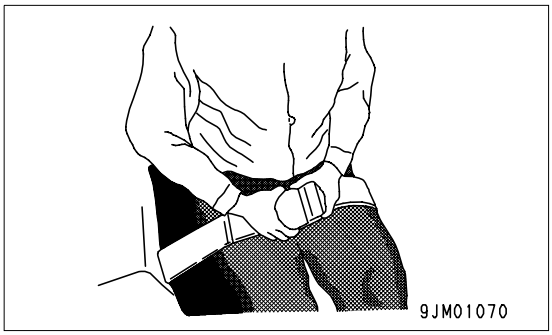

PRECAUTIONS FOR MOVING MACHINE FORWARD OR IN REVERSE

- Before travelling, check again that there is no one in the surrounding area, and that there are no obstacles.
- Before travelling, sound the horn to warn people in the area.
- Always operate the machine only when seated.
- Do not allow anyone apart from the operator to ride on the machine.
- Check that the back-up alarm (alarm buzzer when machine travels in reverse) works properly.
- Always lock the door and windows of the operator's compartment in position (open or closed).
  On jobsites where there is a hazard of flying objects or of objects entering the operator's compartment, check that the door and windows are securely closed.
- If there is an area to the rear of the machine where the visibility is obstructed, use a flagman. Be extremely careful not to hit anything and drive the machine slowly.

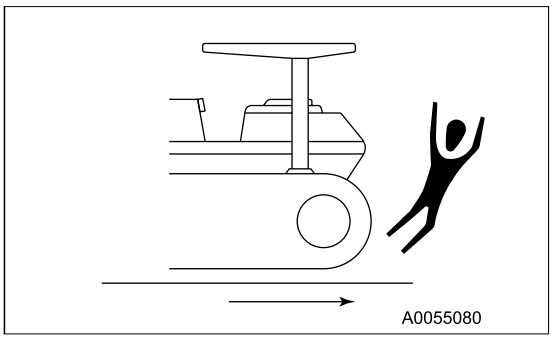

Always be sure to carry out the above precautions even when the machine is equipped with mirrors.

https://truckmanualshub.com/

PRECAUTIONS WHEN TRAVELING

- Never turn the starting switch to the OFF position when traveling. It is dangerous if the engine stops when the machine is traveling. When the engine is off, it is impossible to operate the steering. Apply the brakes and stop the machine immediately, if the engine stops.
- When traveling on flat ground, keep the work equipment 40 to 50 cm high above the ground.
- When traveling on rough ground, travel at low speed and do not operate the steering suddenly. There is danger that the machine may turn over. The work equipment may hit the ground surface and cause the machine to lose its balance, or may damage the machine or structures in the area.

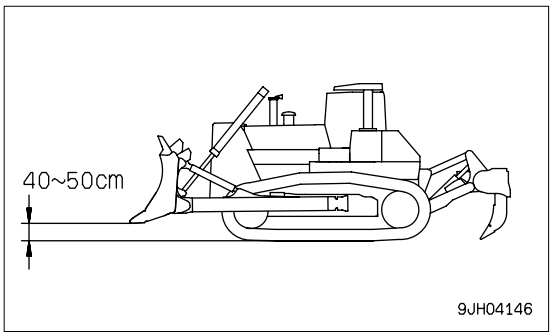

- Avoid traveling over obstacles when possible. If the machine has to travel over an obstacle, keep the work equipment close to the ground and travel at low speed. Never travel over obstacles which make the machine tilt strongly to one side.
- When traveling or carrying out operations, always keep a safe distance from people, structures, or other machines to avoid coming into contact with them.
- When passing over bridges or structures, check first that the structure is strong enough to support the weight of the machine. When traveling on public roads, check first with the relevant authorities and follow their instructions.

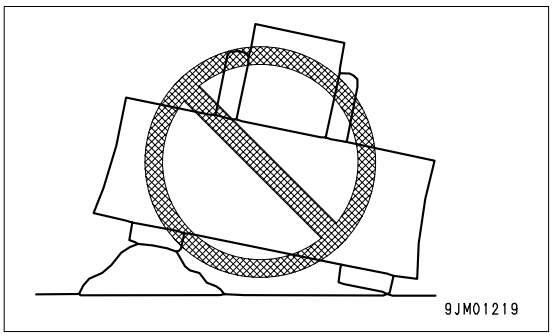

- When operating in tunnels, under bridges, under electric wires, or other places where the height is limited, operate slowly and be extremely careful not to let the work equipment hit anything.
- Do not approach the edge of a cliff carelessly. When dropping soil over a cliff for banking or reclamation, leave soil of one scoop at the edge of the cliff and push it with the next scoop.
- When the machine passes over the top of a hill or when a load is dumped over a cliff, the load is suddenly reduced, and there is danger that the travel speed rises suddenly. To prevent this, lower the travel speed.
- If the machine moves with only either side of the blade loaded, its tail may swing. Take care.

TRAVELING ON SLOPES

To prevent the machine from tipping over or slipping to the side, always do as follows.

- When traveling on slops, keep the blade approxmately 20 to 30 cm above the ground. In case of emergency, quickly lower the blade to the ground to help the machine to stop. Apply the brake and use the engine as a brake, if necessary.
- Always travel straight up or down a slope. Traveling at an angle or across the slope is extremely dangerous.
- Do not turn on slopes or travel across slopes. Always go down to a flat place to change the position of the machine, then travel on to the slope again.
- Travel on grass, fallen leaves, or wet steel plates with low speed. Even with slight slopes there is a hazard that the machine may slip.

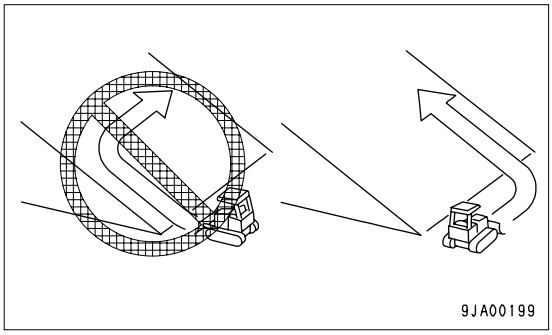

- When driving down a slope, never shift gear or place the transmission in neutral. The engine brake cannot be used and this creates a dangerous condition. Always travel downhill in the same speed range as when traveling uphill.
- When turning on a downhill ground, lower the travel speed.

https://truckmanualshub.com/

PROHIBITED OPERATIONS

- To make it easier to escape if there is any problem, set the tracks at right angles to the road shoulder or cliff with the sprocket at the rear when carrying out operations.
- When operating the machine, take care that it will not exceed its performance values such as stability, maximum using load, etc. to prevent rolling of the machine caused by an overload and disasters caused by breakage of the work equipment.

USING BRAKES

- When the machine is traveling, do not rest your foot on the brake pedal. If you travel with your foot resting on the pedal, the brake will always be applied, and this will cause the brakes to overheat and fail.
- Do not depress the brake pedal repeatedly if not necessary. If this is neglected, the brake will be overheated and will not work when required.
- When traveling downhill, use the braking force of the engine.

OPERATE CAREFULLY ON SNOW

- Snow-covered or frozen surfaces are slippery, so be extremely careful when traveling or operating the machine, and do not operate the levers suddenly. Even a slight slope may cause the machine to slip, so be particularly careful when working on slopes.
- With frozen ground surfaces, the ground becomes soft when the temperature rises, and this may cause the machine to tip over.
- If the machine enters deep snow, there is a hazard that it may tip over or become buried in the snow. Be careful not to leave the road shoulder or to get trapped in a snow drift.
- When clearing snow, the road shoulder and objects placed beside the road are buried in the snow and cannot be seen. There is a hazard of the machine tipping over or hitting covered objects, so always carry out operations carefully.
- When traveling on snow-covered slopes, never apply the brakes suddenly. Reduce the speed and use the engine as a brake while appling the foot brake intermittently (depress the brake intermittently several times). If necessary, lower the blade to the ground to stop the machine.

PARKING MACHINE

- Park the machine on level ground where there is no danger of falling rocks or landslides, or of flooding if the land is low, and lower the work equipment to the ground.
- If it is necessary to park the machine on a slope, set the blocks under the tracks to prevent the machine from moving, then dig the work equipment into the ground.

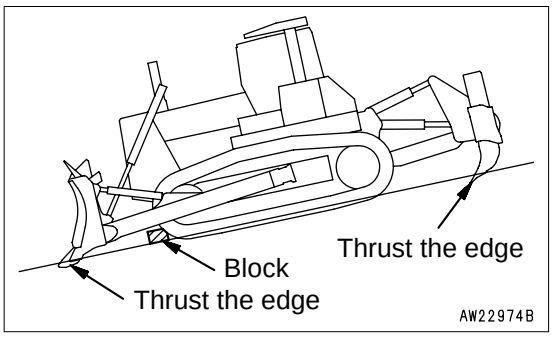

- When leaving the machine, set the safety lock lever and parking lever to the LOCK position, stop the engine, and use the key to lock all the equipment. Always remove the key and take it with you.

Work equipment posture: See “PARKING MACHINE (3-89)“.
Locks: See “LOCKING (3-91)“

- Always close the door of the operator's compartment.

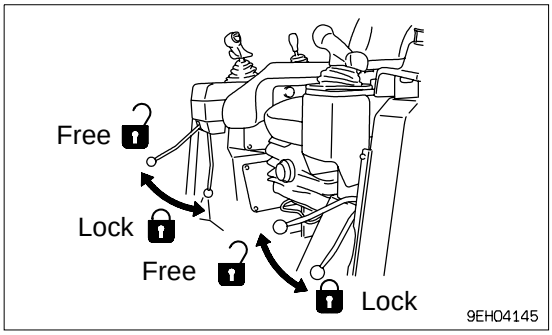

https://truckmanualshub.com/

TRANSPORTATION

The machine can be divided into parts for transportation, so when transportating the machine, please contact your Komatsu distributor to have the work carried out.

SHIPPING

When shipping the machine on a trailer, do as follows.

- The weight, transportation height, and overall length of the machine differ according to the work equipment, so be sure to confirm the dimensions.
- When passing over bridges or structures on private land, check first that the structure is strong enough to support the weight of the machine. When traveling on public roads, check first with the relevant authorities and follow their instructions.
- For details of the shipping procedure, see “TRANSPORTATION (3-100)“ in the OPERATION section.

BATTERY

BATTERY HAZARD PREVENTION

Battery electrolyte contains sulphuric acid, and batteries generate flammable hydrogen gas, which may explode. Mistaken handling can lead to serious injury or fire. For this reason, always observe the following precautions.

- When the battery electrolyte is below LOWER LEVEL, don't either use or charge the battery. Otherwise, that may cause explosion. Always carry out periodic checks of the battery electrolyte, and add distilled water up to UPPER LEVEL.
  For the method of checking the battery electrolyte, see CHECK LEVEL OF BATTERY ELECTROLYTE (4-41).
- When working with batteries, always wear safety glasses and rubber gloves.
- Never smoke or use any flame near the battery.

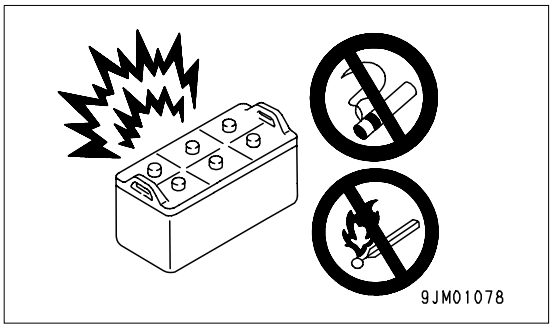

- If you spill acid on your clothes or skin, immediately flush the area with large amount of water.
- If acid gets into your eyes, flush them immediately with large amount of water and seek medical attention.

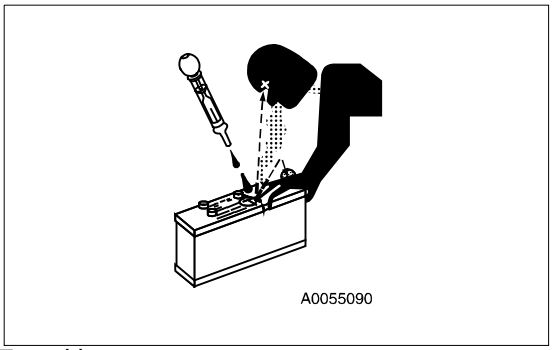

- Before working with batteries, turn the starting switch to the OFF position.

As there is a hazard that sparks will be generated, always do as follows.

- Do not let tools or other metal objects make any contact between the battery terminals. Do not leave tools or other metal objects lying around near the battery.
- Always disconnect the negative (-) terminal (ground side) first when removing the battery; when installing the battery, connect the positive (+) terminal first, and connect the ground last. Tighten the battery terminals securely.
- Tighten the battery terminals securely.
- Flammable hydrogen gas is generated when the battery is charged, so remove the battery from the chassis, take it to a well-ventilated place, and remove the battery caps before charging it.
- Tighten the battery caps securely.
- Install the battery securely to the determined place.

https://truckmanualshub.com/

STARTING WITH BOOSTER CABLE

If any mistake is made in the method of connecting the booster cables, it may cause the battery to explode, so always do as follows.

- When starting with a booster cable, carry out the starting operation with two workers (one worker sitting in the operator's seat and the other working with the battery).
- When starting from another machine, do not allow the two machines to touch.
- When connecting the booster cables, turn the starting switch OFF for both the normal machine and problem machine. There is a hazard that the machine will move when the power is connected.
- Be sure to connect the positive (+) cable first when installing the booster cables. Disconnect the negative (-) cable (ground side) first when removing them.
- When removing the booster cables, be careful not to let the booster cable clips touch each other or to let the clips touch the machine.
- Always wear safety goggles and rubber gloves when starting the engine with booster cables.
- When connecting a normal machine to a problem machine with booster cables, always use a normal machine with the same battery voltage as the problem machine.
- For the procedure of starting the engine with booster cables, see STARTING ENGINE WITH BOOSTER CABLE (3-109).

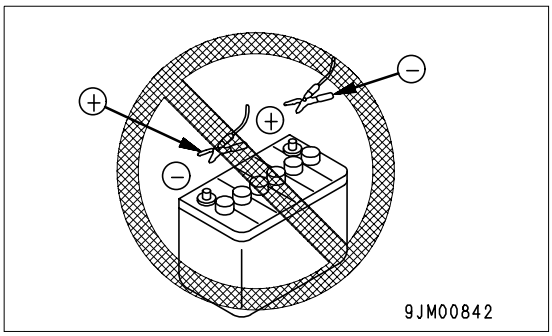

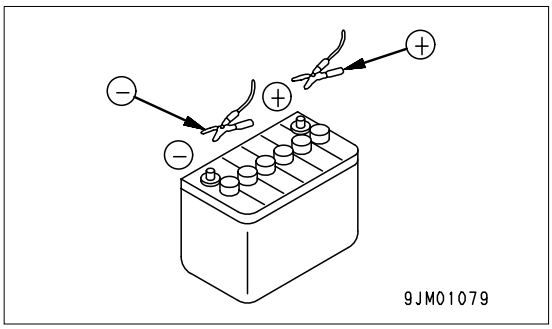

https://truckmanualshub.com/

TOWING

WHEN TOWING

Injury or death could result if a disabled machine is towed incorrectly. Always observe the following rules.

- Never use a towing method different from the one described in this manual.
  For the method of towing, see METHOD OF TOWING MACHINE (3-108).
- When handling a wire rope, always wear leather gloves.
- When working with others to prepare for towing, signals should be agreed upon beforehand.
- If your machine is towed by another machine, stop the engine and release the brake. Please contact your Komatsu distributor to have the brake released.
- If this machine cannot travel under its own power, release the brakes, then tow the machine with another machine. Please contact your Komatsu distributor to have the brakes released.
- Towing on slopes is dangerous. When doing so, choose a gentle slope. If no gentle slope is available, make such a slope by earth-removal work.
- When connecting up a towing machine, do not let anyone enter the area between the towing machine and the equipment being towed.
- Do not straddle the towing cable or wire rope.
- When your machine is towed by another machine, ALWAYS use a wire rope with a sufficient towing capacity.
- Set the towing machine and the towing connection of the equipment being towed in a straight line when connecting it.
- Take up the slack in the wire rope and tow the machine.
- When lifting the machine up, use the towing hook.
- If the machine is stuck in sandy soil, dig out the soil around the towing hook, then use the towing hook to pull the machine out.
  Permissible load for towing hook: 21,800 kg (213,780 N).
- Do not use a broken (A), kinked (B) or frayed (C) wire rope.

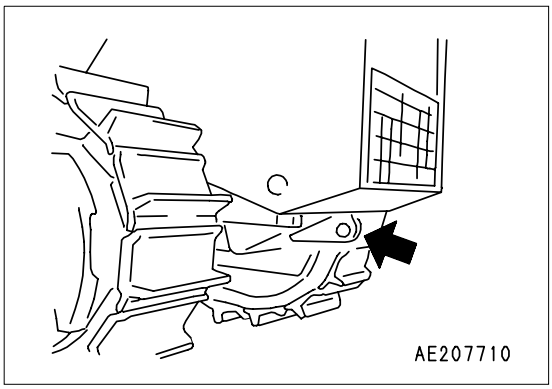

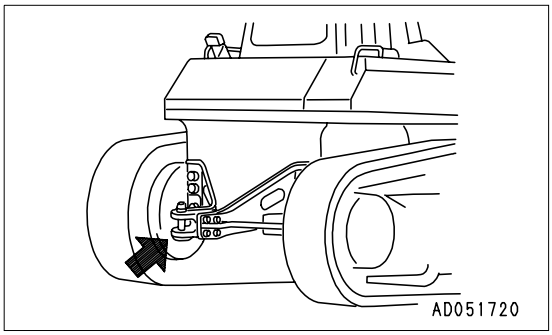

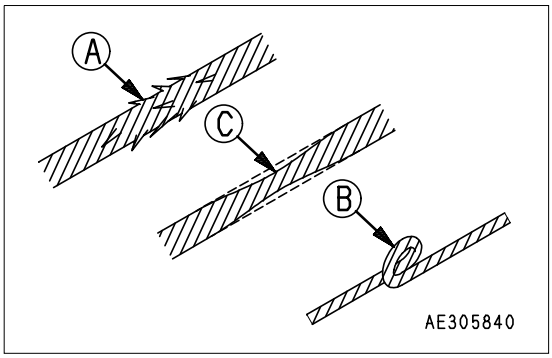

https://truckmanualshub.com/

PRECAUTIONS FOR MAINTENANCE

WARNING TAG

- When carrying out inspection or maintenance, ALWAYS attach the “DO NOT OPERATE“ warning tag to the blade control lever in the operator's cab to alert others that you are working on the machine. Attach additional warning tags around the machine in necessary.

  Warning tag Part No. 09963-A1640
  This tag is placed in the same case as is this operation and maintenace manual.
- If others start the engine, or touch or operate the work equipment control lever while you are performing service or maintenance, you could suffer serious injury or property damage.

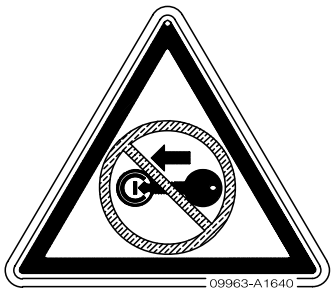

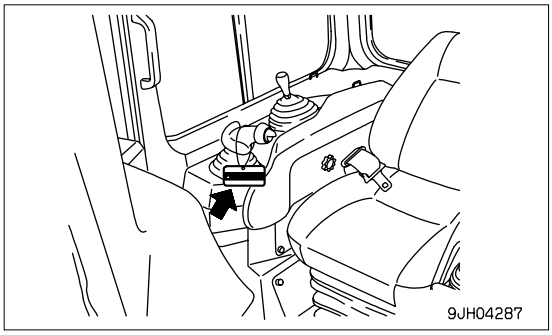

KEEP WORK PLACE CLEAN AND TIDY

- Do not leave hammers or other tools lying around in the work place. Wipe up all grease, oil, or other substances that will cause you to slip. Always keep the work place clean and tidy to enable you to carry out operations safely.
  If the work place is not kept clean and tidy, there is the danger that you will trip, slip, or fall over and injure yourself.

APPOINT LEADER WHEN WORKING WITH OTHERS

- When repairing the machine or when removing and installing the work equipment, appoint a leader and follow his instructions during the operation.

https://truckmanualshub.com/

STOP ENGINE BEFORE CARRYING OUT INSPECTION AND MAINTENANCE

- Stop the machine on firm, level ground.
- Select a place where there is no hazard of falling rocks or landslides, or of flooding if the land is low.
- Lower the work equipment completely to the ground and stop the engine.
- After stopping the engine, operate the work equipment control lever to the RAISE and LOWER positions 2 or 3 times to release the pressure remaining in the hydraulic circuit, then set the safety lock lever and Parking lever to LOCK position.

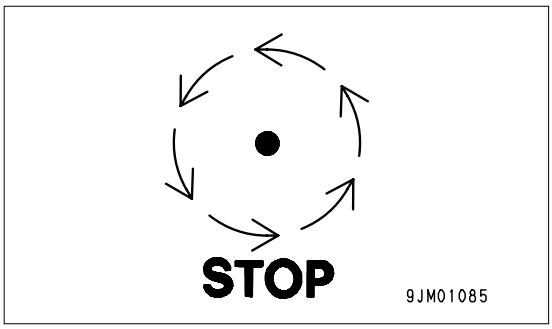

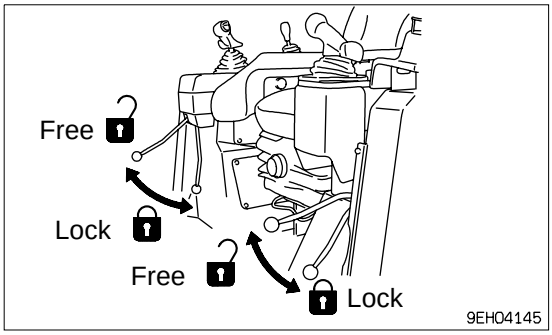

- Put blocks under the track to prevent the machine from moving.

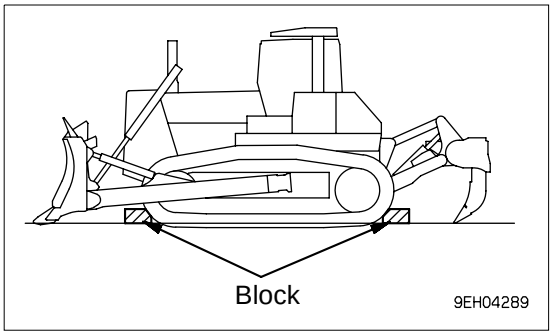

TWO WORKERS FOR MAINTENANCE WHEN ENGINE IS RUNNING

To prevent injury, do not carry out maintenance with the engine running. If maintenance must be carried out with the engine running, carry out the operation with at least two workers and do as follows.

- One worker must always sit in the operator's seat and be ready to stop the engine at any time. All workers must maintain contact with the other workers.
- Place the parking lever and safety lock lever at the LOCK position to prevent the work equipment from moving.
- When carrying out operations near the fan, fan belt, or other rotating parts, there is a hazard of being caught in the parts, so be careful not to come close.
- Do not touch any control levers. If any control lever must be operated, give a signal to the other workers to warn them to move to a safe place.
- Never drop or insert tools or other objects into the fan or fan belt. Parts may break or be sent flying.

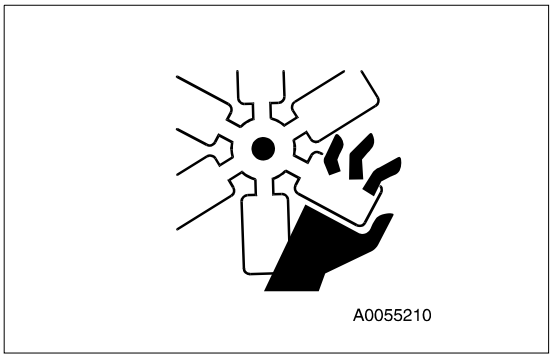

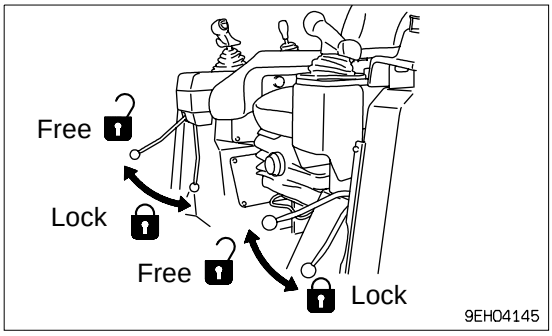

https://truckmanualshub.com/

PROPER TOOLS

Use only tools suited to the task and be sure to use the tools correctly. Using damaged, low quality, faulty, makeshift tools or improper use of the tools could cause serious personal injury.

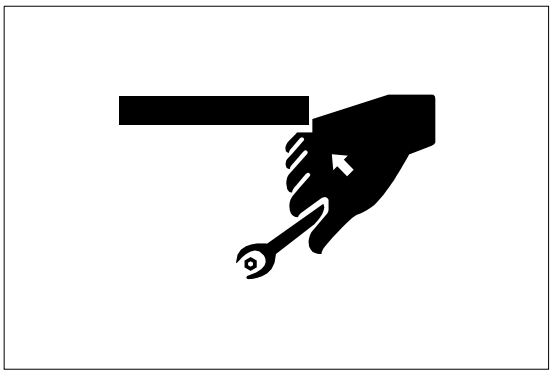

HANDLING ACCUMULATOR

- On machines equipped with an accumulator, for a short time after the engine is stopped, if the blade control lever is moved to the LOWER position, the work equipment will move down under its own weight.
  After stopping the engine, always place the safety lock lever and Parking lever in the LOCK position.
- When releasing the pressure inside the work equipment circuit on machines equipped with an accumulator, follow the procedure given in the following section.
  Method of releasing pressure : See “ACCUMULATOR, HANDLING (3-54)“.

The accumulator is charged with high-pressure nitrogen gas. When handling the accumulator, careless procedure may cause an explosion which could lead to serious injury or property damage. For this reason, always observe the following precautions.

- Do not disassemble the accumulator.
- Do not bring it near flame or dispose of it in fire.
- Do not make holes in it, weld it, or use a cutting torch.
- Do not hit or roll the accumulator, or subject it to any impact.
- When disposing of the accumulator, the gas must be released. Please contact your Komatsu distributor to have this work performed.

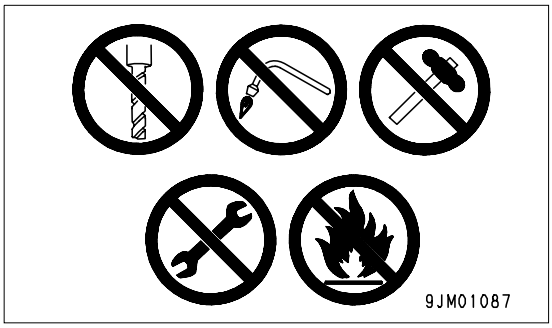

PERSONNAL

Only authorized personnel can service and repair the machine. Do not allow unauthorized personnel into the area. If necessary, employ an observer.

ATTACHMENTS

- Appoint a leader before starting removal or installation operations for attachments.
- Place attachments that have been removed from the machine in a stable condition so that they do not fall. And take steps to prevent unauthorized persons from entering the storage area.

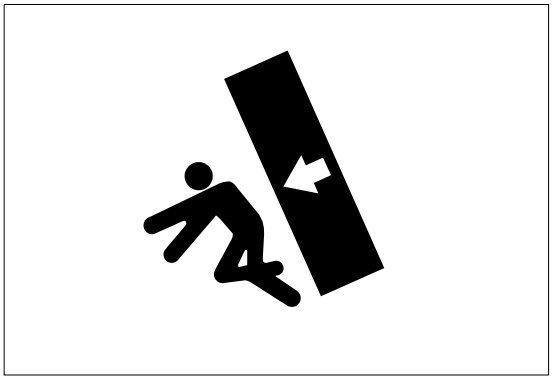

https://truckmanualshub.com/

WORK UNDER THE MACHINE

- If it is necessary to go under the work equipment or the machine to carry out service and maintenance, support the work equipment and machine securely with blocks and stands strong enough to support the weight of the work equipment and machine.
- It is extremely dangerous to work under the machine if the track shoes are lifted off the ground and the machine is supported only with the work equipment. If any of the control levers is touched by accident, or there is damage occurring to the hydraulic piping, the work equipment or the machine will suddenly drop. This is extremely dangerous. Never work under the work equipment or the machine.

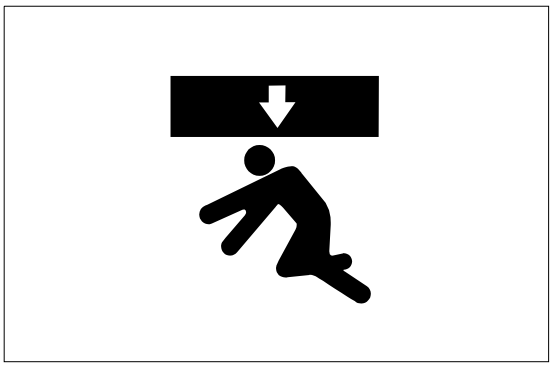

NOISE

When carrying out maintenance of the engine and you are exposed to noise for long periods of time, wear ear covers or ear plugs while working.
If the noise from the machine is too loud, it may cause temporary or permanent hearing problems.

PRECAUTIONS WHEN USING HAMMER

When using a hammer, pins may fly out or metal particles may be scattered. This may lead to serious injury. Always do as follows.

- If hard metal parts such as pins, bucket teeth, cutting edges, or bearings are hit with a hammer, there is a hazard that pieces might be scattered and cause injury. Always wear safety goggles and gloves.
- When hitting pins or bucket teeth, there is a hazard that broken pieces might be sent flying and injure people in the surrounding area. Always check that there is no one in the surrounding area.

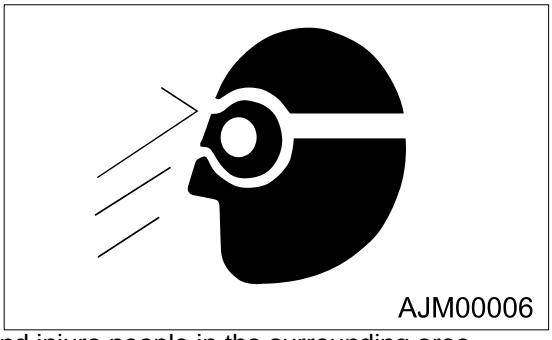

- There is a hazard that the pin hit with strong force may fly out and injure people in the surrounding area.

REPAIR WELDING

Welding operations must always be carried out by a qualified welder and in a place equipped with proper equipment. There is a hazard of gas, fire, or electrocution when carrying out welding, so never allow any unqualified personnel to carry out welding.

REMOVING BATTERY TERMINAL

When repairing the electrical system or when carrying out electrical welding, remove the negative (-) terminal of the battery to prevent the flow of current.

https://truckmanualshub.com/

PRECAUTIONS WHEN USING HIGH-PRESSURE GREASE TO ADJUST TRACK TENSION

- Grease is pumped into the track tension adjustment system under high pressure. If the specified procedure for maintenance is not followed when making adjustment, grease drain valve (1) may fly out and cause serious injury or damage.
- When loosening grease drain valve (1) to loosen track tension, never loosen it more than one turn. In doing so, loosen the valve slowly.
- Never put your face, hands, feet, or any other part of your body directly in front of grease drain valve (1).

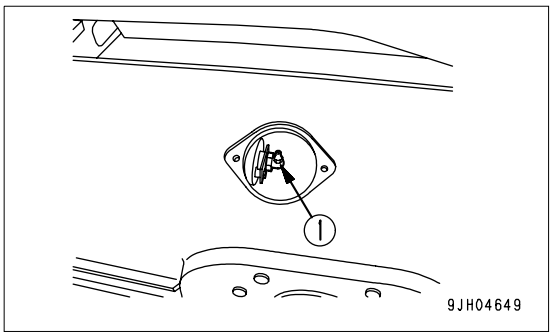

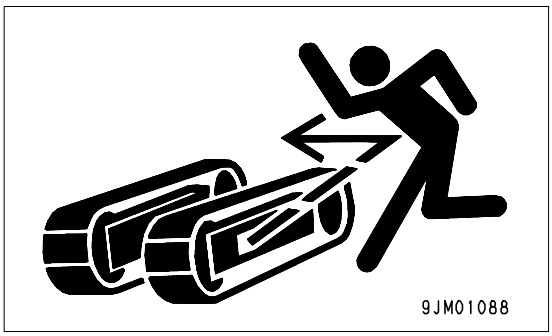

DO NOT DISASSEMBLE RECOIL SPRING

Never attempt to disassemble the recoils spring assembly. It contains a spring under high pressure which serves as a shock absorber for the idler. If it is disassembled by mistake, the spring will fly out and cause serious injury. When it becomes necessary to disassemble it, ask your Komatsu distributor to do the work.

PRECAUTION WITH HIGH-PRESSURE OIL

The hydraulic system is always under internal pressure. When inspecting or replacing piping or hoses, always check that the pressure in the hydraulic circuit has been released. If the circuit is still under pressure, it will lead to serious injury, so always do as follows.

- Do not carry out inspection or replacement work when the hydraulic system is under pressure.
- If there is any leakage from the piping or hoses, the surrounding area will be wet, so check for cracks in the piping and hoses and for swelling in the hoses.
  When carry out inspection, wear safety glasses and leather gloves.
- There is a hazard that high-pressure oil leaking from small holes may penetrate your skin or cause blindness if it contacts your eyes directly. If you are hit by a jet of high-pressure oil and suffer injury to your skin or eyes, wash the place with clean water, and consult a doctor immediately for medical attention.

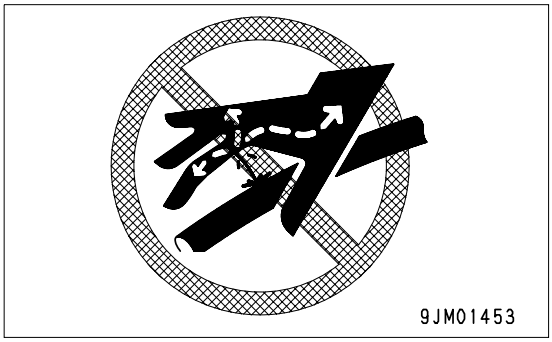

PRECAUTION FOR HIGH FUEL PRESSURE

When the engine is running, high-pressure is generated in the engine fuel piping. When carrying out inspection or maintenance of the fuel piping system, stop the engine and wait for at least 30 seconds to allow the internal pressure to go down before starting the operation.

HANDLING HIGH-PRESSURE HOSES

- If oil or fuel leaks from high-pressure hoses, it may cause fire or defective operation, which may lead to serious injury. If any loose bolts are found, stop work and tighten to the specified torque. If any damaged hoses are found, stop operations immediately and contact your Komatsu distributor.

Replace the hose if any of the following problems are found.

https://truckmanualshub.com/

- Damaged or leaking hydraulic fitting.
- Frayed or cut covering or exposed reinforcement wire layer.
- Covering swollen in places.
- Twisted or crushed movable portion.
- Foreign material embedded in covering.

PRECAUTION FOR HIGH VOLTAGE

- When the engine is running and immediately after it is stopped, high voltage is generated inside the engine controller and the engine injector, and there is danger of electrocution. Never touch the inside of the controller or the engine injector portion.
  If it is necessary to touch the inside of the controller or the engine injector portion, please contact your Komatsu distributor.

WASTE MATERIAL

To prevent pollution, pay careful attention to the method of disposing of waste materials.

- Always put oil drained from your machine in containers. Never drain oil directly onto the ground or dump into the sewage system, rivers, the sea, or lakes.
- Obey appropriate laws and regulations when disposing of harmful objects such as oil, fuel, coolant, solvent, filters, and batteries.

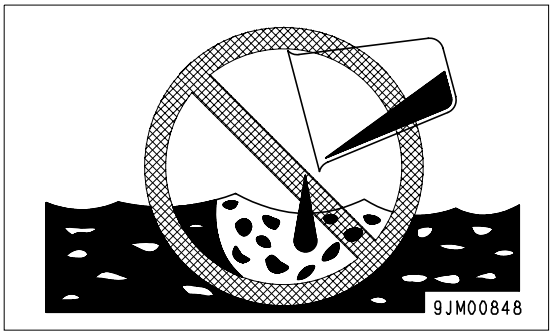

MAINTENANCE FOR AIR CONDITIONER

If air conditioner refrigerant gets into your eyes, it may cause blindness; if it touches your skin, it may cause frostbite.
Never touch refrigerant.

COMPRESSED AIR

- When carrying out cleaning with compressed air, there is a hazard of serious injury caused by flying particles.
- When using compressed air to clean elements or the radiator, always wear safety goggles, dust mask, gloves, and other protective equipment.

PERIODIC REPLACEMENT OF SAFETY CRITICAL PARTS

- To enable the machine to be used safely for long periods, always periodically add oil and carry out inspection and maintenance. However, to further increase safety, periodically replace the seat belt, hoses, and other parts which have a close relationship to safety.
  See Replacing critical parts: PERIODIC REPLACEMENT OF SAFETY CRITICAL PARTS (4-14)
- The material of these components naturally changes over time, and repeated use causes deterioration, wear, and fatigue. As a result, there is a hazard that these components may fail and cause serious injury or death. It is difficult to judge the remaining life of these components from external inspection or the feeling when operating, so always replace them at the specified interval.
- Replace or repair safety-critical parts if any defect is found, even when they have not reached the time specified interval.

https://truckmanualshub.com/

OPERATION

⚠ WARNING

Please read and make sure that you understand the safety volume before reading this section.

https://truckmanualshub.com/

GENERAL VIEW

GENERAL VIEW OF MACHINE

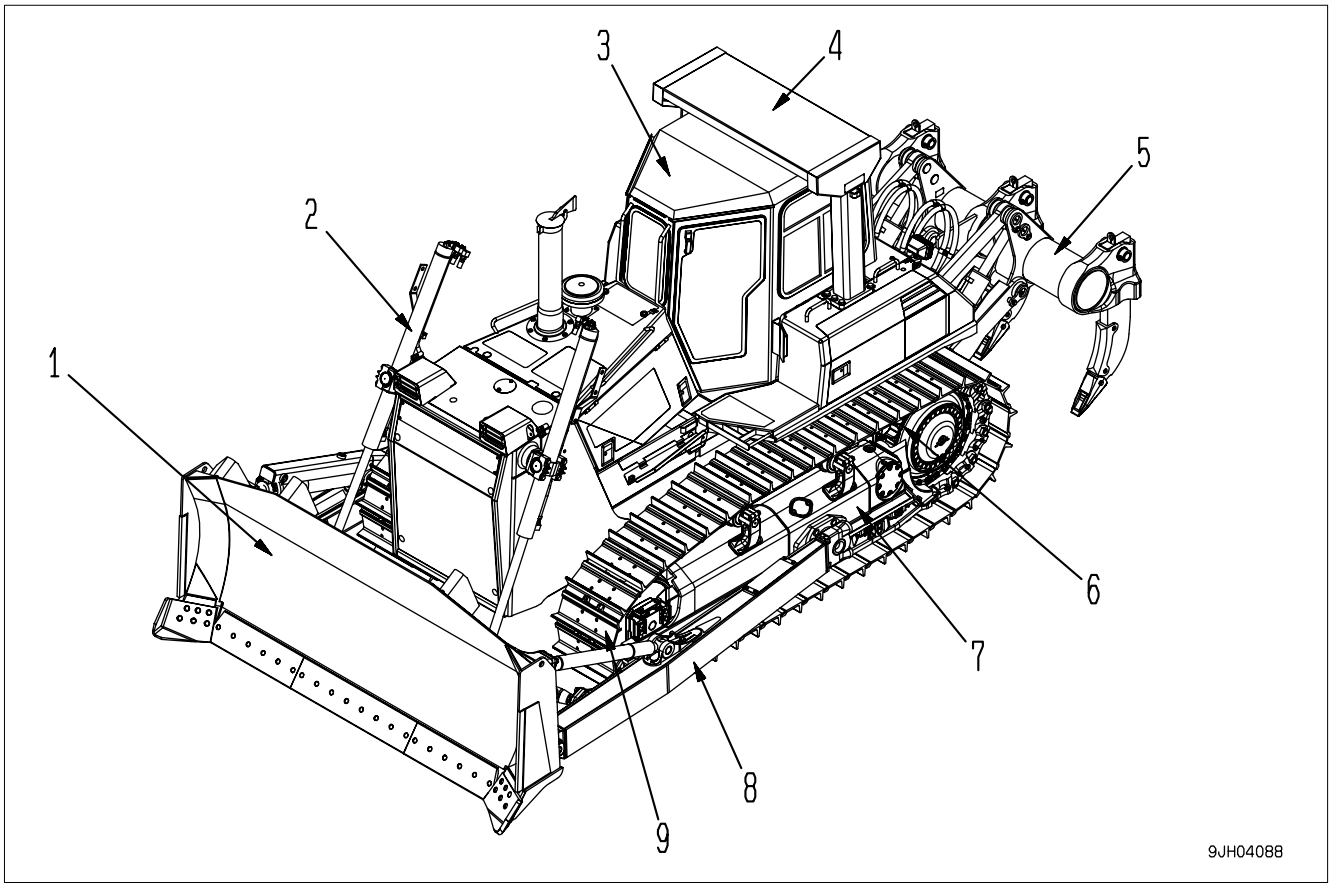

(1) Blade	(6) Sprocket
(2) Blade lift cylinder	(7) Track frame
(3) Cab	(8) Frame
(4) ROPS	(9) Track shoe
(5) Ripper	

https://truckmanualshub.com/

GENERAL VIEW OF CONTROLS AND GAUGES

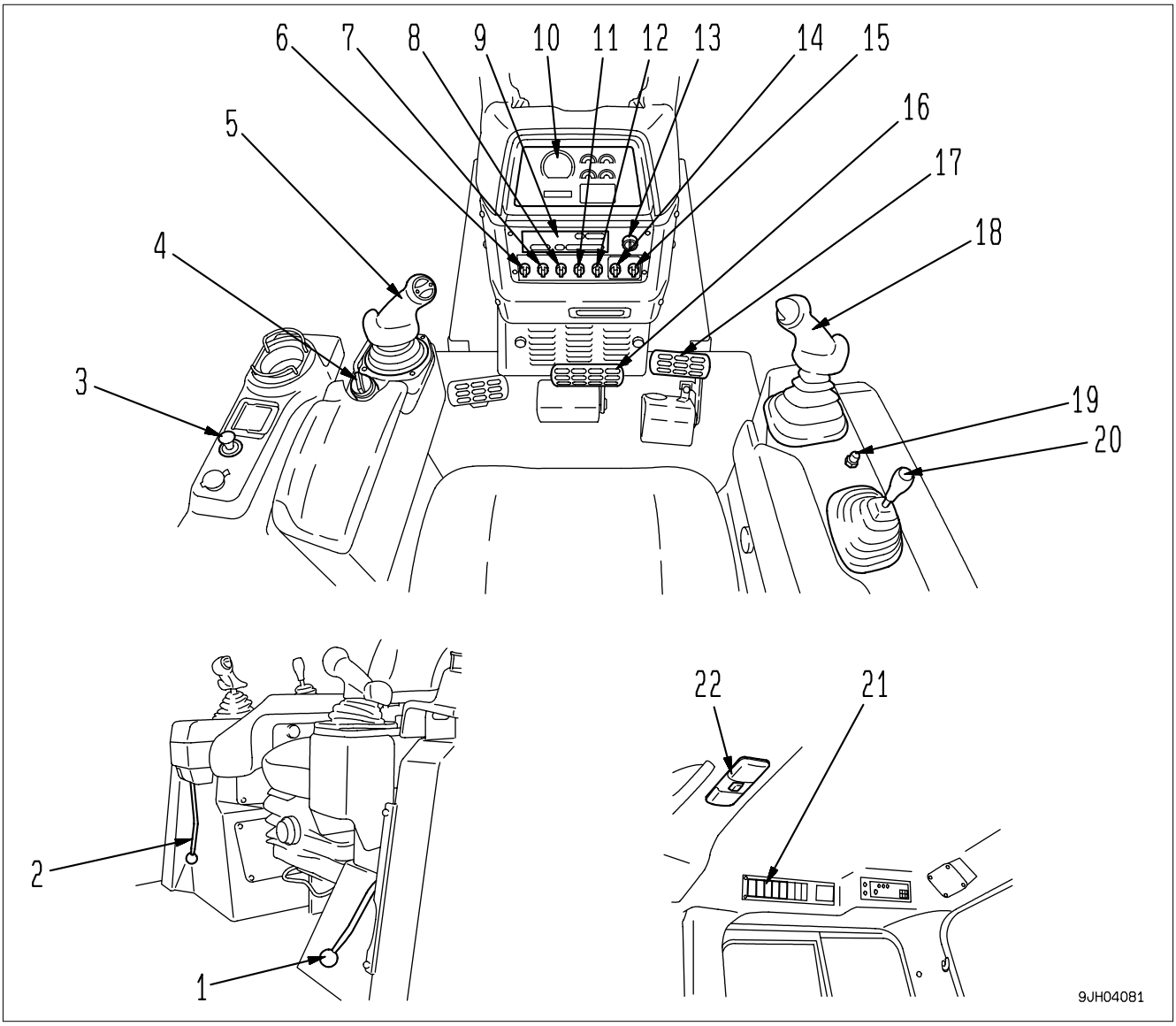

(1) Parking lever	(12) Fan selector switch
(2) Safety lock lever	(13) Starting switch
(3) Cigarette lighter	(14) Information switch
(4) Fuel control dial	(15) Buzzer cancel switch
(5) Joystick (Steering, directional and gear shift lever)	(16) Brake pedal
(6) Auto shift down switch	(17) Deceleration pedal
(7) Preset mode switch	(18) Blade control lever
(8) Head lamp switch	(19) Horn switch
(9) Air conditioner panel or heater panel	(20) Ripper control lever
(10) Display panel A (Speed range, Engine speed)	(21) Wiper switch
(11) Rear lamp switch	(22) Room lamp switch

https://truckmanualshub.com/

FRONT PANEL

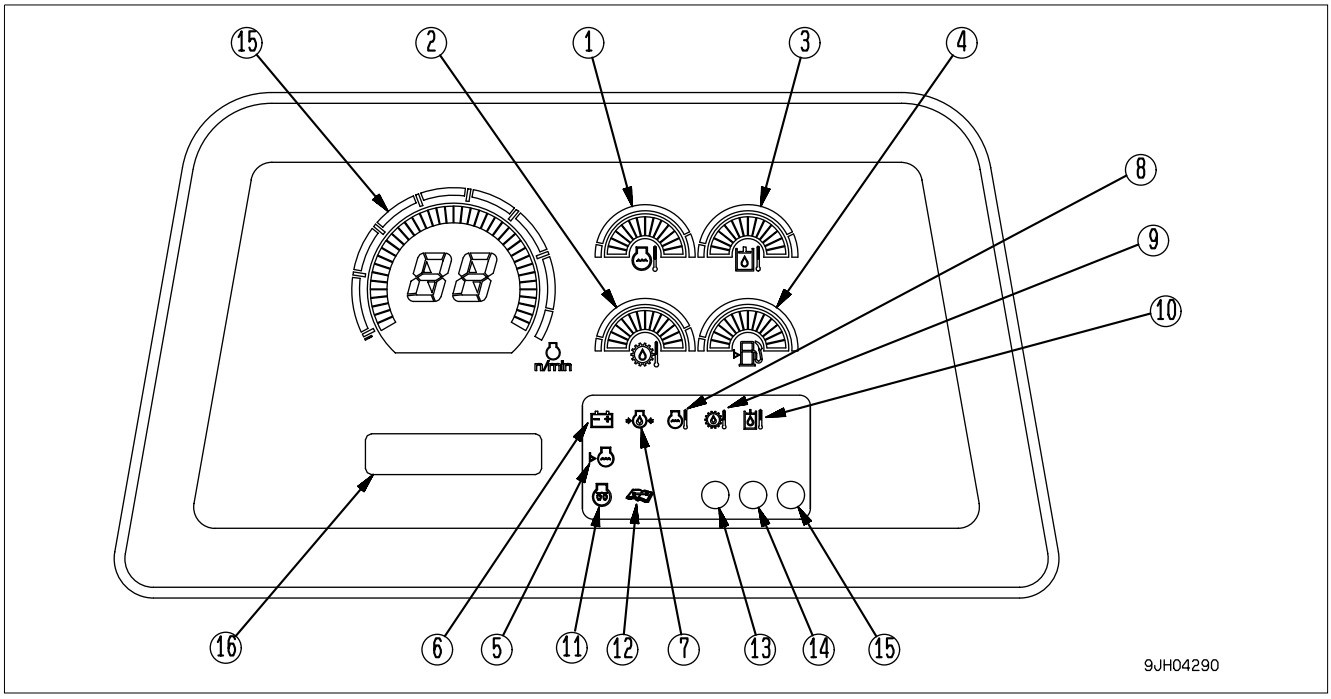

(1) Engine cooling water temperature gauge	(10) Hydraulic oil temperature caution lamp
(2) Power train oil temperature gauge	(11) Engine preheating pilot lamp
(3) Hydraulic oil temperature gauge	(12) Maintenance caution lamp
(4) Fuel gauge	(13) Warning lamp
(5) Radiator coolant level caution lamp	(14) Filter, oil change interval lamp
(6) Charge caution lamp	(15) Display panel A (Speed range, Engine speed)
(7) Engine oil pressure caution lamp	(16) Display panel B (Multi-information)
(8) Engine cooling water temperature caution lamp	(17) Fan reverse rotation lamp
(9) Power train oil temperature caution lamp	

https://truckmanualshub.com/

EXPLANATION OF COMPONENTS

The following is an explanation of the devices needed for operating the machine.
To carry out suitable operations correctly and safely, it is important to understand fully the methods of operating the equipment and the meanings of the displays.

FRONT PANEL

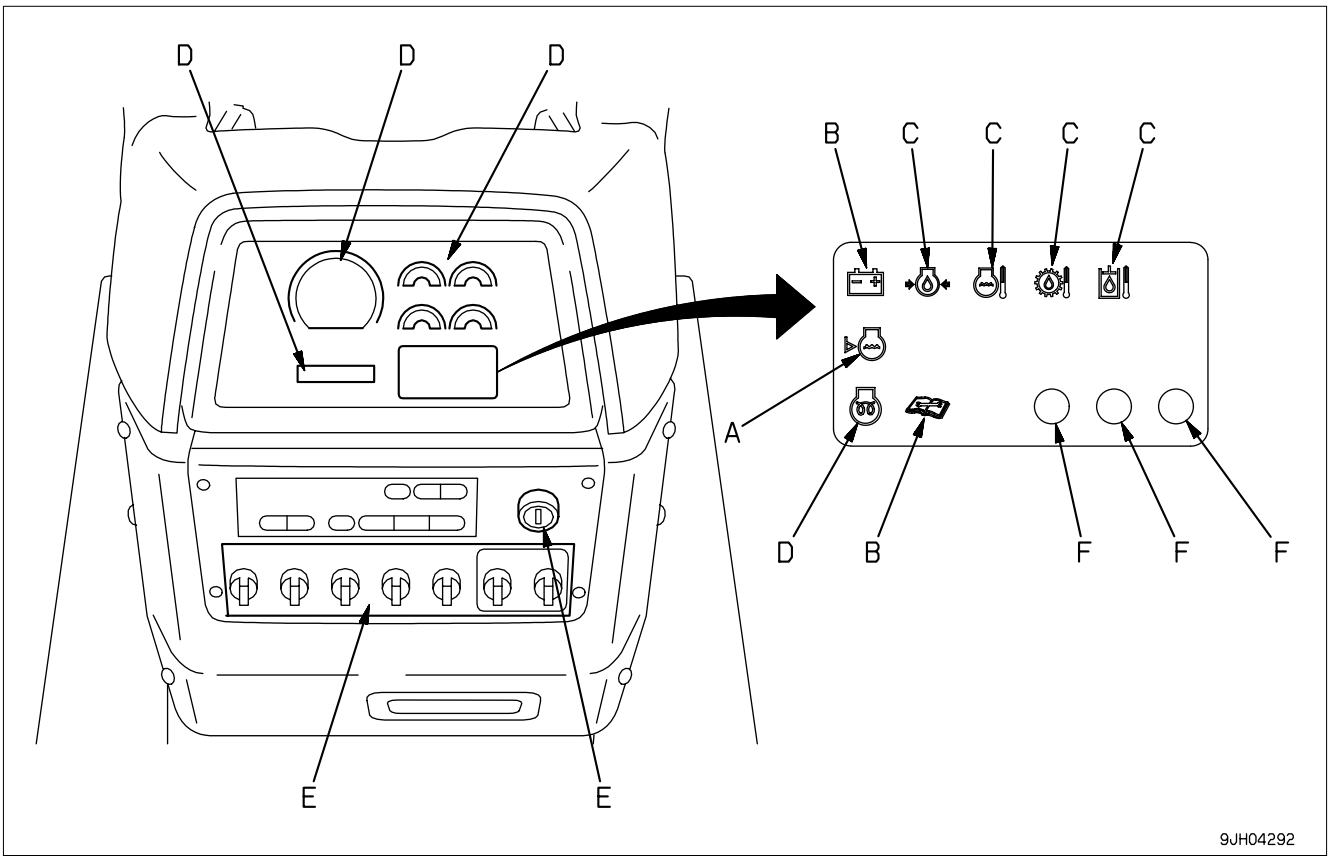

A: Check monitor group	D: Meter group
B: Caution monitor group	E: Switch
C: Emergency caution group	F: Lamp

A: Basic check items (see CHECK MONITOR GROUP (3-7))
Before the engine is started, the basic items among the check before starting items that must be checked are displayed.
If there is any abnormality, the caution lamp for the location of the abnormality flashes.

NOTICE
When carrying out the check before starting, do not rely only on these monitors. Always carry out the inspection items according to the Maintenance section or Section OPERATION (3-55).
B: CAUTION MONITOR GROUP (see “CAUTION MONITOR GROUP (3-8)“)

⚠ CAUTION

If these caution lamp flash, check and repair the appropriate location as soon as possible.

These are items, which need to be observed while the engine is running. If any abnormality occurs, items, which need to be repaired as soon as possible, are displayed.
If there is any abnormality, the appropriate monitor lamp will flash to indicate the location of the abnormality.

https://truckmanualshub.com/

C: EMERGENCY CAUTION ITEMS (See “EMERGENCY CAUTION ITEMS (3-10)“)

CAUTION

If the caution lamp for any of these items flashes, stop the engine immediately or run it at low idling, and take the following action.

This displays those of the abnormality items for which action must be taken immediately when the engine is running.
If there is any abnormality, the monitor showing the location of the abnormality will flash and the alarm buzzer will sound.

D: Meter display portion (see “METER GROUP (3-12)“)
This consists of the preheating pilot lamp, power train oil temperature gauge, engine water temperature gauge, hydraulic oil temperature gauge. fuel gauge, dual/single selector display lamp, display panel A (speed range display, engine speed) and display panel B (multi-information).

E: Switches (for details, see “SWITCH (3-28)“.)
These consist of the starting switch, buzzer cancel switch, front lamp switch, rear lamp switch, auto shift down switch, Preset mode switch, information switch, and Fan selector switch.

F: Lamps (for details, see “LAMP (3-19)“.)
These consist of the warning lamp and filter, oil change interval lamp and Fan reverse rotation lamp.

https://truckmanualshub.com/

CHECK MONITOR GROUP

NOTICE

- **When carrying out checks before starting, do not simply rely on the monitor. Always refer to OPERATION (3-55) to carry out the checks.**
- **Park the machine on level ground and then check the monitor lamps.**
- **Confirm that the monitor lamp lights up for about 2 seconds after the starting switch is turned to ON. If any lamp does not light up, please contact your Komatsu distributor to inspect it.**

REMARK

- **When the starting switch is turned ON before starting the engine, the caution lamp flash for 2 seconds, the warning lamp lights up for 2 seconds, and the alarm buzzer sounds for 2 second.**
- **The caution lamps cannot be checked for breakage until at least 5 seconds after the engine has been stopped.**

This displays the basic items among the check before starting items that must be checked before starting the engine. If there is any abnormality, the caution lamp for the location of the abnormality will flash.

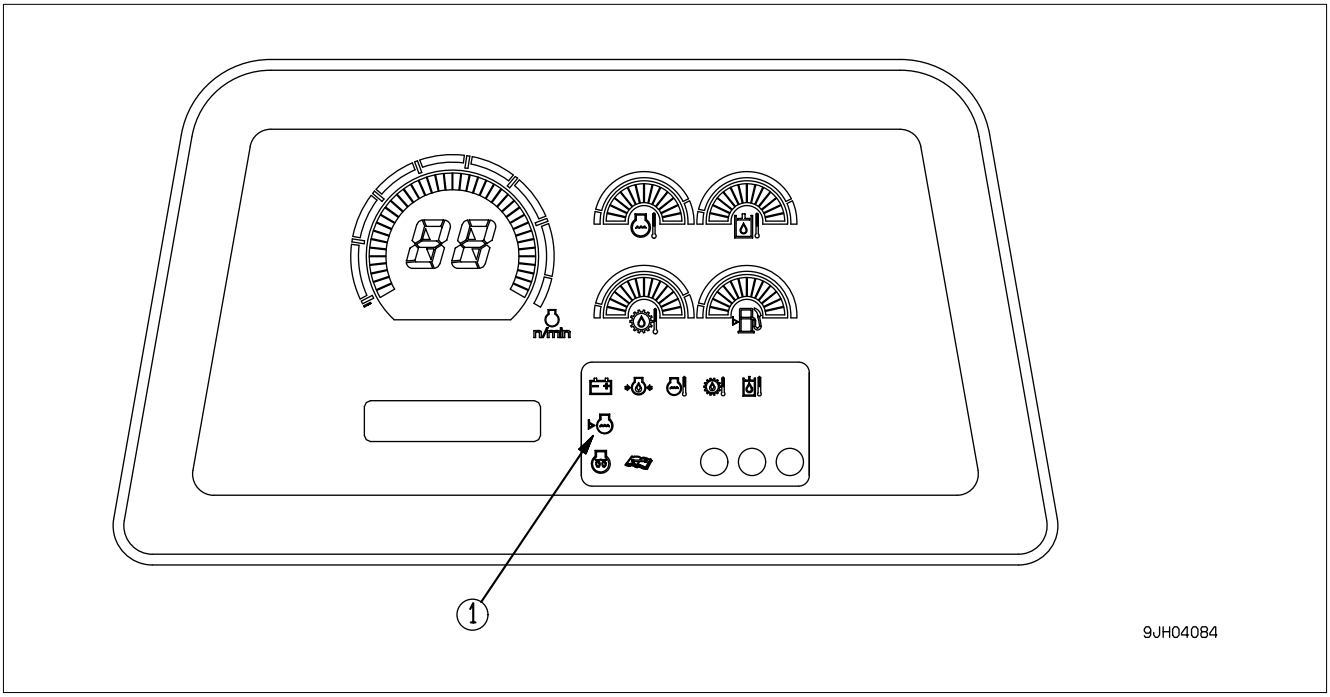

A (1) Radiator coolant level monitor

RADIATOR COOLANT LEVEL MONITOR

This lamp (1) warns the operator that the level of the cooling water in the radiator has gone down.
If the lamp flashes, check the level of the cooling water in the main radiator, and add water.

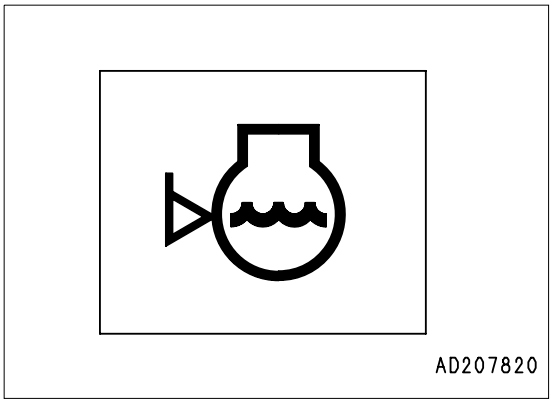

https://truckmanualshub.com/

CAUTION MONITOR GROUP

CAUTION

If these caution lamps item flash, check and repair the appropriate location as soon as possible.

NOTICE
- **Park the machine on level ground and check the monitor lamps.**
- **Confirm that these monitor lamps light for about 2 seconds after the starting switch is turned to ON. If any monitor lamp does not light, ask your Komatsu distributor to inspect it.**

These are items, which need to be observed when the engine is running. If any abnormality occurs, the item needing immediate repair is displayed. If there is any abnormality, the abnormal location on the caution lamp will flash.

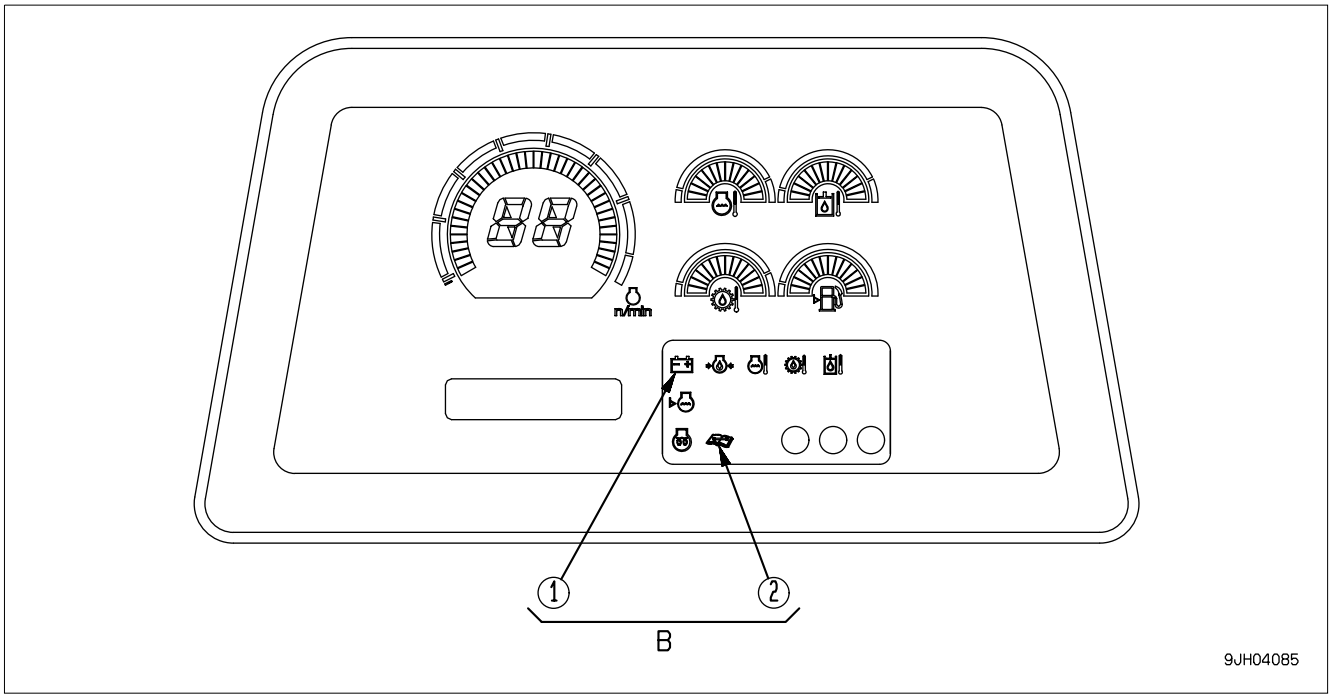

B (1) Charge level monitor	B (2) Maintenance caution lamp

CHARGE MONITOR

This lamp (1) indicates an abnormality in the charging system while the engine is running.
If the monitor lamp flashes, check the V-belt tension. If any abnormality is found, see “OTHER TROUBLE (3-112)“.

REMARK
This monitor lamp lights, when the starting switch is turned to ON immediately after the engine is started or immediately before the engine is stopped. It does not indicate an abnormality.

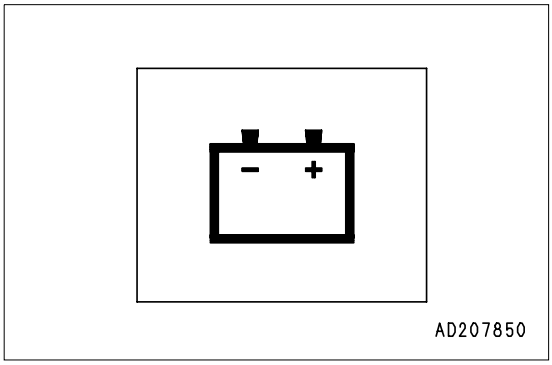

https://truckmanualshub.com/

MAINTENANCE CAUTION LAMP

This monitor (2) flashes when the filter or oil change interval has been reached. SWITCH DISPLAY PANEL B (Multi-information) (3-14) to the maintenance mode and check or replace the applicable filter or oil.

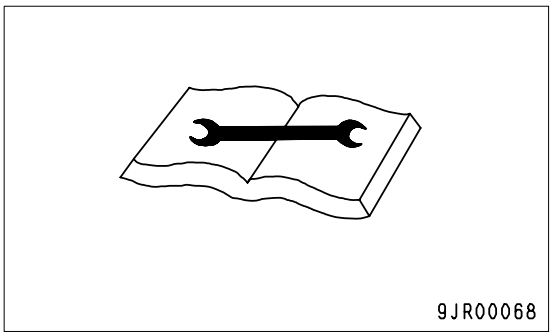

https://truckmanualshub.com/

EMERGENCY CAUTION ITEMS

CAUTION

If the caution lamp for any of these items flashes, stop the engine immediately or run it at low idling, and take the following action.

NOTICE
- **Park the machine on level ground and check the monitor lamps.**
- **Confirm that these caution lamps light for about 2 seconds after the starting switch is turned to ON. If any monitor lamp does not light, ask your Komatsu distributor to inspect it.**

These items need to be observed while the engine is running. If any abnormality occurs, items that need to be repaired immediately are displayed.
If there is any abnormality, alarm buzzer sounds intermittently and the abnormal location on the caution lamp will flash.

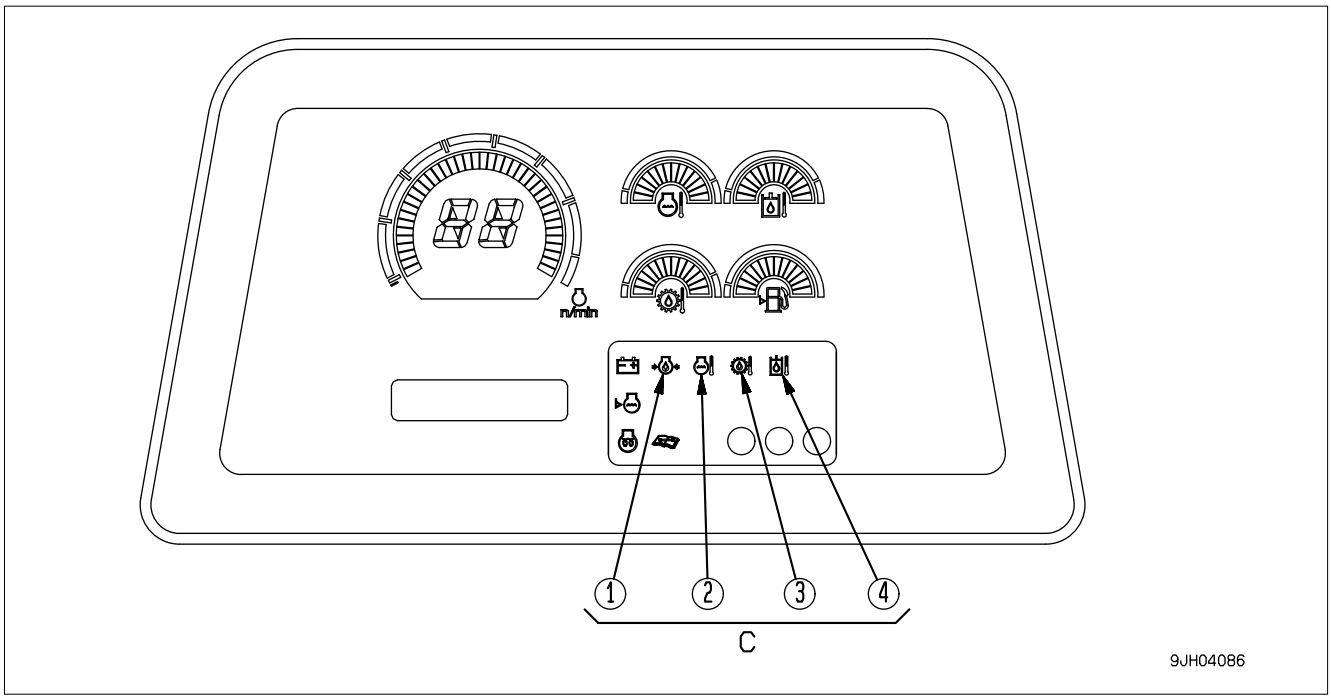

C (1) Engine oil pressure caution lamp	C (2) Engine cooling water temperature caution lamp
C (3) Power train oil temperature caution lamp	C (4) Hydraulic oil temperature caution lamp

ENGINE OIL PRESSURE CAUTION LAMP

This lamp (1) indicates a low engine oil pressure.
If the monitor lamp flashes, stop the engine and check it immediately.

REMARK
The alarm buzzer sounds, when the starting switch is turned to ON immediately after the engine oil changed. It does not indicate an abnormality.

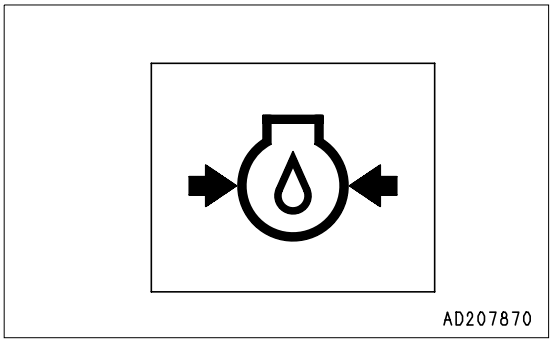

https://truckmanualshub.com/

ENGINE COOLING WATER TEMPERATURE MONITOR

This lamp (2) indicates a rise in the cooling water temperature.
When the monitor lamp flashes, run the engine at the low idling speed until the green range of the engine water temperature gauge lights.

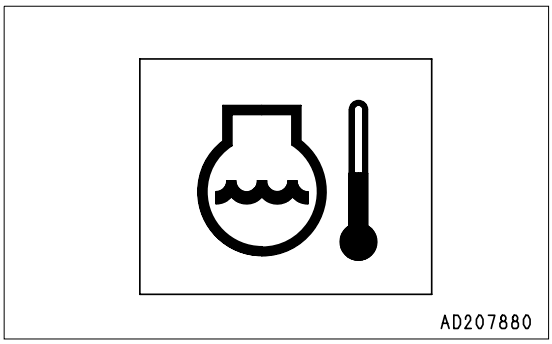

POWER TRAIN OIL TEMPERATURE MONITOR

This lamp (3) indicates a rise in the oil temperature of the torque converter outlet.
When the monitor lamp flashes, run the engine at the low idling speed until the green range of the power train oil temperature gauge lights.

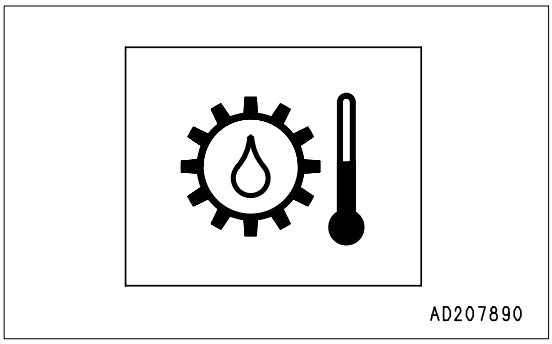

HYDRAULIC OIL TEMPERATURE MONITOR

This lamp (4) indicates a rise in the hydraulic oil temperature.
When the monitor lamp flashes, stop the machine and run the engine at the low idling speed until oil temperature falls.

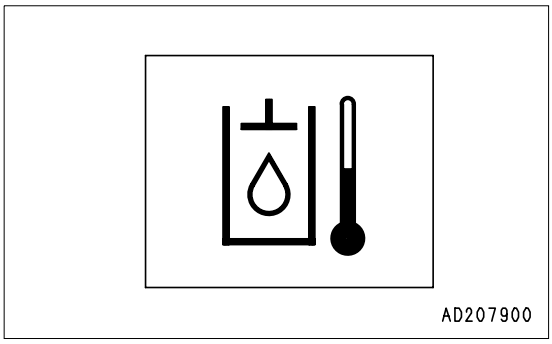

https://truckmanualshub.com/

METER GROUP

NOTICE

While the engine is at rest, turn the starting switch ON to see if engine cooling water temperature gauge, power train oil temperature gauge, fuel gauge and monitor lamps all light up.
If they do not, ask your Komatsu distributor to inspect it.

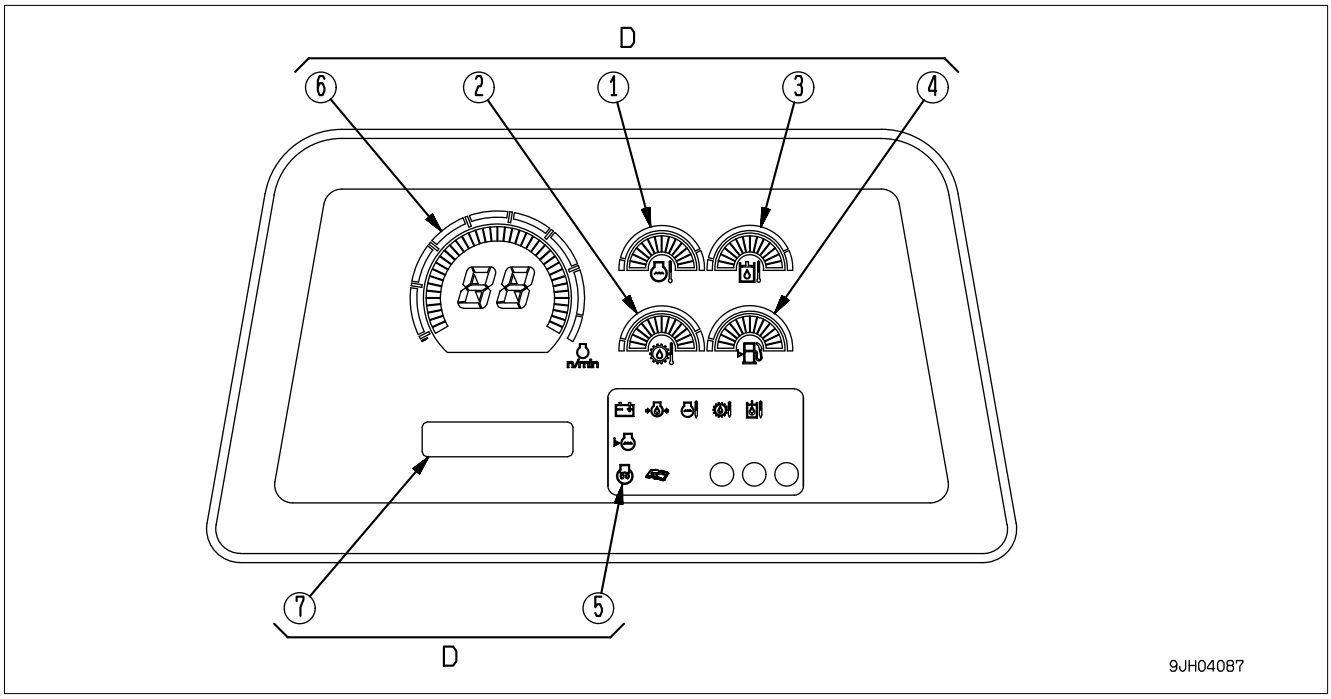

D (1) Engine cooling water temperature gauge	D (6) Engine preheating pilot lamp
D (2) Power train oil temperature gauge	D (7) Display panel A (Speed range display)
D (3) Hydraulic oil temperature gauge	D (7) Display panel B (multi-information)
D (4) Fuel gauge	

ENGINE COOLING WATER TEMPERATURE GAUGE

This gauge (1) indicates the temperature of the cooling water.
If the temperature is normal during operation, the green range (B) will light.
If the red range (C) lights up during operation, move the Fuel control dial to lower the engine speed to approx. 3/4 of the full speed, and run until the water temperature enters the green range (B).
During operation, if red range (C) lights up, the engine water temperature monitor flashes, and the alarm buzzer sounds, stop the machine, run the engine at low idling, and wait for the water temperature to go down to green range (B) .
(A): White range
(B): Green range
(C): Red range

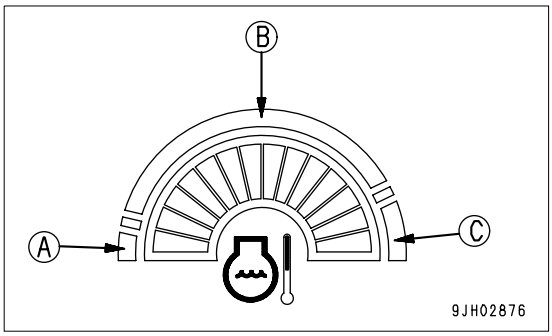

NOTICE

If the water temperature gauge often enters the red range (C), check the radiator for clogging.

https://truckmanualshub.com/

POWER TRAIN OIL TEMPERATURE GAUGE

This gauge (2) indicates the oil temperature of the torque converter outlet. If the temperature is normal during operation, the green range will light.
If the red range (C) lights up during operation, move the fuel control lever to lower the engine speed to approx. 3/4 of the full speed, reduce the load and run until the oil temperature enters the green range (B).
If the power train oil temperature enters the red range (C) , and the power train oil temperature caution lamp flashes and the alarm buzzer sounds, stop the machine and run at low idling until the oil temperature enters the green range (B) .
(A): White range
(B): Green range
(C): Red range

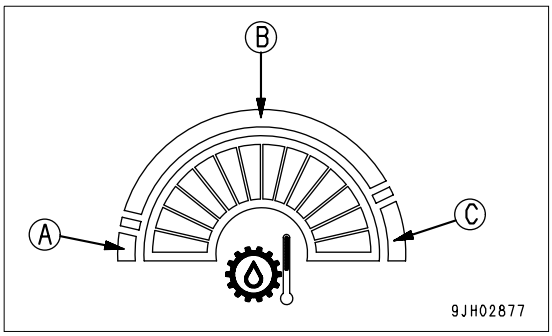

NOTICE
If the power train oil temperature gauge often enters the red range (C), we recommend you to lower the travel speed one range (for example, F2 → F1) to reduce the load on the power train when operating.

HYDRAULIC OIL TEMPERATURE GAUGE

This gauge (3) indicates the oil temperature of the hydraulic oil. If the temperature is normal during operation, the green range (B) will light.
If the red range (C) lights up during operation, move the fuel control lever to lower the engine speed to approx. 3/4 of the full speed, reduce the load and run until the oil temperature enters the green range (B).
(A): White range
(B): Green range
(C): Red range

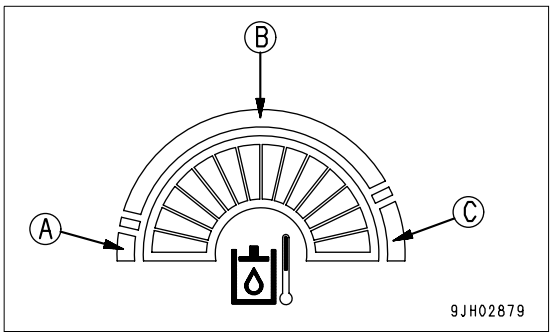

FUEL LEVEL GAUGE

This meter (4) shows the level of fuel in the fuel tank.
During normal operation, the green range (B) should be lighted up.
If the red range (A) lights up during operation, add fuel immediately. If this is not done, the engine speed will become irregular or an error display will be shown on the monitor.
(A): Red range
(B): Green range

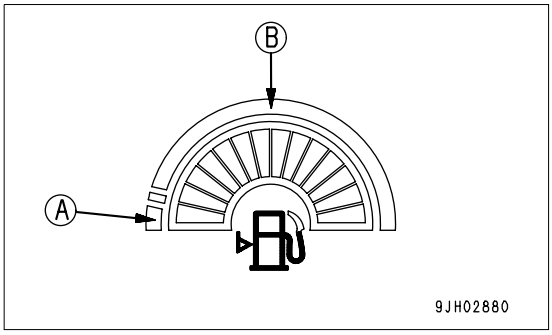

REMARK
- **The display is not proportional to the amount of fuel remaining.**
- **If only the red range (A) lights up, there is less than 60 liters of fuel remaining.**

https://truckmanualshub.com/

ENGINE PREHEATING PILOT LAMP

This lamp (5) indicates that the engine is being preheated by the electrical heater during cold weather.
The engine controller detects the water temperature and automatically actuates the preheating in low temperatures when starting the engine.

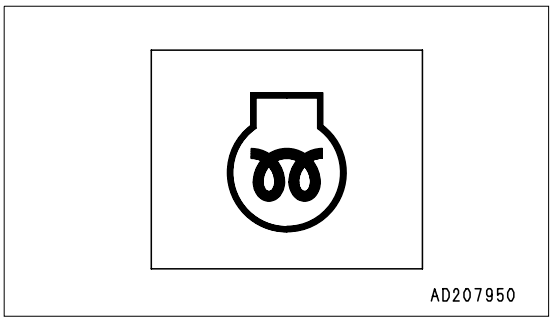

DISPLAY PANEL A (speed range display, engine speed)

Meter (6) displays the transmission speed range being used on the machine and engine speed.

- When the transmission is in 1st FORWARD, the display shows F1, and when it is in 1st REVERSE, the display shows R1.
- The peripheral bar graph indicates the engine speed. When the red range lights up during running, shift the gear to a lower speed to run the engine at a speed within the green range.

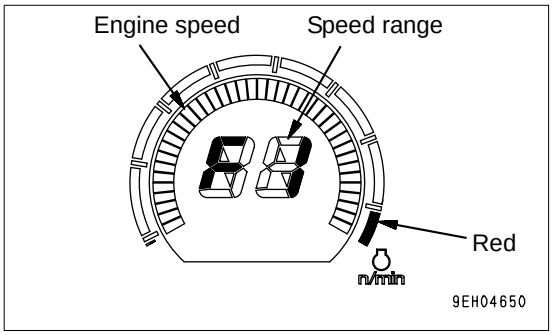

SWITCH DISPLAY PANEL B (Multi-information)

This monitor (7) displays information related to the condition of the machine on the top and bottom lines of the display portion. The content of the display can be switched by operating the Information switch and Buzzer cancel switch.

(1) Operating mode (normal operation screen)

Use this mode when operating the machine.

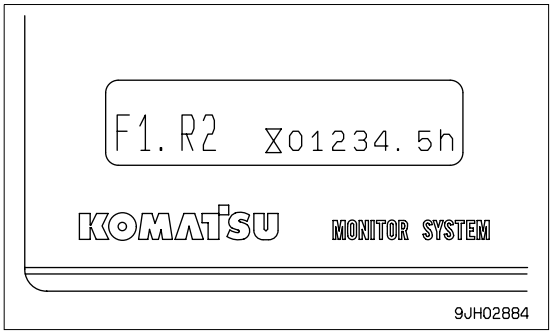

REMARK
When the starting switch is turned from the OFF position to the ON position, the multi-information is set to the operating mode.

The shift mode selected by operation of the GEARSHIFTING OPERATION USING PRESET MODE FUNCTION (3-83) through the shift mode selection is displayed on the left side of the monitor.
The total operating hours of the machine is displayed at the bottom right of the monitor. (Use the service meter function display to set the interval for periodic maintenance.)
When the engine is running, the service meter advances, even if the machine is not being used.
When the engine is running, the hourglass mark pilot display at the side of the meter lights up to show that the meter is advancing.
The meter advances by 1 for every hour of operation, regardless of the engine speed.
If there is a failure in the machine, the failure code is also displayed on the top line. If a failure code is displayed, carry out the remedy given in “OTHER TROUBLE (3-112)“.

https://truckmanualshub.com/

(2) Maintenance mode

The maintenance mode is displayed by continuing to turn the information switch in the ◇ direction for 2.5 seconds.
For details, see “METHOD OF USING DISPLAY PANEL B (Multi-information) (3-21)“.

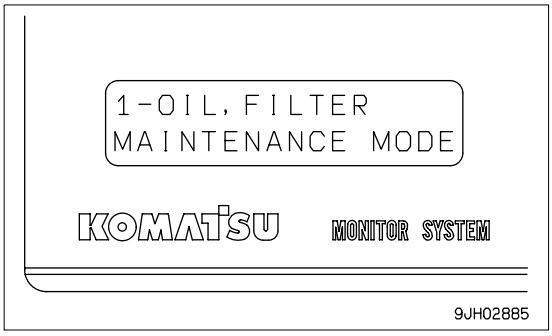

https://truckmanualshub.com/

SWITCH

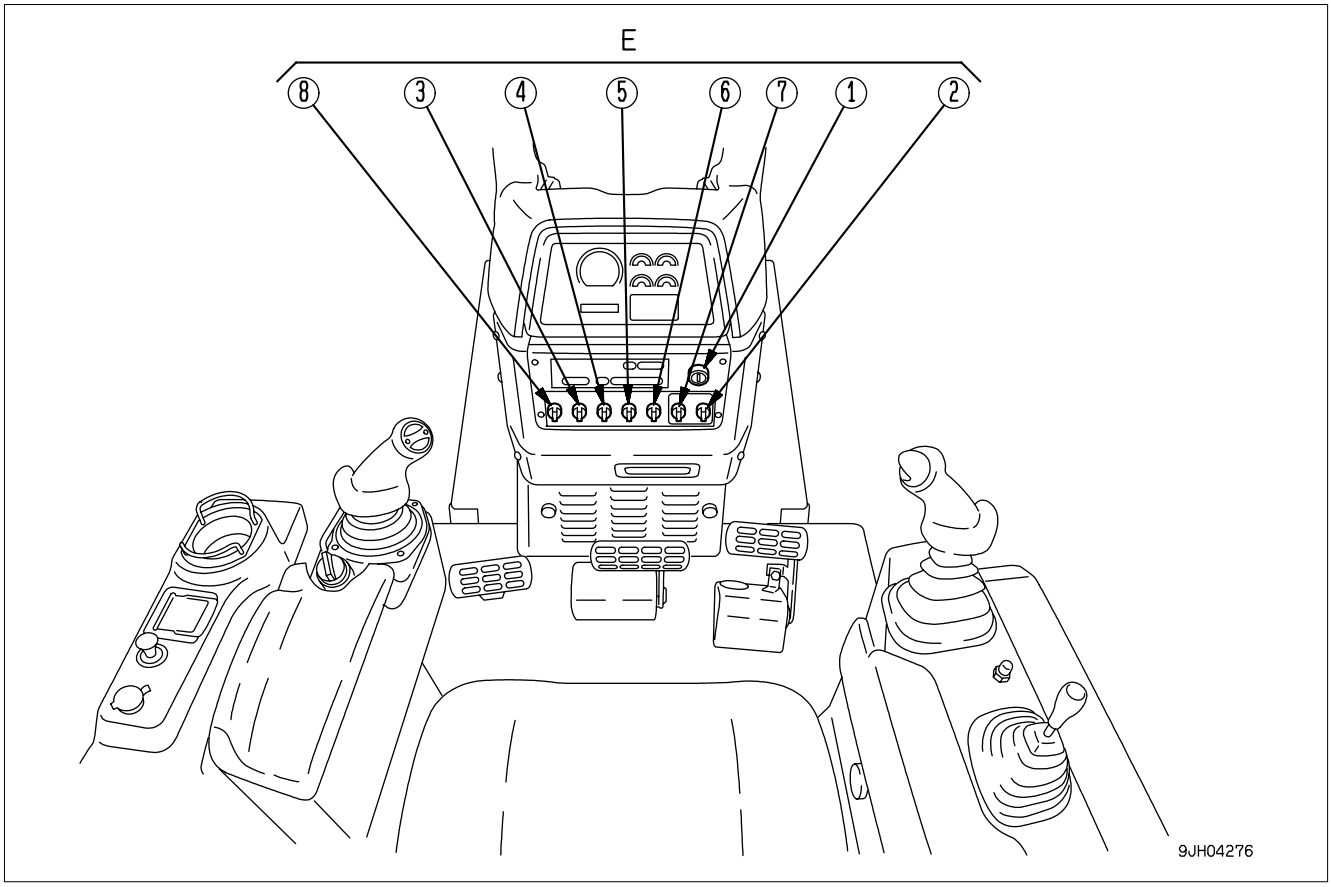

E (1) Starting switch	E (5) Rear lamp switch
E (2) Buzzer cancel switch	E (6) Fan selector switch
E (3) Preset mode switch	E (7) Information switch
E (4) Head lamp switch	E (8) Auto shift down switch

STARTING SWITCH

This switch (1) is used to start the engine.

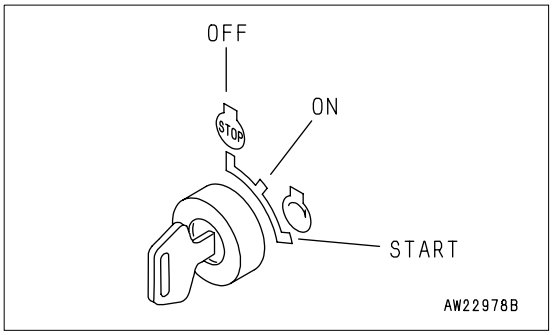

OFF
Key insertion-withdrawal position. None of electrical circuits activate.

ON
Charging and electric device circuits activate. Keep key at ON after starting.

START
At this key position, the starting motor will crank the engine. Immediately after starting the engine, release the key which will automatically return to the ON position.

https://truckmanualshub.com/

BUZZER CANCEL SWITCH

When this switch (2) is operated to the left or right, the alarm buzzer stops.
When the information monitor is in the maintenance mode, this switch can be operated to move the cursor to the left or right.
(a) position: Cancel
(c) position: Select

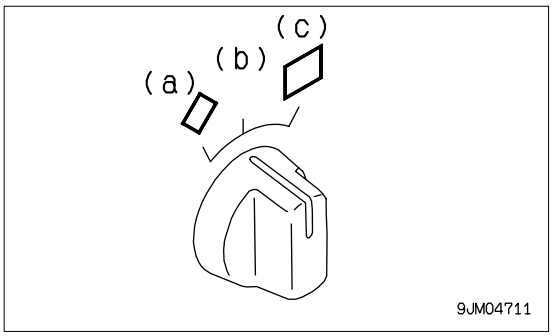

PRESET MODE SWITCH

Turn the switch (3) to the right to set the desired transmission speed range before starting (F1-R1,F1-R2,F2-R2) .
Position (a) : Manual mode
Position (b) : Preset mode

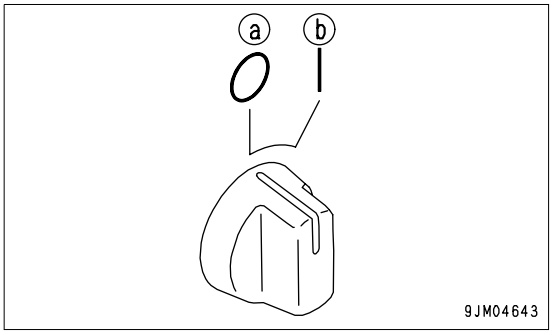

FRONT LAMP SWITCH

This switch (4) lights up when the front lamp, left and right working lamps on the front fender, and panel lamp light up.
(a) OFF position: Goes out
(b) ON position: Lights up

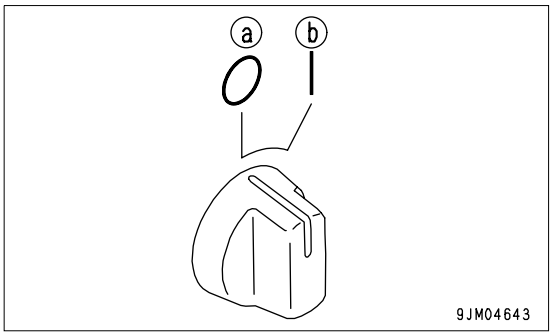

REAR LAMP SWITCH

This switch (5) lights up when the rear lamp and panel lamp light up.
(a) OFF position: Lamps are out
(b) ON position: Lamps light up

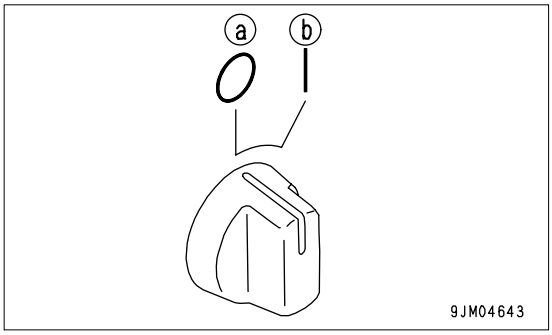

https://truckmanualshub.com/

FAN ROTATION SELECTOR SWITCH

Use this switch (6) to switch the fan to reverse or cleaning mode.
Position (a): Normal mode
Position (b): Reverse mode
Position (c): Cleaning mode

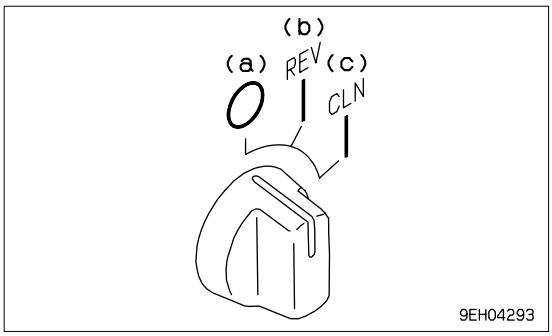

Use the reverse mode to maintain the temperature in cold areas. Use the cleaning mode to remove dirt when cleaning the radiator.
In the cleaning mode, the fan always rotates at 100% speed.
Always stop the engine before operating the fan selector switch.
If the fan selector switch is operated when the engine is running, the fan operation confirmation lamp will flash to indicate that it is impossible to operate the switch.

INFORMATION SWITCH

This switch (7) is used to carry out the switching of the information monitor display mode and the switching of the cursor with the maintenance mode.
(a) position: Cursor moves to left
(c) position: Cursor moves to right

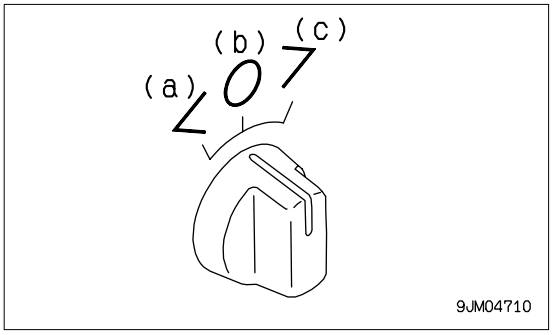

AUTO SHIFT DOWN SWITCH

When this switch (8) is operated to the right, if the travel speed drops because of the load conditions when traveling, the transmission automatically shifts to low speed.
(a) OFF position: Automatic operation canceled
(b) ON position: Automatically shifts down to low speed

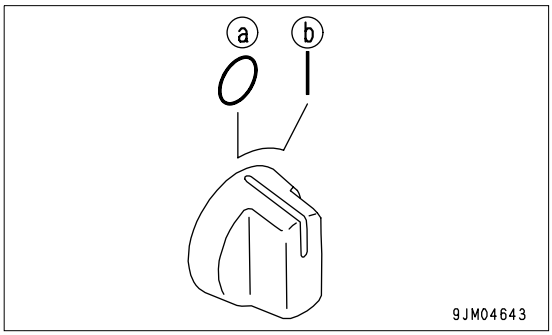

For details, see “AUTO SHIFT DOWN OPERATION (3-84)“.

https://truckmanualshub.com/

LAMP

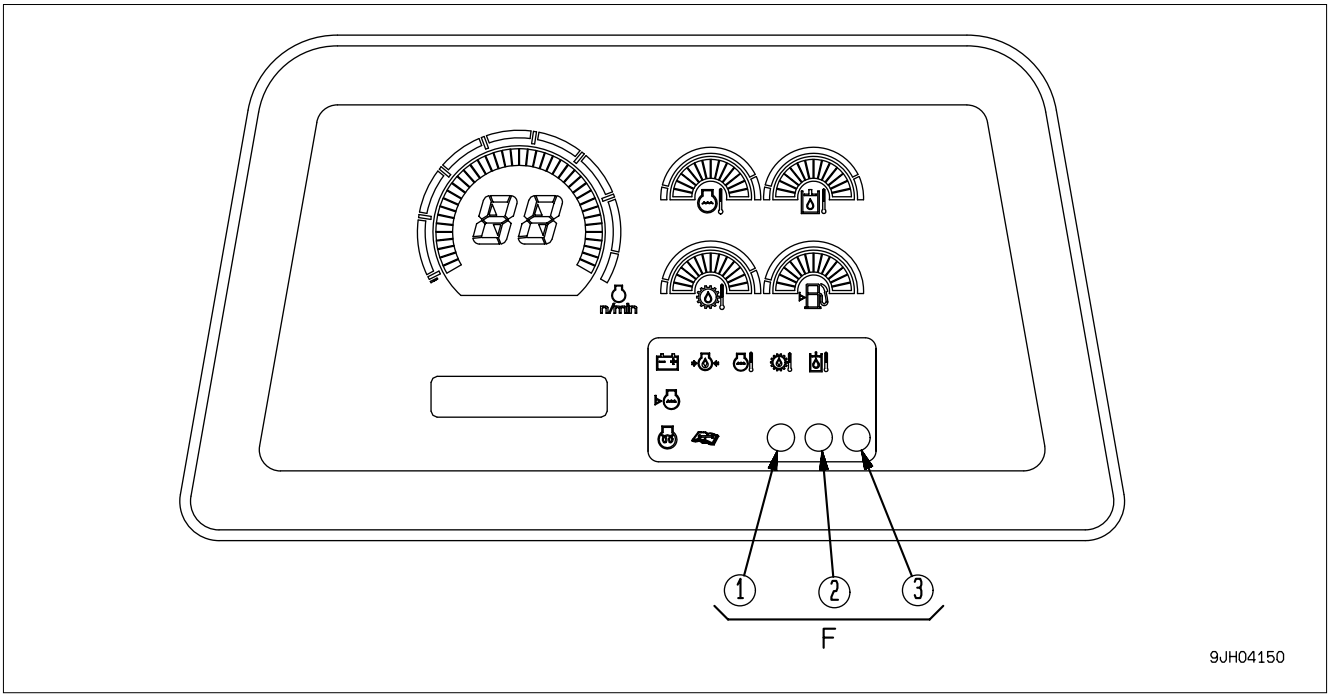

F (1) Warning lamp	F (3) Fan reverse rotation lamp
F (2) Filter, oil change interval lamp	

WARNING LAMP

NOTICE
If the alarm buzzer sounds, stop work immediately and carry out inspection and maintenance of the appropriate point.

When the caution lamp for the B CAUTION and C CAUTION groups on the machine monitor system flashes, and an abnormality has occurred in the electronic control system, this lamp (1) also flashes at the same time.
If the lamp flashes, check the monitor panel to locate the abnormality.
When the monitor inside the C CAUTION group flashes, the alarm buzzer also sounds continuously.

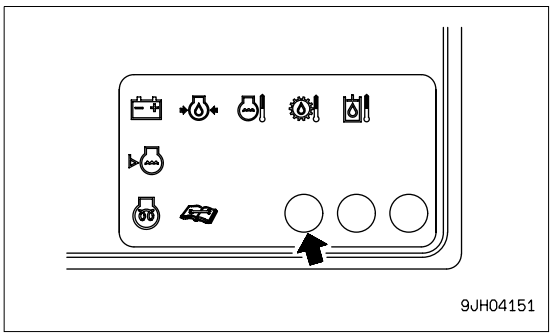

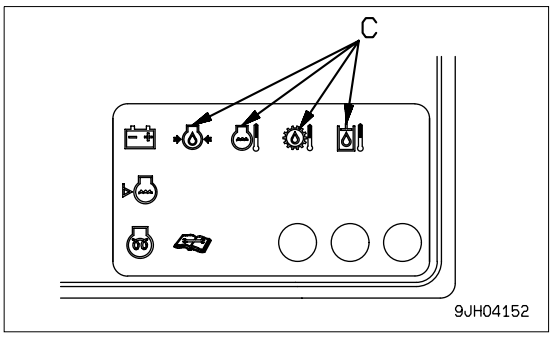

https://truckmanualshub.com/

FILTER, OIL CHANGE INTERVAL LAMP

This lamp lights up when it comes near the time for replacing the filter or oil.

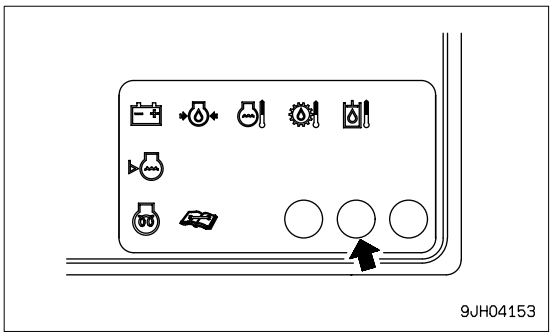

FAN OPERATION CONFIRMATION LAMP

This lamp lights up when the fan is rotating in reverse. If the fan selector switch is operated when the engine is running, this lamp flashes to warn the operator that the fan operation cannot be switched.

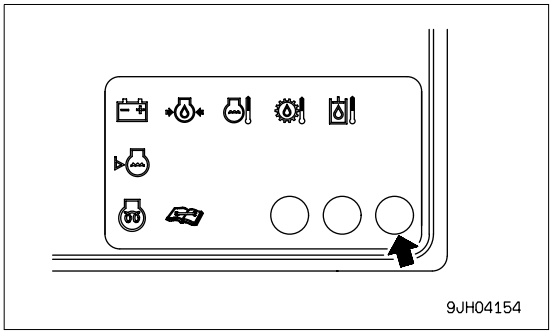

https://truckmanualshub.com/

METHOD OF USING DISPLAY PANEL B (Multi-information)

EXPLANATION OF MODES AND CONTROLS

- Display panel B (1) has the function of displaying the following four types of mode. (The diagram on the right shows the normal screen before the mode display.)
  Maintenance mode
  This displays the time for replacing the filters or oil.
  PM clinic auxiliary mode
  This displays the engine speed and the oil pressure in the hydraulic circuits.
  Fault display mode
  This displays the fault code is related to the electronic control.
  Adjustment mode
  This adjusts the brightness and contrast of the display.

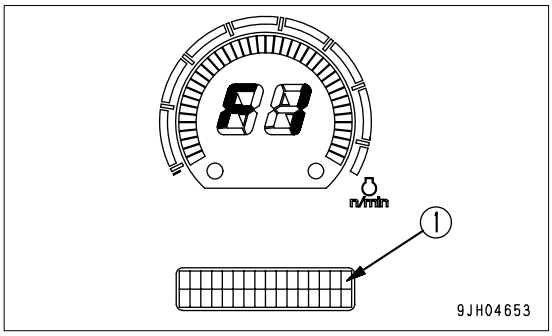

- There are variations (sub-items) in the four types of mode. For an explanation of the variations, see the following items.
  METHOD OF USING MAINTENANCE MODE (3-23)
  METHOD OF USING PM CLINIC AUXILIARY MODE (3-24)
  METHOD OF USING FAULT CODE DISPLAY MODE (3-24)
  METHOD OF USING USER ADJUST MODE (3-25)
- Each mode is operated by using information switch (2) and buzzer cancel switch (3) on the dashboard in front of the operator's seat.
  After operating the switch, release the switch, and the switch will return automatically to the center position as shown in the diagram on the right.
  The functions of each position of the switches are as follows.
  <: Moves mode to left
  >: Moves mode to right
  ◇: Selects mode
  ☐: Cancels mode

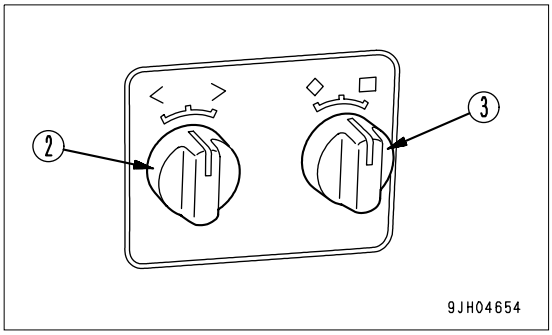

- The four types of mode can be selected in a cycle by operating information switch (2) to > and < to give the following sequence: Maintenance mode ←→ PM clinic auxiliary mode ←→ Fault code display mode ←→ Adjustment mode ←→ Maintenance mode.
- From the normal mode before giving the mode display, if buzzer cancel switch (3) is operated to ◇ and held for 2.5 seconds, the maintenance mode is displayed. After that, if information switch (2) is operated to >, the mode changes to the PM clinic auxiliary mode. If information switch (2) is operated to <, the mode changes to the user adjust mode.
- When any mode is being displayed, if the buzzer cancel switch is operated to ☐, the screen returns the normal screen shown before the mode display.

METHOD OF SELECTING MODES

1. When moving from the normal operation display to a user mode, the maintenance mode is displayed. Use the controls to change the mode as follows.
   > position: Go to PM clinic auxiliary mode
   < position: Go to user adjust mode
   ☐ position: Go to normal operation screen
   ◇ position: Go to maintenance mode selection screen
   20.

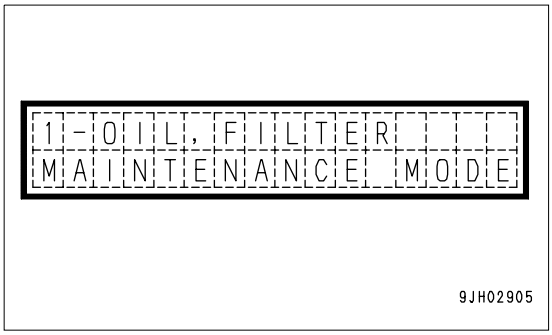

https://truckmanualshub.com/

2. The diagram on the right shows the screen display for the PM clinic auxiliary mode. Use the controls to change the mode as follows.
   > position: Go to fault code display mode
   < position: Go to maintenance mode
   ☐ position: Go to normal operation screen
   ◇ position: Go to PM clinic auxiliary mode selection item screen

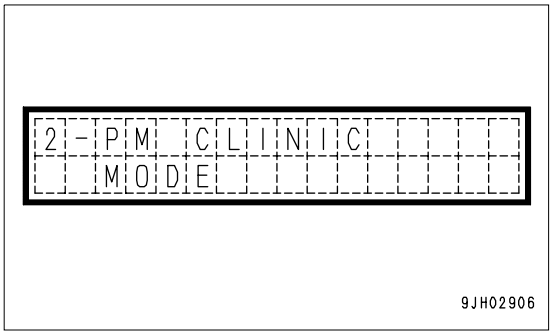

3. The diagram on the right shows the screen display for the fault code display mode. Use the controls to change the mode as follows.
   > position: Go to adjustment mode
   < position: Go to PM clinic auxiliary mode
   ☐ position: Go to normal operation screen
   ◇ position: Go to fault code selection item screen

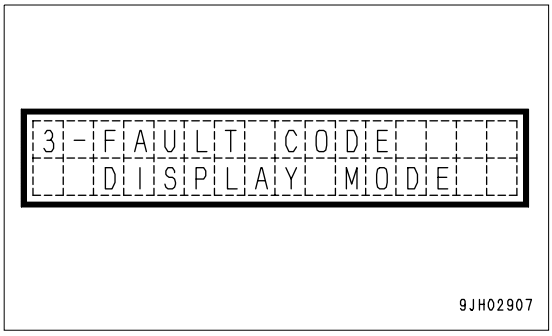

4. The diagram on the right shows the screen display for the user adjust mode. Use the controls to change the mode as follows.
   > position: Go to maintenance mode
   < position: Go to fault code display mode
   ☐ position: Go to normal operation screen
   ◇ position: Go to user adjust mode selection item screen

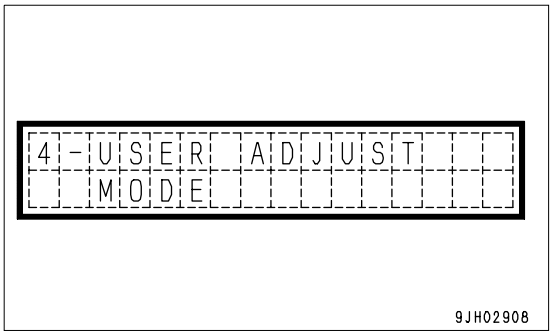

https://truckmanualshub.com/

METHOD OF USING MAINTENANCE MODE

NOTICE

This function is only a guideline. If dirty or oil or filters are found during daily maintenance, replace them immediately.

If the controllers or monitor panel are replaced, the timer for this function will not work properly. Please contact your Komatsu distributor for replacement.

The maintenance mode shows the replacement interval for the oil filters and oil on the monitor.
The content of the display is as follows.
(1) The item is displayed.
(2) The time remaining until replacement is displayed.
(3) The number of times that replacement has been made until now is displayed.

The display items can be displayed in order by operating the information switch to the left or right (<, >).

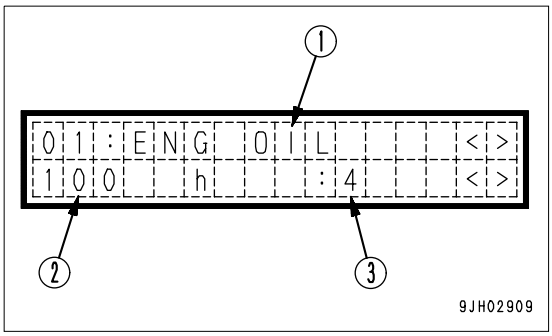

	Display	Item	Time to 1st replacement	Time to 2nd and following replacements
1.	ENG.OIL	Engine oil	500h	500h
2.	ENG.FLT	Engine oil filter	500h	500h
3.	FUEL.FLT	Fuel filter	500h	500h
4.	HYD.FLT	Hydraulic oil filter	500h	2000h
5.	CORR.FLT	Corrosion resistor	1000h	1000h
6.	BYPS.FLT	Bypass filter (*)	0h	0h
7.	DAMP.OIL	Damper oil	2000h	2000h
8.	OIL	Final drive oil	500h	2000h
9.	HYD.OIL	Hydraulic oil	500h	2000h
10.	POWL.OIL	Power train oil	500h	1000h
11.	POWL.FLT	Power train oil filter	500h	500h
12.	HSS.FLT	HSS charge filter (*)	0h	0h

(*) Although the item of the mark is displayed, it is not used with this machine.

When the oil or filter has been replaced, select the applicable item, then operate the buzzer cancel switch to ◇.
The screen will ask if you want to display the replacement history.
Operate the information switch to select YES, then operate the buzzer cancel switch to ◇. The replacement account will increase by 1, the replacement interval will be reset, and the oil, filter change interval lamp will go out.
When this is done, if the maintenance caution lamp does not go out, there is another item close to the replacement time, so check the situation.

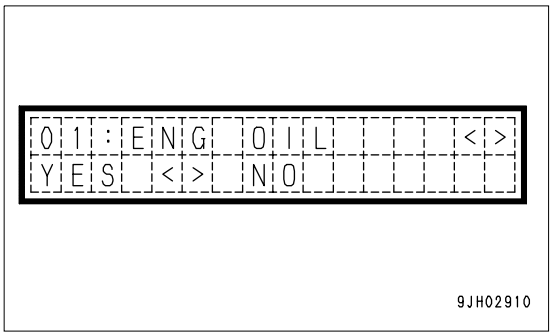

https://truckmanualshub.com/

REMARK
To return to the function selection mode, operate the buzzer cancel switch to □.

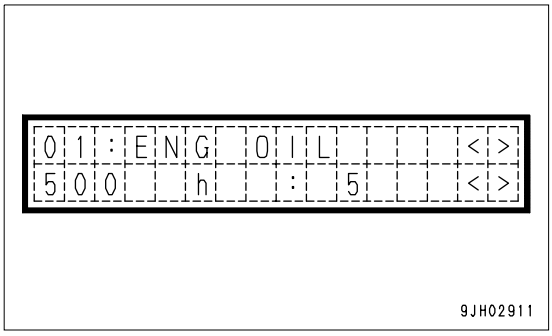

METHOD OF USING PM CLINIC AUXILIARY MODE

⚠ CAUTION

When moving the work equipment or setting the transmission to the travel position when carrying out measurements, check carefully that the situation is safe.

The PM clinic auxiliary mode displays the engine speed, hydraulic oil pressure, and other items on display panel B.
Display panel B displays the item on the top line (1), and the measured value on the bottom line (2).

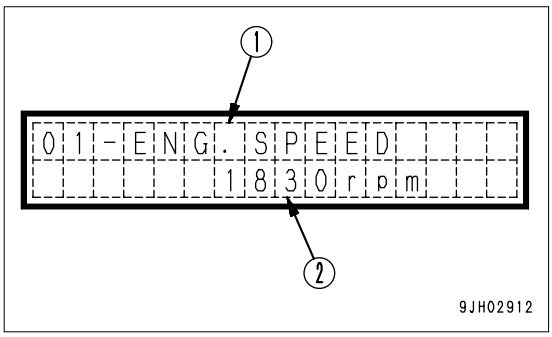

The display items consist of the six items in the table below.
The items can be selected by operating the information switch (<, >).

Display	Item	Measured value
01-ENG.SPEED	Engine speed	Speed (rpm)
02-BOOST PRESSURE	Boost pressure	Pressure (kPa)
03-HYD.PUMP PRES	Hydraulic oil pressure	Pressure (MPa)
04-BATTERY VOLT	Battery voltage	Voltage (mV)

REMARK
- **Items such as the engine speed fluctuate and are difficult to see during the measurement. In such cases, operate the buzzer cancel switch to ◇. This makes it possible to hold the display of the value.**
- **To cancel this mode, operate the buzzer cancel switch again to ◇.**
- **To return to the function selection mode, operate the buzzer cancel switch to □.**

METHOD OF USING FAULT CODE DISPLAY MODE

NOTICE
The fault items observed by this function are connected with the electronic control, so even if a fault code is not displayed, there is probably some problem with the machine. If the operator feels any abnormality with the machine, the machine should be stopped immediately and checked.

https://truckmanualshub.com/

When any disconnection or short circuit in any sensor is detected, the location and fault code are displayed by a 6-digit code on display panel B. When contacting your Komatsu distributor, inform your distributor of the code at the same time.
If the failure observation function has not grasped the condition of the machine, the display is as shown in the diagram on the right.

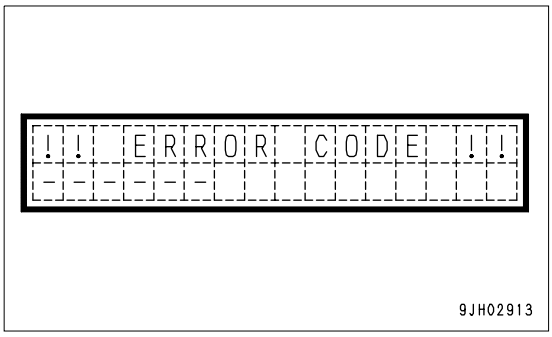

With this function, existing failures can be displayed up to a maximum of 20 items.
If multiple failures are occurring, the display automatically changes every 2 seconds, so check the code.
The display is shown repeatedly.

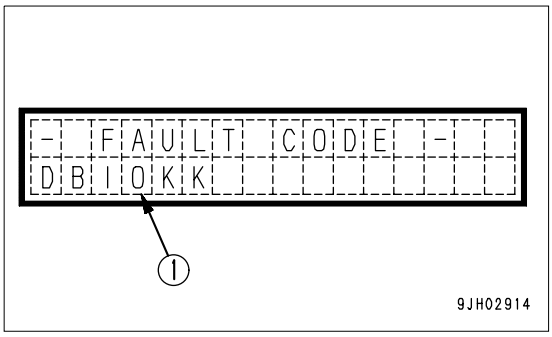

REMARK
To return to the function selection mode, operate the buzzer cancel switch to ☐.

METHOD OF USING USER ADJUST MODE

With the user adjust mode, the brightness of the panel screen backlighting and the contrast of the liquid crystal panel can be changed, or the cooling fan can be set to maximum speed to clean the radiator when it is clogged. These are displayed on display panel B.

1. Adjusting backlighting of liquid crystal display
   The diagram on the right is the mode for adjusting the brightness of the backlighting of the liquid crystal panel. On this screen, operate the buzzer cancel switch to ◇ to switch to the screen to adjust the brightness.

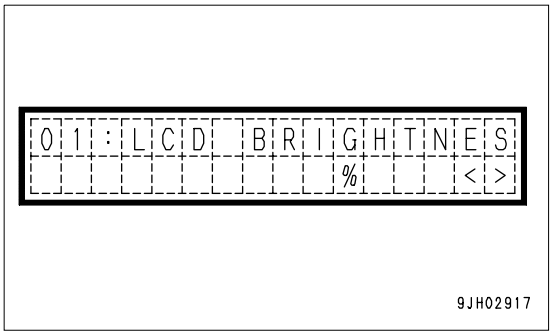

The brightness can be adjusted by operating the information switch.
The higher the number, the brighter the screen becomes; the lower the number, the darker the screen becomes.
> position: Number increases
< position: Number decreases

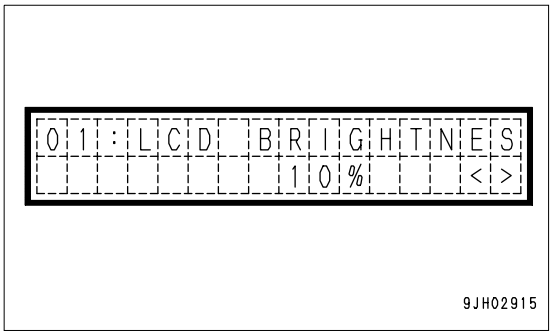

https://truckmanualshub.com/

When the buzzer cancel switch is operated to ◇, the brightness of the liquid crystal display backlighting is set.

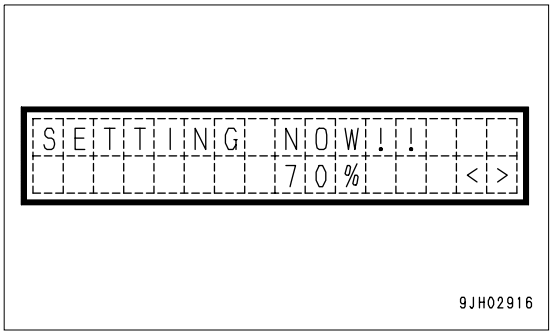

2. Adjusting backlighting of message display
   The diagram on the right is the mode for adjusting the brightness of the backlighting of the message display. On the screen, operate the buzzer cancel switch to ◇ to switch to the screen for adjusting the brightness.

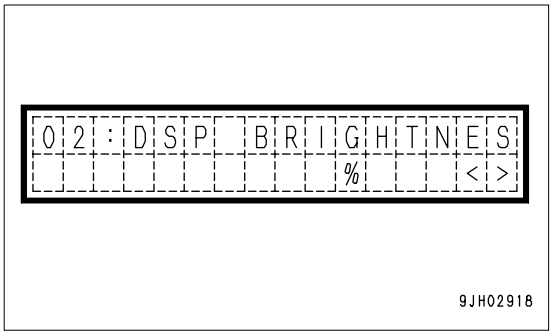

The brightness can be adjusted by operating the information switch.
The higher the number, the brighter the screen becomes; the lower the number, the darker the screen becomes.
> position: Number increases
< position: Number decreases

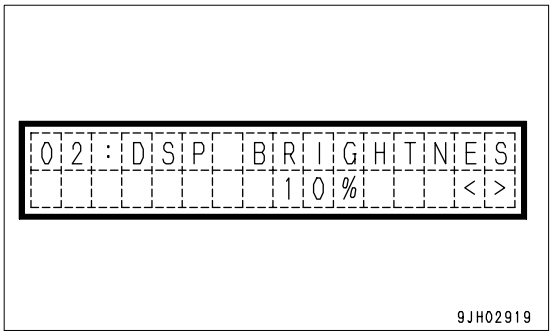

When the buzzer cancel switch is operated to ◇, the brightness of the message display backlighting is set.

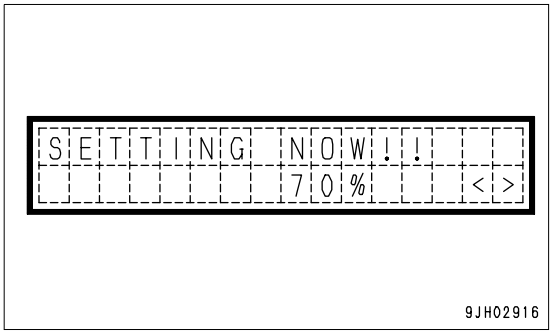

3. Adjusting contrast of liquid crystal message display
   The diagram on the right is the mode for adjusting the contrast of the liquid crystal message display.
   On this screen, operate the buzzer cancel switch to ◇ to switch to the screen to adjust the contrast.

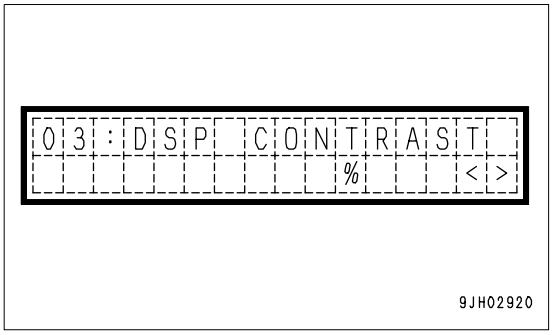

https://truckmanualshub.com/

The contrast can be adjusted by operating the information switch.
The higher the number, the deeper the screen becomes; the lower the number, the lighter the screen becomes.
> position: Number increases
< position: Number decreases

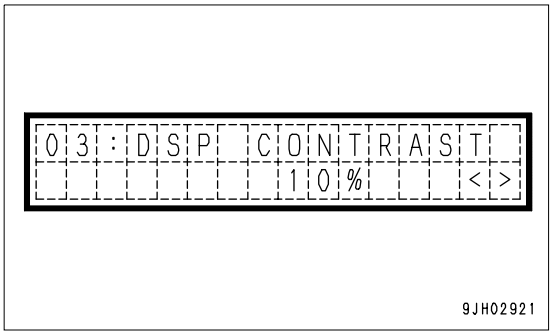

When the buzzer cancel switch is operated to ◇, the contrast of the liquid crystal display is set.

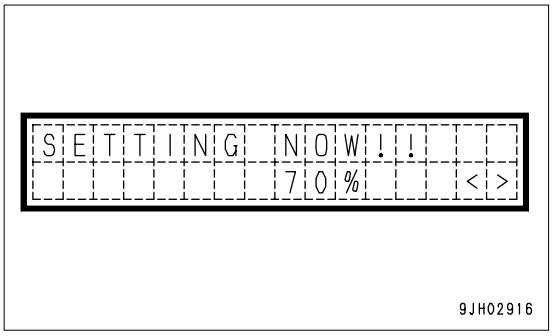

REMARK

- **To return to the function selection mode, operate the buzzer cancel switch to □.**
- **The brightness of the backlighting of the monitor panel differs according to whether the front lamp is lighted up or not. Entering this mode when the front lamps are lighted up makes it possible to adjust the brightness when the front lamps are lighted up. In the same way, entering this mode when the front lamps are not lighted up makes it possible to adjust the brightness when the front lamps are not lighted up.**

https://truckmanualshub.com/

SWITCH

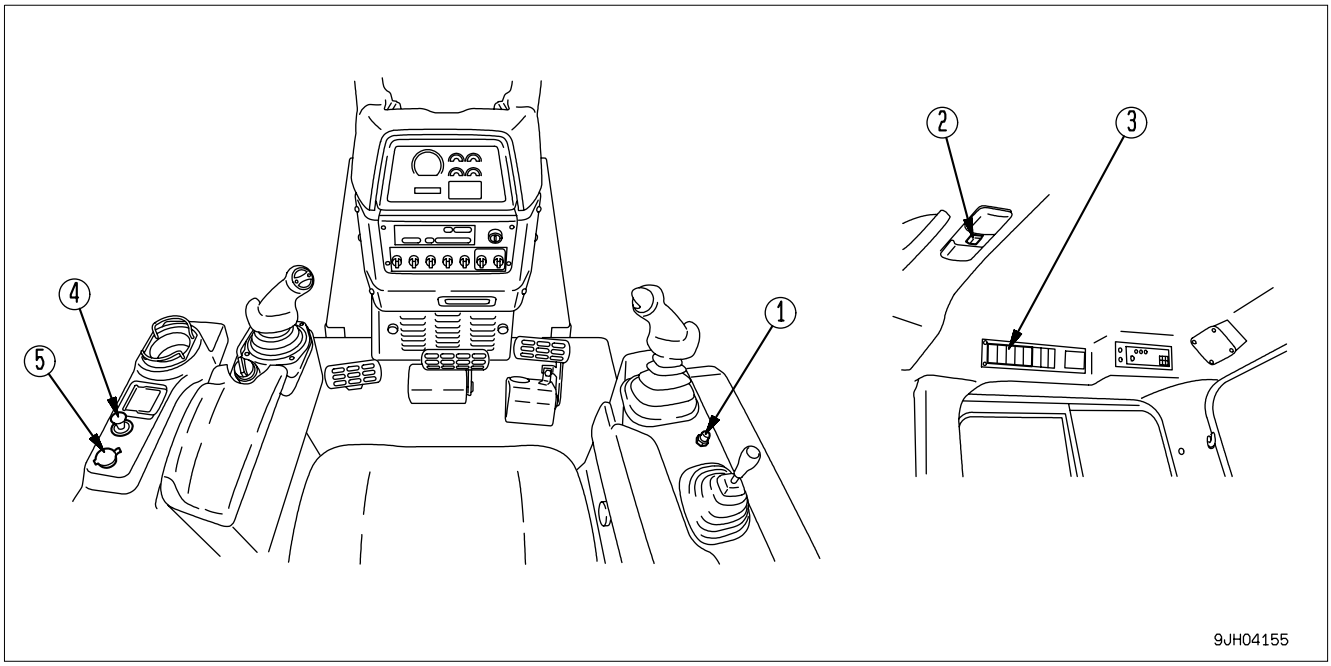

(1) Horn switch	(4) Cigarette lighter (machines equipped with cab)
(2) Room lamp switch	(5) Accessory socket
(3) Wiper switch	

HORN SWITCH

The horn sounds when the button (1) at the rear of the blade control lever at the right side of the operator's seat is pressed.

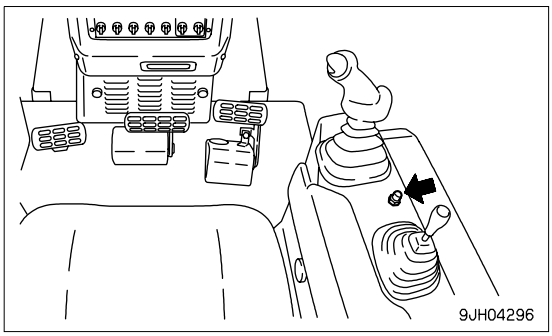

ROOM LAMP SWITCH

This (2) lights up the room lamp.
ON position: Lamp lights up
OFF position: Lamp is out

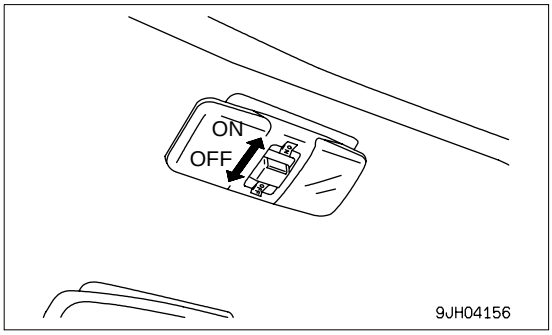

https://truckmanualshub.com/

WIPER SWITCH

This (3) activates the wipers.
The wiper switches are as follows.
(LH) Left door
(FF) Front window
(RH) Right door
(RR) Rear window
(INT) Wiper intermittent operation switch
This is also used as the window washer switch.
The switch is operated as follows.

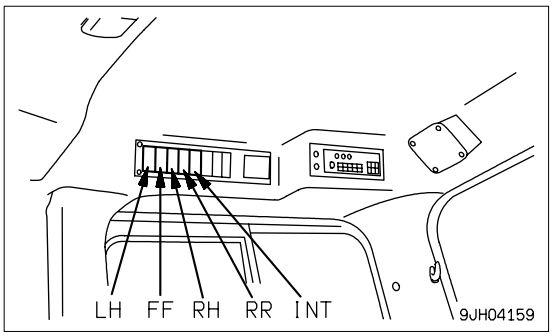

- Wiper only
  If this is switched on, the wiper will start.

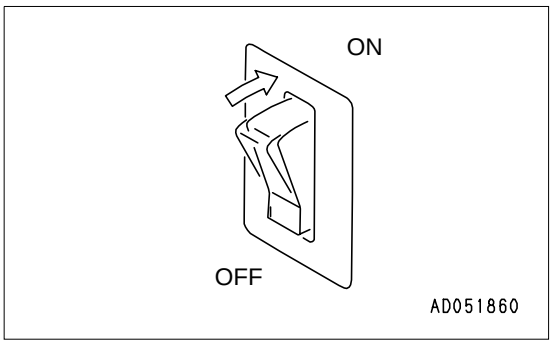

- Wiper and window washer
  If this is kept pressed to the ON position while the wiper is working, water will be sprayed out.

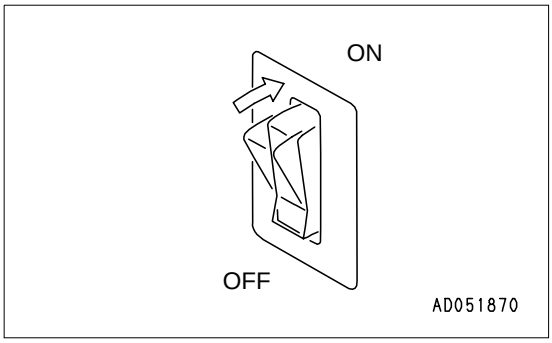

REMARK
When installing the cab, check the colors of the washer tank and window washer hoses, and be sure to connect correctly.

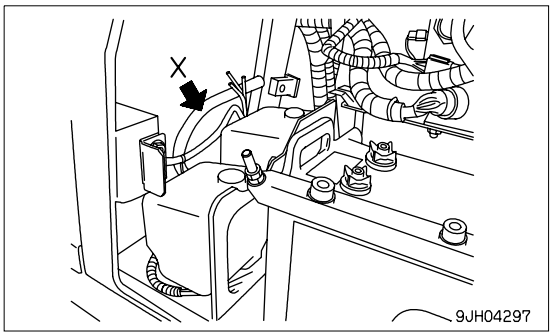

A	Left door (blue)
B	Front window (no color)
C	Right door (red)
D	Rear window (black)

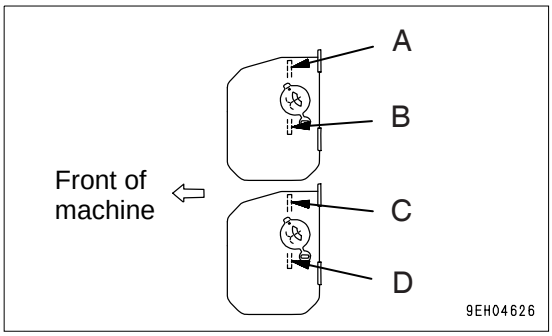

https://truckmanualshub.com/

A	Red - Right door
B	Blue - Left door
C	Black - Rear window
D	Colorless - Front window
E	Washer tube
F	From fuse box red (back up power souce)

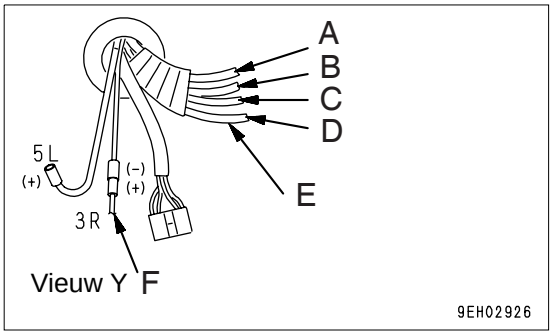

CIGARETTE LIGHTER

This (4) is used to light cigarettes.
When the cigarette lighter is pushed in, it will return to its original position after a few seconds, so take it out to light your cigarette.
Cigarette lighter capacity: 120W

NOTICE
This cigarette lighter is 24V. Do not use it as the power source for 12V equipment.

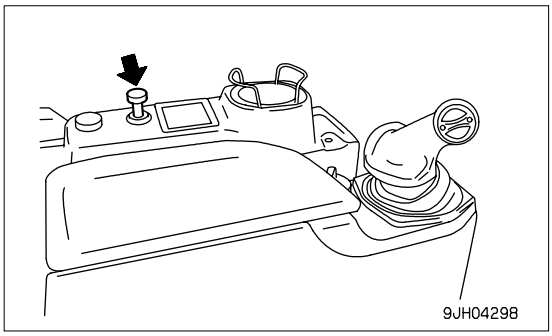

ACCESSORY SOCKET

This (5) is used as the power source for a wireless or other 12V equipment.

Accessory socket capacity: 60W (12V x 5A)

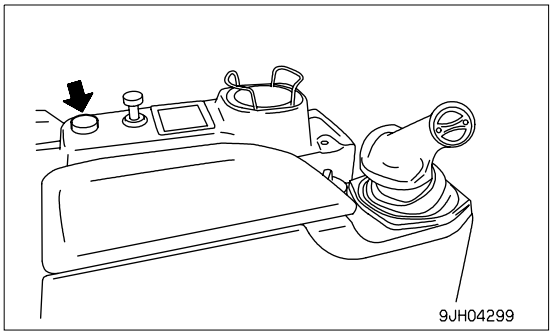

https://truckmanualshub.com/

CONTROL LEVERS, PEDALS

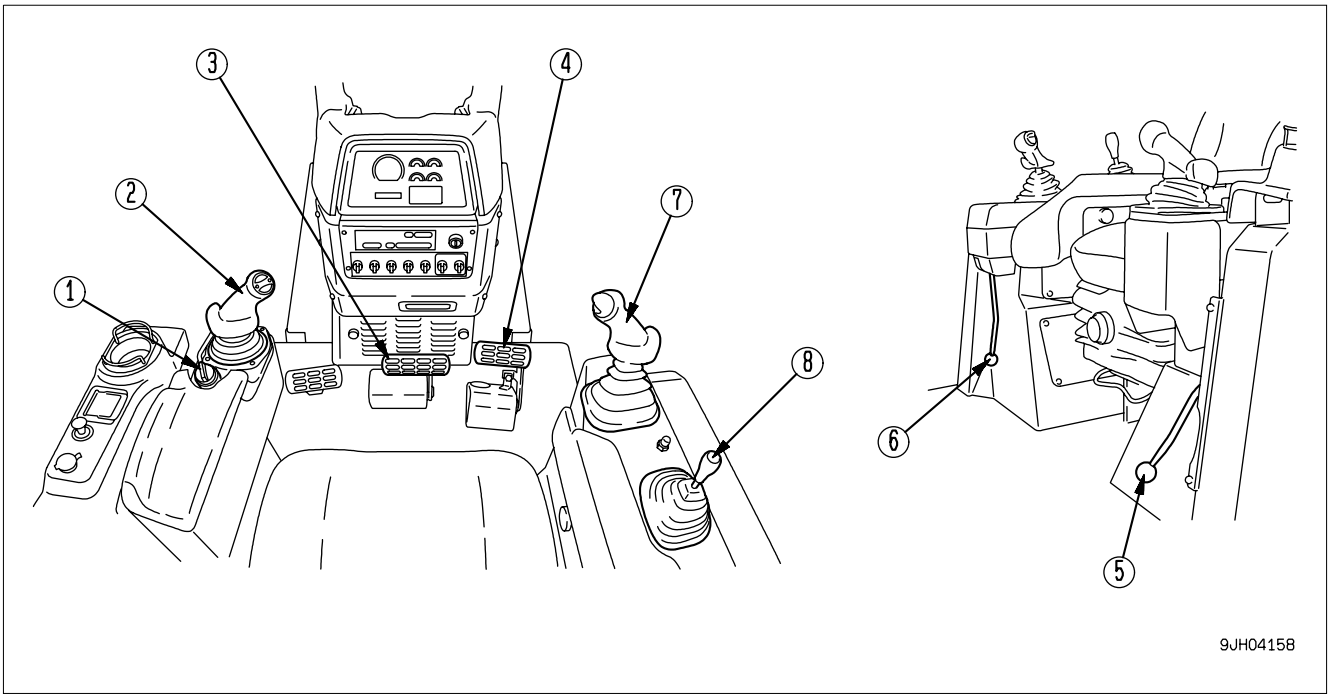

(1) Fuel control dial	(5) Parking lever
(2) Joystick (steering, directional and gear shift lever)	(6) Safety lever
(3) Brake pedal	(7) Blade control lever
(4) Deceleration pedal	(8) Ripper control lever

FUEL CONTROL DIAL

This dial (1) is used to control the engine speed and output.
(a) Low idling position: Turn fully to the left
(b) High idling position: Turn fully to the right

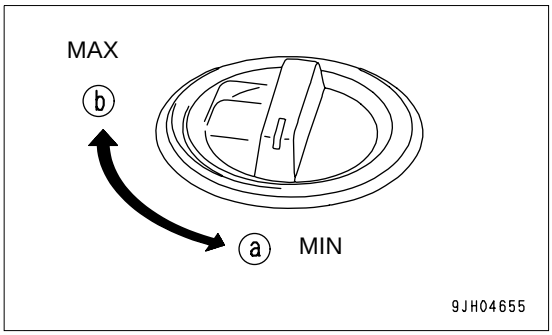

REMARK
When stopping the engine, set the starting switch to the OFF position.

https://truckmanualshub.com/

JOYSTICK (STEERING, DIRECTIONAL AND GEAR SHIFT LEVER)

(PCCS lever)

This lever (2) is used to switch between forward and reverse to steer and gear shift the machine or carry out counter rotation turns.

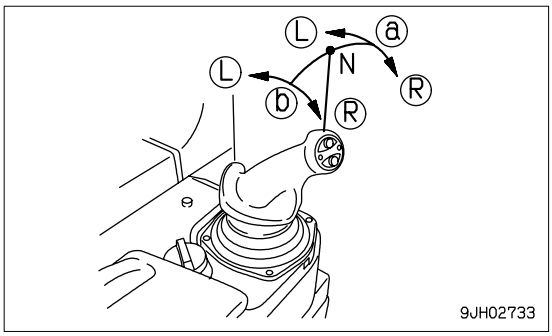

REMARK

PCCS: Palm command control system

- **Forward-reverse shifting**

Position (a): FORWARD

Position (b): REVERSE

Position N: Neutral

Operate to the front to drive forward; operate to the rear to drive in reverse.

- **Steering**

(L) Left turn

(R) Right turn

With the lever operated to the front or rear, operate the lever partially to the left or right to turn the machine. The machine will turn gradually in the same direction as the lever is operated.

If the lever is operated fully to the left or right, the machine will turn in a small radius.

REMARK

- **If the lever is released when steering the machine, the lever will return to the (a) position or the (b) position and the machine will be returned to straight movement.**

- **Gear shifting**

When the steering, directional, and gearshift lever is at the FORWARD or REVERSE position and switch (c) or switch (d) is pushed, the transmission speed will change.

UP switch (c): Each time the switch is pressed, the transmission will shift up one speed.

DOWN switch (d): Each time the switch is pressed, the transmission will shift down one speed.

For details of the maximum speed in each speed range, see “SPECIFICATIONS (5-2)“.

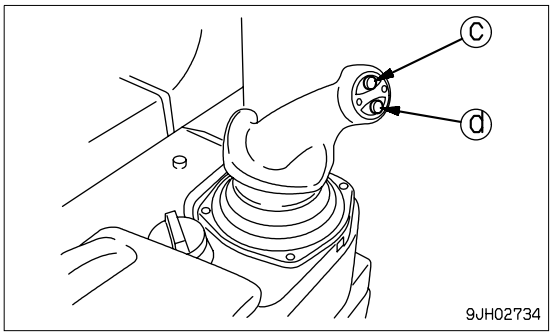

REMARK

- **The speed range being used is displayed on the monitor panel according to the gearshift operation.**

<Example>

Neutral: N is displayed on the display panel.

FORWARD 2nd: F2 is displayed on the display panel.

REVERSE 3rd: R3 is displayed on the display panel.

- **When the parking lever is locked, P is displayed.**
- **For details of the method of shifting gear according to the shift mode, see the “SHIFTING GEAR (3-82)“. Shift mode selection means that the selected speed range is displayed at the N position before starting.**

https://truckmanualshub.com/

- **Operating counterrotation turn**

⚠ WARNING

When operating the counterrotation turn, if the load on the left and right is not balanced, the machine may make a pivot turn, so check the ground conditions and be careful not to hit any obstacles when carrying out the operation.

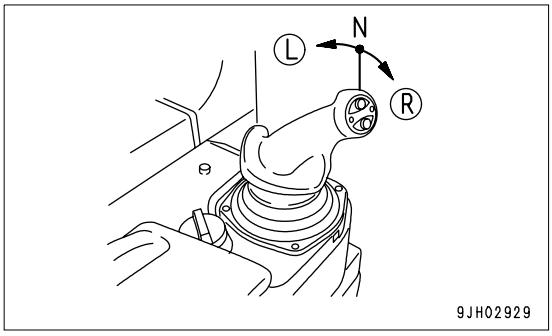

With the lever at the N position, operate the lever partially in the direction of turn. The left and right tracks will rotate in opposite directions, and the machine will make a slow counter-rotation turn. If the lever is operated further, the speed of the counterrotation turn will increase.
(R): Right counterrotation turn
(L): Left counterrotation turn

BRAKE PEDAL

⚠ WARNING

Do not place your foot on this pedal unnecessarily.

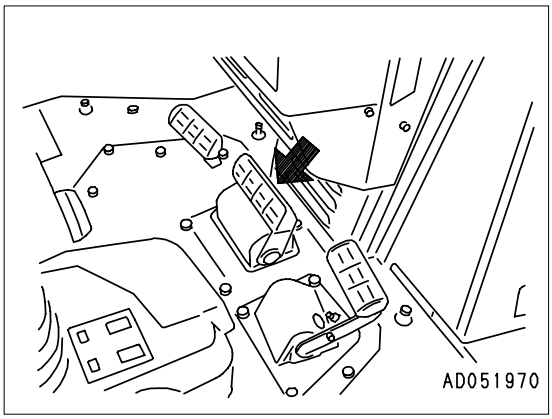

Depress the pedal (3) to apply the right and left brakes.

DECELERATION PEDAL

⚠ WARNING

- **Do not place your foot on this pedal unnecessarily.**
- **When passing over the top of a hill or when a load is dumped over a cliff, the load is suddenly reduced, so there is danger that the travel speed will also increase suddenly. To prevent this, depress the decelerator pedal to reduce the travel speed.**

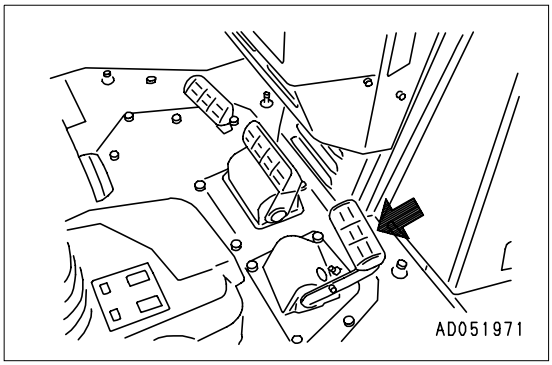

This pedal (4) is used when reducing the engine speed or stopping the machine.
When switching between forward and reverse, or when stopping the machine, use this pedal to reduce speed.

https://truckmanualshub.com/

PARKING LEVER

WARNING

When the machine is parked, always set the parking lever to the LOCK position.

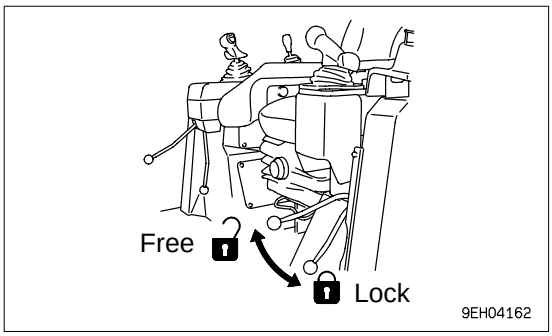

This lever (5) is used to apply the parking brake.

REMARK

- **When operating the parking lever to the LOCK position, return the steering, directional, and gearshift lever to the N position first.**
- **When starting the engine, if the parking lever is not at the LOCK position, the limit switch is actuated and it is impossible to start the engine.**

SAFETY LOCK LEVER

WARNING

- **When standing up from the operator's seat, always set the safety lever securely to the LOCK position.**
- **If the blade control and ripper control levers are not locked and are touched by accident, it may lead to serious injury or damage.**
- **If the safety lever is not set securely to the LOCK position, the lock may not be applied.**
- **Check that it is in the position shown in the diagram.**
- **When parking the machine or when carrying out maintenance, always lower the blade and ripper to the ground, then set the safety lever to the LOCK position.**

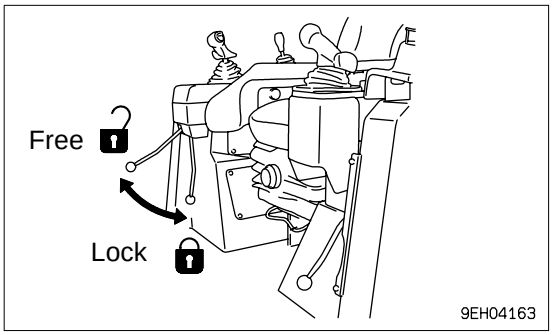

This safety lever (6) is a device to lock the blade control and ripper control levers.
When it is set to the LOCK position, the TILT, RAISE, LOWER, and FLOAT operations are locked.

REMARK
When starting the engine, to ensure safety, always set the safety lever to the LOCK position.

BLADE CONTROL LEVER

This lever (7) is used to raise the blade.
Single tiltdozer

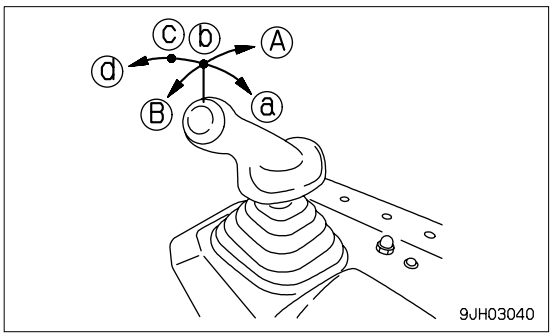

https://truckmanualshub.com/

This lever is used to raise or tilt the blade.

- Lifting control

(a) RAISE:
(b) HOLD:
Blade is stopped and held in this position.
(c) LOWER:
(d) FLOAT:
Blade will move freely according to external force.

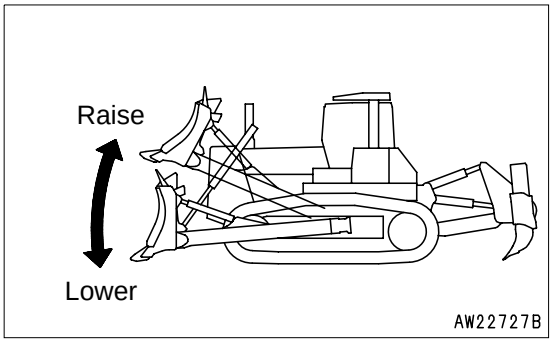

REMARK
When released form FLOAT position, this lever will not return to HOLD position, so it must be moved back by hand.

- TILT OPERATION

(A) RIGHT TILT
(B) LEFT TILT

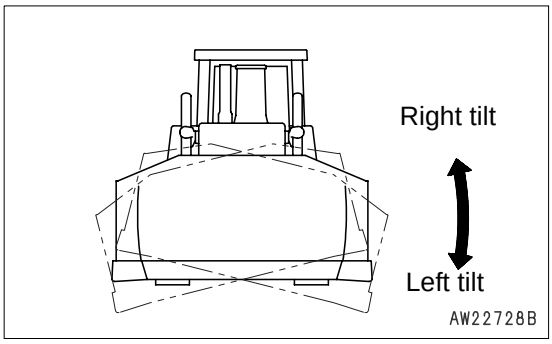

RIPPER CONTROL LEVER

This lever (8) is used to operate the ripper.
(a) RAISE
(b) HOLD: Ripper is stopped and held in the same position.
(c) LOWER

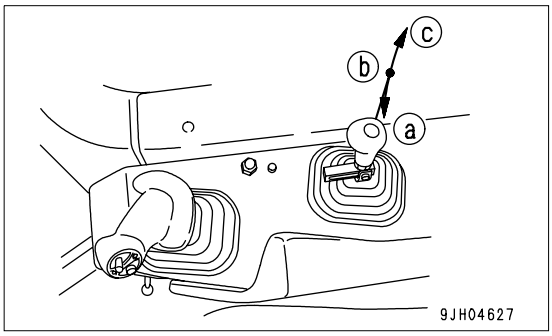

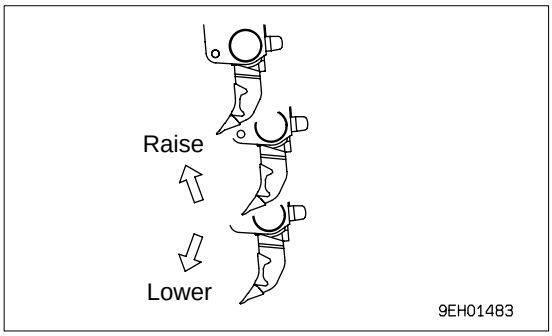

https://truckmanualshub.com/

DUST INDICATOR

This is on the air cleaner bracket inside the engine room.
This device indicates that the air cleaner element is clogged.
For details on how to clean the element, see “CHECK, CLEAN AND REPLACE AIR CLEANER ELEMENT (4-21)“.

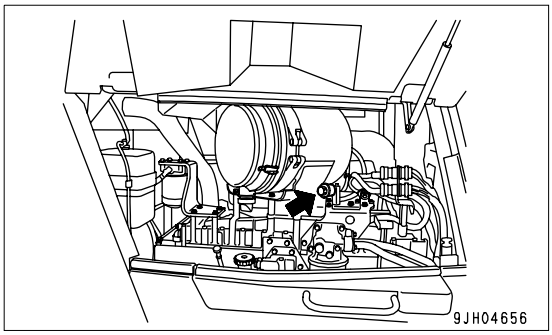

https://truckmanualshub.com/

FUSE BOX

NOTICE
Before replacing a fuse, be sure to turn off the starting switch.

The fuses protect the electrical equipment and wiring from burning out.
If the fuse becomes corroded, or white powder can be seen, or the fuse is loose in the fuse holder, replace the fuse.
Replace a fuse with another of the same capacity.
Fuse boxes is installed under the battery cover.
Circuit breaker is installed the recirculated air filter cover.
(1) Fuse box FS1
(2) Fuse box FS2

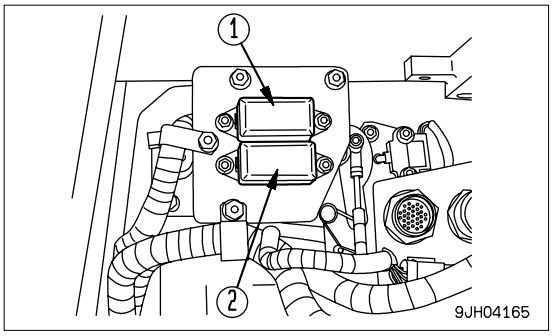

(3) Circuit breaker

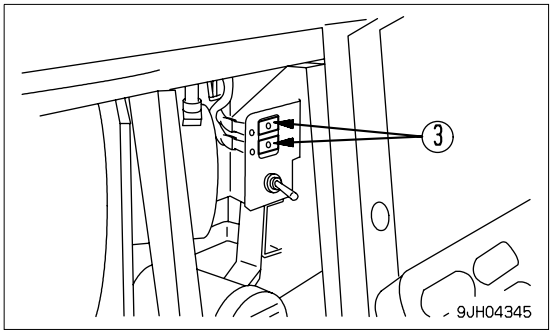

- Cab (machines equipped with cab)

Fuse box is installed at the bottom of the overhead panel.

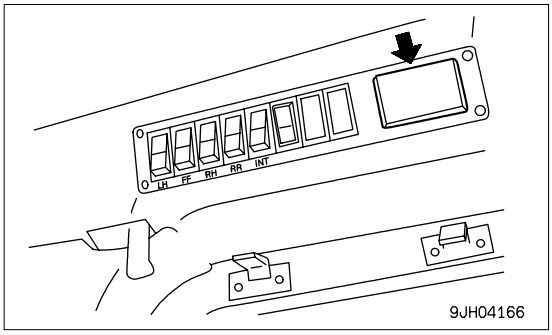

https://truckmanualshub.com/

CIRCUIT BREAKER

- If the starting switch does not work even when the starting switch is turned to the ON position, open the recirculated air filter cover.
- If excessive current flows through the circuit breaker, it cuts off the electric circuit to prevent damage to the electrical components and wiring.
- To restore the electric circuit after it has been cut off, push in reset button (3). (This springs out when the circuit is cut off.)
  If the electric circuit is normal, reset button (3) will stay pushed in. If it comes out immediately when it is pushed in, the electric circuit must be checked.

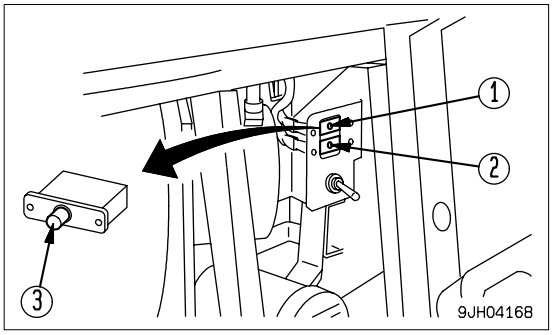

No	Fuse capacity	Circuit
(1)	20A	Starting switch
(2)	20A	Air conditioner

REMARK
The circuit breaker is a device installed in electric circuits where a large current flows. It is installed to protect the electric circuit. It protects the electric components and wiring from damage caused by an abnormal current in the same way as a normal fuse. After repairing and restoring the location of the abnormality, there is no need to replace the breaker. It can be used again.

FUSE CAPACITY AND NAME OF CIRCUIT

FUSE BOX I

(1) Fuse box fs1

No.	Fuse capacity	Circuit
1	30A	Additional heater, Spere power source
2	20A	Horn, Intake air heater
3	20A	Head lamp
4	20A	Rear lamp
5	20A	Transmission Steering controller

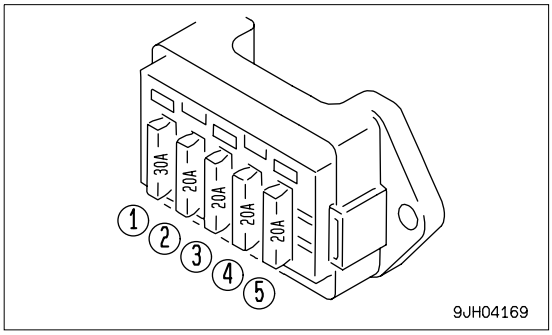

(2) Fuse box fs2

No.	Fuse capacity	Circuit
(1)	15A	Monitor panel
(2)	20A	Fuel pump
(3)	30A	Air conditioner
(4)	20A	Backup alarm
(5)	30A	Battery power source (direct from battery)

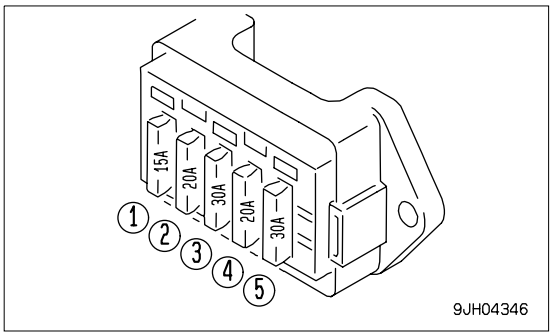

https://truckmanualshub.com/

FUSE BOX II

No.	Fuse capacity	Circuit
(1)	10A	Radio memory
(2)	20A	Radio, lamp, cigarette lighter
(3)	20A	Rear heating wire glass (If equipped)
(4)	10A	Rear wiper
(5)	10A	Front wiper
(6)	10A	Left and right door wiper

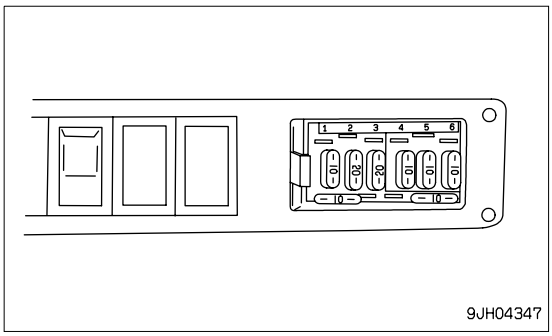

FUSIBLE LINK

If the starting motor does not work even when the starting switch is turned to the ON position, there may be a disconnection in fusible links (2) and (3) on top of the wiring, so remove the cover (1) at the side of the battery box cover on the left side of the machine and check or replace.

Capacity of (2): 32 A
Capacity of (3): 96 A

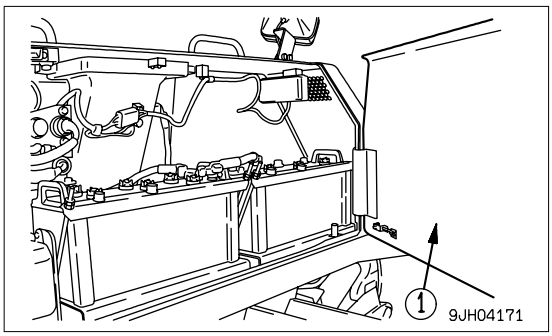

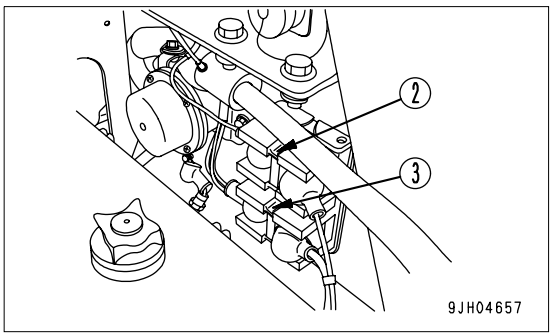

REMARK

A fusible link refers to the large-sized fuse wiring installed in the high current flow portion of the circuit to protect electrical components and wiring from burning, similarly to an ordinary fuse.

https://truckmanualshub.com/

DOOR OPEN LOCK

Use this when your want to keep the door held open.

1. Push the door against door catch (1). The door will be held by the door catch.

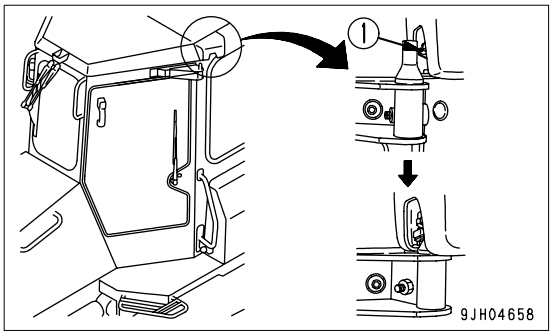

2. To release the door, move lever (2) inside the cab to the front of the cab. This will release the catch.

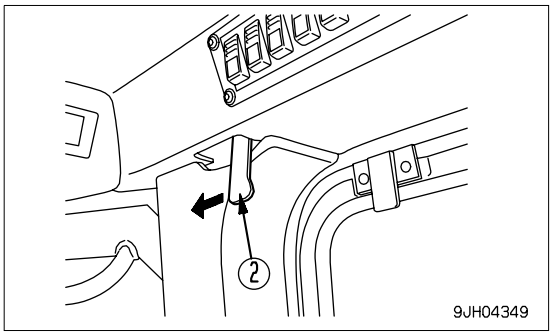

NOTICE

- **When keeping the door open, fix it securely to the catch.**
- **Always close the door when traveling or carrying out operations. Leaving the door open will cause the door to break.**
- **Keep the door locked open securely. The door may swing closed because of the vibration.**

SASH GLASS INTERMEDIATE LOCK

When working with the cab sash glass open, use this lock to prevent the glass from chattering.

- When the lever is at the FREE position, the glass can be opened or closed.
- When the lever is moved to the LOCK (up or down) position, the glass is fixed in position.

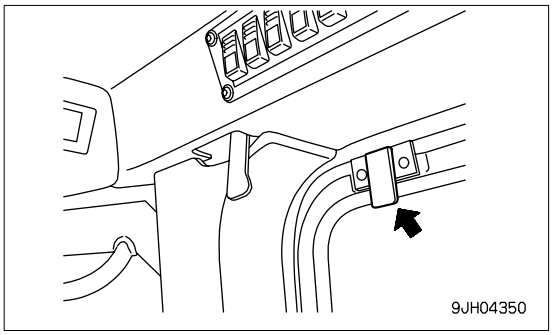

NOTICE

Always close the window when traveling or carrying out operations. Leaving the window open will cause the window to break.

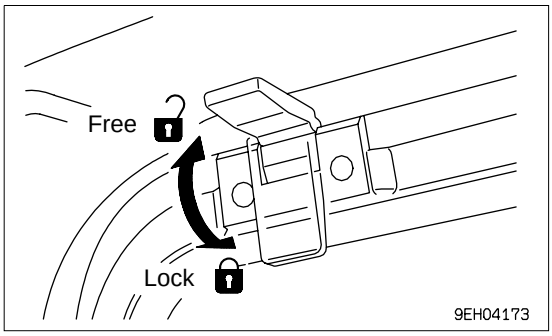

https://truckmanualshub.com/

DOOR POCKET

This is inside the left and right doors. Use it for keeping things.
Do not put the heavy tools or other heavy objects in it.
If the pocket is dirty, loosen three bolts (1), then remove the pocket and rinse it.

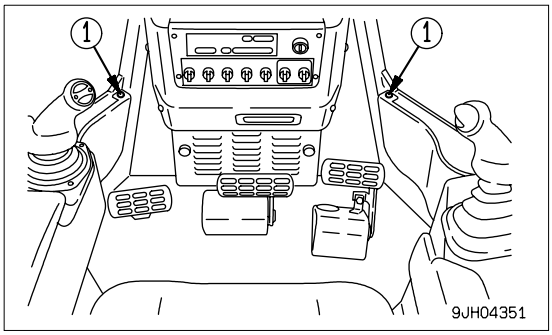

ASHTRAY

This is on the left side of the operator's seat.
Always make sure that you extinguish the cigarette before closing the lid.

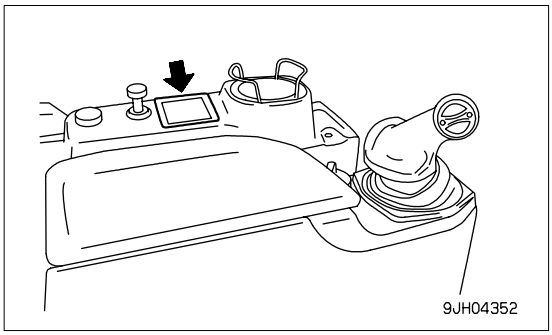

https://truckmanualshub.com/

CAR STEREO, HANDLING

EXPLANATION OF COMPONENTS

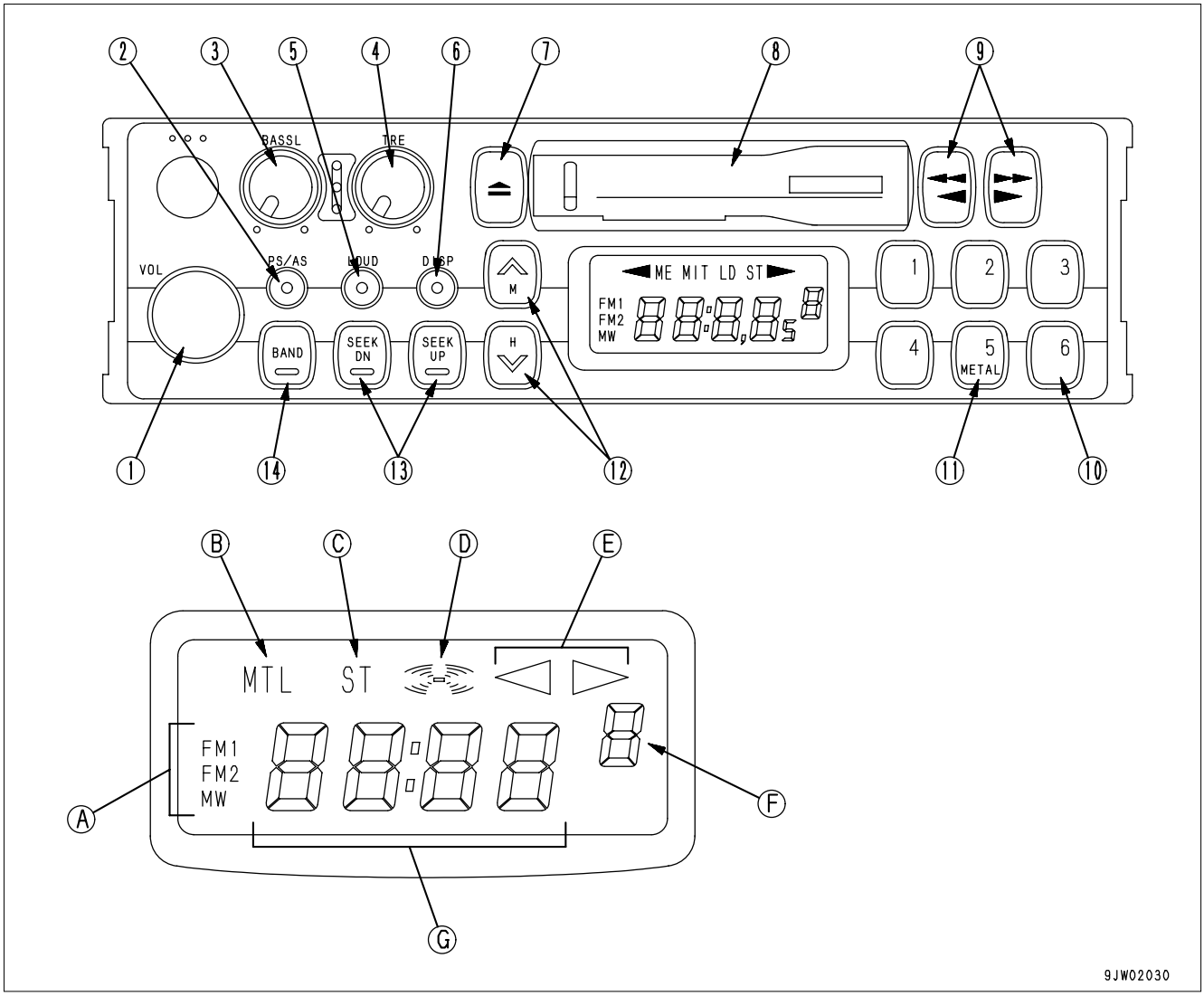

(1) Power switch/volume	(8) Cassette door
(2) Auto-store/preset scan button	(9) Fast forward, rewind buttons
(3) Bass control knob	(10) Preset buttons
(4) Treble control knob	(11) Metal tape button
(5) Loudness button	(12) Manual tuning buttons
(6) Time/radio display selector button	(13) Seek tuning buttons
(7) Tape eject button	(14) Band selector button

(A) Band display	(E) Tape direction display
(B) Metal tape display	(F) Preset channel display
(C) FM stereo reception display	(G) Time/frequency display
(D) Loudness display	

https://truckmanualshub.com/

POWER SWITCH/VOLUME

Turn this knob (1) to the right until it clicks to turn the power on. Turn it further to increase the volume.

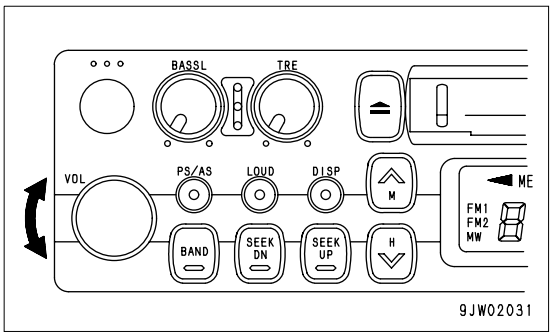

AUTO-STORE/PRESET SCAN BUTTON

Use this button (2) to actuate the preset scan and auto-store functions.

- Auto-store
  Each time this button is pressed for more than 2 seconds while in radio reception, this auto-store function automatically starts to search for the desired station within a receivable band, and memorize the frequency in the preset memory. During this scanning process, the frequency shown in the right side of display continues to change. This indicates that each frequency is memorized in the auto-store.

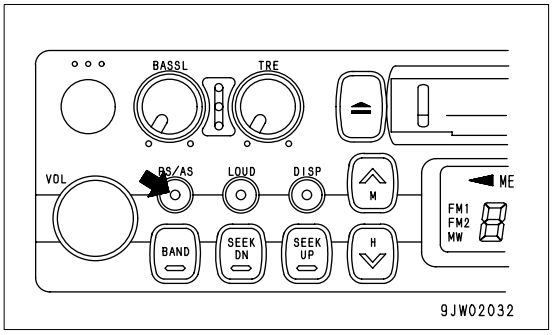

REMARK

The auto-store function cannot be used when the channel display is flashing.

When the display is flashing, the preset scan function is being used.

BASS CONTROL KNOB

Turn this button (3) to the left to reduce the low tones ; turn it to the right to emphasize the low tones.

Direction (a) : Low tone reduced

Direction (b) : Low tone emphasized

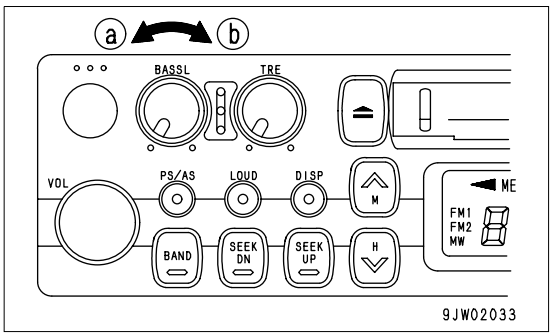

TREBLE CONTROL KNOB

Turn this button (4) to the left to reduce the low tones; turn it to the right to emphasize the high tones.

Direction (a): High tone reduced

Direction (b): High tone emphasized

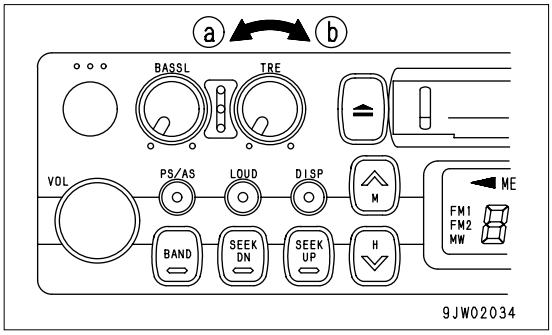

https://truckmanualshub.com/

LOUDNESS BUTTON

This button (5) is used when playing at low volume. It makes it possible to hear more easily by emphasizing the low tone when the low tones are weak.
Push button : Actuated (ON)
Push button again : Canceled (OFF)

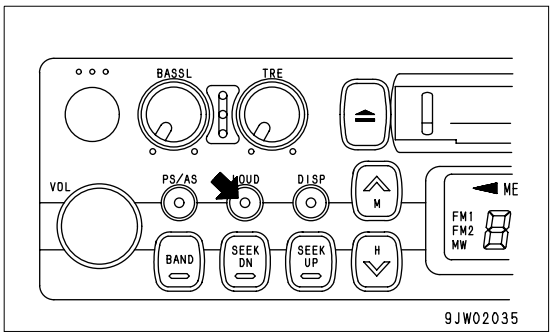

TIME/RADIO DISPLAY SELECTOR BUTTON

This button (6) is used to switch between the “Radio/tape display“ and the “Time display“.

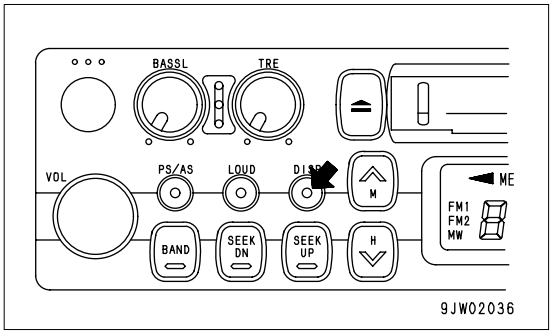

- Correcting time
  Press the button to set to the time display.

(A) Correcting hour :
Keep the DISP button pressed and press the bottom tuning button (H) to correct the hour.

(B) Correcting minute :
Keep the DISP button pressed and press the top tuning button (M) to correct the minute.

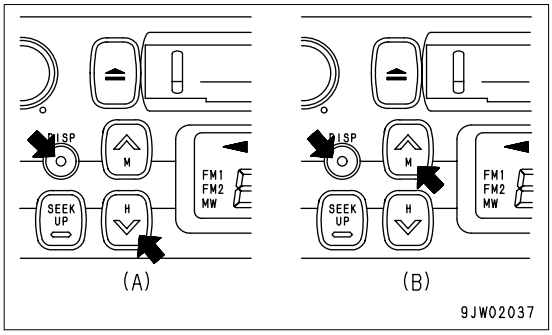

TAPE EJECT BUTTON

This button (7) is used to stop the tape and to eject the cassette.
When this button is pressed, the tape is ejected and the radio plays.

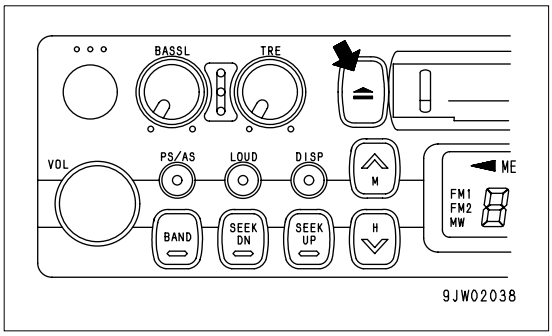

https://truckmanualshub.com/

CASSETTE DOOR

Set the cassette with the exposed portion of the tape on the right side and insert it in cassette door (8).

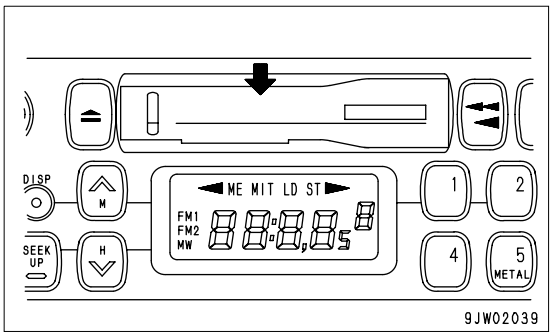

FAST FORWARD, REWIND BUTTONS

These buttons (9) are used to fast forward or rewind the tape.

- Fast forward/rewind
  If you press the button pointing in the same direction as the arrow indicating the direction of play, the tape will be fast forwarded; if you press the button pointing in the opposite direction, the tape will be rewound.
  To stop the tape, lightly press the button that is not locked. The fast forward or rewind operation will be canceled.

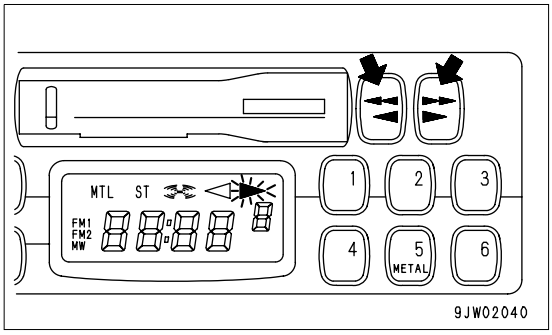

PRESET BUTTONS

These buttons (10) are used to call up the broadcast station frequencies preset in memory for each of buttons No.1 to No.6. It is possible to preset 18 stations (FM:12; AM:6) with these buttons.

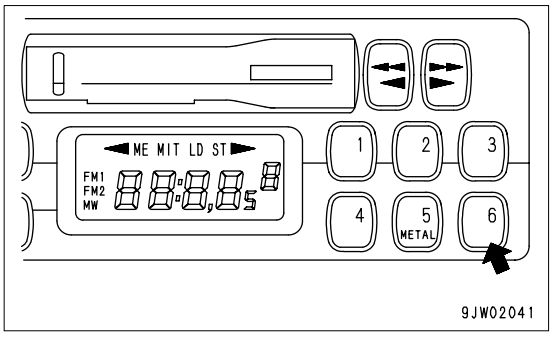

METAL TAPE BUTTON

(used also for preset button No.5)

This button (11) is used when playing a metal or chrome tape. This button is used also for preset button No.5. When it is pressed, “MTL“ appears on the display.

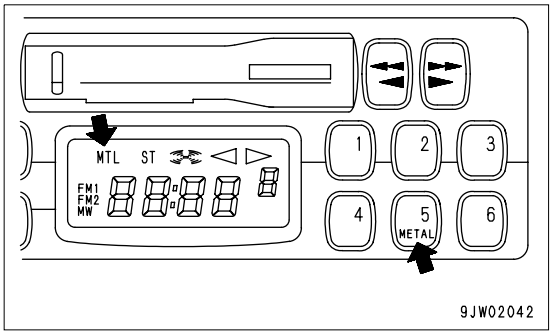

https://truckmanualshub.com/

MANUAL TUNING BUTTONS

These buttons (12) are used for manual tuning.
When “TUN /\“ button is pressed, the frequency goes up 9 kHz for AM or 0.1 MHz for FM; when “TUN \/“ button is pressed, the frequency goes down 9 kHz for AM or 0.1 MHz for FM.
If the button is pressed down and held, the frequency will change continuously.

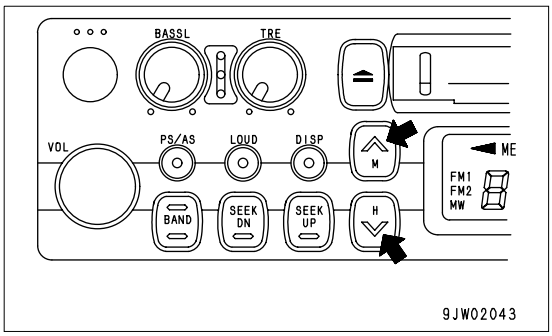

SEEK TUNING BUTTONS

These buttons (13) are used to seek tuning.
When the “SEEK UP“ button is pressed, the frequency automatically goes up; when the “SEEK DOWN“ button is pressed, the frequency automatically goes down.
When the next station that can be received is found, it automatically stops.

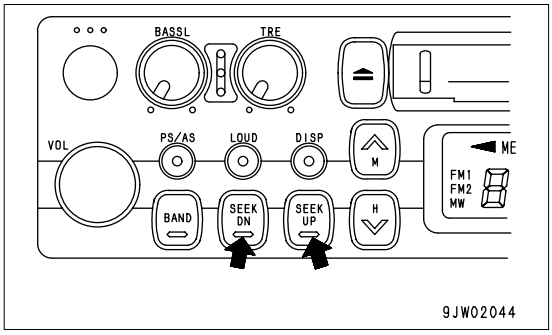

BAND SELECTOR BUTTON

When this button (14) is pressed, the band is switched between FM1, FM2, and MW (AM). The band is shown on the display.

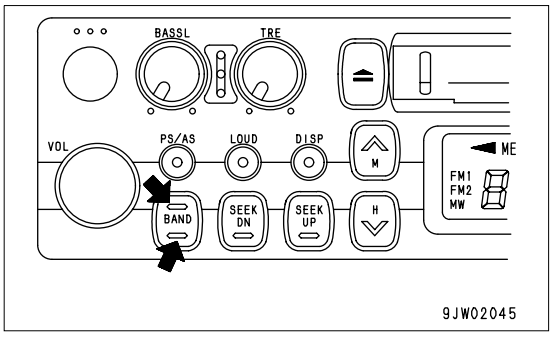

https://truckmanualshub.com/

METHOD OF OPERATION

METHOD OF SETTING PRESET BUTTONS

To listen to a preset station, use band selector button (1) to select AM, FM1, or FM2, then press the preset switch number to listen to the desired station.
It is possible to preset six AM stations and 12 FM stations (FM1: 6, FM2: 6).

1. If you are playing a cassette, press the tape eject button to stop the tape.
2. Select the station to be preset.
   Use band selector button (1) to select MW (AM), FM1, or FM2, then use the manual tuning button to select the frequency of the broadcasting station.
3. Press manual memory button (2) or seek tuning button (3).
4. Press preset button (4) of the number to be preset for 2 seconds while the frequency display is being shown on the display. (The preset channel and frequency are displayed and the presetting is completed).
5. Repeat Steps 2 to 4 to preset other stations.

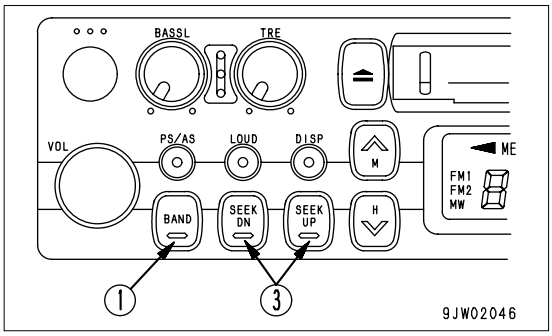

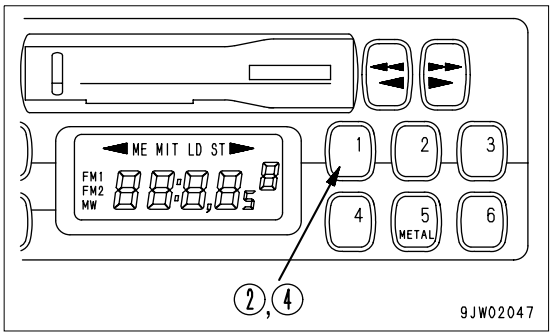

REMARK

- **Use Steps 2 to 4 also when changing the setting of a preset switch to another station.**
- **When the power is disconnected, such as when the battery is replaced, all the settings are deleted, so preset the stations again.**

MANUAL MEMORY BUTTON

Select the station to be preset with manual tuning button (1) or seek tuning button (2), then keep button No.1 to button No.6 of button (3) pressed for 2 seconds while the frequency is being displayed to preset the station.

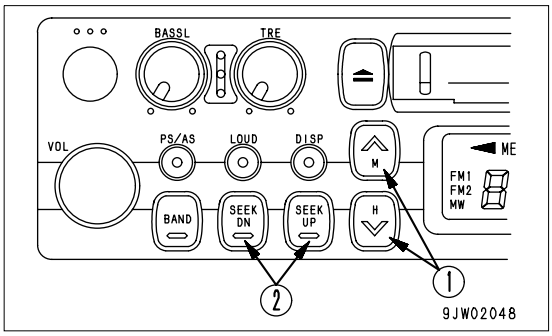

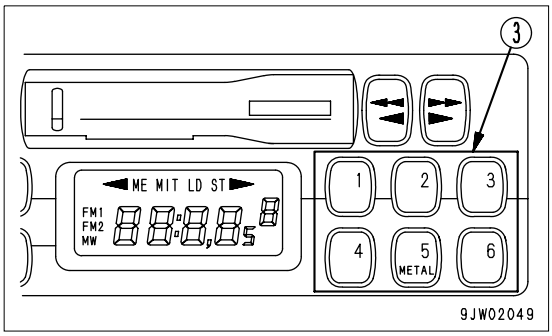

https://truckmanualshub.com/

LISTENING TO RADIO

1. Turn the starting switch ON, then turn power switch (1) ON.
2. Set band selector button (2) to AM or FM.
3. Select the station with the preset buttons or manual tuning button (3).
4. Adjust the volume, balance, and tone as desired.
5. When turning the radio OFF, turn power switch (1) to the left until there is a click.

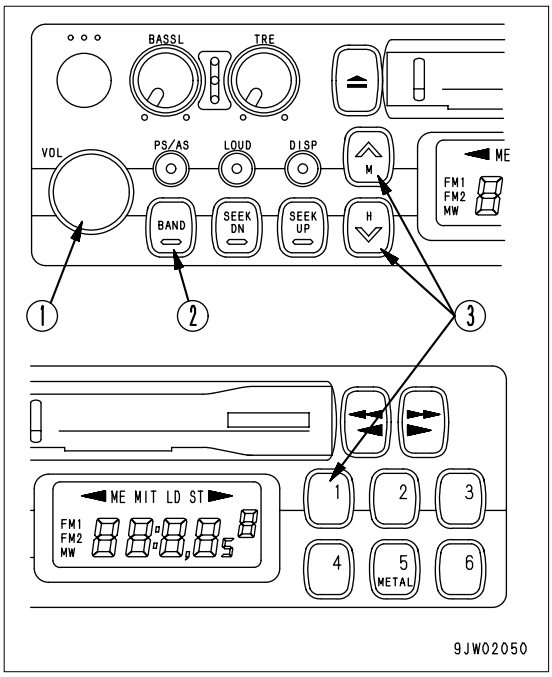

REMARK

- **To switch to the radio when listening to a cassette, press the cassette eject button to stop the tape.**
- **If you insert a cassette when listening to the radio, the tape will start to play.**

LISTENING TO CASSETE TAPE

1. Turn the starting switch ON, then turn power switch (1) ON.
2. Set the cassette with the exposed portion of the tape on the right side and push it into the cassette door. The tape will automatically start playing.
   If the arrow indicating the direction of play is pointing to the right, the top side is being played; if the arrow is pointing to the left, the bottom side is being played.
   When the tape reaches the end, it is automatically reversed and the other side starts to play.
3. When finishing with the tape, press the cassette eject button to eject the tape and automatically switch to the radio.

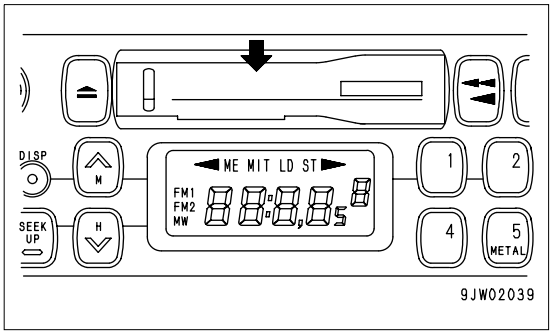

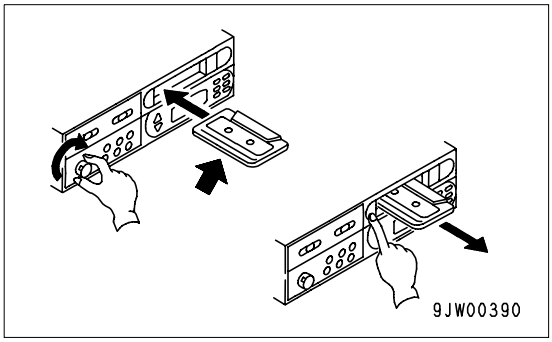

https://truckmanualshub.com/

REVERSING TAPE

When listening to the tape, press both FAST FORWARD, REWIND buttons (A) and (B) at the same time lightly.
When this is done, the tape direction display will be reversed.

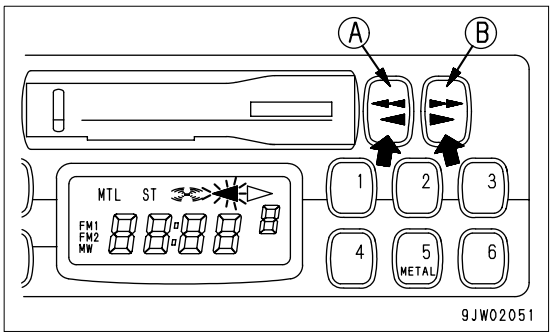

PRECAUTION WHEN USING

WARNING

- **If a voltage greater than the specified voltage is input, it may cause fire, electrocution, or other failure. Never input any voltage other than the specified voltage.**
- **Places inside the radio are under high voltage. Do not remove the cover.**
- **Do not carry out any modification. This may cause fire, electrocution, or other failure.**
- **If the sound cannot be heard, no display is given, or any other abnormality occurs, turn off the power switch and ask your Komatsu distributor as soon as possible to carry repairs.**

- Stow the antenna when traveling in places with low overhead clearance.
- To ensure safety during operations, keep the volume at a level where it is possible to hear other machines.
- If water gets inside the speaker case or radio (auto tuning), it may cause a serious problem, take care not to let water get in these items.
- Do not wipe the scales or buttons with benzene, thinner, or any other solvent. Wipe with a soft dry cloth. Use a cloth soaked in alcohol if the equipment is extremely dirty.

NOTICE

Handling cassette tape

- **Clean the tape head approx. once a month with a commercially available head cleaning tape.**
- **Do not leave the tape any place where it is exposed to direct sunlight, any place that is excessively dusty, or any place where there is a magnetic field.**
- **Do not use 120-minute tapes. The tape is thin and it easily gets caught up inside the machine.**
- **If the tape is slack, it easily gets caught up inside the machine. Use a pencil to wind in the tape to remove any slack.**
- **Do not use any cassette tape if the label has started to come off. It may cause defective rotation, or it may be impossible to get the tape out of the machine.**

https://truckmanualshub.com/

AIR CONDITIONER

GENERAL LOCATIONS AND FUNCTION OF CONTROL PANEL

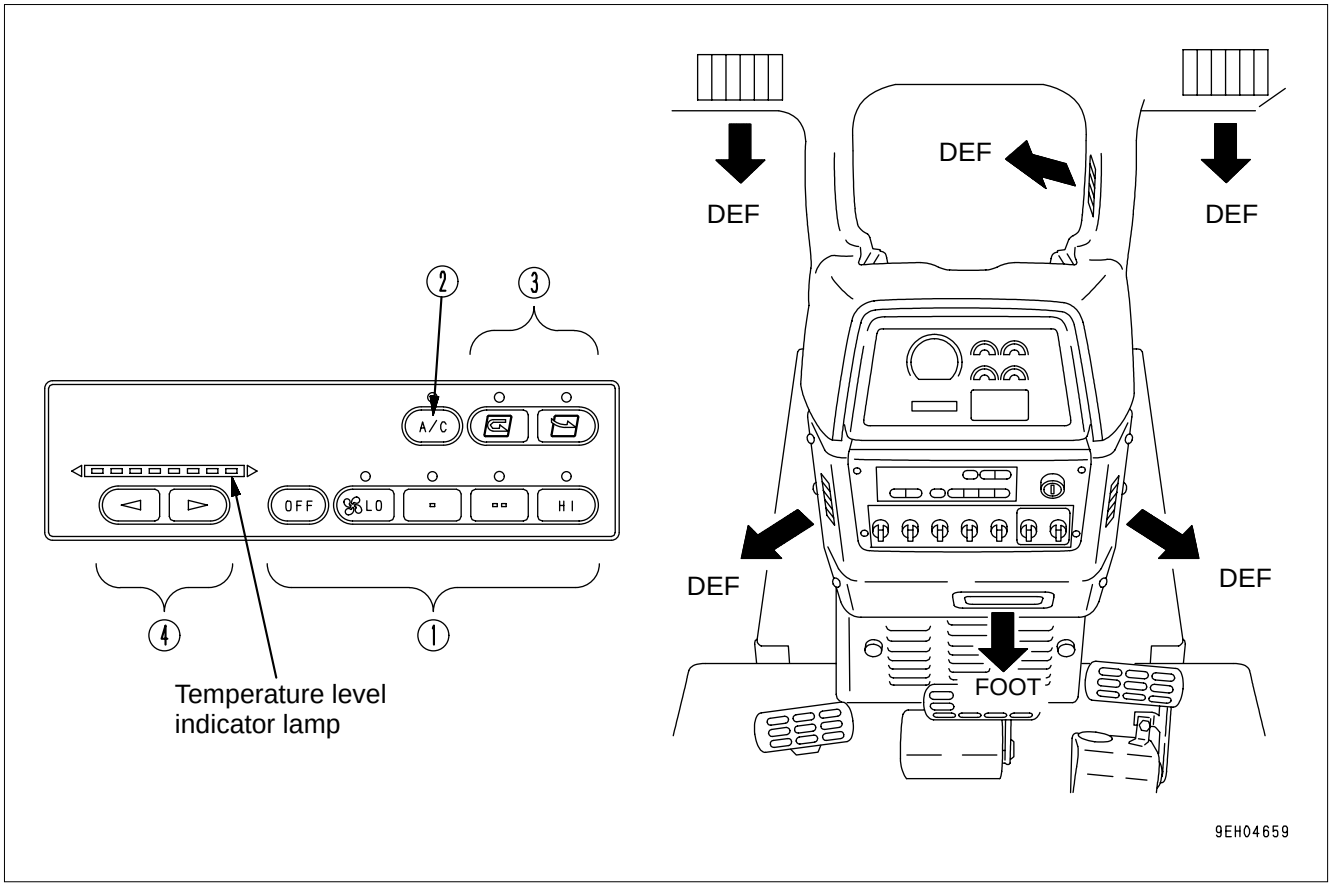

(1) Fan switch	(3) Fresh/recirc selector switch
(2) Air conditioner switch	(4) Temperature control switch

FAN SWITCH

This switch (1) can be used to adjust the air flow to four stages. It also acts as the main switch for the air conditioner. When the OFF switch is pressed, the fan stops.
When the switch is pressed, the indicator lamp above the switch lights up to display the air flow.

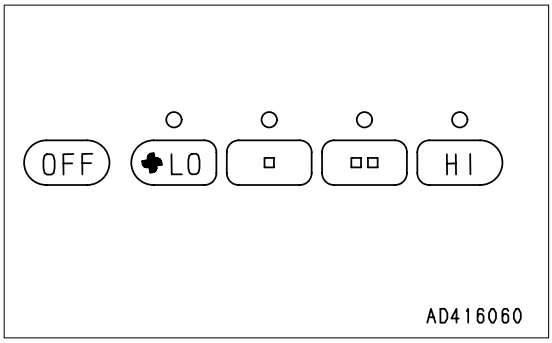

https://truckmanualshub.com/

AIR CONDITIONER SWITCH

This switch (2) is used to start or stop the cooling or dehumidifying function.
When the fan switch is turned ON and the air conditioner switch is pressed, the indicator lamp above the switch lights up. When the switch is pressed again, the switch is turned OFF and the indicator lamp goes out.

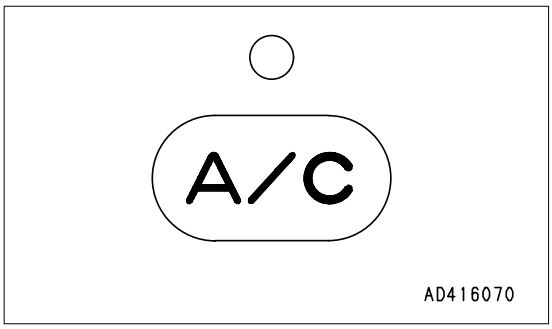

REMARK
When fresh air is taken into the cab, air pressure in the cab increases, which prevents the dust from entering. When neither heating nor cooling is needed, bring in clean fresh air to prevent the dust from coming in with your preferred air flow.

FRESH/RECIRC SELECTOR SWITCH

This switch (4) changes between internal air circulation and external air intake.
When pressing the switch, the indicator lamp on the top of switch lights up.

Internal air circulation
This switch (4) is used when wishing to quickly cool or warm the cab or when the air inside the cab is stale.

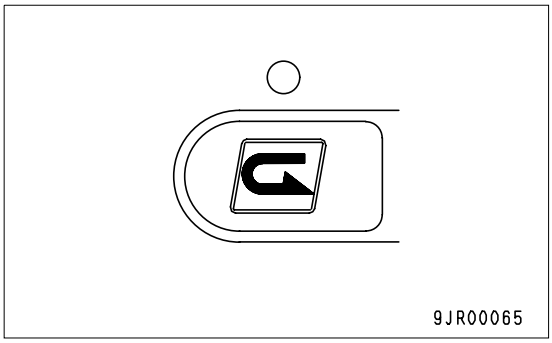

External air intake
This switch (4) is used to cool or warm the cab with the external air intake. Also, it is used for fresh air intake or to remove condensation on windows.

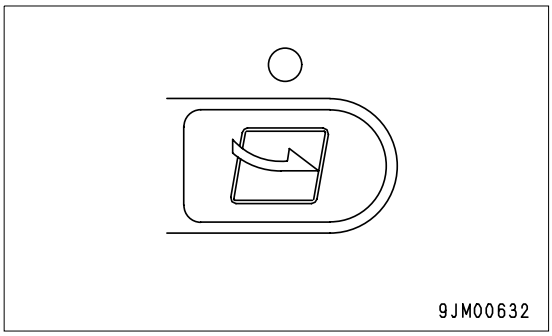

TEMPERATURE CONTROL SWITCH

The temperature can be adjusted with this switch (5) by pressing and holding the up or down button.
The temperature level indicator lamps light up to display the temperature of the air coming from the vents.
The more the blue lamps light up, the lower the temperature is.

The color of the indicator lamp changes while the switch is being pressed.
When the temperature reaches the desired level, release the switch to set the temperature.

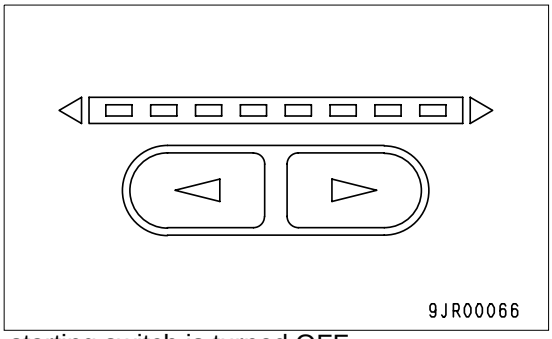

The settings for each mode are retained in memory even when the starting switch is turned OFF.
However, in the following cases, the settings must be made again.

- When the machine has been out of use for more than 7 days
- When the battery voltage is extremely low
- When there has been abnormal interference from outside

https://truckmanualshub.com/

- When the fan switch is turned OFF (the setting is not kept in memory with only the air conditioner switch)

If the air conditioner is used at the FRESH position, the inside of the cab will be pressurized and this will prevent the entry of dust.
The higher the position of the fan switch, the more effective the pressurizing becomes.

METHOD OF OPERATION

Condition of use \ Switch		Fan switch	Air conditioner switch	Temperature control switch	FRESH/RECIRC selector switch
Cooling	Rapid	HI	ON	All blue	RECIRC
	Normal	HI - LO	ON	More than half are blue	FRESH
Dehumidifying, heating		HI - LO	ON	More than half are red	FRESH
Heating	Rapid	HI	OFF	All red	RECIRC
	Normal	HI - LO	OFF	More than half are red	FRESH
Defroster		HI	ON	More than half are red	FRESH
Vetilation or pressurizing		HI - LO	OFF	All blue	FRESH

When carrying out the defrosting, if the temperature control switch is set so that all lamps are red, this will improve the performance for defrosting and demisting.

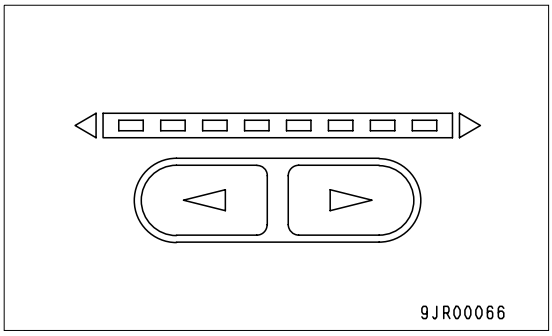

WHEN NOT USING THE AIR CONDITIONER REGULARLY

Run the air conditioner at cooling or dehumidification + heating for several minutes from time to time to prevent the loss of the oil film at various parts of the compressor.

REMARK

If the temperature inside the cab is low, the air conditioner may not work. In such cases, use the recirculated air to heat up the inside of the cab, then turn the air conditioner switch on to run the air conditioner.

https://truckmanualshub.com/

COOL BOX

When the cooling is being used, this can be used for keeping drinks and other things cool.
When the heating is being used, it can be used to keep things warm.
When not using the box, close the grill.
Do not use the cool box for things which smell or leak water or break easily.
Do not use it as a holder for tools or other small objects.

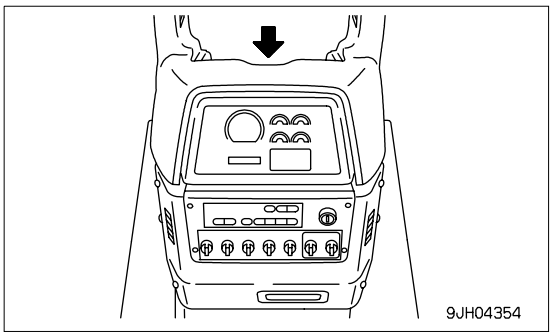

PRECAUTIONS WHEN USING

PRECAUTIONS WHEN USING THE COOLING

- If you smoke when using the air conditioner, your eyes may start to itch or burn, therefore ventilate the cab every so often to remove the smoke.
- When using the air conditioner for a long period of time, carry out ventilation process at least once every hour.

When using the air conditioner, it is recommended for health reasons, that it should only feel slightly cooler (5 or 6°C lower than the outside temperature) when you enter the cab.
Therefore, to adjust the temperature to a suitable level.

SET SO THAT COLD AIR DOES NOT DIRECTLY BLOW ONTO THE GLASS SURFACE

- If the vents (left and right) in the middle of the dashboard are turned so that cold air plays directly on the cab door glass, moisture may condense on the outside of the cab door glass and reduce the visibility. (This occurs particularly in high temperatures.)
  If this happens, close the louvers of the vent and change the direction to prevent the cold air from playing directly on the surface of the glas.

CHECKS DURING OFF-SEASON

Even during the off-season, run the compressor at low speed for several minutes once a week to prevent the loss of the oil film at the lubricated parts of the compressor. (Run the engine at low speed and set the temperature control lever at the central position.)

REMARK

When the ambient temperature is low, if the compressor is suddenly run at high speed, it may cause failure of the compressor. Note that the system is set so that the compressor will not run when the cooler switch is turned on ,if the ambient temperature is less than 2 to 6.5°C.

PROCEDURE FOR REPLACING RECEIVER

Replace the receiver once every two years.
After replacing the receiver, add compressor oil. Turn the receiver at an angle and measure the oil remaining inside the receiver, then add the same amount of oil (Denso Oil 6) to fill the receiver.

REMARK

- **The replacement interval may become shorter depending on the condition of use.**
- **If the receiver is used when the moisture absorption limit of the desiccant has been exceeded, the refrigerant circuit may become blocked and cause the compressor to break down.**

PRECAUTIONS WHEN REPLACING RECEIVER

- If the receiver is left for more than 15 minutes with the blind cover removed, the moisture in the air will be absorbed, and this will reduce the life of the desiccant. If you remove the blind cover, connect the piping quickly, evacuate the system and fill with refrigerant.
- When removing the refrigerant from the refrigerant circuit, release it gradually from the low pressure side to prevent oil from flowing out.

https://truckmanualshub.com/

CHECK COMPRESSOR BELT TENSION AND REFRIGERANT (GAS) LEVEL

If the compressor belt is loose, or the refrigerant level is low, cooling is not carried out efficiently.
For details, see “WHEN REQUIRED (4-19)“.

CLEANING AIR FILTER

If the air filter for the FRESH or RECIRC air intake becomes clogged, the cooling or heating capacity will drop.
To prevent this, clean the air filter with compressed air once a week.
For details of the cleaning method, see “WHEN REQUIRED (4-19)“.

ACCUMULATOR, HANDLING

⚠ WARNING

On machines equipped with an accumulator, for a short time after the engine is stopped, if the work equipment control lever is moved to the LOWER position, the work equipment will move down under its own weight.
After stopping the engine, always place the safety lever and parking lever in the LOCK position.
The accumulator is charged with high-pressure nitrogen gas, so mistaken operation may cause an explosion, which will lead to serious injury or damage. When handling the accumulator, always do as follows.

- **The pressure in the control circuit cannot be completely removed. When removing the hydraulic equipment, do not stand in the direction that the oil spurts out when carrying out the operation.**
- **Loosen the bolts slowly.**
- **Do not disassemble the accumulator.**
- **Do not bring it near flame or dispose of it in fire.**
- **Do not make holes in it or weld it.**
- **Do not hit it, roll it, or subject it to any impact.**
- **When disposing of the accumulator, the gas must be released. Please contact your Komatsu distributor to have this work carried out.**

The accumulator is a device to store the pressure in the control circuit, and when it is installed, the control circuit can be operated for a short time even after the engine is stopped.
Therefore, if the control lever is moved in the direction to lower the work equipment, it is possible for the work equipment to move under its own weight.
The accumulator is installed to the position shown in the diagram on the right.

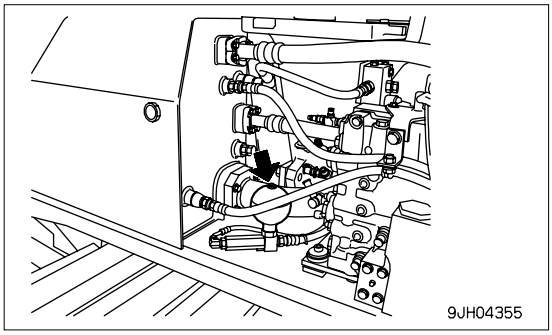

METHOD OF RELEASING PRESSURE IN OPERATING CIRCUIT ON MACHINE EQUIPPED WITH ACCUMULATOR

1. Lower the work equipment and stop the engine.
2. After stopping the engine, operate the control lever fully to the front, rear, left and right to release the pressure inside the work equipment circuit.
   However, the pressure cannot be completely removed, so when removing the work equipment circuit, loosen the screw slowly , and never stand where the oil may spray out.

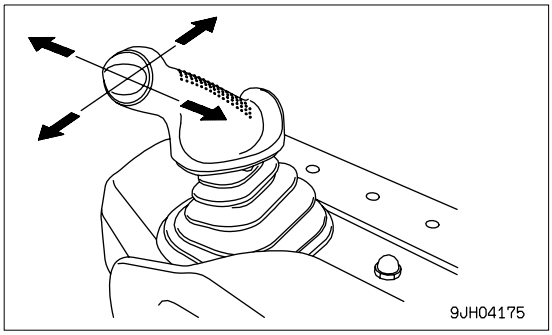

https://truckmanualshub.com/

OPERATION

CHECK BEFORE STARTING ENGINE, ADJUST

WALK-AROUND CHECK

Before starting the engine, look around the machine and under the machine to check for loose nut or bolts, or leakage of oil, fuel, or coolant, and check the condition of the work equipment and hydraulic system. Check also for loose wiring, play, and collection of dust at places which reach high temperatures.

⚠ WARNING

- **Leakage of oil or fuel, or accumulation of flammable material around high temperature parts, such as the engine muffler or turbocharger, may cause fire.**
- **Check carefully, and if any abnormality is found, repair it or contact your Komatsu distributor.**
- **Do not get on or off the machine from the rear. Using this position is dangerous because it is easy to slip and you cannot be seen from the operator's compartment. Always use the handrail and step at the side when getting on or off the machine.**

If the machine is at an angle, make it horizontal before checking.
Before starting the engine, look around the machine and under the machine to check for loose nut or bolts, or leakage of oil, fuel, or coolant, and check the condition of the work equipment and hydraulic system. Check also for loose wiring, play, and collection of dust at places which reach high temperatures.
Always carry out the items in this section before starting the engine each day.

1. Check for damage, wear, play in work equipment, cylinders, linkage,hoses
   Check that there are no cracks, excessive wear, or play in the work equipment, cylinders, linkage, or hoses. If any abnormality is found, repair it.
2. Remove dirt and dust from around engine, battery radiator
   Check if there is any dirt or dust accumulated around the engine or radiator. Check also if there is any flammable material (dead leaves, twigs, grass, etc.) accumulated around the battery or high temperature engine parts, such as the engine muffler or turbocharger. Remove all such dirt or flammable material.
3. Check for leakage of water or oil around engine
   Check that there is no leakage of oil from the engine or leakage of water from the cooling system. If any abnormality is found, repair it.
4. Check for leakage of oil from power train case, final drive case, hydraulic tank, hose, joints
   Check that there is no oil leakage. If any abnormality is found, repair the place where the oil is leaking.
   Check for leakage of oil from the undercover. Check the ground for traces of oil leakage.
5. Check the undercarriage (track, sprocket, idler, guard) for damage, wear, loose bolts, or leakage of oil from rollers
   If any damage, wear, or oil leakage is found, repair the problem and tighten the bolts.
6. Check for damage to handrail, loose bolts
   Repair any damage and tighten any loose.
7. Check for damage to gauges, lamps on instrument panel, loose bolts
   Check that there is no damage to the panel, gauges and lamps.
   If any abnormality is found, replace the parts. Clean off any dirt on the surface.
8. Check for damage to seat belt and mounting clamps
   Check that there is no abnormality in the seat belt or mounting clamps. If there is any damage, replace with new parts.

https://truckmanualshub.com/

CHECK BEFORE STARTING

Always carry out the items of the checks in this section before starting the engine each day.

CHECK MONITOR PANEL

1. Turn starting switch (1) to the ON position.
2. Check that all monitor and gauge light up for 2 seconds, the warning lamp lights up for 1 seconds, and the alarm buzzer sounds for 2 second.

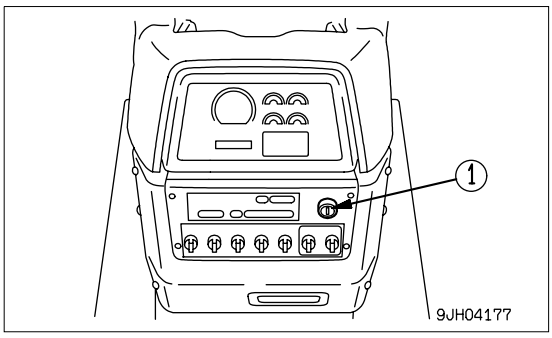

REMARK

If the lamps do not light up, there may be a failure or disconnection in the monitor, so please contact your Komatsu distributor.

NOTICE

When carrying out the checks before starting, do not relay only on the monitor. Always carry out all the items listed for the following check and maintenance.

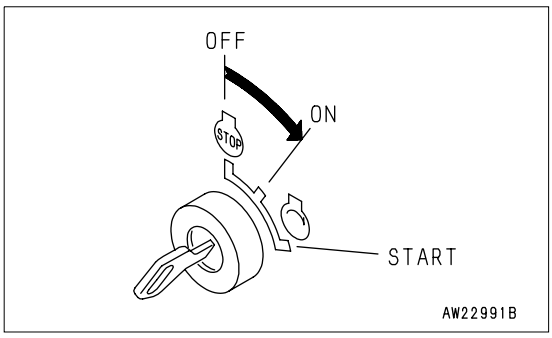

https://truckmanualshub.com/

CHECK COOLANT LEVEL, ADD WATER

⚠ WARNING

- **Normally, do not open the radiator cap. When checking the cooling water level, check the sub-tank when the engine is cold.**
- **Do not remove the cap when the radiator water is hot. Boiling water may spurt out. After the water temperature goes down, turn the cap slowly to release the pressure, then remove it.**

1. Open the engine side cover on the left side of the chassis, and check that the coolant is between the FULL and LOW marks on sub-tank (1). If the water level is low, add water to the FULL level through the water filler port in sub-tank (1).

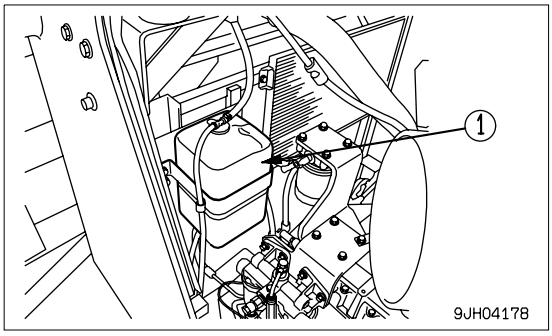

REMARK
The coolant may overflow from the sub-tank drain hose. This is no problem. It occurs because too much coolant has been added.

2. After adding coolant, tighten the cap securely.

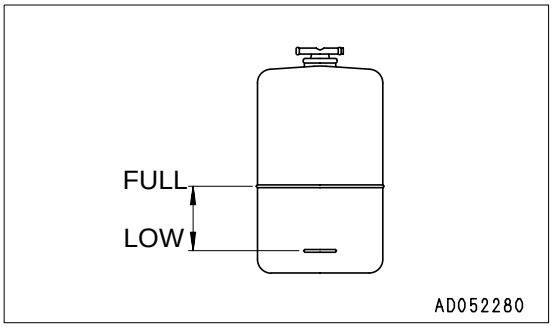

3. If the sub tank is empty, first check for leakage of water, then remove radiator cap (2) and check that the coolant water is above the bottom surface of the strainer as shown in the diagram on the right. Add water if the level is low.
4. After adding water, close the engine side cover.

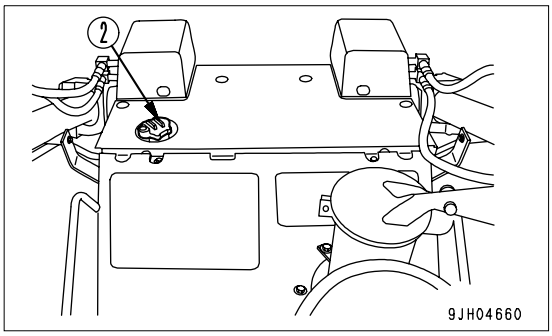

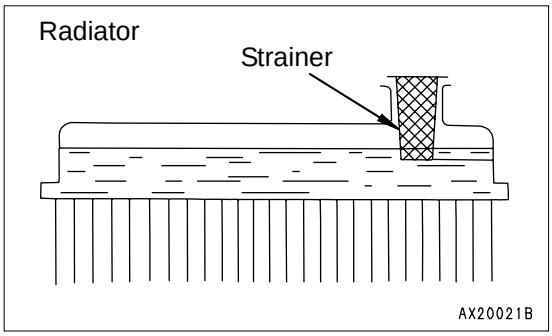

https://truckmanualshub.com/

CHECK FUEL LEVEL, ADD FUEL

WARNING

When adding fuel, never let the fuel overflow. This may cause a fire. If the fuel is spilt, wipe it off completely.

1. Turn the engine starting switch to the ON position and check the fuel level with fuel level gauge (G) on the monitor panel.
   After checking, turn the switch back to the OFF position.

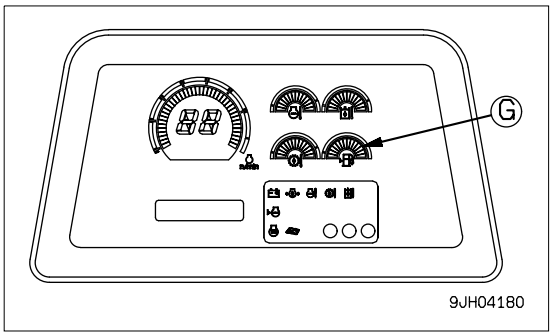

2. After completing work, fill the fuel tank through fuel filler port (F).
3. After adding fuel, tighten the cap securely.
   Fuel capacity: 490 liters

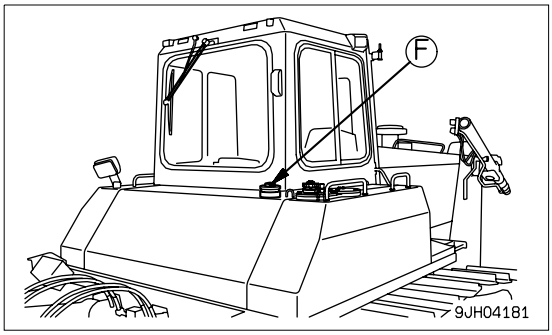

REMARK

- **When dozing on a grade, make sure there is plenty of fuel in the tank so that the engine fuel line does not becomes aerated.**
- **If breather hole (1) on the cap is clogged, the pressure in the tank will drop and fuel will not flow.**
- **Clean the hole from time to time.**

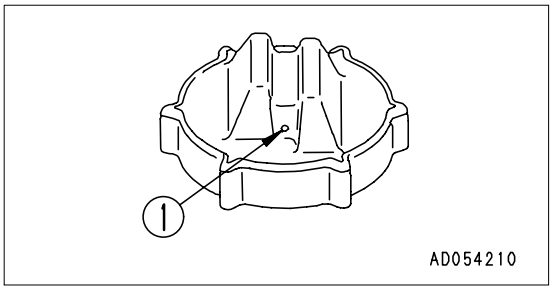

https://truckmanualshub.com/

CHECK OIL LEVEL IN ENGINE OIL PAN, ADD OIL

⚠ WARNING

The parts and oil are at high temperature immediately after the engine is stopped, and may cause serious burns. Wait for the temperature to go down before starting the operation.

1. Open the engine side cover on the left side of the chassis.
2. Remove dipstick (G), and wipe the oil off with a cloth.
3. Insert dipstick (G) fully in the oil filler pipe, then take it out again.

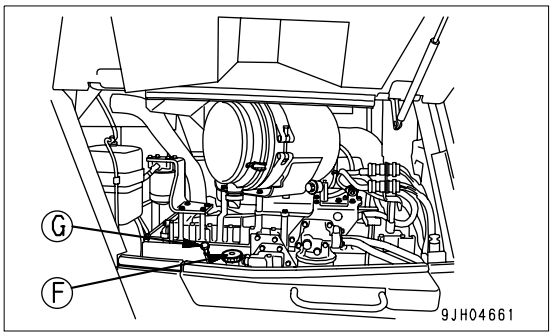

4. The oil level should be between the H and L marks on dipstick (G).
   If the oil level is below the L mark, add engine oil through oil filler (F).

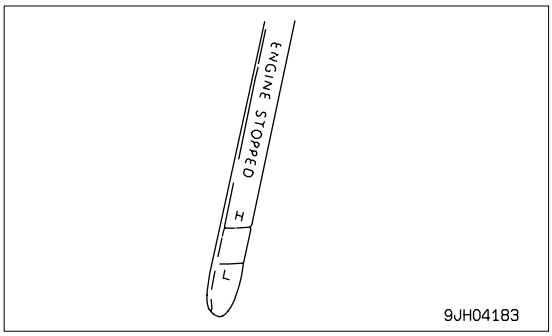

5. If the oil is adove the H mark, drain the excess engine oil from drain plug (1), and check the oil level again.
6. If the oil level is correct, tighten the oil filler cap securely and close the engine side cover.

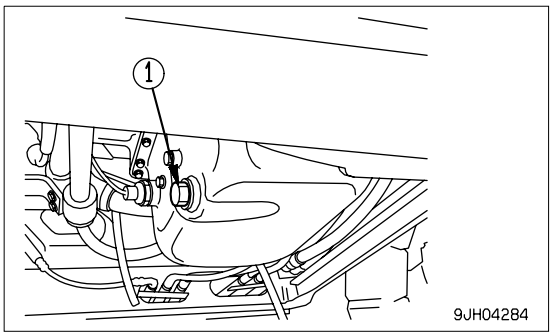

REMARK

- **When checking the oil level after the engine has been operated, wait for at least 15 minutes after stopping the engine before checking.**
- **If the machine is at an angle make it horizontal before checking.**
- **When adding oil, remove the dipstick form the holder to release the air inside the crankcase.**

https://truckmanualshub.com/

CHECK OIL LEVEL IN POWER TRAIN CASE, ADD OIL

1. Remove dipstick (G), and wipe the oil off with a cloth.
2. Insert dipstick (G) fully in the oil filler pipe, then take it out again.
3. Check that the oil level is between the top and bottom marks on dipstick (G).
   If the oil level is below the bottom mark, add engine oil through the dipstick holder.

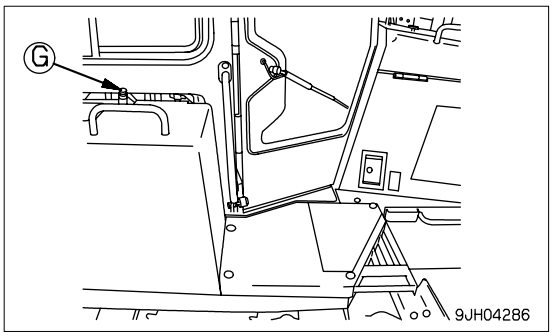

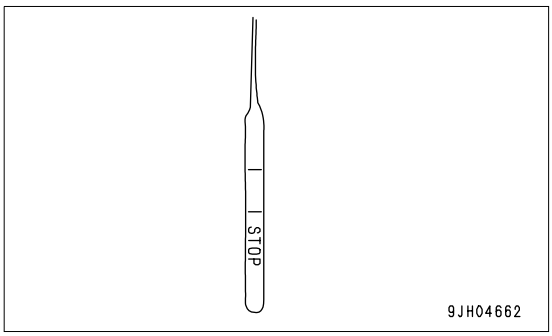

4. If the oil is above the H line, remove drain cover (1) at the left side at the bottom surface of the power train case, loosen drain plug (2), drain the excess oil, then check the oil level again.
5. If the oil level is correct, tighten the oil filter cap securely.

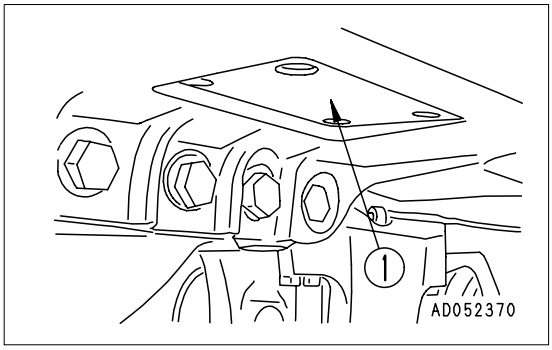

REMARK
When inspecting, if the machine is at an angle, move it to a horizontal place to carry out the check.

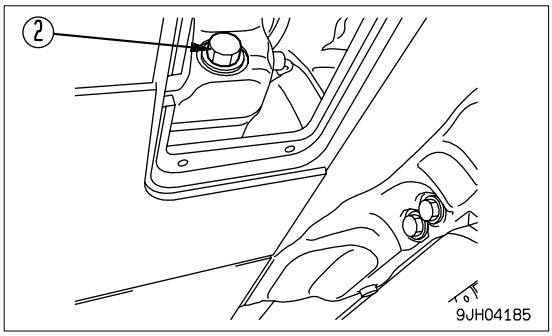

CHECK BRAKE PEDAL TRAVEL

Drive the machine, depress the brake pedal, and check that the machine stops.

https://truckmanualshub.com/

CHECK DUST INDICATOR

1. Check that the yellow piston inside the red zone on the outside diameter of dust indicator (1) is not overlapping.
2. If the yellow piston is overlapping the red zone, clean or replace the element immediately.
   For details of the method of cleaning the element, see “CHECK, CLEAN AND REPLACE AIR CLEANER ELEMENT (4-21)“.

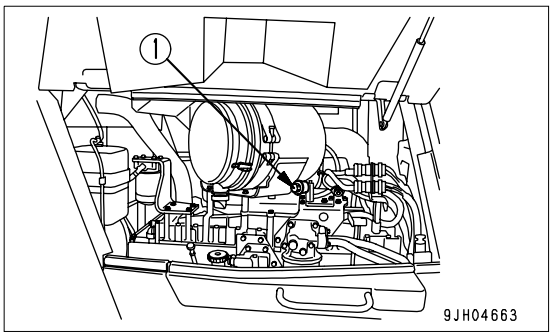

3. After checking, cleaning, and replacing, press the knob of dust indicator (1) to return the yellow piston to its original position.
   - In environments where the rubber deteriorates quickly or the surface becomes damaged (in direct sunlight, dusty areas, etc.), replace before it becomes dirty and it becomes difficult to judge the condition.

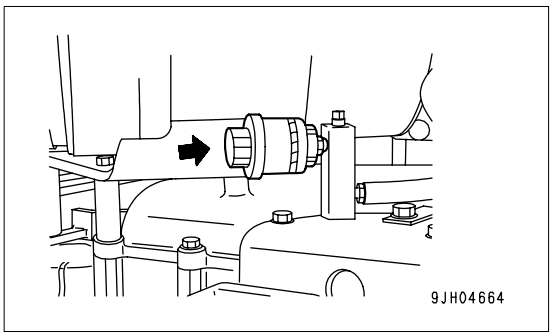

https://truckmanualshub.com/

CHECK OIL LEVEL IN HYDRAULIC TANK, ADD OIL

WARNING

- **When removing the oil filler cap, oil may spurt out, so stop the engine and wait for the oil temperature to go down, then turn the cap slowly to release the internal pressure before removing the cap.**
- **If oil has been added to above the H mark, stop the engine and wait for the hydraulic oil to cool down. Then remove drain plug (P), loosen drain valve (1), and drain the excess oil.**

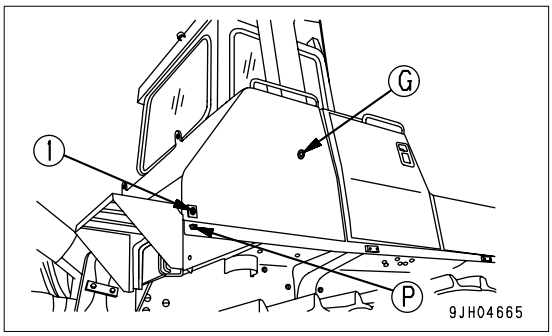

1. Lower the blade to the ground and stop the engine. Wait for about 5 minutes before checking oil level. If the oil level should be between H and L in sight gauge (G).

NOTICE
If the oil level is above the H line, do not add oil. Doing so may lead to damage to the oil pressure circuit and spouting out of oil.

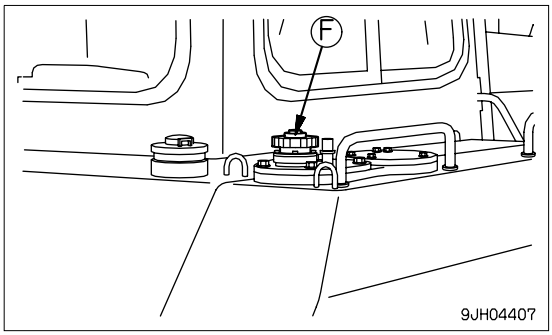

2. If the level is below the L mark, add engine oil through oil filler (F).

REMARK
When inspecting, if the machine is at an angle, move it to a horizontal place to carry out the check.

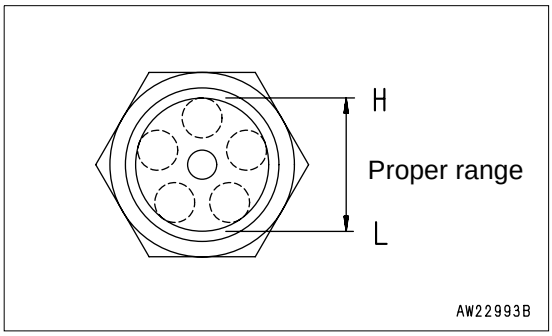

https://truckmanualshub.com/

CHECK ELECTRIC WIRINGS

⚠ WARNING

- **If fuses are frequently blown or if there are traces of short circuit on the electrical wiring, locate the cause and carry out repair, or please contact your Komatsu distributor.**
- **Accumulation of flammable material (dead leaves, twigs, grass, etc.) around the battery may cause fire, so always check and remove such material.**
- **Keep the top surface of the battery clean and check the breather hole in the battery cap. If it is clogged with dirt or dust, wash the battery cap to clear the breather hole.**

Check that there is no damage to the fuse, that a fuse of the specified capacity is being used, that there are no signs of any disconnection, breakage, or short circuit in the electric wiring, check for any loose terminals, and tighten any loose terminals that are found.
Be particularly careful to check the wiring for the battery, starting motor, and alternator.
In addition, if any flammable material is accumulated around the battery, remove it.
For repairs or investigation of the cause, please contact your Komatsu distributor.

CHECK THAT LAMPS LIGHT UP

1. Turn the starting switch key to the ON position.

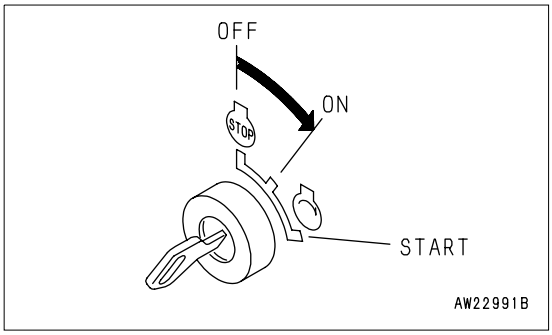

2. Turn the front lamp and working lamp switch to the ON (b) position and check that the front lamps and working lamp light up.

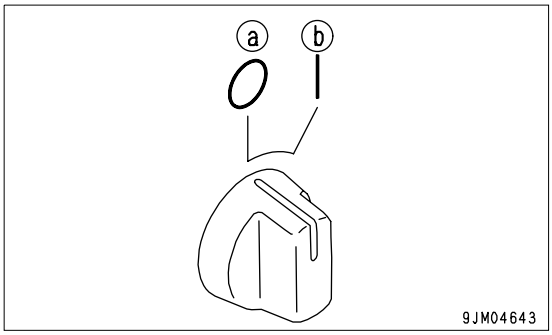

3. Turn the rear lamp switch to the ON (b) position and check that the rear lamps on the left and right fenders light up.
   If the lamps do not light up, there is probably a broken bulb or disconnection in the wiring, so contact your Komatsu distributor for repairs.

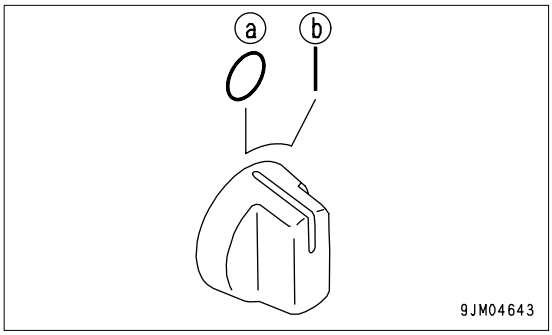

https://truckmanualshub.com/

CHECK HORN SOUND

1. Turn the starting switch key to the ON position.

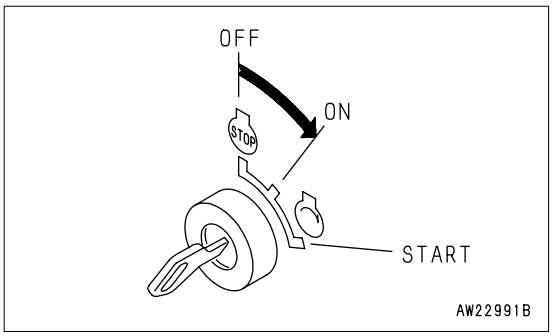

2. Push the horn switch and check that the horn sounds.

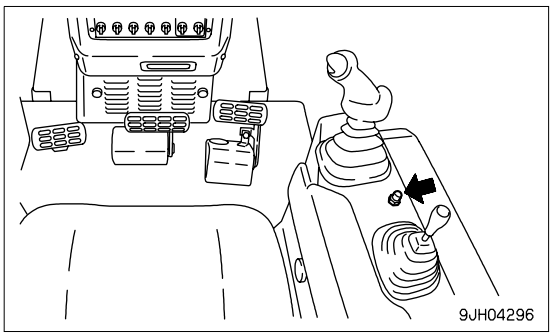

CHECK BACKUP ALARM SOUND

1. After starting the engine, run it at idling, depress the brake to the fullest extent, and set the parking lever free.

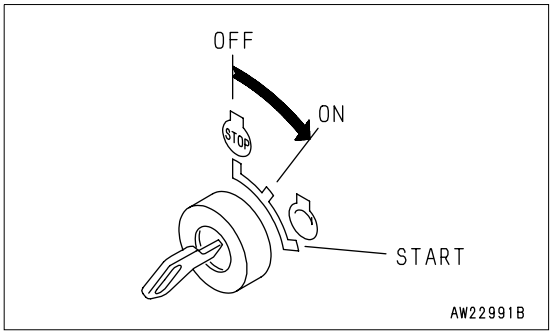

2. While depressing the brake pedal to the fullest extent, set the joystick to the REVERSE position. The buzzer must sound immediately. The buzzer will continue to sound until the joystick is moved to the NEUTRAL or FORWARD position.
3. As soon as it is confirmed that the buzzer is working properly, set the joystick to the NEUTRAL position, put the parking lever to the LOCK position, and then release the brake pedal.

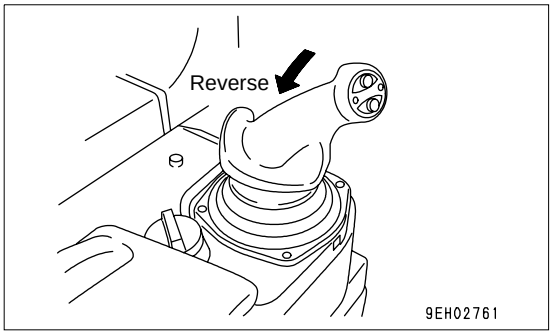

https://truckmanualshub.com/

ADJUSTMENT

ADJUSTING OPERATOR'S SEAT

WARNING

- **Adjust the seat position at the beginning of each shift or when operators change.**
- **Adjust the seat so that the brake pedal can be depressed all the way with the operator's back against the backrest.**

(A) Fore-and-aft adjustment
Pull lever (1), set the seat to a position where it is easy to operate, then release the lever.
Fore-aft adjustment: 200 mm (10 stages)

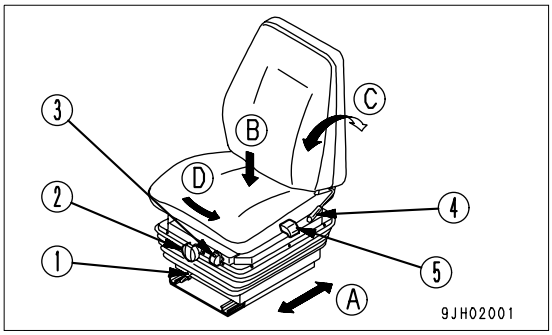

(B) Weight and height adjustment of seat
- Turn knob (2) under the seat so that weight adjustment indicator (3) displays the green range. The height can be adjusted by turning the knob (2) while the green range is displayed.
- Turn the knob clockwise to raise the seat and turn the knob counterclockwise to lower the seat.

Height adjustment range: stepless, 75 mm
Weight adjustment range: 50 to 130kg

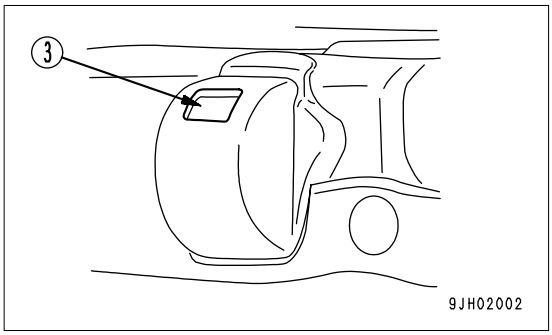

(C) Adjust reclining angle

REMARK
When the seat is pushed forward, the available reclining angle becomes greater; when the seat is pushed back, the available reclining angle becomes smaller. When moving the seat back, return the seat back to its original position before moving the seat.

Pull up lever (4), set the seatback to a position where it is easy to operate, then release the lever.

(D) Adjusting direction of seat
Pull up lever (5) to unlock the seat, and the seat can be turned by hand to the position of 15° on the right.
After changing the direction of the seat, return the lever securely to lock the seat.
- Change the direction of the seat to the right for the ease of operation of the ripper.

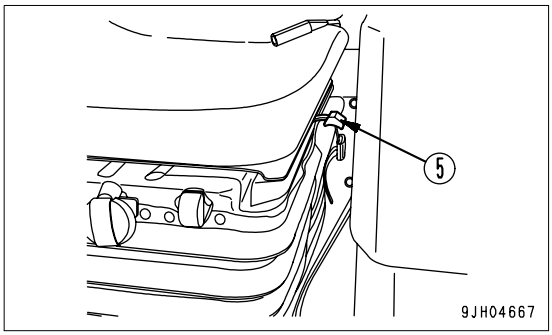

https://truckmanualshub.com/

USING SEAT BELT

WARNING

- **Before fastening the seat belt, inspect the securing brackets and belt for abnormal conditions.**
- **Replace any worn or damaged seat belt or the securing brackets.**
- **Even if no abnormality can be seen in the belt, replace the seat belt every 3 years. The date of manufacture of the belt is shown on the back of the belt.**
- **Adjust and fasten the seat belt before operating the machine.**
- **Always sure seat belt when operating the machine.**
- **Fit the seat belt across your lap without twisting.**

FASTEN THE BELT AND REMOVE IT

1. Sit on the seat, depress the brake pedal fully, and adjust the seat so that your back is pressed against the backrest.
2. After adjusting the seat position, adjust tether belt (1). Tense the tether belt and install it when there is no one sitting on the seat.
3. Sit on the seat and hold tongue (4) connected to wind-in mechanism (2) and pull out the belt slowly so that the belt will cover your abdomen sufficiently.
4. Insert tongue (4) in buckle (3) until it clicks. The belt is pulled back into wind-in mechanism (2) until it is fitted to your abdomen. The belt is locked under this condition and cannot be extended anymore. Fit the belt to your abdomen without twisting it.

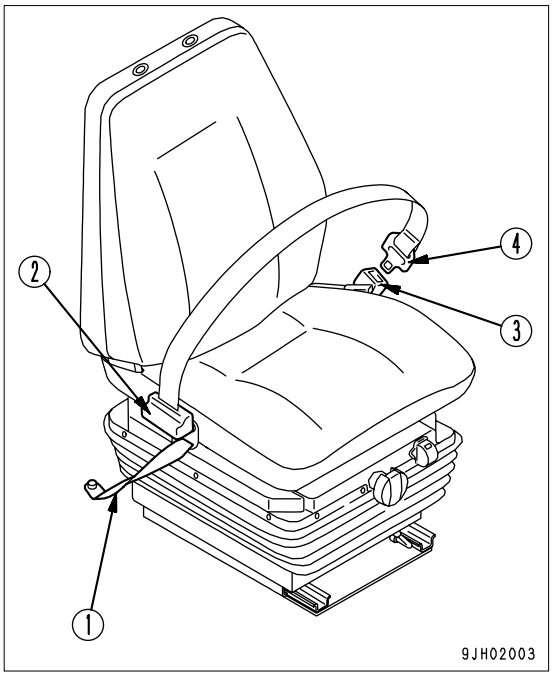

REMARK

If the belt is locked before the tongue is inserted in the buckle, let it return to the wind-in mechanism, then repeat the above procedure from the first.

5. Pull the belt to check that it is securely locked in position.
6. When removing the belt, press the red button on buckle (3). The belt will automatically be wound in.

Check the mounting bolts of the belt fitting on the machine body for looseness, and re-tighten them if necessary.
Tightening torque: 24.5 ± 4.9 N·m (2.5 ± 0.5 kgf·m)
If the seat is scratched or frayed or if any of the fittings is broken or deformed from long service, replace the seat belt immediately.

ADJUST MIRROR

Loosen nut (1) of the mirror and adjust the mirror to a position where it gives the best view from the operator's seat.
In particular, be sure to adjust the mirror so that people at the rear left or right of the machine can be seen clearly.

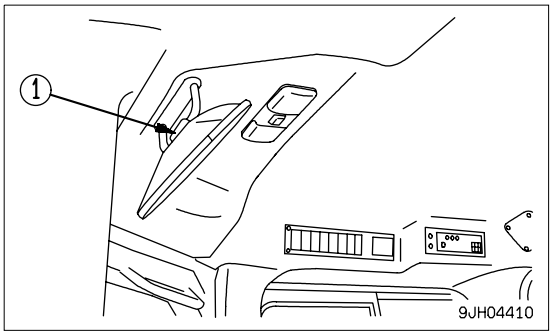

https://truckmanualshub.com/

ADJUST JOYSTICK (PCCS LEVER)

WARNING

After moving case (2) in order to adjust the position of the steering, directional, and gearshift lever, check that lock lever (1) is fitted securely in the notch hole when securing it. Check that it is in the LOCK position. If the lock condition is not complete, the steering, directional, and gearshift lever may move at an unexpected time and cause serious injury or damage.

The steering, directional, and speed lever (wrist control type single lever: joystick) can be adjusted by 90 mm in 9 stages to the front or rear. Adjust to the most suitable position to match the adjustment of the operator's seat.

1. Pull up lock lever (1) at the rear of case (2) on the left side of the operator's compartment and make it free.

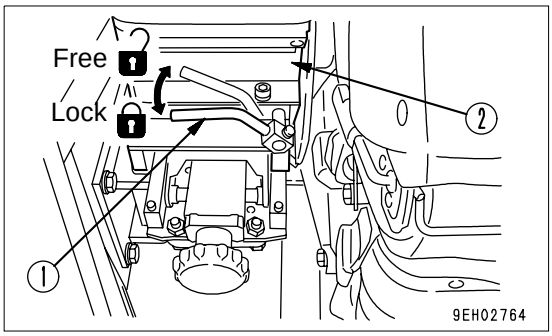

2. Keep lock lever (1) pulled up and use your other hand to grip the front of case (2), then move it to the front with your left and right hands. The joystick moves together with the case.
3. When moving, set to the desired position of the positions where a click can be heard. Then pull up lock lever (1) and release it. Lock lever (1) returns automatically to the LOCK position.

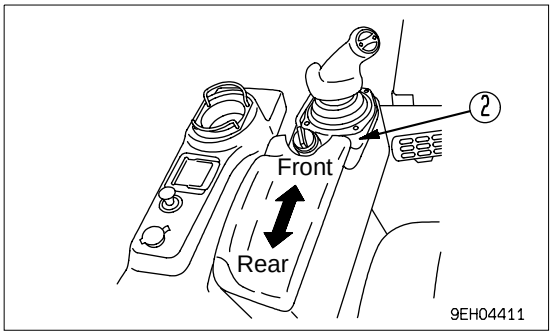

REMARK
PCCS: Palm command control system

ADJUST ARMREST

The height of the armrest on the left and right sides of the operator's seat can be adjusted to 3 positions. After adjusting the operator's seat, adjust the armrest to a suitable height.

https://truckmanualshub.com/

ADJUST ARMREST (RIGHT)

Armrest (1) on the right side of the operator's cab part can be adjusted up 30 mm or down 30 mm based on the standard height (center) in three stages.

1. Loosen knob (2) (two places).

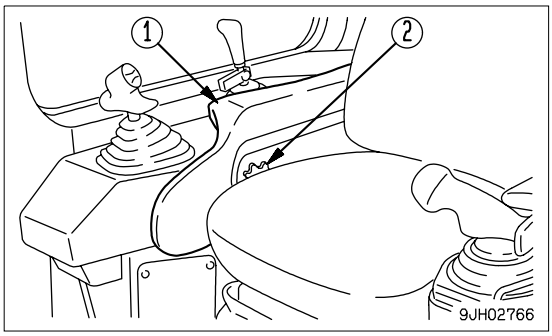

2. Move the armrest on the operator's seat to the front, then align the position of the 3 holes (high, middle, low).
3. Tighten knob (2) securely.

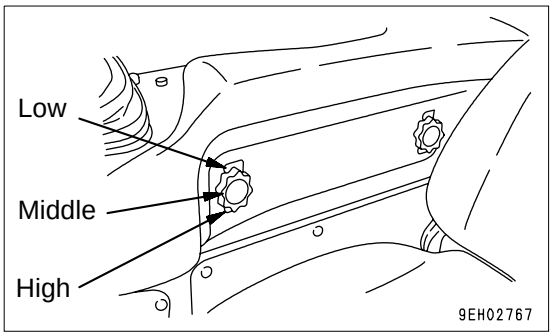

ADJUST ARMREST (LEFT)

The armrest on the left side of the operator's compartment can be adjusted to 2 heights.
It is possible to adjust the standard height up 30 mm or down 30 mm steplessly.
The joystick moves as a unit.

Turn up/down left adjustment knob (1) to adjust the height.
Turn the knob to adjust as follows.
Turn CLOCKWISE to move DOWN
Turn COUNTERCLOCKWISE to move UP

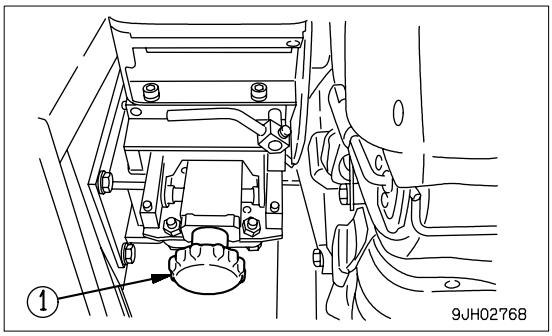

https://truckmanualshub.com/

OPERATIONS AND CHECKS BEFORE STARTING ENGINE

WARNING

- **When starting the engine, check that the safety lock lever and parking lever is securely at the LOCK position.**
- **If the control levers are not locked and they are touched by accident when starting the engine, the work equipment may move unexpectedly, and this may lead to a serious injury or death.**
- **When standing up from the operator's seat, always set the safety lock lever to the LOCK position, regardless of whether the engine is running or stopped.**

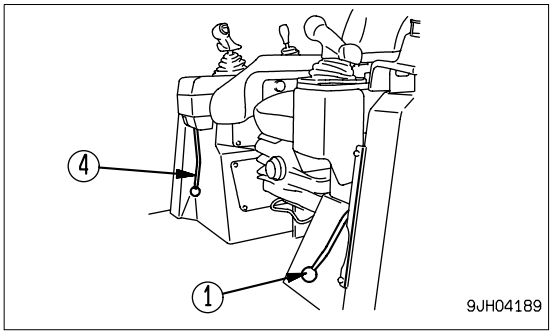

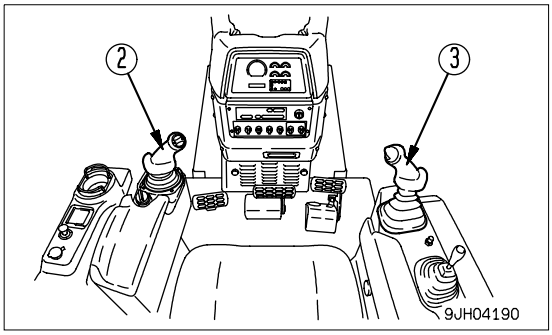

1. Check that parking lever (1) is locked. If this lever is not at the LOCK position, the engine will not start.

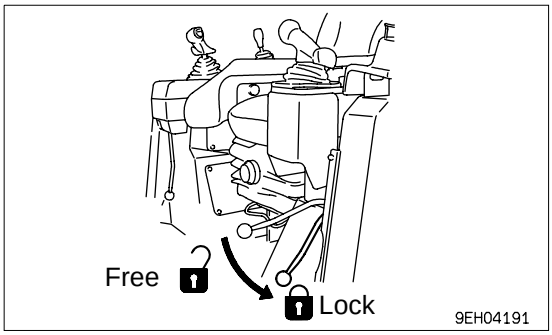

2. Check that joystick (2) is at the 1st position.

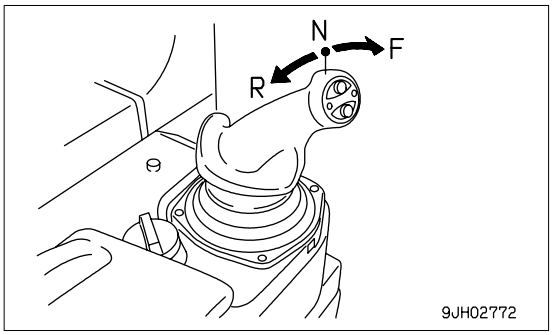

REMARK

The engine cannot be started if joystick (steering, directional, and gearshift lever) (2) is not at the N position.

If joystick (steering, directional, and gearshift lever) (2) is at F or R, the letter P on display panel A will flash.

https://truckmanualshub.com/

3. Check that the blade is lowered to the ground and that blade control lever (3) is at the HOLD position. If it is at the FLOAT position, the engine will not start.

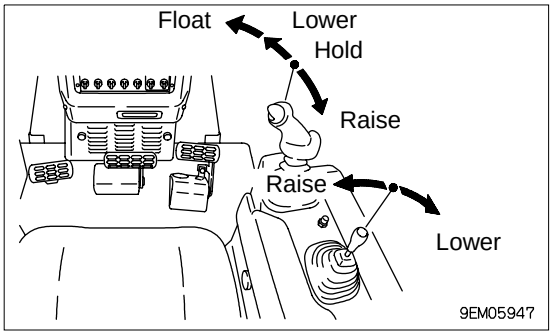

4. Check that the ripper is lowered to the ground.
5. Check that safety lever (4) is locked.
   If safety lever (4) is locked, the blade control lever is returned to the HOLD position even if it is at the FLOAT position.

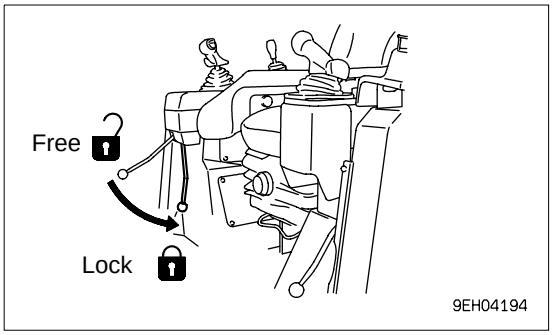

https://truckmanualshub.com/

STARTING ENGINE

NORMAL STARTING

⚠ WARNING

- **Start the engine only after sitting down in the operator's seat.**
- **Do not attempt to start the engine by short-circuiting the engine starting circuit. Such an act may cause serious bodily injury or fire.**
- **Check that there are no persons or obstacles in the surrounding area, then sound the horn and start the engine.**
- **Exhaust gas is toxic. When starting the engine in confined spaces, be particularly careful to ensure good ventilation.**

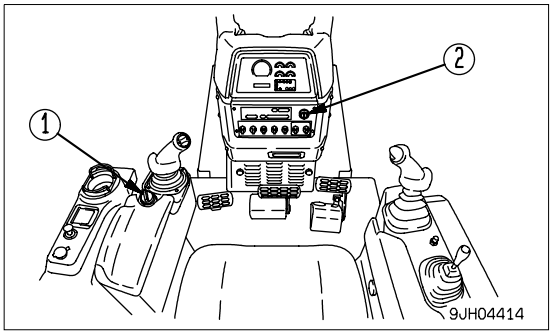

NOTICE

- **Do not crank the starting motor continuously for more than 20 seconds. If the engine does not start, wait for at least 2 minutes, then repeat the procedure from Step 2.**
- **Before starting the engine, check that the fuel control dial is at the low idling (MIN) position.**
- **On this machine, to protect the turbocharger, a turbo protect function is provided. In cold weather, even if fuel control dial (1) is operated immediately after starting the engine, the engine speed may not change for several seconds.**
- **If the fuel control dial is at the FULL position, the engine will accelerate suddenly and cause damage to the engine parts, so set it to an intermediate or low speed position.**

1. Turn fuel control dial (1) to the center position between MIN and MAX position.

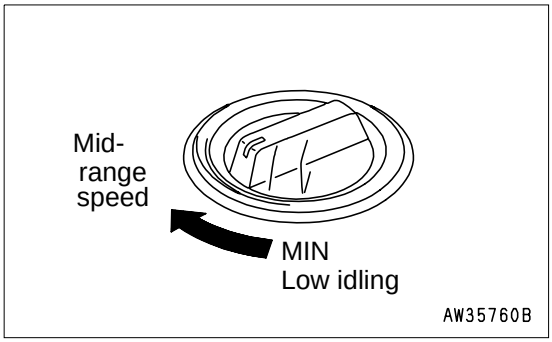

2. Turn the key of starting switch (2) to the START position.

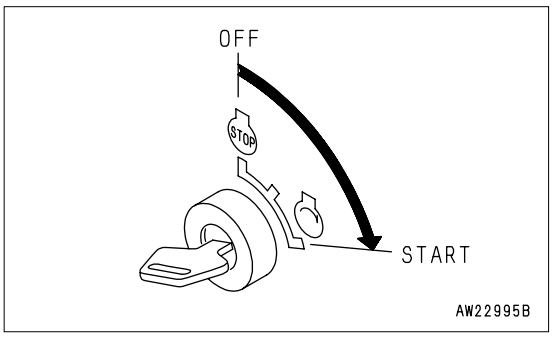

https://truckmanualshub.com/

3. When engine is started, release the key of starting switch (2) and the key will return automatically to ON.

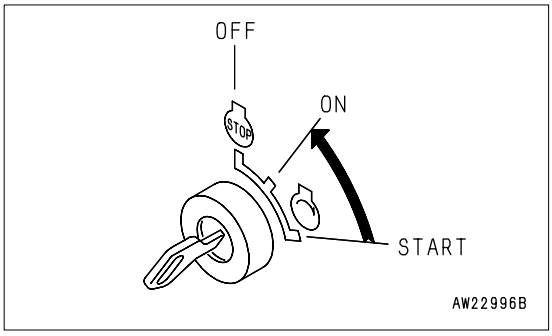

STARTING IN COLD WEATHER

⚠ WARNING

- **Start the engine only after sitting down in the operator's seat.**
- **Do not attempt to start the engine by short-circuiting the engine starting circuit. Such an act may cause a serious bodily injury or fire.**
- **Check that there are no persons or obstacles in the surrounding area, then sound the horn and start the engine.**
- **Never sue starting aid fluids as they may cause explosions.**
- **Exhaust gas is toxic. When starting the engine in confined spaces, be particularly careful to ensure good ventilation.**

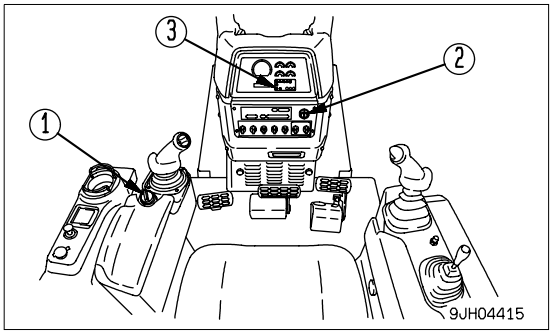

NOTICE

- **Do not crank the starting motor continuously for more than 20 seconds. If the engine does not start, wait for at least 2 minutes, then repeat the procedure from Step 2.**
- **Before starting the engine, check that the fuel control dial is at the low idling (MIN) position.**
- **On this machine, to protect the turbocharger, a turbo protect function is provided. In cold weather, even if fuel control dial (1) is operated immediately after starting the engine, the engine speed may not change for several seconds.**
- **If the fuel control dial is at the FULL position, the engine will accelerate suddenly and cause damage to the engine parts, so set it to an intermediate or low speed position.**

1. Turn fuel control dial (1) to the center position between MIN and MAX position.

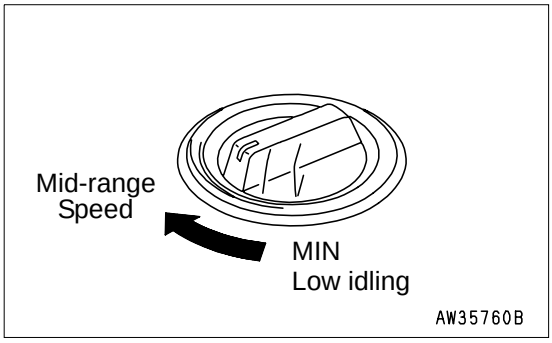

https://truckmanualshub.com/

2. Turn the key of starting switch (2) to the ON position.

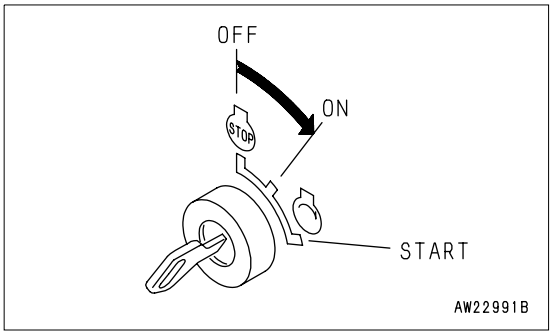

3. Check that preheating pilot lamp (3) on the monitor panel is lighted up.

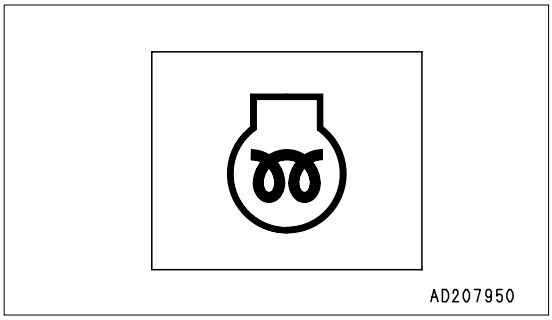

4. Keep this condition until preheating pilot lamp (3) goes off.

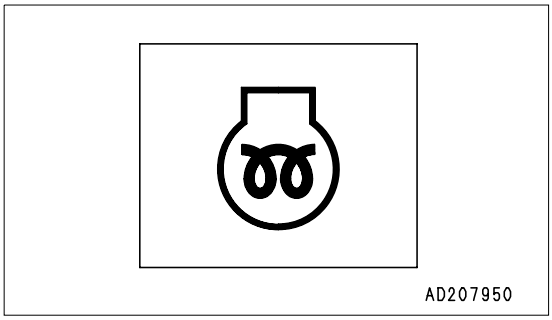

5. When preheating pilot lamp (3) goes off, turn the key of starting switch (2) to the START position to crank the engine.
   The time that preheating pilot lamp (3) stays on changes according to the ambient temperature as shown in the table below.

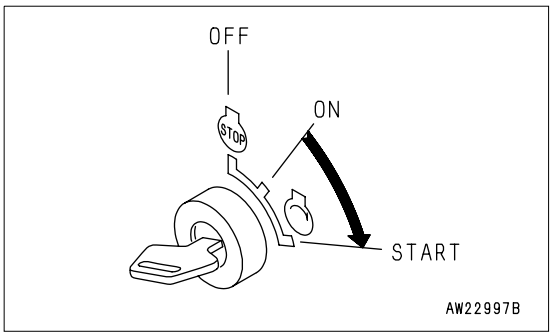

Ambient temperature	Preheat time
-5°C to -10°C	20 to 27 seconds
-10°C to -20°C	27 to 40 seconds
-20°C to -30°C	40 seconds

6. When the engine starts, release the key in starting switch (2). The key will return automatically to the ON position.

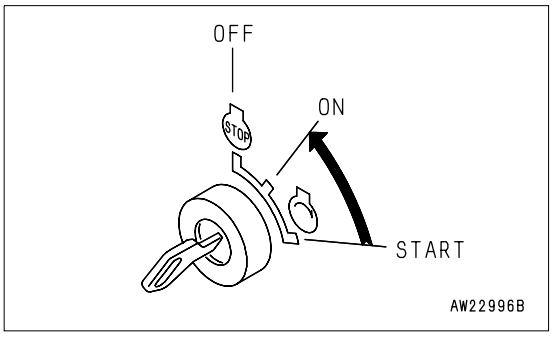

REMARK

https://truckmanualshub.com/

Immediately after starting the engine, run at idling. While running the engine, release the decelerator pedal and do not operate the work equipment.
Guideline for idling time
- **Cold weather: At least 15 seconds**
- **1st start after changing engine oil or engine oil filter: 20 seconds**

7. When the engine rotation stabilizes, return to the low idling (MIN) position of fuel control dial (1) and then carry out the warming-up operation.

REMARK
- **Regardless of the ambient temperature, if the key in the starting switch (2) is turned from the OFF position to the left, preheating pilot lamp (3) will light up and preheating will start. (Preheating continues while the starting switch is being held at the left.)**
- **For details of the preheating time, see the table in Step 5.**
- **During the preheating operation, preheating pilot lamp (3) lights up to show that preheating is being carried out.**
- **If the engine does not start with the above operation, wait for at least 2 minutes, and repeat the procedure in Steps 3 and 4.**

REMARK
- **The turbo protect function is a function to protect the turbocharger. It keeps the engine speed below 1000 rpm for a set time after the engine is started even if the pedal is fully depressed.**
- **The basic function acts to cancel the actuation of the turbo protect function when the engine oil pressure rises. The settings for the maximum actuation time are as shown below. When the turbo protect function is being actuated, the engine speed does not change even when the fuel control dial is operated.**

Cooling water temperature	Turbo protect time (sec.)
Above 10°C	0
10 to -30°C	Change 0 to 20
below -30°C	20

https://truckmanualshub.com/

OPERATIONS AND CHECKS AFTER STARTING ENGINE

WARNING

- **If there has been any abnormal actuation or trouble, turn the starting switch key to the OFF position.**
- **If the work equipment is operated without warming the machine up sufficiently, the response of the work equipment to the movement of the control lever will be slow, and the work equipment may not move as the operator desires, so always carry out the warming-up operation. Particularly in cold areas, be sure to carry out the warming-up operation fully.**

BREAKING IN THE MACHINE

CAUTION

Your Komatsu machine has been thoroughly adjusted and tested before shipment. However, operating the machine under severe conditions at the beginning can adversely affect the performance and shorten the machine life.
Be sure to break-in the machine for the initial 100 hours (as indicated by the service meter).
During breaking-in operations, follow the precautions described in this manual.

- Run the engine at idling for 15 seconds after starting it. During this time, do not operate the control levers or fuel control dial.
- Idle the engine for 5 minutes after starting it up.
- Avoid operation with heavy loads or at high speeds.
- Immediately after starting the engine, avoid sudden starts, sudden acceleration, unnecessary sudden stops, and sudden changes in direction.

NORMAL OPERATION

NOTICE

- **Do not carry out operations or operate the levers suddenly when the hydraulic oil is still at low temperature. Always carry out the warming-up operation until the hydraulic oil temperature monitor displays the green range. This will help to extend the machine life.**
- **Do not accelerate the engine suddenly before the warming-up operation is completed.**
- **Do not run the engine at low idling or high idling continuously for more than 20 minutes. This will cause leakage of oil from the turbocharger oil supply piping.**
- **If it is necessary to run the engine at idling, apply a load from time to time or run the engine at a mid-range speed.**
- **If engine oil pressure caution lamp (3) flashes or the buzzer sounds intermittently, stop the engine and check for the cause.**

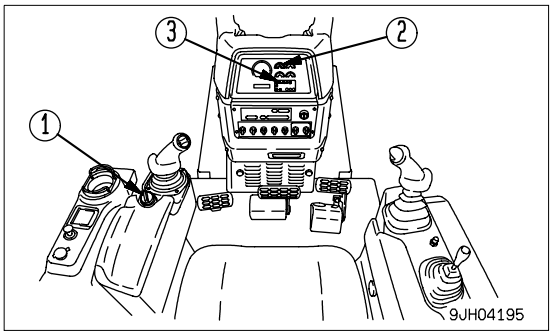

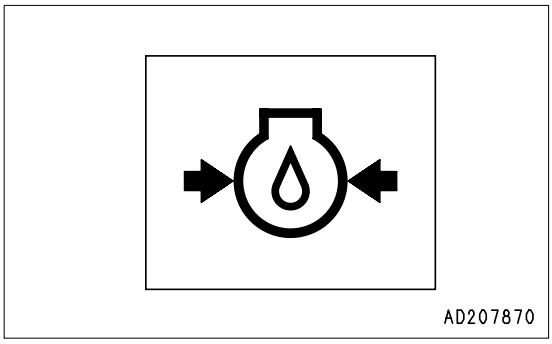

https://truckmanualshub.com/

1. Turn fuel control dial (1) to the center position between LOW IDLING (MIN) and HIGH IDLING (MAX) and run the engine at medium speed for about 5 minutes with no load.
2. After warm-up run is completed, check gauges and caution lamps for proper operation. If any abnormality is found, repair it.
   Continue to run the engine at light load until engine water temperature gauge indicator (2) falls within the green range (B).
   (A): White range
   (B): Green range
   (C): Red range

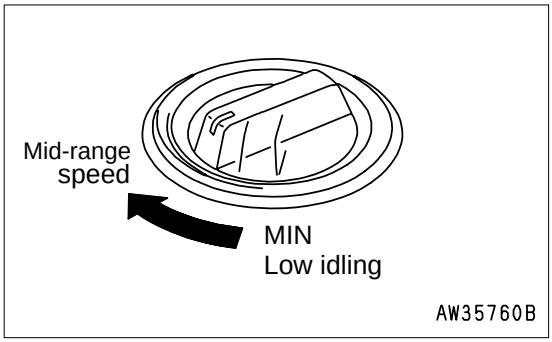

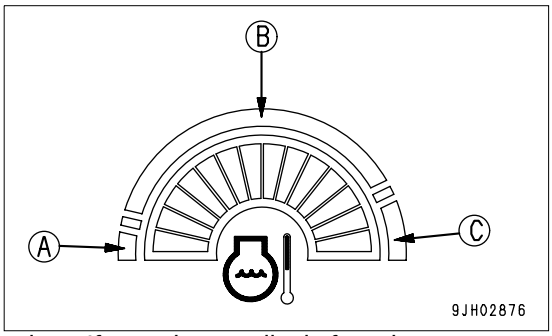

3. Check that there is no abnormal exhaust gas color, noise or vibration. If any abnormality is found, contact your Komatsu distributor.

https://truckmanualshub.com/

IN COLD AREAS

1. Turn fuel control dial (1) to the center position between LOW IDLING (MIN) and HIGH IDLING (MAX) and run the engine at medium speed for about 10 minutes with no load.

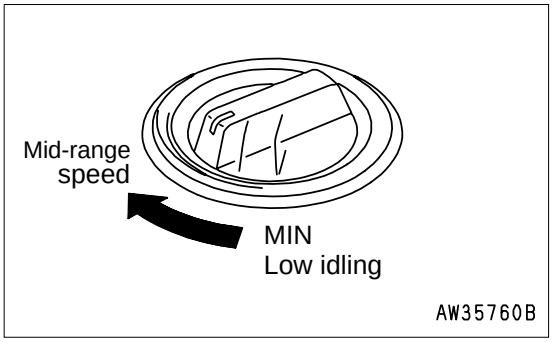

2. Operate blade control lever (4) to the RAISE position, then keep the blade raised to the maximum height and continue to relieve the circuit for 10 minutes.
3. Finally, operate blade control lever (3) and ripper control lever to operate all the blade and ripper cylinders several times.
   If the oil temperature in the work equipment is not properly raised, there will be a time lag in the response of the work equipment and steering.

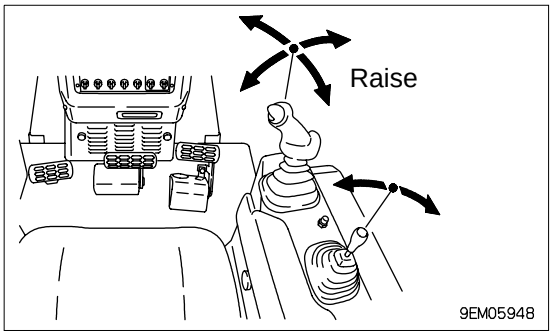

4. After warm-up run is completed, check gauges and caution lamps for proper operation. If any abnormality is found, repair it.
   Continue to run the engine at light load until engine water temperature gauge indicator (2) falls within the green range (B).
   (A): White range
   (B): Green range
   (C): Red range

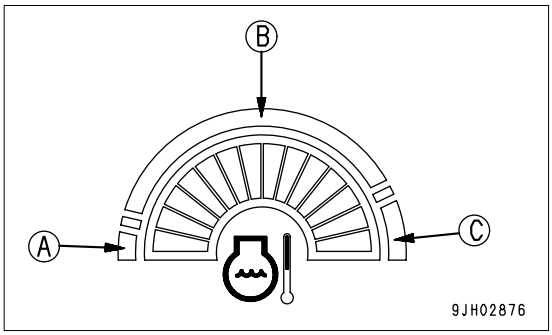

REMARK
If the oil temperature in the power train is not raised properly, it will take longer to accelerate to the maximum speed.

5. Check that there is no abnormal exhaust gas color, noise or vibration. If any abnormality is found, contact your Komatsu distributor.

https://truckmanualshub.com/

STOPPING ENGINE

NOTICE
If the engine is abruptly stopped before it has cooled down, engine life may be greatly shortened. Consequently, do not abruptly stop the engine apart from an emergency. In particular, if the engine has overheated, do not abruptly stop it but run it at medium speed to allow it to cool gradually, then stop it.

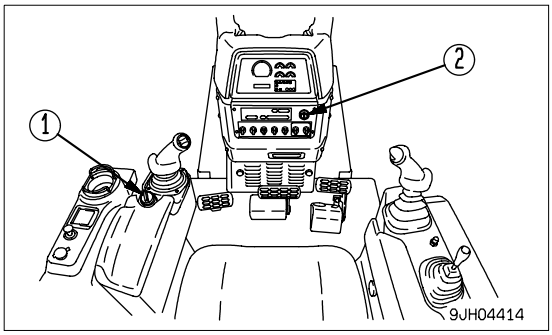

1. Place fuel control dial (1) in the low idling (MIN) position and run the engine at low idling speed for about 5 minutes to allow it to gradually cool down.

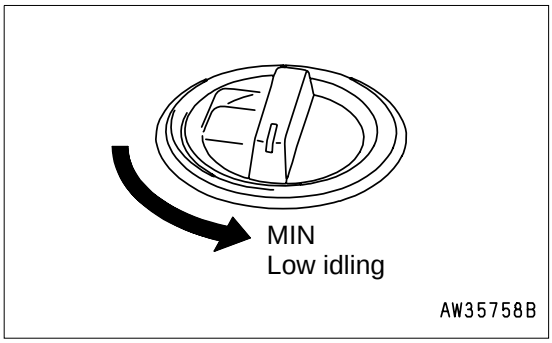

2. Place fuel control lever (1) in the engine stop position and stop the engine.

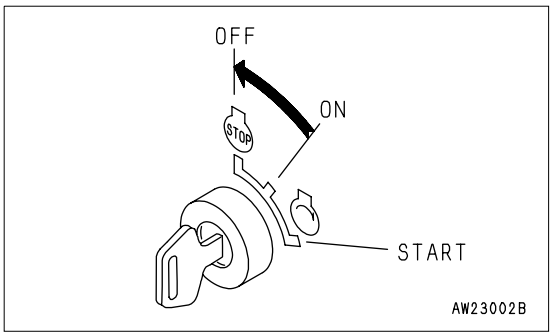

3. Remove the key of starting switch (2).

CHECK AFTER STOPPING ENGINE

1. Walk around the machine and check the work equipment, machine exterior, and undercarriage, and check also for leakage of oil or water. If any abnormalities are found, repair them.
2. Fill the fuel tank.
3. Check the engine compartment for paper and debris. Clean out any paper and debris to avoid a fire hazard.
4. Remove any mud affixed to the undercarriage.

https://truckmanualshub.com/

MOVING MACHINE OFF

⚠ WARNING

- **When moving the machine off, check that the area around the machine is safe, and sound the horn before moving.**
  Do not allow anyone to enter the area around the machine.
- **There is a blind spot at the rear of the machine, so be particularly careful when traveling in reverse.**
- **When moving the machine off on a slope, always keep brake pedal (8) depressed even after releasing parking lever (1).**
- **When starting the machine off up a steep slope, turn fuel control dial (5) fully to run the engine at full speed, and keep brake pedal (8) and deceleration pedal (6) depressed. Then operate steering, directional, and gearshift lever (4) from the N position to the direction of travel and release brake pedal (8) slowly. When the travel speed rises, release deceleration pedal (6) slowly.**

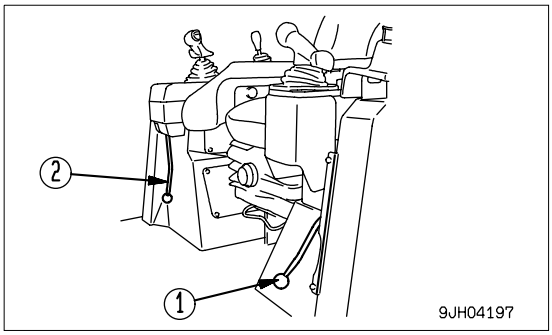

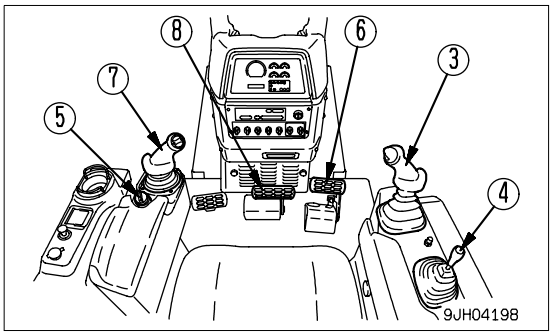

1. Set parking lever (1) to the FREE position

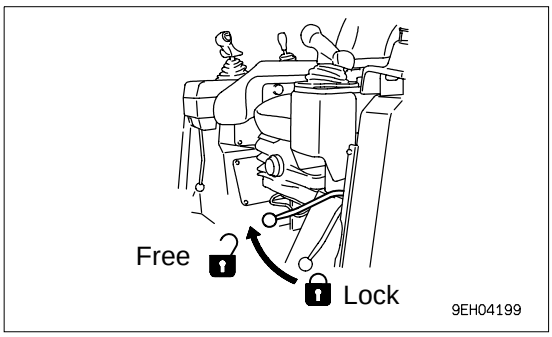

2. Set safety lever (2) for blade control lever (3) and ripper control lever (4) to the FREE position.

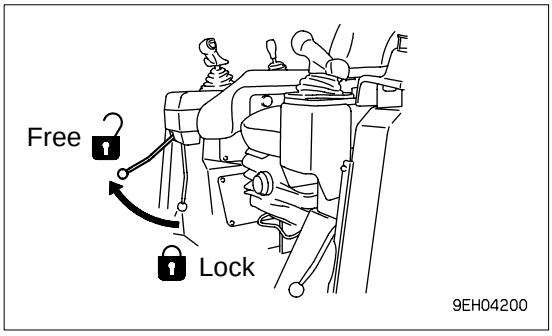

3. Operate blade control lever (3) and ripper control lever (4) to the RAISE position, raise the blade 40 - 50 cm from the ground, and raise the ripper to the maximum height.

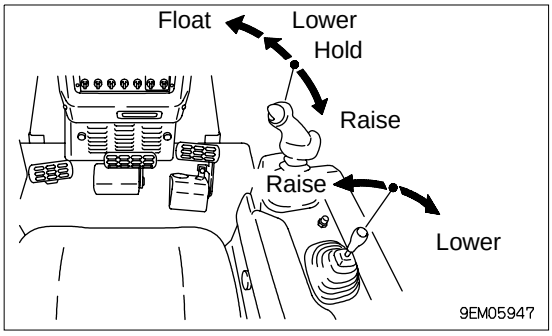

https://truckmanualshub.com/

4. Turn fuel control dial (5) to the full speed (MAX) position, raise the engine speed, and fully depress decelerator pedal (6).

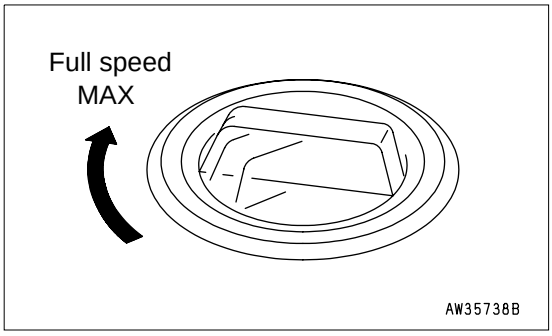

5. Move joystick (7) to the F (FORWARD) or R (REVERSE) position, gradually release the decelerator pedal (6) and allow the machine to move off

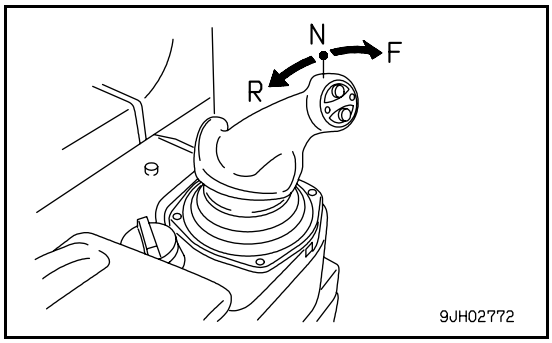

https://truckmanualshub.com/

STOPPING MACHINE

⚠ WARNING

- **Avoid stopping suddenly. Give yourself ample room when stopping.**
- **When stopping the machine, select flat hard ground and avoid dangerous places. If it is unavoidably necessary to park the machine on a slope, place the parking lever (1) in the LOCK position and insert blocks underneath the track shoes. As an additional safety measure, thrust the blade into the ground.**
- **If the work equipment control lever is touched by accident, the work equipment may move suddenly, and this may lead to a serious accident. before leaving the operator's seat, always operate the safety lever (2) to place it securely at the LOCK position.**

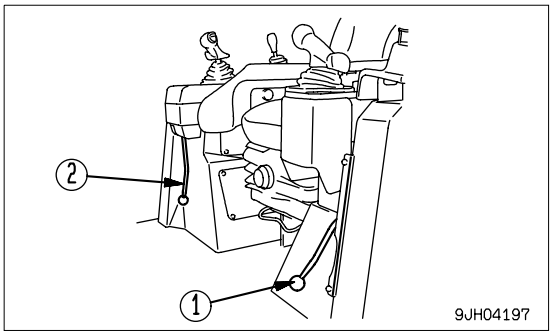

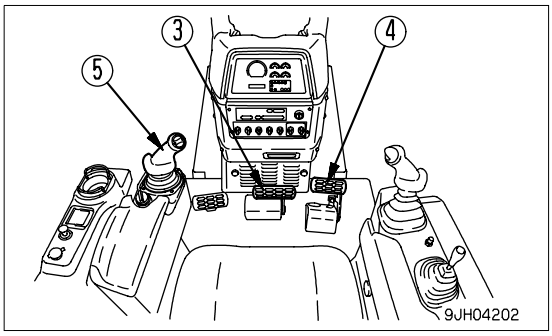

1. Depress brake pedal (3) to apply the brake.

NOTICE
If the brake is depressed when the engine speed or travel speed is high, the brake disc may make a slipping sound. Normally, depress decelerator pedal (4) to reduce the engine speed and travel speed before depressing the brake.

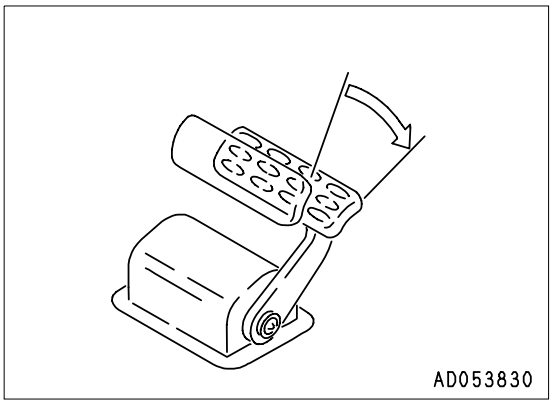

2. Set joystick (5) at the neutral position.

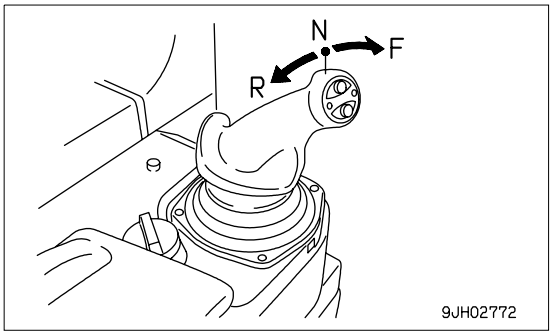

https://truckmanualshub.com/

SHIFTING GEAR

The machine does not have to be stopped to shift gears.

1. Move joystick (1) to the desired gear position to shift gears.

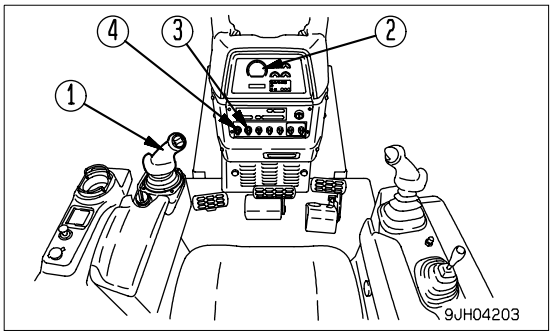

GEAR SHIFTING

- When the joystick is at the FORWARD or REVERSE position and switch (a) or switch (b) is pushed, the transmission speed will change.
  UP switch (a): Each time the switch is pressed, the transmission will shift up one speed.
  DOWN switch (b): Each time the switch is pressed, the transmission will shift down one speed.

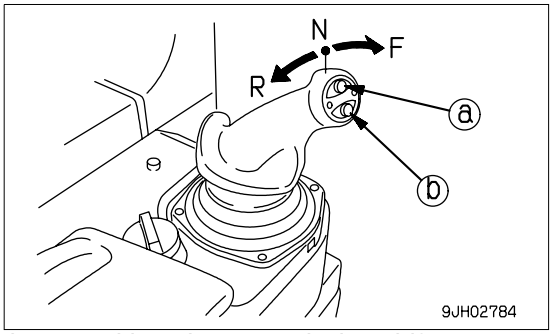

- When the lever is operated forward (to set to FORWARD) from the N position, the transmission shifts to F1.
  If the UP switch is pressed once when the transmission is in F1, the transmission shifts to F2.
  If the UP switch is pressed once when the transmission is in F2, the transmission shifts to F3.
  If the DOWN switch is pressed once when the transmission is in F3, the transmission shifts to F2.
  If the DOWN switch is pressed once when the transmission is in F2, the transmission shifts to F1.
- When the lever is operated rear (to set to REVERSE) from the N position, the transmission shifts to F1.
  If the UP switch is pressed once when the transmission is in R1, the transmission shifts to R2.
  If the UP switch is pressed once when the transmission is in R2, the transmission shifts to R3.
  If the DOWN switch is pressed once when the transmission is in R3, the transmission shifts to R2.
  If the DOWN switch is pressed once when the transmission is in R2, the transmission shifts to R1,

For details of the maximum speed at each speed range, see SPECIFICATIONS (5-2).

REMARK

The speed range in use is displayed on the panel display according to the gearshift operation.
For example:
Neutral: N is displayed on the display panel A (2)
FORWARD 2nd: F2 is displayed on the display panel A (2)
REVERSE 3rd: R3 is displayed on the display panel A (2)
When the parking lever is locked, P is displayed.

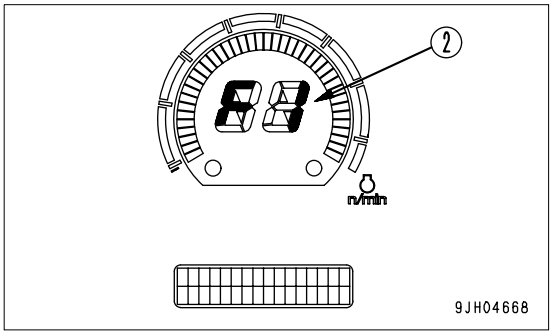

https://truckmanualshub.com/

GEARSHIFTING OPERATION USING PRESET MODE FUNCTION

- Shift mode selection means that the selected speed range is displayed at the N position before starting.
- This can be used when preset mode switch (3) is turned to the ON position.
- When the joystick is at the N position, if UP switch (a) or DOWN switch (b) is pressed, the shift mode selection can be carried out.

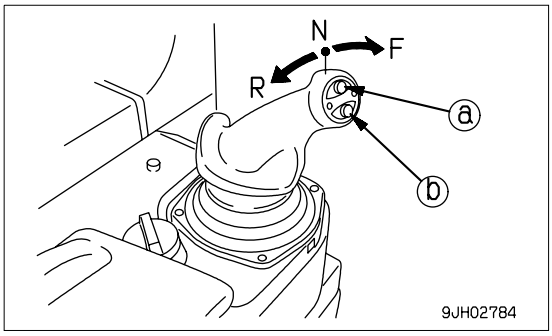

- F1-R1 mode
- F1-R2 mode
- F2-R2 mode

- The selected shift mode is displayed on display panel B (multi-information) of the monitor panel.

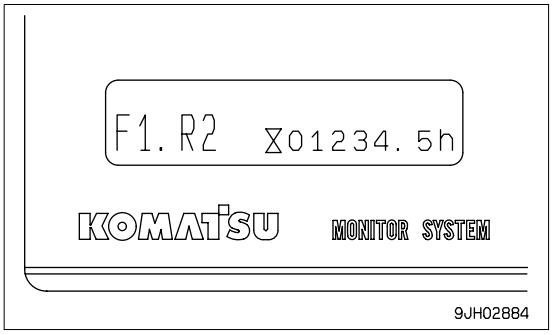

- Shift operation when [F1-R1] mode is set
  When the preset mode switch is turned ON, the [F1-R1] mode is set by default.
  After that, if the steering, directional, and speed lever is operated forward (forward travel operation), the transmission is shifted to F1.
  If it is operated back (reverse travel operation), the transmission is shifted to R1.

- Shift operation when [F1-R2] mode is set
  When the steering, directional, and speed lever is at the N position, if the up switch is pressed once, the mode is set to [F1-R2] mode. After that, if the steering, directional, and speed lever is operated forward (forward travel operation), the transmis-
  sion is shifted to F1. If it is operated back (reverse travel operation), the transmission is shifted to R2.

- Shift operation when [F2-R2] mode is set
  When the steering, directional, and speed lever is at the N position, if the up switch is pressed twice, the mode is set to [F2-R2] mode. After that, if the steering, directional, and speed lever is operated forward (forward travel operation), the trans-
  mission is shifted to F2. If it is operated back (reverse travel operation), the transmission is shifted to R2.

REMARK
Even when the mode is set to [F1-R1] mode, [F1-R2] mode, or [F2-R2] mode, it is possible to switch to the desired speed range simply by operating the up switch or down switch.
For example, when the mode is set to [F1-R2] mode, if the steering, directional, and speed lever is operated forward (forward travel operation), the transmission is shifted to F1, but if up switch (a) is pressed once with the lever pushed forward, the
transmission is shifted to F2; if it is pressed twice, the transmission is shifted to F3. If the down switch (b) is pressed once when the transmission is in F3, the transmission is shifted to F2; if it is pressed twice, the transmission is shifted to F1.
If the steering, directional, and speed lever is operated back (reverse travel operation), the transmission is shifted to R2, but if up switch (a) is pressed once with the lever pulled back, the transmission is shifted to R3; if down switch (b) is pressed
once, the transmission is shifted to R1.
However, the mode remains in the [F1-R2] mode. If the steering, directional, and speed lever is returned to the N position and operated forward again (forward travel operation), the transmission is shifted to F1. If it is operated back (reverse travel
operation), the transmission is shifted to R2.

REMARK
When the preset mode switch is turned ON, the [F1-R1] mode is set by default.

https://truckmanualshub.com/

AUTO SHIFT DOWN OPERATION

If the travel speed drops due to the load conditions when traveling, this function automatically shifts the transmission is to a lower speed range. This is actuated by turning auto shift down switch (4) on the instrument panel at the front of the operator's compartment to the (b) (ON) position .

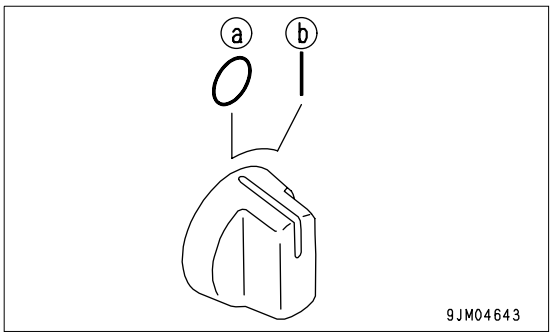

OFF position (a): Canceling function
ON position (b): Automatically shifted down to lower speed range

The transmission is automatically shifted down F2→ F1, F3 → F2, R2 → R1, R3 → R2.

REMARK

- **For safety reasons, during auto shift down, the transmission is prevented from shifting up.**

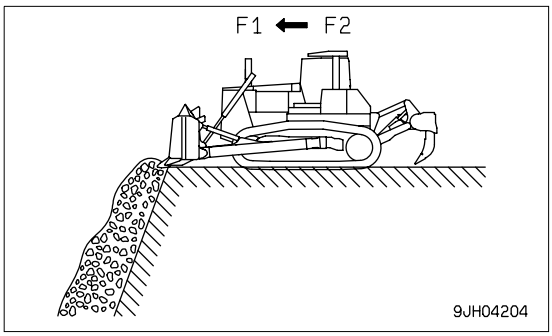

- If it is desired to shift up, use manual control and press the UP button on the steering, directional, and gearshift lever.

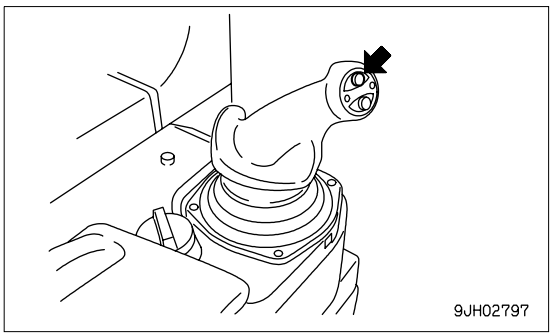

SHIFTING BETWEEN FOEWARD AND REVERSE

⚠ WARNING

When switching between FORWARD and REVERSE, check first that the direction of travel is safe.

⚠ CAUTION

There is no need to stop the machine even when switching between FORWARD and REVERSE.
To increase safety, operator comfort, and the life of the transmission, leave the engine running at full speed, and always depress the decelerator pedal to lower the engine speed.

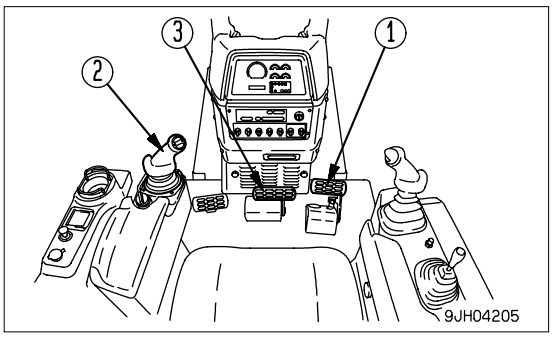

https://truckmanualshub.com/

1. Depress decelerator pedal (1) and reduce the engine speed.

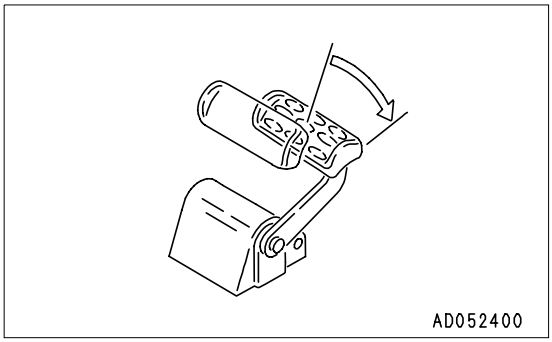

2. Return joystick (2) to the neutral position, reduce the speed, then depress brake pedal (3) and stop the machine.

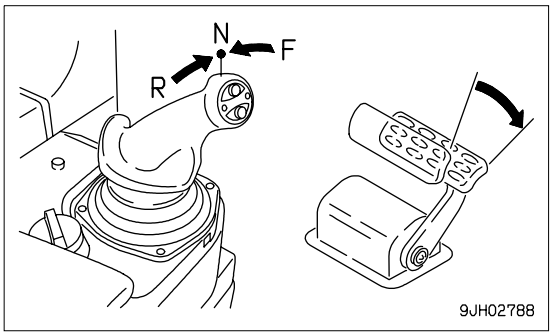

3. After depressing decelerator pedal (1), move joystick (2) to the desired position.

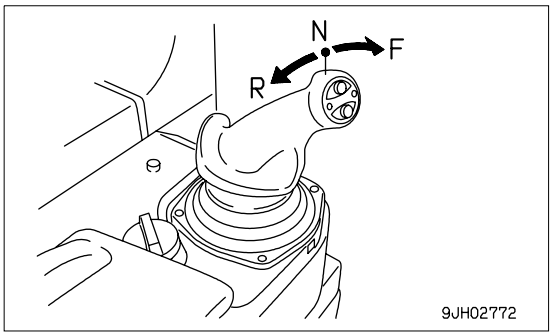

4. Release decelerator pedal (1) and raise the engine speed.

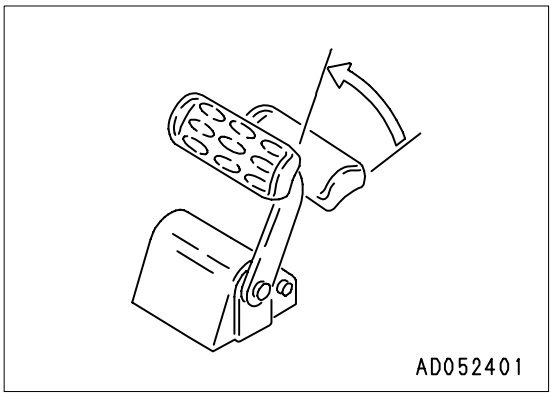

REMARK
When the joystick is placed in REVERSE, the backup alarm will sound.

https://truckmanualshub.com/

STEERING MACHINE

WARNING

- **Avoid as much as possible turning the machine on a slope.**
  The machine will tend to slip sideways. Particular care should be taken on soft or clay land.
- **Never make a pivot turn at high speed.**

NORMAL TURNING

To turn the machine while traveling, incline joystick (1) in the direction to turn.

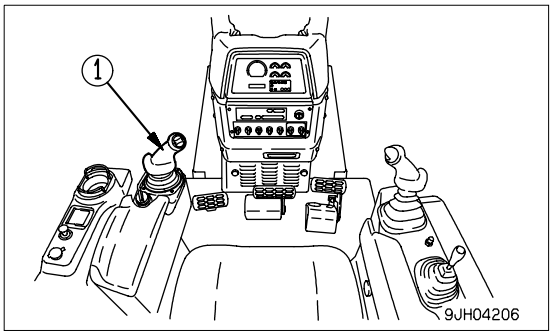

TURNING GRADUALLY TO LEFT WHILE TRAVELING FORWARD

If the joystick is pushed forward and moved partially to the left (L), the steering clutch is disengaged and the machine turns gradually to the left.

When turning gradually to the right, push the joystick forward, and move it partially to the right.
Do the same when traveling in reverse.

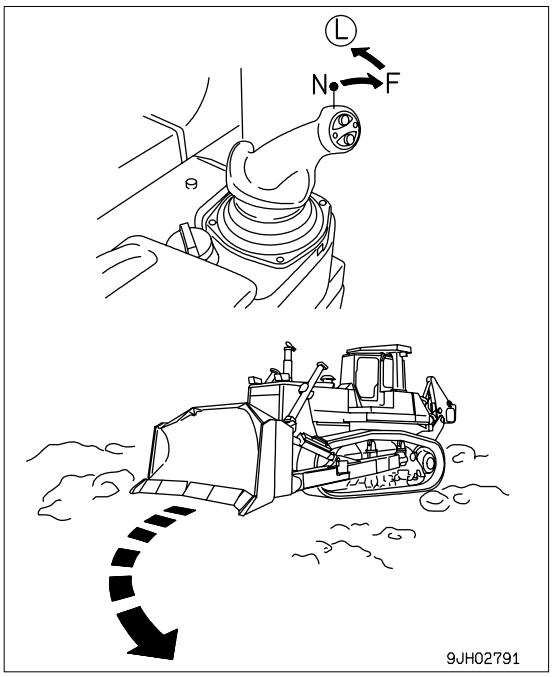

https://truckmanualshub.com/

COUNTERROTATION TURNS TO LEFT WHEN TRAVELING FORWARD

NOTICE
When carrying out a counterrotation turn, if the load is not equal on the left and right sides, the machine may carry out a pivot turn, so check the ground conditions and be careful not to hit any obstacles.

With joystick (1) at the N position, operate the lever partially to the left (L). The left and right tracks will rotate in opposite directions, and the machine will make a slow counterrotation turn. If the lever is operated further, the speed of the counterrotation turn will increase.

REMARK
When making a right counterrotation turn, operate the joystick (1) to the right (R) in the same way.

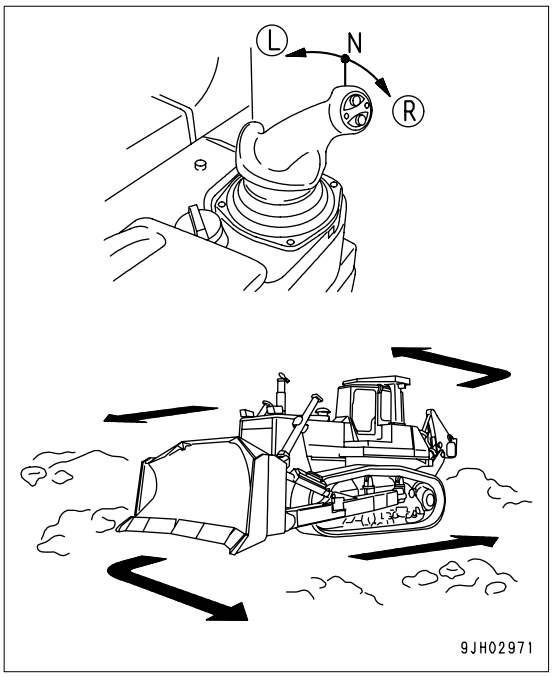

TURNING WHILE DESCENDING A SLOPE

TURNING GRADUALLY TO LEFT WHILE TRAVELING FORWARD

If the joystick (1) is pushed forward and moved partially to the left (L), the machine turns gradually to the left.

REMARK
When making gradual turns to the right, push the joystick (1) forward, and move it partially to the right.
Do the same when traveling in reverse.

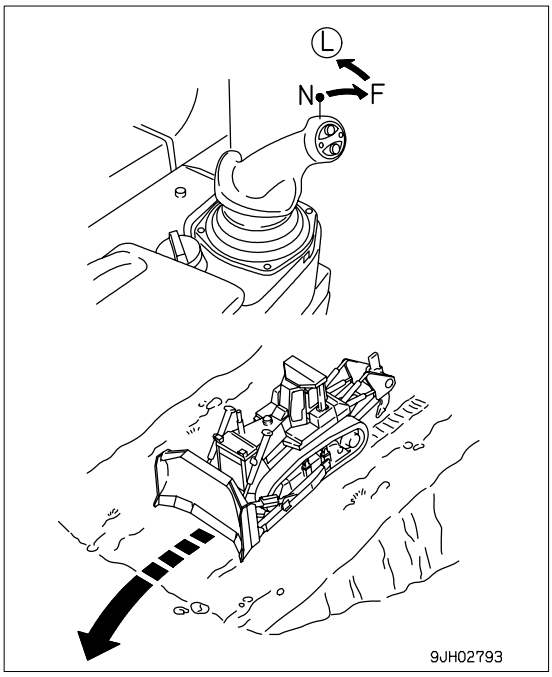

https://truckmanualshub.com/

PRECAUTIONS FOR OPERATION

PAY ATTENTION TO GAUGES

When the red range lights on the power train oil temperature gauge while operating, reduce load and wait for lowering of temperature.

PERMISSIBLE WATER DEPTH

When operating in water, always keep top surface of the track frame above the surface of the water.
Also, be careful that the engine cooling fan will not come in contact with water. The fan can be damaged.

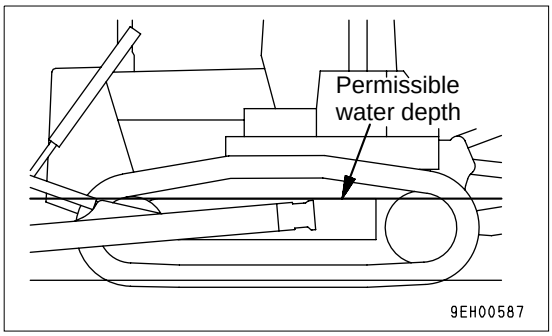

PRECAUTIONS WHEN TRAVELING UP OR DOWN HILLS

METHOD OF USING DECELERATOR PEDAL

When stepping on the decelerator pedal while going uphill, climbing ability will be reduced and the machine will stop.
Furthermore, the engine sometimes will stall.

USE ENGINE AS BRAKE

When going downhill, shift gear shift lever into low speed to run engine at slow speed and travel down slope using the engine as a brake.
Do not move the joystick to the N position.
When traveling down hills of more than 15°, shift down to 1st speed (R1 or F2).

BRAKING WHEN TRAVELING DOWNHILL

While descending a slope using the engine as a brake, also apply the brakes.
Failure to brake may result in overrunning, causing engine trouble.

PRECAUTIONS ON SLOPE

BE CAREFUL OF FUEL LEVEL

If the fuel level in the fuel tank becomes low when working on slopes, the engine may suck in air because of the angle of the machine or the swaying of the machine. If this makes the engine stop, the braking effect will be reduced, so be careful not to let the fuel level in the fuel tank become too low.

BE CAREFUL OF OIL LEVEL

When operating machine on sloped areas of more than 20°, fill every place with oil to H level.

PRECAUTIONS WHEN ENGINE STOPS ON SLOPE

If the engine stops while working or traveling on a hill, immediately depress the brake pedal to bring the machine to a complete stop.

METHOD OF USING BRAKES

The following actions cause premature damage to the brakes, so avoid such operations.

- Using emergency brake at full speed
- Using brake with engine running at full speed in first gear (F1, R1) (Machine stall condition)

REMARK
Always depress the decelerator pedal to lower the engine speed before actuating the brakes.

https://truckmanualshub.com/

PROHIBITED TO KEEP THE DOOR OPEN DURING OPERATIONS

Always keep the door closed when traveling or carrying out operations.
If the door is open, there is danger of damage from obstacles or strong vibration.

IT IS PROHIBITED TO MODIFY THE CAB GLASS IN ANY WAY THAT WILL OBSTRUCT THE VIEW

- For safety reasons, do not install anything to the cab glass that will obstruct the view.
- Always keep the glass clean to ensure safety during operations.

PRECAUTIONS FOR BLIND SPOTS CAUSED BY CAB STAY AND ROPS STAY

WARNING

The cab stay and ROPS stay cause blind spots.
When operating, always be sure to check carefully that there is no obstacle or worker in the surrounding area.

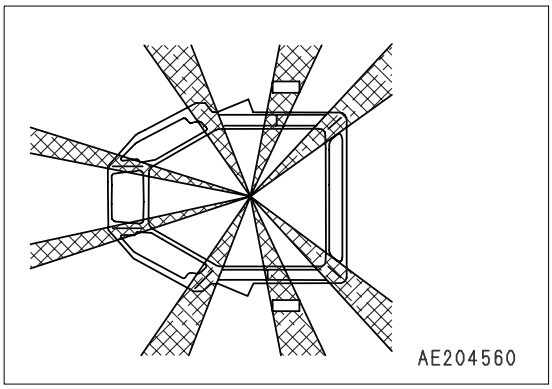

PARKING MACHINE

WARNING

- **Avoid stopping suddenly. Give yourself ample room when stopping.**
- **When stopping the machine, select flat hard ground and avoid dangerous places. If it is unavoidably necessary to park the machine on a slope, place the parking lever (4) in the LOCK position and insert blocks underneath the track shoes. As an additional safety measure, thrust the blade into the ground.**
- **If the work equipment control lever is touched by accident, the work equipment may move suddenly, and this may lead to a serious accident. Before leaving the operator's seat, always operate the safety lever (7) to place it securely at the LOCK position.**

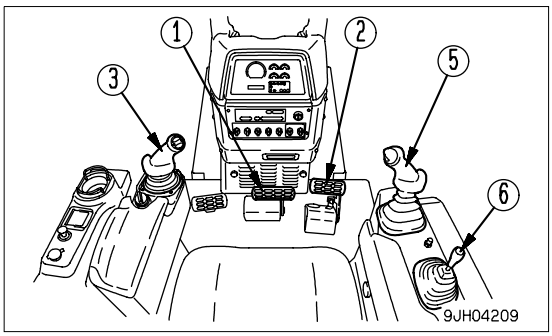

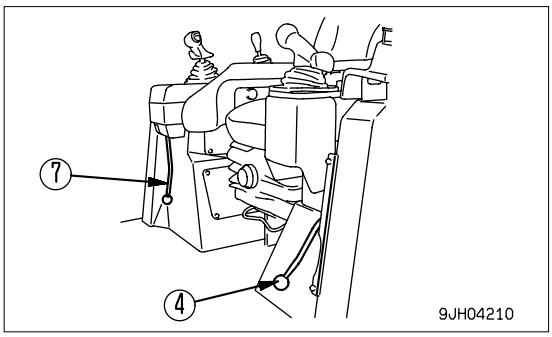

https://truckmanualshub.com/

1. Depress brake pedal (1) to stop the machine.

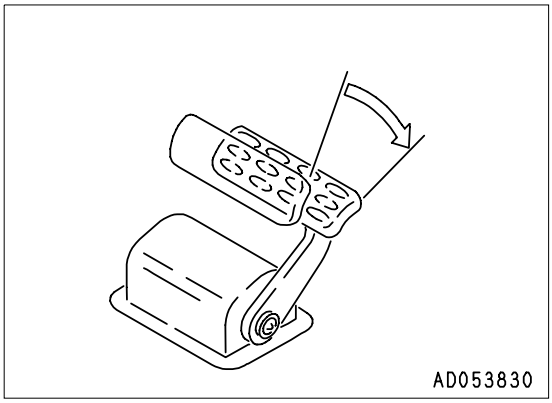

NOTICE
If the brake is depressed when the engine speed or travel speed is high, the brake disc may make a slipping sound. Normally, depress decelerator pedal (2) to reduce the engine speed and travel speed before depressing the brake.

2. Place joystick (3) at the neutral position and set the speed range to 1st.

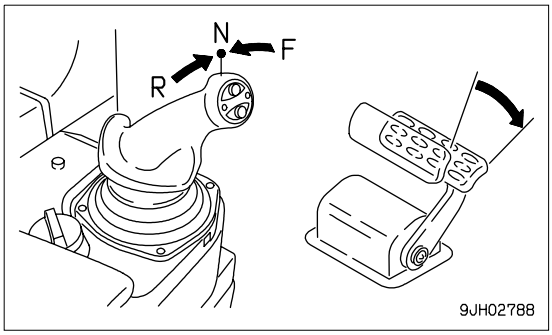

3. Operate parking lever (4) to lock the brakes.

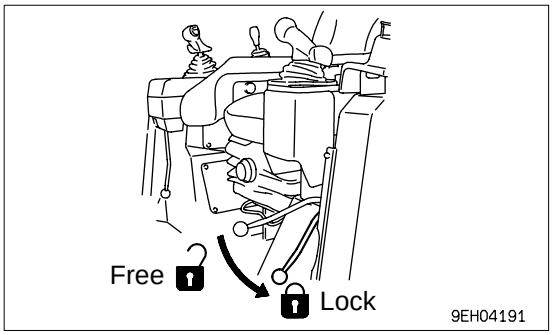

4. Operate blade control lever (5) and ripper control lever (6) to the LOWER position, and lower the blade and ripper to the ground.
5. Set blade control lever (5) and ripper control lever (6) to the HOLD position.

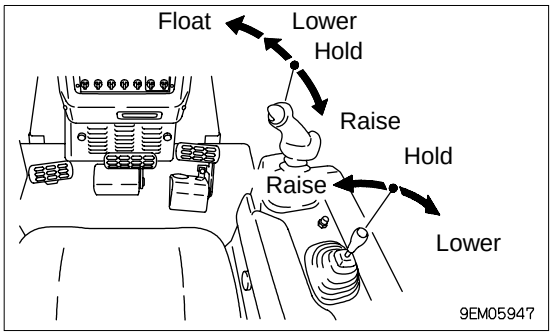

6. Set safety lever (7) for blade control lever (5) and ripper control lever (6) to the FREE position.

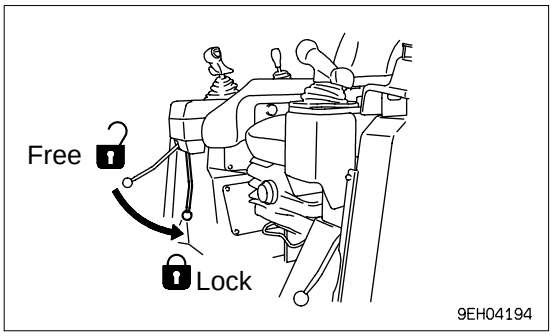

https://truckmanualshub.com/

CHECK AFTER FINISHING WORK

Use the meters and caution lamps to check the engine water temperature, engine oil pressure, fuel level and power train oil temperature.

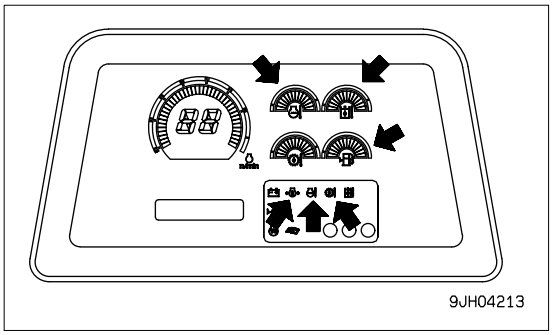

LOCKING

To prevent vandalism, there are locks at the following places. Places that can be locked with the starting switch key.

- Right and left engine side cover (1)
  (left side: 2 places, right side: 2 places)
- Cab door opener (3)
- Cap with lock (4)
  - Radiator cap (if equipped)
  - Fuel tank cap (if equipped)
  - Hydraulic oil tank cap
- Battery inspection cover(2)
- Rear cover (5)

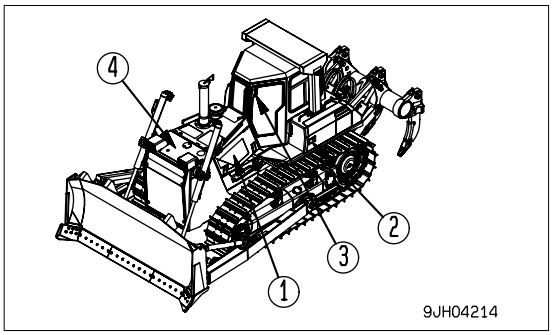

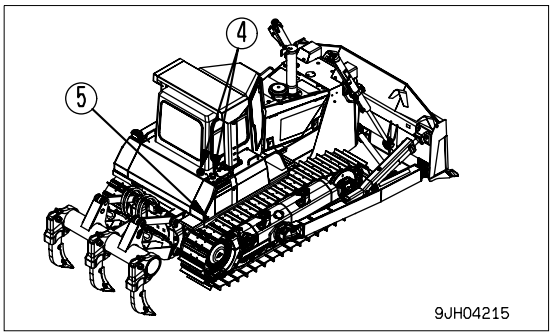

https://truckmanualshub.com/

WORK POSSIBLE USING BULLDOZER

In addition to the following, it is possible to further increase the range of applications by using various attachments.

DOZING

A bulldozer digs and transports dirt in a forward direction slope excavation can always be most effectively carried out by proceeding from the top downward.
With the dual tiltdozer, the angle of the blade cutting edge can be changed, so the angle of the cutting edge can be adjusted during the digging operation to improve the efficiency of the work.

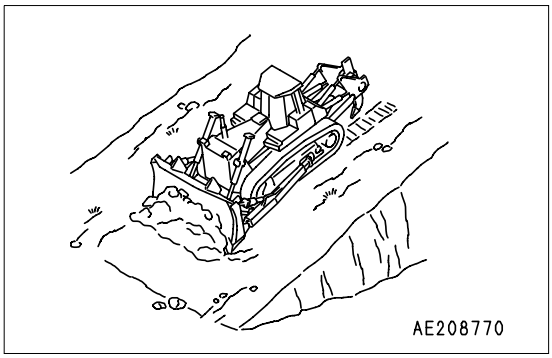

CUTTING INTO HARD OR FROZEN GROUND OR DITCHING

For digging and ditch excavation of hard or frozen ground tilt the blade. Even hard ground can be dug effectively by a tilted or angled blade.
If the ground is harder, use a ripper attachment for better efficiency.

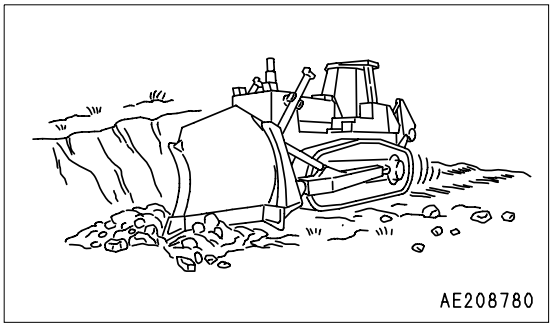

FELLING TREES, REMOVING STUMPS

NOTICE
Do not up root trees or stumps or fell trees by angling or tilting the blade.

For trees with a diameter of 10 to 30 cm, raise the blade high and push 2 or 3 times to fell the tree.
Next, travel in reverse, and dig the corner of the blade into the ground to cut and dig up the roots.
When doing this, never hit the tree at high speed or apply shock to fell the tree.

PUSHER OPERATIONS

- When carrying out pusher operations, always install a pusher plate.
- When approaching the other machine, depress the decelerator pedal to reduce the engine speed and approach slowly. After coming into contact, raise the travel speed slowly and push with full power.

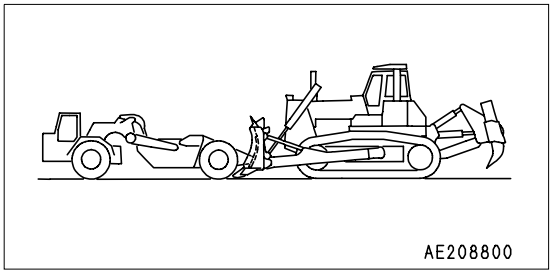

https://truckmanualshub.com/

SMOOTHING

NOTICE
Avoid smoothing on rocky or stony ground. It can damage the blade.

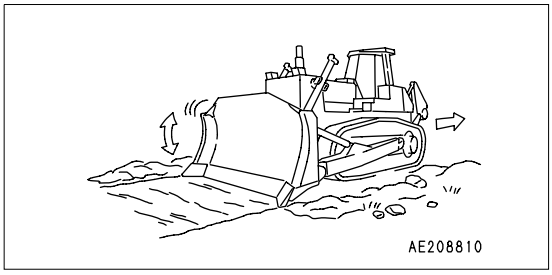

When finishing the ground surface to a smooth finish after digging or filling operations, keep a full load of soil in the blade and operate the blade up or down in small movements while traveling forward. When leveling windrows or ruts left by the tracks, set the blade to the FLOAT position, travel at low speed in reverse and drag the blade over the ground surface.

https://truckmanualshub.com/

ADJUSTING POSTURE OF WORK EQUIPMENT

WARNING

When adjusting, it is dangerous if the work equipment is moved by mistake. Set the work equipment in a safe condition, then stop the engine and lock the work equipment securely with the safety lock.

BLADE ADJUSTMENT

TILTING THE TILTDOZER

NOTICE

The maximum tilt is 735 mm for the EX specification machine and 500 mm for the PX specification machine.

When tilting, make sure that it does not exceed 735 mm for the EX specification machine or 500 mm for the PX specification machine.

If the maximum tilt is exceeded, excessive force will be brought to bear on all parts, and this will damage the machine.

If the blade control lever is operated, the following tilt amount can be obtained.
Right side: 410 mm or more
Left side: 410 mm or more
If more tilt is required, do as follows.
Use bar handle (2) installed to the left brace to turn brace (1) and change length (L) of the brace. This makes it possible to obtain a maximum tilt of 735 mm for the EX specification machine and 500 mm for the PX specification machine.

- Standard distance between joints (L): 1287 mm

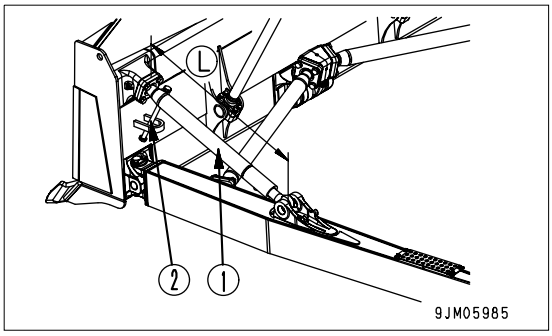

ADJUSTING SHIM IN BLADE CYLINDER CAP

Set the standard shim adjustment in the blade cylinder cap to 4 mm.
Remove shims to balance the wear of the cap and the ball at the end of the piston rod.
The proper clearance to be maintained with the shims is 0.2 to 0.5 mm.

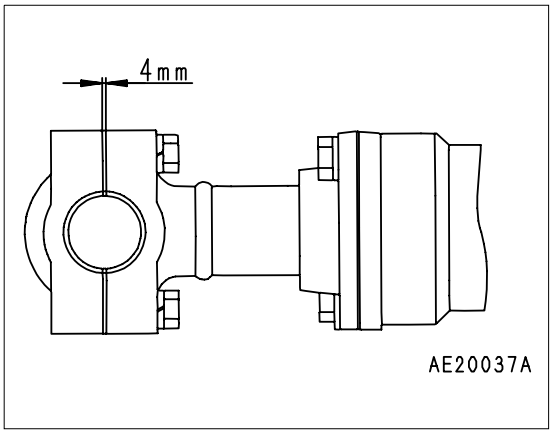

https://truckmanualshub.com/

ADJUSTING DIGGING ANGLE

(PX Specifications)

It is possible to change the digging angle (A) of the blade by removing cap (1) and bolt (2) installed between the blade and tilt cylinder or brace (3), or replacing with optional parts.

This is extremely effective in improving the earth rolling function of the blade on soft ground without using the tilt cylinder to change the left and right tilt.

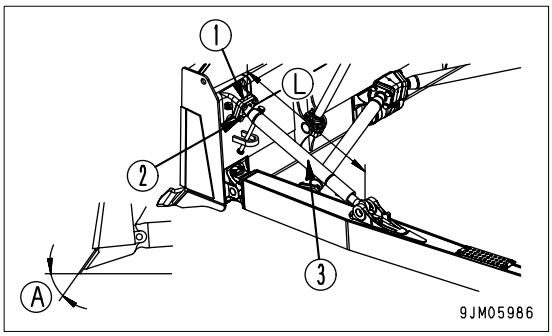

1. When replacing with optional cap (1) and bolts (2)
   Digging angle (A): 55° -> 52.5°
   Part numbers for replacement parts
   - Cap (1): 154-929-3210 (2 caps/machine)
     - Bolt (2): 01011-82420 (8 bolts/machine)

2. When removing cap (1) installed to standard machine
   Digging angle (A): 55° -> 50.5°
   Prepare the following parts for bolts (2) and replace.
   - Bolt (2): 01010-82490 (8 bolts/machine)

REMARK

It is possible to change digging angle (A) of the blade by a range of ±5° by changing the length (L) of the brace and tilt cylinder.

However, the more the digging angle is changed, the more the change becomes in the amount of tilt on the left and right sides provided by the tilt cylinder.

ADJUSTING BRACE

⚠ WARNING

If maintenance is carried out with the engine running, always have one worker sitting in the operator's seat while another worker carries out the maintenance. Both workers must mutually confirm the safety during the operation.

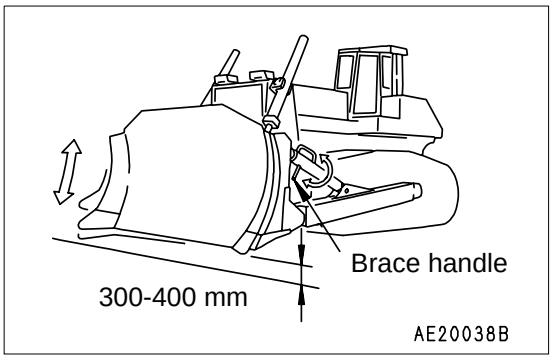

Start the engine and use inching control to tilt to the left and right. Adjustment can be carried out easily by rotating the brace handle while raising and lowering.

- When extending the brace

It is easy to carry out the adjustment if the blade is set on top of a block and the brace handle is turned.

https://truckmanualshub.com/

REMARK
When operated in this way, the blade is tilted, so the handle gradually becomes heavier. When this happens, return the blade from the tilt position to the horizontal position and turn the handle again according to the procedure given above.

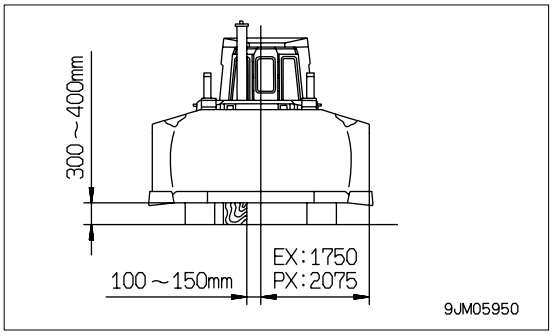

SHIM ADJUSTMENT

Adjust the thickness of shim so that the ball joint play (4 points) in the axial direction (shown by the arrow) does not exceed 1 mm.

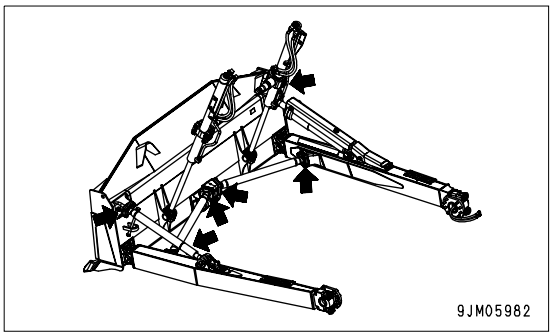

1. Remove shim (1) and tighten bolts (2) to eliminate the ball joint play.
2. Measure clearance “A“ and remove bolts (2).
3. Adjust the thickness of shim (1) to A + 0.5-1 mm, then tighten bolt (2)..
4. Confirm that ball joint can move smoothly after tightening bolts.

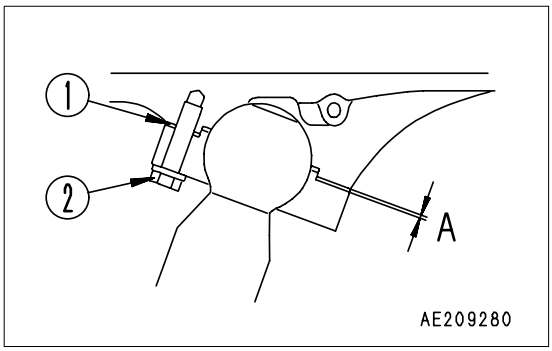

ADJUSTING RIPPER

ADJUSTING DIGGING DEPTH

Mounting pin holes are provided in the shank and these are used according to the desired digging depth. For normal use, use the bottom hole, and when particularly deep digging is needed, use the top hole.

1. Place a pointed object on the tip of pin (1), then hit with a hammer to remove from the opposite side.
2. Remove pin (2) and change the position of the shank hole.
3. Insert pin (1) partially by hand then knock it in with a hammer.
   - The pin is made of one piece, so insert it partially by hand then knock it in with a hammer.

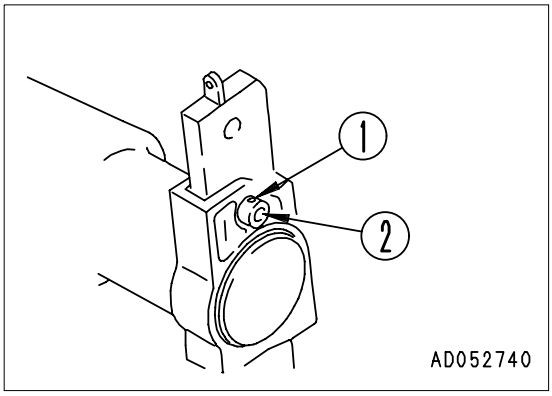

https://truckmanualshub.com/

REPLACING POINT AND PROTECTOR

To protect the shank, if the protector and point installed to the tip are worn, replace them.
Place a pin remover on the pin marked by the arrow, then hit with a hammer to remove from the opposite side.

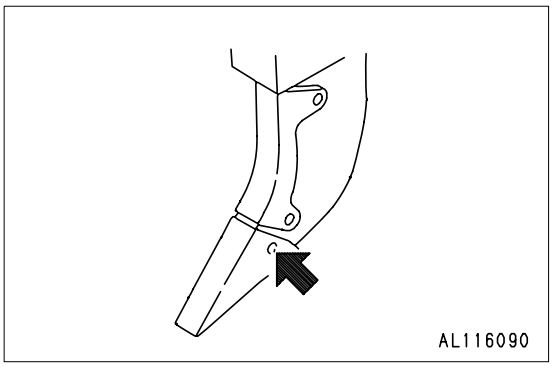

REMARK
The pin is a unitized type, so insert the pin partially by hand, then knock it in fully with a hammer.

https://truckmanualshub.com/

TIPS FOR LONGER UNDERCARRIAGE LIFE

Undercarriage life greatly varies depending on operation method, inspection and maintenance. For most efficient operation, keep the following point in mind.

OPERATION METHOD

- Select the track shoe that best suits the type of soil to be encountered in service.
  Please consult your Komatsu distributor When selecting track shoes.
- Do not allow shoe slipping to occur during operation. If shoe slipping occurs, reduce load to the blade until slipping stops.
- Avoid sudden starts, acceleration or stops, unnecessarily high speeds and sharp turns.
- Always operate machine in a straight line whenever possible. When making turns, be careful not to allow the machine to stay to one side, so operation in both turning directions can be done properly. Make turns with the largest possible radius.
- Prior to operation, clear boulders and obstacles to prevent machine from riding over them while operating.
- On a slope, operate the machine parallel to the inclination of the slope. Do not operate across the slope. Also when stopping the machine on a slope, the machine should face toward the top of the slope.
- When ground inclines to left or right during digging operation, do not continue to dig with machine inclined. Move machine back to level ground and start to dig again.
- Do not force the machine to carry out work that exceeds its working capability. Such work includes cases where the idler or sprocket come off the ground when the machine meets obstacles that resist the power of the machine during dozing or ripping operations.

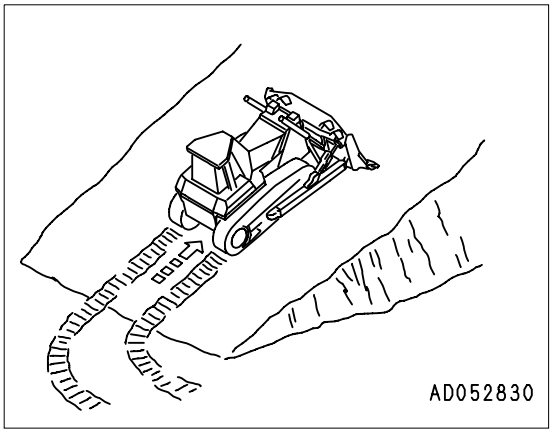

INSPECTION AND ADJUSTING

- Properly adjust track tension.
  Tension should be measured at clearance (A) shown in the diagram - usually 20 to 30 mm at this point. For rocky terrain, tighten tracks slightly. In clay or sandy areas, slightly loosen them. (For inspection and adjustment procedures, refer to “CHECK TRACK TENSION (4-24)“).
- Check idler rollers for oil leakage as well as for loose bolts and nuts. If any trouble is detected, repair immediately.

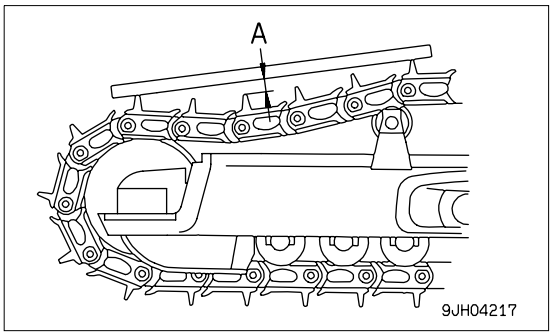

- Check the clearance between the idler guide plate and the track frame. If clearance (B) increases, idler may develop side motion and tracks may come off. (For inspection and adjustment procedures, refer to “ADJUST IDLER CLEARANCE (4-26)“.

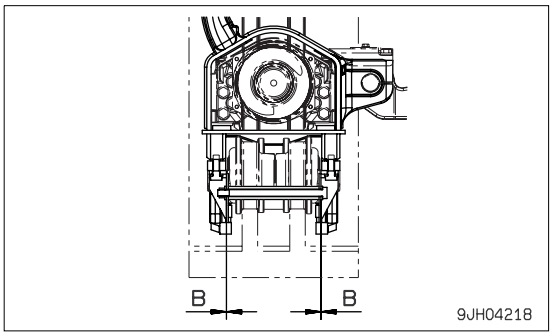

https://truckmanualshub.com/

INSPECTION AND REPAIR

Frequent inspection and prompt repair will reduce repair costs.
The following items for inspection will serve as a guide to maintenance service of each undercarriage part. Perform periodical inspection and contact the Komatsu distributor in your area when machine has approached repairable limits and reversing limits.

MEASURING HEIGHT OF GROUSER

- After taking up slack in track shoes, measure height at center of shoe as shown below.

Standard height (h): 72 mm
Repair limits: 25 mm

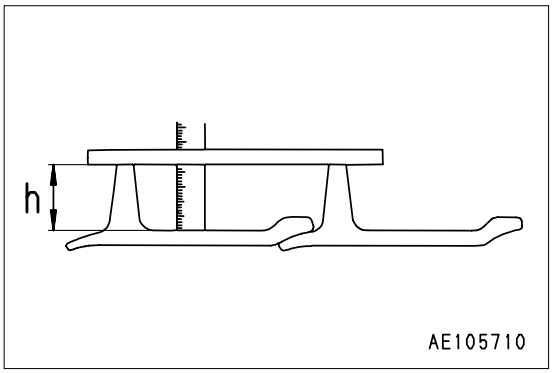

MEASURING OUTSIDE DIAMETER OF TRACK ROLLER

1. Measure height (size C) of link tread as shown.
2. Stop machine at position where link tread, whose size C has been measured completely, contacts roller tread. Then measure size B.
3. Calculate outside diameter of tread (size A)
   A =(B-C) x 2

Standard size (A): 222 mm (Single roller)
Repair limits: 182 mm (Double roller)
182 mm

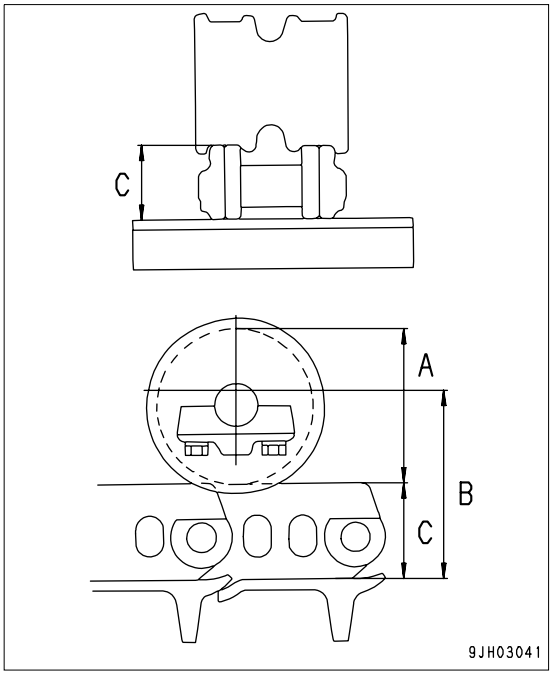

https://truckmanualshub.com/

TRANSPORTATION

When transporting the machine, observe all related laws and regulations, and be careful to assure safety.

TRANSPORTATION PROCEDURE

A trailer should be used for transporting the machine.

LOADING, UNLOADING WORK

WARNING

- **Make sure the ramp has sufficient width, length and thickness to enable the machine to be safely loaded and unloaded.**
- **If the ramp sags appreciably, reinforce it with blocks, etc.**
- **When loading and unloading the machine, park the trailer on a flat firm roadbed. Keep a fairly long distance between the road shoulder and the machine.**
- **Remove the mud from the undercarriage to prevent the machine from slipping to the side on slopes.**
- **Be sure the ramp surface is clean and free of grease, oil, ice and loose materials.**
- **Never change the direction of travel when on the ramps. If it is necessary to change direction, drive off the ramps and correct the direction, then drive on to the ramps again.**

When loading or unloading, always use ramps or a platform and carry out the operations as follows.

1. Properly apply the brakes on the trailer and insert blocks beneath the tires to ensure that it does not move. Then fix the ramps in line with the centers of the trailer and the machine.
2. Set the machine in line with the ramps, then load or unload the machine at slow travel.
3. Load the machine correctly in the specified position on the trailer.

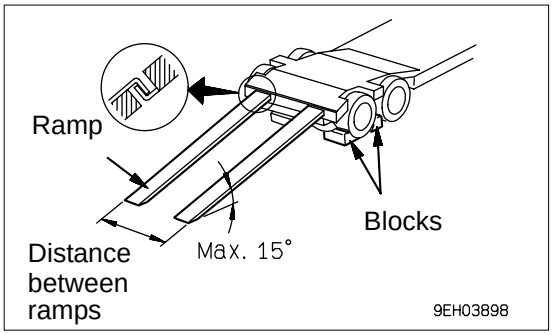

PRECAUTIONS FOR LOADING

After placing the machine on the specified position of the trailer, secure it according to the following procedure.

1. Lower the work equipment slowly.
2. Lock each control lever with the safety lock lever securely.
3. Set the parking lever to the LOCK position.
4. Turn the starting switch to the OFF position, stop the engine, then remove the key.
5. Lock the cab door, left and right engine side covers, and the battery inspection cover.
6. Put blocks under both ends of the tracks to prevent the machine from moving during transportation, and tie the machine down securely with chains or wire rope of suitable strength.
   Be particularly careful to fix the machine in position securely so that it does not slip to the side.

https://truckmanualshub.com/

METHOD OF LIFTING MACHINE

WARNING

- **Never carry out the lifting operation with any person on the machine.**
- **Always make sure that the wire rope used for lifting the machine is of ample strength for the weight of the machine.**
- **Never try to lift the machine in any posture other than the posture given in the procedure below.**
- **There is danger that the machine may lose its balance.**
- **When lifting the machine,pay careful attention to the center of gravity to maintain the balance.**

When lifting the machine, carry out the operation on flat ground as follows.

1. Stop the engine and be sure to set the parking lever to the LOCK position.
2. Set the lifting position for the machine as shown in the diagram on the right.

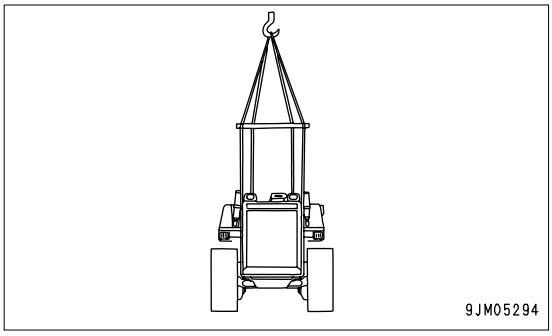

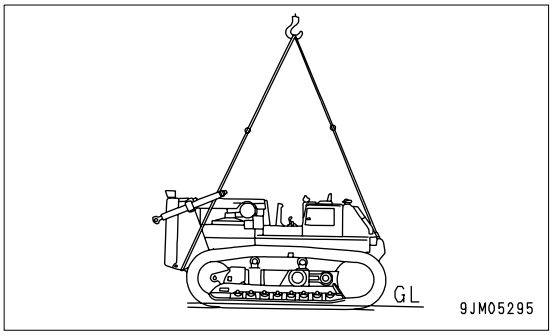

NOTICE

The lifting procedure applies to machines with standard specifications.

The method of lifting differs according to the attachments and options actually installed. In such cases, please contact your Komatsu distributor for information.

For details of the weight, see “SPECIFICATIONS (5-2)“.

https://truckmanualshub.com/

PRECAUTIONS FOR TRANSPORTATION

⚠ WARNING

Determine the route for transporting the machine by taking into account the width, height and weight of the machine.

Obey all state and local laws governing the weight, width and length of a load. Observe all regulations governing wide loads.

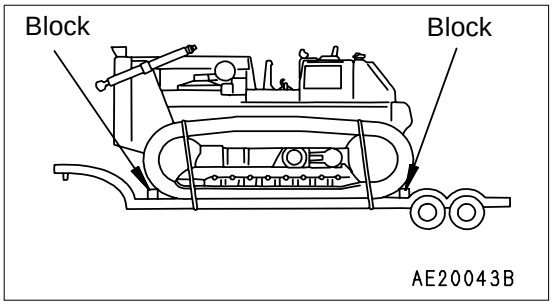

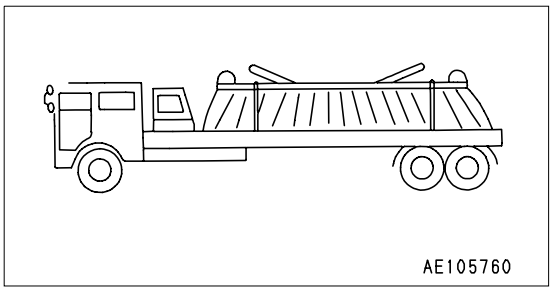

TRAVELING ON ROADS

- When travelling paved roads, use flat shoes to protect their surface.
  Even when travelling a short distance, always place boards to protect the road surface.

REMARK
Note that the asphalt road becomes soft in summer.

REMOVAL OF CAB

(Machines equipped with cab)
If it is necessary to remove the cab for transportation, disconnect the washer hoses, cab wiring, and washer motor wiring before removing the cab.

1. Pull the grommet portion in towards the cab from the hole in the machine cover, then remove.
2. Disconnect 4 washer hoses and the wiring (single wires x 2, 4-pin plug x 1) from the socket.
   - After removing, cover the washer hoses with a vinyl bag to prevent any dirt or dust from entering.
   - Before removing the cab, measure the clearance between the cab and each lever (joystick and blade control lever, etc.). Note the measurements to use as a standard when installing the cab again.

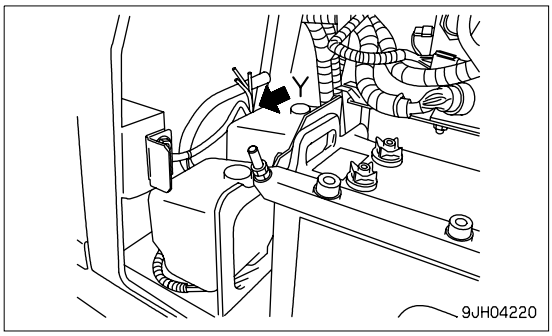

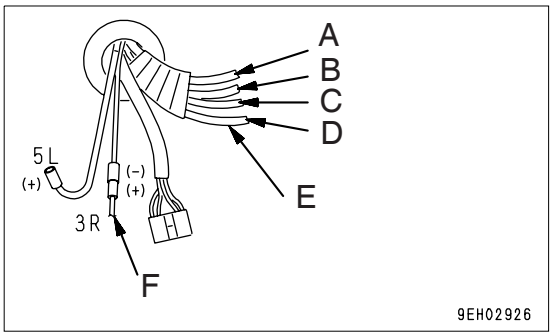

A	Red - right door
B	Blue - left door
C	Black - rear window
D	Colorless - front window
E	Washer tube
F	From fuse box. Red (Back up power source)

https://truckmanualshub.com/

INSTALLATION OF CAB

(Machines equipped with cab)
Install the cab parts in the opposite order to removal.
Connect all parts that were disconnected.
Install the cab mounting bolts as follows.

1. Lower the cab slowly on top of the floor frame.
2. Align the cab with the floor frame, then install bolts and washers in holes (A) - (U).
   Do not screw the bolts in fully. Screw them in 3 or 4 turns.
3. Tighten the bolts in holes (N) - (U) fully.
   Tighten in the order (N), (U), (Q), (R), (O), (T), (P), (S).
4. Tighten the bolts, (A) to (M), completely.

   If there are any unclear points about removing or installing the cab, please contact your Komatsu distributor.

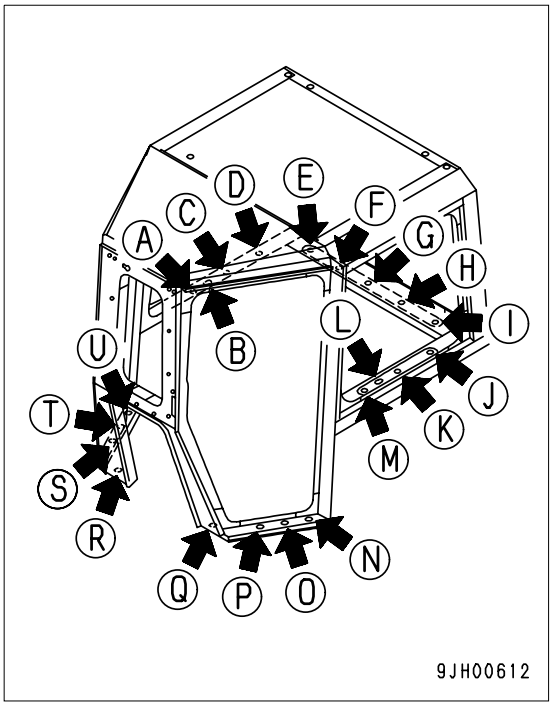

INSTALLATION OF ROPS

Tighten the bolts securely to the following tightening torque.

- All 12 bolts : 824 - 1030 N·m (84 - 105 kgf·m)

https://truckmanualshub.com/

COLD WEATHER OPERATION

PRECAUTIONS FOR LOW TEMPERATURE

If the temperature becomes low, it becomes difficult to start the engine, and the coolant may freeze, so do as follows.

FUEL AND LUBRICANTS

- Change to oil with low viscosity for all components. For details of the specified visicosity, see “USE OF FUEL, COOLANT AND LUBRICANTS ACCORDING TO AMBIENT TEMPERATURE (4-9)“.

COOLANT

⚠ WARNING

- **Antifreeze is toxic. Be careful not to get it into your eyes or on your skin. If it should get into your eyes or on your skin, wash it off with large amount of fresh water and see a doctor at once.**
- **When changing the coolant or when handling coolant containing antifreeze that has been drained when repairing the radiator, please contact your Komatsu distributor. Antifreeze is toxic, so do not let it flow into drainage ditches or spray it on to the ground surface.**
- **Antifreeze is flammable, so do not bring any flame close. Do not smoke when handling antifreeze.**

NOTICE

- **Never use methanol, ethanol or propanol based antifreeze.**
- **Avoid using any leak-preventing agent, regardless if it is sold separately or in antifreeze.**
- **Do not mix one antifreeze with a different brand.**

For details of the antifreeze mixture when changing the coolant, see “CLEAN INSIDE OF COOLING SYSTEM (4-19)“.
Use a Permanent Antifreeze (ethylene glycol mixed with corrosion inhibitor, antifoam agent, etc.) meeting the standard requirements as shown below. With permanent antifreeze, no change of coolant is required for a year. If it is doubtful that an available antifreeze meets the standard requirements, ask the supplier of that antifreeze for information.
Standard requirements for permanent antifreeze

- SAE J1034
- FEDERAL STANDARD O-A-548D

REMARK

In areas where permanent antifreeze is not available, it is possible to use antifreeze whose main component is ethylene glycol and does not contain any corrosion inhibitor. (Such antifreeze can be used for the winter season only.) However, in such a case, the cooling water must be changed twice a year (spring and fall), so use permanent antifreeze when possible.

BATTERY

⚠ WARNING

- **The battery generates flammable gas, so do not bring fire or sparks near the battery.**
- **Battery electrolyte is dangerous. If it gets in your eyes or on your skin, wash it off with a large amount of water and consult a doctor.**
- **Battery electrolyte dissolves paint. If it gets on to the bodywork, wash it off immediately with water.**
- **If the battery electrolyte is frozen, do not charge the battery or start the engine with a different power source. There is danger that the battery may explode.**
- **Battery electrolyte is toxic, so do not let it flow into drainage ditches or spray it on to the ground surface.**

https://truckmanualshub.com/

When the ambient temperature drops, the capacity of the battery will also drop. If the battery charge ratio is low, the battery electrolyte may freeze. Maintain the battery charge as close as possible to 100%, and insulate it against cold temperature so that the machine can be started easily the next morning.
Measure the specific gravity and calculate the rate of charge from the following conversion table.

	Electrolyte Temperature (°C)			
Charging Rate (%)	20	0	-10	-20
100	1.28	1.29	1.30	1.31
90	1.26	1.27	1.28	1.29
80	1.24	1.25	1.26	1.27
75	1.23	1.24	1.25	1.26

REMARK
When adding distilled water in cold weather, add it before starting operations in the morning to prevent the electrolyte from freezing.

AFTER COMPLETION OF WORK

⚠ WARNING

Raising the track and rotating it in order to remove dirt from the undercarriage involves danger, so do not come close to the track when it is rotating.

To prevent mud, water, or the undercarriage from freezing and making it impossible for the machine to move on the following morning, always observe the following precautions.

- Mud and water on the machine body should be completely removed. This is to prevent damage to the seal caused by mud or dirt getting inside the seal with frozen drops of water.
- Park the machine on concrete or hard ground. If this is impossible, park the machine on wooden boards.
- Open the drain valve and drain any water collected in the fuel system to prevent it from freezing.
- When operating in mud or water, remove the water from the undercarriage to extend the life of the undercarriage.
- As the battery capacity drops markedly in low temperatures, cover the battery or remove it from the machine, keep it in a warm place, and install it again the next morning.

AFTER COLD WEATHER

When season changes and the weather becomes warmer, do as follows.

- Replace the fuel and oil for all parts with oil of the viscosity specified.
  For details, see “USE OF FUEL, COOLANT AND LUBRICANTS ACCORDING TO AMBIENT TEMPERATURE (4-9)“.
- If for any reason permanent antifreeze cannot be used, and an ethyl glycol base antifreeze (winter, one season type) is used instead, or if no antifreeze is used, drain the cooling system completely, then clean out the inside of the cooling system thoroughly, and fill with fresh soft water.
- When it is unnecessary to use the automatic starting aid (APS) (When the ambient temperature is above 15°C), Always keep the fuel valve closed.

https://truckmanualshub.com/

LONG-TERM STORAGE

BEFORE STORAGE

When putting the machine in storage for more than one month, do as follows.

- After every part is washed and dried, the machine shall be housed in a dry building. In case it is unavoidable to leave it outdoors, park the machine on flat ground free from flooding or other disaster and cover it with canvas etc.
- Completely fill the fuel tank, lubricate and change the oil before storage.
- Apply a thin coat of grease to metal surface of the hydraulic piston rods and the idler adjusting rods.
- Disconnect the negative terminals of the battery and cover it, or remove it from the machine and store it separately.
- Komatsu genuine Super Coolant (AF-ACL) is added to the cooling water, so there is no need to change the density for temperatures down to -10°C.
  If the temperature goes below -10°C, adjust the density. For details, see “CLEAN INSIDE OF COOLING SYSTEM (4-19)“.
- Place all control levers at the neutral position, set the safety lever and parking brake lever to the LOCK position, and set the fuel control lever to the low idling position.

DURING STORAGE

WARNING

If it is unavoidably necessary to carry out the rust-preventive operation while the machine is indoors, open the doors and windows to improve ventilation and prevent gas poisoning.

Operate the engine and move the machine for a short distance once a month so that a new film of oil will be coated over movable parts and component surfaces. At the same time, also charge the battery.
Before operating the work equipment, wipe off the grease on the hydraulic piston rod.

AFTER STORAGE

NOTICE
If the machine is to be used when the monthly rust prevention operation has not been carried out, please contact your Komatsu distributor.

When using the machine after long-term storage, do as follows before using it.

- Wipe off the grease from the hydraulic cylinder rods.
- Add oil and grease to all places.
- When a machine is stored for a long period, moisture in the air will get into the oil. Check the oil before and after starting the engine. If there is water in the oil, change the oil.

https://truckmanualshub.com/

TROUBLESHOOTING

AFTER RUNNING OUT OF FUEL

WARNING

When air bleed plug (2) at the top of the fuel filter head or supply pump air breather (4) are removed, the system is still under pressure, so fuel may spurt out. Loosen these parts slowly before opening them.

When starting after running out of fuel, fill the filter cartridge with fuel and bleed the air from the fuel system before starting.

PROCEDURE FOR BLEEDING AIR

1. Remove the fuel filter cartridge, fill the filter case with fuel, then install again.

NOTICE

- **The common rail fuel injection system used on this machine consists of more precise parts than the conventional injection pump and nozzle, so problems may be caused by dust or dirt getting in. When carrying out inspection or maintenance of the fuel system, pay more attention than normal to the entry of dirt. If dirt is stuck to any part, use fuel to wash it off completely.**
- **If no clean fuel is available, bleed the air with priming pump (3) without removing the fuel cartridge.**

NOTICE

- **When filling with fuel, use clean fuel and be careful not to let any dust or dirt get in. Portion (B) at the center is the clean side, so be particularly careful not to let any dust or dirt get in.**
- **When adding fuel, always add from small hole (A) at eight places on the dirty side.**

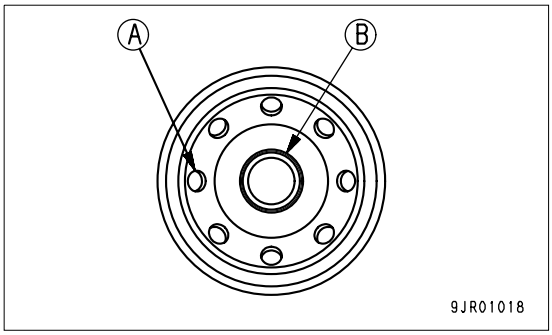

2. Loosen air bleed plug (2) at the top of the fuel filter head and open fuel supply valve (1) at the bottom of the fuel tank.
3. Loosen the knob of priming pump (3), pump the knob, and check that fuel comes out from air bleed plug (2).
   After checking, tighten the plug.
   Tightening torque: 7.8 to 9.8 N·m (0.8 to 1 kgf·m)

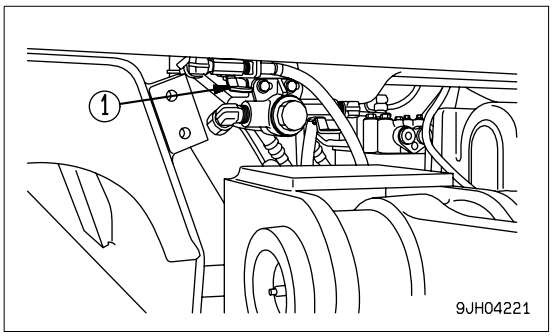

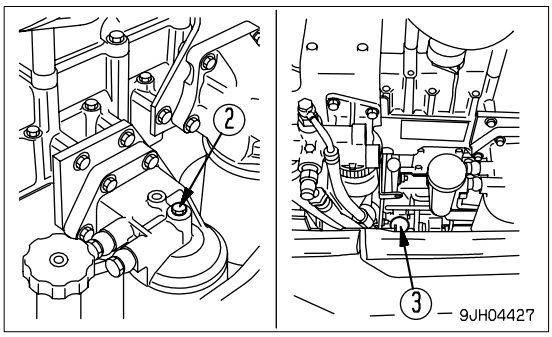

4. Push the knob of priming pump (3) in and tighten it.
5. If the air is not bled properly, return to Step 3 and bleed the air again.
6. For normal starting operations, turn the key in the starting switch to the START position to start the engine.

https://truckmanualshub.com/

METHOD OF TOWING MACHINE

⚠ WARNING

- **Be sure to use a wire rope sufficiently strong for the towing weight.**
- **When using the towing hook, be sure to use a shackle.**
- **Set the wire rope horizontally and align it with the track frame.**
- **Tow the machine slowly.**

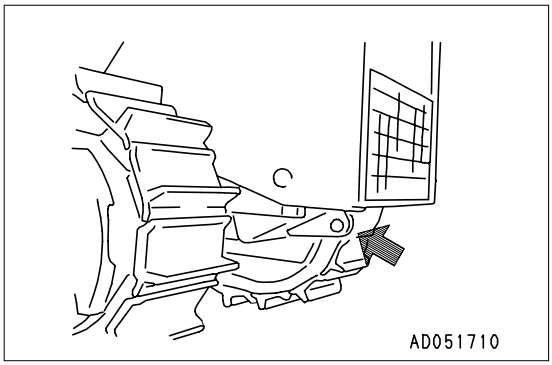

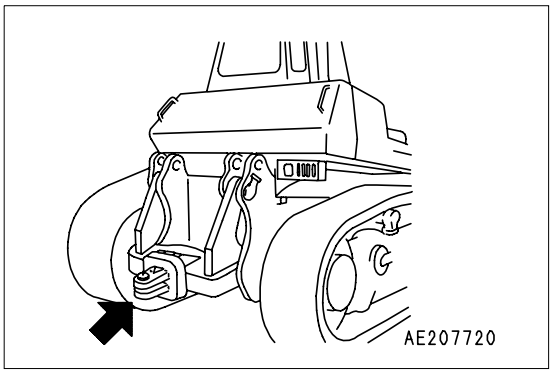

If the machine sinks in mud and cannot get out under its own power, or if being used to tow a heavy object, fit the wire to the towing hook as shown in the diagram on the right, or in the case of machines with a drawbar, fit the wire to the drawbar pin when towing.

NOTICE
Permissible load for towing hook: 21,800 kgf (213,780 N)
Always carry out towing operations within the specified range for the permissible load.

https://truckmanualshub.com/

IF BATTERY IS DISCHARGED

⚠ WARNING

- **When checking or handling the battery, stop the engine and turn the starting key to the OFF position before starting.**
- **The battery generates hydrogen gas, so there is danger of explosion. Do not bring lighted cigarettes near the battery or do anything that will cause sparks.**
- **Battery electrolyte is dilute sulphuric acid, and it will attack your clothes and skin. If it gets on your clothes or on your skin, wash it immediately off with large amounts of water. If it gets in your eyes, wash it out with fresh water, and consult a doctor.**
- **Wear protective glasses and rubber gloves when handling the battery.**
- **When removing the battery, first disconnect the cable for the ground (normally, from the negative (-) terminal). When installing, install the positive (+) terminal first. If a tool touches the cable connecting the positive terminal and the chassis, there is danger that it will cause sparks.**
- **If the terminals are loose, there is danger that the defective contact may generate sparks that will cause an explosion.**
- **When installing the terminals, install them tightly.**
- **Check the positive (+) and negative (-) terminals carefully when removing or installing.**

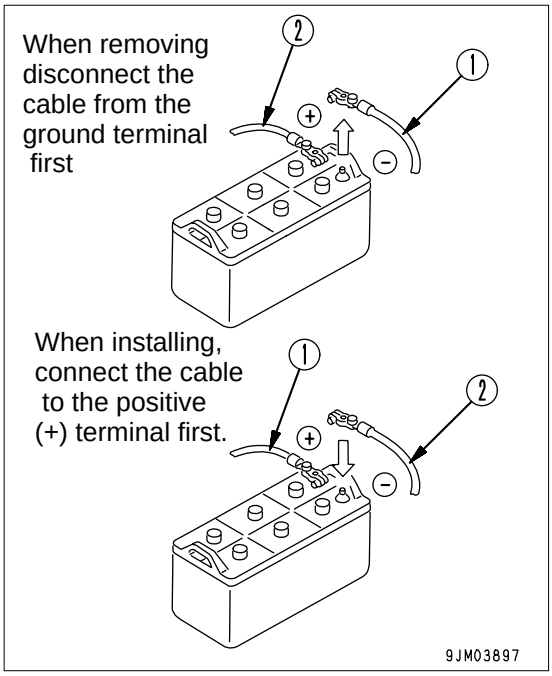

STARTING ENGINE WITH BOOSTER CABLE

When starting the engine with a booster cable, do as follows.

REMOVAL AND INSTALLATION OF BATTERY

1. Open battery cover (1).
2. Before removing the battery, remove the ground cable (normally connected to the negative (-) terminal). If any tool touches between the positive terminal and the chassis, there is danger of sparks being generated. Loosen the nut of the terminal and remove the wires from the battery.
3. When installing the battery, connect the ground cable last. Insert the hole of the terminal on the battery and tighten the nut.

Tightening torque: 9.8 to 19.6 N·m (1 to 2 kgf·m)

4. Close battery cover (1).

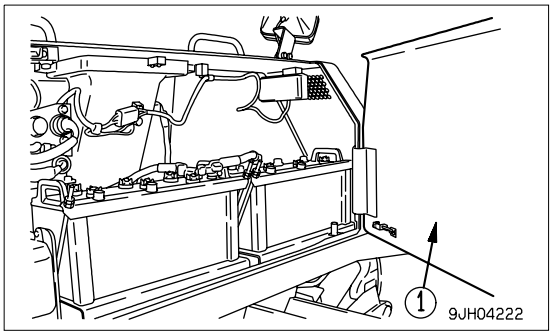

https://truckmanualshub.com/

PRECAUTIONS WHEN CONNECTING AND DISCONNECTING BOOSTER CABLE

WARNING

- **When connecting the cables, never contact the positive (+) and negative (-) terminals.**
- **When starting the engine with a booster cable, always wear safety glasses and rubber gloves.**
- **Be careful not to let the normal machine and problem machine contact each other. This prevents sparks from generating near the battery which could ignite the hydrogen gas given off by the battery.**
- **Make sure that there is no mistake in the booster cable connections. The final connection is to the engine block of the problem machine, but sparks will be generated when this is done, so connect to a place as far as possible from the battery.**
- **When disconnecting the booster cable, take care not to bring the clips in contact with each other or with the machine body.**

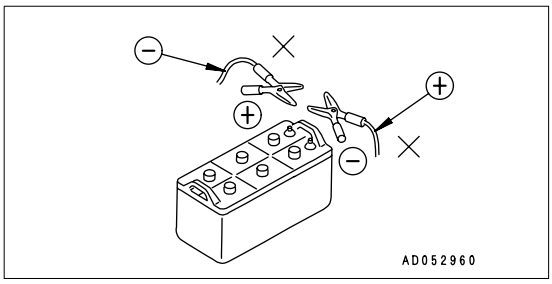

NOTICE

- **The size of the booster cable and clip should be suitable for the battery size.**
- **The battery of the normal machine must be the same capacity as that of the engine to be started.**
- **Check the cables and clips for damage or corrosion.**
- **Make sure that the cables and clips are firmly connected.**
- **Check that the safety lock levers and parking brake levers of both machines are in the LOCK position.**
- **Check that each lever is in the NEUTRAL position.**

CONNECTING THE BOOSTER CABLES

Keep the starting switch of the normal machine and problem machine both at the OFF position.
Connect the booster cable as follows, in the order of the numbers marked in the diagram.

1. Make sure that the starting switches of the normal machine and problem machine are both at the OFF position.
2. Connect one clip of booster cable (A) to the positive (+) terminal of the problem machine.
3. Connect the other clip of booster cable (A) to the positive (+) terminal of the normal machine.
4. Connect one clip of booster cable (B) to the negative (-) terminal of the normal machine.
5. Connect the other clip of booster cable (B) to the engine block of the problem machine.

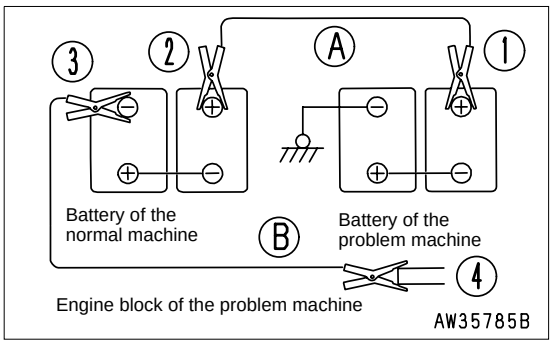

STARTING THE ENGINE

1. Make sure the clips are firmly connected to the battery terminals.
2. Start the engine of the normal machine and keep it to run at high idling speed.
3. Turn the starting switch of the problem machine to the START position and start the engine. If the engine doesn't start at first, try again after 2 minutes or so.

https://truckmanualshub.com/

DISCONNECTING THE BOOSTER CABLES

After the engine has started, disconnect the booster cables in the reverse of the order in which they were connected.

1. Remove one clip of booster cable (B) from the engine block of the problem machine.
2. Remove the other clip of booster cable (B) from the negative (-) terminal of the normal machine.
3. Remove one clip of booster cable (A) from the positive (+) terminal of the normal machine.
4. Remove the other clip of booster cable (A) from the positive (+) terminal of the problem machine.

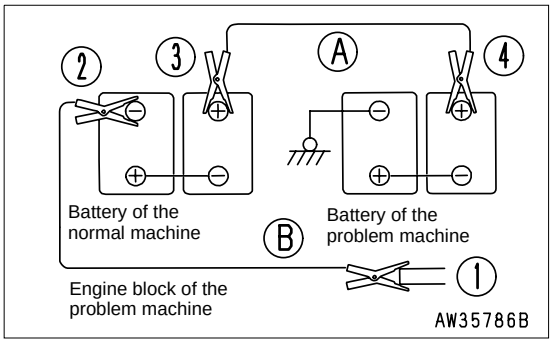

https://truckmanualshub.com/

OTHER TROUBLE

ELECTRICAL SYSTEM

- ( ): Always contact your Komatsu distributor when dealing with these items.
- In cases of abnormalities or causes which are not listed below, please contact your Komatsu distributor for repairs.

Problem	Main cause	Remedy
Lamp does not glow brightly even when the engine runs at high speed	•Defective wiring	(•Check, repair loose terminals, disconnections Check fuses and diodes in fuse box) •Adjust fan belt tension For details, see EVERY 250 HOURS SERVICE
Lamp flickers while engine is running	•Defective adjustment of fan belt tension	
Charge lamp doe not go out even whhen engine is running	•Defective alternator •Defective wiring	(•Replace) (•Check, repair Check fuse, diode in fuse box)
Abnormal noise is generated from alternator	•Defective alternator	(•Replace)
Starting motor does not turn when starting switch is turned to ON	•Defective wiring •Insufficient battery charge	(•Check, repair) •Charge
Pinion of starting motor keeps going in and out	•Insufficient battery charge	•Charge
Starting motor turns engine sluggishly	•Insufficient battery charge •Defective starting motor	•Charge (•Replace)
Starting motor disengages before engine starts	•Defective wiring •Insufficient battery charge	(•Check, repair) •Charge
Preheating monitor lamp does not light up (When the temperature of the engine cooling water exceed 20°C, this condition is normal)	•Defective wiring •Defective timer •Defective monitor •Disconnection in glow plug	(•Check, repair) (•Replace) (•Replace) (•Replace)
Air conditioner operation is defective	•Blown fuse •Insufficient battery charge •Defective air conditioner switch •Defective blower switch •Defective compressor	(•Check, repair) •Charge (•Replace air conditioner switch) (•Replace blower switch) (•Replace)

https://truckmanualshub.com/

MONITOR PANEL

When an error code appears on the display panel B (multi-information), take appropriate remedies based upon the table below.

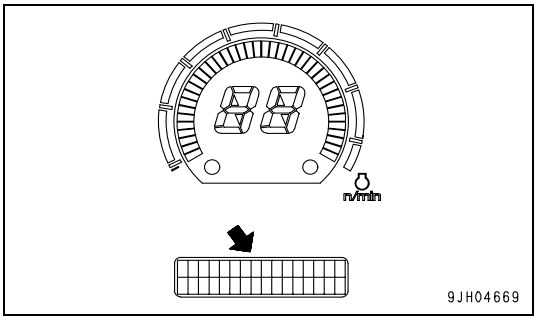

Abnormality code	Abnormality	Method of displaying abnormality	Remedy
E01	•Backup alarm does not sound •Fan rotation is too fast	Displays in turn with service meter	Automatic functions stop, some functions stop, but operation is possible. Please contact your Komatsu distributor for repairs.
E02	•Tilt limit does not work •Does not shift up or shift down •Pitch does not work	Abnormality code and service hour are displayed in turn on service meter portion, caution lamp flashes, buzzer sounds	If user stops engine and then starts again, operations are possible without limit functions. However, user must be careful. Please contact your Komatsu distributor immediately for repairs.
E03+CALL	•Number of speed ranges that can be used is limited •Engine does not run at full speed •Excessive shock when shifting gear •Turning ability becomes poor •Excessive braking shock •Abnormality in engine water temperature sensor	Abnormality code and service hour are displayed in turn on service meter portion, caution lamp flashes, buzzer sounds	Move machine to a safe place, then contact your Komatsu distributor immediately for repairs.
E04+CALL	•Engine control impossible •Travel impossible •Machine does not stop	Abnormality code and service hour are displayed in turn on service meter portion, caution lamp flashes, buzzer sounds	Stop machine, then contact your Komatsu distributor immediately for repairs.

https://truckmanualshub.com/

CHASSIS

- ( ): Always contact your Komatsu distributor when dealing with these items.
- In cases of abnormalities or causes which are not listed below, please contact your Komatsu distributor for repairs.

Problem	Main causes	Remedy
Oil pressure in torque converter fails to rise	•Improper tightening of oil pipe, pipe joint, air leaking in or oil leaking out because of damage •Wear, scuffing of gear pump •Insufficient oil in power train case •Clogged oil filter element strainer in power train case	•Check, repair (•Check, replace) •Add oil to the specified level. For details, see CHECK BEFORE STARTING •Clean. For details, see EVERY 500 HOURS SERVICE
Torque converter is overheats	•Clogged radiator •Engine water temperature is high •Clogged oil cooler •Oil pressure too low •Lack of flow of lubricant caused by wear of power train gear pump	•Clean radiator core •See ENGINE related parts (•Clean or replace) •Go to “Oil pressure in torque converter fails to rise“ (•Replace gear pump)
Torque converter oil temperature gauge dose not work	•Defective oil temperature gauge •defective contact in wiring connection	(•Replace oil temperature gauge) (•Check, repair)
Lacks drawber pull (machine dose not pick up speed)	•Lack of engine horsepower •Oil pressure in torque converter is too low	•See ENGINE related parts •Go to “ Oil pressure in torque converter fails to rise“
Machine will not move off when joystick is placed at FORWARD	•Insufficient oil inb power train case •Transmission oil pressure does not rise •Defective lever wiring •Parking lever is at LOCK position	•Add oil to specified level. For details, see CHECK BEFORE STARTING •Go to oil pressure in torque converter fails to rise (•Check, repair) •Set to FREE position
Dose not steer even when steering is operated	•Brake is not applied on side which is pulled •Parking lever is at LOCK position •Defective lever wiring •Abnormality HSS pump •Abnormality HSS motor	(•Adjust linkage. Check brake pressure) •Set to FREE position (•Check, repair) (•Check, replace) (•Check, replace)
Machine doesn't stop when brake pedal are depressed	•Defective brake adjustment	(•Adjust linkage) (•Check brake pressure)
Track comes off	•Track is too losse	•Adjust track tension. For details, see WHEN REQUIRED
Sprocket develops abnormal wear	•Track is too loose or too tight	•Adjust track tension. For details, see WHEN REQUIRED

https://truckmanualshub.com/

Problem	Main causes	Remedy
Machine does not travel in straight line	•Defective adjustment of HSS controller •Abnormality HSS pump	(•Adjust) (•Replace)
blade rises too slowly or dose not rise at all (or blade tilts too slowly)	•Lack of hydraulic oil •Defective hydraulic pump •Work equipment lock lever is at LOCK position	•Add oil to specified level. For details, see EVERY 250 HOURS SERVICE •Check •Set to FREE position
Ripper moves too slowly, does not move	•Lack of hydraulic oil •Defective hydraulic pump •Work equipment lock lever is at LOCK position	•Add oil to specified level. For details, see EVERY 250 HOURS SERVICE •Check •Set to FREE position
Insufficient force of ripper	•Leakage from piping	(•Tighten)

https://truckmanualshub.com/

ENGINE

- ( ): Always contact your Komatsu distributor when dealing with these items.
- In cases of abnormalities or causes which are not listed below, please contact your Komatsu distributor for repairs.

Problem	Main causes	Remedy
Engine oil pressure monitor flashes when engine speed is raised after completion of warm-up	•Engine oil pan oil level is low (sucking in air) •Clogged oil filter cartridge •Defective tightening of oil pipe joint, oil leakage from damaged part •Defective monitor panel	•Add oil to specified level, see CHECK BEFORE STARTING •Replace cartridge, see EVERY 500 HOURS SERVICE (•Check, repair) (•Replace)
Steam is emitted from top part of radiator (pressure valve)	•Cooling water level low, water leakage •Dirt or scale accumulated in cooling system •Clogged radiator fin or damaged fin •Defective thermostat •Loose radiator filler cap (high altitude operation) •Defective monitor panel	•Add cooling water, repair, see CHECK BEFORE STARTING •Change cooling water, clean inside of cooling system, see WHEN REQUIRED •Clean or repair, see WHEN REQUIRED (•Replace thermostat) •Tighten cap or replace packing (•Replace)
Engine water temperature monitor remains alight altitude operation)		
Engine does not start when starting motor is turned	•Lack of fuel •Air in fuel system •No fuel in fuel filter •Starting motor cranks engine sluggishly •Defective valve compression	•Add fuel, see CHECK BEFORE STARTING •Repair place where air is sucked in (•Replace pump or nozzle) •See ELECTRICAL SYSTEM (•Adjust valve clearance)
Exhaust gas is white or blue	•Too much oil in oil pan •Improper fuel	•Add oil to specified level, see CHECK BEFORE STARTING •Change to specified fuel
Exhaust gas occasionally turns black	•Clogged air cleaner element •Defective nozzle •Defective compression •Defective turbocharger	•Clean or replace, see WHEN REQUIRED (•Replace nozzle) (•Adjust valve clearance) (•Clean or replace, turbocharger)
Combustion noise occasionally makes breathing sound	•Defective nozzle •Lack of fuel (in Air)	(•Replace nozzle) •Add fuel
Abnormal noise generated (combustion or mechanical)	•Low grade fuel being used •Overheating •Damage inside muffler •Excessive valve clearance	•Change to specified fuel •See item “Indicator of water temperature gauge is in red range on right side of gauge“. (•Replace muffler) (•Adjust valve clearance)
Monitor displays error code	Please contact your Komatsu distributor	
Alarm buzzer sounds		
Engine horsepower lowered suddenly (Engine is running in duration mode)		

https://truckmanualshub.com/

MAINTENANCE

⚠ WARNING

Please read and make sure that you understand the safety volume before reading this section.

https://truckmanualshub.com/

GUIDES TO MAINTENANCE

Do not carry out any inspection and maintenance operation that is not found in this manual.
Stop the machine on flat hard ground when carrying out inspection and maintenance.

CHECK SERVICE METER

Check the service meter reading every day to see if the time has come for any necessary maintenance to be carried out.

KOMATSU GENUINE REPLACEMENT PARTS:

Use Komatsu genuine parts specified in the Parts Book as replacement parts.

KOMATSU GENUINE OILS:

Use Komatsu genuine oils and grease. Choose oils and grease with proper viscosities specified for ambient temperature.

ALWAYS USE CLEAN WASHER FLUID:

Use automobile window washer fluid, and be careful not to let any dirt get into it.

CLEAN OIL AND GREASE:

Use clean oil and grease. Also, keep the containers of the oil and grease clean. Keep foreign materials away from oil and grease.

CHECK FOREIGN MATERIAL IN DRAINED OIL:

After oil is changed or filters are replaced, check the old oil and filters for metal particles and foreign materials. If large quantity of metal particles or foreign materials are found, always report to the person in charge, and carry out suitable action.

FUEL STRAINER:

If your machine is equipped with a fuel strainer, do not remove it while fueling.

WELDING INSTRUCTIONS:

- Turn off the engine starting switch.
- Do not apply more than 200V continuously.
- Connect grounding cable within 1m from the area to be welded. If grounding cable is connected near instruments, connectors, etc., the instruments may malfunction.
- If a seal or bearing happen to come between the welding part and grounding point, change the grounding point to avoid such parts.
- Do not use the area around the work equipment pins or the hydraulic cylinders as the grounding point.

OBJECTS IN YOUR POCKETS:

- When opening inspection windows or the oil filler port of the tank to carry out inspection, be careful not to drop nuts, bolts, or tools inside the machine.
  If such things are dropped inside the machine, it will cause damage and malfunction of the machine, and will lead to failure. If you drop anything inside the machine, always remove it immediately.
- Do not put unnecessary things in your pockets. Carry only things which are necessary for inspection.

DUSTY WORKSITES:

When working at dusty worksites, do as follows:

- Inspect the air cleaner clogging monitor frequently to see if the air cleaner is clogged.
  Clean the air cleaner element at a shorter interval than specified.
- Clean the radiator core frequently to avoid clogging.
- Clean and replace the fuel filter frequently.
- Clean electrical components, especially the starting motor and alternator, to avoid accumulation of dust.
- When inspecting or changing the oil, move the machine to a place that is free of dust to prevent dirt from getting into the oil.

AVOID MIXING OILS:

If a different type of oil has to be added, drain the old oil and replace all the oil with the new type of oil. Never mix different kinds of oil.

https://truckmanualshub.com/

LOCKING INSPECTION COVERS:

Lock inspection cover in position securely with the lock bar. If inspection or maintenance is carried out with the inspection cover not locked in position, there is a hazard that it may be suddenly blown shut by the wind and cause injury to the worker.

BLEEDING AIR:

When hydraulic equipment has been repaired or replaced, or the hydraulic piping has been removed and installed again, the air must be bled from the circuit. For details, see “BLEEDING AIR IN HYDRAULIC SYSTEM (4-36)“.

PRECAUTIONS WHEN INSTALLING HYDRAULIC HOSES:

- When removing parts at locations where there are O-rings or gasket seals, clean the mounting surface, and replace with new parts.
  When doing this, be careful not to forget to assemble the O-rings and gaskets.
- When installing the hoses, do not twist them or bend them into loops with a small radius.
  This will cause damage to the hose and markedly reduce its service life.

CHECKS AFTER INSPECTION AND MAINTENANCE:

If you forget carrying out the checks after inspection and maintenance, unexpected problems may occur, and this may lead to serious injury or property damage. Always do as follows.

- Checks after operation (with engine stopped)
  - Have any inspection and maintenance points been forgotten?
  - Have all inspection and maintenance items been carried out correctly?
  - Have any tools or parts been dropped inside the machine? It is particularly dangerous if parts are dropped inside the machine and get caught in the lever linkage mechanism.
  - Is there any leakage of water or oil? Have all the bolts been tightened?
- Checks when operating engine
  - For details of the checks when operating the engine, see “PROPER TOOLS (2-25)“ and pay careful attention to safety.
  - Are the inspection and maintenance items working properly?
  - Is there any leakage of fuel or oil when the engine speed is raised?

https://truckmanualshub.com/

PRECAUTIONS WHEN OPENING AND CLOSING ENGINE SIDE COVER:

- When standing on track to open the engine side cover, adopt a standing position, hold the side cover with both thumbs, and open it slowly with your other fingers.

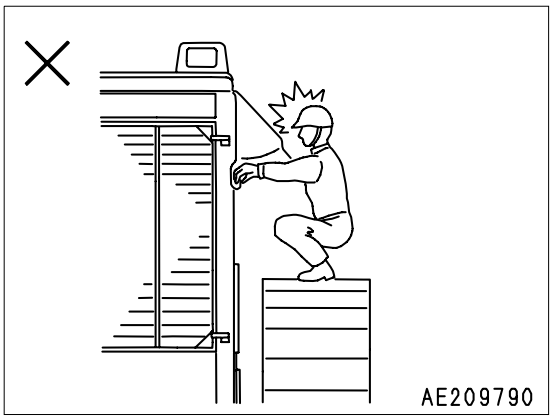

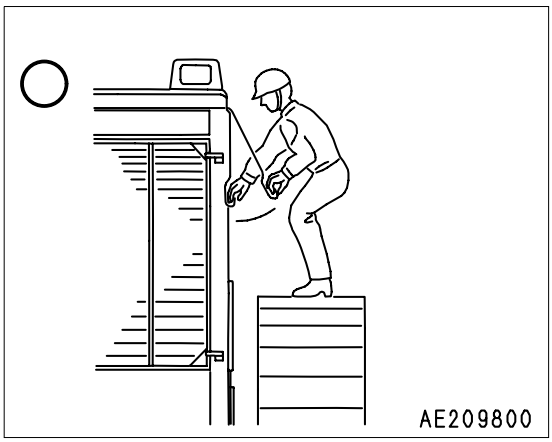

https://truckmanualshub.com/

OUTLINES OF SERVICE

HANDLING OIL, FUEL, COOLANT, AND PERFORMING OIL CLINIC

OIL

- Oil is used in the engine and work equipment under extremely severe conditions (high temperature, high pressure), and deteriorates with use.
  Always use oil that matches the grade and temperature for use given in the Operation and Maintenance Manual.
  Even if the oil is not dirty, always change the oil after the specified interval.
- Oil corresponds to blood in the human body, so always be careful when handling it to prevent any impurities (water, metal particles, dirt, etc.) from getting in.
  The majority of problems with machines are caused by the entry of such impurities.
  Take particular care not to let any impurities get in when storing or adding oil.
- Never mix oils of different grades or brands.
- Always add the specified amount of oil.
  Having too much oil or too little oil are both causes of problems.
- If the oil in the work equipment is not clear, there is probably water or air getting into the circuit. In such cases, please contact your Komatsu distributor.
- When changing the oil, always replace the related filters at the same time.
- We recommend you to have an analysis made of the oil periodically to check the condition of the machine. For those who wish to use this service, please contact your Komatsu distributor.
- At the time of shipping from the factory, SAE1OWCD is used for hydraulic type of oil. When HO46-hydraulic oil is going to be used, change specified amount of oil (whole amount). The hydraulic oil that is not recommended by Komatsu can cause clogging of oil filter, so do not use it. The portion of the oil that remains in the piping or cylinders will not be a problem even though it will be mixed into new oil.

FUEL

- The fuel pump is a precision instrument, and if fuel containing water or dirt is used, it cannot work properly.
- Be extremely careful not to let impurities get in when storing or adding fuel.
- Always use the fuel specified in the Operation and Maintenance Manual.
  Fuel may congeal depending on the temperature when it is used (particularly in low temperature below -15°C).
  It is necessary to use the fuel that is suitable for the temperature.
- To prevent the moisture in the air from condensing and forming water inside the fuel tank, always fill the fuel tank after completing the day's work.
- Before starting the engine, or when 10 minutes have passed after adding fuel, drain the sediment and water from the fuel tank.
- If the engine runs out of fuel, or if the filters have been replaced, it is necessary to bleed the air from the circuit.

COOLANT

- River water contains large amount of calcium and other impurities, so if it is used, scale will stick to the engine and radiator, and this will cause defective heat exchange and overheating.
  Do not use water that is not suitable for drinking.
- When using antifreeze, always observe the precautions given in the Operation and Maintenance Manual.
- Komatsu machines are supplied with Komatsu specified antifreeze in the coolant when the machine is shipped. This antifreeze is also effective in preventing corrosion of the cooling system.
  Replace the antifreeze periodically. For details, see “CLEAN INSIDE OF COOLING SYSTEM (4-19)“.
- Antifreeze is flammable, so be extremely careful not to expose it to flame or fire.
- The proper mixing proportion of the antifreeze depends on the ambient temperature. For the mixing proportion, see “CLEAN INSIDE OF COOLING SYSTEM (4-19)“.
- If the engine overheats, wait for the engine to cool before adding coolant.
- If the coolant level is low, it will cause overheating and will also cause problems with corrosion from the air in the coolant.

https://truckmanualshub.com/

GREASE

- Grease is used to prevent twisting and noise at the joints.
- The nipples not included in the MAINTENANCE section are nipples used when overhauling, so they do not need grease.
  If any part becomes stiff or generates noise after being used for a long time, grease it.
- Always wipe off all of the old grease that is pushed out when greasing.
  Be particularly careful to wipe off the old grease in places where sand or dirt sticking in the grease would cause wear of the rotating parts.

CARRYING OUT KOWA (Komatsu Oil Wear Analysis)

KOWA is a maintenance service that makes it possible to prevent machine failures and down-time. With KOWA, the oil is periodically sampled and analyzed. This enables early detection of wear of the machine drive parts and other abnormalities.
Periodic use of KOWA makes the following possible:
It enables abnormalities to be detected early, leading to reduction of repair costs and machine downtime.
It enables repair schedules to be planned, leading to improved machine availability.

KOWA ANALYSIS ITAMS

- Analysis of metal wear particles
  This uses an ICP (Inductively Coupled Plasma) analyzer to measure the density of metal wear particles in the oil.

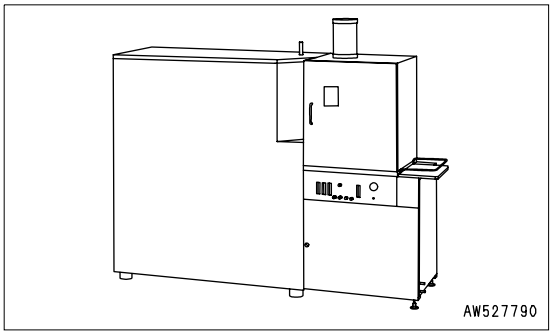

- Measurement of particle quantity
  This uses a PQI (Particle Quantifier Index) measurer to measure the quantity of large iron particles in the oil.

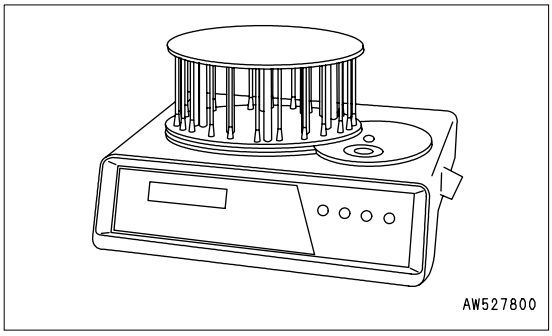

- Others
  Measurements are made of items such as the ratio of water or fuel in the oil, and the dynamic viscosity.

OIL SAMPLING

- Sampling interval
  250 hours: Engine
  500 hours: Other components
- Precautions when sampling
  - Make sure that the oil is well mixed before sampling.
  - Carry out sampling regularly at fixed intervals.
  - Do not carry out sampling on rainy or windy days when water or dust can get into the oil.

For further details of KOWA, please contact your Komatsu distributor.

https://truckmanualshub.com/

STORING OIL AND FUEL

- Keep indoors to prevent any water, dirt, or other impurities from getting in.
- When keeping drum cans for a long period, put the drum on its side so that the filler port of the drum can is at the side to prevent moisture from being sucked in.
  If drum cans have to be stored outside, cover them with a waterproof sheet or take other measures to protect them.
- To prevent any change in quality during long-term storage, be sure to use in the order of first in - first out (use the oldest oil or fuel first).

FILTERS

- Filters are extremely important safety parts. They prevent impurities in the fuel and air circuits from entering important equipment and causing problems.
  Replace all filters periodically. For details, see the Operation and Maintenance Manual.
  However, when working in severe conditions, replace the filters at shorter intervals according to the oil and fuel (sulfur content) being used.
- Never try to clean the filters (cartridge type) and use them again. Always replace with new filters.
- When replacing oil filters, check if any metal particles are affixed to the old filter. If any metal particles are found, please contact your Komatsu distributor.
- Do not open packs of spare filters until just before they are to be used.
- Always use Komatsu genuine filters.

OUTLINE OF ELECTRIC SYSTEM

- It is extremely dangerous if the electrical equipment becomes wet or the covering of the wiring is damaged. This will cause electrical leakage and may lead to malfunction of the machine.
- Inspection and maintenance works include checking the fan belt for tension and damage as well as the battery for electrolyte level.
- Never remove or disassemble any electric components installed in the machine.
- Never install any electric components other than those specified by Komatsu.
- Be careful to keep the electric system free of water when washing the machine or when it rains.
- When working on the seashore, carefully clean the electric system to prevent corrosion.
- Never connect any opetional power source to the fuse, starting switch, battery relay, etc.

https://truckmanualshub.com/

WEAR PARTS LIST

Wear parts such as the filter element, cutting edge, etc. are to be replaced at the time of periodic maintenance or before their abrasion limits.
The wear parts should be changed correctly in order to use the machine economically.
For part change, Komatsu genuine parts of excellent quality should be used.
When requesting parts, check their part numbers from the parts list.

WEAR PARTS LIST

The parts in parentheses are to be replaced at the same time.

Item		Part No.	Part Name	Weight (kg)	Q'ty	Replacement frequency
Engine oil filter		600-211-1340	Cartridge	-	1	Every 500 hours service
Transmission filter		07063-01100 (07000-02130)	Element (O-ring)	- -	1 (1)	
Fuel filter		600-311-3110	Cartridge	-	1	
Corrosion resistor		600-411-1151	Cartridge	-	1	Every 1000 hours service
Hydraulic tank breather element		20Y-60-21470	Element	-	1	
Hydraulic oil filter		207-60-71180 (07000-05195)	Element (O-ring)	- -	1 (1)	Every 2000 hours service
Air cleaner		6125-81-7032	Element Ass'y	-	1	-
		600-181-4300	Outer element assembly	-	1	-
Blade	D85EX	154-70-11314 154-71-43190 (154-71-41270) (01643-21845) (154-70-22270) 150-70-21346 150-70-21356 (154-71-41270) (01643-21845) (154-70-22270)	Cutting edge Cutting edge (Bolt) (Washer) (Nut) End bit (right) End bit (left) (Bolt) (Washer) (Nut)	52.9 - - - - - - - - -	1 2 (20) (20) (20) 1 1 (12) (12) (12)	-
	D85PX	154-70-11314 (154-71-41270) (01643-21845) (154-70-22270)	Cutting edge (Bolt) (Washer) (Nut)	52.9 - - -	3 (24) (24) (24)	-
Ripper (variable multi ripper)		154-78-31330 175-78-31230 (09244-02508)	Protector Point (Pin)	- - -	3 3 (9)	-

NOTICE
When handling parts that weigh more than 25 kg, remember that they are heavy objects, and take the necessary care.

https://truckmanualshub.com/

USE OF FUEL, COOLANT AND LUBRICANTS ACCORDING TO AMBIENT TEMPERATURE

PROPER SELECTION OF FUEL, COOLANT AND LUBRICANTS

Reservoir	Kind of fluid	AMBIENT TEMPERATURE		Type	CAPACITY	
		Min	Max		Specified	Refill
Engine oil pan	Engine oil	0°C -20°C -15°C -20°C	40°C 10°C 40°C 40°C	SAE 30 SAE 10W SAE 15W-40 SAE 10W-30	44 liter	38 liter
Power train oil pan (incl. transmission, torque converter and bevel gear casses)		0°C -20°C	40°C 10°C	SAE 30 SAE 10W	90 liter	60 liter
Final drive case (each)					26 liter	26 liter
Damper case		-20°C	40°C	SAE 30	1,5 liter	1,5 liter
Hydraulic system		-20°C	40°C	SAE 10W	(EX)120 liter (PX) 106 liter	67 liter
		-20°C	40°C	SAE 10W-30		
		-15°C	40°C	SAE 15W-40		
Fuel tank	Diesel fuel	-10°C -20°C	40°C -10°C	ASTM D975 No. 2 ASTM D975 No. 1 (for winter use)	490 liter	
Cooling sytem	Water	Add antifreeze			82 liter	
Grease fitting	Grease	-20°C	40°C	NLGI No. 2		

https://truckmanualshub.com/

REMARK

- **When fuel sulphur content is less than 0.5%, change oil in the oil pan according to the periodic maintenance hours described in this manual.**
- **Change oil according to the following table if fuel sulphur content is above 0.5%.**

- **When starting the engine with an atmospheric temperature of lower than 0°C, be sure to use engine oil of SAE10W, SAE10W-30 and SAE15W-40, even though the atmospheric temperature goes up to 10°C more or less during the day.**

- **Use API classification CD as engine oil and if API classification CC, reduce the engine oil change interval to half.**

- **There is no problem if single grade oil is mixed with multigrade oil (SAE10W-30, 15W-40), but be sure to add single grade oil that matches the temperature range in the table.**

- **We recommend Komatsu genuine oil which has been specifically formulated and approved for use in engine and hydraulic work equipment applications.**

Specified capacity: Total amount of oil including oil for components and oil in piping.

Refill capacity: Amount of oil needed to refill system during normal inspection and maintenance.

ASTM: American Society of Testing and Material
SAE: Society of Automotive Engineers
API: American Petroleum Institute

Fuel sulphur content	Change interval of oil in engine oil pan
0.5 to 1.0%	1/2 of regular interval
Above 1.0%	1/4 of regular interval

https://truckmanualshub.com/

No.	Supplier	Engine Oil [CD or CE] SAE10W, 30, 40 10W30, 15W40 (The 15W40 oil marked * is CE.)	Gear Oil [GL-4 or GL-5] SAE80, 90, 140	Grease [Lithium-Base] NLGI No.2	Antifreeze Coolant [Ethylene Glycol Base] Permanent Type
1	KOMATSU	EO10-CD EO30-CD EO10-30CD EO15-40CD	GO90 GO140	G2-LI G2-LI-S	AF-ACL AF-PTL AF-PT(Winter, one season type)
2	AGIP	Diesel sigma S super dieselmulti-grade *Sigma turbo	Rotra MP	GR MU/EP	-
3	AMOCO	*Amoco 300	Multi-purpose gear oil	PYKON premium grease	-
4	ARCO	*Arcofleet S3 pius	Arco HD gear oil	Litholine HEP 2 Arco EP moly D	-
5	BP	Vanellus C3	Gear oil EP Hypogear EP	Energrease LS-EP2	Antifreeze
6	CALTEX	*RPM delo 400 RPM delo 450	Universal thuban Universal thuban EP	Marfak all purpose 2 Ultra-duty grease 2	AF engine cool-ant
7	CASTROL	*Turbomax *RX super CRD	EP EPX Hypoy Hypoy B Hypoy C	MS3 Spheerol EPL2	Antifreeze
8	CHEV-RON	*Delo 400	Universal gear	Ultra-duty grease 2	-
9	CONOCO	*Fleet motor oil	Universal gear lubricant	Super-sta grease	-
10	ELF	Multiperformance 3C Performance 3C	-	Tranself EP Tranself EP type 2	Glacelf
11	EXXON (ESSO)	Essolube D3 *Essolube XD-3 *Essolube XD-3 Extra *Esso heavy duty Exxon heavy duty	Gear oil GP Gear oil GX	Beacon EP2	All season cool-ant
12	GULF	Super duty motor oil *Super duty plus	Multi-purpose gear lubricant	Gulfcrown EP2 Gulfcrown EP special	Antifeeze and coolant
13	MOBIL	Delvac 1300 *Delvac super 10W-30, 15W-40	Mobilube GX Mobilube HD	Mobilux EP2 Mobilgease 77 Mobilgrease special	-

https://truckmanualshub.com/

No.	Supplier	Engine Oil [CD or CE] SAE10W, 30, 40 10W30, 15W40 (The 15W40 oil marked * is CE.)	Gear Oil [GL-4 or GL-5] SAE80, 90, 140	Grease [Lithium-Base] NLGI No.2	Antifreeze Coolant [Ethylene Glycol Base] Permanent Type
14	PEN-NZOIL	*Supreme duty fleet motor oil	Multi-purpose 4092 Multi-purpose 4140	Multi-purpose white grease 705 707L White-bearing grease	Antifreeze and summer coolant
15	PETRO-FINE	FINA kappa TD	FINA potonic N FINA potonic NE	FINA marson EPL2	FINA tamidor
16	SHELL	Rimura X	Spirax EP Spirax heavy duty	Albania EP grease	-
17	SUN	-	Sunoco GL5 gear oil	Sunoco ultra prestige 2EP Sun prestige 742	Sunoco anti-freeze and summer coolant
18	TEXACO	*Ursa super plus Ursa premium	Multigear	Multifak EP2 Starplex 2	Coda 2055 star-tex antifreeze cool-ant
19	TOTAL	Rubia S *Rubia X	Total EP Total Transmission TM	Multis EP2	Antigal/antifreeze
20	UNION	*Guardol	MP gear lube LS	Unoba EP	-
21	VEEDOL	*Turbostar *Diesel star MDC	Multigear Multigear B Multigear C	-	Antifreeze

https://truckmanualshub.com/

STANDARD TIGHTENING TORQUES FOR BOLTS AND NUTS

TORQUE LIST

CAUTION

If nuts, bolts, or other parts are not tightened to the specified torque, it will cause looseness or damage to the tightened parts, and this will cause failure of the machine or problems with operation.
Always pay careful attention when tightening parts.

Unless otherwise specified, tighten the metric nuts and bolts to the torque shown in the table below.
If it is necessary to replace any nut or bolt, always use a Komatsu genuine part of the same size as the part that was replaced.

Thread diameter of bolt (a)(mm)	Width across flats (b)(mm)	Tightening torque			
		Target value		Service limit	
		N·m	kgf·m	N·m	kgf·m
6	10	13.2	1.35	11.8-14.7	1.2-1.5
8	13	31	3.2	27-34	2.8-3.5
10	17	66	6.7	59-74	6.0-7.5
12	19	113	11.5	98-123	10.0-12.5
14	22	177	18	157-196	16.0-20.0
16	24	279	28.5	245-309	25.0-31.5
18	27	382	39	343-425	35.0-43.5
20	30	549	56	490-608	50.0-62.0
22	32	745	76	662-829	67.5-84.5
24	36	927	94.5	824-1030	84.0-105.0
27	41	1320	135.0	1180-1470	120.0-150.0
30	46	1720	175.0	1520-1910	155.0-195.0
33	50	2210	225.0	1960-2450	200.0-250.0
36	55	2750	280.0	2450-3040	250.0-310.0
39	60	3280	335.0	2890-3630	295.0-370.0

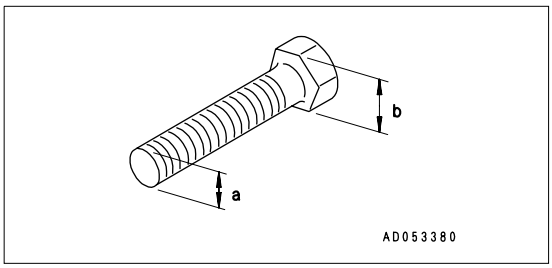

Apply the following table for Hydraulic Hose.

Nominal-No. of threads (a)	Width across flats (b) mm	Tightening torque (N·m (kgf·m))	
		Target valve	Parmissible range
9/16 -18UNF	19	44 (4.5)	35 - 63 (3.5 - 6.5)
11/16 -16UN	22	74 (7.5)	54 - 93 (5.5 - 9.5)
13/16 -16UN	27	103 (10.5)	84 - 132 (8.5 - 13.5)
1 -14UNS	32	157 (16.0)	128 - 186 (13.0 - 19.0)
13/16 -12UN	36	216 (22.0)	177 - 245 (18.0 - 25.0)

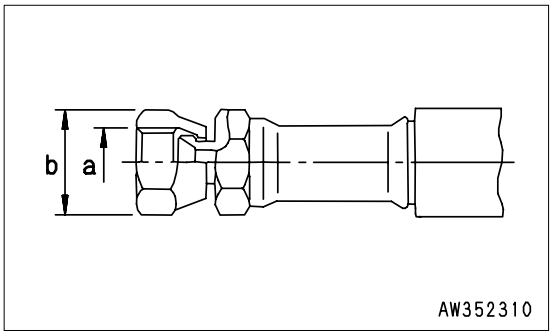

https://truckmanualshub.com/

PERIODIC REPLACEMENT OF SAFETY CRITICAL PARTS

For using the machine safely for an extended period of time, you are requested to periodically replace the safety - critical and fire prevention- related parts listed in the table of important parts on the following page.
Material quality of these parts can change as time passes and they are likely to wear out or deteriorate. However, it is difficult to determine the extent of wear or deterioration at the time of periodic maintenance. Hence, it is required to replace them with new ones regardless of their condition after a certain period of usage. This is important to ensure that these parts maintain their full performance at all times.
Furthermore, should anything abnormal be found on any of these parts, replace it with a new one even if the periodic replacement time for the part has not yet arrived.
If any of the hose clamps show deterioration like deformation or cracking, replace the clamps at the same time as the hoses.
Also carry out the following checks with hydraulic hoses which need not be replaced periodically. Tighten a loosened clamp or replace a defective hose, as required.
When replacing the hoses, always replace the O-rings, gaskets, and other such parts at the same time.
Ask your Komatsu distributor to replace the critical parts.
Check the hydraulic hoses and the fuel hose, too, when carrying out the following periodic inspections.

Interval	Check items
Check before starting	Oil leakage from the connections or the clamps of fuel and hydraulic hose
Monthly inspection	Oil leakage from the connections or the clamps of fuel and hydraulic hose. Damage (crack, wear and tear) of fuel and hydraulic hose.
Yearly inspection	Oil leakage from the connections or the clamps of fuel and hydraulic hose. Interference, deformation, deterioration and damage (crack, wear and tear) of fuel and hydraulic hose.

https://truckmanualshub.com/

SAFETY CRITICAL PARTS

Replace wear parts such as the filter element or air cleaner element at the time of periodic maintenance or before they reach the wear limit. The wear parts should be replaced correctly in order to ensure more economic use of the machine. When replacing parts, always use Komatsu genuine parts.
As a result of our continuous efforts to improve product quality, the part number may change, so inform your Komatsu distributor of the machine serial number and check the latest part number when ordering parts.

No.	Safety critical parts for periodic replacement	Q'ty	Replacement interval
1	Fuel hose (nozzle - fuel return hose)	1	Every 2 years or 4000 hours, whichever comes sooner
2	Fuel hose (scavenging pump - fuel return hose)	1	
3	Fuel hose (fuel tank - fuel strainer)	1	
4	Fuel hose (fuel strainer - scavenging pump)	1	
5	Fuel hose (hand priming pump - supply pump)	1	
6	Hose (Torque converter oil cooler - power train assembly)	1	
7	Hose (power train pump - power train filter)	1	
8	Hose (Transmission filter - power train assembly)	1	
9	Hose (transmission case - steering case)	1	
10	Inspection hose assembly for power train pressure	1	
11	Hose (right pivot shaft cover - straight frame relay tube)	2	
12	Hose (straight frame relay tube - blade tilt CYL)	2	
13	Hose (HSS motor - main control valve)	2	
14	Hose (HSS pump - central drain block)	1	
15	Hose (HSS motor - central drain block)	1	
16	Hose (central drain block (P/L) - main control valve)	1	
17	Hose (oil cooler - central drain block)	2	
18	Hose (Fan pump - self-reducing pressure valve)	1	
19	Hose (self-reducing pressure valve - fan motor)	3	
20	Hose (PCC divider block - main control valve)	2	
21	Hose (PCC divider block - fan pump)	1	
22	Hose (PCC divider block - main control lock valve)	2	
23	Hose (oil cooler bypass valve - hydraulic oil cooler)	2	
24	Hose (self-reducing pressure valve - central drain block)	1	
25	Hose (main control valve - central drain block)	1	
26	Hose (fan motor - hydraulic tank)	4	
27	Hose (self-reducing pressure valve - PPC lock valve)	1	
28	Hose (PPC lock valve - blade PPC lock valve)	1	

https://truckmanualshub.com/

No.	Safety critical parts for periodic replacement	Q'ty	Replacement interval
29	Hose (PPC lock valve - ripper PPC valve)	1	Every 2 years or 4000 hours, whichever comes sooner
30	Hose (blade PPC valve - main control valve)	4	
31	Hose (ripper PPC valve - main control valve)	2	
32	Hose (blade PPC valve - central drain block)	1	
33	Hose (ripper PPC valve - central drain block)	1	
34	Hose (HSS pump - main control valve)	2	
35	Hose (main control valve - ripper relay block)	2	
36	Hose (oil cooler bypass valve - hydraulic tank)	1	
37	Hose (ripper relay block - ripper cylinder)	4	
38	Hose (main control valve - blade tilt relay cover)	4	
39	Hose (main control valve - blade relay tube)	2	
40	Hose (central drain block - hydraulic tank)	1	
41	Hose (radiator guard top - lift cylinder)	24	
42	Injector nozzle tip	1S	
43	Seat belt	1	Every 3 years
44	High-pressure tube clamp	1S	Every 8000 hours
45	Fuel spray prevention cap	1S	

https://truckmanualshub.com/

MAINTENANCE SCHEDULE CHART

MAINTENANCE SCHEDULE CHART

INTIAL 250 HOURS SERVICE(ONLY AFTER THE FIRST 250 HOURS)

CHANGE OIL IN HYDRAULIC TANK, REPLACE HYDRAULIC OIL FILTER ELEMENT, CLEAN HYDRAULIC TANK STRAINER 4-53
CHANGE OIL IN FINAL DRIVE CASE 4-54

WHEN REQUIRED

CLEAN INSIDE OF COOLING SYSTEM 4-19
CHECK, CLEAN AND REPLACE AIR CLEANER ELEMENT 4-21
CHECK TRACK TENSION 4-24
CHECK AND TIGHTEN TRACK SHOE BOLTS 4-25
ADJUST IDLER CLEARANCE 4-26
REVERSE AND REPLACE THE END BITS AND CUTTING EDGES 4-28
CLEAN, CHECK RADIATOR FINS 4-29
CLEAN FUEL TANK STRAINER 4-29
DRAIN WATER AND SEDIMENT IN FUEL TANK 4-30
CLEAN STEERING CLUTCH CASE BREATHER 4-30
REPLACE AIE CONDITIONER BELT 4-30
CLEAN, CHECK HYDRAULIC COOLER FINS 4-30
CHECK UNDERCARRIAGE OIL 4-31
CLEAN AIR CONDITIONER AIR FILTER(FRESH/RECIRC FILTER) 4-32
CHECK, ADJUST AIR CONDITIONER 4-32
LUBRICATE DOOR HINGE 4-33
CHECK DOOR LATCH 4-34
CHECK DOOR LOCK STRIKER 4-34
REPLACE DOOR DAMPER 4-34
CHECK WINDOW WASHER FLUID LEVEL, ADD FLUID 4-35
REPLACE WIPER BLADE 4-35
BLEEDING AIR IN HYDRAULIC SYSTEM 4-36
CHECK ELECTRICAL INTAKE AIR HEATER 4-36
LUBRICATING 4-36

CHECK BEFORE STARTING

EVERY 250 HOURS SERVICE

LUBRICATING 4-38
CHECK ALTERNATOR DRIVE BELT TENSION, ADJUST 4-40
CHECK LEVEL OF BATTERY ELECTROLYTE 4-41
CHECK BRAKE PERFORMANCE 4-43
CHECK OIL LEVEL IN DAMPER CASE, ADD OIL 4-44

EVERY 500 HOURS SERVICE

CHANGE OIL IN ENGINE OIL PAN, REPLACE ENGINE OIL FILTER CARTRIDGE AND BYPASS FILTER CARTRIDGE 4-45
REPLACE FUEL FILTER CARTRIDGE 4-46
REPLACE POWER TRAIN OIL FILTER ELEMENT, STEERING LUBRICATING OIL FILTER ELEMENT 4-47
CHECK OIL LEVEL IN FINAL DRIVE CASE, ADD OIL 4-48
REPLACE HYDRAURIC TANK BREATHER ELEMENT 4-48

https://truckmanualshub.com/

EVERY 1000 HOURS SERVICE

CHANGE OIL IN POWER TRAIN CASE, WASH STRAINERS(POWER TRAIN PUMP STRAINER, SCAVENGING PUMP STRAINER) 4-49
CHECK, CLEAN FUEL STRAINER 4-51
REPLACE CORROSION RESISTOR CARTRIDGE 4-52
CHECK TIGHTENING PARTS OF TURBOCHARGER 4-52

EVERY 2000 HOURS SERVICE

CHANGE OIL IN HYDRAULIC TANK, REPLACE HYDRAULIC OIL FILTER ELEMENT, CLEAN HYDRAULIC TANK STRAINER 4-53
CHANGE OIL IN FINAL DRIVE CASE 4-54
CHANGE OIL IN DAMPER CASE, CLEAN DANPER BREATHER 4-55
CHECK PIVOT BEARING OIL LEVEL, ADD OIL 4-56
CLEAN ENGINE BREATHER ELEMENT 4-56
CHECK ALTERNATOR, STARTING MOTOR 4-56
CHECK INJECTOR 4-56
CHECK VIBRATION DAMPER 4-56
CLEAN, CHECK TURBOCHARGER 4-56
CHECK PLAY OF TURBOCHARGER ROTOR 4-56
CHECK ENGINE VALVE CLEARANCE, ADJUST 4-57

EVERY 4000 HOURS SERVICE

CHECK WATER PUMP 4-58
CHECKING FOR LOOSENESS OF HIGH-PRESSURE CLAMP, HARDENING OF RUBBER 4-58
CHECKING FOR MISSING FUEL SPRAY PREVENTION CAP, HARDENING OF RUBBER 4-59
REPLACE INJECTOR ASSEMBLY 4-59
CHECK MAIN FRAME, WORK EQUIPMENT (BLADE, RIPPER) 4-60

EVERY 8000 HOURS SERVICE

REPLACE HIGH-PRESSURE PIPING CLAMP 4-61
REPLACE FUEL SPRAY PREVENTION CAP 4-61

https://truckmanualshub.com/

SERVICE PROCEDURE

INITIAL 250 HOURS SERVICE(ONLY AFTER THE FIRST 250 HOURS)

Carry out the following maintenance only after the first 250 hours.

- Change oil in hydraulic tank, replace hydraulic oil filter element, clean hydraulic tank strainer
- Change oil in final drive case

For details of the method of replacing or maintaining, see the section on EVERY 2000 HOURS SERVICE.

WHEN REQUIRED

CLEAN INSIDE OF COOLING SYSTEM

⚠ WARNING

- **Immediately after the engine is stopped, the coolant is at a high temperature and the radiator is under high internal pressure. If the cap is removed to drain the coolant in this condition, there is a hazard of burns. Wait for the temperature to go down, then turn the cap slowly to release the pressure before removing it.**
- **Cleaning is carried out with the engine running. When standing up or leaving the operator's seat, set the safety lock lever and the parking lever to the LOCK position.**
- **For details of starting the engine, see “CHECK BEFORE STARTING ENGINE, ADJUST (3-55)“ and “STARTING ENGINE (3-71)“ in the OPERATION section.**
- **Never enter front the machine when the engine is running.**
- **There is danger of touching the fan.**

Clean the inside of the cooling system, change the coolant and replace the corrosion resistor according to the table below.

Kind of coolant	Cleaning inside of cooling system and changing coolant	Replacing corrosionÅresistor
Permanent type antifreeze (All season type)	Every year (autumn) or every 2000 hours, whichever comes first	Every 1000 hours and when cleaning the inside of the cooling system and when changing coolant
Non permanent type antifreeze containing ethylene glycol (winter, one season type)	Every 6 months (spring, autume) (Drain antifreeze in spring, add antifreeze in autumn)	
When no using antifreeze	Every 6 months or every 1000 hours, whichever come first	

Stop the machine on level ground when cleaning or changing the coolant.
Use a permanent type of antifreeze.
If, for some reason, it is impossible to use permanent type antifreeze, use an antifreeze containing ethylene glycol.
Super Coolant (AF-ACL) has an anti-corrosion effect as well as an antifreeze effect.
The ratio of antifreeze to water depends on the ambient temperature, but to obtain the corrosion resistance effect, a minimum ratio of 30% by volume is necessary.
When deciding the ratio of antifreeze to water, check the lowest temperature in the past, and decide from the mixing rate table given below.
It is actually better to estimate a temperature about 10°C lower when deciding the mixing rate.

https://truckmanualshub.com/

Mixing rate of water and antifreeze

Min. atmospheric temperature	°C	- 10	- 15	- 20	- 25	- 30
Amount of anti-freeze	liters	39.0	46.7	53.2	59.7	65.0
Amount of water	liters	91.0	83.3	76.8	70.3	65.0

WARNING

Antifreeze is flammable, so keep it away from flame.
Antifreeze is toxic. When removing the drain plug, be careful not to get water containing antifreeze on you. If it gets in your eyes, flush your eyes with large amount of fresh water and see a doctor at once.

Use city water for the cooling water.
If river water, well water or other such water supply must be used, contact your Komatsu distributor.
We recommend use of an antifreeze density gauge to control the mixing proportions.

WARNING

When removing the drain plug, be careful not to be covered with the drained coolant.

1. Stop the engine, wait for the coolant to cool completely, then turn valve (2) of corrosion resistor (1) to the Close stopper position.

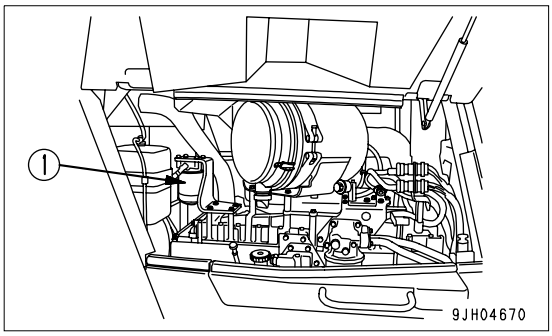

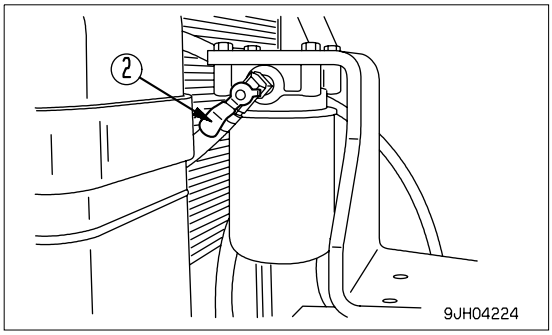

2. Turn main radiator cap (3) slowly, and remove.

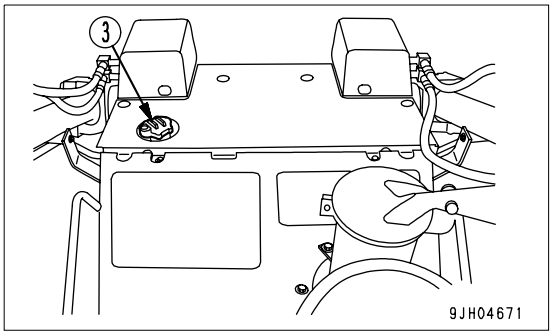

https://truckmanualshub.com/

3. Prepare a container to catch the coolant, pull out hose (4) of the main radiator at the bottom front right of the machine, then open drain valve (5) and drain the water.
4. Open the drain valve (6) in the water pump piping on the right side of the engine, and drain the water.
5. After draining, close up drain valve (5), (6) and pour in clean water up to the vicinity of the water filler.
6. When the radiator is full of water, open drain valves (5), (6), then start the engine and run at low idling. Continue to run the engine at low idling and flush the radiator for 10 minutes.
   While flushing with water, adjust the input flow and drain flow of water so that the radiator remains full during the flushing operation. During the flushing operation, take care that the filler hose does not come out from the radiator cap water from the port.
7. After washing the cooling system, stop the engine. Drain water and close drain valve (5), (6).
8. After draining the water, flush the system with a flushing agent.
9. After flushing, open drain valve (5), (6), completely drain all the water, then close the drain valve and drain plug, and fill with city water up to near the filler port.
10. When the tank is filled to near the water filler port, open drain valve (5), (6), start the engine, run at low idling, and continue the flushing operation until clean water comes out.

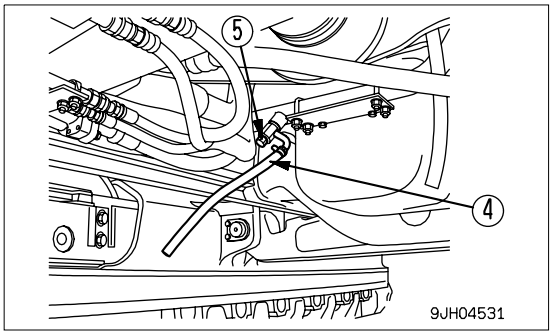

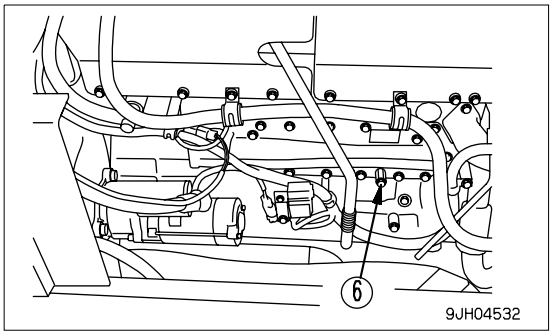

11. When clean water comes out, stop the engine and close drain valve (5), (6).
12. Replace the corrosion resistor, then open each valve (3).
    For details of the procedure for replacing the corrosion resistor, see “REPLACE CORROSION RESISTOR CARTRIDGE (4-52)“.
13. Add city water until the water overflows from the water filler port.
14. To remove the air in the cooling system, run the engine for 5 minutes at low idling, and for another 5 minutes at high adling. (When doing this, leave the radiator cap off.)
15. Open cap (7) at the top of the coolant reserve tank, then add water to the specified level. For details, see “CHECK COOLANT LEVEL, ADD WATER (3-57)“.
16. Stop the engine, wait for 3 minutes, add city water until the water level reaches near the water filler port, then tighten the cap (3).

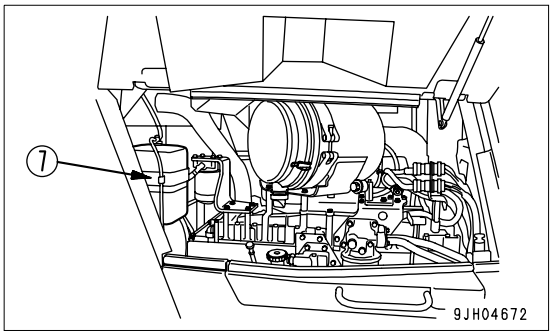

CHECK, CLEAN AND REPLACE AIR CLEANER ELEMENT

⚠ WARNING

- **Always wear protective glasses,dust mask,or other protective equipment.**
- **When removing the air cleaner element from the air cleaner body,it is dangerous to pull it out by force.**
- **When working at high places or where the foothold is poor, be careful not to fall because of the reaction when pulling out the outer element.**

https://truckmanualshub.com/

CHECKING

If the internal yellow piston overlaps the red zone on the outside diameter of dust indicator (1), clean the air cleaner element.
After cleaning, press the reset button to reset the piston.

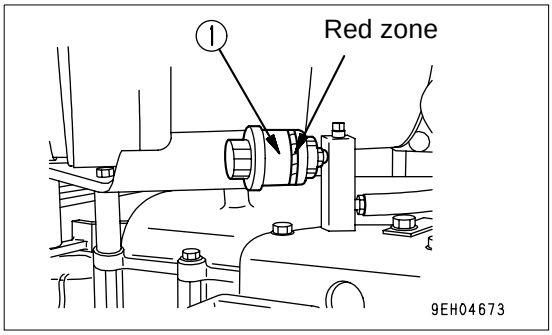

NOTICE
Always wait for the yellow piston in the dust indicator to overlap the red zone on the outside before cleaning the element.
If the element is cleaned frequently before the yellow piston in the dust indicator overlaps the red zone on the outside, the air cleaner will be unable to display its normal performance and the cleaning effect will become poor.
In addition, the frequency of dust stuck to the element falling inside the inner element during the cleaning operation will increase.

CLEANING OR REPLACING OUTER ELEMENT

NOTICE
Before and after cleaning the element, do not leave or keep it in direct sunlight.

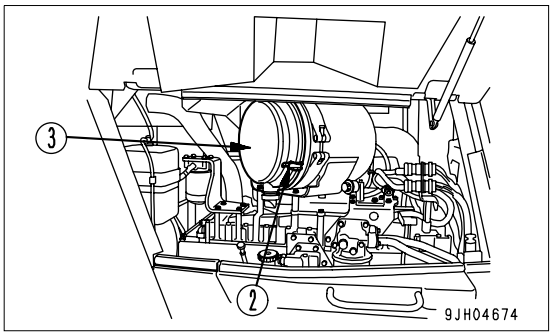

1. Remove 3 hooks (2) , then remove cover (3).
   Remove outer element.
2. Hold the outer element, rock it lightly up and down and to the left and right, and rotate the element to the left and right to pull it out.

NOTICE
- **Never remove the inner element. It will allow dirt to enter and cause failure of the engine.**
- **Do not use a screwdriver or other tool.**

3. After removing the outer element, cover the air connector inside the air cleaner body with a clean cloth or tape to prevent dirt or dust from entering.

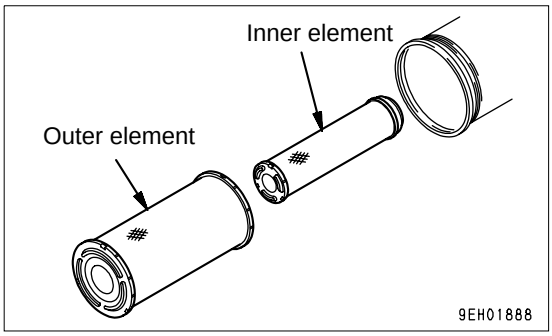

4. Use a clean cloth or brush to remove the dirt stuck to the cover and the inside of the air cleaner body.
5. Direct dry compressed air (Max. 0.69 MPa (7 kgf/cm2, 99.4 PSI)) from the inside of the outer element along its folds. Then direct the compressed air from the outside along the folds, and again from the inside.
   1) Check that the inner element is not loose. If it is loose, insert it securely.
   2) If the yellow piston overlaps the outer element red zone immediately after the outer element is cleaned, replace the inner and outer elements.
6. Remove the cloth or tape cover installed in Step 3.
7. If small holes or thinner parts are found on the element when it is checked with an electric bulb after cleaning and drying, replace the element.

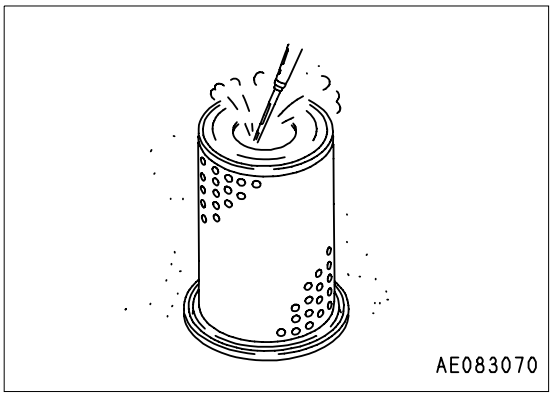

https://truckmanualshub.com/

NOTICE

- **Do not use an element whose folds or gasket or seal are damaged.**
- **When cleaning the element, do not hit it or beat it against something.**

8. After replacing the element, press the dust indicator button to reset it.
   The yellow piston will return to its original position.

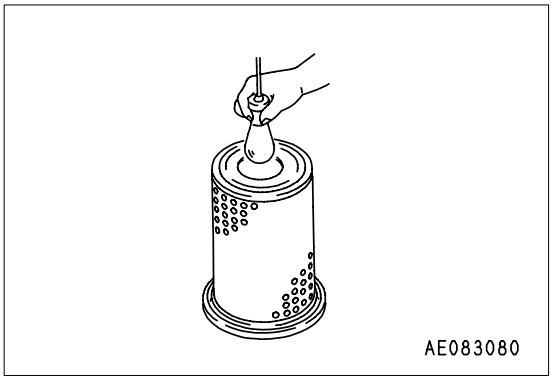

REPLACING INNER ELEMENT

1. First remove the outer element, and then remove the inner element.
2. Cover the air connector side (outlet side) with a clean cloth or tape.
3. Clean the air cleaner body interior, then remove the cover installed in Step 2.
4. Fit a new inner element to the connector.
   Do not clean and reinstall a inner element.
5. Install the outer element and the cover.

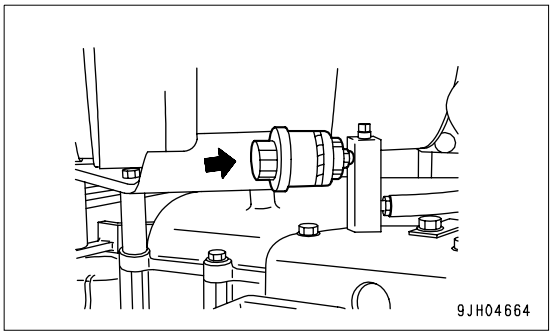

https://truckmanualshub.com/

CHECK TRACK TENSION

The wear of pins and bushings on the undercarriage will vary with the working conditions and types of soil. It is thus necessary to continually inspect the track tension so as to maintain the standard tension.
Carry out the check and adjustment under the same conditions as when operating (on jobsites where the track becomes clogged with mud, measure with the track clogged with mud).

INSPECTION

Stop the machine on level ground (stop with the transmission in FORWARD without applying the brake). Then place a straight bar on the track shoes between the carrier roller and the idler as shown in the figure, and measure the clearance between the bar and the grouser at the midpoint. If the clearance (A) is 20 to 30 mm, the tension is standard.
If the track tension is not at the standard value, adjust it in the following manner.

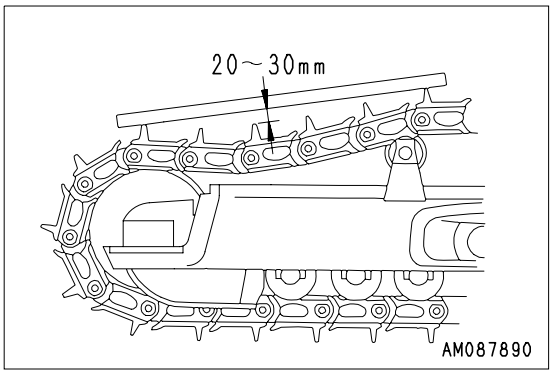

ADJUSTMENT

⚠ WARNING

Grease inside adjusting mechanism is under high pressure. Grease coming from lubricator (1) under pressure can penetrate the body causing injury or death.
For this reason, do not loosen lubricator (1) more than one turn. Do not loosen any part other than lubricator (1). Furthermore, do not get any part of your body in front of the grease fitting.
If the track tension is not relieved by this procedure, please contact your Komatsu distributor.

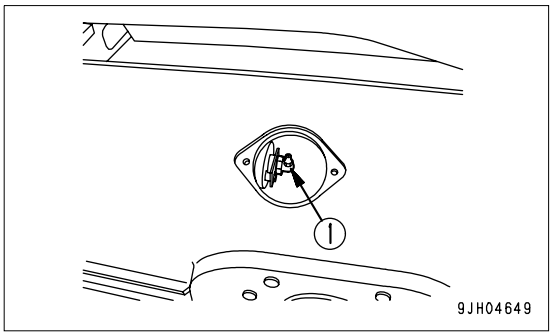

WHEN INCREASING TENSION

1. Pump in grease through grease fitting (2) with a grease pump.
2. To check that the correct tension has been achieved, move the machine backwards and forwards.
3. Check the track tension again, and if the tension is not correct, adjust it again.
4. Continue to pump in grease until (S) becomes 0 mm. If the tension is still loose, the pin and bushing are excessively worn, so they must be either turned or replaced. Please contact your Komatsu distributor.

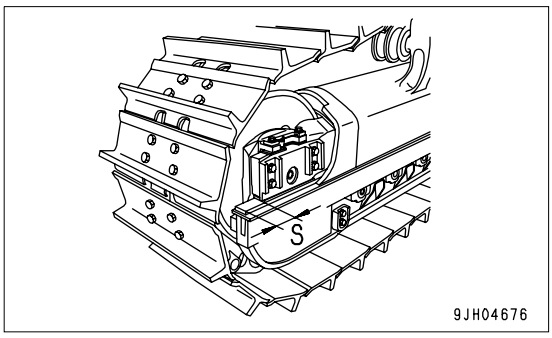

https://truckmanualshub.com/

WHEN LOOSENING TENSION

WARNING

It is extremely dangerous to release the grease by any method except the procedure given below. If the track tension is not relieved by this procedure, please contact your Komatsu distributor.

1. Loosen lubricator (1) gradually to release the grease.
2. Turn lubricator (1) a maximum of one turn.
3. If the grease does not come out smoothly, move the machine forwards and backwards a short distance.
4. Tighten lubricator (1).
5. To check that the correct tension has been achieved, move the machine backwards and forwards.
6. Check the track tension again, and if the tension is not correct, adjust it again.

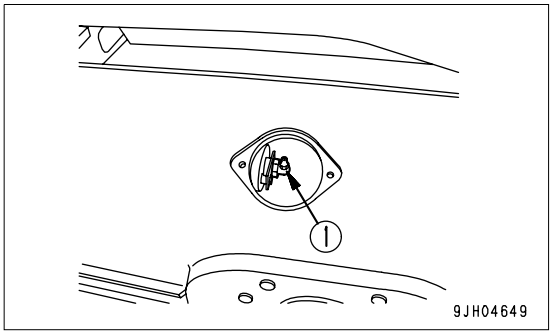

WHEN REMOVING TRACK

WARNING

Depending on the situation, the operation to remove the track may be extremely dangerous.
Before removing the track, if the procedure above "WHEN LOOSENING TENSION (4-25)" does not loosen the track tension, please contact your Komatsu distributor for repair.

CHECK AND TIGHTEN TRACK SHOE BOLTS

If the machine is used with track shoe bolts being loose, they will break, so tighten any loose bolts immediately.

METHOD OF TIGHTENING SHOE BOLT

1. First, tighten to the tightening torque below, then check that the nut and shoe are in close contact with the link mating surface.
   - D85EX: 343 ± 39 N·m (35 ± 4 kgf·m)
   - D85PX: 539 ± 49 N·m (55 ± 5 kgf·m)
2. After checking, tighten a further 120° ± 10°.

METHOD OF TIGHTENING MASTER LINK CONNECTING BOLT

1. First tighten to a tightening torque of 343 ± 39 N·m (35 ± 4 kgf·m) then check that the link contact surfaces are in close contact.
2. After checking, tighten a further 160° to 180°.

ORDER FOR TIGHTENING

Tighten the bolts in the order shown in the diagram on the right.

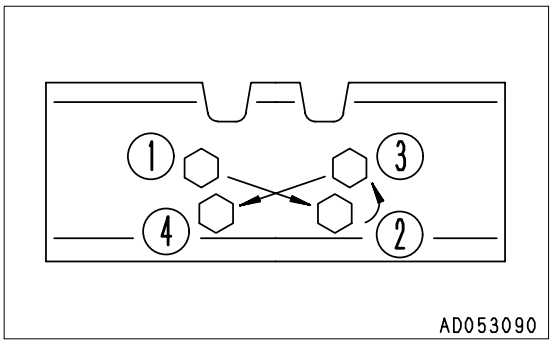

https://truckmanualshub.com/

ADJUST IDLER CLEARANCE

The idler moves forward and backward under external pressure when this happens, side guide and guide plate become worn.

As they become worn, there is side play in the idler, or the idler turns at an angle, causing the track to come off or resulting in uneven wear, so adjust as follows.

ADJUSTING IN SIDEWAYS DIRECTION

1. Drive the machine for 8 to 12 m on flat ground, then measure clearance A (4 places: left, right, inside outside) between the track frame and side guide (1).
2. If clearance A is more than 4 mm, remove bolt (1), then take out shim, and adjust to that the clearance on one side is less than 0.5 to 1 mm.

REMARK

There are two types of shim (thickness: 0.5 mm and 1.0 mm).

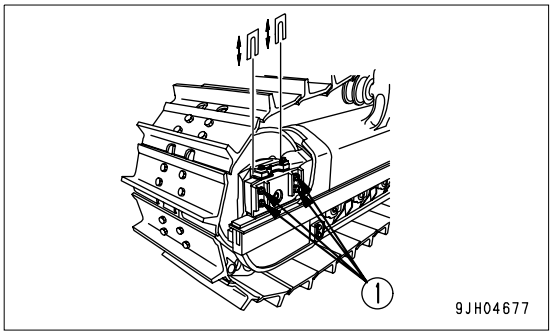

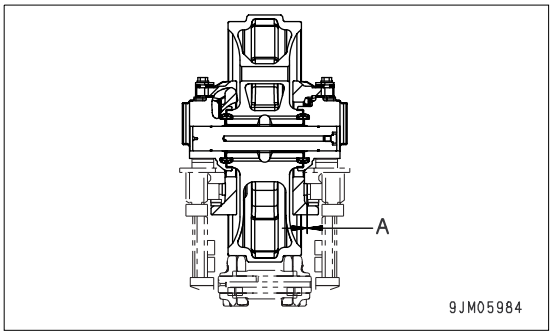

https://truckmanualshub.com/

ADJUSTING IN VERTICAL DIRECTION

1. To determine the amount of adjustment, measure clearance B, then subtract 2 mm and record the result (amount of adjustment).

   Example
   If clearance B = 5 mm:
   Amount of adjustment = 5 - 2 = 3 mm

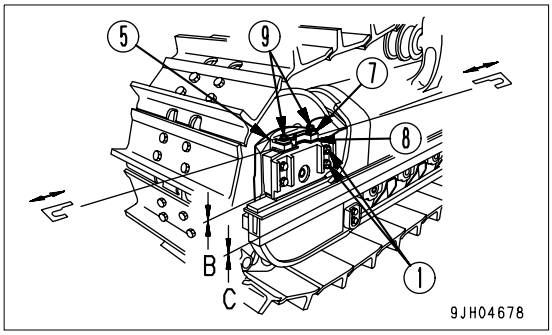

2. Loosen bolts (9) (inside, outside: Total 4) to a point where there is no more reaction from the spring.
3. Loosen bolt (1) (inside, outside: Total 8) . When doing this, do not loosen it more than 3 turns.
4. Using a bar, pull up up-down guide (5) to set clearance C to 0, then remove shims of a thickness equal to the amount of adjustment measured in Step 1.
5. After removing shims (7), add them on top of shim (8).
   (Left, right, inside, outside: Total 8 places)
   When doing this, check that the total thickness of shim (7) and shim (8) is the same after adjustment as it was before adjustment at all places.
   Discarding shims or adding shims will result in improper function of the built-in spring.

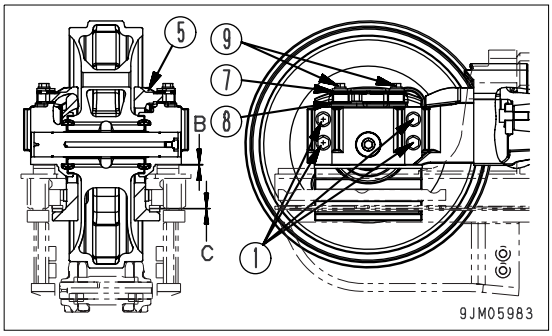

REMARK
There are two types of shim thickness: 1 mm and 2 mm.

https://truckmanualshub.com/

REVERSE AND REPLACE THE END BITS AND CUTTING EDGES

WARNING

It is dangerous if the work equipment moves by mistake when the cutting edges and end bits are being reversed or replaced.
Set the work equipment in a stable condition, then stop the engine and lock the blade control lever securely with the safety lever.

Reverse or replace the end bits and cutting edges before it is worn out to the blade end.

1. Raise the blade to a proper height and apply a block to the frame so as to prevent fall of the blade.
2. Operate the safety lock lever to the LOCK position.
   If the cutting edge and the end bit on both sides are worn out, replace with new one.
   If it has been worn out up to the fitting surface, repair the fitting surface and then reverse or replace.
3. Loosen nut (1) and remove bolt (2). Then remove the cutting edge and the end bit and clean the mounting surface.
4. Reverse or replace the cutting edge and the end bit when worn out.
   If bolt (1) and nut (2) are damaged, replace them with new ones at the same time.
5. Install the edge to the blade, then tighten partially. Drop the blade three to five times on to the ground or rock to remove any play in bolt (2), then tighten it to the correct tightening torque. When installing end bit (3), put top surface (4) of the end bit in close contact with stopper (5), then tighten with the bolts.
   Tightening torque: 628 ± 79 N·m (64 ± 8 kgf·m)
6. After several hours of running, retighten the nuts.

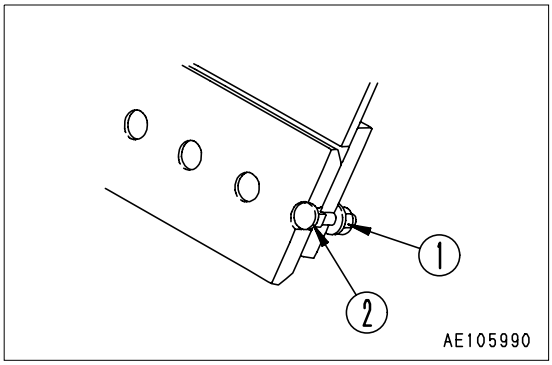

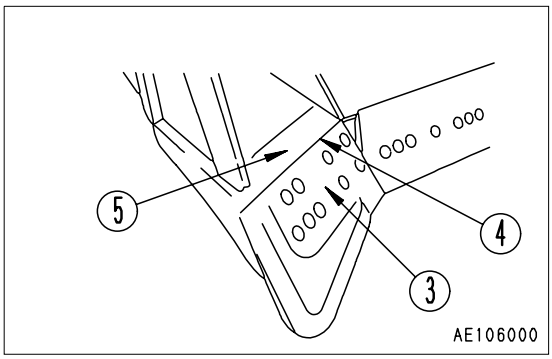

https://truckmanualshub.com/

CLEAN, CHECK RADIATOR FINS

WARNING

For the cleaning and check, stop the engine without fail and confirm that the fan is not rotating, and carry out the work.
Be sure to close the radiator grille before turning the radiator fan so that no one will touch the turning fan carelessly.

When the radiator fin block with mud, dirt or leaves, clean it as follows.

1. Remove bolts (1) at the four corners of the radiator fins, then open radiator grill (2).

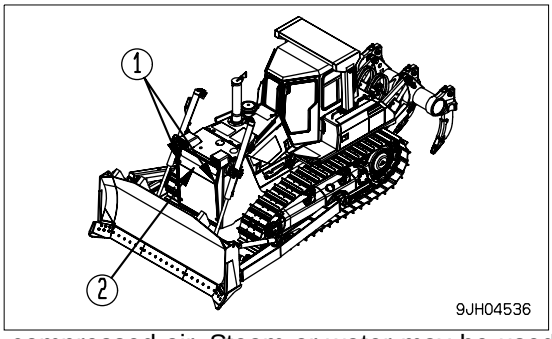

2. Clean the radiator fins clogged with mud, dust and leaves with compressed air. Steam or water may be used instead of compressed air.

REMARK
Check the rubber hose. If the hose is found to have cracks to be hardened by ageing, replace such hose with new one. Further, loosen hose clamp should also be checked.

When cleaning the radiator fins, reverse the rotation of the fan and change the direction of the air flow. Set the Fan rotation selector switch to the CLN position (C) and start the engine. The fan rotates at 100% speed in reverse and cleans the fins. The Fan rotation selector switch cannot be operated when the engine is running.

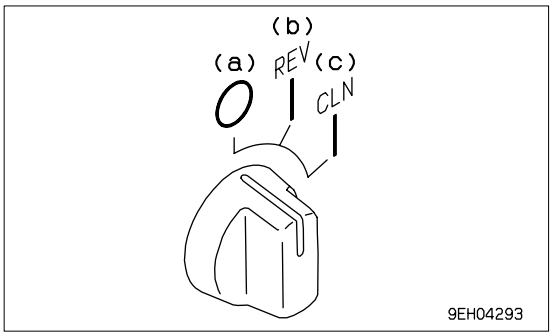

REMARK
If dirt is caught in the radiator fins, blow with compressed air to clean.

CLEAN FUEL TANK STRAINER

Clean the strainer if there is any dirt collected in it.
Remove the filler cap (1) of the fuel tank and take out strainer.
If the strainer is dirty, clean it with diesel fuel.

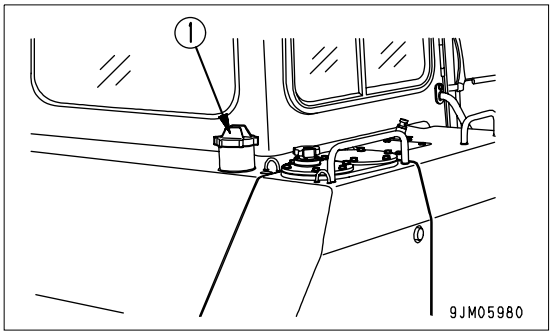

https://truckmanualshub.com/

DRAIN WATER AND SEDIMENT IN FUEL TANK

Carry out this procedure after the mchine has been at rest for a long time and after a long spell of rainy days.
Loosen valve (1) at the bottom of the tank and drain sediment accumulated on the bottom together with mixed water and fuel.

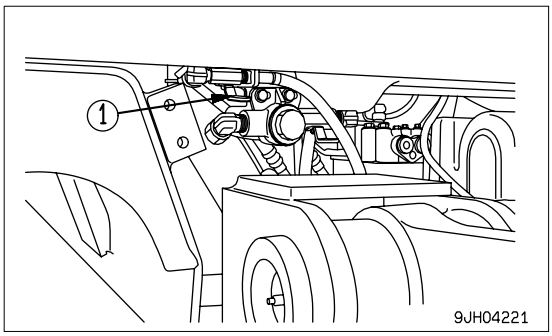

CLEAN STEERING CLUTCH CASE BREATHER

1. Open the valve cover.
2. Remove the bolts, then remove cover (1).
3. Remove breather (2) at the side of the hydraulic tank, remove the dirt stuck to the breather, then wash it in clean diesel oil or flushing oil.

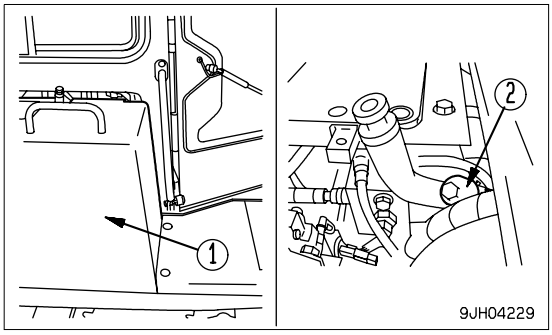

REPLACE AIR CONDITIONER BELT

1. Loosen 4 bolts (1) and jack bolt (2), then move compressor (3) to the side.
2. Replace the V-belt.
   - When adjusting the V-belt, do not push the compressor directly with the bar. Use jack bolt (2).
3. Tighten jack bolt (2) and bolts (1), and apply tension to the V-belt. The standard deflection for the belt is approx. 10 mm when pressed with a finger force of approx. 6 kg at a point midway between the air conditioner compressor pulley and fan pulley.

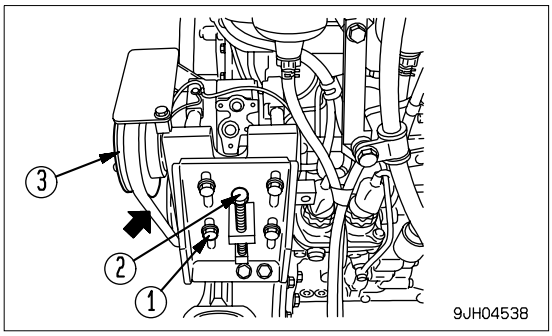

CLEAN, CHECK HYDRAULIC COOLER FINS

If the hydraulic cooler fins are clogged or there is dirt caught in the fins, clean and check the fins.

1. Open the radiator mask.
2. Use compressed air to remove the mud, dirt, and leaves clogging the hydraulic cooler fins. Steam or water may be used instead of compressed air.

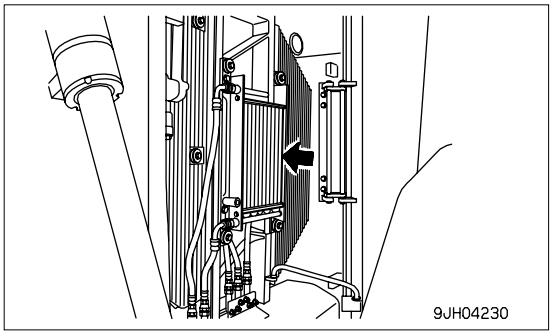

REMARK

Check the rubber hose. If the hose is found to have cracks to be hardened by ageing, replace such hose with new one. Further, loosen hose clamp should also be checked.

https://truckmanualshub.com/

CHECK UNDERCARRIAGE OIL

Stop the machine on level ground, and check for any reduction in the oil at the idler (portion P), track roller (portion Q), and carrier roller (portion R).

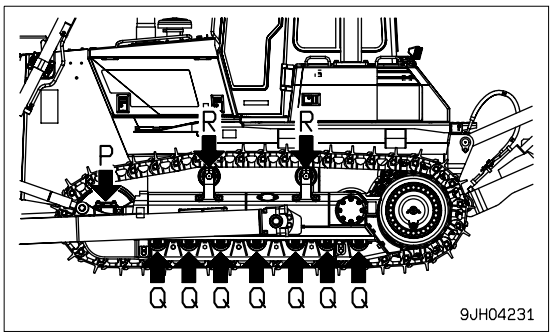

1. Loosen seal bolt (1) slowly and check if oil oozes out from the thread. If oil oozes out, the oil level has not gone down, so tighten the bolt.
2. If no oil comes out even when seal bolt (1) is removed, the oil level is low, so please contact your Komatsu distributor for repair.

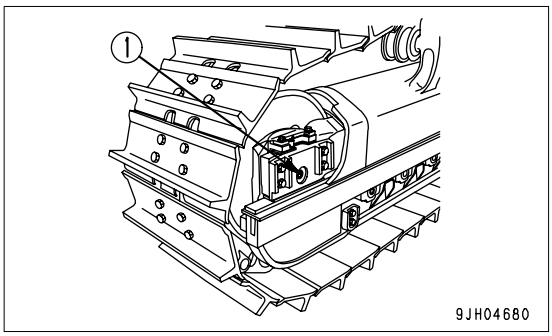

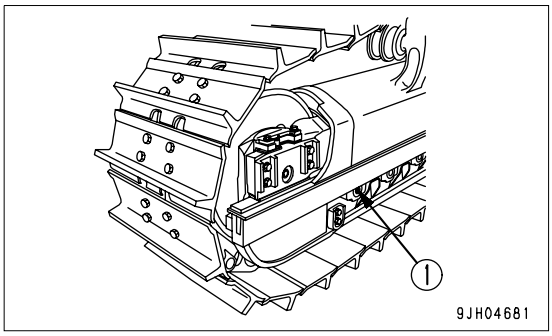

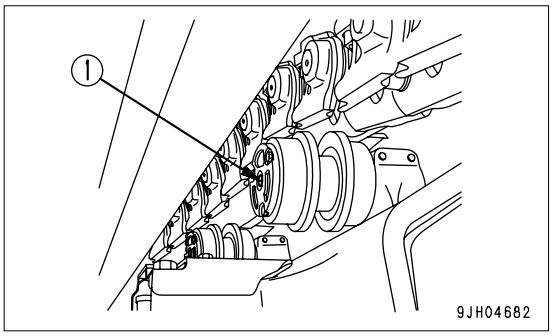

https://truckmanualshub.com/

CLEAN AIR CONDITIONER AIR FILTER(FRESH/RECIRC FILTER)

Clean the air conditioner air filter if it becomes clogged or if there is dirt or oil stuck to it.

1. Open inspection cover (1) on top of the hood, then remove pressure air filter (2).
2. Open inspection cover (3) under the front panel and pull up recirculation air filter (4) to remove it.
3. Clean filters (2) and (4) with compressed air. If there is oil stuck to the filter, or it is extremely dirty, wash it in a neutral agent.
   After washing it, dry it completely before installing it again.

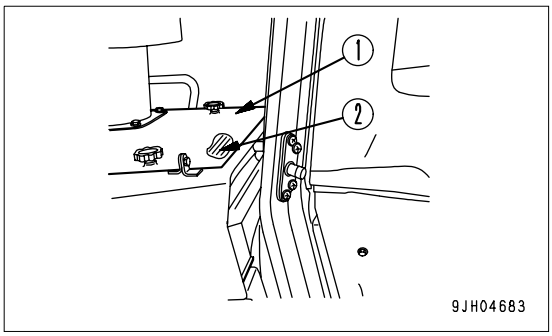

REMARK

If the filters cannot be cleaned with air or in water, replace them with new ones.

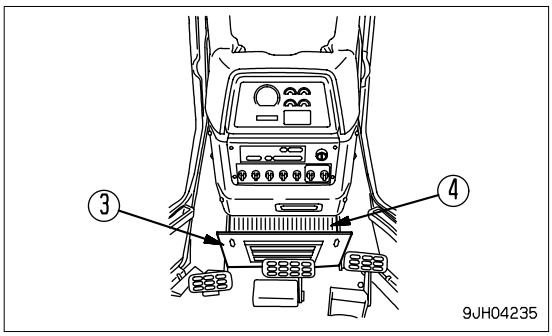

CHECK, ADJUST AIR CONDITIONER

CHECK TENSION OF COMPRESSOR BELT

If the belt is loose, it will slip and the cooling effect will be reduced. From time to time, press a point midway between the drive pulley and compressor pulley with your finger (approx. 6 kg) and check that the tension is 15 to 18 mm.
When the belt is new, there will be initial elongation, so always adjust again after 2 or 3 days.

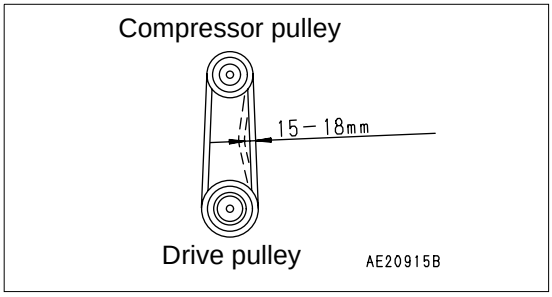

https://truckmanualshub.com/

CHECK LEVEL OF REFRIGERANT (GAS)

⚠ WARNING

- **When handling refrigerant gas, always follow local laws and regulations.**
- **The refrigerant used in the cooler is colorless and odorless and does not harm the atmosphere, but if the liquid gets into your eyes or on your hands, it may cause loss of sight or frostbite, so never loosen any part of the refrigerant circuit.**

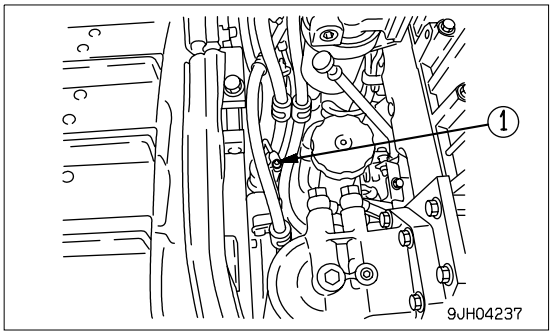

If the level of the refrigerant (gas) is low, the cooling effect will be reduced. Run the engine at high idling, and check the flow of the refrigerant in the refrigerant circuit through the sight glass of the receiver (1) when the cooler is running at high speed.

- No bubbles in refrigerant flow: Suitable (A)
- Some bubbles in flow (bubbles pass continuously): Lack of refrigerant (B)
- Colorless, transparent: No refrigerant (C)

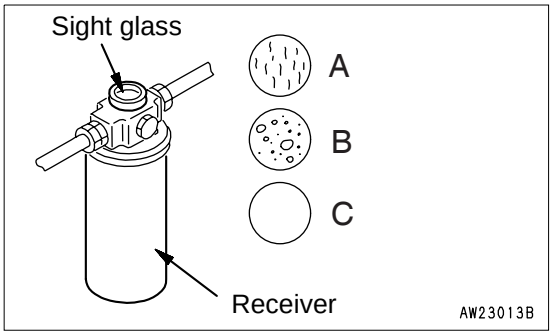

REMARK

- **When there are bubbles, the refrigerant gas level is low, so contact your refrigerant dealer to have refrigerant added. If the air conditioner is run with the refrigerant gas level low, it will cause damage to the compressor.**
- **New Freon R134a is used as the refrigerant.**

LUBRICATE DOOR HINGE

If the door makes a squeaking noise when it is opened or closed, spray lubricant in through the split in the hinge bushing. If the bushing is worn, replace the hinge.

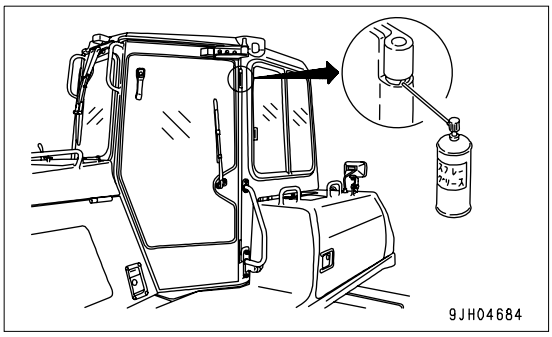

https://truckmanualshub.com/

CHECK DOOR LATCH

WARNING

If the control lever is touched by accident during checking, the machine moves off suddenly, and this may lead to serious injury or death.
Before checking door latch, stop the engine and set the parking lever securely to the LOCK position.

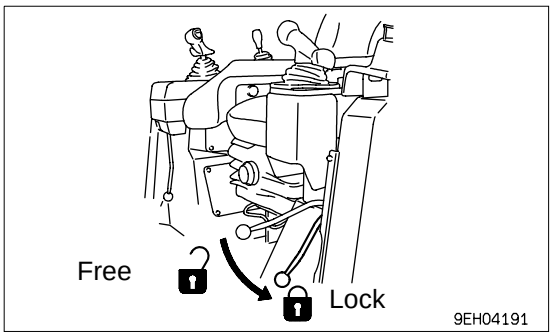

Check
Hold the door open-locked, and check that there is still grease inside the latch. If the amount of grease is low or there is no more grease, coat the inside of the latch with grease from portion (1).

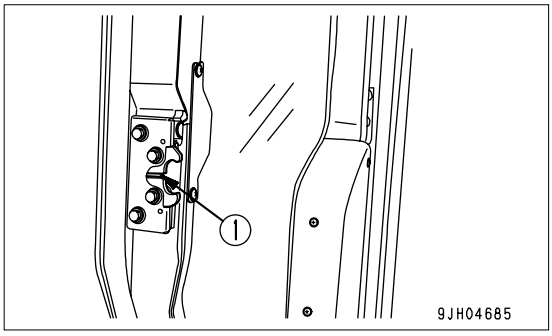

REMARK
If there is no more grease inside the latch, the movement will become poor because of dust inside the latch, and the handle may be stiff when opening the door.

CHECK DOOR LOCK STRIKER

If the wear of the door lock striker exceeds 0.5 mm, replace the striker. If it is used at it is, the play will increase and this may result in breakage of the hinge or door lock.

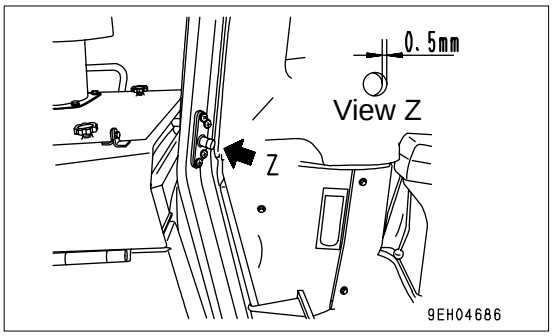

REPLACE DOOR DAMPER

If the depth of the door damper rubber groove is less than 2 mm, replace the damper.
There are two dampers each at the top and bottom on the left and right doors.

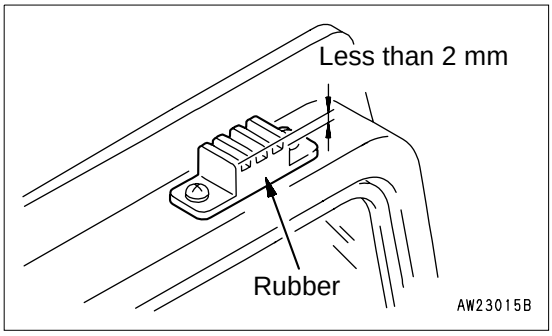

https://truckmanualshub.com/

CHECK WINDOW WASHER FLUID LEVEL, ADD FLUID

If there is air in the window washer fluid, check the level and add fluid.
Open the battery cover, check the level of the fluid in window washer tank (1), and if it is low, add automobile window washer fluid.
When adding fluid, be careful not to let any dust get in.

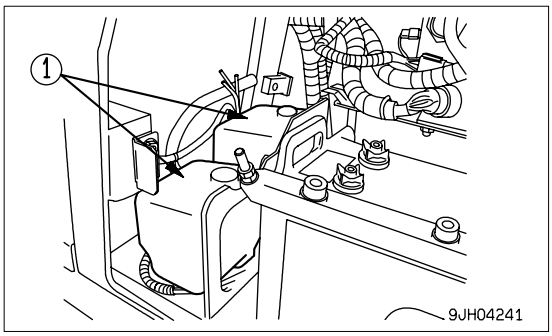

REPLACE WIPER BLADE

If the blade is damaged, it will not wipe the window clean, so replace the blade.

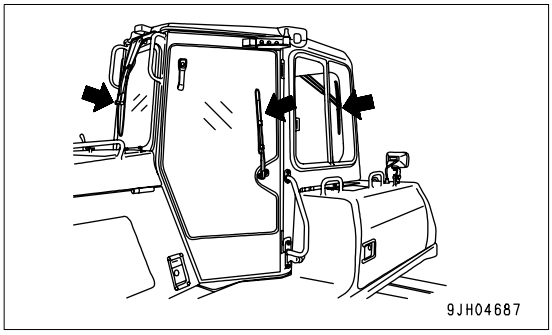

REPLACEMENT

FRONT, REAR WIPER

1. It is hooked at portion (A), so move the blade in the direction of the arrow to remove it.
2. Install the new blade and hook it securely.

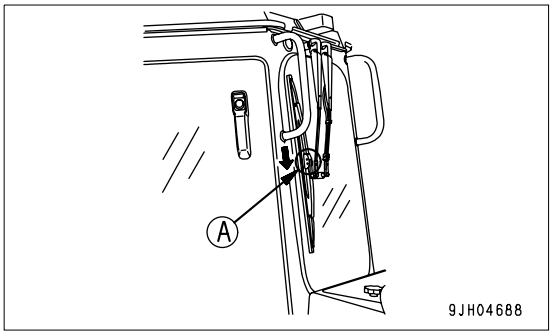

REAR WIPER

1. Remove E-ring(1).
   The blade can then be removed.
2. Install a new blade, then install securely with E-ring (1).

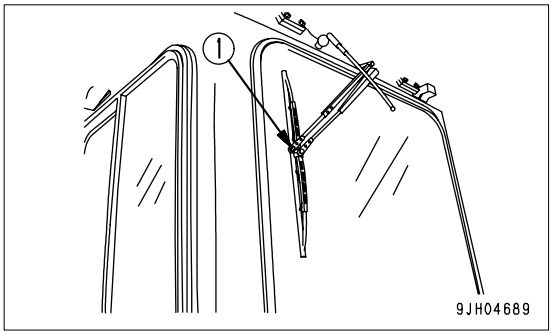

https://truckmanualshub.com/

DOOR WIPER

1. It is hooked at portion (A), so move the blade in the direction of the arrow to remove it.
2. Install the new blade and hook it securely.

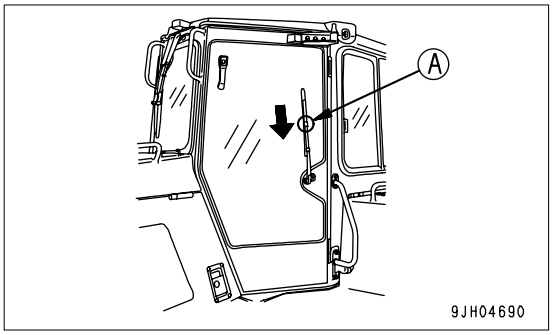

BLEEDING AIR IN HYDRAULIC SYSTEM

See “OPERATIONS AND CHECKS AFTER STARTING ENGINE (3-75)“.
Since the engine must be started and the blade must be operated, see OPERATION.

NOTICE

If the engine is run at high speed immediately after startup or a cylinder is pushed up to its stroke end, air taken inside the cylinder may cause damage to the piston packing.

1. Bleeding air from cylinders

   1) Run the engine at low idling, and extend and retract each cylinder 4 to 5 times, taking care so that a cylinder may not be brought up to its stroke end. (Stop the cylinder approx. 100 mm short of its stroke end)
   2) Next, operate each cylinder 3 to 4 times to the end of its stroke.
   3) Finally, operate each cylinder 4 to 5 times to the end of its stroke to completely remove the air.

CHECK ELECTRICAL INTAKE AIR HEATER

Check before the cold season starts (once a year).
Remove the electric heater from the engine intake manifold and check for wire disconnections and dirt clung to it.
When checking and installing the electric heater, replace its gasket with a new part.

LUBRICATING

1. Lower the work equipment to the ground, then stop the engine.
2. Using a grease pump, pump in grease through the grease fittings shown by arrows.
3. After greasing, wipe off any old grease that was pushed out.

Fuel control (1 place)

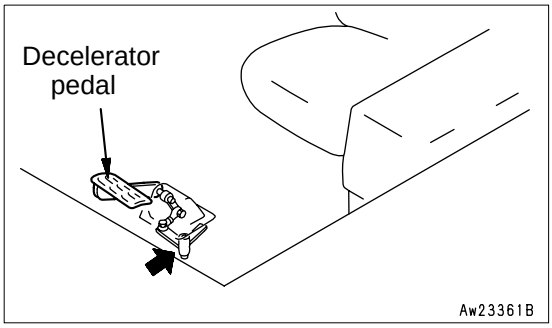

https://truckmanualshub.com/

CHECK BEFORE STARTING

For the following items, see “CHECK BEFORE STARTING (3-56)“.

- Checking with machine monitor
- Check coolant level, Add Water
- Check fuel level, add fuel
- Check oil level in engine oil pan, add Oil
- Check oil level in power train case, add oil
- Check brake pedal travel
- Check dust indicator
- Check oil level in hydraulic tank, add Oil
- Check electric wirings
- Check that lamps light up
- Check horn sound
- Check back-up alarm sound
- Check seat belt for wear or damage
- Adjust mirror
- Adjust joystick
- Adjust armrest

https://truckmanualshub.com/

EVERY 250 HOURS SERVICE

LUBRICATING

1. Lower the work equipment to the ground, then stop the engine.
2. Using a grease pump, pump in grease through the grease fittings shown by arrows.
3. After greasing, wipe off any old grease that was pushed out.

(1) Blade lift cylinder support yoke (4 places)

REMARK
These are at the front and rear of the left and right cylinders.

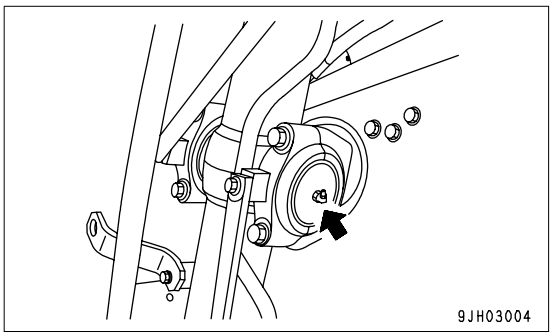

(2) Blade lift cylinder support shaft (2 places)

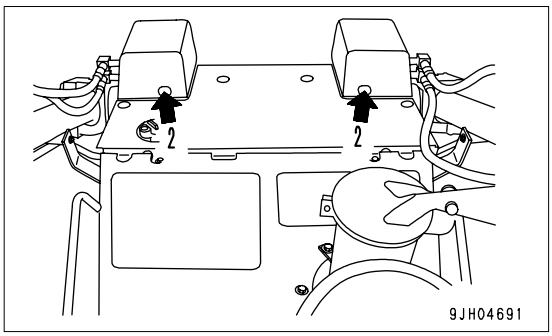

(3) Blade arm ball joint (4 places)
(4) Brace screw (2 places)

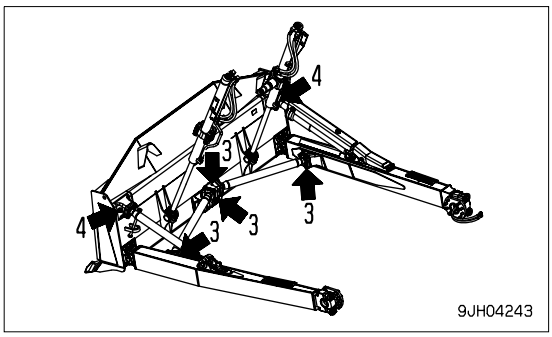

(5) Ripper lift cylinder bottom pin (2 places)
(6) Ripper lift cylinder rod end pin (2 places)
(7) Ripper arm pin (front) (6 places)
(8) Ripper arm pin (rear) (6 places)

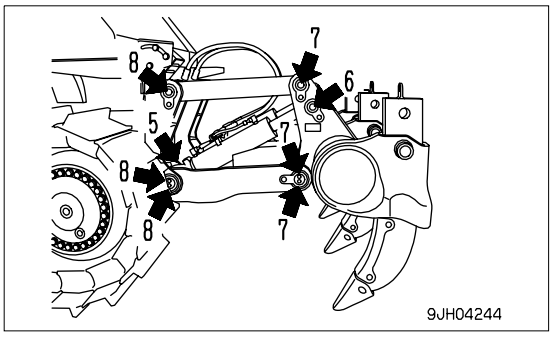

https://truckmanualshub.com/

(9) Equalizer bar side shaft (2 places)

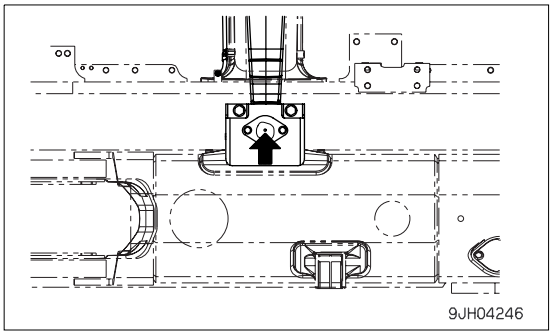

(10) Suspension (Equalizer bar center shaft) (1 place)

1) Carry out greasing of the suspension (equalizer bar center shaft) through the grease fittings marked by arrows.
2) Pump the greasing lever up and down 3 to 5 times.

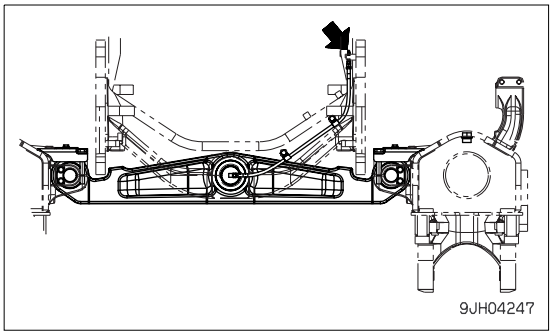

https://truckmanualshub.com/

CHECK ALTERNATOR DRIVE BELT TENSION, ADJUST

CHECKING

The standard deflection for the drive belt is approx.13 -16 mm when pressed by thumb (approx.10 kg) at a point midway between the drive pulley and alternator pulley.

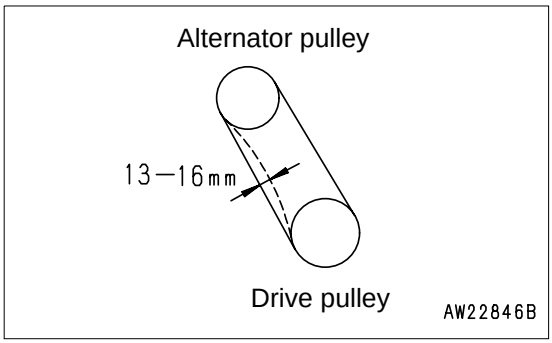

ADJUSTING

1. Loosen bolts (1) and nuts (2), (4), and (5), then turn nut (4) and adjust the belt tension.
2. After adjusting, tighten bolts and nuts (2), (4), and (5), to secure alternator (3) in position.
3. Reinstall the cover removed in step 1. Confirm that no part of the cover touches any turning part of the alternator.

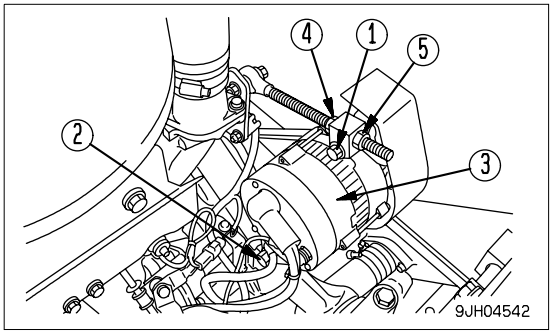

REMARK

- **Check each pulley for damage, wear of the V-groove, and wear of the V-belt. In particular, be sure to check that the V-belt is not touching the bottom of the V-groove.**
- **If any pulley is defective, ask your Komatsu distributor to replace it.**
- **If any belt has stretched and there is no allowance for adjustment, or if there are cuts or cracks on any belt, replace both belts at the same time.**
- **When adjusting the V-belt, do not push the tension pulley directly with a steel bar, etc., but put a wood piece, etc. between the pulley and bar.**
- **After replacing the V-belt, operate for 1 hour, then check and adjust the belt tension again.**

https://truckmanualshub.com/

CHECK LEVEL OF BATTERY ELECTROLYTE

Carry out this check before operating the machine.

⚠ WARNING

- **Do not use the battery if the battery electrolyte level is below the LOWER LEVEL line. This will accelerate deterioration of the inside of the battery and reduce the service life of the battery. In addition, it may also cause an explosion.**
- **The battery generates flammable gas and there is danger of explosion, so do not bring fire or sparks near the battery.**
- **Battery electrolyte is dangerous. If it gets in your eyes or on your skin, wash it off with a large amount of water and consult a doctor.**
- **When adding distilled water to the battery, do not allow the battery electrolyte to go above the UPPER LEVEL line. If the electrolyte level is too high, it may leak and cause damage to the paint surface or corrode other parts.**

NOTICE

When adding distilled water in cold weather, add it before starting operations in the morning to prevent the electrolyte from freezing.

Inspect the battery electrolyte level at least once a month and follow the basic safety procedures given below.

Open battery cover at the left side of the machine.

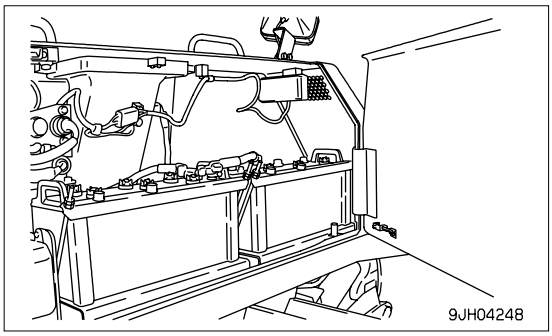

WHEN CHECKING ELECTROLYTE LEVEL FROM SIDE OF BATTERY

If it is possible to check the electrolyte level from the side of the battery, check as follows.

1. Use a wet cloth to clean the area around the electrolyte level lines and check that the electrolyte level is between the UPPER LEVEL (U.L.) and LOWER LEVEL (L.L.) lines.
   If the battery is wiped with a dry cloth, static electricity may cause a fire or explosion.

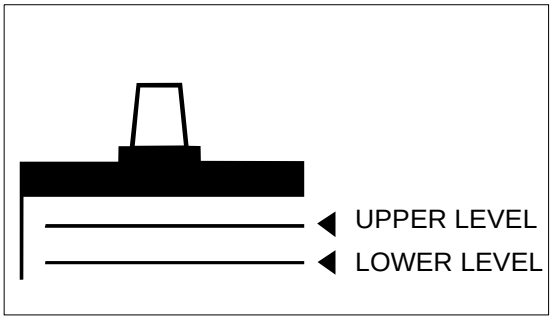

2. If the electrolyte level is below the midway point between the U.L and L.L lines, remove cap (1) and add distilled water to the U.L line.
3. After adding distilled water, tighten cap (1) securely.

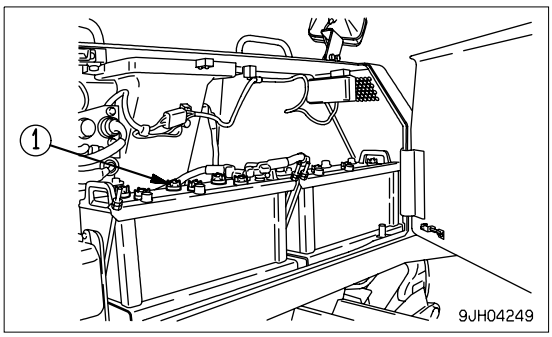

REMARK

If distilled water is added to above the U.L. line, use a syringe to lower the level to the U.L. line. Neutralize the removed fluid with baking soda (sodium bicarbonate), then flush it away with a large amount of water or consult your Komatsu distributor or battery maker.

https://truckmanualshub.com/

WHEN IT IS IMPOSSIBLE TO CHECK ELECTROLYTE LEVEL FROM SIDE OF BATTERY

If it is impossible to check the electrolyte level from the side of the battery, or there is no display of the UPPER LEVEL line on the side of the battery, check as follows.

1. Remove cap (1) at the top of the battery, look through the water filler port, and check the electrolyte surface. If the electrolyte does not reach the sleeve, add distilled water so that the level reaches the bottom of the sleeve (UPPER LEVEL line) without fail.

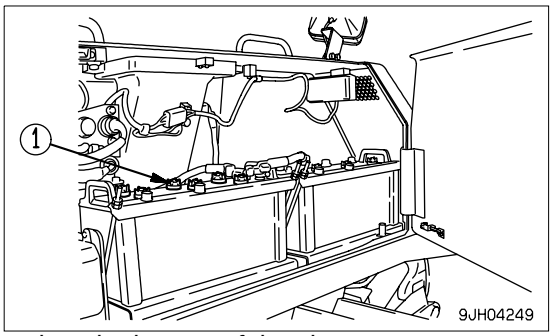

Use the diagram below for reference, and check if the electrolyte reaches the bottom of the sleeve.

A	Correct level The electrolyte level is up to the bottom of the sleeve, so the surface tension causes the surface to rise and the plate appears to be warped.
B	Too low (level) The electrolyte level is not up to the bottom of the sleeve, so the plate appears to be normal.

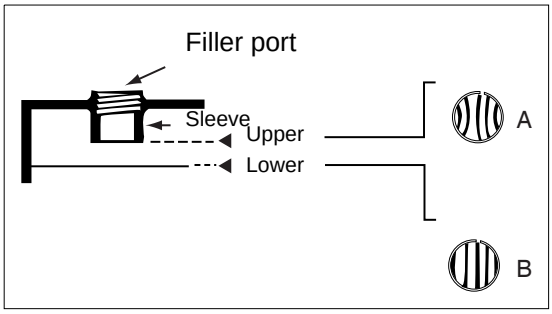

2. After adding distilled water, tighten cap (3) securely.

REMARK

If distilled water is added to above the bottom of the sleeve, use a syringe to lower the level to the bottom of the sleeve. Neutralize the removed fluid with baking soda (sodium bicarbonate), then flush it away with a large amount of water or consult your Komatsu distributor or battery maker.

https://truckmanualshub.com/

WHEN IT IS POSSIBLE TO USE INDICATOR TO CHECK ELECTROLYTE LEVEL

If it is possible to use and indicator to check the electrolyte level, follow the instructions given.

CHECK BRAKE PERFORMANCE

WARNING

If the machine moves during the following operation, please contact your Komatsu distributor for repairs immediately.

NOTICE
Do not place the joystick in the 1st speed position.
Otherwise, it will cause damage to the machine.

Before starting the engine, check that the area around the machine is safe, then do as follows.

1. Start the engine.
2. Start the engine, and after completing the warming-up operation, set fuel control dial (3) to the SLOW position.
3. Set safety lever (1) to the FREE position then operate blade control lever (6) and ripper control lever (7) to raise the blade and ripper.
   Leave the safety lever (1) to the FREE position.
4. Set parking lever (2) to the FREE position.
5. Depress brake pedal (5), set joystick (4) in FORWARD, then press the shift up button to enter 2nd speed.
6. Operate fuel control dial (3) and gradually raise the engine speed to full throttle. (Keep the brake pedal depressed.)
7. Check that the machine does not move. This indicates that brake performance is normal.

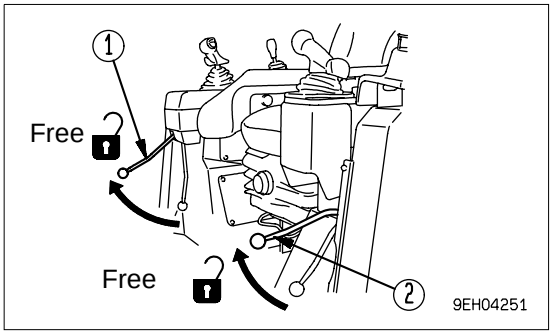

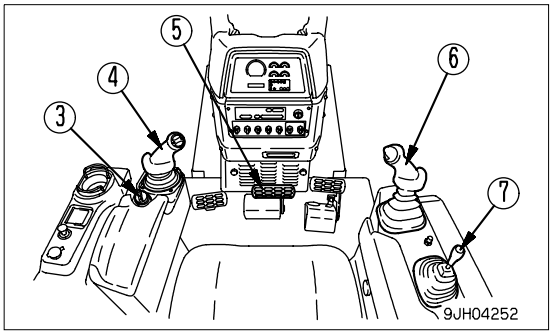

https://truckmanualshub.com/

CHECK OIL LEVEL IN DAMPER CASE, ADD OIL

1. Open the engine side cover on the left side of the chassis.
2. Remove dipstick (G) and wipe the oil off with a cloth.
3. Insert dipstick (G) fully in the oil filler pipe, then take it out again.
4. The oil should be between the H and L marks on dipstick (G). If the oil is below the L mark, add engine oil through the dipstick insertion port.

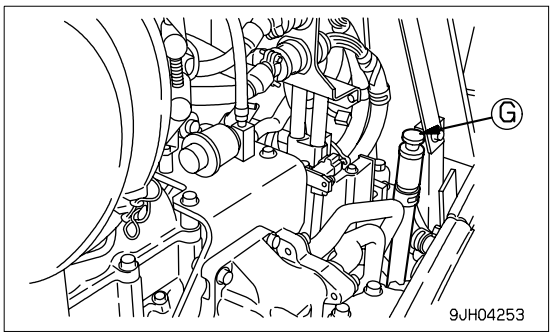

5. If the oil is above the H mark, open inspection cover (2) in the center of the bottom face of the power train case, drain the excess oil from drain plug (P) of the engine damper which can be seen towards the front of the machine from the inspection window, then check the oil level again.

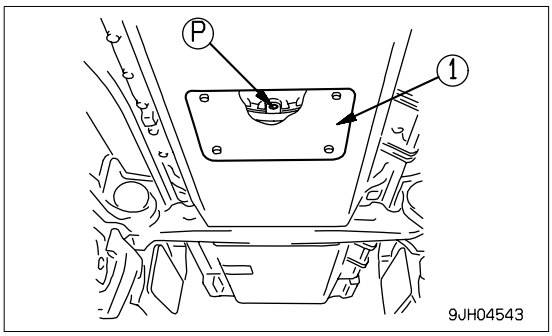

REMARK

- **Check the oil level while the engine is stopped.**
- **If the machine is inclined, set it in a level position before checking the oil level.**

https://truckmanualshub.com/

EVERY 500 HOURS SERVICE

Maintenance for every 250 hours service should be carried out at the same time.

CHANGE OIL IN ENGINE OIL PAN, REPLACE ENGINE OIL FILTER CARTRIDGE AND BYPASS FILTER CARTRIDGE

(including engine by-pass filter cartridge)

WARNING

The oil is at high temperature after the engine has been operated, so never change the oil immediately after finishing operations. Wait for the oil to cool down before changing it.

- Refill capacity: 38 liters
- Prepare a socket wrench and filter wrench.

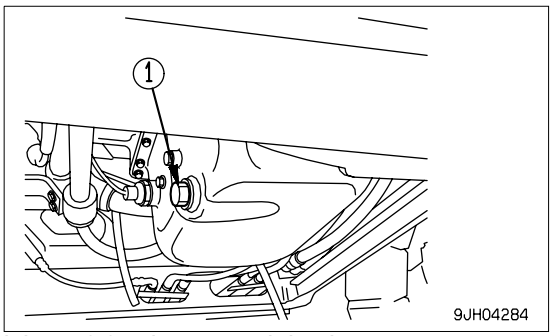

1. Remove the covers at the bottom left at the front of the machine and on the side face, and put a container directly underneath to catch the drained oil.
2. Remove drain plug (1) slowly to avoid getting oil on yourself, and drain the oil.
   Take care not to loosen drain valve (1) so much that the stopper pin in the valve is distorted.
   Tightening torque for drain plug (1): 68.6 ± 9.81 N·m
   (7 ± 1 kgf·m)
3. Check the drained oil, and if there are excessive metal particles of foreign material, please contact your Komatsu distributor.
4. Tighten drain valve (1).
5. Using the filter wrench, turn engine oil filter cartridge (2) to the left and remove it.
6. Clean the filter holder, fill the new filter cartridge with engine oil, coat the packing surface and thread with engine oil (or coat it thinly with grease), then install the filter cartridge.
7. When installing the filter cartridge, bring the packing surface into contact with the filter holder, then tighten a further 3/4 to1 turn.
8. After replacing the filter cartridge, add engine oil through oil filler port (F) until the oil level is between the H and L marks on the dipstick.
9. Run the engine at idling for a short time, then stop the engine, and check that the oil level is between the H and L marks on the dipstick. For details, see “CHECK OIL LEVEL IN ENGINE OIL PAN, ADD OIL (3-59)“.

   Even if the machine has not been operated for 500 hours, the oil and filter cartridge must be replaced when the machine has been operated for 12 months.
   In the same way, even if the machine has not been operated for 12 months, the oil and filter cartridge must be replaced when the machine has been operated for 500 hours.

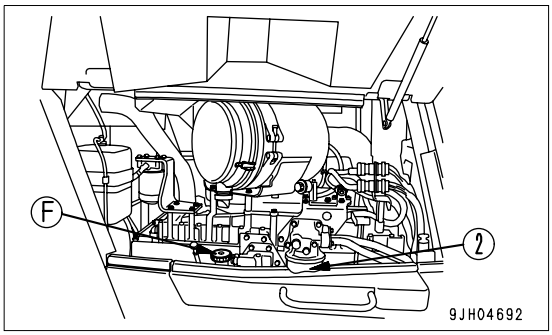

https://truckmanualshub.com/

REPLACE FUEL FILTER CARTRIDGE

Prepare a filter wrench and a container to catch the fuel.

WARNING

- **Engine is at high temperature immediately after the machine has been operated. Wait for engine to cool down before replacing the filter.**
- **Do not bring fire or sparks near the fuel.**
- **When bleeding the air, be careful not to let the fuel overflow. It may cause a fire.**

NOTICE

- **Genuine Komatsu fuel filter cartridges use a special filter that has highly efficient filtering ability. When replacing the filter cartridge, always use a genuine Komatsu part.**
- **The common rail fuel injection system used on this machine consists of more precise parts than the conventional injection pump and nozzle.**
- **If any part other than a genuine Komatsu filter cartridge is used, dust or dirt may get in and cause problems with the injection system. Always avoid using substitute parts.**
- **When carrying out inspection or maintenance of the fuel system, pay more attention than normal to the entry of dirt. If dirt is stuck to any part, use fuel to wash it off completely.**

1. Set the container under the filter cartridge to catch the drained fuel.
2. Close valve (1) of fuel strainer part.
3. Remove the drain plug at the bottom of the filter to drain fuel.
   After draining fuel, tighten the drain plug.
4. Using a filter wrench, turn filter cartridge (2) counterclockwise to remove it.
5. Clean the filter holder, fill a new filter cartridge with clean fuel, coat the packing surface with engine oil, then install it to the filter holder.
6. When installing, tighten until the packing surface contacts the seal surface of the filter holder, then tighten it up 3/4 to 1 of a turn.
   If the filter cartridge is tightened too far, the packing will be damaged and this will lead to leakage of fuel. If the filter cartridge is too loose, fuel will also leak from the packing, so always tighten to the correct amount.
7. Open valve (1) of fuel strainer part and loosen air bleeding plugs (3).

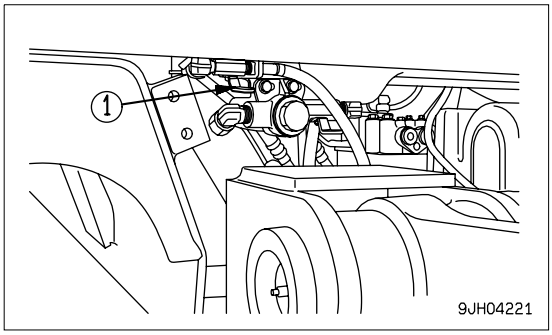

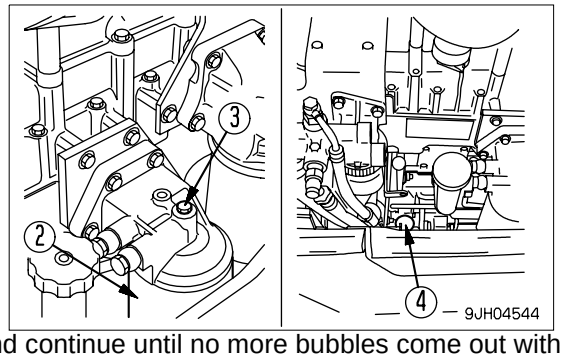

8. Loosen the knob of priming pump (4), move it up and down, and continue until no more bubbles come out with the fuel to air bleed plug (3).
9. Tighten air bleed plug (3), push in the knob of priming pump (4), then tighten it.
10. After replacing the filter cartridge, start the engine and check for oil leakage from the filter seal surface.

REMARK

When only the filter cartridge is replaced, it is suffficient that air bleeding is carried out for the filter head alone. But when the fuel piping is removed, air bleeding should also be carried out for the injection pump air-bleeding valve.

https://truckmanualshub.com/

REPLACE POWER TRAIN OIL FILTER ELEMENT, STEERING LUBRICATING OIL FILTER ELEMENT

WARNING

Before opening the filter cases, depress the brake pedal several times to release the pressure, then lock the brake pedal. If there is still pressure inside the filter, the oil may spurt out.

1. Open the left side cover, then loosen 2 bolts at the top of the inspection cover.

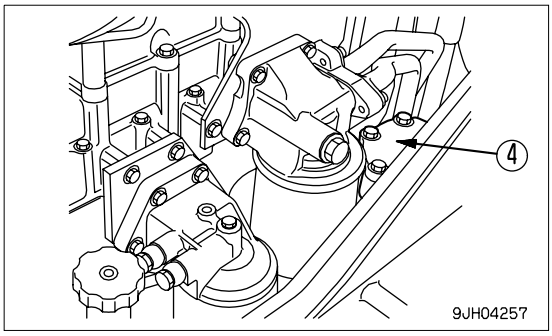

2. Remove bolts (3), pull up cover (4), then take out element (5).
3. Clean the inside of the case and the removed parts, then install a new element.
   Replace the O-ring also at the same time.

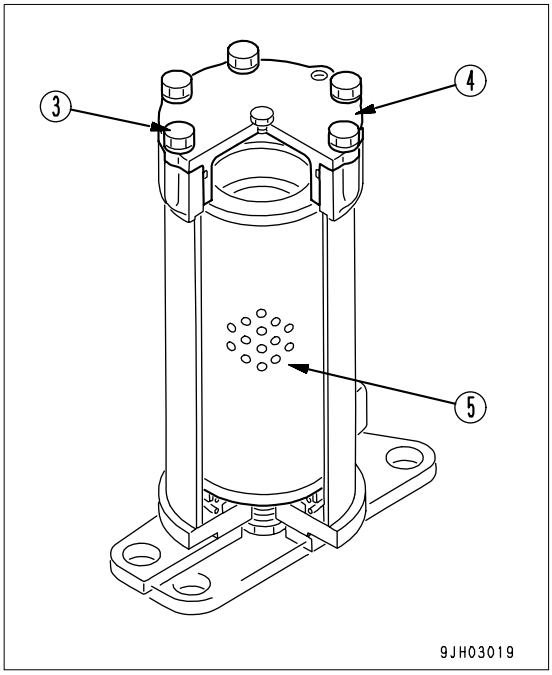

https://truckmanualshub.com/

CHECK OIL LEVEL IN FINAL DRIVE CASE, ADD OIL

WARNING

There is danger that the oil may spurt out under internal pressure, so to the side, and gradually turn the plug to release the internal pressure before removing the plug completely.

1. Place the machine on a horizontal place.
2. Remove oil level plug (G) and check whether the final drive case is filled with oil to lower edge of the plug hole.
3. If the oil level is low, add engine oil through oil level plug (G).
   Before removing the oil level plug (G), remove all the mud and dirt from around the plug, and be careful not to let any dirt or mud get in when adding oil.

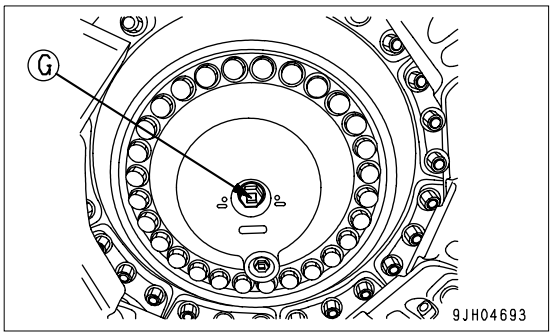

REPLACE HYDRAURIC TANK BREATHER ELEMENT

WARNING

Replace the element when the oil is cold.
When removing breather cap (1), turn it slowly to release the internal pressure before removing it.

1. Remove breather cap (1) at the top of the hydraulic tank.

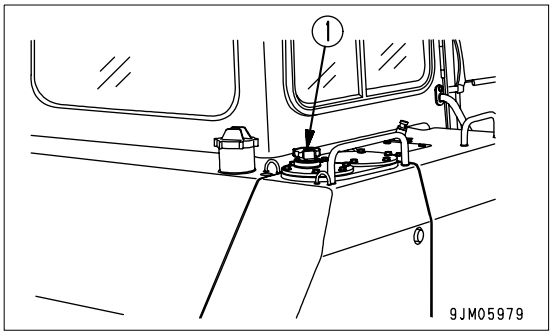

2. Replace element (2) inside the cap.

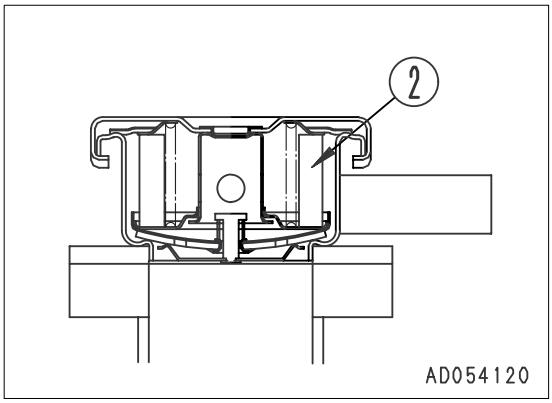

https://truckmanualshub.com/

EVERY 1000 HOURS SERVICE

Maintenance for every 250 and 500 hours service should be carried out at the same time.

CHANGE OIL IN POWER TRAIN CASE, WASH STRAINERS (POWER TRAIN PUMP STRAINER, SCAVENGING PUMP STRAINER)

⚠ WARNING

- **The oil is at high temperature immediately after operations, so wait for the temperature to go down before starting the operation.**
- **The undercover is heavy. Do not go directly under the cover when opening or closing it. When removing bolts (5), carry out the operation at the rear of the point immediately under the cover so that it is possible to escape at any time.**
- **Prepare the following.**

- Refill capacity: 60 liters

1. Remove drain cover (1) at the bottom Right of the power train case, then loosen drain plug (2) and drain the oil.
   After draining the oil, tighten drain plug (2).
   Do not remove drain plug (2).

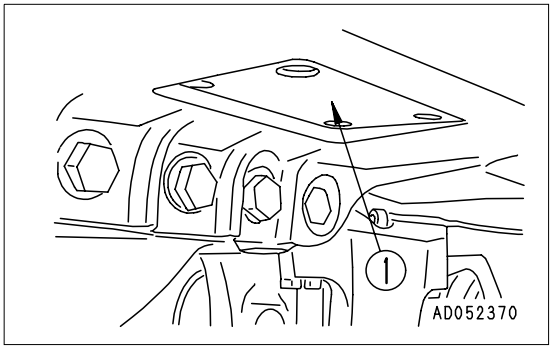

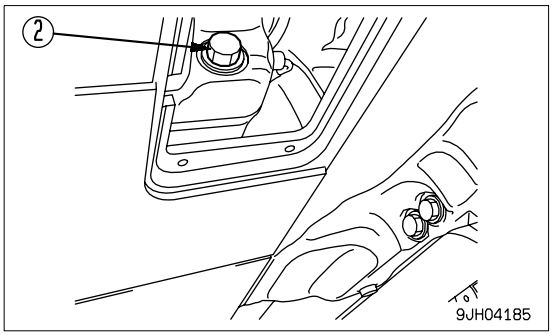

https://truckmanualshub.com/

2. Remove inspection cover (2) in the undercover at the bottom rear of the machine as follows.
   1) Remove 2 bolts (3) at the Right of machine.
   2) Hold cover (3) in position and gradually remove 2 bolts (4) at the Left of machine. (Rain water may flow out when doing this.)
   3) Lower cover (2) gradually to open it. (The front of the cover is attached by a hinge.)
   If you look up, you can see the strainer.

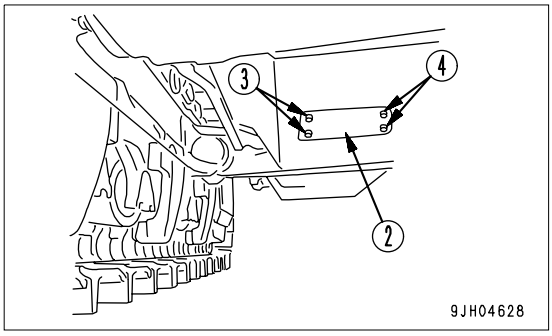

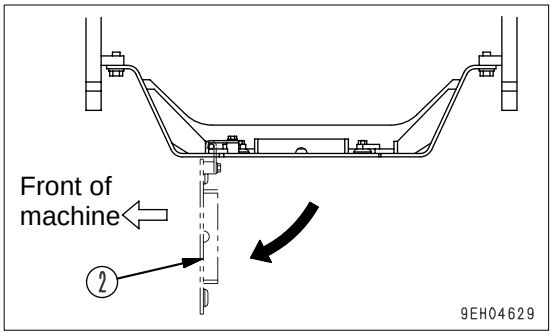

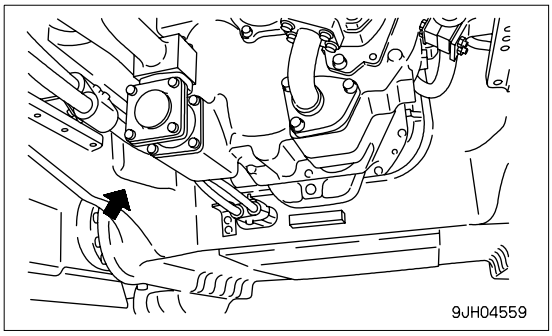

3. Remove drain plug (P2) in the strainer cover, and drain the oil (approx. 4 liters) collected inside the piping.
4. Loosen mounting bolt (5) of the power train strainer, then remove cover (6).
5. Remove spring (7), then remove strainer (8).
6. Remove any dirt stuck to strainer (8), then wash it in clean diesel oil or flushing oil. Wash the removed parts and the inside of the case at the same time.
7. Loosen mounting bolt (9) of the scavenging pump strainer, then remove cover (10).
8. Remove strainer (11).
9. Remove any dirt stuck to strainer (11), then wash it in clean diesel oil or flushing oil. Wash the removed parts and the inside of the case at the same time.
10. Install the strainers to their original position.
11. Replace the power train filter element.
    For details, see “REPLACE POWER TRAIN OIL FILTER ELEMENT, STEERING LUBRICATING OIL FILTER ELEMENT (4-47)“.

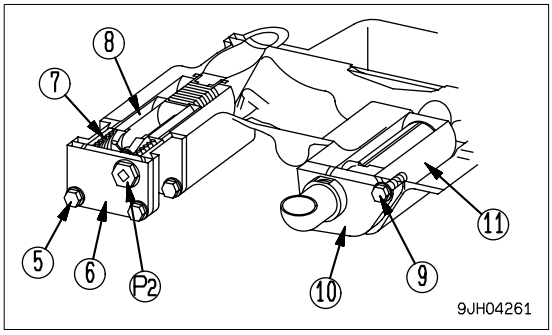

https://truckmanualshub.com/

12. Refill the specified quantity of engine oil through oil filler (F).
13. After adding the oil, check that the oil is at the specified level.
    For details, see “CHECK OIL LEVEL IN POWER TRAIN CASE, ADD OIL (3-60)“.
    If the spring or strainer are damaged,replace them with new parts.

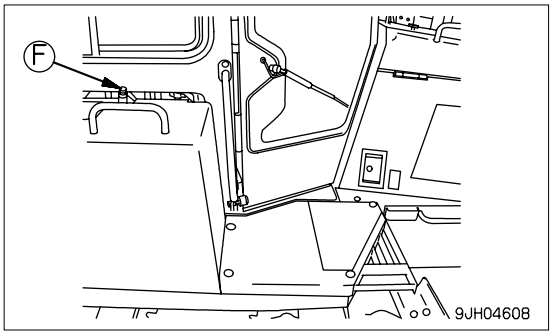

CHECK, CLEAN FUEL STRAINER

1. Tighten valve (1).
2. Remove cap (2), and wash the strainer and strainer case.
   The strainer forms one unit with the cap.
3. After checking and cleaning, set the strainer in the case, then tighten cap (2).
4. After installing, open valve (1).

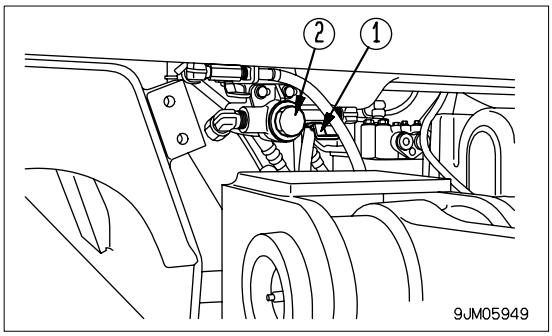

https://truckmanualshub.com/

REPLACE CORROSION RESISTOR CARTRIDGE

WARNING

If the engine has been operated, all parts will be at a high temperature, so never try to replace the cartridge immediately after stopping the engine.
Always wait for the engine and other parts to cool down.

- Container to catch drained coolant
- Prepare a filter wrench for fuel filter element.

1. Turn valve (2) of corrosion resistor (1) as far as the CLOSE stopper.
2. Set a container to catch the coolant under the cartridge.
3. Using a filter wrench, turn cartridge (3) to the left to remove it.
4. Clean the filter holder, coat the packing surface and thread of the new cartridge with engine oil, then install it to the filter holder.
5. When installing, tighten until the packing surface contacts the seal surface of the filter holder, then tighten it up 2/3 of a turn.
   If the filter cartridge is tightened too far, the packing will be damaged and this will lead to leakage of coolant.
   If the filter cartridge is too loose, coolant will also leak from the packing, so always tighten to the correct amount.
6. Turn valve (2) of the cartridge to the OPEN position.
7. After replacing the cartridge, start the engine and check for any leakage of water from the filter seal surface. If there is any water leakage, check if the cartridge is tightened properly.

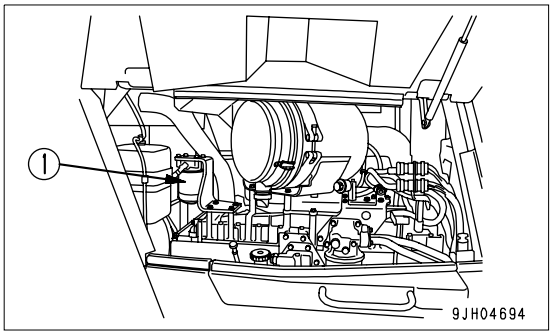

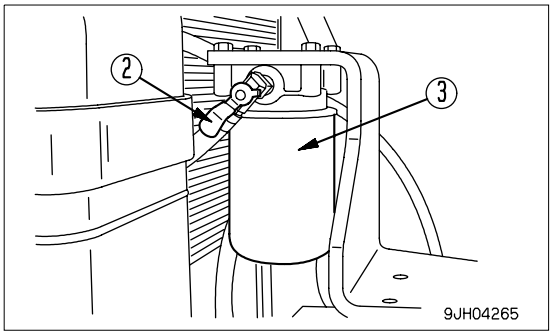

CHECK TIGHTENING PARTS OF TURBOCHARGER

Please contact your Komatsu distributor to have the tightening portions checked.

https://truckmanualshub.com/

EVERY 2000 HOURS SERVICE

Maintenance for every 250, 500 and 1000 hours service should be carried out at the same time.

CHANGE OIL IN HYDRAULIC TANK, REPLACE HYDRAULIC OIL FILTER ELEMENT, CLEAN HYDRAULIC TANK STRAINER

⚠ WARNING

- **The oil is at high temperature immediately after the machine has been operated. Wait for the oil to cool down before changing the oil.**
- **When removing the oil filler cap (F), turn it slowly to release the internal pressure, then remove it carefully.**

- Refill capacity: 67 liters

1. Lower the blade and ripper on the ground securely, stop the engine and slowly turn the cap of oil filler (F) to release the internal pressure. Then, remove the cap.

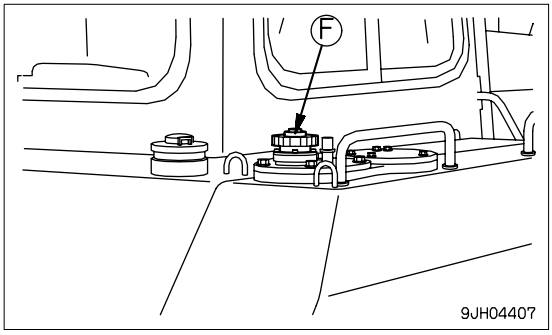

2. Remove drain plug (1) at the bottom of the tank and loosen drain valve (2). After draining the oil, tighten drain plug (1) and drain valve (2). When loosening drain valve (1), be careful not to get oil on yourself.

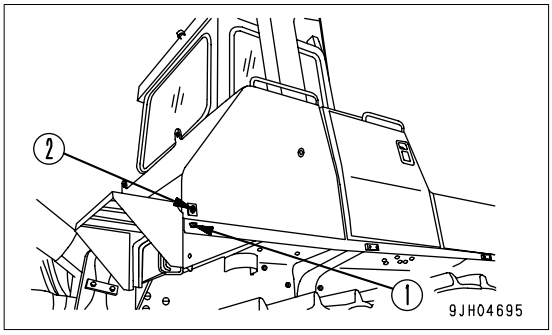

3. Remove bolts (3), then remove cover (4) and take out the element.
4. Clean the inside of case and removed parts and install a new element.

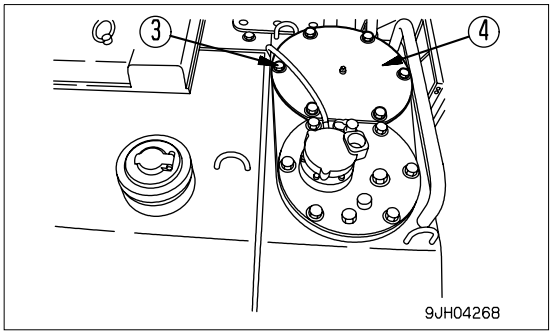

5. Remove bolts (5), then remove cover (6) and take out the strainer.
6. Wash the strainer in clean diesel oil or flushing oil.
7. Install the strainer to its original position.
8. Add engine oil through oil filler port (F) to the specified level.
9. After adding oil, check that the oil is at the specified level. For details, see “CHECK OIL LEVEL IN HYDRAULIC TANK, ADD OIL (3-62)“.

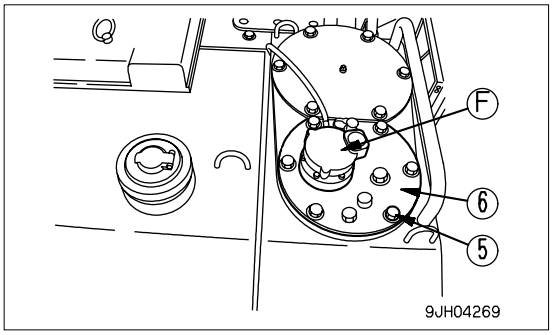

https://truckmanualshub.com/

CHANGE OIL IN FINAL DRIVE CASE

WARNING

- **The oil is at high temperature immediately after the machine has been operated. Wait for the oil to cool down before starting the operation.**
- **There is danger that oil spouts out due to the internal pressure. When removing the plug, work from the side, turn the plug slowly to release the internal pressure, and remove it carefully.**

- Refill capacity: (each) 26 liters

1. Stop the machine so that drain plug (H) is directly at the bottom.
2. After removing oil filler/level plug (G), remove drain plugs (H) and (1), drain the oil, then tighten the plug again.
3. Add engine oil to the specified level through oil filler level plug (G).
4. After adding oil, check that the oil is up to to the specified level. For details, see “CHECK OIL LEVEL IN FINAL DRIVE CASE, ADD OIL (4-48)“.

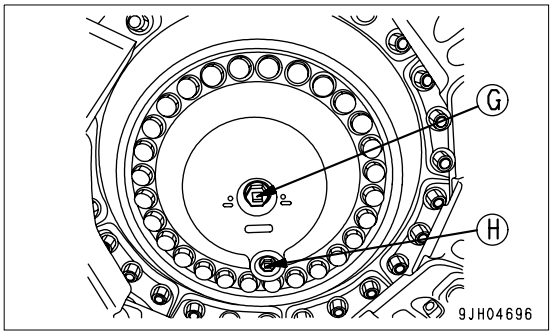

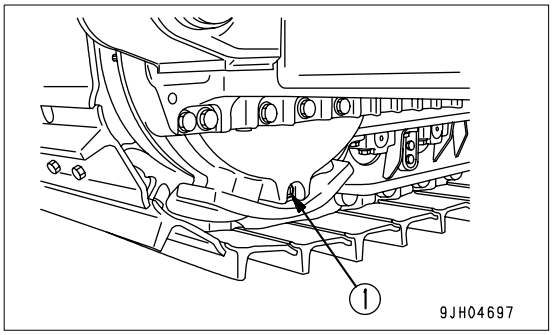

https://truckmanualshub.com/

CHANGE OIL IN DAMPER CASE, CLEAN DAMPER BREATHER

WARNING

- **The oil is at high temperature immediately after the machine has been operated. Wait for the oil to cool down before carrying out maintenance.**
- **The undercover is heavy, so do not go directly under the cover when opening or closing it. When removing bolts (2) and (3), carry out the operation at the rear of the point immediately under the cover so that it is possible to escape at any time.**

- Refill capacity: 1.5 liters

1. Open the engine side cover at the left of the machine; you can see gauge (G).

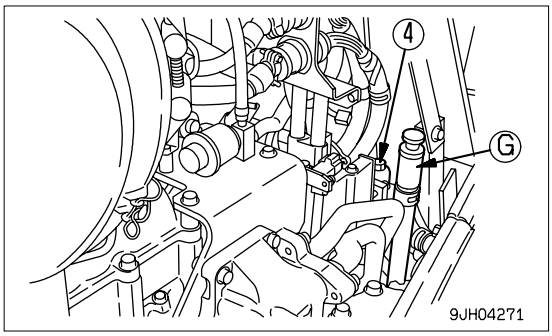

2. Remove the undercover (1) at the bottom rear of the chassis as follows.
   1) Remove 2 bolts (2) at the Right of machine.
   2) Hold cover (1) in position and gradually remove 2 bolts (3) at the Left of machine. (Rain water may flow out when doing this.)
   3) Lower cover (1) slowly and open it. Drain plug (P) can be seen at the top.
3. Remove dipstick (G), then remove drain plug (P) and drain the oil.
   After draining the oil,tighten drain plug (P).
4. Add engine oil through the holder of dipstick (G). After adding the oil, insert dipstick (G).
5. Remove any dirt or dust stuck to breather (4), then wash with clean diesel oil or flushing oil.If it cannot be cleaned completely, replace with a new part.
6. Then close cover (1).

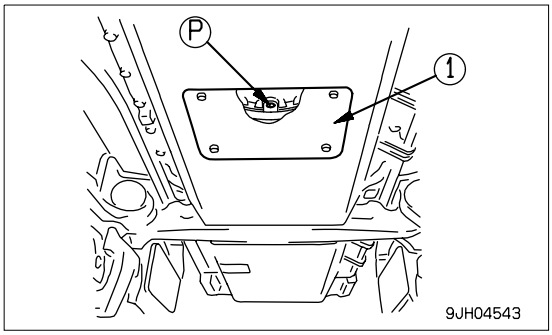

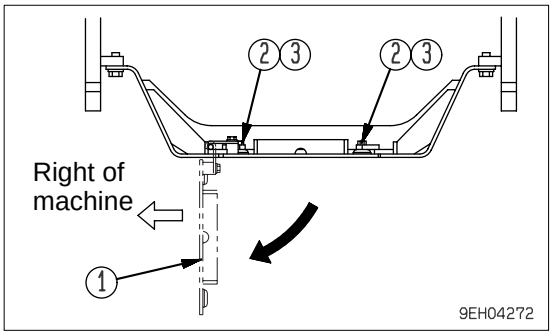

https://truckmanualshub.com/

CHECK PIVOT BEARING OIL LEVEL, ADD OIL

1. Remove plug (1).
   When removing plug (1), be careful not to let dirt or dust get it.

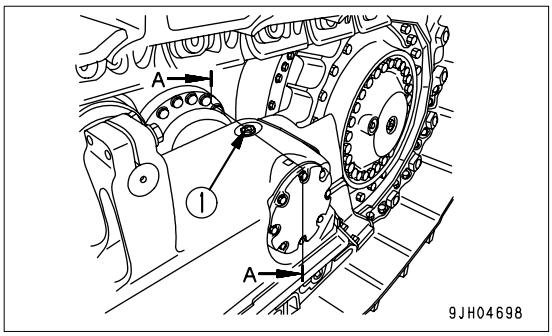

2. Check that the oil is at the level shown in the diagram. If the oil level is low, add engine oil through the hole of plug (1). Use class CD SAE 30 engine oil regardless of the ambient temperature.

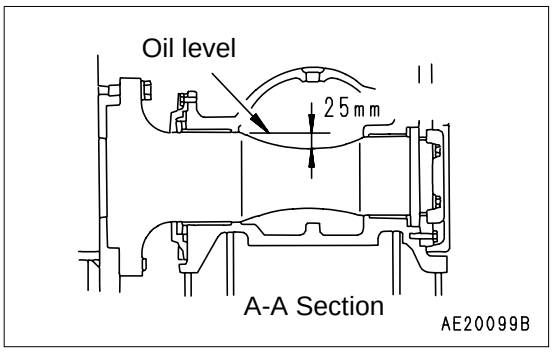

CLEAN ENGINE BREATHER ELEMENT

1. Loosen clamp (1), then remove the hose.
2. Then remove breather (2).
3. Rinse the whole breather in diesel oil or flushing oil. Dry with compressed air, then install it.
4. Check the breather hose, and if any deteriorated oil is stuck to the inside, replace the hose with a new hose.

REMARK
The engine breather element is at the front end on top of the engine (behind the radiator).

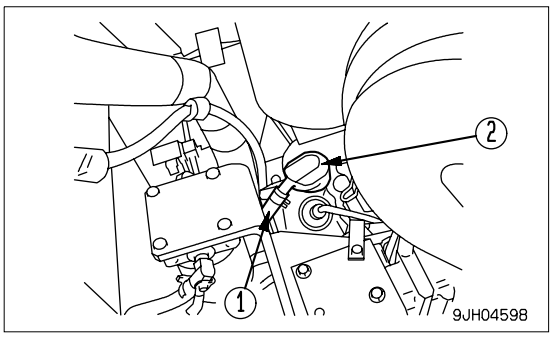

CHECK ALTERNATOR, STARTING MOTOR

The brush may be worn or the bearing may have run out of grease, so contact your Komatsu distributor for inspection or repair.
If the engine is started frequently, have this inspection carried out every 1000 hours.

CHECK INJECTOR

Check the color of the exhaust gas visually. If there is any abnormality in the exhaust gas color, contact your Komatsu distributor for inspection.
For details, see “TROUBLESHOOTING (3-107)“ “Exhaust color is black“.

CHECK VIBRATION DAMPER

Check decrease of damper fluid, dent or out-of-flat. If there is any abnormality, contact Komatsu distributor for repair.

CLEAN AND CHECK TUTBOCHARGER

Contact your Komatsu distributor for cleaning or inspection.

CHECK PLAY OF TURBOCHARGER ROTOR

Please contact your Komatsu distributor to have the rotor play checked.

https://truckmanualshub.com/

CHECK ENGINE VALVE CLEARANCE, ADJUST

As special tool is required for removing and adjusting the parts, you shall request Komatsu distributor for service.

https://truckmanualshub.com/

EVERY 4000 HOURS SERVICE

Maintenance for every 250, 500, 1000 and 2000 hours service should be carried out at the same time.

CHECK WATER PUMP

Check that there is oil leakage, water, leakage, or clogging of drain hole. If any abnormality is found, contact your Komatsu distributor for disassemble and repair or replacement.

CHECKING FOR LOOSENESS OF HIGH-PRESSURE CLAMP, HARDENING OF RUBBER

Check that there is no looseness in the high-pressure clamp mounting bolts (1) - (15) in the drawing on the next page. Check visually and feel with your finger to check that the rubber has not hardened. If there is any problem, the problem part must be replaced. In such a case, please contact your Komatsu distributor.

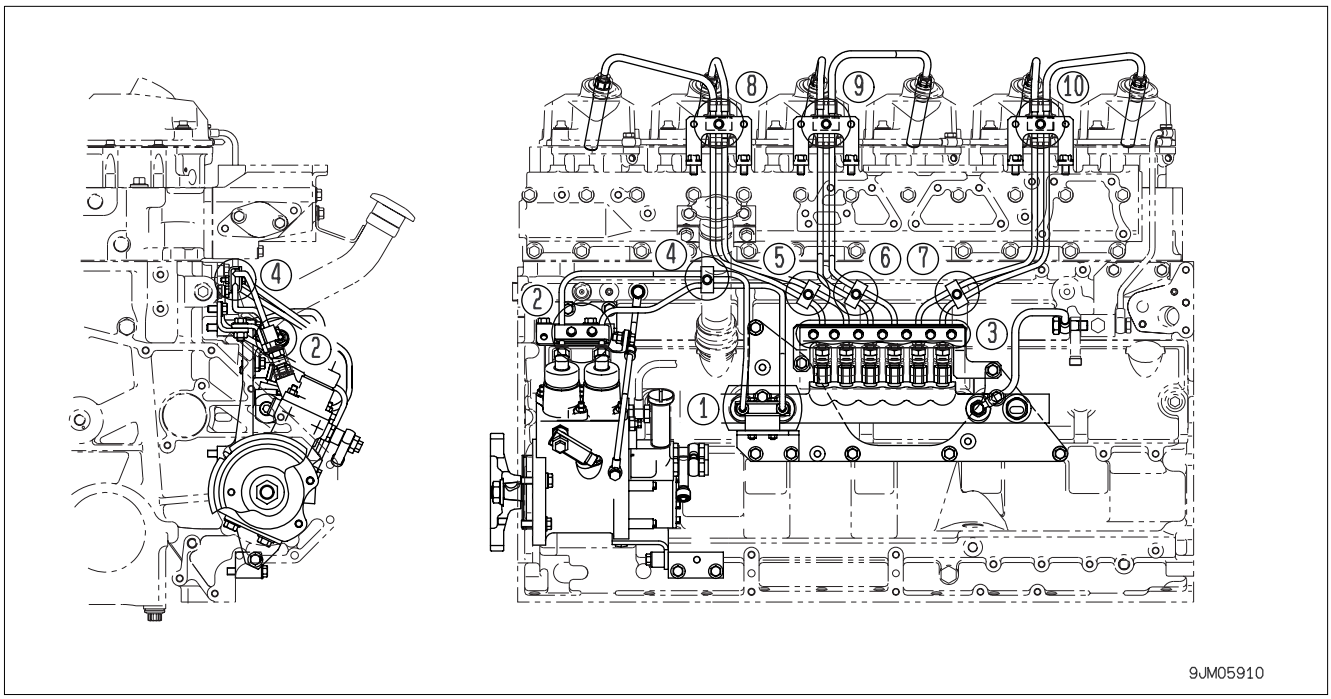

NOTICE

If the engine continues to be used when there are loose bolts, hardened rubber, or missing parts, there is danger of damage or breakage occurring due to vibration and wear at the connections of high-pressure piping. Always check that the proper high-pressure piping clamps are correctly installed.

https://truckmanualshub.com/

CHECKING FOR MISSING FUEL SPRAY PREVENTION CAP, HARDENING OF RUBBER

Fuel spray prevention caps (1) - (16) and fuel spray prevention cover (17) are protective parts installed to prevent fire caused by fuel leaking and spraying out on to high temperature parts of the engine. Check visually that there are no missing caps or loose bolts, and feel with your finger to check that the rubber has not hardened. If there is any problem, the problem part must be replaced. In such a case, please contact your Komatsu distributor.

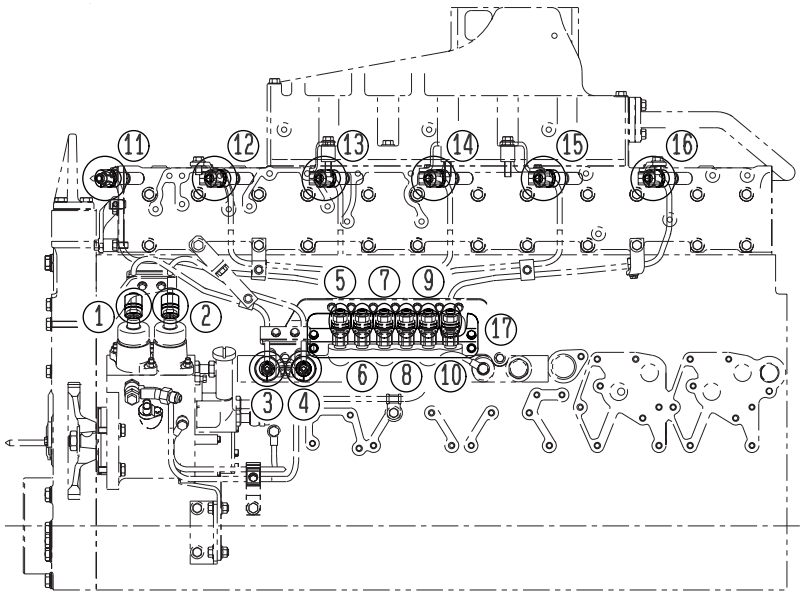

REPLACE INJECTOR ASSEMBLY

Please contact your Komatsu distributor to have the injector nozzle assembly replaced.

https://truckmanualshub.com/

CHECK MAIN FRAME, WORK EQUIPMENT (BLADE, RIPPER)

Check after the first 4000 hours, and every 1000 hours after that.

- Preparation

Wipe off all the mud that is stuck around portions (A) - (L) of the work equipment and frame to make it easier to carry out the check.

- Visual check

Carefully check the base material of the steel casting and welding at portions (A) - (L), and check that there is no damage.
If any cracks or other damage are found, carry out repairs.
Please contact your Komatsu distributor for details of the repair procedure.

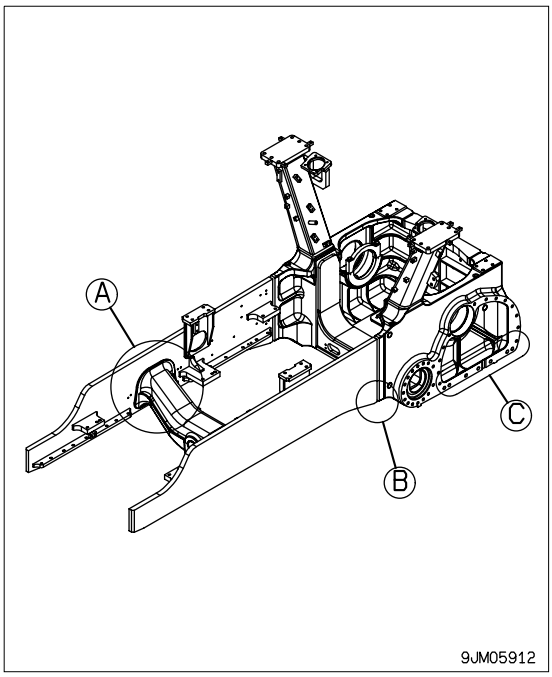

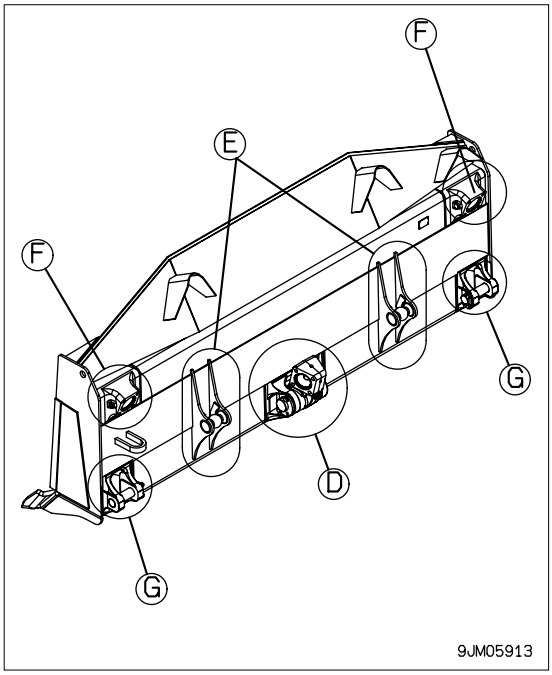

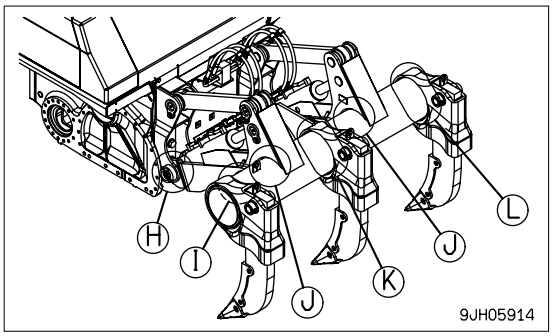

https://truckmanualshub.com/

EVERY 8000 HOURS SERVICE

Maintenance for every 10, 100, 250, 500, 1000, 2000 and 4000 hours service should be carried out at the same time.

REPLACE HIGH-PRESSURE PIPING CLAMP

Please contact your Komatsu distributor to have the engine high-pressure clamp replaced.

REPLACE FUEL SPLAY PREVENTION CAP

Please contact your Komatsu distributor to have the fuel spray prevention cap replaced.

https://truckmanualshub.com/

https://truckmanualshub.com/

SPECIFICATIONS

https://truckmanualshub.com/

SPECIFICATIONS

	Item		Unit	D85EX-15	D85PX-15
				Semi-U tilt dozer	Straight tilt dozer
	Operating weight (without operator)		kg	28,000 (*1)	27,550(*2)
	Blade unit weight (including cylinder)		kg	3,565	3,345
	Ripper unit weight(Multi ripper)		kg	2,215 (4,884)	-
	Drawbar unit weight		kg	-	176
	Name of engine		-	KOMATSU SA6D125E-3 diesel engine	
	Engine horsepower		kW(HP)/ rpm	179 (240)/1,900	
A	Overall length		mm	7,224	6,065
B	Overall hight		mm	3,324	3,361
C	Overall width		mm	3,635	4,365
	Travel speed (1st/2nd/3rd)	Forward	km/h	3.6/6.1/10.1	3.6/6.0/10.0
		Reverse	km/h	4.7/8.0/13.0	4.7/7.9/12.7

*1: Semi-U tilt dozer, multi-shank ripper, ROPS cab, air conditioner
*2: Straight tilt dozer, drawbar, ROPS cab, and air conditioner

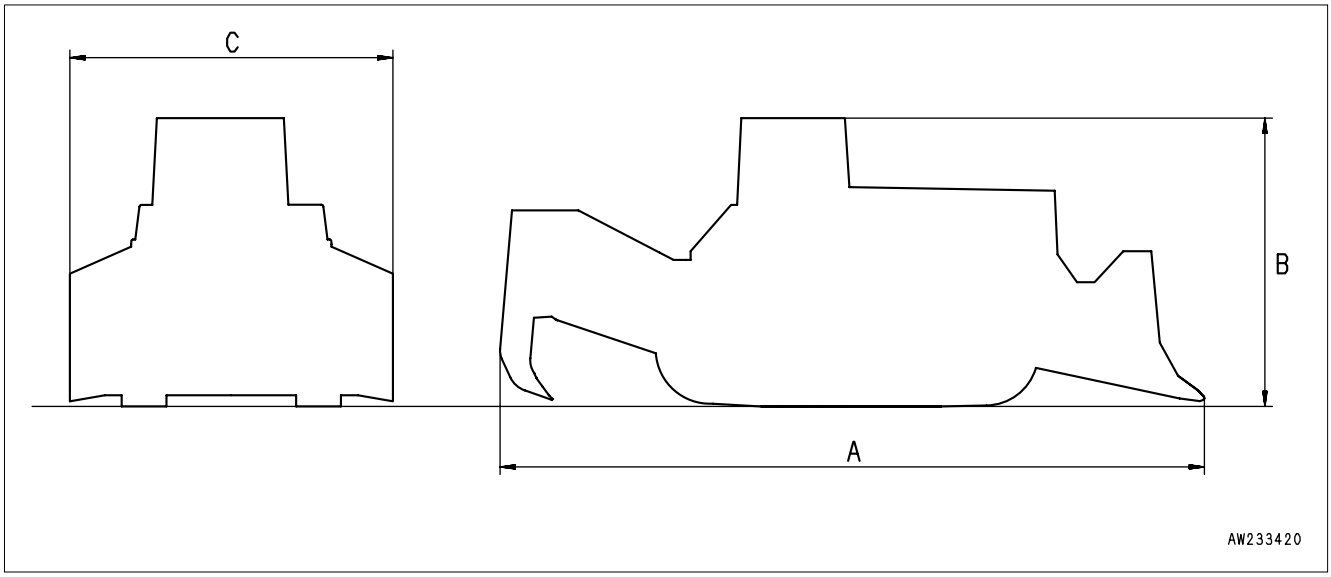

https://truckmanualshub.com/

ATTACHMENTS, OPTIONS

WARNING

Please read and make sure that you understand the safety volume before reading this section.

https://truckmanualshub.com/

GENERAL PRECAURIONS

PRECAUTIONS RELATED TO SAFETY

If attachments or options other than those authorized by Komatsu are installed, this will not only affect the life of the machine, but will also cause problems with safety.
When installing attachments not listed in this Operation and Maintenance Manual, contact your Komatsu distributor first.
If you do not contact Komatsu, we cannot accept any responsibility for any accidents or failures.

WARNING

General precautions

- **Attachments are strong tools. Handle them correctly to prevent serious injury.**
- **Read the operation manual for each attachment carefully, and do not use the machine before you understand the operation method completely.**
- **If you lose your operation manual, be sure to order another copy from the manufacturer or your Komatsu distributor.**
- **Place your foot on a pedal only when necessary for prevention of serious injury caused by malfunction.**

Precautions for removal and installation
When removing or installing an attachment, observe the following items and work safely.

- **Install or remove an attachment on a level and hard place.**
- **When working by two persons or more in cooperation, decide signs and work according to them.**
- **When carrying a heavy part (25 kg) or heavier, use a crane.**
- **When removing a heavy part, be sure to prepare a support for it in advance.**
- **When removing it with a crane, take care of its center of gravity particularly.**
- **It is dangerous to work on a part lifted up with a crane. Be sure to place the part on a stand and check safety.**
- **When leaving an attachment removed or installing it, place it in a stable position.**
- **Do not stand under a part lifted up with a crane. Stay where your are safe even if the part falls.**

NOTICE
Qualifications are required to operate a crane. Never allow the crane to be operated by an unqualified person.
For details of removal and installation operations, contact your Komatsu distributor.

https://truckmanualshub.com/

SELECTION OF TRACK SHOE

SELECTION OF TRACK SHOES

Select suitable track shoes to match the operating conditions.

METHOD OF SELECTING SHOES

If a wider shoe than necessary is used, the load on the track will increase, and this will cause the shoes to bend, links to crack, pins to break, shoe bolts to come loose, and various other problems.

Category	Use	Precautions when using	Track shoe width
A	Bedrock, normal soil	This shoe can be used for a wide range of work from crushed rock to general civil engineering work such as reclamation of residential land. There is no particular limit to its use.	560 mm
B	Normal soil	Use this shoe for general soil, such as where the main work is scraper work and pusher work, reclaiming land for golf courses, or stripping the overburden for coal mines. This shoe cannot be used on bedrock. On jobsites where there are rocks in the soil, be careful to avoid letting the machine mount the rocks.	610 mm
C	Soft soil	Use this shoe on soft ground where the shoe in category B sinks into the ground. Do not use this shoe on jobsites where there are rocks in the soil.	660 mm

https://truckmanualshub.com/

PROCEDURE FOR SELECTING RIPPER POINT

PROCEDURE FOR SELECTING RIPPER POINT

Procedure (1)

Procedure (2) Check wear

Procedure (3) Check for cracks or breakage

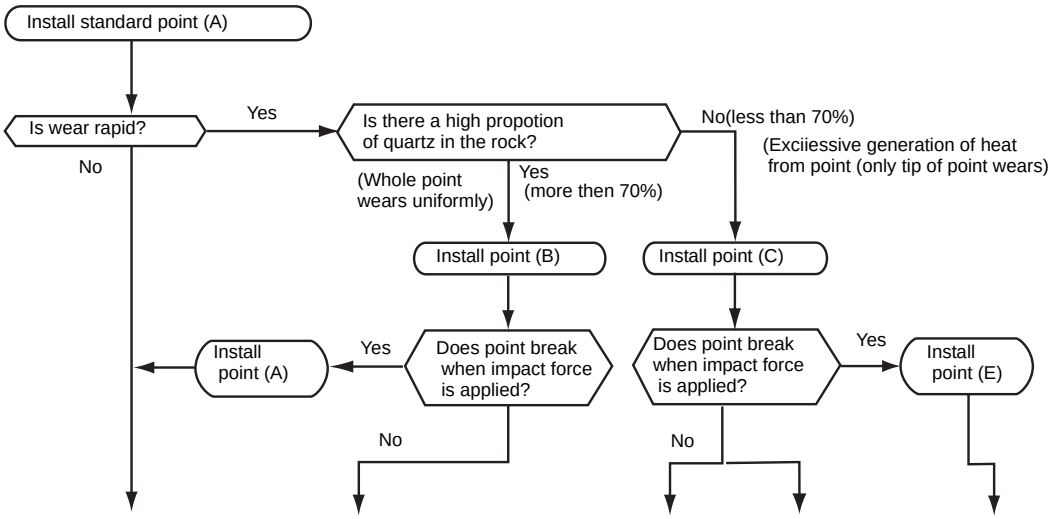

Typical rock	Hard-ness	Soft ◄► Hard	Soft ◄► Medium hard	soft ◄► Medium hard ◄► Hard		
	Type of rock	General rock	Sandstone	Basalt, andesite, granite, chert		
	Fea-tures	-	. Very high propotion of quartz (70 -95%) point wears repidly	. Fairly high proportion of quartz (40 - 70%) . Does not form seams of layers, so there is excessive generation of heat from the point, the tip wears rapidly, and ripping is difficult.		
Suit-able point	Fea-tures	Point (A) . Symmetrical shape . Yellow . Short (can be turned and used)	Point (B) . Non-symmetrical shape . Yellow . Long	Point (C) . Non symmetrical shape . Red . Long	Point (D) .Symmetrical shape . Red . Long (can be turned and used)	Point (E) . Symmetrical shape . Red . Short (can be turned and used)
	Shape	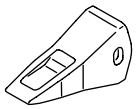 AD053700	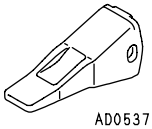 AD053710	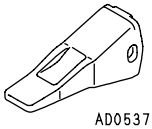 AD053710	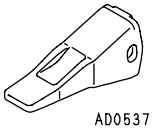 AD053710	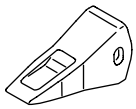 AD053700
	Part No.	175-78-31230	175-78-34131	175-78-34141	175-78-31293	175-78-31232

https://truckmanualshub.com/

CAP WITH LOCK, HANDLING

METHOD OF OPENING AND CLOSING CAP WITH LOCK

Lock-type caps are available for the radiator water filler cap, fuel tank filler cap, power train case oil filler cap, hydraulic tank oil filler cap, and hydraulic tank breather cap. The cap opening and closing method is as follows.

TO OPEN THE CAP

1. Insert the key. Make sure that you have inserted the key fully before turning it. If the key is turned when only partially inserted, it may break.
2. Turn the key counterclockwise to align the match mark on the cap with the rotor groove, then turn the cap slowly. When a click is heard, the lock is released, enabling the cap to be opened.

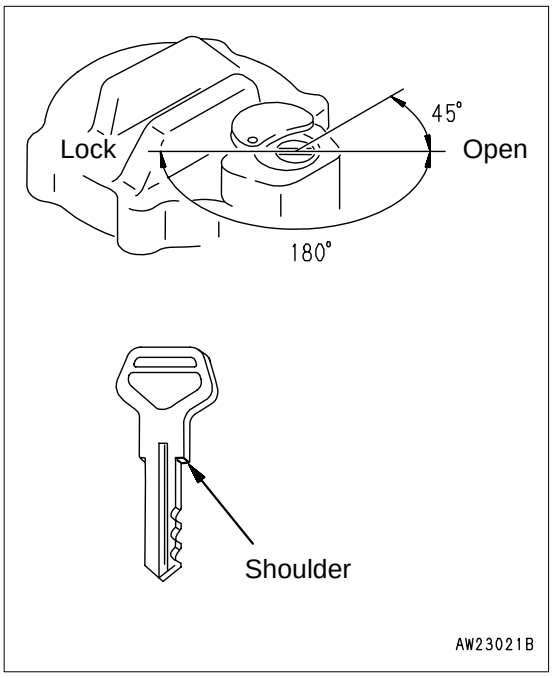

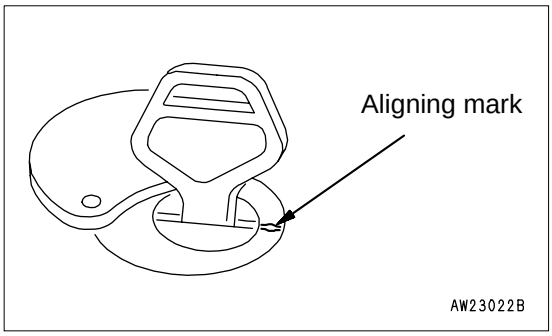

TO LOCK THE CAP

1. Turn the cap into place.
2. Turn the key clockwise and take the key out.

https://truckmanualshub.com/

https://truckmanualshub.com/

INDEX

https://truckmanualshub.com/

https://truckmanualshub.com/

INDEX

<A>

ACCUMULATOR, HANDLING 3-54
ADJUSTING POSTURE OF WORK EQUIPMENT .3-94
AIR CONDITIONER 3-50
GENERAL LOCATIONS AND FUNCTION OF CONTROL PANEL 3-50
METHOD OF OPERATION 3-52
PRECAUTIONS WHEN USING 3-53
ASHTRAY 3-41

<B>

BLADE SERIAL NO. PLATE POSITION 1-9

<C>

CAP WITH LOCK, HANDLING 6-5
METHOD OF OPENING AND CLOSING CAP WITH LOCK 6-5
CAR STEREO, HANDLING 3-42
CHECK AFTER FINISHING WORK 3-91
CHECK AFTER STOPPING ENGINE 3-78
CHECK BEFORE STARTING ENGINE, ADJUST ..3-55
COLD WEATHER OPERATION 3-104
AFTER COLD WEATHER 3-105
AFTER COMPLETION OF WORK 3-105
PRECAUTIONS FOR LOW TEMTERATURE 3-104
CONTROL LEVERS, PEDALS 3-31

<D>

DOOR OPEN LOCK 3-40
DOOR POCKET 3-41
DUST INDICATOR 3-36

<E>

ENGINE SERIAL NO. PLATE AND POSITION 1-8
EXPLANATION OF COMPONENTS 3-5

<F>

FOREWORD 1-2
FRONT PANEL 3-5
FRONT/REAR, LEFT/RIGHT DIRECTIONS OF MACHINE 1-7
FUSE BOX 3-37
FUSIBLE LINK 3-39

<G>

GENERAL PRECAUTIONS 2-9, 6-2
PRECAUTIONS RELATED TO SAFETY 6-2
GENERAL VIEW 3-2
GENERAL VIEW OF CONTROLS AND GAUGES 3-3
GENERAL VIEW OF MACHINE 3-2
GUIDES TO MAINTENANACE 4-2

<H>

HANDLING OIL, FUEL, COOLANT, AND PERFORMING OIL CLINIC 4-5

<I>

INSTALLATION OF CAB 3-103
INTRODUCTION 1-7

<L>

LOADING, UNLOADING WORK 3-100
LOCKING 3-91
LONG-TERM STORAGE 3-106
AFTER STORAGE 3-106
BEFORE STORAGE¥ 3-106
DURING STORAGE 3-106

<M>

MACHHINE SERIAL NO. PLATE AND POSITION 1-8
MAINTENANCE SCHEDULE CHART 4-17
METHOD OF LIFTING MACHINE 3-101
MOVING MACHINE OFF 3-79

<N>

NECESSARY INFORMATION 1-8
Noise emission levels 1-5

<O>

OPERATION 3-55
OPERATIONS AND CHECKS AFTER STARTING ENGINE 3-75
OUTLINE OF ELECTRIC SYSTEM 4-7
OUTLINES OF SERVICE 4-5

<P>

PARKING MACHINE 3-89
PERIODIC REPLACEMENT OF SAFETY CRITICAL PARTS 4-14
POSITION OF SERVICE METER 1-9
PRECAUTIONS FOR LOADING 3-100
PRECAUTIONS FOR MAINTENANCE 2-23
PRECAUTIONS FOR OPERATION 2-16, 3-88
BATTERY 2-20

https://truckmanualshub.com/

BEFORE STARTING ENGINE 2-16
OPERATION 2-17
TOWING 2-22
TRANSPORTATION 2-20
PRECAUTIONS FOR TRANSPORTATION 3-102
PROCEDURE FOR SELECTING RIPPER POINT .6-4
PROCEDURE FOR SELECTING RIPPER POINT 6-4

<R>

REMOVAL OF CAB 3-102
RIPPER SERIAL NO. PLATE POSITION 1-9
ROPS, FOPS NO. PLATE POSITION 1-9

<S>

SAFETY 2-2
SAFETY CRITICAL PARTS 4-15
SAFETY INFORMATION 1-3
SAFETY LABELS 2-4
POSITIONS OF SAFETY PICTOGRAMS 2-4
SASH GLASS INTERMEDIATE LOCK 3-40
SELECTION OF TRACK SHOE 6-3
SELECTION OF TRACK SHOES 6-3
SERVICE PROCEDURE 4-19
CHECK BEFORE STARTING 4-37
EVERY 1000 HOURS SERVICE 4-49
EVERY 2000 HOURS SERVICE 4-53
EVERY 250 HOURS SERVICE 4-38
EVERY 4000 HOURS SERVICE 4-58
EVERY 500 HOURS SERVICE 4-45
EVERY 8000 HOURS SERVICE 4-61
INTIAL 250 HOURS SERVICE(ONLY AFTER THE FIRST 250 HOURS) 4-19
WHEN REQUIRED 4-19
SHIFTING BETWEEN FORWARD AND REVERSE . 3-84
SHIFTING GEAR 3-82
SPECIFICATIONS 5-2
STANDARD TIGHTENING TORQUES FOR BOLTS AND NUTS 4-13
STARTING NEGINE 3-71
STEERING MACHINE 3-86
STOPPING ENGINE 3-78
STOPPING MACHINE 3-81
SWITCH 3-28

<T>

TABLE OF ENTER SERIAL NO. AND DISTRIBUTOR 1-10
TIPS FOR LOMGER UNDERCARRIAGE LIFE ..3-98
TORQUE LIST 4-13
TRANSPORTATION 3-100
TRANSPORTATION PROCEDURE 3-100
TRAVELING ON ROADS 3-102
TROUBLESHOOTING 3-107
AFTER RUNNING OUT OF FUEL 3-107
IF BATTERY IS DISCHARGED 3-109
METHOD OF TOWING MACHINE 3-108
OTHER TROUBLE 3-112

<U>

USE OF FUEL, COOLANT AND LUBRICANTS ACCORDING TO AMBIENT TEMPERATURE 4-9
PROPER SELECTION OF FUEL, COOLANT AND LUBRICANTS 4-9

<V>

Vibration levels 1-5

<W>

WEAR PARTS LIST 4-8
WORK POSSIBLE USING BULLDOZER 3-92

https://truckmanualshub.com/

COLOPHON

https://truckmanualshub.com/

D85EX-15, D85PX-15 BULLDOZER

Form No. EEAM022804

© 2005 KOMATSU

All Right Reserved

Printed in Belgium 09-05