https://truckmanualshub.com/

Genie®

Service Manual

Refer to inside cover for additional serial number information

Part No. 72062
Rev A2
October 2008

S™-80
S™-85

(from serial number 966 to 3081)

https://truckmanualshub.com/

Genie® S-80
Genie® S-85

Important

Read, understand and obey the safety rules and operating instructions in the *Genie S-80 & Genie S-85 Operator's Manual* before attempting any maintenance or repair procedure.

This manual provides detailed scheduled maintenance information for the machine owner and user. It also provides troubleshooting and repair procedures for qualified service professionals.

Basic mechanical, hydraulic and electrical skills are required to perform most procedures. However, several procedures require specialized skills, tools, lifting equipment and a suitable workshop. In these instances, we strongly recommend that maintenance and repair be performed at a Genie dealer service center.

Genie Industries has endeavored to deliver the highest degree of accuracy possible. However, continuous improvement of our products is a Genie policy. Therefore product specifications are subject to change without notice.

Readers are encouraged to notify Genie of errors and send in suggestions for improvement. All communications will be carefully considered for future printings of this and other manuals. Please write to the technical publications team in care of Genie Industries, PO Box 97030, Redmond WA 98073-97030 U.S.A.

If you have any questions, please contact Genie Industries.

Contact us:

http://www.genielift.com
e-mail: techpub@genieind.com

Genie® Industries

Copyright © 1998 by Genie Industries

Third Edition: First Printing, February 2001

"Genie" and "S" are Registered Trademarks of Genie Industries in the USA and many other countries.

Printed on recycled paper

Printed in U.S.A.

https://truckmanualshub.com/

Safety Rules

Danger

Failure to obey the instructions and safety rules in this manual, and the *Genie S-80 & Genie S-85 Operator's Manual* will result in death or serious injury.

Many of the hazards identified in the operator's manual are also safety hazards when maintenance and repair procedures are performed.

Do Not Perform Maintenance Unless:

☑ You are trained and qualified to perform maintenance on this machine.

☑ You read, understand and obey:
- manufacturer’s instructions and safety rules
- employer’s safety rules and worksite regulations
- applicable governmental regulations

☑ You have the appropriate tools, lifting equipment and a suitable workshop.

https://truckmanualshub.com/

SAFETY RULES

Personal Safety

Any person working on or around a machine must be aware of all known safety hazards. Personal safety and the continued safe operation of the machine should be your top priority.

Read each procedure thoroughly. This manual and the decals on the machine use signal words to identify the following:

Safety alert symbol—used to alert personnel to potential personal injury hazards. Obey all safety messages that follow this symbol to avoid possible injury or death.

⚠DANGER Red—used to indicate the presence of an imminently hazardous situation which, if not avoided, **will** result in death or serious injury.

⚠WARNING Orange—used to indicate the presence of a potentially hazardous situation which, if not avoided, **could** result in death or serious injury.

⚠CAUTION Yellow with safety alert symbol—used to indicate the presence of a potentially hazardous situation which, if not avoided, **may** result in minor or moderate injury.

CAUTION Yellow without safety alert symbol—used to indicate the presence of a potentially hazardous situation which, if not avoided, **may** result in property damage.

NOTICE Green—used to indicate operation or maintenance information.

Workplace Safety

Be sure to wear protective eye wear and other protective clothing if the situation warrants it.

Be aware of potential crushing hazards such as moving parts, free swinging or unsecured components when lifting or placing loads. Always wear approved steel-toed shoes.

Be sure to keep sparks, flames and lighted tobacco away from flammable and combustible materials like battery gases and engine fuels. Always have an approved fire extinguisher within easy reach.

Be sure that all tools and working areas are properly maintained and ready for use. Keep work surfaces clean and free of debris that could get into machine components and cause damage.

Be sure any forklift, overhead crane or other lifting or supporting device is fully capable of supporting and stabilizing the weight to be lifted. Use only chains or straps that are in good condition and of ample capacity.

Be sure that fasteners intended for one time use (i.e., cotter pins and self-locking nuts) are not reused. These components may fail if they are used a second time.

Be sure to properly dispose of old oil or other fluids. Use an approved container. Please be environmentally safe.

Be sure that your workshop or work area is properly ventilated and well lit.

https://truckmanualshub.com/

Third Edition • First Printing

Table of Contents

Introduction

Important Information ..... *ii*

Section One **Safety Rules**

General Safety Rules ..... *iii*

Section Two **Specifications**

Machine Specifications ..... 2 - 1
Performance Specifications ..... 2 - 2
Hydraulic Specifications ..... 2 - 3
Ford LRG 425 EFI Engine Specifications ..... 2 - 4
Deutz F4L 1011F Engine Specifications ..... 2 - 5
Perkins 704-30 Engine Specifications ..... 2 - 6
Hydraulic Hose and Fitting Torque Specifications ..... 2 - 7

Section Three **Theory of Operation**

Power Source ..... 3 - 1
Hydraulic System ..... 3 - 1
Electrical System ..... 3 - 1
Limit Switches ..... 3 - 2
Machine Controls ..... 3 - 2

https://truckmanualshub.com/

TABLE OF CONTENTS

Section Four **Scheduled Maintenance Procedures**

Introduction ..... 4 - 1
Maintenance Inspection Report ..... 4 - 3
A-1 Inspect the Operators' and Safety Manuals ..... 4 - 5
A-2 Inspect the Decals and Placards ..... 4 - 5
A-3 Inspect for Damage and Loose or Missing Parts ..... 4 - 6
A-4 Check the Engine Oil Level ..... 4 - 7
A-5 Check the Engine Coolant Level - Liquid Cooled Models ..... 4 - 8
A-6 Check for Fuel Leaks ..... 4 - 8
A-7 Check the Hydraulic Oil Level ..... 4 - 9
A-8 Check for Hydraulic Leaks ..... 4 - 10
A-9 Check the Tire Pressure ..... 4 - 10
A-10 Test the Extendable Axles ..... 4 - 11
A-11 Test the Platform and Ground Controls ..... 4 - 12
A-12 Test the Auxiliary Power Operation ..... 4 - 13
A-13 Test the Tilt Sensor ..... 4 - 14
A-14 Test the Limit Switches ..... 4 - 14
A-15 Drain the Fuel Filter/Water Separator - Diesel Models ..... 4 - 17
A-16 Inspect the Engine Air Filter ..... 4 - 19
A-17 Perform 30 Day Service ..... 4 - 20
A-18 Inspect the Radiator - Liquid Cooled Models ..... 4 - 20
A-19 Check the Battery ..... 4 - 21
A-20 Replace the Engine Oil and Filter - Ford Models ..... 4 - 22
A-21 Inspect the Electrical Wiring ..... 4 - 24
A-22 Check the Oil Cooler and Cooling Fins - Deutz Models ..... 4 - 25
A-23 Check the Engine Belt - Ford and Perkins Models ..... 4 - 26
A-24 Replace the Fuel Filters - Ford Models ..... 4 - 28

https://truckmanualshub.com/

TABLE OF CONTENTS

Section Four **Scheduled Maintenance Procedures**, continued

B-1 Check the Exhaust System ..... 4 - 30
B-2 Check the Hydraulic Tank Return Filter Condition Indicator ..... 4 - 31
B-3 Inspect the Tires and Wheels (including lug nut torque) ..... 4 - 32
B-4 Confirm the Proper Brake Configuration ..... 4 - 33
B-5 Check the Oil Level in the Drive Hubs ..... 4 - 34
B-6 Check and Adjust the Engine RPM ..... 4 - 36
B-7 Test the Key Switch ..... 4 - 37
B-8 Test the Emergency Stop Buttons ..... 4 - 38
B-9 Test the Ground Control Override ..... 4 - 38
B-10 Test the Platform Self-leveling ..... 4 - 39
B-11 Test the Horn ..... 4 - 39
B-12 Test the Foot Switch ..... 4 - 40
B-13 Test the Engine Idle Select Operation ..... 4 - 40
B-14 Test the Fuel Select Operation - Ford Models ..... 4 - 41
B-15 Test the Drive Enable System ..... 4 - 42
B-16 Test the Drive Brakes ..... 4 - 43
B-17 Test the Drive Speed - Stowed Position ..... 4 - 44
B-18 Test the Drive Speed - Raised or Extended Position ..... 4 - 45
B-19 Test the Alarm Package (if equipped) ..... 4 - 46
B-20 Perform Hydraulic Oil Analysis ..... 4 - 47
B-21 Replace the Hydraulic Tank Return Filter ..... 4 - 47
B-22 Replace the Drive Loop Hydraulic Filter ..... 4 - 48
B-23 Inspect the Fuel Tank Cap Venting System ..... 4 - 49
B-24 Replace the Engine Air Filter Element ..... 4 - 50
B-25 Replace the Spark Plugs - Ford Models ..... 4 - 51

https://truckmanualshub.com/

TABLE OF CONTENTS

Section Four **Scheduled Maintenance Procedures**, continued

C-1 Check the Engine Belt - Deutz Models ..... 4 - 52
C-2 Check the Engine Valve Clearances - Deutz Models ..... 4 - 53
C-3 Replace the Fuel Filter/Water Separator Element - Perkins Models ..... 4 - 53
C-4 Replace the Fuel Filter Element - Perkins Models ..... 4 - 55
C-5 Replace the Engine Oil and Filter - Perkins Models ..... 4 - 56
C-6 Check the Starting Aid - Perkins Models ..... 4 - 57
C-7 Check the Specific Gravity of Engine Coolant - Liquid Cooled Models ..... 4 - 58
C-8 Replace the PCV Valve - Ford Models ..... 4 - 59
D-1 Check the Boom Wear Pads ..... 4 - 60
D-2 Check the Extendable Axle Wear Pads ..... 4 - 60
D-3 Check the Free-wheel Configuration ..... 4 - 61
D-4 Check the Turntable Rotation Bearing Bolts ..... 4 - 62
D-5 Grease the Turntable Rotation Bearing and Rotate Gear ..... 4 - 63
D-6 Replace the Drive Hub Oil ..... 4 - 64
D-7 Replace the Engine Oil and Filter - Deutz Models ..... 4 - 65
D-8 Clean the Fuel Pump Strainer - Deutz Models ..... 4 - 67
D-9 Replace the Diesel Fuel Filter/Water Separator - Deutz & Perkins Models ... 4 - 68
D-10 Replace the Fuel Hoses - Deutz Models ..... 4 - 69
D-11 Check the Engine Valve Clearances - Perkins Models ..... 4 - 70
D-12 Clean the Engine Breather Assembly - Perkins Models ..... 4 - 70
E-1 Test or Replace the Hydraulic Oil ..... 4 - 71
E-2 Change or Recondition the Engine Coolant - Liquid Cooled Models ..... 4 - 73
E-3 Change the Fuel Hoses - Ford Models ..... 4 - 74
E-4 Replace the Engine Air Breather - Perkins Models ..... 4 - 76
E-5 Grease the Steer Axle Wheel Bearings - 2WD Models ..... 4 - 76
E-6 Check the Fuel Injectors - Perkins Models ..... 4 - 78

https://truckmanualshub.com/

TABLE OF CONTENTS

Section Five **Troubleshooting Flow Charts**

Introduction ..... 5 - 1

Fault Code Chart ..... 5 - 3

1 Engine Will Not Crank Over ..... 5 - 8

2 Engine Cranks Over But Will Not Start - Ford Models ..... 5 - 10

2A Engine Runs While Cranking Then Dies - Ford Models ..... 5 - 12

3 Engine Cranks Over But Will Not Start - Diesel Models ..... 5 - 13

4 Engine Will Not Start On LPG, But Will Start On Gasoline - Ford Models ..... 5 - 16

5 Engine Will Not Start On Gasoline, But Will Start On LPG - Ford Models ..... 5 - 18

6 Engine High Idle Inoperative - Ford Models ..... 5 - 19

7 Engine Low Idle Inoperative - Ford Models ..... 5 - 20

8 Engine High Idle Inoperative - Diesel Models ..... 5 - 21

9 Engine Low Idle Inoperative - Diesel Models ..... 5 - 23

10 All Functions Inoperative, Engine Starts and Runs ..... 5 - 24

11 All Lift and Steer Functions Inoperative, Drive Functions Operational ..... 5 - 25

12 Ground Controls Inoperative, Platform Controls Operate Normally ..... 5 - 26

13 Platform Controls Inoperative, Ground Controls Operate Normally ..... 5 - 27

14 Boom Up Function Inoperative ..... 5 - 28

15 Boom Down Function Inoperative ..... 5 - 31

16 Boom Extend Function Inoperative ..... 5 - 34

17 Boom Retract Function Inoperative ..... 5 - 37

18 Turntable Rotate Left Function Inoperative ..... 5 - 39

19 Turntable Rotate Right Function Inoperative ..... 5 - 43

https://truckmanualshub.com/

TABLE OF CONTENTS

Section Five **Troubleshooting Flow Charts,** continued

20 All Platform Leveling Functions Inoperative ..... 5 - 47
21 Platform Level Up Function Inoperative ..... 5 - 48
22 Platform Level Down Function Inoperative ..... 5 - 50
23 Platform Rotate Left Function Inoperative ..... 5 - 52
24 Platform Rotate Right Function Inoperative ..... 5 - 54
25 Jib Boom Up Inoperative, S-85 Models ..... 5 - 56
26 Jib Boom Down Inoperative, S-85 Models ..... 5 - 58
27 Drive Chassis Jack Function Inoperative ..... 5 - 60
28 Axle Extend/Retract Inoperative ..... 5 - 62
29 Steer Left Function Inoperative ..... 5 - 63
30 Steer Right Function Inoperative ..... 5 - 65
31 All Drive Functions Inoperative, All Other Functions Operate Normally ..... 5 - 67
32 Drive Forward Or Reverse Function Inoperative ..... 5 - 70
33 Traction Function Inoperative ..... 5 - 71
34 Machine Will Not Drive At Full Speed ..... 5 - 72
35 Machine Drives At Full Speed With Platform Raised or Extended ..... 5 - 73
36 Drive Enable System Is Malfunctioning ..... 5 - 74
37 Auxiliary Functions Inoperative ..... 5 - 75

https://truckmanualshub.com/

TABLE OF CONTENTS

Section Six **Schematics**

Introduction ..... 6 - 1
Electrical Components ..... 6 - 2
Electrical Symbols Legend ..... 6 - 4
Abbreviation Legend ..... 6 - 5
Engine Wire Harness - Ford Models ..... 6 - 7
Electrical Schematic - Ford Models ..... 6 - 8
Ground Control Box Wiring Diagram - Ford Models ..... 6 - 10
Platform Control Box Wiring Diagram - Ford Models ..... 6 - 11
Electrical Schematic - Deutz Models ..... 6 - 12
Ground Control Box Wiring Diagram - Deutz Models ..... 6 - 14
Platform Control Box Wiring Diagram - Deutz Models ..... 6 - 15
Electrical Schematic - Perkins Models ..... 6 - 16
Ground Control Box Wiring Diagram - Perkins Models ..... 6 - 18
Platform Control Box Wiring Diagram - Perkins Models ..... 6 - 19
Hydraulic Symbols Legend ..... 6 - 21
Hydraulic Schematic 2WD ..... 6 - 22
Hydraulic Schematic 4WD ..... 6 - 23

https://truckmanualshub.com/

TABLE OF CONTENTS

Section Seven **Repair Procedures**

Introduction ..... 7 - 1

Platform Controls

1-1 Joystick Controllers ..... 7 - 2

1-2 Horsepower Limiter Board ..... 7 - 9

1-3 Foot Switch ..... 7 - 11

1-4 Toggle Switches ..... 7 - 12

Platform Components

2-1 Platform ..... 7 - 13

2-2 Platform Leveling Slave Cylinder ..... 7 - 13

2-3 Platform Rotator ..... 7 - 15

Jib Boom Components, S-85 Models

3-1 Jib Boom ..... 7 - 18

3-2 Jib Boom Lift Cylinder ..... 7 - 19

Boom Components

4-1 Boom Cable Track ..... 7 - 21

4-2 Boom ..... 7 - 24

4-3 Boom Lift Cylinder ..... 7 - 27

4-4 Extension Cylinders ..... 7 - 28

4-5 Platform Leveling Master Cylinder ..... 7 - 30

Turntable Covers

5-1 Turntable Covers ..... 7 - 31

https://truckmanualshub.com/

Section Seven **Repair Procedures**, continued

Deutz F4L1011F Engine

6-1 RPM Adjustment ..... 7 - 32

6-2 Flex Plate ..... 7 - 32

6-3 Oil Temperature and Oil Pressure Gauges ..... 7 - 33

Perkins 704-30 Engine

7-1 RPM Adjustment ..... 7 - 34

7-2 Flex Plate ..... 7 - 34

7-3 Coolant Temperature and Oil Pressure Gauges ..... 7 - 35

Ford LRG 425 EFI Engine

8-1 RPM Adjustment ..... 7 - 36

8-2 Flex Plate ..... 7 - 36

8-3 Coolant Temperature and Oil Pressure Gauges ..... 7 - 37

Ground Controls

9-1 Control Relays ..... 7 - 39

9-2 Power Relay ..... 7 - 40

9-3 Toggle Switches, See 1-4, *Toggle Switches* ..... 7 - 12

9-3 Wago® Components ..... 7 - 41

9-5 Engine Fault Codes - Ford Models ..... 7 - 41

Hydraulic Pumps

10-1 Lift/Steer Pump ..... 7 - 43

10-2 Drive Pump ..... 7 - 44

https://truckmanualshub.com/

TABLE OF CONTENTS

Section Seven **Repair Procedures**, continued

Manifolds

11-1 Function Manifold Components ..... 7 - 46
11-2 Valve Adjustments - Function Manifold ..... 7 - 50
11-3 Turntable Rotation Manifold Components ..... 7 - 52
11-4 Chassis Jack Manifold Components ..... 7 - 53
11-5 Axle Extend Dump Manifold Components ..... 7 - 54
11-6 Steer Manifold Components ..... 7 - 55
11-7 2WD Drive Manifold Components ..... 7 - 56
11-8 Valve Adjustments - 2WD Drive Manifold ..... 7 - 57
11-9 4WD Drive Manifold Components ..... 7 - 58
11-10 Valve Adjustments - 4WD Drive Manifold ..... 7 - 60
11-11 Jib Boom/Platform Rotate Manifold Components - S-85 Models ..... 7 - 61
11-12 Brake/Two Speed Manifold Components ..... 7 - 62

Fuel and Hydraulic Tanks

12-1 Fuel Tank ..... 7 - 63
12-2 Hydraulic Tank ..... 7 - 64

Turntable Rotation Components

13-1 Rotation Hydraulic Motor ..... 7 - 67

https://truckmanualshub.com/

TABLE OF CONTENTS

Section Seven **Repair Procedures**, continued

2WD Steering Axle Components

14-1 Yoke and Hub ..... 7 - 70

14-2 Steering Cylinders ..... 7 - 72

14-3 Tie Rod Cylinder ..... 7 - 73

4WD Steering Axle Components

15-1 Yoke and Hub ..... 7 - 74

15-2 Steering Cylinders, See 14-2, *Steering Cylinders* ..... 7 - 75

15-3 Tie Rod Cylinder, See 14-3, *Tie Rod Cylinder* ..... 7 - 75

Extendable Axle Components

16-1 Extendable Axles ..... 7 - 76

16-2 Drive Chassis Lift Jacks ..... 7 - 80

16-3 Hydraulic Limit Switches ..... 7 - 80

Non-steering Axle Components

17-1 Drive Motor REV B ..... 7 - 82

17-2 Drive Hub REV B ..... 7 - 83

17-3 Wheel Brake ..... 7 - 84

https://truckmanualshub.com/

This page intentionally left blank.

https://truckmanualshub.com/

Specifications

Machine Specifications

Stowed dimensions	S-80	S-85
Length	36 ft 8 in 11.2 m	40 ft 7 in 12.4 m
Width, axles retracted	7 ft 11 1/2 in 2.4 m	7 ft 11 1/2 in 2.4 m
Width, axles extended	10 ft 3 m	10 ft 3 m
Height	9 ft 2 in 2.8 m	9 ft 2 in 2.8 m
Weight	33,380 lbs 15,141 kg	35,860 lbs 16,266 kg
Ground clearance	11 in 27.9 cm	11 in 27.9 cm
Operational dimensions		
Maximum platform height	80 ft 24.4 m	85 ft 25.9 m
Maximum horizontal reach	71 ft 11 in 21.9 m	76 ft 11 in 23.4 m
Maximum turntable tailswing	3 ft 8 1/2 in 113 cm	3 ft 8 1/2 in 113 cm
Wheelbase	9 ft 2.7 m	9 ft 2.7 m
Turning radius, inside (axles extended)	10 ft 7 1/2 in 3.23 m	10 ft 7 1/2 in 3.23 m
Turning radius, outside (axles extended)	23 ft 1 in 7.03 m	23 ft 1 in 7.03 m
Turntable rotation	continuous	continuous
Platform rotation	160°	160°
Maximum capacity 6 foot platform	600 lbs 272 kg	500 lbs 227 kg
Maximum capacity 8 foot platform	500 lbs 227 kg	500 lbs 227 kg
Maximum allowable side force (ANSI and CSA)	150 lbs 68 kg	150 lbs 68 kg

Platform dimensions	6 ft (Standard)	8 ft (Optional)
Length	72 in 182.8 cm	96 in 243.8 cm
Width	30 in 76.2 cm	36 in 91.4 cm
Tires and wheels		
Tire size		15-22.5 SAT
Tire ply rating		16
Tire contact area		71 sq in 458 sq cm
Overall tire diameter		113 in 729 cm
Tire pressure		100 psi 6.89 bar
Wheel diameter		22 1/2 in 57 cm
Wheel width		11 3/4 in 29.8 cm
Wheel lugs		10 @ 3/4 -16
Lug nut torque, dry bolts		420 ft-lbs 569.4 Nm
Lug nut torque, lubricated bolts		320 ft-lbs 433.9 Nm
Fluid capacities		
Fuel tank		33 gallons 124.9 liters
LPG tank		33.5 pounds 15.2 kg
Hydraulic tank		45 gallons 170 liters
Hydraulic system (including tank)		55 gallons 208 liters
Drive hubs		50 fl oz 1.63 liters
Turntable rotation drive hub		44 fl oz 1.3 liters

Continuous improvement of our products is a Genie policy. Product specifications are subject to change without notice.

https://truckmanualshub.com/

SPECIFICATIONS

Performance Specifications

Drive speeds, maximum	2WD	4WD
Drive speed, stowed Gasoline/LPG models	3.8 mph 6.1 km/h 40 ft/7.2 sec 12.2 m/7.2 sec	3.1 mph 4.9 km/h 40 ft/8.8 sec 12.2 m/8.8 sec
Drive speed, stowed Diesel models	3.3 mph 5.3 km/h 40 ft/8.3 sec 12.2 m/8.3 sec	3 mph 4.8 km/h 40 ft/9.1 sec 12.2 m/9.1 sec
Drive speed, raised or extended - all models	0.6 mph 1.0 km/h 40 ft/40 sec 12.2 m/40 sec	0.6 mph 1.0 km/h 40 ft/40 sec 12.2 m/40 sec

Gradeability (boom stowed)	2WD	4WD
Rough terrain	30%	38%

Boom function speeds, maximum from platform controls	
Jib boom up, (S-85 models)	60 to 70 seconds
Jib boom down, (S-85 models)	40 to 50 seconds
Boom up	90 to 120 seconds
Boom down	90 to 120 seconds
Boom extend	70 to 85 seconds
Boom retract	85 to 95 seconds
Turntable rotate, 360° boom fully retracted	80 to 120 seconds
Turntable rotate, 360° boom extended	210 to 240 seconds
Platform rotate, 160°	8 to 12 seconds
Platform level up	50 to 60 seconds
Platform level down	40 to 50 seconds

https://truckmanualshub.com/

SPECIFICATIONS

Hydraulic Specifications

Hydraulic fluid	Dexron equivalent
Drive pump	
Type: bi-directional variable displacement piston pump	
Displacement @ 2500 rpm	0 to 30.3 gallons per minute 0 to 114.7 liters per minute
Maximum drive pressure	3500 psi 241.3 bar
Charge pressure Neutral position Drive position	 290 psi 250 psi
	 20 bar 17 bar
Medium pressure filter	3 micron
Medium pressure filter bypass pressure	50 psi 3.4 bar
Drive manifold	
Brake relief pressure	250 psi 17.2 bar
Steer end drive motors	**4WD models**
Displacement per revolution	1.52 cu in 25 cc
Non-steer end drive motors	
Displacement per revolution, variable 4WD (2 speed motor)	0.16 to 2.8 cu in 2.62 to 45.9 cc
Displacement per revolution, variable 2WD	1.12 to 2.8 cu in 18.4 to 45.9 cc

Function pump	
Type: pressure balanced gear	
Displacement - static	1.4 cu in 19 cc
Displacement 2500 rpm	0 to 14 gpm 0 to 53 l/min
Hydraulic tank circuit return line filter	10 micron with 25 psi (1.7 bar) bypass
Function manifold	
Function relief valve pressure	2900 psi 200 bar
Boom down relief valve pressure	2300 psi 158.6 bar
Boom extend	2500 psi 172 bar
Steer/axle extend flow regulator	5 gallons per minute 18.9 liters per minute
Steer regulator	3.5 gallons per minute 13.2 liters per minute
Auxiliary pump	
Type: fixed displacement gear pump	
Displacement - static	0.152 cu in 2.5 cc
Displacement	1.4 gallons per minute 5.3 liters per minute
Auxiliary pump relief pressure	2500 psi 172 bar

https://truckmanualshub.com/

SPECIFICATIONS

Ford Engine LRG-425 EFI

Displacement	153 cu in 2.5 liters
Number of cylinders	4
Bore & stroke	3.78 x 3.4 inches 96.01 x 86.36 mm
Horsepower	70 @ 2500 rpm
Firing order	1 - 3 - 4 - 2
Low idle	1600 rpm
High idle	2500 rpm
Compression ratio	9.4:1
Compression pressure (approx.) Pressure (psi) of lowest cylinder must be at least 75% of highest cylinder	
Valve clearances - collapsed tappet	0.035 to 0.055 inches 0.889 to 1.397 mm
Lubrication system	
Oil pressure (operating temp. @ 2000 rpm)	40 to 60 psi 2.75 to 4.1 bar
Oil capacity (including filter)	5 quarts 4.7 liters
Oil viscosity requirements	
below 60°F / 15.5°C	5W-30
-10°F to 90°F / -23°C to 32°C	5W-30
above -10°F / -23°C	5W-50
above 25°F / -4°C	10W-30
Use oils meeting API classification SH or SG grade. Units ship with 10W-40 CC/SG.	

Starter motor	
Normal engine cranking speed	200 to 250 rpm
Current draw, normal load	140-200A
Current draw, maximum load	800A
Current draw, minimum	60-80A
Maximum circuit voltage drop while starting (normal temperature)	0.5V DC
Brush length, new	0.66 in 16.8 mm
Brush length wear limit	0.25 in 6.35 mm
Maximum commutator run-out	0.005 inches 0.127 mm
Battery	
Type	12V, Group 31
Quantity	1
Cold cranking ampere	1000A
Reserve capacity @ 25A rate	200 minutes
Electronic Fuel pump	
Fuel pressure, static	64 psi 4.4 bar
Fuel flow rate	0.58 gpm 2.18 l/min
Ignition System	
Spark plug type	Motorcraft AWSF-52-C
Spark plug gap	0.042 to 0.046 inches 1.07 to 1.18 mm
Engine coolant	
Capacity	11 1/2 quarts 10.9 liters
Alternator	
Output	95A, 14.5VDC

https://truckmanualshub.com/

SPECIFICATIONS

Deutz Engine F4L 1011F

Displacement	166.7 cu in 2.732 liters
Number of cylinders	4
Bore and stroke	3.58 x 4.13 inches 91 x 105 mm
Horsepower	56 @ 3000 rpm
Firing order	1 - 3 - 4 - 2
Compression ratio	18.5:1
Compression pressure	362 to 435 psi 25 to 30 bar
Low idle	1500 rpm
High idle	2300 rpm
Governor	centrifugal mechanical
Valve clearance, cold	
Intake	0.012 in 0.3 mm
Exhaust	0.020 in 0.5 mm
Lubrication system	
Oil pressure	26 to 87 psi 1.8 to 6 bar
Oil capacity (including filter)	11 quarts 10.5 liters
Oil viscosity requirements	
60°F / 15.5°C (synthetic)	5W-30
-10°F to 90°F / -23°C to 32°C	10W-40
above -4°F / -20°C	15W-40

Engine oil should have properties of API classification CC/SE or CC/SF grades.
Units ship with 10W-40 CC/SG.

Injection system	
Injection pump make	OMAP
Injection pump pressure	4351 psi 300 bar
Injector opening pressure	3626 psi 250 bar
Fuel requirement	diesel number 2-D
Alternator output	55A, 14 VDC
Starter motor	
Current draw, no load	90A
Brush length, new	0.748 in 19 mm
Brush length, minimum	0.5 in 12.7 mm
Battery	
Type	12 VDC, Group 31
Quantity	1
Cold cranking ampere	1000A
Reserve capacity @ 25A rate	200 minutes
Fan belt deflection	3/8 to 1/2 inch 9 to 12 mm

https://truckmanualshub.com/

SPECIFICATIONS

Perkins Engine 704-30

Displacement	183 cu in 2.9 liters
Number of cylinders	4
Bore and stroke	3.82 x 3.94 inches 97 x 100 mm
Horsepower	63 @ 2600 rpm
Firing order	1 - 3 - 4 - 2
Compression ratio	17.5:1
Compression pressure	300 to 500 psi 20.7 to 34.5 bar
Pressure (psi) of lowest cylinder must be within 50 psi (3.45 bar) of highest cylinder	
Low idle	1600 rpm
High idle	2200 rpm
Governor	centrifugal mechanical
Valve clearance, cold	
Intake	0.014 in 0.35 mm
Exhaust	0.014 in 0.35 mm
Lubrication system	
Oil pressure (at 2600 rpm)	41 psi 2.8 bar
Oil capacity (including filter)	7.3 quarts 8.3 liters
Oil viscosity requirements	
below 60°F / 15.5°C	15W-40
-10°F to 90°F / -23°C to 32°C	10W-30
above -4°F / -20°C	15W-40
Engine oil should have properties of API classification CF4. Units ship with 10-40 CC/SG.	

Injection system		
Injection pump make		Zexel PFR-KX
Injection pump pressure	2755 psi	190 bar
Injector opening pressure	3626 psi	250 bar
Fuel requirement		diesel number 2-D
Engine coolant		
Capacity		11 1/2 quarts 10.9 liters
Alternator output		65A, 12V DC
Battery		
Type		12VDC, Group 31
Quantity		1
Cold cranking ampere		1000A
Reserve capacity @ 25A rate		200 minutes
Fan belt deflection		3/8 in 10 mm

https://truckmanualshub.com/

SPECIFICATIONS

Hydraulic Hose and Fitting Torque Specifications

Your machine is equipped with Parker Seal-Lok® O-ring face seal fittings and hose ends. Machines that utilize Parker Seal-Lok® O-ring face seal hoses and fittings require that the fittings and hose ends be torqued to specification when they are removed and installed or when new hoses or fittings are installed.

Hydraulic Hose and Fitting Torque Specifications						
SAE O-ring Boss Port - tube fitting				**Seal-Lok® -** hose end		
SAE Dash Size	Installing into...	ft. lbs.	Nm	SAE Dash Size	ft. lbs.	Nm
-4	Aluminum	11	14.9	-4	18	24.4
	Steel	16	21.7	-6	27	36.6
-6	Aluminum	23	31.2	-8	40	54.2
	Steel	35	47.5	-10	63	85.4
-8	Aluminum	40	54.2	-12	90	122
	Steel	60	81.3	-16	120	162.7
-10	Aluminum	69	93.6	-20	140	190
	Steel	105	142.4	-24	165	223.7
-12	Aluminum	93	126.1			
	Steel	140	190			
-16	Aluminum	139	188.5			
	Steel	210	284.7			
-20	Aluminum	172	233.2			
	Steel	260	352.5			
-24	Aluminum	208	282			
	Steel	315	427.1			

Torque Procedure

1 Replace the O-ring. The O-ring must be replaced anytime the seal has been broken. The O-ring cannot be re-used if the fitting or hose end has been tightened beyond finger tight.

NOTICE The O-rings used in the Parker Seal Lok® fittings and hose ends are a custom-size O-ring. They are not a standard SAE size O-ring. They are available in the O-ring field service kit (Genie part no. 49612).

2 Lubricate the O-ring before installation.

3 Be sure that the face seal O-ring is seated and retained properly.

4 Position the tube and nut squarely on the face seal end of the fitting and tighten the nut finger tight.

5 Tighten the nut or fitting to the appropriate torque per given size as shown in the table above.

6 Operate all machine functions and inspect the hoses and fittings and related components to be sure that there are no leaks.

https://truckmanualshub.com/

This page intentionally left blank.

https://truckmanualshub.com/

Theory Of Operation

Power Source

The Genie S-80 and Genie S-85 are powered by either a Gasoline/LPG engine or one of two diesel engines. The Gasoline/LPG option uses a Ford LRG-425 EFI rated at 70 horsepower @ 2500 rpm. The diesel options include a Deutz F4L1011F rated at 56 horsepower @ 3000 rpm, and a Perkins 704-30 rated at 63 horsepower @ 2600 rpm.

Hydraulic System

All machine functions are performed by the hydraulic system. The hydraulic system is divided into two groups: Boom/Steer functions and Drive functions.

Boom/Steer functions are powered by a single-section gear pump, rated at 14 gpm (53 L/min). When the engine is running, this pump supplies hydraulic fluid under pressure to the function manifold, where the directional and flow control valves are located. To protect from over-pressurization of the Boom/Steer system, the pump is provided with a pressure relief valve, set at 2900 psi (200 bar).

Drive functions are powered by a bi-directional, variable output piston pump rated at 0 to 30.3 gpm (0 to 114.7 L/min) @ 2500 rpm. Two internal 3500 psi (241 bar) relief valves are used to prevent over-pressurization of the closed loop drive system.

The boom lift cylinder, boom extend cylinder, platform leveling slave cylinder, platform rotator and jib boom cylinder (S-85 models) incorporate counterbalance valves to prevent movement in the event of a hydraulic line failure.

Electrical System

Boom/Steer functions are accomplished by moving a toggle switch or a controller, which sends voltage to the appropriate directional control valve. These directional valves determine which direction the hydraulic fluid will travel. The volume of hydraulic fluid is determined by either a proportional valve or flow regulator valve. A proportional valve receives a variable voltage signal and delivers more hydraulic fluid as the voltage increases. A flow regulator valve is a mechanical valve and delivers a predetermined amount of hydraulic fluid.

Drive forward or reverse is accomplished by pressing down the foot switch in the platform and moving the drive controller (joystick) in the appropriate direction. When activated, the drive controller completes a circuit to the Electronic Displacement Controller (EDC). The EDC regulates drive pump displacement in direct relation to the drive controller position. A horsepower limiter printed circuit board (located in the platform control box) is provided to maintain engine RPM as drive system loads become greater. This is done by sensing engine RPM (via an AC tap on the alternator) and limiting the amount of current supplied to the drive controller/EDC, which de-strokes the pump, reducing pump output.

https://truckmanualshub.com/

THEORY OF OPERATION

Limit switches

There are two types of limit switches which are found in various locations on the machine: drive speed limit switches and a drive enable limit switch. The function of a drive speed limit switch is to limit the raised or extended drive speed to 0.6 miles per hour (1 km/h) when the primary boom is raised more than 2 feet (0.6 m) OR when the primary boom is extended more than 36 inches (0.9 m). The function of the drive enable limit switch is to limit the ability of the machine to drive when the boom is rotated beyond the non-steer wheels.

Machine Controls

The Genie S-80 and Genie S-85 machines are equipped with operational controls which are found in two locations: the ground controls, located on the tank side of the machine, and the platform controls, located in the platform. All lift and drive functions are available at the platform controls. Only boom functions are available at the ground controls.

Ground controls are activated by holding the function enable toggle switch to either side, then moving a boom function toggle switch in the direction indicated on the control panel decal. This will determine which boom function will operate and its direction of travel.

Platform controls use toggle switches and boom function controllers (joysticks) to operate the boom functions. The drive controller (joystick) regulates the drive pump displacement through the EDC in direct relation to the drive controller position. A thumb rocker switch on the top of the drive controller is used for steering.

NOTICE Washing electronic components is not suggested. Instead, use compressed air to remove debris.

https://truckmanualshub.com/

Scheduled Maintenance Procedures

Observe and Obey:

- ☑ Maintenance inspections shall be completed by a person trained and qualified on the maintenance of this machine.
- ☑ Scheduled maintenance inspections shall be completed daily, quarterly, annually and every 2 years as specified on the *Maintenance Inspection Report.*

⚠WARNING Failure to perform each procedure as presented and scheduled may cause death, serious injury or substantial machine damage.

- ☑ Immediately tag and remove from service a damaged or malfunctioning machine.
- ☑ Repair any machine damage or malfunction before operating machine.
- ☑ Keep records on all inspections for three years.
- ☑ Unless otherwise specified, perform each procedure with the machine in the following configuration:
  - Machine parked on a flat, level surface
  - Boom in the stowed position
  - Turntable rotated with the boom between the non-steering wheels
  - Turntable secured with the turntable rotation lock pin
  - Key switch in the OFF position with the key removed
  - Wheels chocked

About This Section

This section contains detailed procedures for each scheduled maintenance inspection.

Each procedure includes a description, safety warnings and step-by-step instructions.

Symbols Legend

⚠ Safety alert symbol—used to alert personnel to potential personal injury hazards. Obey all safety messages that follow this symbol to avoid possible injury or death.

⚠DANGER Red—used to indicate the presence of an imminently hazardous situation which, if not avoided, will result in death or serious injury.

⚠WARNING Orange—used to indicate the presence of a potentially hazardous situation which, if not avoided, could result in death or serious injury.

⚠CAUTION Yellow with safety alert symbol—used to indicate the presence of a potentially hazardous situation which, if not avoided, may result in minor or moderate injury.

CAUTION Yellow without safety alert symbol—used to indicate the presence of a potentially hazardous situation which, if not avoided, may result in property damage.

NOTICE Green—used to indicate operation or maintenance information.

⊙ Indicates that a specific result is expected after performing a series of steps.

https://truckmanualshub.com/

SCHEDULED MAINTENANCE PROCEDURES

Maintenance Symbols Legend

NOTICE The following symbols have been used in this manual to help communicate the intent of the instructions. When one or more of the symbols appear at the beginning of a maintenance procedure, it conveys the meaning below.

Indicates that tools will be required to perform this procedure.

Indicates that new parts will be required to perform this procedure.

Indicates that a cold engine will be required to perform this procedure.

Indicates that a warm engine will be required to perform this procedure.

Indicates that dealer service is required to perform this procedure.

Maintenance Schedule

There are five types of maintenance inspections that must be performed according to a schedule—daily, quarterly, six months, annual, and two year. The *Scheduled Maintenance Procedures Section* and the *Maintenance Inspection Report* have been divided into five subsections—A, B, C, D and E. Use the following chart to determine which group(s) of procedures are required to perform a scheduled inspection.

Inspection	Table or Checklist
Daily or every 8 hours	A
Quarterly or every 250 hours	A + B
Six month or every 500 hours	A + B + C
Annual or every 1000 hours	A + B + C + D
Two year or every 2000 hours	A + B + C + D + E

Maintenance Inspection Report

The maintenance inspection report contains checklists for each type of scheduled inspection.

Make copies of the *Maintenance Inspection Report* to use for each inspection. Store completed forms for three years.

https://truckmanualshub.com/

Maintenance Inspection Report

Model

Serial number

Date

Hour meter

Machine owner

Inspected by (print)

Inspector signature

Inspector title

Inspector company

Instructions

- Make copies of this report to use for each inspection.
- Select the appropriate checklist(s) for the type of inspection to be performed.

☐	**Daily or 8 hour Inspection:**	**A**
☐	**Quarterly or 250 hour Inspection:**	**A+B**
☐	**Six Month or 500 hour Inspection:**	**A+B+C**
☐	**Annual or 1000 hour Inspection:**	**A+B+C+D**
☐	**2 Year or 2000 hour Inspection:**	**A+B+C+D+E**

- Place a check in the appropriate box after each inspection procedure is completed.
- Use the step-by-step procedures in section 4 to learn how to perform these inspections.
- If any inspection receives an “N”, tag and remove the machine from service, repair and re-inspect it. After repair, place a check in the “R” box.

Legend

Y = yes, acceptable

N = no, remove from service

R = repaired

Comments

Checklist A	**Y**	**N**	**R**
A-1 Manuals			
A-2 Decals and placards			
A-3 Damage and loose or missing parts			
A-4 Engine oil level			
A-5 Engine coolant-Liquid cooled models			
A-6 Fuel leaks			
A-7 Hydraulic oil level			
A-8 Hydraulic leaks			
A-9 Tire pressure			
A-10 Extendable axles			
A-11 Platform and ground controls			
A-12 Auxiliary power			
A-13 Tilt sensor			
A-14 Limit switches			
A-15 Drain filter/separator Diesel models			
A-16 Air filter			
A-17 30 Day Service			
Perform every 100 hours:			
A-18 Radiator-Liquid cooled models			
A-19 Battery			
A-20 Replace engine oil and filter-Ford models			
A-21 Electrical wiring			
Perform every 125 hours:			
A-22 Oil cooler and fins-Deutz models			
Perform every 200 hours:			
A-23 Check engine belt - Ford/Perkins models			
A-24 Fuel filter-Ford models			

Checklist B	**Y**	**N**	**R**
B-1 Exhaust system			
B-2 Hydraulic tank return filter condition			
B-3 Tires and wheels			
B-4 Brake configuration			
B-5 Drive hub oil level			
B-6 Engine RPM			
B-7 Key switch			
B-8 Emergency Stop			
B-9 Ground control override			
B-10 Platform leveling			
B-11 Horn			
B-12 Foot switch			
B-13 Engine idle select			
B-14 Fuel select-Ford models			
B-15 Drive enable system			
B-16 Drive brakes			
B-17 Drive speed-stowed			
B-18 Drive speed-raised or extrended			
B-19 Alarm package			
B-20 Hydraulic oil analysis			
B-21 Replace hydraulic tank return filter			
B-22 Drive loop hydraulic filter			
B-23 Inspect fuel tank cap venting system			
Perform every 400 hours:			
B-24 Replace engine air filter			
B-25 Replace spark plugs-Ford models			

https://truckmanualshub.com/

MAINTENANCE INSPECTION REPORT

Instructions

- Make copies of this report to use for each inspection.
- Select the appropriate checklist(s) for the type of inspection to be performed.

☐	**Daily or 8 hour Inspection:**	**A**
☐	**Quarterly or 250 hour Inspection:**	**A+B**
☐	**Six Month or 500 hour Inspection:**	**A+B+C**
☐	**Annual or 1000 hour Inspection:**	**A+B+C+D**
☐	**2 Year or 2000 hour Inspection:**	**A+B+C+D+E**

- Place a check in the appropriate box after each inspection procedure is completed.
- Use the step-by-step procedures in section 4 to learn how to perform these inspections.
- If any inspection receives an “N”, tag and remove the machine from service, repair and re-inspect it. After repair, place a check in the “R” box.

Legend

Y = yes, acceptable

N = no, remove from service

R = repaired

Comments

Checklist C	**Y**	**N**	**R**
C-1 Engine belt-Deutz models			
C-2 Valves-Deutz models			
C-3 Fuel filter/water separator-Perkins models			
C-4 Fuel filter-Perkins models			
C-5 Replace engine oil and filter-Perkins models			
C-6 Starting aid-Perkins models			
C-7 Check the coolant-Liquid cooled models			
C-8 PCV valve-Ford models			

Checklist D	**Y**	**N**	**R**
D-1 Boom wear pads			
D-2 Extendable axles			
D-3 Free-wheel configuration			
D-4 Turntable bearing bolts			
D-5 Grease rotation bearing			
D-6 Drive hub oil			
D-7 Replace engine oil and filter-Deutz models			
D-8 Fuel strainer-Deutz models			
D-9 Fuel filter/water separator-Diesel models			
D-10 Change fuel hoses-Deutz models			
D-11 Valves-Perkins models			
D-12 Clean engine breather-Perkins models			

Checklist E	**Y**	**N**	**R**
E-1 Hydraulic oil			
E-2 Engine coolant-Liquid cooled models			
E-3 Fuel hoses-Ford models			
E-4 Replace engine breather-Perkins models			
E-5 Wheel bearings			
Perform every 3000 hours:			
E-6 Fuel injectors-Perkins models			

https://truckmanualshub.com/

Table A Procedures

A-1 Inspect the Operators and Safety Manuals

Maintaining the operator's and safety manuals in good condition is essential to safe machine operation. Manuals are included with each machine and should be stored in the container provided in the platform. An illegible or missing manual will not provide safety and operational information necessary for a safe operating condition.

1 Check to be sure that the storage container is present and in good condition.

2 Check to make sure that the operator's, responsibilities and safety manuals are present and complete in the storage container in the platform.

3 Examine the pages of each manual to be sure that they are legible and in good condition.

4 Always return the manuals to the storage container after use.

NOTICE Contact your authorized Genie distributor or Genie Industries if replacement manuals are needed.

A-2 Inspect the Decals and Placards

Maintaining all of the safety and instructional decals and placards in good condition is mandatory for safe machine operation. Decals alert operators and personnel to the many possible hazards associated with using this machine. They also provide users with operation and maintenance information. An illegible decal will fail to alert personnel of a procedure or hazard and could result in unsafe operating conditions.

1 Refer to the *Decals* section in the *Genie S-80 & Genie S-85 Operator's Manual* and use the decal list and illustrations to determine that all decals and placards are in place.

2 Inspect all decals for legibility and damage. Replace any damaged or illegible decal immediately.

NOTICE Contact your authorized Genie distributor or Genie Industries if replacement decals are needed.

https://truckmanualshub.com/

TABLE A PROCEDURES

A-3
Inspect for Damage and Loose or Missing Parts

Daily machine condition inspections are essential to safe machine operation and good machine performance. Failure to locate and repair damage, and discover loose or missing parts may result in an unsafe operating condition.

1 Inspect the entire machine for damage and improperly installed or missing parts including:

- Electrical components, wiring and electrical cables
- Hydraulic hoses, power units, fittings, cylinders and manifolds
- Fuel and hydraulic tanks
- Drive and turntable motors and drive hubs
- Boom wear pads
- Tires and wheels
- Engine and related components
- Limit switches, alarms, horn and beacon
- Nuts, bolts and other fasteners
- Platform entry mid-rail or gate

Check entire machine for:

- Cracks in welds or structural components
- Dents or damage to machine
- Battery and connections
- Compartment covers and latches

Be sure that all structural and other critical components are present and all associated fasteners and pins are in place and properly tightened.

After you complete each inspection, be sure that all compartment covers are in place and secured.

https://truckmanualshub.com/

TABLE A PROCEDURES

A-4
Check the Engine Oil Level

Maintaining the proper engine oil level is essential to good engine performance and service life. Operating the machine with an improper oil level can damage engine components.

NOTICE Check the oil level with the engine off.

1 Check the engine oil dipstick.

Ford Models:

- Result: The oil level should be within the "safe" marks on the dipstick.

Deutz Models:

- Result: The oil level should be within the two marks on the dipstick.

Perkins Models:

- Result: The oil level should be within the two notches on the dipstick.

Ford LRG-425 EFI Engine **Oil capacity (including filter)**	4.5 quarts 4.3 liters
Oil viscosity requirements	
below 60°F / 15.5°C	5W-30
-10° to 90°F / -23° to 32°C	5W-30
above -10°F / -23°C	5W-30
above 25°F / -4°C	10W-30
Use oils meeting API classification SH or SG grade. Units ship with 10-40 CC/SG.	

Deutz F4L 1011F Engine **Oil capacity (including filter)**	8.5 quarts 8 liters
Oil viscosity requirements	
below 60°F / 15.5°C (synthetic)	5W-30
-10°F to 90°F / -23°C to 32°C	10W-40
above -4°F / -20°C	15W-40
Engine oil should have properties of API classification CC/SE or CC/SF grades. Units ship with 10-40 CC/SG.	

Perkins 704-30 Engine **Oil capacity (including filter)**	9.6 quarts 9 liters
Oil viscosity requirements	
below 60°F / 15.5°C	15W-40
-10°F to 90°F / -23°C to 32°C	10W-30
above -4°F / -20°C	15W-40
Engine oil should have properties of API classification CF4 grade. Units ship with 10-40 CC/SG.	

https://truckmanualshub.com/

TABLE A PROCEDURES

A-5
Check the Engine Coolant Level - Liquid Cooled Models

Maintaining the engine coolant at the proper level is essential to engine service life. Improper coolant level will affect the engine's cooling capability and damage engine components. Daily checks will allow the inspector to identify changes in coolant level that might indicate cooling system problems.

CAUTION Burn hazard. Beware of hot engine parts and coolant. Contact with hot engine parts and/or coolant may cause severe burns.

1 Check the fluid level in the coolant recovery tank. Add fluid as needed.

⊙ Result: The fluid level should be at the FULL mark.

NOTICE Do not remove the radiator cap.

A-6
Check for Fuel Leaks

Failure to detect and correct fuel leaks will result in an unsafe condition. An explosion or fuel fire may cause death or serious injury.

DANGER Explosion and fire hazard. Engine fuels are combustible. Inspect the machine in an open, well-ventilated area away from heaters, sparks, flames and lighted tobacco. Always have an approved fire extinguisher within easy reach.

1 Open the shutoff valve on the liquid petroleum gas (LPG) tank by turning it counterclockwise (if equipped).

https://truckmanualshub.com/

2 Perform a visual inspection around the following areas.

Ford models:

- LPG tank, hoses and fittings, solenoid shutoff valve, LPG regulator and throttle body.

NOTICE An LPG detector may be necessary to locate LPG leaks.

- Gasoline tank, manual shutoff valve, fuel pump, fuel filters, fuel rail and fuel injectors, hoses and fittings and throttle body.

Diesel models:

- Fuel tank, shutoff valve, hoses and fittings, fuel pump, fuel filter, fuel injection pumps and fuel injectors (atomizers).

⚠ DANGER Explosion and fire hazard. If a fuel leak is discovered, keep any additional personnel from entering the area and do not operate the machine. Repair the leak immediately.

A-7
Check the Hydraulic Oil Level

Maintaining the hydraulic oil at the proper level is essential to machine operation. Improper hydraulic oil levels can damage hydraulic components. Daily checks allow the inspector to identify changes in oil level that might indicate the presence of hydraulic system problems.

1 Be sure that the boom is in the stowed position, then visually inspect the sight gauge located on the side of the hydraulic oil tank.

⊙ Result: The hydraulic oil level should be within the top 2 inches (5 cm) of the sight gauge.

2 Add oil as needed.

Hydraulic oil specifications	
Hydraulic oil type	Dexron equivalent
Tank capacity	45 gallons 170 liters
Hydraulic system (including tank)	55 gallons 208 liters

https://truckmanualshub.com/

TABLE A PROCEDURES

A-8
Check for Hydraulic Leaks

Detecting hydraulic fluid leaks is essential to operational safety and good machine performance. Undiscovered leaks can develop into hazardous situations, impair machine functions and damage machine components.

WARNING Bodily injury hazard. Spraying hydraulic oil can penetrate and burn skin.

1 Inspect for hydraulic oil puddles, dripping or residue on or around the following areas:
   - Hydraulic tank—filter, fittings, hoses, auxiliary power unit, filters, and turntable surface
   - Engine compartment—hydraulic filters, fittings, hoses, pumps, component tray
   - All hydraulic cylinders
   - All hydraulic manifolds
   - Primary, and jib booms
   - The underside of the turntable
   - The underside of the drive chassis
   - Ground area under the machine

A-9
Check the Tire Pressure

WARNING Bodily injury hazard. An over-inflated tire can explode and could cause death or serious injury.

WARNING Tip-over hazard. Do not use temporary flat tire repair products.

NOTICE This procedure does not need to be performed on machines equipped with the foam-filled tire option.

To safeguard maximum stability, achieve optimum machine handling and minimize tire wear, it is essential to maintain proper pressure in all air-filled tires.

1 Check each tire with an air pressure gauge. Add air as needed.

Tire specifications	
Tire size	15-19.5 NHS
Pressure	100 psi 6.9 bar

https://truckmanualshub.com/

A-10
Test the Extendable Axles

DANGER Tip over hazard. Do not raise or extend the boom unless both axles are extended. If the axle extension system is not operating correctly, the stability of the machine is compromised and it may tip over.

NOTICE Be sure the axles are retracted before performing this procedure.

1 Start the engine from the ground controls.

2 Hold the function enable switch to either side and activate the boom up function.

⊙ Result: The boom should raise to horizontal and then stop. The boom should not raise above the limit switch unless both axles are extended.

3 Hold the function enable switch to either side and activate the boom down function.

⊙ Result: The boom should lower and return to the stowed position.

4 Hold the function enable switch to either side and activate the boom extend function.

⊙ Result: The boom should extend no more than 36 inches (0.9 m) and then stop. The boom should not extend beyond the limit switch unless both axles are extended.

5 Hold the function enable switch to either side and activate the boom retract function.

⊙ Result: The boom should retract.

6 At the extendable axle controls located at the non-steer end of the drive chassis, activate the steer axle drive chassis lift jack cylinder.

⊙ Result: The cylinder should extend and the drive chassis should raise smoothly, free of hesitation.

7 Continue holding the chassis jack in the extended position and activate the steer axle EXTEND control handle to extend the steer axle.

⊙ Result: The cylinder should extend and the steer axle should extend smoothly, free of hesitation.

8 Return the chassis jack control handle to the neutral position.

⊙ Result: The lift jack cylinder should fully retract when the control handle is returned to neutral.

9 Activate the non-steer axle drive chassis lift jack cylinder.

⊙ Result: The cylinder should extend and the drive chassis should raise smoothly, free of hesitation.

10 Continue holding the chassis jack in the extended position and activate the non-steer axle EXTEND control handle to extend the steer axle.

⊙ Result: The cylinder should extend and the non-steer axle should extend smoothly, free of hesitation.

11 Return the chassis jack control handle to the neutral position.

⊙ Result: The lift jack cylinder should fully retract when the control handle is returned to neutral.

https://truckmanualshub.com/

TABLE A PROCEDURES

A-11
Test the Platform and Ground Controls

Testing the machine functions and the Emergency Stop buttons for malfunctions is essential for safe machine operation. An unsafe working condition exists if any function fails to operate properly or either Emergency Stop button fails to stop all the machine functions and shut off the engine. Each function should activate, operate smoothly and be free of hesitation, jerking and unusual noise.

1 Pull out the Emergency Stop button at the ground controls to the ON position.

2 Start the engine from the ground controls.

3 Do not hold the function enable switch to either side. Attempt to activate each boom and platform function toggle switch.

⊙ Result: All boom and platform functions should **not** operate.

4 Hold the function enable switch to either side and activate each boom and platform function toggle switch.

⊙ Result: All boom and platform functions should operate through a full cycle. Descent alarm (if equipped) should sound while the boom is lowering.

5 Push in the Emergency Stop button to the OFF position.

⊙ Result: No function should operate, the engine should stop.

NOTICE Machines equipped with Platform Level Control Disable Function: The platform level toggle switch will not operate when the boom is raised or extended past the drive speed limit switches.

NOTICE Diesel models: All functions should stop immediately. The engine will shut off after 2 to 3 seconds.

6 Start the engine from the platform controls and move the lift/drive selector switch to the lift position (if equipped).

7 Do not press down on the foot switch.

8 Attempt to operate all machine functions.

⊙ Result: All machine functions should **not** operate.

9 Press down the foot switch and activate each machine function.

⊙ Result: All machine functions should operate through a full cycle.

10 Push in the Emergency Stop button to the OFF position at the platform controls.

⊙ Result: No function should operate, the engine should stop.

NOTICE As a safety feature, selecting and operating the ground controls will override the platform controls, including the Emergency Stop switch.

NOTICE Diesel models:
All functions should stop immediately. The engine will shut off after 2 to 3 seconds.

https://truckmanualshub.com/

A-12
Test the Auxiliary Power Operation

Detection of auxiliary power system malfunctions is essential for safe machine operation. An unsafe working condition exists if the auxiliary powered functions do not operate in the event of a main power loss. When operating the machine on engine power, selecting auxiliary power will stop the engine immediately. Auxiliary power is designed for short term use only, and excessive use will result in battery drain and component damage.

1 Turn the key switch to ground control and pull out the Emergency Stop button to the ON position.

2 Lift the red auxiliary power toggle switch cover (if equipped).

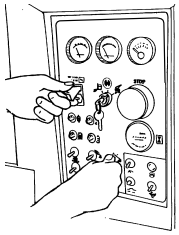

3 Simultaneously hold the auxiliary power toggle switch ON and activate each boom function toggle switch.

⊙ Result: All boom functions should operate.

NOTICE To conserve battery power, test each function through a partial cycle.

4 Turn the key switch to platform control.

5 Pull out the Emergency Stop button to the ON position at the platform controls, then press down the foot switch.

6 Lift the red auxiliary power toggle switch cover (if equipped).

7 Simultaneously hold the auxiliary power toggle switch ON and activate each function controller or toggle switch.

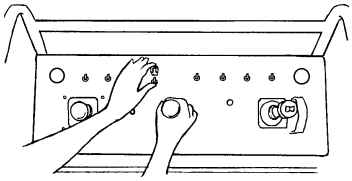

⊙ Result: All boom and steer functions should operate. Drive functions should not operate with auxiliary power.

NOTICE To conserve battery power, test each function through a partial cycle.

10 Start the engine from the platform controls.

11 Press down the foot switch, then lift the red auxiliary power toggle switch cover (if equipped).

12 Hold the auxiliary power toggle switch in the ON position.

⊙ Result: The engine should stop.

13 Start the engine from the ground controls.

14 Lift the red auxiliary power toggle switch cover (if equipped).

15 Hold the auxiliary power toggle switch in the ON position.

⊙ Result: The engine should stop.

https://truckmanualshub.com/

TABLE A PROCEDURES

A-13
Test the Tilt Sensor

The tilt sensor sounds an alarm located in the platform when the incline of the turntable exceeds the rating on the serial plate.

NOTICE Select a level test area. The tilt alarm should not be sounding prior to the test.

1 Start the engine from the platform controls.

2 Open the tank side turntable cover and press down on one side of the tilt sensor.

⊙ Result: The alarm in the platform should sound.

⚠WARNING Tip-over hazard. The alarm should be audible at the ground controls. If the alarm is not audible at the ground controls, replace the alarm in the platform.

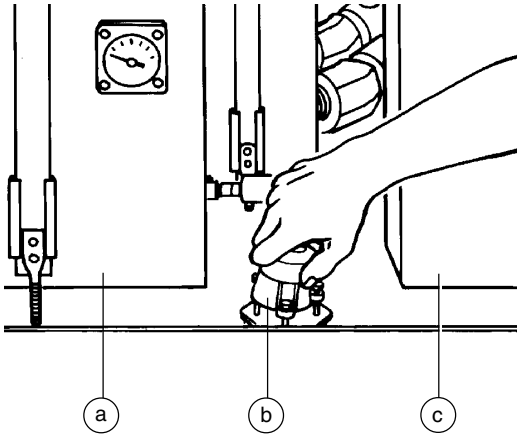

a fuel tank
b tilt sensor
c ground control box

A-14
Test the Limit Switches

Drive Limit Switches

Detecting limit switch malfunctions is essential to safe machine operation. The drive limit switches are used to restrict drive speed when the boom is raised or extended. An improperly functioning drive limit switch will allow the machine to operate in an unsafe position.

1 Remove the cover from the rear of the turntable to access the drive limit switch.

2 Visually inspect the boom up drive limit switch (LS2) mounted to the turntable riser at the pivot end of the boom. Inspect for the following:

· Broken or missing roller or arm

· Loose or missing fasteners

· Loose wiring

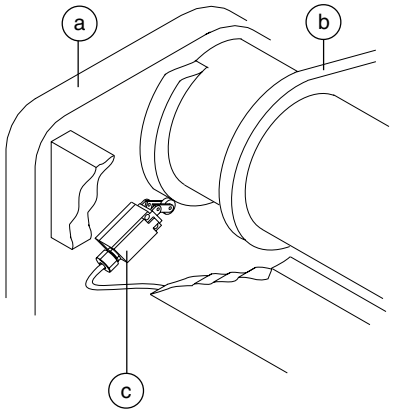

a turntable riser
b boom
c boom up drive limit switch (LS2)

https://truckmanualshub.com/

TABLE A PROCEDURES

3 Manually activate the boom up drive limit switch.

⊙ Result: The boom up drive limit switch arm should move freely and spring return to center. A distinct click should be felt and heard.

4 Visually inspect the boom extend drive limit switch located at the end of the cable track on the boom. Inspect for the following:

· Broken or missing roller or arm

· Missing fasteners

· Loose wiring

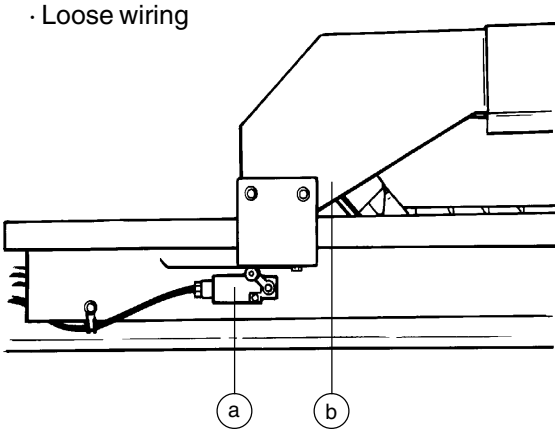

a boom extend drive limit switch (LS1)
b cable track

5 Start the engine from the ground controls.

6 Extend the boom approximately 3 feet (0.9 m).

7 Manually activate the boom extend drive limit switch (LS1).

⊙ Result: The boom extend drive limit switch arm should move freely and spring return to center. A distinct click should be felt and heard.

8 Turn the key switch to platform controls and fully retract the boom.

9 Move the lift/drive selector switch to the drive position (if equipped).

10 Press down the foot switch and slowly move the drive controller off center.

⊙ Result: The machine should move at normal drive speeds.

11 Move the lift/drive selector switch to the lift position (if equipped).

12 Raise the boom to just above horizontal.

13 Move the lift/drive selector switch to the drive position (if equipped).

14 Slowly move the drive controller off center.

⊙ Result: The machine should move at a reduced drive speed.

15 Move the lift/drive selector switch to the lift position (if equipped).

16 Lower the boom to the stowed position, then extend the boom 3 feet (0.9 m).

17 Move the lift/drive selector switch to the drive position (if equipped).

18 Slowly move the drive controller off center.

⊙ Result: The machine should move at a reduced drive speed.

Drive speed, maximum, raised or extended position	
All models	1 foot per second (0.6 mph) 0.3 meters per second (0.97 km/h)

https://truckmanualshub.com/

TABLE A PROCEDURES

Drive Enable Limit Switch

A properly functioning drive enable limit switch is essential for safe machine operation and workplace safety. The drive enable limit switch stops the drive function when the boom is rotated past a non-steer wheel and alerts the operator that the machine may drive in the opposite direction that the drive and steer controller is moved.

1 Start the engine from the platform controls and rotate the turntable to the left until the boom is past the left non-steer wheel. Turn the engine off.

2 Visually inspect the drive enable limit switch for the following:

· Broken or missing roller or arm

· Missing fasteners

· Loose wiring

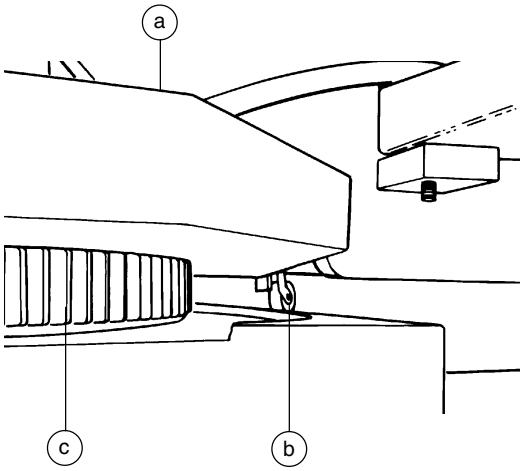

a turntable
b drive enable limit switch (LS3)
c turntable rotation bearing

3 Manually activate the drive enable limit switch.

⊙ Result: The drive enable limit switch arm should move freely and spring return to center. A distinct click should be felt and heard.

4 Start the engine from the platform controls, and press down the foot switch.

⊙ Result: The drive enable indicator light should be on.

5 Rotate the turntable so the boom is between the non-steer wheels.

⊙ Result: The drive enable indicator light should be off and drive function should operate.

6 Rotate the turntable to the left until the boom is past the left non-steer wheel.

⊙ Result: The drive enable indicator light should be on. Drive function should not operate until the drive enable override toggle switch is activated.

7 Rotate the turntable to the right until the boom is past the right non-steer wheel.

⊙ Result: The drive enable indicator light should be on. Drive function should not operate until the drive enable override toggle switch is activated.

https://truckmanualshub.com/

A-15
Drain the Fuel Filter/ Water Separator - Diesel Models

Proper maintenance of the fuel filter/water separator is essential for good engine performance. Failure to perform this procedure can lead to poor engine performance and component damage.

DANGER Explosion and fire hazard. Engine fuels are combustible. Perform this procedure in an open, well-ventilated area away from heaters, sparks, flames and lighted tobacco. Always have an approved fire extinguisher within easy reach.

NOTICE Perform this procedure with the engine off.

Perkins Models:

1 Open the engine side turntable cover and locate the fuel filter/water separator.

2 Loosen the vent plug located on the fuel filter/ water separator head.

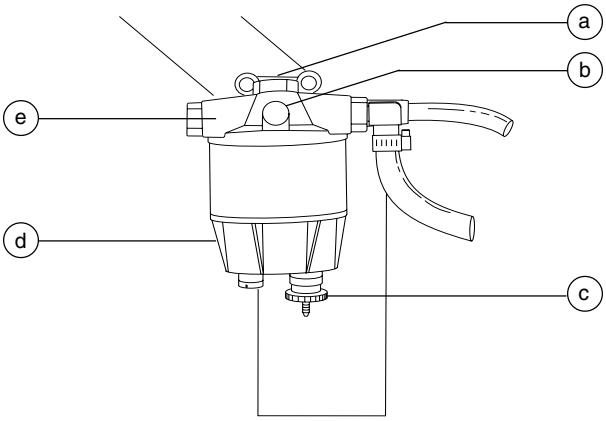

Fuel filter/water separator
a head bolt
b vent plug
c drain plug
d filter bowl
e separator head

3 Loosen the drain plug located at the bottom of the bowl. Allow the water to drain into a suitable container until fuel starts to come out. Immediately tighten the drain plug.

4 Tighten the vent plug.

NOTICE If the fuel filter/water separator is completely drained, you must prime the fuel filter/water separator before starting the engine. Refer to C-4 in this section, *Replace The Fuel Filter Element - Perkins Models,* for instructions on how to prime the fuel filter/water separator.

https://truckmanualshub.com/

TABLE A PROCEDURES

5 Clean up any fuel that may have spilled.

6 Start the engine from the ground controls and check the fuel filter/water separator and vent plug for leaks.

DANGER Explosion and fire hazard. If a fuel leak is discovered, keep any additional personnel from entering the area and do not operate the machine. Repair the leak immediately.

Deutz Models:

1 Open the engine side cover and locate the fuel filter/water separator.

2 Loosen the drain plug located at the bottom of the filter. Allow the water to drain into a suitable container until fuel starts to come out. Immediately tighten the drain plug.

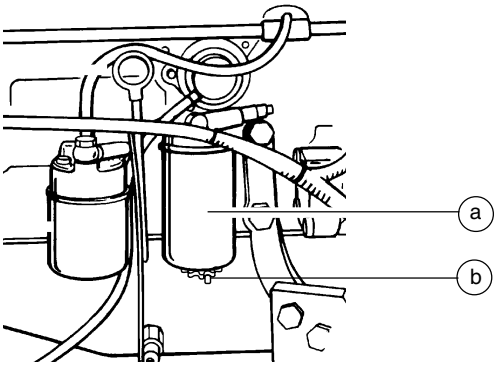

a fuel filter
b drain plug

3 Clean up any fuel that may have spilled.

NOTICE If the fuel filter is completely drained, you must prime the fuel filter/water separator before starting the engine. Refer to D-9 in this section, *Replace The Fuel Filter/Water Separator - Deutz Diesel Models,* for instructions on how to prime the fuel filter/water separator.

4 Start the engine from the ground controls and check the fuel filter/water separator for leaks.

DANGER Explosion and fire hazard. If a fuel leak is discovered, keep any additional personnel from entering the area and do not operate the machine. Repair the leak immediately.

https://truckmanualshub.com/

TABLE A PROCEDURES

A-16
Inspect the Engine Air Filter

Maintaining the engine air filter in good condition is essential to good engine performance and service life. Failure to perform this procedure can lead to poor engine performance and component damage.

NOTICE Perform this procedure with the engine off.

Ford and Deutz Models:

1 Open the engine side cover and remove the retaining ring from the end cap of the air filter canister.

2 Remove the end cap from the air cleaner canister.

3 Remove the air filter retaining fastener. Remove the filter element.

4 Clean the inside of the canister and the gasket with a damp cloth.

5 Inspect the filter element. If needed, blow out from inside out using low pressure dry compressed air, or tap dust out taking care not to damage the element.

6 Install the air filter element and install the mounting fastener.

7 Install the end cap onto the canister. Install and tighten the retaining ring.

Perkins models:

1 Open the engine side cover and disconnect the retaining fasteners from the end cap of the air filter canister. Remove the end cap.

2 Remove the filter element.

3 Empty dust discharge valve by pressing together the sides of the discharge slot. Clean discharge slot as needed.

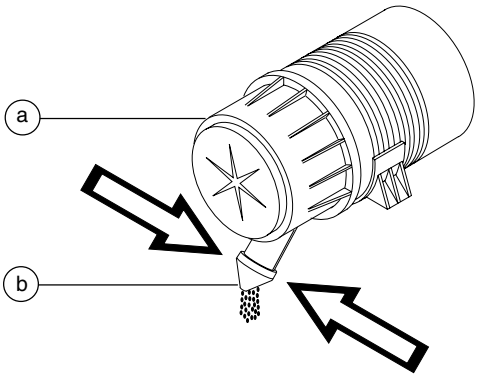

Perkins diesel models
a air filter
b dust discharge valve

4 Clean the inside of the canister and the canister end cap with a damp cloth.

5 Inspect the filter element. If needed, blow out from inside out using low pressure dry compressed air, or tap out dust taking care not to damage the element.

6 Install the filter element

7 Install the end cap onto the canister. Secure the retaining fasteners.

Air filters - Genie part numbers	
Ford LRG-425 EFI Engine	27916
Deutz F4L 1011F Engine	27916
Perkins 704-30 Engine	62420

https://truckmanualshub.com/

TABLE A PROCEDURES

A-17
Perform 30 Day Service

The 30 day maintenance procedure is a one time sequence of procedures to be performed after the first 30 days or 50 hours of usage. After this interval, refer to the maintenance tables for continued scheduled maintenance.

1 Perform the following maintenance procedures:

- A-20 Replace the Engine Oil and Filter - Ford Models (if applicable) OR
- C-5 Replace the Engine Oil and Filter - Perkins Models (if applicable) OR
- D-9 Replace the Engine Oil Filter - Deutz Models (if applicable)
- B-3 Inspect the Tires and Wheels (including lug nut torque)
- B-21 Replace the Hydraulic Tank Return Filter
- D-4 Check the Turnable Rotation Bearing Bolts

A-18
Inspect the Radiator - Liquid Cooled Models

NOTICE Engine specifications require that this procedure be performed every 100 hours. Perform this procedure more often if dusty conditions exist.

Maintaining the radiator in good condition is essential for good engine performance. Operating a machine with a damaged or leaking radiator may result in engine damage. Also, restricting air flow through the radiator (i.e., dirt or debris) will affect the performance of the cooling system. A frequent check allows the inspector to identify changes in the condition of the radiator that might indicate cooling system problems.

WARNING Bodily injury hazard. Do not inspect while the engine is running. Remove the key to secure from operation.

CAUTION Bodily injury hazard. Beware of hot engine parts and coolant. Contact with hot engine parts and/or coolant may cause severe burns.

https://truckmanualshub.com/

1 Remove the 2 engine pivot plate retaining bolts. Swing the engine pivot plate away from the machine to access the radiator.

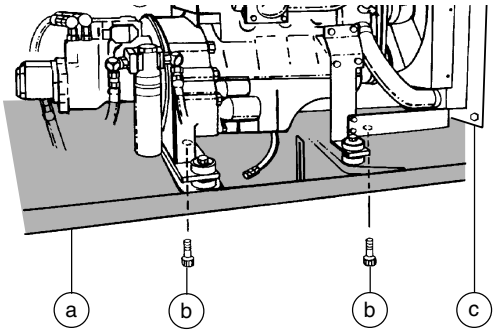

a engine pivot plate
b pivot plate retaining bolts
c air baffle

2 Inspect the radiator for leaks and physical damage.

3 Clean the radiator fins of debris and foreign materials.

4 Inspect all radiator hoses and connections.

5 Swing the engine pivot plate back to its original position and install the two engine pivot plate retaining bolts.

A-19
Check the Battery

NOTICE Genie specifications require that this procedure be performed every 100 hours.

Proper battery condition is essential to good engine performance and operational safety. Improper fluid levels or damaged cables and connections can result in engine component damage and hazardous conditions.

⚠WARNING Electrocution hazard. Contact with hot or live circuits could result in death or serious injury. Remove all rings, watches and other jewelry.

⚠WARNING Bodily injury hazard. Batteries contain acid. Avoid spilling or contacting battery acid. Neutralize battery acid spills with baking soda and water.

1 Put on protective clothing and eye wear.

2 Be sure that the battery cable connections are free of corrosion.

3 Be sure that the battery hold downs and cable connections are tight.

https://truckmanualshub.com/

TABLE A PROCEDURES

4 Remove the battery vent caps and check the specific gravity of each battery cell with a hydrometer.

⊙ Result: If any battery cell displays a specific gravity of less than 1.026, the battery must be replaced.

5 Check the battery acid level of each cell. If needed, replenish with distilled water to the bottom of each battery fill tube. Do not overfill.

6 Install the battery vent caps.

NOTICE Applying a corrosion preventative sealant will help eliminate corrosion on the battery terminals and cables.

A-20
Replace the Engine Oil and Filter - Ford Models

NOTICE Ford engine specifications require that this procedure be performed every 100 hours. Perform this procedure more often if dusty conditions exist or the machine is subjected to extended low idle operation.

Periodic replacement of the engine oil and filter is essential to good engine performance. Operating the machine with an improper oil level or neglecting periodic oil and filter changes can damage engine components. A daily check of machine hours against the hours noted on the oil filter will allow the inspector to anticipate and perform oil and filter changes at the 100 hour interval.

⚠CAUTION Bodily injury hazard. Beware of hot engine parts and oil. Contact with hot engine oil and/or engine parts may cause severe burns.

NOTICE Perform this procedure after warming the engine to normal operating temperature.

1 Open the engine side turntable cover and remove the oil filler cap located on the valve cover.

https://truckmanualshub.com/

TABLE A PROCEDURES

2 Pull the oil drain hose out from underneath the engine.

3 Open the engine oil drain valve on the engine oil pan and allow all of the oil from the engine to drain into a suitable container. See specifications.

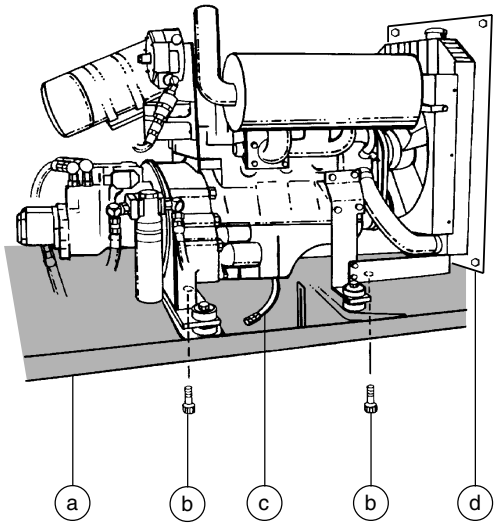

a engine pivot plate
b pivot plate retaining bolts
c oil drain hose
d air baffle

4 Close the engine oil drain valve.

5 Remove the 2 engine pivot plate retaining bolts. Pull the engine pivot plate away from the machine to access the oil filter.

6 Place a container under the oil filter.

7 Use an oil filter wrench and remove the filter.

8 Apply a thin layer of fresh oil on the gasket of the new oil filter. Install the filter and tighten it securely by hand.

9 Use a permanent ink marker to write the date and number of hours from the hour meter on the oil filter.

10 Fill the engine with new oil per specifications and install the filler cap. See capacity specifications.

11 Start the engine from the ground controls. Allow the engine to run for 30 seconds, then turn the engine off.

12 Check the oil filter, oil pan drain hose and drain valve for leaks.

13 Swing the engine pivot plate back to its original position and install the two engine pivot plate retaining bolts.

14 Check the engine oil level dipstick. Add oil if needed.

15 Clean up any oil that may have spilled. Properly dispose of the oil and filter.

Ford LRG-425 EFI Engine	4.5 quarts
Oil capacity (including filter)	4.3 liters
Oil viscosity requirements	
below 60°F / 15.5°C	5W-30
-10° to 90°F / -23° to 32°C	5W-30
above -10°F / -23°C	5W-30
above 25°F / -4°C	10W-30
Use oils meeting API classification SH or SG grade.	
Oil filter - Genie part number	28656

https://truckmanualshub.com/

TABLE A PROCEDURES

A-21
Inspect the Electrical Wiring

NOTICE Genie specifications require that this procedure be performed every 100 hours.

Maintaining electrical wiring in good condition is essential to safe operation and good machine performance. Failure to find and replace burnt, chafed, corroded or pinched wires could result in unsafe operating conditions and may cause component damage.

⚠WARNING Electrocution hazard. Contact with hot or live circuits could result in death or serious injury. Remove all rings, watches and other jewelry.

1 Open the engine side turntable cover.

2 Remove the 2 engine pivot plate retaining bolts and swing the engine out away from the machine to access the wiring.

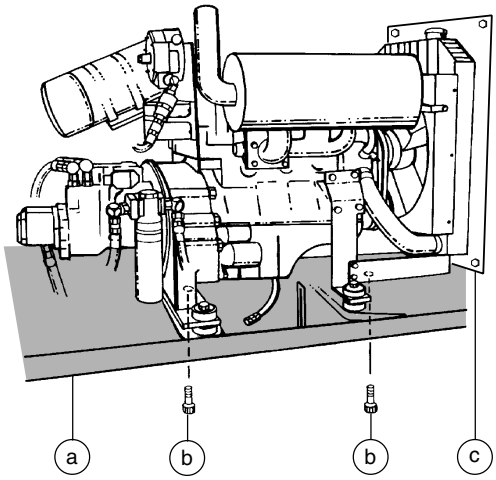

a engine pivot plate
b pivot plate retaining bolts
c air baffle

3 Inspect the following areas for burnt, chafed, corroded and loose wires:

- Engine wiring harness
- Hydraulic manifold wiring

4 Open the ground controls side turntable cover.

5 Inspect the following areas for burnt, chafed, corroded and loose wires:

- Inside of the ground control box
- Hydraulic manifold wiring

6 Start the engine from the ground controls and raise the boom above the turntable covers.

7 Remove the center turntable cover fasteners. Remove the cover.

8 Inspect the turntable area for burnt, chafed and pinched cables.

9 Install the center turntable cover and fasteners.

10 Lower the boom to the stowed position and turn the engine off.

11 Inspect the following areas for burnt, chafed, corroded, pinched and loose wires:

- Cable track on the primary boom
- Cables on the primary, and jib booms
- Jib boom/platform rotate manifold (S-85 models)
- Inside of the platform control box

12 Swing the engine pivot plate back to its original position and install the two engine pivot plate retaining bolts.

https://truckmanualshub.com/

A-22
Check the Oil Cooler and Cooling Fins - Deutz Models

NOTICE Engine specifications require that this procedure be performed every 125 hours.

Maintaining the oil cooler in good condition is essential for good engine performance. Operating a machine with a damaged oil cooler may result in engine damage. Also, restricting air flow through the oil cooler will affect the performance of the cooling system.

⚠WARNING Bodily injury hazard. Do not inspect while the engine is running. Remove the key to secure from operation.

⚠CAUTION Bodily injury hazard. Beware of hot engine components. Contact with hot engine components may cause severe burns.

Oil Cooler

1 Remove the engine side cover mounting fasteners. Remove the engine side cover.

2 Inspect the oil cooler for leaks and physical damage.

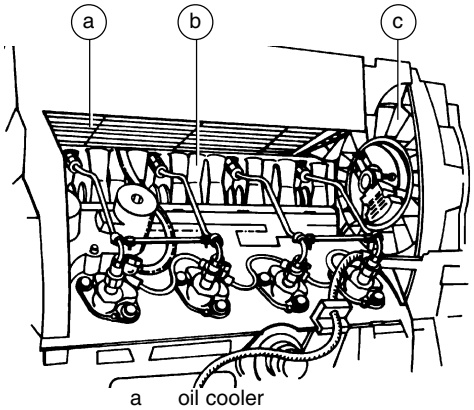

a oil cooler
b cylinder head cooling fins
c fan blower fins

3 Clean the oil cooler of debris and foreign material.

https://truckmanualshub.com/

TABLE A PROCEDURES

Cooling and Fan Blower Fins

4 Remove the 2 bolts from under the engine pivot plate. Swing the engine pivot plate away from the machine to access the fan blower.

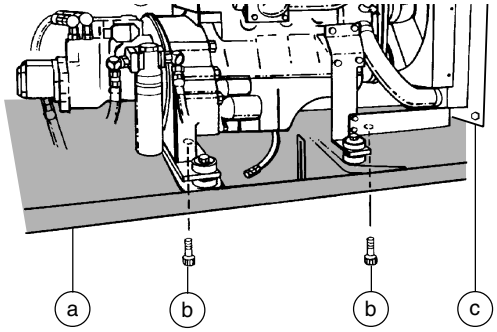

a engine pivot plate
b pivot plate retaining bolts
c air baffle

5 Inspect the fan blower fins for physical damage.

6 Clean the fan blower fins of debris and foreign material.

7 Inspect the head cooling passages and fins for physical damage or foreign material, using a flashlight.

8 Clean the cylinder head cooling passages and fins of debris and foreign material.

9 Install the engine side cover.

10 Swing the engine pivot plate back to its original position and install the two engine pivot plate retaining bolts.

A-23
Check the Engine Belt - Ford and Perkins Models

NOTICE Engine specifications require that this procedure be performed every 200 hours.

Maintaining the engine belt is essential to good engine performance and service life. The machine will not operate properly with a loose or defective belt and continued use may cause component damage.

⚠WARNING Bodily injury hazard. Do not inspect while the engine is running. Remove the key to secure from operation.

⚠CAUTION Bodily injury hazard. Beware of hot engine components. Contact with hot engine components may cause severe burns.

https://truckmanualshub.com/

TABLE A PROCEDURES

1 Remove the 2 engine pivot plate retaining bolts. Swing the engine pivot plate away from the machine to access the front engine access cover mounting fasteners.

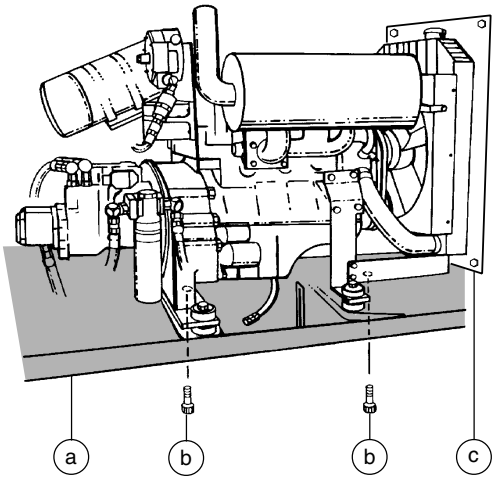

a engine pivot plate
b pivot plate retaining bolts
c air baffle

2 Inspect the engine belt for:

· Cracking

· Glazing

· Separation

· Breaks

3 Replace belt if any damage is found.

NOTICE Ford LRG-425 EFI engines are equipped with a serpentine belt and incorporate a self adjusting belt tensioner. No adjustment is required.

Perkins models:

4 Check the engine belt for proper tension.

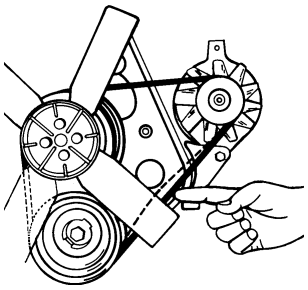

Perkins Diesel engine

5 Swing the engine pivot plate back to its original position and install the two engine pivot plate retaining bolts.

Belt deflection - Perkins models	3/8 inch to 1/2 inch 9 mm to 12 mm

Engine belts - Genie part numbers	
Ford models	52580
Perkins models	62423

https://truckmanualshub.com/

TABLE A PROCEDURES

A-24
Replace the Fuel Filters - Ford Models

NOTICE Engine specifications require that this procedure be performed every 200 hours.

Replacing the gasoline fuel filter is essential to good engine performance and service life. A dirty or clogged filter may cause the engine to perform poorly and continued use may cause component damage. Extremely dirty conditions may require that the filter be replaced more often.

DANGER Explosion and fire hazard. Engine fuels are combustible. Replace the fuel filter in an open, well-ventilated area away from heaters, sparks, flames and lighted tobacco. Always have an approved fire extinguisher within easy reach.

NOTICE Perform this procedure with the engine off.

1 Locate the fuel pre-filter to the left of the ground control box.

2 Turn the manual shutoff valve, located at the fuel tank, to the CLOSED position.

3 At the pre-filter, disconnect the fuel hose that goes to the fuel tank.

4 Disconnect and plug the fuel hose from the fuel pre-filter to the fuel pump, then remove the pre-filter.

5 Install the new fuel pre-filter (Genie part number 52179) and connect the fuel hoses to the filter.

6 Clean up any fuel that may have spilled during the installation procedure.

7 Remove the 2 engine pivot plate retaining bolts. Swing the engine pivot plate away from the machine to access the fuel pressure regulator/filter.

8 Locate the fuel pressure regulator/filter installed on the engine mounting leg.

9 Disconnect and plug the hoses from the fuel pressure regulator/filter.

DANGER Explosion and fire hazard. Electronic Fuel Injection (EFI) systems operate at a very high pressure. Fuel may be expelled under pressure if the hoses are removed too quickly. Loosen the fuel hoses very slowly to allow the fuel pressure to dissipate gradually. Wrap a cloth around fuel hoses to absorb leaking fuel before disconnecting them.

10 Remove the fuel pressure regulator/filter mounting fasteners. Then remove the regulator/filter from the engine mounting leg.

https://truckmanualshub.com/

TABLE A PROCEDURES

11 Install the new fuel pressure regulator/filter (Genie part number 58967) onto the engine mounting leg and connect the hoses to the regulator/filter.

CAUTION Component damage hazard. Be sure the correct regulator/filter is installed or component damage may occur.

12 Turn the manual shutoff valve, located at the fuel tank, to the OPEN position.

13 Start the machine from the ground controls, then inspect the fuel filters and hoses for leaks.

⚠ DANGER Explosion and fire hazard. If a fuel leak is discovered, keep any additional personnel from entering the area and do not operate the machine. Repair the leak immediately.

14 Swing the engine pivot plate back to its original position and install the two engine pivot plate retaining bolts.

https://truckmanualshub.com/

Table B Procedures

B-1
Check the Exhaust System

Maintaining the exhaust system is essential to good engine performance and service life. Running the engine with a damaged or leaking exhaust system can cause component damage and unsafe operating conditions.

WARNING Bodily injury hazard. Do not inspect while the engine is running. Remove the key to secure from operation.

CAUTION Bodily injury hazard. Beware of hot engine components. Contact with hot engine components may cause severe burns.

1 **Diesel models:** Remove the 2 bolts from under the engine pivot plate. Swing the engine pivot plate away from the machine to access the exhaust system.

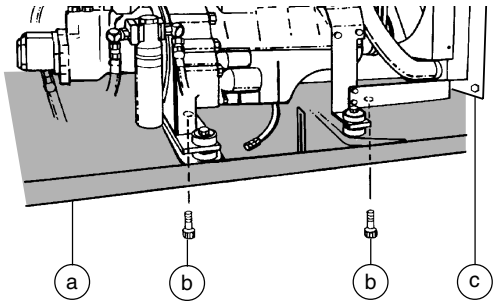

a engine pivot plate
b pivot plate retaining bolts
c air baffle

2 **All models:** Be sure that all nuts and bolts are tight.

3 Inspect all welds for cracks.

4 Inspect for exhaust leaks; i.e., carbon buildup around seams and joints.

5 **Diesel models:** Swing the engine pivot plate back to its original position and install the two engine pivot plate retaining bolts.

https://truckmanualshub.com/

B-2
Check the Hydraulic Tank Return Filter Condition Indicator

Maintaining the hydraulic tank return filter in good condition is essential to good system performance and safe machine operation. The filter condition indicator will show when the hydraulic flow is bypassing a clogged filter. If the filter is not frequently checked and replaced, impurities will remain in the hydraulic system and cause component damage.

NOTICE Perform this procedure with the engine running.

1 Start the engine from the platform controls.

2 Move the engine idle speed select switch to high idle (rabbit symbol).

3 Inspect the filter condition indicator.

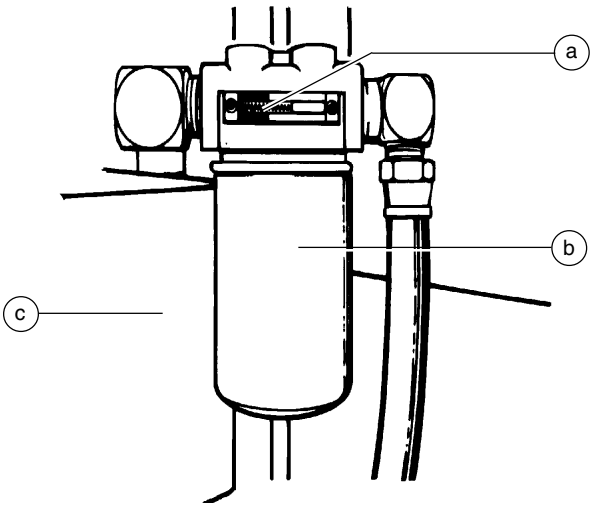

a filter condition indicator
b filter
c hydraulic tank

⊙ Result: The filter should be operating with the plunger in the green area. If the display shows the plunger in the red area, this indicates that the hydraulic filter is being bypassed and the filter should be replaced. See B-21, *Replace the Hydraulic Tank Return Filter.*

https://truckmanualshub.com/

TABLE B PROCEDURES

B-3
Inspect the Tires and Wheels (including lug nut torque)

Maintaining the tires and wheels in good condition is essential to safe operation and good performance. Tire and/or wheel failure could result in a machine tip-over. Component damage may also result if problems are not discovered and repaired in a timely fashion.

WARNING Bodily injury hazard. An over-inflated tire can explode and could result in death or serious injury.

WARNING Tip-over hazard. Do not use temporary flat tire repair products.

NOTICE The tires on some machines are foam filled and do not need air added to them.

1 Check all tire treads and sidewalls for cuts, cracks, punctures and unusual wear.

2 Check each wheel for damage, bends and cracked welds.

3 Check each lug nut for proper torque.

4 Check the pressure in each air-filled tire. Add air as necessary.

Tires and wheels	
Tire size	15-19.5 NHS
Pressure	100 psi 6.9 bar
Tire ply rating	12
Wheel lugs	10 @ 3/4 -16
Lug nut torque, dry	420 ft-lbs 569.5 Nm
Lug nut torque, lubricated	320 ft-lbs 433.9 Nm

https://truckmanualshub.com/

TABLE B PROCEDURES

B-4
Confirm the Proper Brake Configuration

Proper brake configuration is essential to safe operation and good machine performance. Hydrostatic brakes and hydraulically-released, spring-applied individual wheel brakes can appear to operate normally when they are actually not fully operational.

1 Check each drive hub disconnect cap to be sure it is in the engaged position.

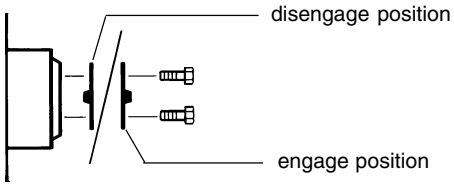

2 Be sure the free-wheel valve is closed (clockwise).

NOTICE The free-wheel valve is located on the drive pump.

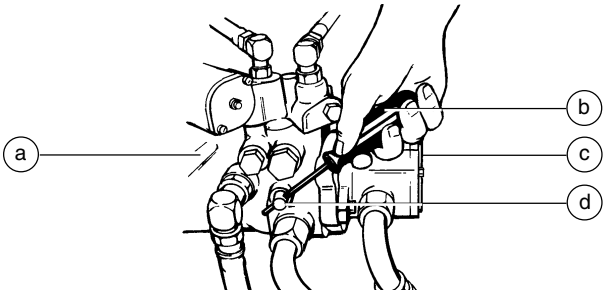

a drive pump
b screwdriver
c lift pump
d free-wheel valve

NOTICE The free-wheel valve should always remain closed.

https://truckmanualshub.com/

TABLE B PROCEDURES

B-5
Check the Oil Level in the Drive Hubs

Failure to maintain proper drive hub oil levels may cause the machine to perform poorly and continued use may cause component damage.

Drive Hubs

1 Drive the machine to rotate the hub until the plugs are located one on top and the other at 90 degrees.

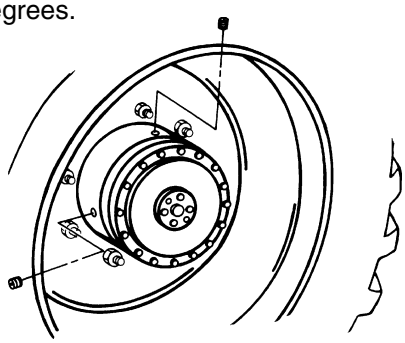

2 Remove the plug located at 90 degrees and check the oil level.

⊙ Result: The oil level should be even with the bottom of the plug hole.

3 If necessary, remove the top plug and add oil until the oil level is even with the bottom of the side plug hole.

4 Apply pipe thread sealant to the plug(s), and then install the plug(s) in the drive hub.

5 Repeat this procedure for each drive hub.

Drive hub oil	
Capacity	44 fl oz 1.30 liters

Type: SAE 90 multipurpose hypoid gear oil - API service classification GL5

Turntable Rotate Drive Hub

1 Remove the plug located on the side of the hub and check the oil level.

⊙ Result: The oil level should be even with the bottom of the plug hole.

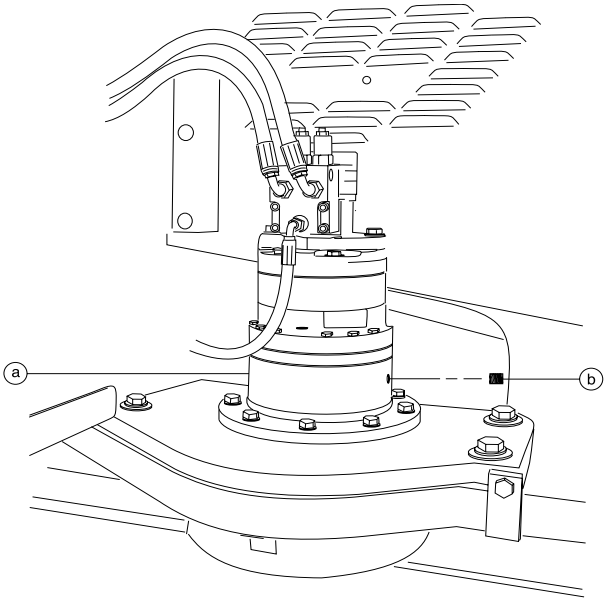

a drive hub
b plug

https://truckmanualshub.com/

TABLE B PROCEDURES

2 If necessary, add oil until the oil level is even with the bottom of the side plug hole.

3 Apply pipe thread sealant to the plug, and install the plug in the drive hub.

Turntable rotate drive hub oil	
Capacity	17 fluid ounces 0.51 liters
Type SAE 90 multipurpose hypoid gear oil - API service classification GL5	

https://truckmanualshub.com/

TABLE B PROCEDURES

B-6
Check and Adjust the Engine RPM

Maintaining the engine rpm at the proper setting for both low and high idle is essential to good engine performance and service life. The machine will not operate properly if the rpm is incorrect and continued use may cause component damage.

Ford Models:

NOTICE The engine rpm is controlled by the ECM and can only be adjusted by re-programming the ECM. If rpm adjustment or service is required, please contact the Genie Industries Service Department OR your local Ford dealer.

Ford models	
Low idle	1600 rpm
High idle	2500 rpm

Diesel models:

NOTICE This procedure will require two people.

1 Connect a tachometer to the engine. Start the engine from the platform controls.

⊙ Result: Low idle should be 1500 rpm for Deutz models, 1600 rpm for Perkins models.

Skip to step 4 if the low idle rpm is correct.

2 Loosen the low idle lock nut and turn the low idle adjustment screw clockwise to increase the rpm, or counterclockwise to decrease the rpm. Tighten the low idle lock nut and confirm the rpm.

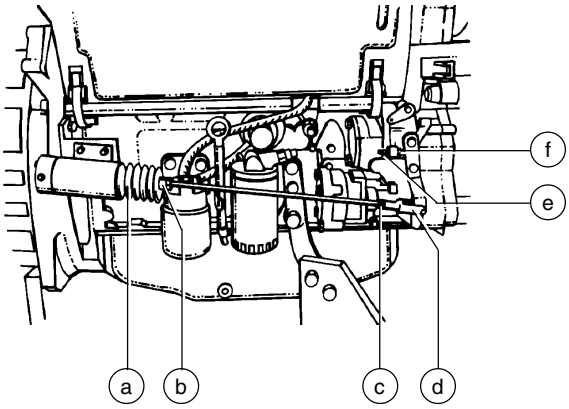

a solenoid boot
b high idle adjustment nut
c yoke lock nut
d yoke
e low idle adjustment screw
f low idle lock nut

3 Move the function enablerpm select toggle switch to the high idle (rabbit symbol) position.

⊙ Result: High idle should be 2300 rpm for Deutz models, 2200 rpm for Perkins models.

If high idle rpm is correct, disregard adjustment step 4.

https://truckmanualshub.com/

4 Loosen the yoke lock nut, then turn the high idle adjustment nut and solenoid boot counterclockwise to increase the rpm or clockwise to decrease the rpm. Tighten the yoke lock nut and recheck the rpm.

NOTICE Be sure the solenoid fully retracts when activating high idle.

Deutz models	
Low idle	1500 rpm
High idle	2300 rpm
Perkins models	
Low idle	1600 rpm
High idle	2200 rpm

B-7
Test the Key Switch

Proper key switch action and response is essential to safe machine operation. The machine can be operated from the ground or platform controls and the activation of one or the other is accomplished with the key switch. Failure of the key switch to activate the appropriate control panel could cause a hazardous operating situation.

1 Pull out the Emergency Stop button to the ON position at both the ground and platform controls.

2 Turn the key switch to ground control, start the engine and then turn the key switch to **platform control**.

3 Check any machine function from the **ground controls**.

⊙ Result: The machine functions should **not** operate.

4 Turn the key switch to ground control.

5 Check any machine function from the **platform controls**.

⊙ Result: The machine functions should **not** operate.

6 Turn the key switch to the OFF position.

⊙ Result: The engine should stop and no functions should operate.

NOTICE Diesel models: All functions should stop immediately. The engine will shut off after 2 to 3 seconds.

https://truckmanualshub.com/

TABLE B PROCEDURES

B-8
Test the Emergency Stop Buttons

Properly functioning Emergency Stop buttons are essential for safe machine operation. An improperly operating Emergency Stop button will fail to shut off power and stop all machine functions, resulting in a hazardous situation for ground and platform personnel.

NOTICE As a safety feature, selecting and operating the ground controls will override the platform controls, including the platform Emergency Stop button.

1 Start the engine from ground controls.

2 Push in the Emergency Stop button to the OFF position.

⊙ Result: The engine should shut off and no machine functions should operate.

NOTICE **Diesel models:** All functions should stop immediately. The engine will shut off after 2 to 3 seconds.

3 Start the engine from platform controls.

4 Push in the Emergency Stop button to the OFF position.

⊙ Result: The engine should shut off and no machine functions should operate.

NOTICE The ground control Emergency Stop button will stop all machine operation, even if the key switch is switched to platform control.

B-9
Test the Ground Control Override

A properly functioning ground control override is essential to safe machine operation. The ground control override function is intended to allow ground personnel to operate the machine from the ground controls whether or not the Emergency Stop button on the platform controls is in the ON or OFF position. This function is particularly useful if the operator at the platform controls cannot return the boom to the stowed position.

1 Push in the platform Emergency Stop button to the OFF position.

2 Start the engine from the ground controls.

3 At the ground controls, operate each boom function through a partial cycle.

⊙ Result: All boom functions should operate.

https://truckmanualshub.com/

TABLE B PROCEDURES

B-10
Test the Platform Self-leveling

Automatic platform self-leveling throughout the full cycle of boom raising and lowering is essential for safe machine operation. The platform is maintained at level by the platform leveling slave cylinder which operates in a closed loop hydraulic circuit with the master cylinder located at the base of the boom.
A platform self-leveling failure creates an unsafe working condition for platform and ground personnel.

1 Start the engine from the ground controls and lower the boom to the stowed position.

2 Hold the function enable toggle switch to either side and adjust the platform to a level position using the platform level toggle switch.

3 Raise and lower the boom through a full cycle.

⊙ Result: The platform should remain level at all times to within ±5 degrees.

B-11
Test the Horn

A functional horn is essential to safe machine operation. The horn is activated at the platform controls and sounds at the ground as a warning to ground personnel. An improperly functioning horn will prevent the operator from alerting ground personnel of hazards or unsafe conditions.

1 Turn the key switch to platform controls and pull out the Emergency Stop button to the ON position at both the ground and platform controls.

2 Push down the horn button at the platform controls.

⊙ Result: The horn should sound.

NOTICE If necessary, the horn can be adjusted to obtain the loudest volume by turning the adjustment screw near the wire terminals on the horn.

https://truckmanualshub.com/

TABLE B PROCEDURES

B-12
Test the Foot Switch

A properly functioning foot switch is essential to safe machine operation. Machine functions should activate and operate smoothly as long as the foot switch is pressed down, and promptly stop when the foot switch is released. The foot switch will also shift the engine into high idle if the idle select is switched to the rabbit and foot switch symbol. An improperly functioning foot switch can cause an unsafe working condition and endanger platform and ground personnel.

NOTICE The engine should not start if the foot switch is pressed down.

1 Turn the key switch to platform controls and pull out the Emergency Stop button to the ON position at both the ground and platform controls.

2 Press down the foot switch and attempt to start the engine by moving the start toggle switch to either side.

⊙ Result: The engine should **not** start.

3 Do not press down the foot switch and attempt to start the engine.

⊙ Result: The engine should start.

4 Do not press down the foot switch and operate the machine functions.

⊙ Result: The machine functions should **not** operate.

5 Press down the foot switch and operate the machine functions.

⊙ Result: The machine functions should operate.

B-13
Test the Engine Idle Select Operation

A properly operating engine idle select switch is essential to good engine performance and safe machine operation. There are three settings.

Low idle (turtle symbol) allows the operator to control individual boom functions only. Drive functions do not operate at low idle.

High idle (rabbit symbol) allows the operator to control multiple boom and/or drive functions simultaneously. This setting maintains a consistent high idle and is usually selected only when the generator option is being used.

Foot switch activated high idle (rabbit and foot switch symbols) should be used for normal machine operation. This setting activates high idle only when the foot switch is pressed down.

1 Pull out the Emergency Stop button to the ON position at both the ground and platform controls.

2 Start the engine from the ground controls. Move and hold the function enable toggle switch in the high idle (rabbit symbol) position.

⊙ Result: The engine rpm should change to high idle.

3 Release the function enable toggle switch.

⊙ Result: The engine rpm should change to low idle.

https://truckmanualshub.com/

4 Turn the key switch to platform controls.

5 At the platform controls, move the engine idle select toggle switch to high idle (rabbit symbol). Do not press down the foot switch.

⊙ Result: The engine rpm should change to high idle.

6 Move the engine idle select switch to low idle (turtle symbol).

⊙ Result: The engine rpm should change to low idle.

7 Move the engine idle select switch to foot switch activated high idle (rabbit and foot switch symbol).

⊙ Result: The engine rpm should **not** change to high idle.

8 Press down the foot switch.

⊙ Result: The engine rpm should change to high idle.

B-14
Test the Fuel Select Operation - Ford Models

The ability to select and switch between gasoline and LPG fuels as needed is essential to safe machine operation. A fuel selection can be made while the engine is running or not. Switching malfunctions and/or the failure of the engine to start and run properly in both fuel modes and through all idle speeds can indicate fuel system problems that could develop into a hazardous situation.

NOTICE Perform this test after checking the gasoline and LPG fuel levels, and warming the engine to normal operating temperature.

1 Move the fuel select toggle switch to gasoline and then move the engine idle select switch to foot switch activated high idle (rabbit and foot switch symbol).

2 Start the engine from the platform controls and allow it to run at low idle.

3 Press down the foot switch to allow the engine to run at high idle.

⊙ Result: The engine should start promptly and operate smoothly in low and high idle.

4 Release the foot switch and shut the engine off by pushing the Emergency Stop button in to the OFF position.

https://truckmanualshub.com/

TABLE B PROCEDURES

5 Move the fuel select switch to LPG.

6 Start the engine and allow it to run at low idle.

7 Press down the foot switch to allow the engine to run at high idle.

⊙ Result: The engine should start promptly and operate smoothly in low and high idle.

NOTICE The engine may hesitate momentarily and then continue to run on the selected fuel if the fuel source is switched while the engine is running.

B-15
Test the Drive Enable System

Proper drive enable system operation is essential to safe machine operation. When the boom is past the non-steering wheels, drive movement is stopped and the indicator light turns on. The drive enable switch must be held to either side to reactivate the drive function and should alert the operator that the machine will move in the opposite direction that the drive and steer controls are moved. An improperly functioning drive enable system may allow the machine to be moved into an unsafe position.

1 Start the engine from the platform controls.

2 Move the lift/drive selector toggle switch to the lift position (if equipped).

3 Press down the foot switch.

4 Rotate the turntable to the right until the boom moves past the right non-steering wheel.

⊙ Result: The drive enable indicator light should turn on and remain on while the boom is anywhere in the range shown.

5 Move the lift/drive select toggle switch to the drive position (if equipped).

6 Slowly move the drive control handle off center.

⊙ Result: The drive function should **not** operate.

https://truckmanualshub.com/

7 Hold the drive enable toggle switch to either side and slowly move the drive control handle off center.

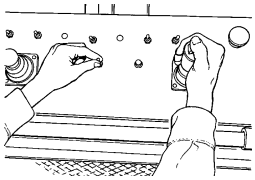

WARNING Collision hazard. Always use the color-coded direction arrows on the platform control panel and the drive chassis to identify which direction the machine will travel.

⊙ Result: The drive function should operate.

8 Rotate the turntable to the left until the boom moves past the left non-steering wheel.

⊙ Result: The drive enable indicator light should come on and remain on while the boom is anywhere in the range shown.

9 Repeat steps 6 and 7.

B-16
Test the Drive Brakes

Proper brake action is essential to safe machine operation. The drive brake function should operate smoothly, free of hesitation, jerking and unusual noise. Hydrostatic brakes and hydraulically-released individual wheel brakes can appear to operate normally when they are actually not fully operational.

WARNING Collision hazard. Be sure that the machine is not in free-wheel or partial free-wheel configuration. Refer to B-4 in this section, *Confirm the Proper Brake Configuration*.

NOTICE Select a test area that is firm, level and free of obstructions.

NOTICE Be sure the boom is fully retracted and lowered to the stowed position.

1 Mark a test line on the ground for reference.

2 Start the engine from the platform controls.

3 Move the lift/drive select switch to the drive position (if equipped).

4 Choose a point on the machine; i.e., contact patch of a tire, as a visual reference for use when crossing the test line.

https://truckmanualshub.com/

TABLE B PROCEDURES

5 Bring the machine to top drive speed before reaching the test line. Release the drive controller when your reference point on the machine crosses the test line.

6 Measure the distance between the test line and your machine reference point.

Braking: high range, paved surface	3 to 5 ft 0.6 to 1.2 m

NOTICE The brakes must be able to hold the machine on any slope it is able to climb.

B-17
Test the Drive Speed - Stowed Position

Proper drive function movement is essential to safe machine operation. The drive function should respond quickly and smoothly to operator control. Drive performance should also be free of hesitation, jerking and unusual noise over the entire proportionally controlled speed range.

NOTICE Select a test area that is firm, level and free of obstructions.

NOTICE Be sure the boom is fully retracted and lowered to the stowed position.

1 Create start and finish lines by marking two lines on the ground 40 feet (12.2 m) apart.

2 Start the engine from the platform controls.

3 Move the lift/drive select switch to the drive position (if equipped).

4 Choose a point on the machine; i.e., contact patch of a tire, as a visual reference for use when crossing the start and finish lines.

https://truckmanualshub.com/

5 Bring the machine to top drive speed before reaching the start line. Begin timing when your reference point on the machine crosses the start line.

6 Continue at full speed and note the time when the machine reference point crosses the finish line.

Drive speed: stowed position	**2WD**	**4WD**
Ford models	40 ft/6.2 sec 12.2 m/6.2 sec	40 ft/9.1 sec 12.2 m/9.1 sec
Diesel models	40 ft/6.8 sec 12.2 m/6.8 sec	40 ft/9.7 sec 12.2 m/9.7 sec

B-18
Test the Drive Speed - Raised or Extended Position

Proper drive function movement is essential to safe machine operation. The drive function should respond quickly and smoothly to operator control. Drive performance should also be free of hesitation, jerking and unusual noise over the entire proportionally controlled speed range.

NOTICE Select a test area that is firm, level and free of obstructions.

1 Create start and finish lines by marking two lines on the ground 40 feet (12.2 m) apart.

2 Start the engine from the platform controls.

3 Move the lift/drive select switch to the lift position (if equipped).

4 Move the engine idle select switch to foot switch activated high idle (rabbit and foot switch). Press down the foot switch and raise the boom above horizontal.

5 Move the lift/drive select switch to the drive position (if equipped).

6 Choose a point on the machine; i.e., contact patch of a tire, as a visual reference for use when crossing the start and finish lines.

https://truckmanualshub.com/

TABLE B PROCEDURES

7 Bring the machine to top drive speed before reaching the start line. Begin timing when your reference point on the machine crosses the start line.

8 Continue at full speed and note the time when the machine reference point crosses the finish line.

9 Move the lift/drive select switch to the lift position (if equipped).

10 Press down the foot switch and lower the boom to the stowed position.

11 Extend the boom 3 feet (0.9 m).

12 Move the lift/drive select switch to the drive position (if equipped).

13 Choose a point on the machine; i.e., contact patch of a tire, as a visual reference for use when crossing the start and finish lines.

14 Bring the machine to top drive speed before reaching the start line. Begin timing when your reference point on the machine crosses the start line.

15 Continue at top speed and note the time when the machine reference point crosses the finish line.

Drive speed, maximum, raised or extended position	
All models	1 foot per second (0.6 mph) 0.3 meters per second (0.97 km/h)

B-19
Test the Alarm Package (if equipped)

The alarm package includes:

- Travel alarm
- Descent alarm
- Flashing beacons

Alarms and beacons are installed to alert operators and ground personnel of machine proximity and motion. The alarm package is installed on the turntable rear cover. Beacons are installed on both turntable covers.

NOTICE The alarms and beacons will operate with the engine running or not running.

1 Turn the key switch to ground controls and pull out the Emergency Stop button to the ON position at both the ground and platform controls.

⊙ Result: Both flashing beacons should be ON and flashing.

2 Hold the function enable switch to either side and activate the boom toggle switch in the DOWN position, hold for a moment and then release it.

⊙ Result: The descent alarm should sound when the toggle switch is held down.

3 Turn the key switch to platform controls.

⊙ Result: The flashing beacons should be ON and flashing.

https://truckmanualshub.com/

4 Move the lift/drive selector switch to the lift position (if equipped).

5 Press down the foot switch. Move the boom controller to the DOWN position, hold for a moment and then release it.

⊙ Result: The descent alarm should sound when the controller is held down.

6 Move the lift/drive selector switch to the drive position (if equipped).

7 Press down the foot switch. Move the drive controller off center, hold for a moment and then release it. Move the drive controller off center in the opposite direction, hold for a moment and then release it.

⊙ Result: The travel alarm should sound when the drive controller is moved off center in either direction.

B-20
Perform Hydraulic Oil Analysis

See E-1, *Test or Replace the Hydraulic Oil.*

B-21
Replace the Hydraulic Tank Return Filter

NOTICE Genie requires that this procedure be performed quarterly or every 250 hours, whichever comes first. Perform this procedure more often if dusty conditions exist.

Replacement of the hydraulic tank return filter is essential for good machine performance and service life. A dirty or clogged filter may cause the machine to perform poorly and continued use may cause component damage. Extremely dirty conditions may require that the filter be replaced more often.

⚠CAUTION Bodily injury hazard. Beware of hot oil. Contact with hot oil may cause severe burns.

NOTICE Perform this procedure with the engine off.

1 Place a suitable container under the hydraulic tank return filter.

2 Remove the filter with an oil filter wrench.

3 Apply a thin layer of fresh oil to the new oil filter gasket.

4 Install the new filter and tighten it securely by hand. Clean up any oil that may have spilled during the installation procedure.

https://truckmanualshub.com/

TABLE B PROCEDURES

5 Use a permanent ink marker to write the date and number of hours from the hour meter on the oil filter.

6 Start the engine from the ground controls.

7 Inspect the filter and related components to be sure that there are no leaks.

Hydraulic tank return filter	
Genie part number	46014

B-22
Replace the Drive Loop Hydraulic Filter

Replacing the drive loop hydraulic filter is essential to good machine performance and service life. A dirty or clogged filter may cause the machine to perform poorly and continued use may cause component damage. Extremely dirty conditions may require that the filter be replaced more often.

CAUTION Bodily injury hazard. Beware of hot oil. Contact with hot oil may cause severe burns.

NOTICE Perform this procedure with the engine off.

1 Locate the drive loop hydraulic filter mounted on the engine near the pump.

2 Remove the filter housing by using a wrench on the nut provided on the bottom of the housing.

3 Remove the filter element from the housing.

4 Inspect the housing seal and replace it if necessary.

5 Install the new filter and hand tighten the housing onto the filter head.

6 Start the engine from the ground controls.

7 Inspect the filter assembly to be sure that there are no leaks.

8 Clean up any oil that may have spilled during the installation procedure.

Drive loop hydraulic filter	
Genie part number	20880

https://truckmanualshub.com/

B-23
Inspect the Fuel Tank Cap Venting System

NOTICE Genie requires that this procedure be performed quarterly or every 250 hours, whichever comes first. Perform this procedure more often if dusty conditions exist.

A free-breathing fuel tank cap is essential for good engine performance and service life. A dirty or clogged fuel tank cap may cause the engine to perform poorly and continued use may cause component damage. Extremely dirty conditions may require that the cap be inspected more often.

DANGER Explosion and fire hazard. Engine fuels are combustible. Perform this procedure in an open, well-ventilated area away from heaters, sparks, flames and lighted tobacco. Always have an approved fire extinguisher within easy reach.

NOTICE Perform this procedure with the engine off.

1 Remove the cap from the fuel tank.

2 Check for proper venting.

NOTICE When checking for positive fuel tank cap venting, air should pass freely through the cap.

⊙ Result: Air should pass through the fuel tank cap. Clean or replace the cap.

3 Using a mild solvent, carefully wash the cap venting system. Dry using low pressure compressed air.

4 Repeat step 2.

5 Install the fuel tank cap onto the fuel tank.

https://truckmanualshub.com/

TABLE B PROCEDURES

B-24
Replace the Engine Air Filter Element

NOTICE Engine specifications requires that this procedure be performed every 400 hours or annually, whichever comes first. Perform this procedure more often if dusty conditions exist.

Maintaining the engine air filter in good condition is essential to good engine performance and service life. Failure to perform this procedure can lead to poor engine performance and component damage.

NOTICE Perform this procedure with the engine off.

Ford and Deutz Models:

1 Open the engine side turntable cover and remove the retaining ring from the end cap of the air filter canister.

2 Remove the end cap from the air cleaner canister.

3 Remove the air filter retaining fastener. Remove the filter element.

4 Clean the inside of the canister and the gasket with a damp cloth.

5 Install the new air filter element and mounting fastener.

6 Install the end cap onto the canister. Install and tighten the retaining ring.

Perkins models:

1 Open the engine side turntable cover and disconnect the retaining fasteners from the end cap of the air filter canister. Remove the end cap.

2 Remove the filter element.

3 Empty the dust discharge valve by pressing apart the lips of the discharge valve. Clean discharge valve as needed.

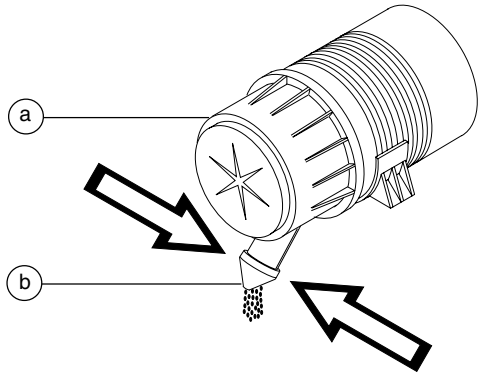

a air filter
b dust discharge valve

4 Clean the inside of the canister and the canister end cap with a damp cloth.

5 Install the new filter element.

6 Install the end cap onto the canister. Secure the retaining fasteners.

Air filters - Genie part numbers	
Ford LRG-425 EFI Engine	27916
Deutz F4L 1011F Engine	27916
Perkins 704-30 Engine	62420

https://truckmanualshub.com/

B-25
Replace the Spark Plugs - Ford Models

NOTICE Engine specifications requires that this procedure be performed every 400 hours.

Periodic replacement of the spark plugs is essential to good engine performance and service life. Worn, loose or corroded spark plugs will cause the engine to perform poorly and may result in component damage.

NOTICE Perform this procedure with the engine off.

1 Remove the 2 engine pivot plate retaining bolts. Swing the engine pivot plate away from the machine to access the spark plugs.

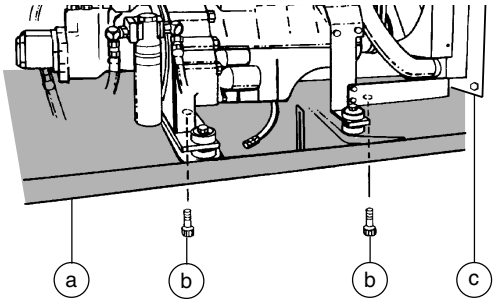

a engine pivot plate
b pivot plate retaining bolts
c air baffle

2 Label, then disconnect the plug wires from the spark plugs by grasping the handle on the spark plug boot. Do not pull on the plug wire.

3 Blow out any debris around spark plugs.

4 Remove all the spark plugs from the engine.

5 Adjust the gap on each new spark plug.

6 Install the new spark plugs, then connect the wires. Be sure that each spark plug wire is attached to the correct spark plug.

7 Swing the engine pivot plate back to its original position and install the two engine pivot plate retaining bolts.

Ford LRG-425 EFI Engine Spark plug specifications

Spark plug type	Motorcraft AWSF-52C
Spark plug gap	0.042 to 0.046 inches 1.07 to 1.18 mm
Spark plug torque	5-10 ft-lbs 7-14 Nm

https://truckmanualshub.com/

Table C Procedures

C-1
Check the Engine Belt - Deutz Models

Maintaining the engine belt is essential to good engine performance and service life. The machine will not operate properly with a loose or defective belt and continued use may cause component damage.

⚠WARNING Bodily injury hazard. Do not inspect while the engine is running. Remove the key to secure from operation.

⚠CAUTION Bodily injury hazard. Beware of hot engine components. Contact with hot engine components may cause severe burns.

1 Remove the 2 engine pivot plate retaining bolts. Swing the engine pivot plate away from the machine to access the engine belt.

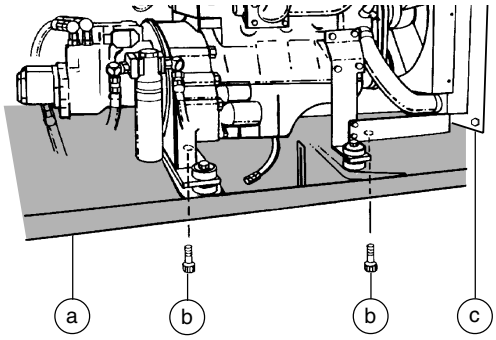

a engine pivot plate
b pivot plate retaining bolts
c air baffle

2 Remove the front engine access cover mounting fasteners.

3 Inspect the engine belt for:
- Cracking
- Glazing
- Separation
- Breaks

4 Replace belt if any damage is found.

5 Check the engine belt for proper tension. Adjust as necessary.

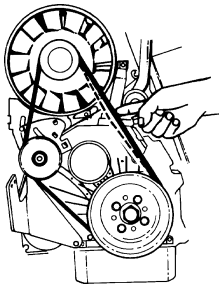

Deutz Diesel engine

6 Install the front engine access cover.

7 Swing the engine pivot plate back to its original position and install the two engine pivot plate retaining bolts.

Belt deflection - Deutz models	3/8 inch to 1/2 inch 9 mm to 12 mm
Engine belt - Genie part number	32698

https://truckmanualshub.com/

TABLE C PROCEDURES

C-2
Check the Engine Valve Clearances - Deutz Models

NOTICE Engine specifications require that this procedure be performed initially at 500 hours, at 1000 hours and every 1000 hours thereafter.

Complete information to perform this procedure is available in the *Deutz F4L 1011F Operation Manual*, Deutz part number 0297 7343 (Genie part number 52883).

C-3
Replace the Fuel Filter/ Water Separator Element - Perkins Models

Replacing the diesel fuel filter/water separator element is essential for good engine performance and service life. A dirty or clogged filter may cause the engine to perform poorly and continued use may cause component damage. Extremely dirty conditions may required that the filter be replaced more often.

DANGER Explosion and fire hazard. Engine fuels are combustible. Perform this procedure in an open, well-ventilated area away from heaters, sparks, flames and lighted tobacco. Always have an approved fire extinguisher within easy reach.

NOTICE Perform this procedure with the engine off.

NOTICE Immediately clean up any fuel that may have spilled during this procedure.

1 Open the engine side turntable cover and locate the fuel filter/water separator.

2 Tag, disconnect and plug the fuel hose from the fuel tank at the fuel filter/water separator head.

https://truckmanualshub.com/

TABLE C PROCEDURES

3 Loosen the vent plug located on the fuel filter/ water separator head.

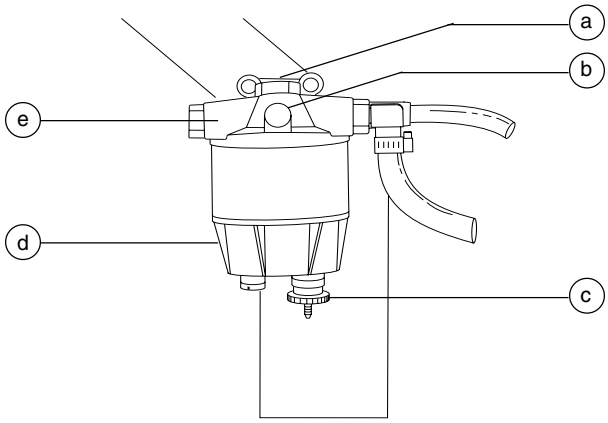

Fuel filter/water separator
a head bolt
b vent plug
c drain plug
d filter bowl
e separator head

4 Place a suitable container under the filter bowl. Loosen the drain plug located at the bottom of the bowl. Completely drain the fuel.

5 Loosen the head bolt. Rotate the filter bowl counterclockwise and remove it from the element.

6 Rotate the filter element counterclockwise and remove it from the filter head.

7 Install the bowl onto the new filter element (Genie part number 22942).

8 Apply a thin layer of clean diesel fuel onto the element gasket. Install the filter/bowl assembly onto the filter head. Tighten the drain plug.

9 Tighten the head bolt to 65 in-lbs (7 Nm).

10 Tighten the vent plug.

11 Clean up any diesel fuel that may have spilled during the installation procedure.

12 Connect the fuel hose from the fuel tank to the fuel filter/water separator. Tighten the clamp.

Bleed the fuel system:

NOTICE Before bleeding the system, fill the fuel tank.

13 Loosen the vent plug located on the fuel filter/ water separator head.

14 Operate the priming lever of the fuel lift pump until fuel, free from air, comes from the vent plug. Tighten the vent plug.

15 Loosen the air vent screw, located on top of the fuel injection pump.

16 Tighten the air vent screw when air stops coming through the air vent.

17 Clean up any diesel fuel that may have spilled during the bleeding procedure and dispose of properly.

18 Start the engine from ground controls and check for leaks.

https://truckmanualshub.com/

TABLE C PROCEDURES

C-4
Replace the Fuel Filter Element - Perkins Models

Replacing the diesel fuel filter element is essential for good engine performance and service life. A dirty or clogged filter may cause the engine to perform poorly and continued use may cause component damage. Extremely dirty conditions may required that the filter be replaced more often.

DANGER Explosion and fire hazard. Engine fuels are combustible. Perform this procedure in an open, well-ventilated area away from heaters, sparks, flames and lighted tobacco. Always have an approved fire extinguisher within easy reach.

NOTICE Perform this procedure with the engine off.

NOTICE Immediately clean up any fuel that may have spilled during this procedure.

1 Open the engine side turntable cover and locate the fuel filter.

2 Thoroughly clean the outside surfaces of the fuel filter assembly.

3 Hold the bottom cover of the filter element and remove the element retaining screw.

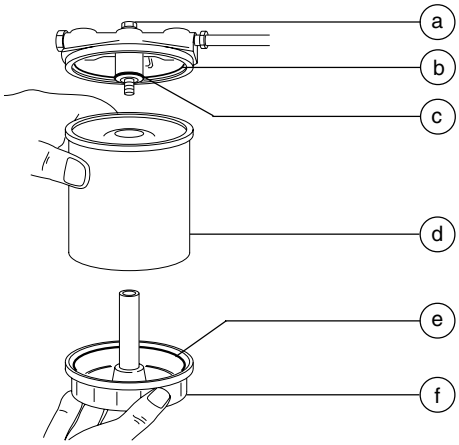

a element retaining screw
b upper seal
c o-ring
d filter element
e lower seal
f bottom cover

4 Lower the bottom cover of the filter.

5 Remove the element and dispose of properly.

6 Clean the inside surfaces of the filter head and the bottom cover.

7 Lightly lubricate the upper seal and the o-ring with clean diesel fuel and install them into the filter head.

https://truckmanualshub.com/

TABLE C PROCEDURES

8 Lightly lubricate the lower seal with clean diesel fuel and install it into the bottom cover.

9 Put the bottom cover under the new element and hold the element squarely to the filter head. Ensure that the element is fitted in the center against the o-ring in the filter head. With the assembly in this position, install the element retaining screw.

Bleed the fuel system:

10 Loosen the vent plug on the side of the fuel injection pump.

11 Operate the priming lever of the fuel lift pump until fuel, free from air, comes from the vent plug. Tighten the vent plug.

12 Clean up any fuel that may have spilled during this procedure.

13 Operate the starter motor for intervals of 15 seconds until the engine starts.

NOTICE It is important to allow the starter motor to cool for 30 seconds between each 15 second interval of operation.

NOTICE If the engine runs correctly for a short time and then stops or runs roughly, check for air in the fuel system. If there is air in the fuel system, there is probably a leak in the low pressure side of the system.

C-5
Replace the Engine Oil and Filter - Perkins Models

Periodic replacement of the engine oil and filter is essential to good engine performance. Operating the machine with an improper oil level or neglecting periodic oil and filter changes can damage engine components. A frequent check of elapsed machine hours against the hours noted on the oil filter will allow the inspector to anticipate and perform oil and filter changes at the 500 hour interval.

CAUTION Bodily injury hazard. Beware of hot engine parts and oil. Contact with hot engine oil and/or engine parts may cause severe burns.

NOTICE Perform this procedure after warming the engine to normal operating temperature.

1 Remove the oil filler cap, located next to the engine oil dipstick.

2 Pull the end of the engine oil drain hose out from under the engine.

3 Remove the plug from the end of the drain hose and allow all of the oil from the engine to drain into a suitable container. See capacity specifications.

NOTICE Do not remove the drain plug located on the side of the oil pan.

4 Install and tighten the plug in the drain hose.

https://truckmanualshub.com/

5 Use an oil filter wrench and remove the oil filter located below the fuel filter. Clean the inside of the filter head.

6 Apply a thin layer of clean engine oil to the new filter gasket. Install the filter and tighten it securely by hand.

7 Use a permanent ink marker to write the date and number of hours from the hour meter on the oil filter.

8 Fill the engine with new oil per specifications and install the oil filler cap.

9 Start the engine from the ground controls and allow the engine to run for 30 seconds. Stop the engine.

10 Check the oil filter and drain hose for leaks.

11 Wait 15 minutes after stopping the engine and check the engine oil level on the dipstick. Add oil if needed.

12 Dispose of the used oil and filter properly.

Perkins 704-30 Engine **Oil capacity (including filter)**	9.6 quarts	9 liters
Oil viscosity requirements		
below 60°F / 15.5°C		15W-40
-10°F to 90°F / -23°C to 32°C		10W-30
above -4°F / -34°C		15W-40
Engine oil should have properties of API classification CF4 grade.		
Oil filter - Genie part number		62422

C-6
Check the Starting Aid - Perkins Models

Complete information to perform this procedure is available in the *Perkins 700 Series Workshop Manual*, Perkins part number TPD 1359E (Genie part number 62424).

https://truckmanualshub.com/

TABLE C PROCEDURES

C-7
Check the Specific Gravity of the Engine Coolant - Liquid Cooled Models

The quality of the engine coolant which is used can have a great effect on the efficiency and life of the cooling system. Old or dirty engine coolant may cause the engine to perform poorly and continued use may cause engine damage.

CAUTION Burn hazard. Beware of hot engine parts and coolant. Contact with hot engine parts and/or coolant may cause severe burns.

NOTICE Perform this procedure with the machine on level ground.

NOTICE Perform this procedure with the engine off.

1 Put on protective clothing and eyewear.

2 Operate the engine until it is warm enough to open the thermostat. Continue to run the engine until the coolant has circulated the cooling system.

3 Stop the engine.

4 Allow the engine to cool until the temperature of the coolant is below 140° F (60° C).

CAUTION Burn hazard. Beware of hot coolant. Contact with hot coolant may cause severe burns.

5 Slowly remove the radiator filler cap. Inspect the cap for wear. Replace as necessary.

CAUTION Burn hazard. Allow any pressure to dissipate gradually before removing the radiator cap.

6 Drain some coolant from the cooling system into a suitable container.

7 Use a coolant hydrometer to check the temperature and specific gravity of the coolant.

8 Adjust the strength of the coolant as necessary for your climate.

9 Install the radiator filler cap.

https://truckmanualshub.com/

TABLE C PROCEDURES

C-8
Replace the PCV Valve - Ford Models

NOTICE Engine specifications require that this procedure be performed every 800 hours.

Yearly replacement of the PCV valve is essential to good engine performance. A malfunctioning PCV valve can restrict crankcase ventilation and may cause engine damage.

NOTICE Perform this procedure with the engine off.

1 Open the engine side turntable cover.

2 Remove the 2 engine pivot plate retaining bolts and swing the engine out away from the machine to access the PCV valve.

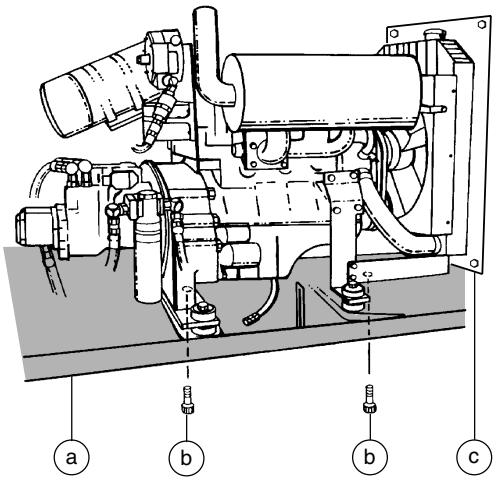

a engine pivot plate
b pivot plate retaining bolts
c air baffle

3 Locate the PCV valve on the engine under the intake manifold. Remove the hose from the PCV valve.

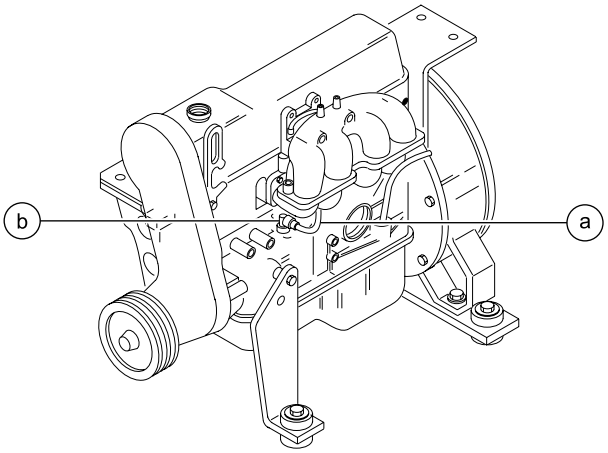

a PCV valve hose
b PCV valve

4 Remove the PCV valve from the canister. Discard the valve.

5 Thoroughly clean the inside and outside of the hose, tubes and fittings

6 Install the new PCV valve and connect the hose.

7 Swing the engine pivot plate back to its original position and install the two engine pivot plate retaining bolts.

PCV Valve - Genie part number	33957

https://truckmanualshub.com/

Table D Procedures

D-1
Check the Boom Wear Pads

Maintaining the boom wear pads in good condition is essential to safe machine operation. Wear pads are placed on boom tube surfaces to provide a low friction, replaceable wear pad between moving parts. Improperly shimmed wear pads or continued use of extremely worn wear pads may result in component damage and unsafe operating conditions.

NOTICE If the wear pads are still within specification, see Repair Procedure 4-2, *How to Shim the Boom.*

1 Start the engine from the ground controls.

2 Raise the end of the boom to a comfortable working height (chest high), then extend the boom 1 foot (30 cm).

3 Measure each wear pad. Replace the wear pad if it is less than specification. If the wear pad is still within specification, shim as necessary to obtain zero clearance and zero drag.

4 Extend and retract the boom through the entire range of motion to check for tight spots that may cause binding or scraping of the boom.

NOTICE Always maintain squareness between the outer and inner boom tubes.

Boom wear pad specifications

Upper and side wear pads	9/16 inch	14.3 mm
Bottom wear pads	11/16 inch	17.5 mm

D-2
Check the Extendable Axle Wear Pads

Maintaining the axle wear pads in good condition is essential to safe machine operation. Wear pads are placed on axle tube surfaces to provice a low friction, replaceable wear pad between moving parts. Improperly shimmed wear pads or continued use of worn out wear pads may result in component damage and unsafe operating conditions.

NOTICE If the wear pads are not worn below specification but are still within specification, see Repair Procedure 16-1, *Extendable Axles.*

1 Start the engine from the ground controls and extend the axles.

2 Measure each wear pad. Replace the wear pad if it is less than specification. If the wear pad is not less than specification, shim as necessary to obtain zero clearance and zero drag.

3 Extend and retract the axles through the entire range of motion to check for tight spots that may cause binding or scraping of the axle tubes.

NOTICE Always maintain squareness between the outer and inner axle tubes.

Extendable axle wear pad specifications

Bottom and side wear pads	7/16 inch	11 mm

https://truckmanualshub.com/

D-3
Check the Free-wheel Configuration

Proper use of the free-wheel configuration is essential to safe machine operation. The free-wheel configuration is used primarily for towing. A machine configured to free-wheel without operator knowledge may cause death or serious injury and property damage.

WARNING Collision hazard. Select a work site that is firm and level.

CAUTION Component damage hazard. If the machine must be towed, do not exceed 2 mph (3.2 km/h).

Non-steering wheels: All models

1 Chock the steer wheels to prevent the machine from rolling.

2 Center a lifting jack of ample capacity (20,000 lbs/9072 kg) under the drive chassis between the non-steer wheels.

3 Lift the wheels off the ground and then place blocks under the drive chassis for support.

4 Disengage the drive hubs by turning over the drive hub disconnect caps on each non-steering wheel hub.

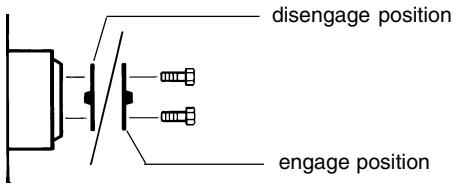

5 Manually rotate each non-steering wheel.

⊙ Result: Each non-steering wheel should rotate with minimum effort.

6 Re-engage the drive hubs by turning over the hub disconnect caps. Rotate each wheel to check for engagement. Lift the machine and remove the blocks.

WARNING Collision hazard. Failure to re-engage the drive hubs could result in death or serious injury and property damage.

Steer wheels: 4WD models

7 Chock the non-steering wheels to prevent the machine from rolling.

8 Center a lifting jack of ample capacity (20,000 lbs/9072 kg) under the drive chassis between the steer wheels.

9 Lift the wheels off the ground and then place blocks under the drive chassis for support.

10 Disengage the drive hubs by turning over the drive hub disconnect caps on each steer wheel hub.

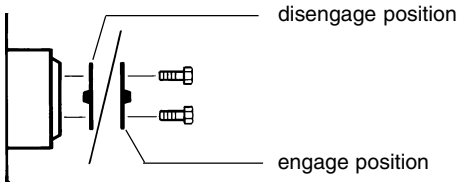

https://truckmanualshub.com/

11 Manually rotate each steer wheel.

⊙ Result: Each steer wheel should rotate with minimum effort.

12 Re-engage the drive hubs by turning over the drive hub disconnect caps. Rotate each wheel to check for engagement. Lift the machine and remove the blocks.

WARNING Collision hazard. Failure to re-engage the drive hubs could result in death or serious injury and property damage.

All models:

13 Be sure the free-wheel valve on the drive pump is closed (clockwise).

NOTICE The free-wheel valve is located on the drive pump, and should always remain closed.

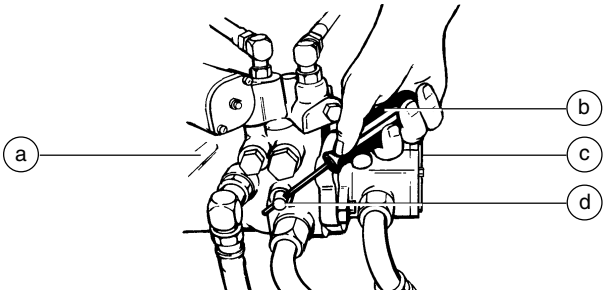

a drive pump
b screwdriver
c lift pump
d free-wheel valve

D-4
Check the Turntable Rotation Bearing Bolts

Maintaining proper torque on the turntable bearing bolts is essential to safe machine operation. Improper bolt torque could result in an unsafe operating condition and component damage.

1 Raise the boom and place a safety chock on the lift cylinder rod. Carefully lower the boom onto the lift cylinder safety chock.

WARNING Crushing hazard. Keep hands away from cylinder and all moving parts when lowering the boom.

NOTICE The lift cylinder safety chock is available through Genie (part number 33484).

https://truckmanualshub.com/

TABLE D PROCEDURES

2 Be sure that each turntable mounting bolt is torqued in sequence to 210 ft-lbs (285 Nm).

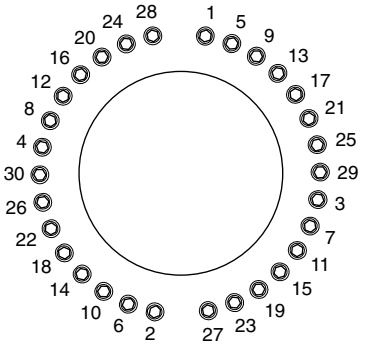

Bolt torque sequence

3 Raise the boom and remove the safety chock.

4 Lower the boom to the stowed position.

5 Check to ensure that each bearing mounting bolt under the drive chassis is torqued in sequence to 210 ft-lbs (285 Nm).

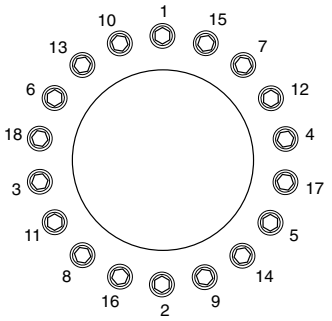

Bolt torque sequence

D-5
Grease the Turntable Rotation Bearing and Rotate Gear

Yearly application of lubrication to the turntable bearing and rotate gear is essential to good machine performance and service life. Continued use of an improperly greased bearing and gear will result in component damage.

1 Locate the grease fitting on the platform end of the tank side bulkhead.

2 Pump grease into the turntable rotation bearing. Rotate the turntable in increments of 4 to 5 inches (10 to 13 cm) at a time and repeat this step until the entire bearing has been greased.

3 Apply grease to each tooth of the drive gear, located under the turntable.

Grease type	Multipurpose grease

https://truckmanualshub.com/

TABLE D PROCEDURES

D-6
Replace the Drive Hub Oil

Replacing the drive hub oil is essential for good machine performance and service life. Failure to replace the drive hub oil at yearly intervals may cause the machine to perform poorly and continued use may cause component damage.

Drive Hubs:

1 Select the drive hub to be serviced. Drive the machine until one of the two plugs is at the lowest point.

2 Remove both plugs and drain the oil into a suitable container.

3 Drive the machine until one plug is at the top and the other is at 90 degrees.

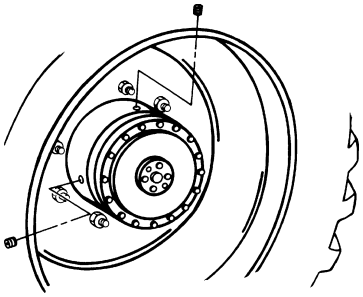

4 Fill the hub with oil from the top hole until the oil level is even with the bottom of the side hole. Apply pipe thread sealant to the plugs. Install the plugs.

5 Repeat steps 1 through 4 for all the other drive hubs.

Oil capacity per hub	44 fl oz 1.30 liters

Type: SAE 90 multipurpose hypoid gear oil - API service classification GL5

Turntable Rotate Drive Hub:

1 Secure the turntable from rotating with the turntable rotation lock pin.

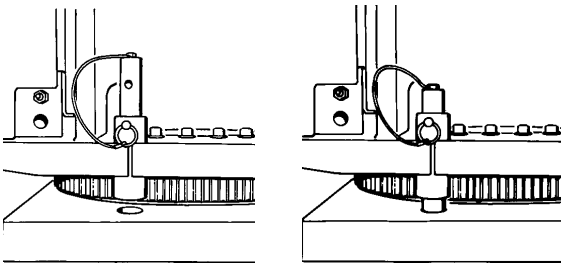

unlocked locked

2 Remove the motor/brake mounting bolts, and then remove the motor and brake from the drive hub and set them to the side.

CAUTION Component damage hazard. Hoses can be damaged if they are kinked or pinched.

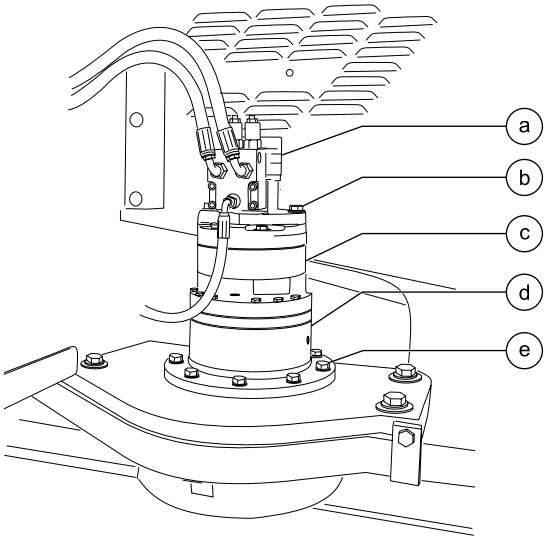

a motor
b motor/brake mounting bolts
c brake
d drive hub
e drive hub mounting bolts

https://truckmanualshub.com/

3 Remove the drive hub mounting bolts, and use a lifting device to remove the drive hub from the machine.

4 Remove the plug from the side of the drive hub. Then drain the oil from the hub.

5 Install the drive hub. Torque the drive hub mounting bolts to 180 ft-lbs (244 Nm).

6 Install the brake and motor onto the drive hub. Torque the motor/brake mounting bolts to 180 ft-lbs (244 Nm).

7 Fill the hub with oil from the side hole until the oil level is even with the bottom of the hole. Apply pipe thread sealant to the plug. Install the plug.

8 Adjust turntable rotation gear backlash. See 13-1, *How to Adjust the Turntable Rotation Gear Backlash.*

Turntable rotate drive hub	
Oil capacity	17 fluid ounces 0.51 liters
Type: SAE 90 multipurpose hypoid gear oil - API service classification GL5	

D-7
Replace the Engine Oil and Filter - Deutz Models

Periodic replacement of the engine oil and filter is essential to good engine performance. Operating the machine with an improper oil level or neglecting periodic oil and filter changes can damage engine components. A frequent check of elapsed machine hours against the hours noted on the oil filter will allow the inspector to anticipate and perform oil and filter changes at the 1000 hour interval.

CAUTION Bodily injury hazard. Beware of hot engine parts and oil. Contact with hot engine oil and/or engine parts may cause severe burns.

NOTICE Perform this procedure after warming the engine to normal operating temperature.

1 Remove the oil filler cap, located next to the dipstick.

2 Pull the end of the engine oil drain hose out from under the engine.

3 Remove the plug from the end of the drain hose and allow all of the oil from the engine to drain into a suitable container. See capacity specifications.

NOTICE Do not remove the drain plug located on the side of the oil pan.

https://truckmanualshub.com/

TABLE D PROCEDURES

4 Install and tighten the plug in the drain hose.

5 Use an oil filter wrench and remove the oil filter.

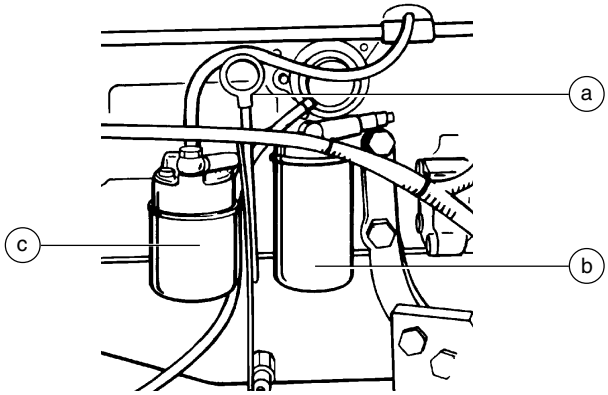

Deutz Diesel engine
a engine oil level dipstick
b fuel filter
c oil filter

6 Apply a thin layer of clean engine oil to the new filter gasket. Install the filter and tighten it securely by hand.

7 Use a permanent ink marker to write the date and number of hours from the hour meter on the oil filter.

8 Fill the engine with new oil per specifications and install the oil filler cap.

9 Start the engine from the ground controls. Allow the engine to run for 30 seconds then turn the engine off.

10 Check the oil filter and drain hose for leaks.

11 Check the engine oil level dipstick. Add oil if needed.

Deutz F4l 1011 Engine	11 quarts
Oil capacity (including filter)	10.5 liters
Oil viscosity requirements	
below 60°F / 15.5°C (synthetic)	5W-30
-10°F to 90°F / -23°C to 32°C	10W-40
above -4°F / -34°C	15W-40
Engine oil should have properties of API classification CC/SE or CC/SF grades.	
Oil filter - Genie part number	49924

https://truckmanualshub.com/

D-8
Clean the Fuel Pump Strainer - Deutz Models

Cleaning the fuel pump strainer is essential for good engine performance and service life. A dirty or clogged strainer may cause the engine to perform poorly and continued use may cause component damage. Extremely dirty conditions or not operating the machine for extended periods of time may require that the strainer be cleaned more often.

DANGER Explosion and fire hazard. Engine fuels are combustible. Perform this procedure in an open, well-ventilated area away from heaters, sparks, flames and lighted tobacco. Always have an approved fire extinguisher within easy reach.

NOTICE Perform this procedure with the engine off.

NOTICE Immediately clean up any fuel that may have spilled during this procedure.

1 Open the engine side turntable cover and locate the fuel pump, located next to the engine oil dip stick.

2 Turn the manual fuel shutoff valve, located at the fuel tank, to the CLOSED position.

3 Remove the fuel pump cover retaining fastener. Remove the cover.

4 Gently clean the fuel strainer with clean diesel fuel or a mild solvent.

5 Install the fuel strainer and pump cover onto the fuel pump. Install and tighten the fuel pump cover retaining fastener.

6 Turn the manual fuel shutoff valve, located at the fuel tank, to the OPEN position.

7 Start the engine from the ground controls and inspect the fuel filter for leaks.

DANGER Explosion and fire hazard. If a fuel leak is discovered, keep any additional personnel from entering the area and do not operate the machine. Repair the leak immediately.

NOTICE Be sure the fuel filter is full of fuel before attempting to start the engine.

https://truckmanualshub.com/

TABLE D PROCEDURES

D-9
Replace the Diesel Fuel Filter/Water Separator - Deutz Models

Replacing the diesel fuel filter/water separator is essential to good engine performance and service life. A dirty or clogged filter/water separator may cause the engine to perform poorly and continued use may cause component damage. Extremely dirty conditions may require that the filter/water separator be replaced more often.

DANGER Explosion and fire hazard. Engine fuels are combustible. Replace the fuel filter/water separator in an open, well-ventilated area away from heaters, sparks, flames and lighted tobacco. Always have an approved fire extinguisher within easy reach.

NOTICE Perform this procedure with the engine off.

1 Turn the manual fuel shutoff valve, located at the fuel tank, to the CLOSED position.

2 Remove the fuel filter/water separator with a filter wrench.

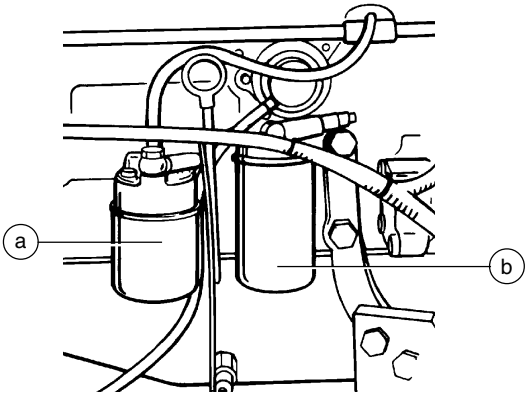

a oil filter
b fuel filter/water separator

3 Fill the new filter with fresh diesel fuel and apply a thin layer of diesel fuel to the new fuel filter gasket.

4 Install the new filter and tighten it securely by hand. Clean up any diesel fuel that might have spilled during the procedure.

5 Turn the manual fuel shutoff valve, located at the fuel tank, to the OPEN position.

6 Start the engine from the ground controls and inspect the fuel filter for leaks.

DANGER Explosion and fire hazard. If a fuel leak is discovered, keep any additional personnel from entering the area and do not operate the machine. Repair the leak immediately.

https://truckmanualshub.com/

TABLE D PROCEDURES

D-10
Change the Fuel Hoses - Deutz Models

Maintaining the fuel hoses in good condition is essential to safe operation and good engine performance. Failure to detect a worn, cracked or leaking fuel hose may cause an unsafe operating condition.

DANGER Explosion and fire hazard. Engine fuels are combustible. Replace the fuel hoses in an open, well-ventilated area away from heaters, sparks, flames and lighted tobacco. Always have an approved fire extinguisher within easy reach.

CAUTION Component damage hazard. Be sure the fuel hoses are routed the same way the original hoses were.

NOTICE Perform this procedure with the engine off and cooled.

1 Remove the 2 engine pivot plate retaining bolts and swing the engine out away from the machine to access the fuel hoses.

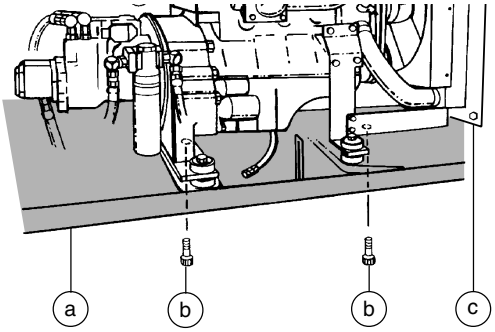

a engine pivot plate
b pivot plate retaining bolts
c oil drain hose
d air baffle

2 Place a suitable container under the engine pivot plate.

3 At the fuel pump, disconnect the fuel hose to the fuel tank and drain the fuel tank into the container.

4 Remove and replace all of the fuel hoses and clamps according to the following illustration:

DANGER Explosion and fire hazard. Fuel Injection systems operate at a very high pressure. Fuel may be expelled under pressure if the hoses are removed too quickly. Loosen the fuel lines very slowly to allow the fuel pressure to dissipate gradually. Wrap a cloth around fuel hoses to absorb leaking fuel before disconnecting them.

https://truckmanualshub.com/

TABLE D PROCEDURES

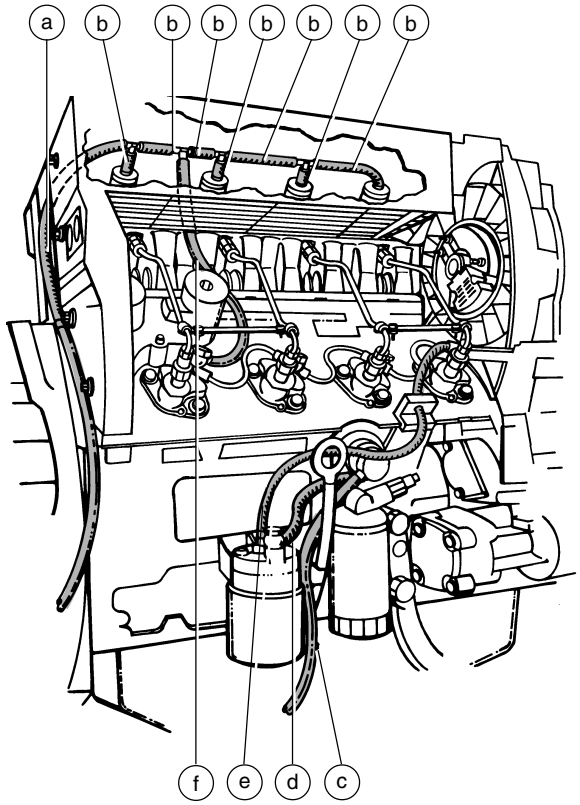

a hose from the injector to the fuel tank
b hoses connecting injectors
c hose from the fuel shutoff valve to the fuel pump
d hose from the fuel pump to the fuel filter
e hose from the fuel filter to the injection pump
f hose from the injection pump to the injectors

D-11
Check the Engine Valve Clearances - Perkins Models

Complete information to perform this procedure is available in the *Perkins Workshop Manual*, (Perkins part number TPD 1359E) Genie part number 62424.

D-12
Clean the Engine Breather Assembly - Perkins Models

Complete information to perform this procedure is available in the *Perkins Workshop Manual*, (Perkins part number TPD 1359E) Genie part number 62424.

https://truckmanualshub.com/

Table E Procedures

E-1
Test or Replace the Hydraulic Oil

Replacement or testing of the hydraulic oil is essential for good machine performance and service life. Dirty oil and suction strainers may cause the machine to perform poorly and continued use may cause component damage. Extremely dirty conditions may require oil changes to be performed more frequently.

NOTICE The machine uses Dexron equivalent hydraulic oil. Before replacing the hydraulic oil, the oil may be tested by an oil distributor for specific levels of contamination to verify that changing the oil is necessary. **If the hydraulic oil is not replaced at the two year inspection, test the oil quarterly. Replace the oil when it fails the test.**

NOTICE Perform this procedure with the boom in the stowed position.

NOTICE When removing a hose assembly or fitting, the O-ring on the fitting and/or hose end must be replaced and then torqued to specification during installation.
Refer to Section Two, *Hydraulic Hose and Fitting Torque Specifications.*

1 Remove the fuel tank. See Repair Section 12-1, *How to Remove the Fuel Tank.*

2 Close the two hydraulic shutoff valves located at the hydraulic tank.

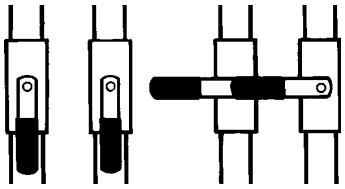

CAUTION Component damage hazard. The engine must not be started with the hydraulic tank shutoff valves in the CLOSED position or component damage will occur. If the tank valves are closed, remove the key from the key switch and tag the machine to inform personnel of the condition.

3 Remove the drain plug from the hydraulic tank.

4 Completely drain the tank into a suitable container. See capacity specifications.

5 Tag, disconnect and plug the two suction hoses that are attached to the hydraulic tank shutoff valves.

6 Disconnect and plug the T-fitting located at the return filter with the 2 hoses connected to it. Cap the fitting on the return filter housing.

7 Disconnect and plug the supply hose for the auxiliary power unit. Cap the fitting on the hydraulic tank.

8 Remove the retaining fasteners from the hydraulic tank hold down straps. Remove the hold down straps from the hydraulic tank.

https://truckmanualshub.com/

TABLE E PROCEDURES

9 Support the hydraulic tank with 2 lifting straps. Place one lifting strap at each end of the tank and attach the lifting straps to an appropriate lifting device.

10 Remove the hydraulic tank from the machine.

WARNING Crushing hazard. The hydraulic tank may become unbalanced and fall if it is not properly supported and secured to the lifting device.

11 Remove the suction strainers from the tank and clean them using a mild solvent.

12 Rinse out the inside of the tank using a mild solvent.

13 Install the suction strainers using pipe thread sealant on the threads.

14 Install the drain plug using pipe thread sealant on the threads.

15 Install the hydraulic tank onto the machine.

16 Install the two suction hoses and the supply hose for the auxiliary power unit.

17 Fill the tank with hydraulic oil until the level is within the top 2 inches (5 cm) of the sight gauge. Do not overfill.

18 Clean up any oil that may have spilled.

19 Open the hydraulic tank shutoff valves.

CAUTION Component damage hazard. Be sure to open the two hydraulic tank shutoff valves and prime the pump after installing the hydraulic tank. Refer to Repair Procedure 10-2, *How to Prime the Pump*.

NOTICE Always use pipe thread sealant when installing the drain plug and strainers.

NOTICE Use only Dexron equivalent hydraulic fluid.

Hydraulic system	
Hydraulic tank capacity	45 gallons 170 liters
Hydraulic system capacity (including tank)	55 gallons 208 liters
Hydraulic fluid	Dexron equivalent

https://truckmanualshub.com/

E-2
Change or Recondition the Engine Coolant - Liquid Cooled Models

Replacing or reconditioning the engine coolant is essential to good engine performance and service life. Old or dirty coolant may cause the engine to perform poorly and continued use may cause engine damage. Extremely dirty conditions may require coolant to be changed more frequently.

CAUTION Bodily injury hazard. Beware of hot engine parts and coolant. Contact with hot engine parts and/or coolant may cause severe burns.

NOTICE Perform this procedure with the engine off and cooled.

1 Remove the 2 engine pivot plate retaining bolts. Swing the engine pivot plate away from the machine to access the cooling system.

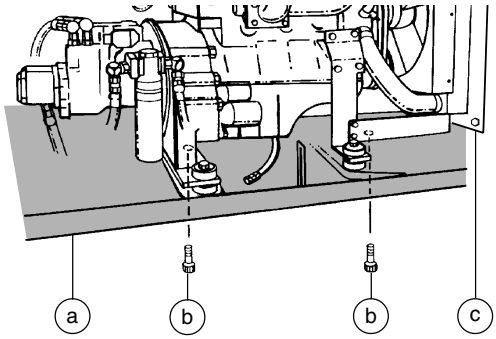

a engine pivot plate
b pivot plate retaining bolts
c air baffle

2 Put on protective clothing and eye wear.

3 Disconnect the coolant return hose at the radiator and drain the coolant return tank into a suitable container.

4 Slowly remove the radiator cap from the radiator.

CAUTION Bodily injury hazard. Allow any pressure to dissipate gradually before removing the radiator cap.

5 Open the drain valve on the radiator and allow all the coolant to drain into a suitable container.

6 After all the coolant has drained, close the drain valve. Connect the coolant return hose to the radiator.

7 Open the drain valve on the engine block and allow the coolant to drain into a suitable container. After the fluid has drained, close the drain valve.

8 Replace all coolant hoses and clamps.

9 Fill the radiator with the proper coolant mixture (coolant and water) for your climate until it is full.

10 Fill the coolant recovery tank to the NORMAL range.

11 Clean up any coolant that may have spilled during this procedure.

12 Start the engine from the ground controls and let it run for 30 seconds. Turn the engine off and inspect for leaks.

https://truckmanualshub.com/

TABLE E PROCEDURES

13 Check the coolant level in the coolant recovery tank. Add coolant if needed.

14 Swing the engine pivot plate back to its original position and install the two engine pivot plate retaining bolts.

15 Start the engine from the ground controls and let it run until it reaches normal operating temperature.

16 Turn the engine off. Allow the engine to cool.

17 Check the coolant level in the coolant recovery tank. Add coolant if needed.

Coolant capacity		
Ford LRG-425 EFI Engine	11.5 quarts	10.9 liters
Perkins 704-30 Engine	10 quarts	9.5 liters

E-3
Change the Fuel Hoses - Ford Models

Maintaining the fuel hoses in good condition is essential to safe operation and good engine performance. Failure to detect a worn, cracked or leaking fuel hose may cause an unsafe operating condition.

DANGER Explosion and fire hazard. Engine fuels are combustible. Replace the fuel lines in an open, well-ventilated area away from heaters, sparks, flames and lighted tobacco. Always have an approved fire extinguisher within easy reach.

CAUTION Component damage hazard. Be sure the fuel hoses are routed the same way the original hoses were.

NOTICE Perform this procedure with the engine off and cooled.

1 Tag, disconnect and plug the fuel hose from the fuel tank at the manual shutoff valve.

https://truckmanualshub.com/

TABLE E PROCEDURES

2 Remove the 2 engine pivot plate retaining bolts and swing the engine out away from the machine to access the fuel hoses.

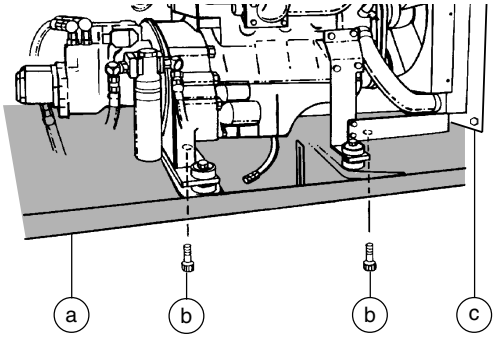

a engine pivot plate
b pivot plate retaining bolts
c air baffle

3 Place a suitable container under the engine pivot plate. See capacity specifications.

4 Locate the fuel pressure regulator/filter and the fuel pump on the engine pivot plate behind the engine.

5 At the fuel pressure regulator/filter, disconnect the fuel hose to the fuel tank.

DANGER Explosion and fire hazard. Electronic Fuel Injection (EFI) systems operate at a very high pressure. Fuel may be expelled under pressure if the hoses are removed too quickly. Loosen the fuel hoses very slowly to allow the fuel pressure to dissipate gradually. Wrap a cloth around fuel hoses to absorb leaking fuel before disconnecting them.

6 Remove and replace all of the fuel hoses and clamps according to the following hose routing diagram:

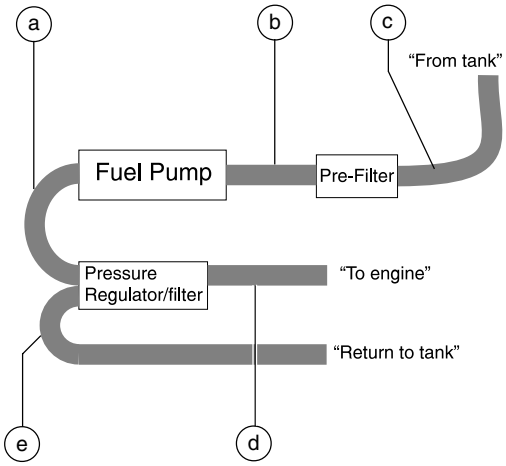

a high pressure hose from fuel pump to regulator/filter
b hose from fuel pre-filter to fuel pump
c hose from fuel tank to fuel pre-filter
d high pressure hose from regulator/filter to engine
e hose from regulator/filter to tank

7 Clean up any fuel that may have spilled during this procedure.

8 Start the engine from the ground controls. Inspect the fuel filter and hoses for leaks.

DANGER Explosion and fire hazard. If a fuel leak is discovered, keep any additional personnel from entering the area and do not operate the machine. Repair the leak immediately.

9 Swing the engine pivot plate back to its original position and install the two engine pivot plate retaining bolts.

https://truckmanualshub.com/

TABLE E PROCEDURES

E-4
Replace the Engine Air Breather - Perkins Models

Complete information to perform this procedure is available in the *Perkins 700 Series Workshop Manual*, Perkins part number TPD 1359E (Genie part number 62424).

E-5
Grease the Steer Axle Wheel Bearings - 2WD Models

Maintaining the steer axle wheel bearings is essential for safe machine operation and service life. Operating the machine with loose or worn wheel bearings may cause an unsafe operating condition and continued use may result in component damage. Extremely wet or dirty conditions or regular steam cleaning and pressure washing of the machine may require that this procedure be performed more often.

1 Loosen the wheel lug nuts. Do not remove them.

2 Block the non-steering wheels. Center a lifting jack under the steer axle.

3 Raise the machine approximately 6 inches (15 cm). Place blocks under the drive chassis for support.

4 Remove the lug nuts. Remove the tire and wheel assembly.

5 Check for wheel bearing wear by attempting to move the wheel hub side to side, then up and down.

⊙ Result: There should be no side to side or up and down movement.

Skip to step 23 if there is no movement.

https://truckmanualshub.com/

TABLE E PROCEDURES

6 Remove the dust cap from the hub and remove the cotter pin from the castle nut.

NOTICE Always replace the cotter pin with a new one when removing the castle nut or when checking the torque of the castle nut.

7 Tighten the castle nut to 35 ft-lbs (47 Nm) to seat the bearings.

8 Loosen the castle nut, then re-tighten to 8 ft-lbs (11 Nm).

9 Check for wheel bearing wear by attempting to move the wheel hub side to side, then up and down.

⊙ Result: If there is side to side or up and down movement, proceed to step 10 to replace the wheel bearings with new ones.

NOTICE When replacing a wheel bearing, both the inner and outer bearings, including the pressed-in races, must be replaced.

⊙ Result: If there is no side to side or up and down movement, grease the wheel bearings.

10 Remove the castle nut.

NOTICE Always replace the cotter pin with a new one when removing the castle nut or when checking the torque of the castle nut.

11 Pull the hub off of the spindle. The washer and outer bearing should fall loose from the hub.

12 Place the hub on a flat surface and gently pry the bearing seal out of the hub. Remove the inner bearing.

13 Pack both bearings with clean, fresh grease.

14 Place the large inner bearing into the rear of the hub.

15 Install a new bearing grease seal into the hub by pressing it evenly into the hub until it is flush.

NOTICE Always replace the bearing grease seal when removing the hub.

16 Slide the hub onto the yoke spindle.

CAUTION Component damage hazard. Do not apply excessive force or damage to the lip of the seal may occur.

17 Place the outer bearing into the hub.

18 Install the washer and castle nut.

19 Torque the castle nut to 35 ft-lbs (47 Nm) to seat the bearings.

20 Loosen the castle nut, then torque the castle nut to 8 ft-lbs (11 Nm).

21 Install a new cotter pin. Bend the cotter pin to lock it in place.

NOTICE Always replace the cotter pin with a new one when removing the castle nut or when checking the torque of the castle nut.

22 Install the dust cap.

23 Install the tire and wheel assembly. Torque the wheel lug nuts to 420 ft-lbs (569.5 Nm).

24 Center a lifting jack under the steer axle.

25 Raise the machine approximately 6 inches (15 cm). Remove the blocks from under the drive chassis.

26 Lower the machine.

https://truckmanualshub.com/

TABLE E PROCEDURES

E-6
Check the Fuel Injectors - Perkins Diesel Models

NOTICE Engine specifications require that this procedure be performed every 3000 hours or 18 months, whichever comes first.

Complete information to perform this procedure is available in the *Perkins 700 Series Workshop Manual*, Perkins part number TPD 1359E (Genie part number 62424).

https://truckmanualshub.com/

Troubleshooting Flow Charts

Observe and Obey:

- ☑ Troubleshooting and repair procedures shall be completed by a person trained and qualified on the repair of this machine.
- ☑ Immediately tag and remove from service a damaged or malfunctioning machine.
- ☑ Repair any machine damage or malfunction before operating the machine.
- ☑ Unless otherwise specified, perform each repair procedure with the machine in the following configuration:
  - · Machine parked on a flat level surface
  - · Boom in stowed position
  - · Turntable rotated with the boom between the non-steering wheels
  - · Turntable secured with the turntable rotation lock pin
  - · Key switch in the OFF position with the key removed
  - · Wheels chocked

Before Troubleshooting:

- ☑ Read, understand and obey the safety rules and operating instructions printed in the *Genie S-80 & Genie S-85 Operator's Manual.*
- ☑ Be sure that all necessary tools and test equipment are available and ready for use.
- ☑ Read each appropiate flow chart thoroughly. Attempting shortcuts may produce hazardous conditions.
- ☑ Be aware of the following hazards and follow generally accepted safe workshop practices.

⚠DANGER Crushing hazard. When testing or replacing any hydraulic component, always support the structure and secure it from movement.

⚠WARNING Electrocution hazard. Contact with electrically charged circuits could result in death or serious injury. Remove all rings, watches and other jewelry.

⚠WARNING Bodily injury hazard. Spraying hydraulic oil can penetrate and burn skin. Loosen hydraulic connections very slowly to allow the oil pressure to dissipate gradually. Do not allow oil to squirt or spray.

NOTICE Perform all troubleshooting on a firm level surface.

NOTICE Two persons will be required to safely perform some troubleshooting procedures.

https://truckmanualshub.com/

TROUBLESHOOTING FLOW CHARTS

About This Section

When a malfunction is discovered, the flow charts in this section will help a service professional pinpoint the cause of the problem. To use this section, basic hand tools and certain pieces of test equipment are required—voltmeter, ohmmeter, pressure gauges.

The location of terminals mentioned in this section can be found on the appropriate electrical or hydraulic schematics provided in Section 6, *Schematics*.

Since various degrees of a particular function loss may occur, selecting the appropriate flow chart may be troublesome. When a function will not operate with the same speed or power as a machine in good working condition, refer to the flow chart which most closely describes the problem.

General Repair Process

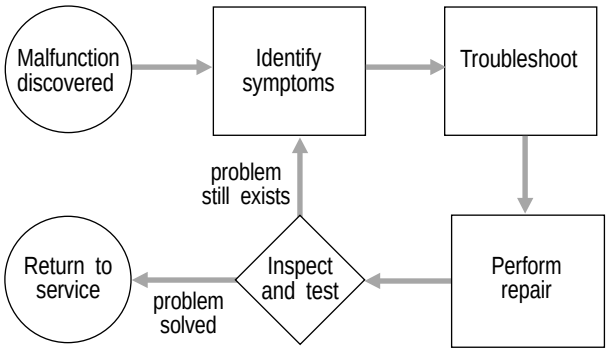

https://truckmanualshub.com/

Fault Code Chart

Fault Code	Problem	Cause	Solution
11	--	--	Normal operation
12	Throttle Position (TP) sensor low voltage.	Faulty TP sensor OR sensor wires shorted to ground OR poor terminal connection.	Check for poor terminal connections OR shorted wires from the TP sencor to the ECM OR replace the TP sensor.
14	Manifold Absolute Pressure (MAP) sensor low voltage.	Faulty MAP sensor OR sensor wires shorted to ground OR poor terminal connection.	Check for poor terminal connections OR wires shorted to ground OR replace MAP sensor.
21	Engine speed exceeded 4000 RPM.	Obsrtruction in throttle body OR faulty ECM.	Check for obstructions in the throttle body that could cause binding of the throttle assembly OR replace ECM.
22	Throttle Position (TP) sensor high voltage.	The ECM senses a signal from the TP sensor that is greater than 4.9V DC OR the TP sensor wiring is shorted to ground OR there is a poor terminal connection OR the TP sensor is faulty.	Check for poor terminal connections OR shorted wires from the TP sensor to the ECM OR replace the TP sensor.
24	Manifold Absolute Pressure (MAP) sensor high voltage.	Faulty MAP sensor OR sensor wires shorted to ground OR poor terminal connection.	Check for poor terminal connections OR shorted wires from the MAP sensor to the ECM to ground OR replace MAP sensor.

https://truckmanualshub.com/

FAULT CODE CHART

Fault Code	Problem	Cause	Solution
31	Fuel pump low voltage.	Voltage to fuel pump is greater than or equal to 2V DC below ignition voltage.	Test the fuel pump relay, see the Repair Section OR check for poor terminal connection from the fuel pump relay to fuel pump OR replace the fuel pump.
32	Heated Oxygen (HO2) sensor low voltage.	Water in the fuel, misfiring cylinder, plugged fuel filter OR the HO2 sensor wiring is shorted to ground OR there is a poor terminal connection OR the HO2 sensor is faulty.	Check for water in the fuel, misfiring cylinder or plugged fuel filter OR check for poor terminal connections or shorted wires from the HO2 sensor to the ECM to ground OR replace HO2 sensor.
33	Engine Coolant Temperature (ECT) sensor high voltage.	Engine is overheating OR sensor wires shorted to ground or poor terminal connections OR ECT sensor is faulty.	Check engine coolant level OR check for shorted wires or poor terminal connections from the ECT sensor to the ECM OR replace the ECT sensor.
35	Intake Air Temerature (IAT) sensor high voltage.	Engine is overheating OR sensor wires shorted to ground or poor terminal connections OR ECT sensor is faulty.	Check for poor terminal connections or shorted wires from the IAT sensor to the ECM to ground OR replace IAT sensor.
41	Fuel pump high voltage.	Fuel pump is receiving voltage when the ECM is not sending the signal to the fuel pump to turn ON.	Test the fuel pump relay, see the Repair Section OR check for poor terminal connection from the fuel pump relay to fuel pump OR replace the ECM.

https://truckmanualshub.com/

FAULT CODE CHART

Fault Code	Problem	Cause	Solution
42	Heated Oxygen (HO2) sensor high voltage.	A leaking or malfunctioning fuel injector, misfiring cylinder, faulty TP sensor or contamination of fuel OR use of improper thread sealant on sensor threads OR sensor wires shorted to ground or poor terminal connections OR HO2 sensor is faulty.	Test for a leaking or malfunctioning fuel injector, misfiring cylinder or bad TP sensor. Remove HO2 sensor and check condition of sensor for contamination OR check for poor terminal connections or shorted wires from the HO2 sensor to the ECM to ground OR replace HO2 sensor.
43	Engine Coolant Temperature (ECT) sensor low voltage.	ECM detects excessively low signal voltage from the ECT sensor.	Check engine coolant level OR check for shorted wires or poor terminal connections from the ECT sensor to the ECM OR replace the ECT sensor.
45	Intake Air Temperature (IAT) sensor low voltage.	ECM detects an excessively low signal voltage from the IAT sensor.	The IAT sensor shares the same ground wire as the ECT and MAP sensors. Check for shorted wires or poor terminal connections from the IAT sensor to the ECT and MAP sensors to the ECM OR replace the IAT sensor.
51	Low oil pressure.	Faulty oil pressure switch, wires shorted to ground or not enough engine oil.	Check engine oil level OR check for shorted wires or poor terminal connections from the oil pressure switch to the ECM OR replace the oil pressure switch

https://truckmanualshub.com/

FAULT CODE CHART

Fault Code	Problem	Cause	Solution
52	Crankshaft Position (CKP) sensor senses extra or missing pulses.	The CKP and CMP sensors work together; if one is bad, the other one won't work correctly and causes the ECM to detect a fault. The ECM uses the signal pulses from the CKP and CMP sensors to initiate sequential fuel injection.	Check for shorted wires or poor terminal connections from the CKP and CMP sensors to the ECM OR replace the CKP or CMP sensor.
53	Camshaft Position (CMP) sensor senses unknown pattern.	The CMP and CKP sensors work together; if one is bad, the other one won't work correctly and causes the ECM to detect a fault. The ECM uses the signal pulses from the CKP and CMP sensors to initiate sequential fuel injection.	Check for shorted wires or poor terminal connections from the CKP and CMP sensors to the ECM OR replace the CKP or CMP sensor.
54	ECM Fault - Illegal Operation.	The ECM received an illegal instruction signal from one or more of the sensors and has gone into a default program and then return to normal operation	Replace the ECM.

https://truckmanualshub.com/

FAULT CODE CHART

Fault Code	Problem	Cause	Solution
55	ECM - Illegal Interuption	The ECM received an illegal interruption signal from one or more engine sensors and has gone into a default program and then return to normal operation.	Replace the ECM.
56	ECM - Computer Operating Properly (COP) failure	Under normal operation the ECM will store numbers into memory. If this does not happen, it will reset itself and set fault code 56.	Replace the ECM.
61	System voltage low.	Battery supply voltage to the ECM is 8V DC or less.	Check battery and/or alternator condition OR check for shorted wires or poor terminal connections from the battery to the ECM.
62	System voltage high.	Battery supply voltage to the ECM is 18V DC or more.	Check battery and/or alternator condition OR check for shorted wires or poor terminal connections from the battery to the ECM.

https://truckmanualshub.com/

Chart 1

Engine Will Not Crank Over

Be sure the key switch is in the appropriate position.

Be sure that both Emergency Stop buttons are pulled out to the ON position.

Be sure the circuit breakers are not tripped.

Be sure the battery is fully charged.

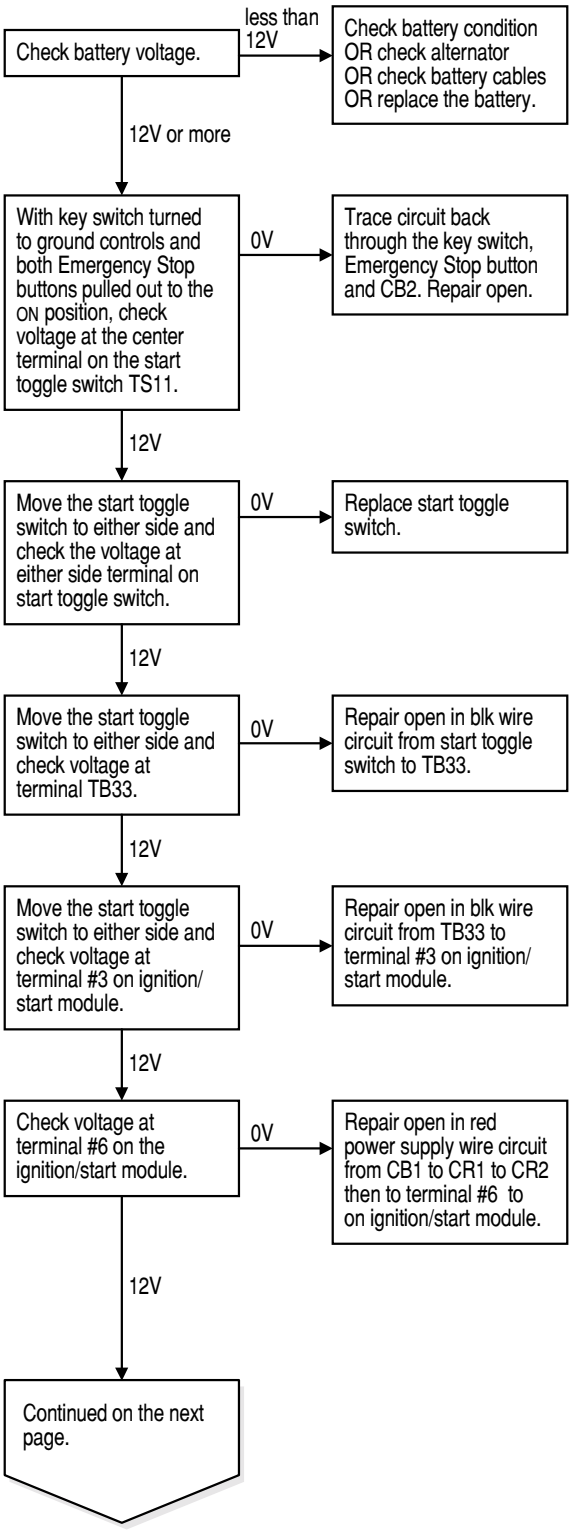

https://truckmanualshub.com/

CHART 1

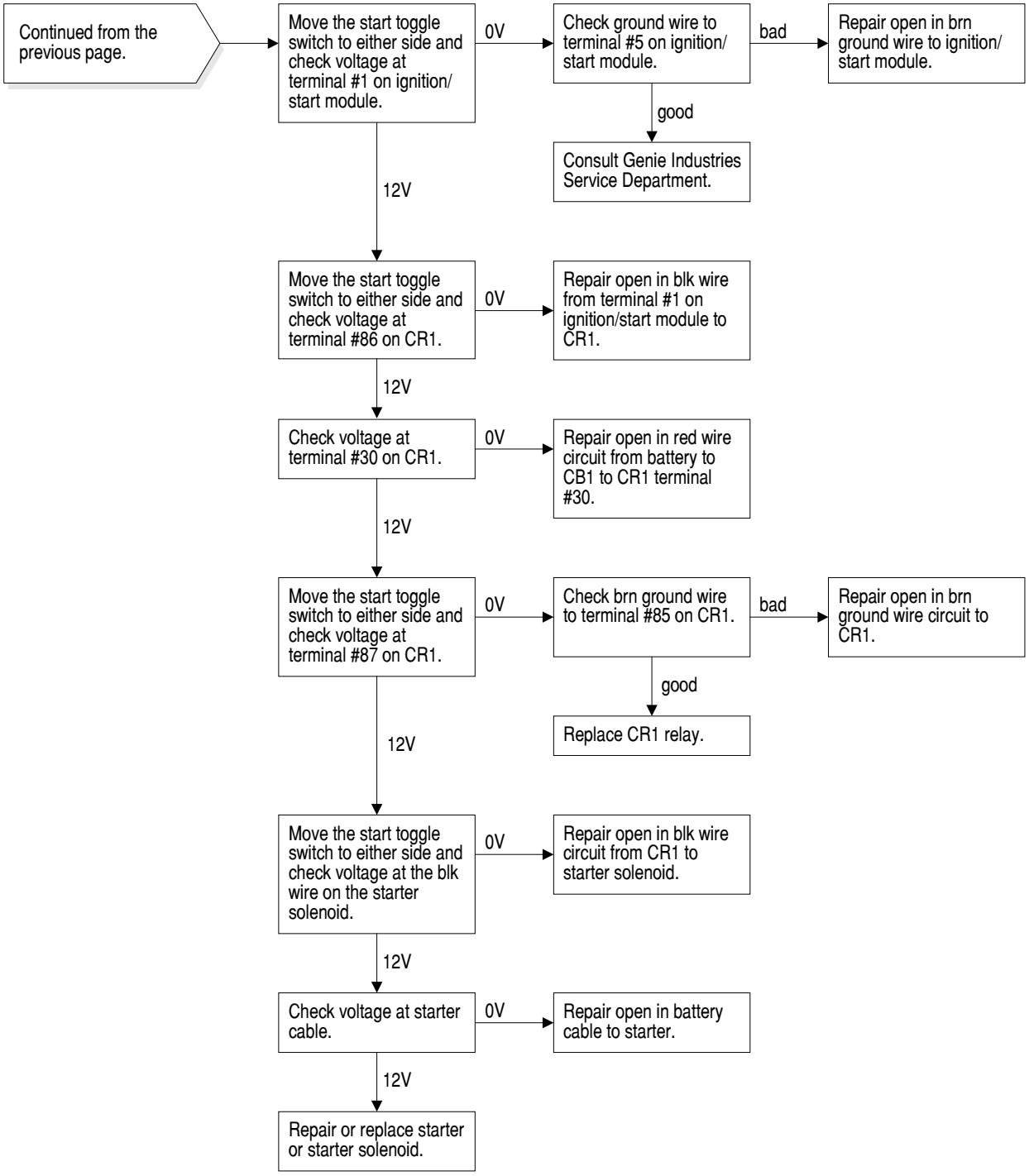

https://truckmanualshub.com/

Chart 2

Engine Cranks Over But Will Not Start - Ford Models

Be sure to check the engine oil level and fill as needed.

Be sure to check fuel levels and engine coolant level.

Be sure the gasoline shut-off valve is in the ON or OPEN position.

Perform following tests in gasoline mode only.

Be sure that the coolant temperature gauge does not show an overheated condition.

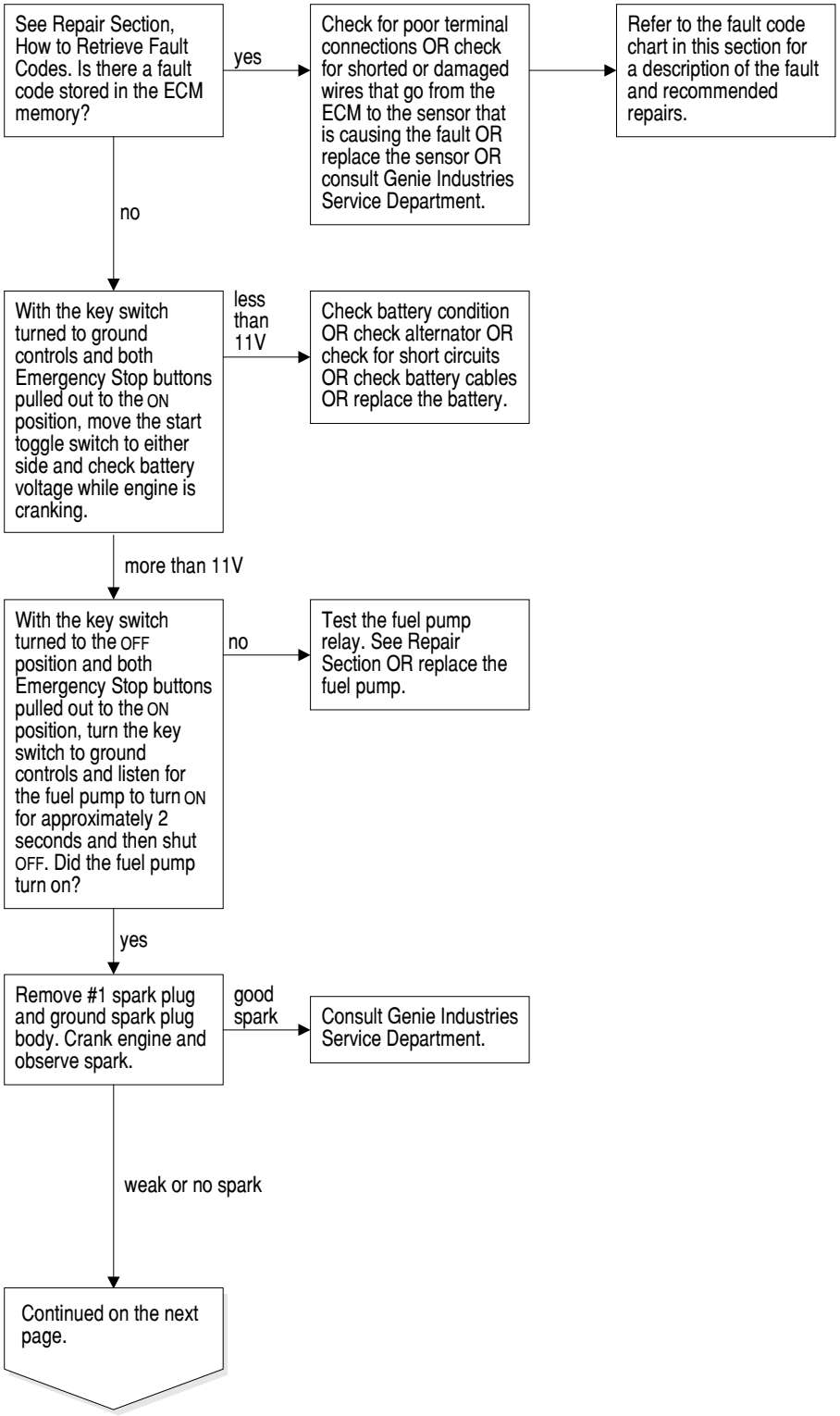

https://truckmanualshub.com/

CHART 2

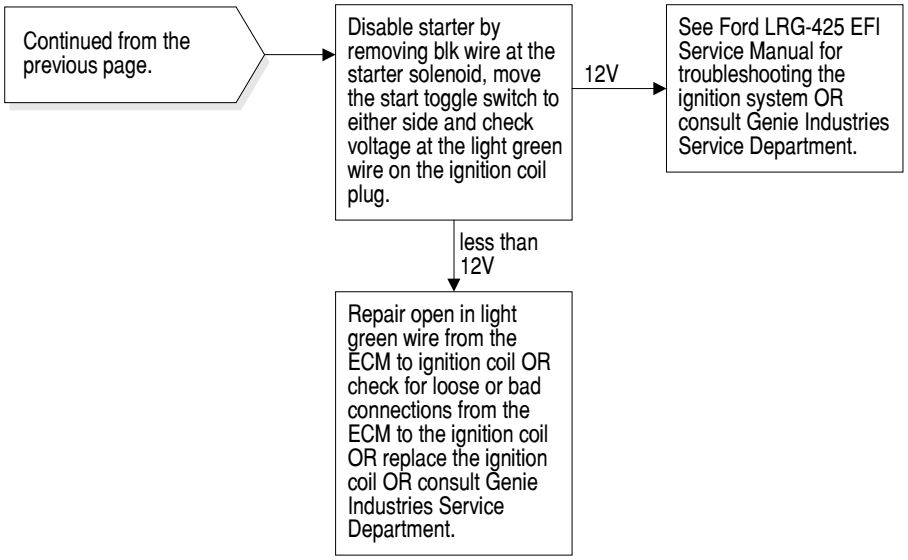

https://truckmanualshub.com/

Chart 2A

Engine Runs While Cranking Then Dies - Ford Models

Be sure to check the engine oil level and fill as needed.

Be sure to check fuel levels and the engine coolant level.

Be sure that the radiator overflow tank is at the FULL mark.

Perform these tests in gasoline mode only.

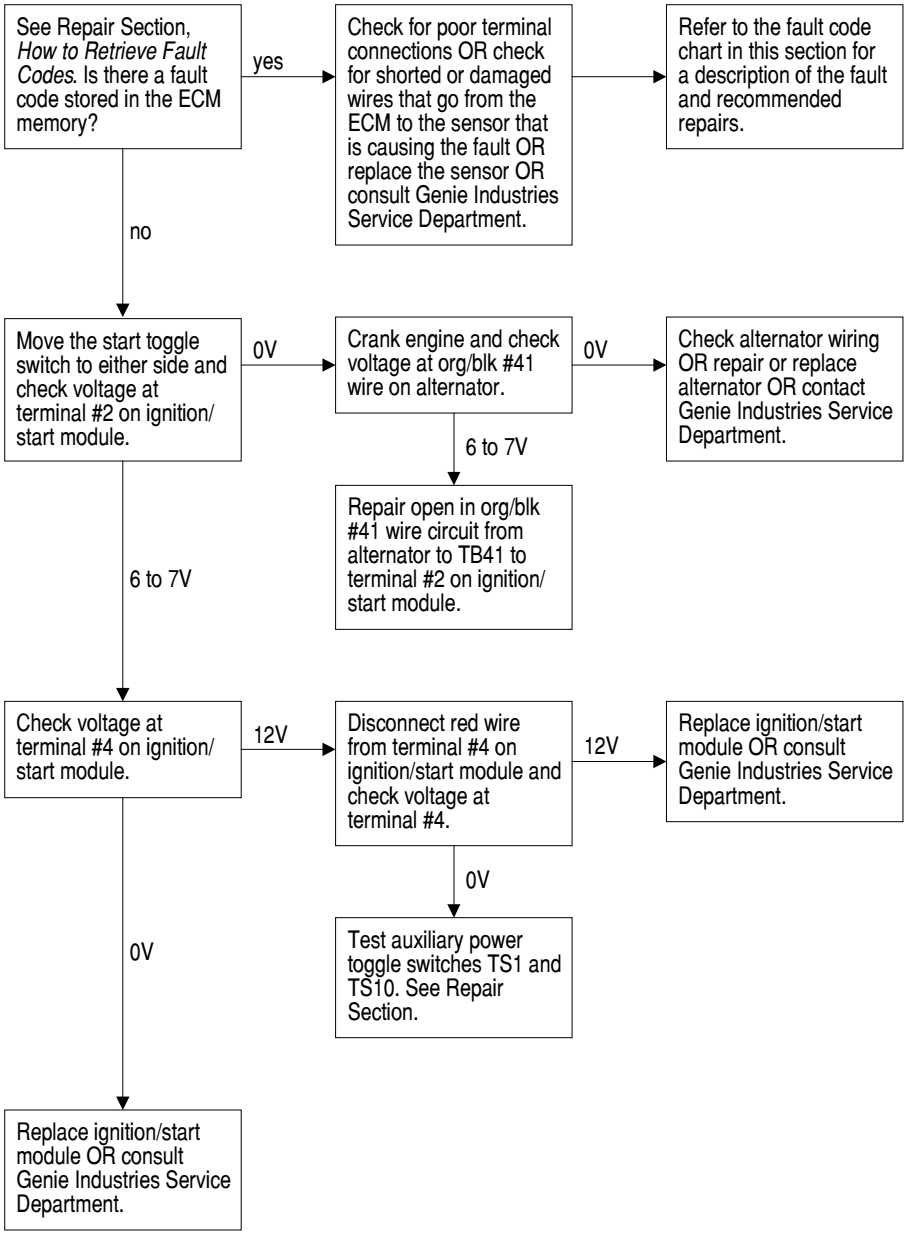

https://truckmanualshub.com/

Chart 3

Engine Cranks Over But Will Not Start - Diesel Models

Be sure to check the engine oil level and fill as needed.

Be sure to check fuel level.

Be sure the fuel shut-off valve is in the ON position.

Be sure that the battery is fully charged.

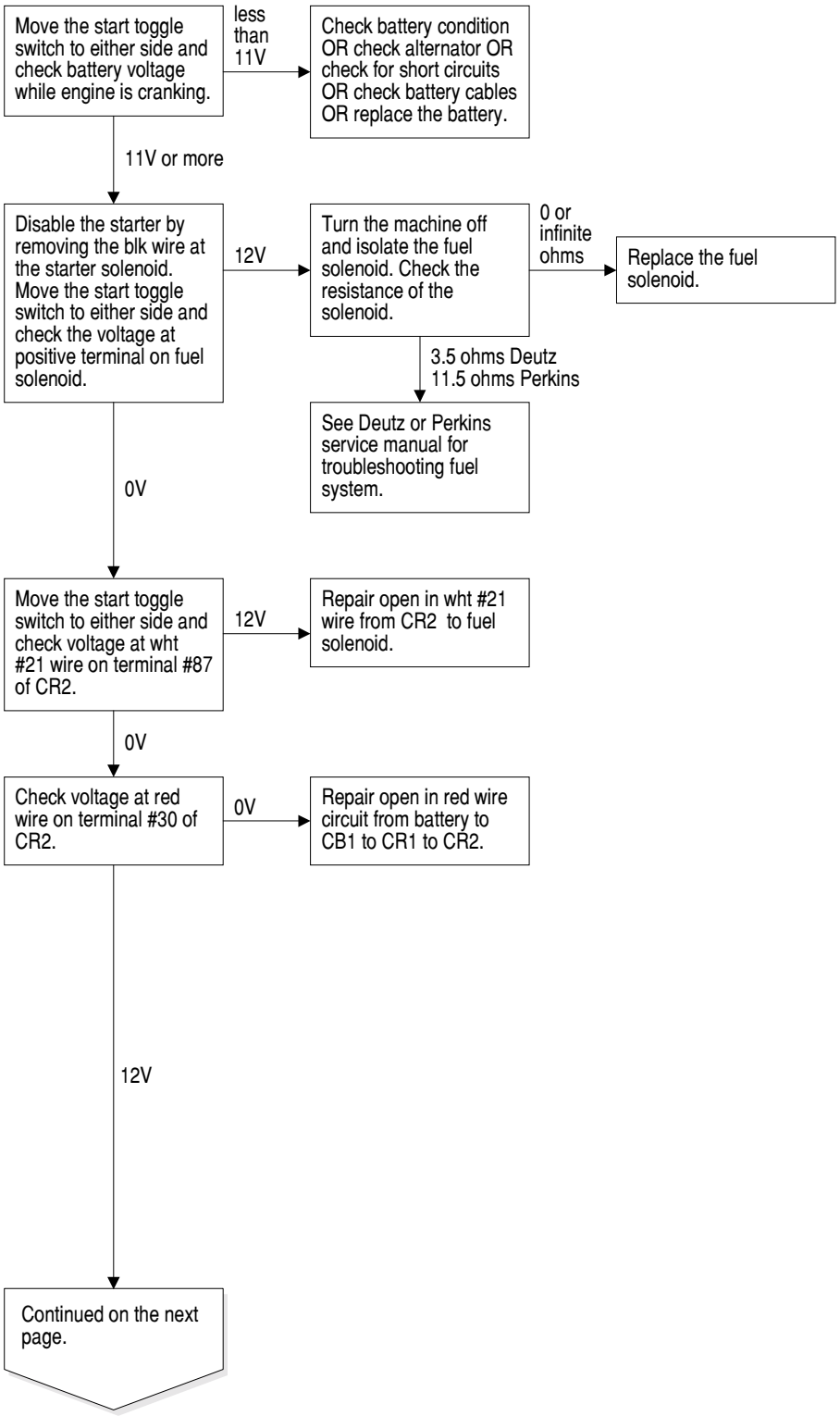

https://truckmanualshub.com/

CHART 3

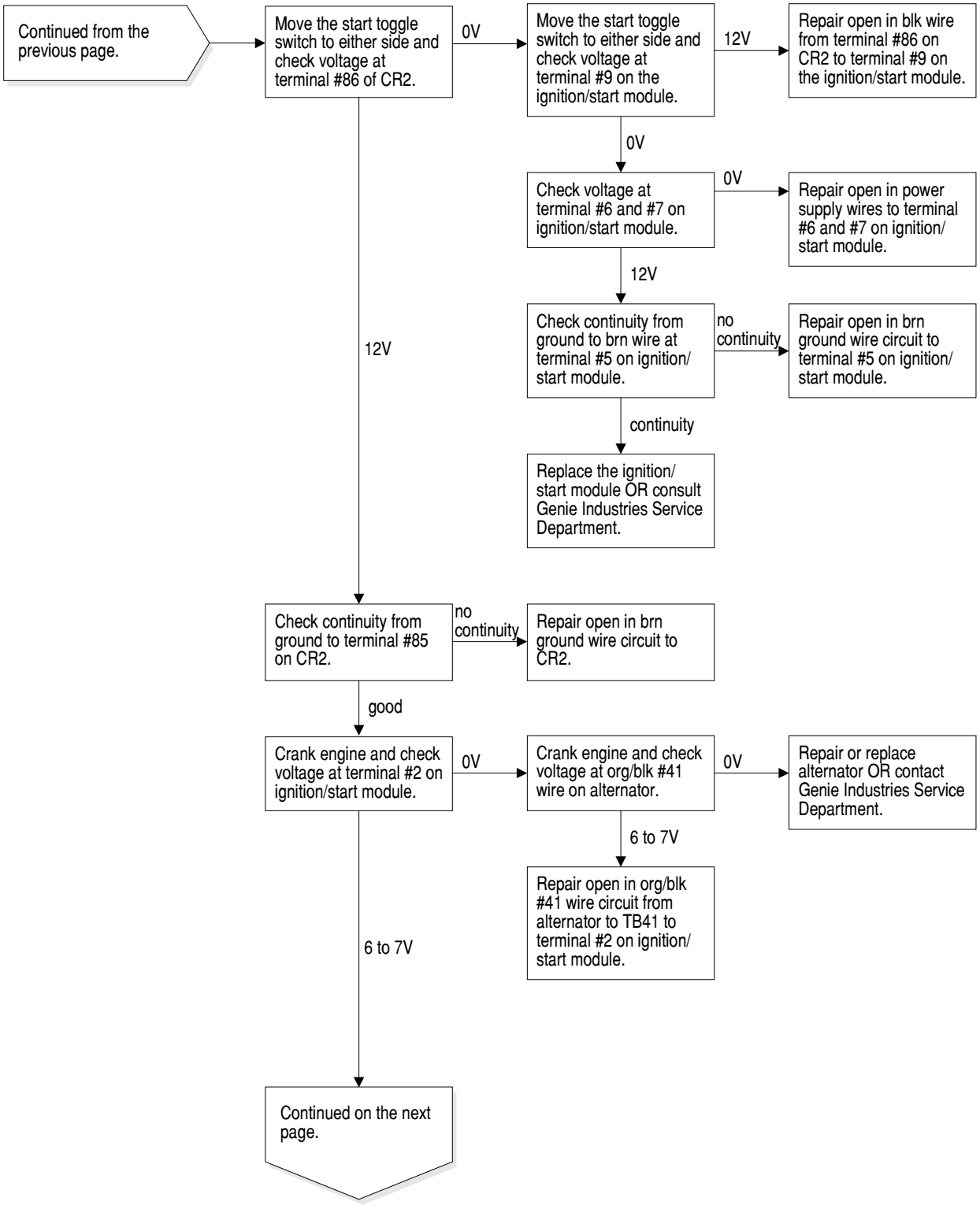

https://truckmanualshub.com/

CHART 3

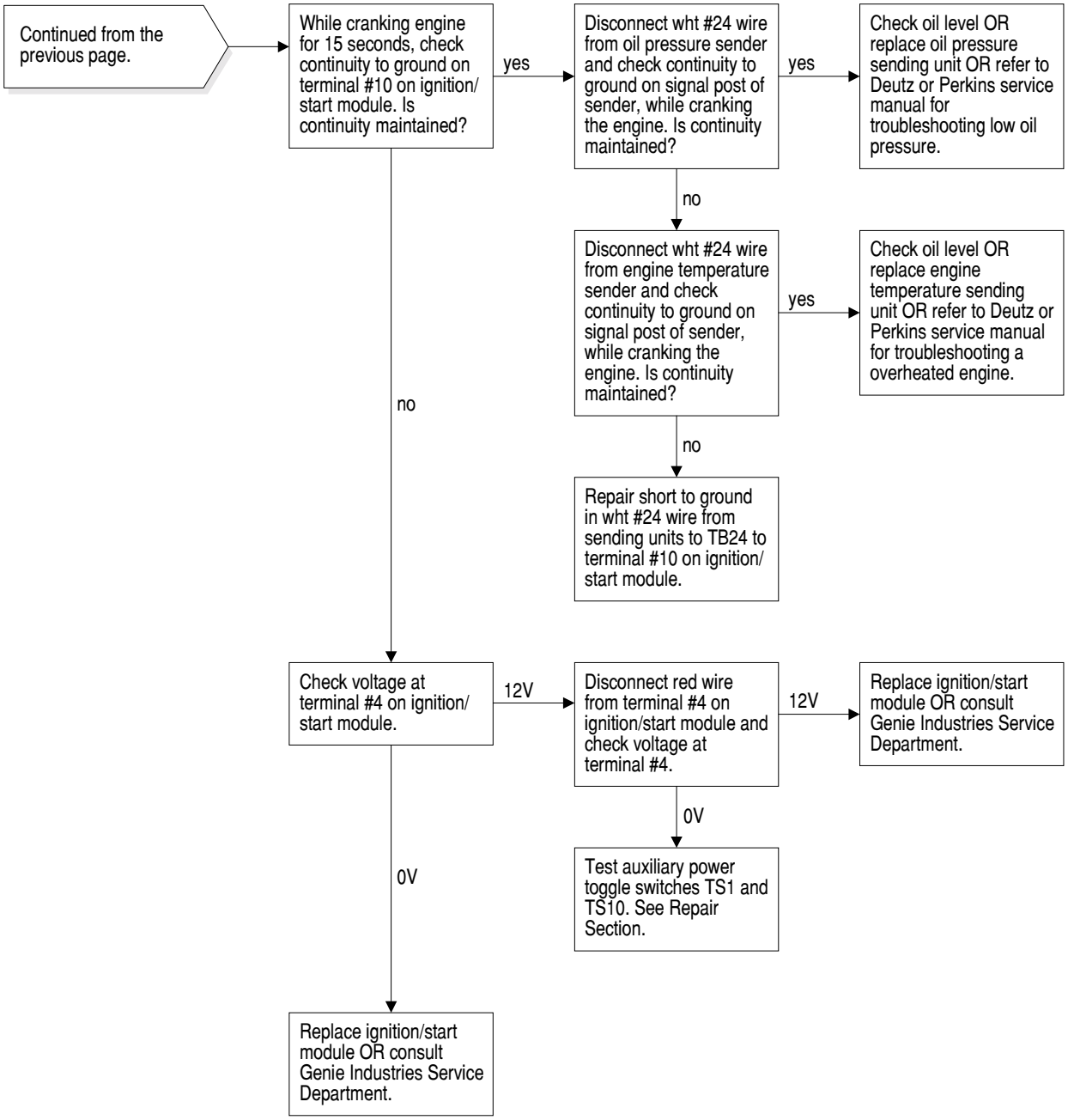

https://truckmanualshub.com/

Chart 4

Engine Will Not Start On LPG, But Will Start On Gasoline - Ford Models

Be sure fuel select switch is switched to LPG.

Be sure the valve on the LPG tank is fully opened.

Be sure to check LPG fuel level.

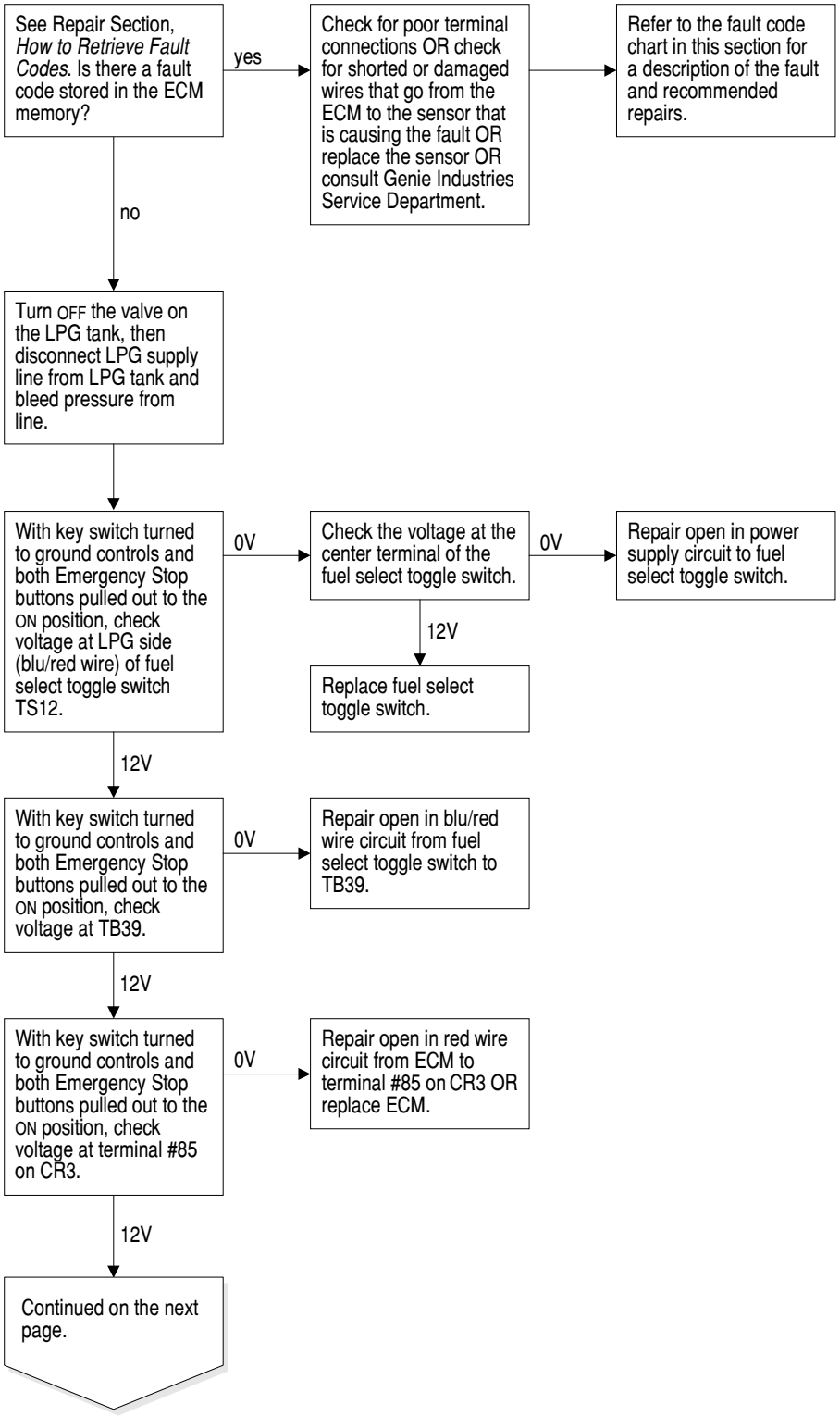

https://truckmanualshub.com/

CHART 4

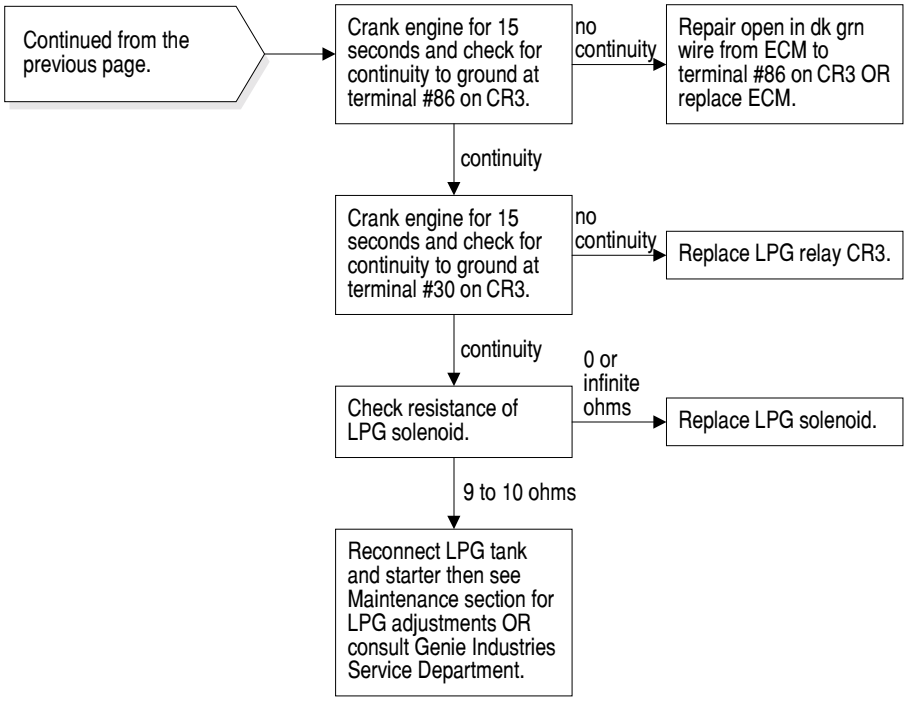

https://truckmanualshub.com/

Chart 5

Engine Will Not Start On Gasoline, But Will Start On LPG - Ford Models

Be sure fuel select switch is switched to gasoline.

Be sure to check gasoline fuel level.

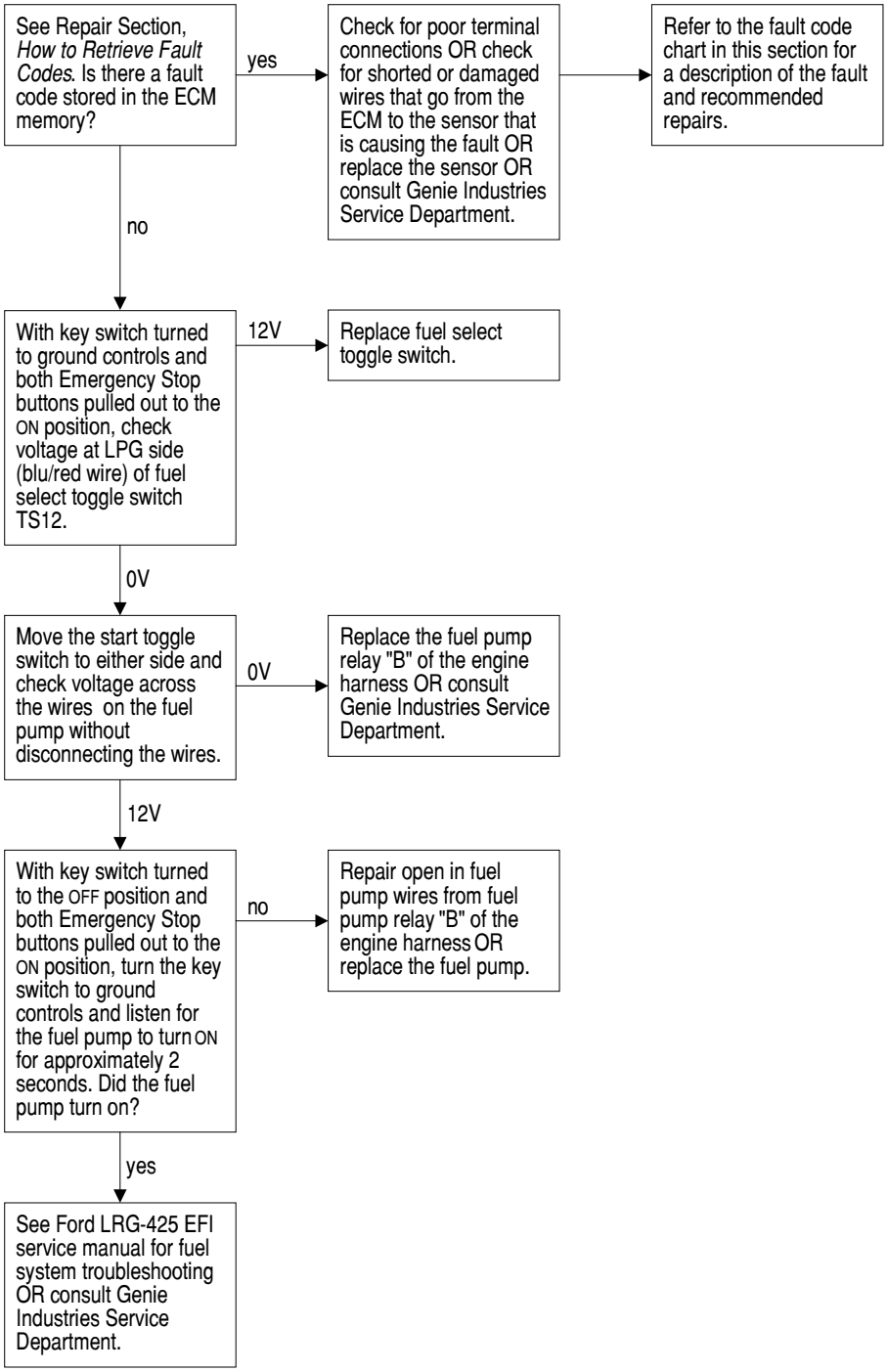

https://truckmanualshub.com/

Chart 6

Engine High Idle Inoperative - Ford Models

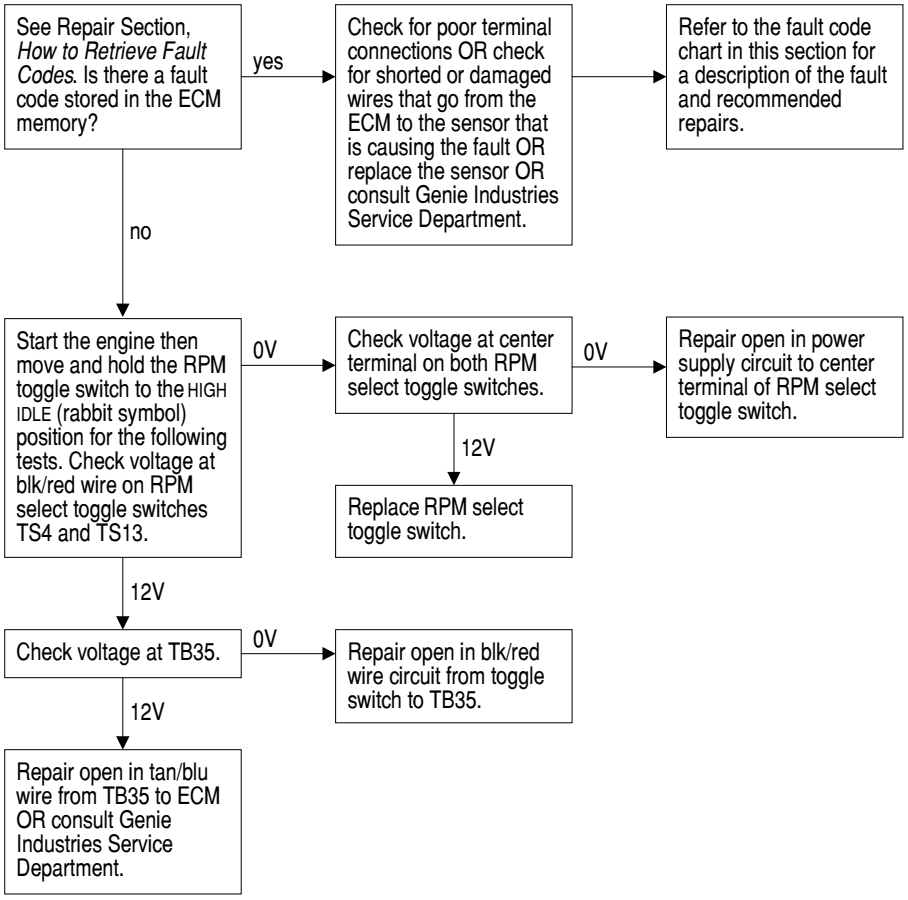

https://truckmanualshub.com/

Chart 7

Engine Low Idle Inoperative - Ford Models

If low idle operates on LPG but not on gasoline, see Ford service manual for troubleshooting.

If low idle operates on gasoline but not on LPG, see Ford service manual for troubleshooting.

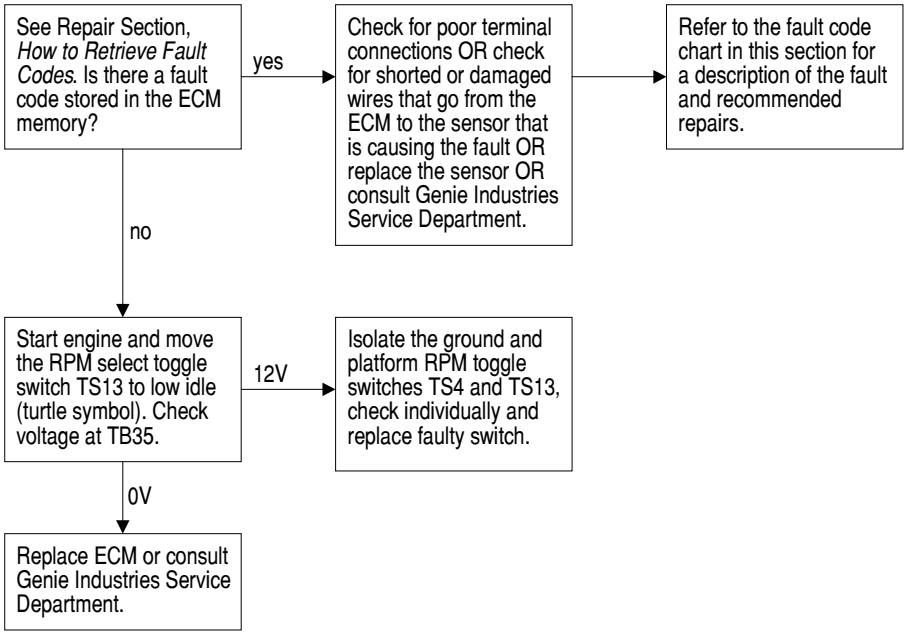

https://truckmanualshub.com/

Chart 8

Engine High Idle Inoperative - Diesel Models

Be sure mechanical linkage is not binding or defective.

Be sure 2-speed solenoid grounding wires are free of corrosion and have full continuity to ground.

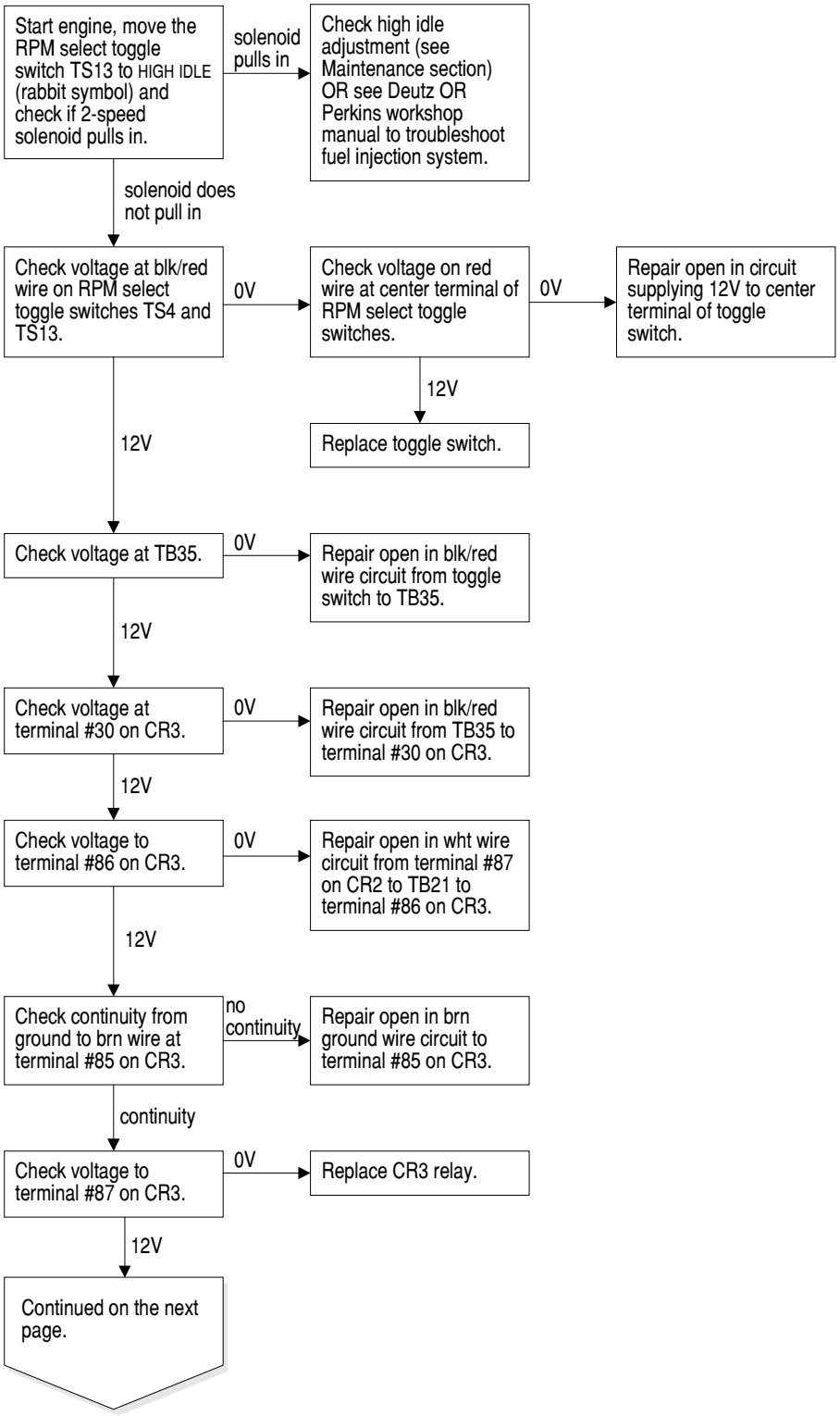

https://truckmanualshub.com/

CHART 8

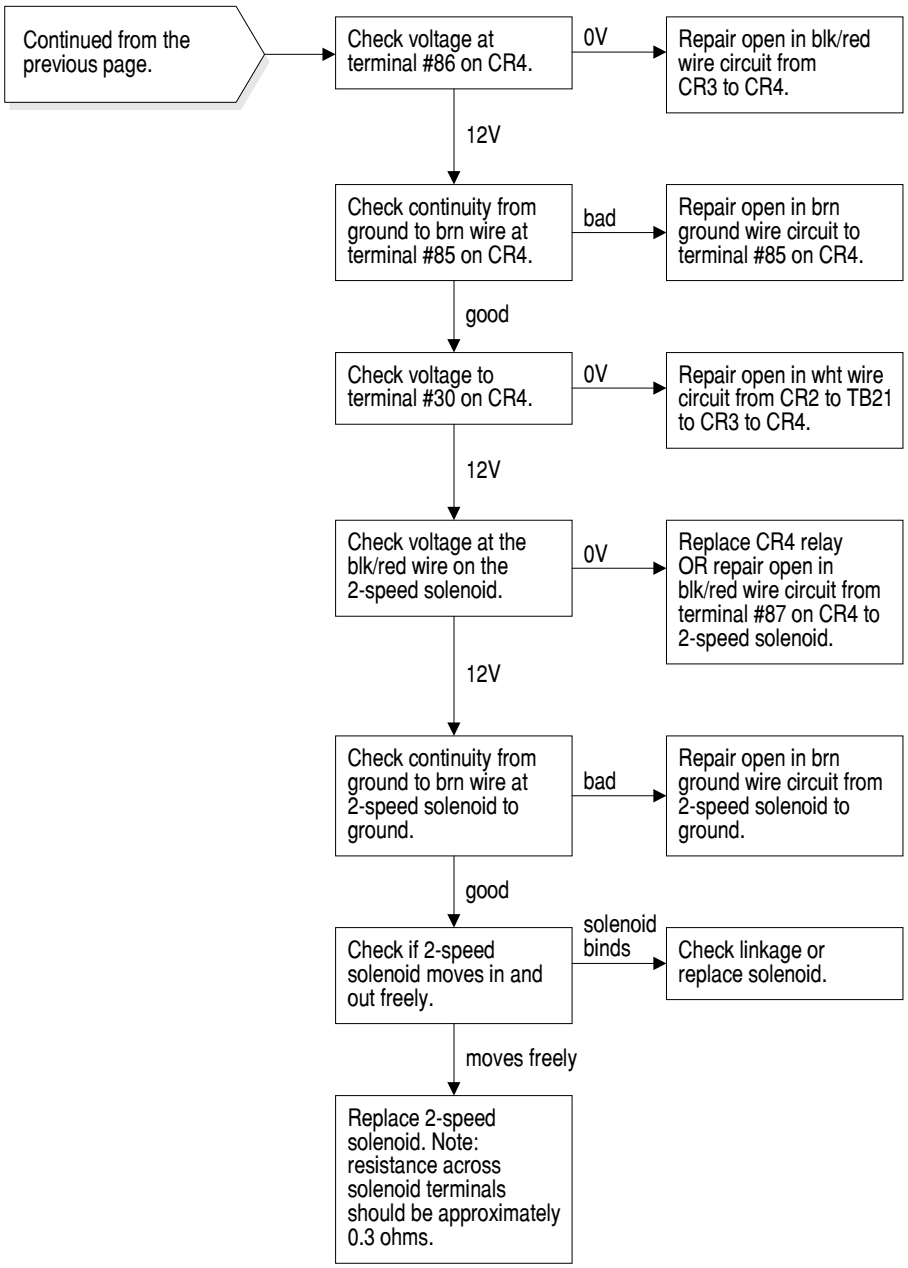

https://truckmanualshub.com/

Chart 9

Engine Low Idle Inoperative - Diesel Models

Check if mechanical linkage from 2-speed solenoid to fuel injection system is binding or defective.

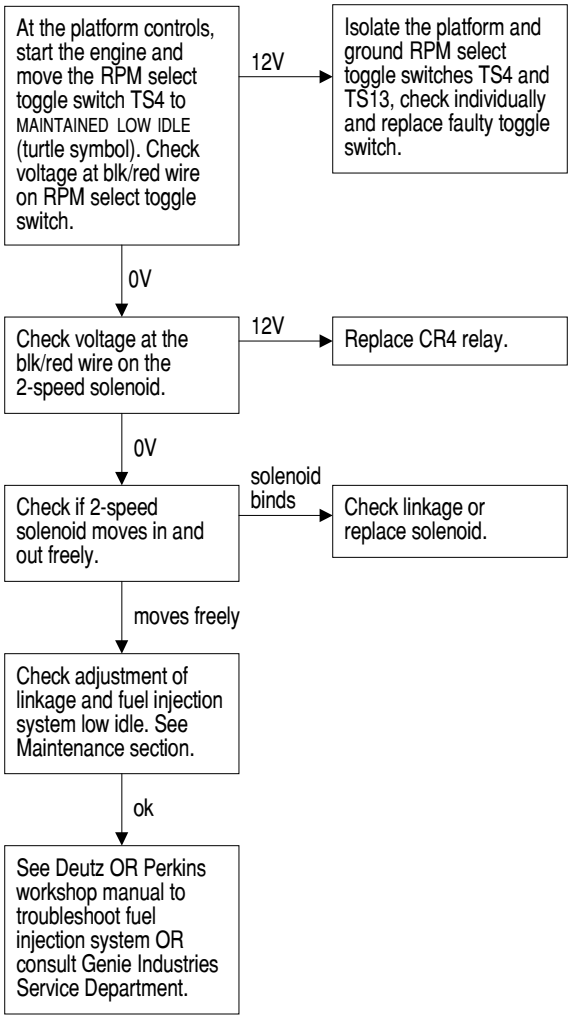

https://truckmanualshub.com/

Chart 10

All Functions Inoperative, Engine Starts and Runs

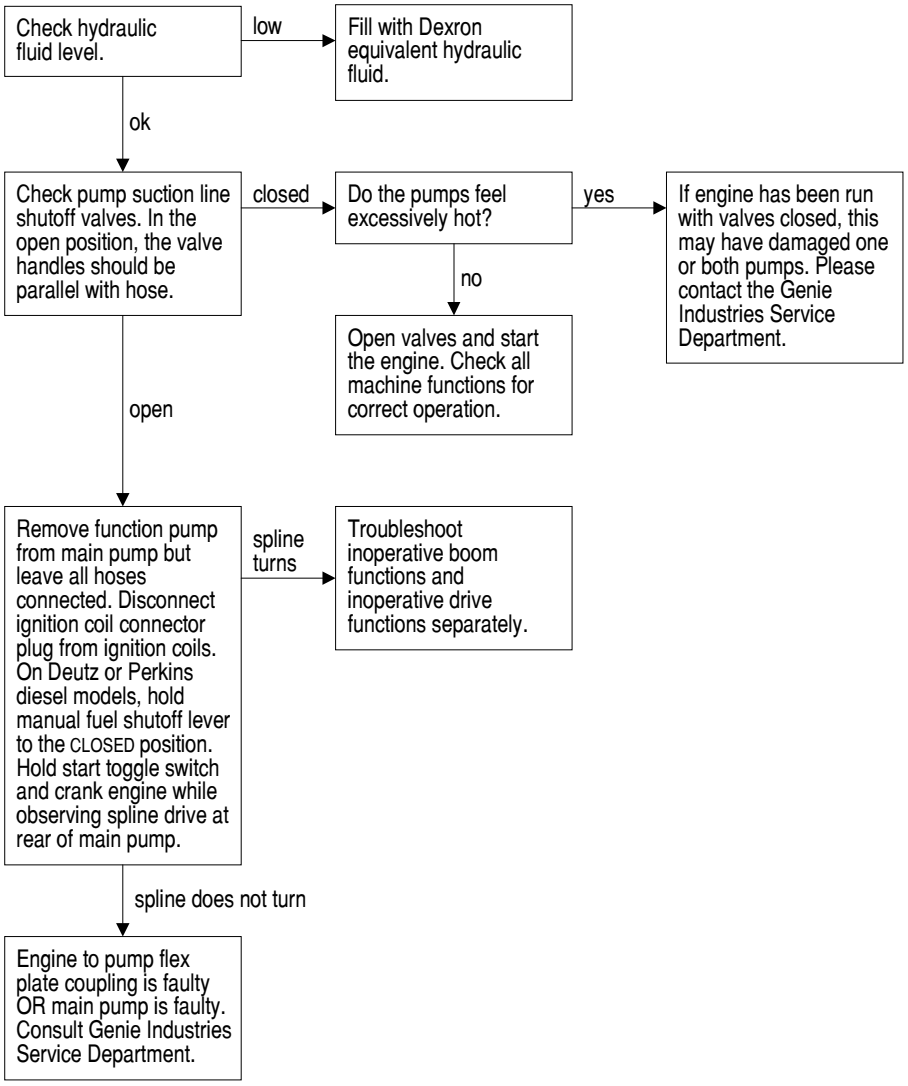

https://truckmanualshub.com/

Chart 11

All Lift and Steer Functions Inoperative, Drive Functions Operational

Be sure the generator on/off toggle switch (if equipped) is in the OFF position.

Be sure the hydraulic suction line shutoff valve for the lift/steer pump is in the OPEN position.

Be sure all grounding wires for the hydraulic manifold valves are free of corrosion and have full continuity to ground.

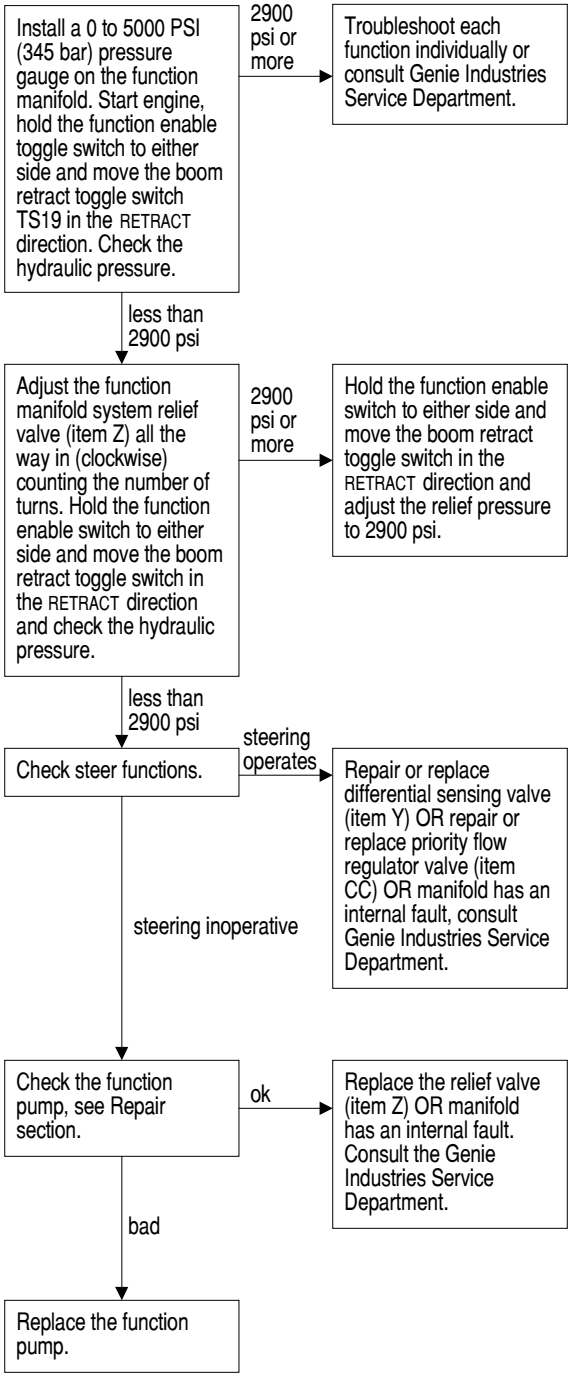

https://truckmanualshub.com/

Chart 12

Ground Controls Inoperative, Platform Controls Operate Normally

Be sure all other functions operate normally, including the platform controls.

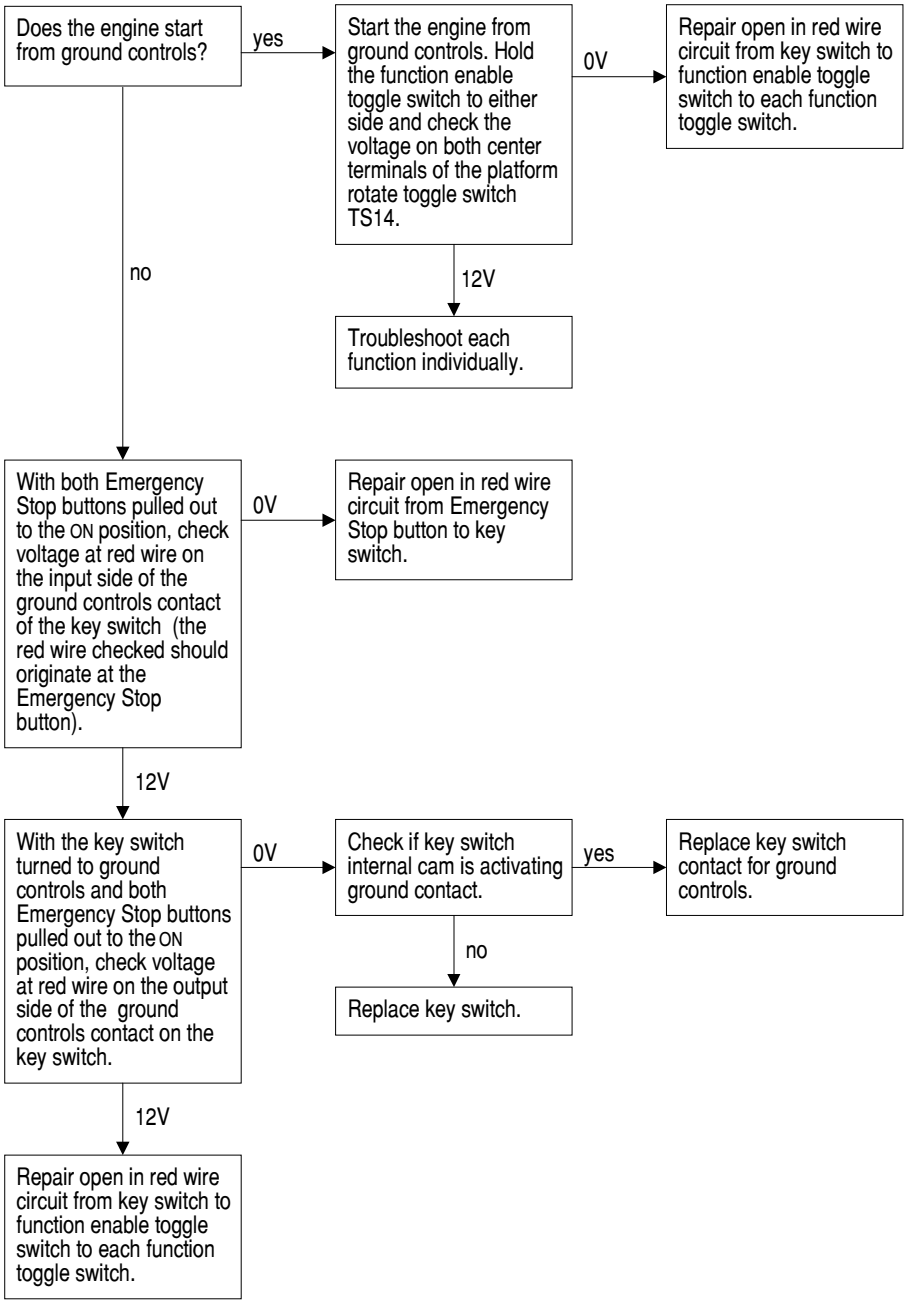

https://truckmanualshub.com/

Chart 13

Platform Controls Inoperative, Ground Controls Operate Normally

Be sure all cables from chassis through the cable track are in good condition with no kinks or abrasions.

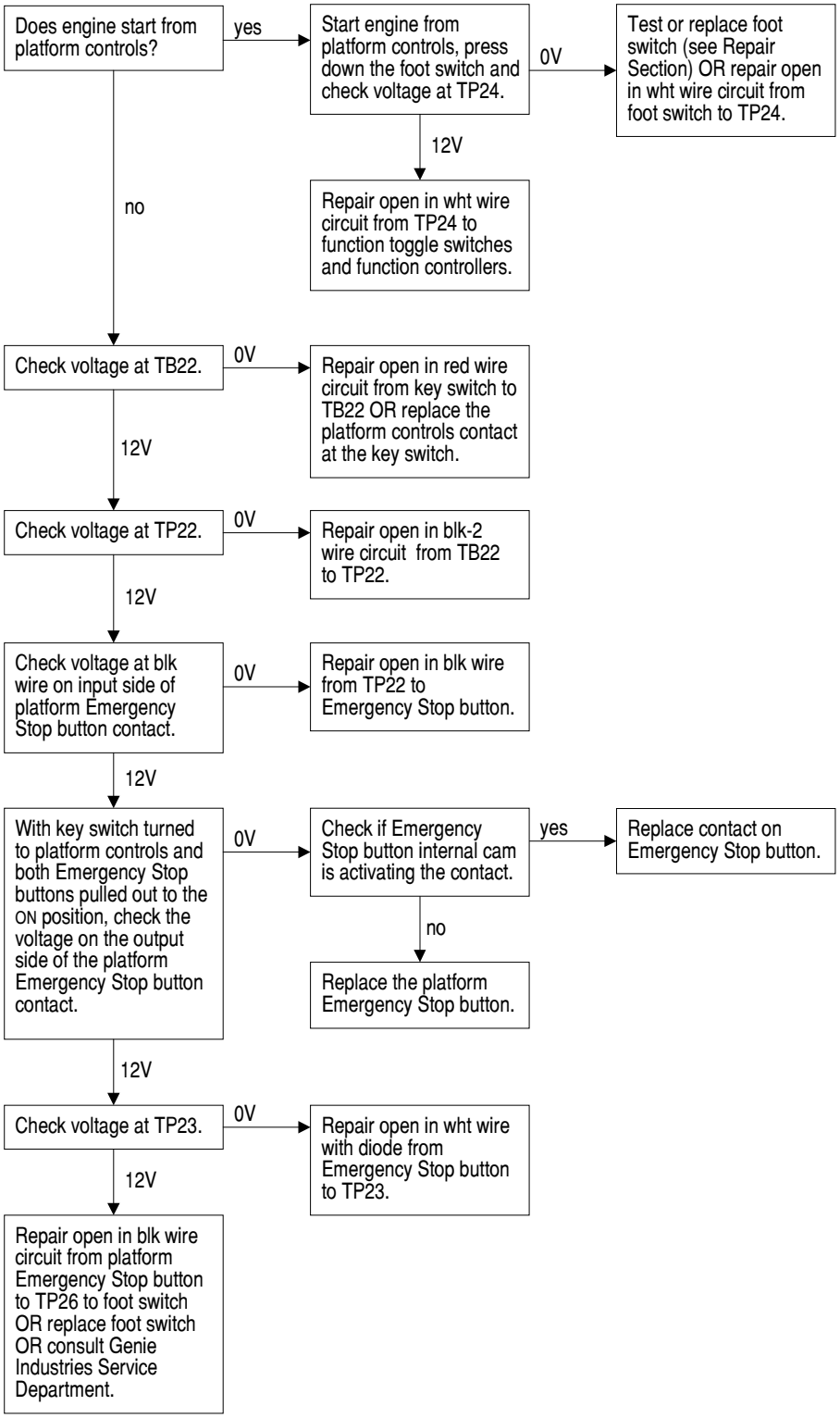

https://truckmanualshub.com/

Chart 14

Boom Up Function Inoperative

Be sure all other functions operate normally.

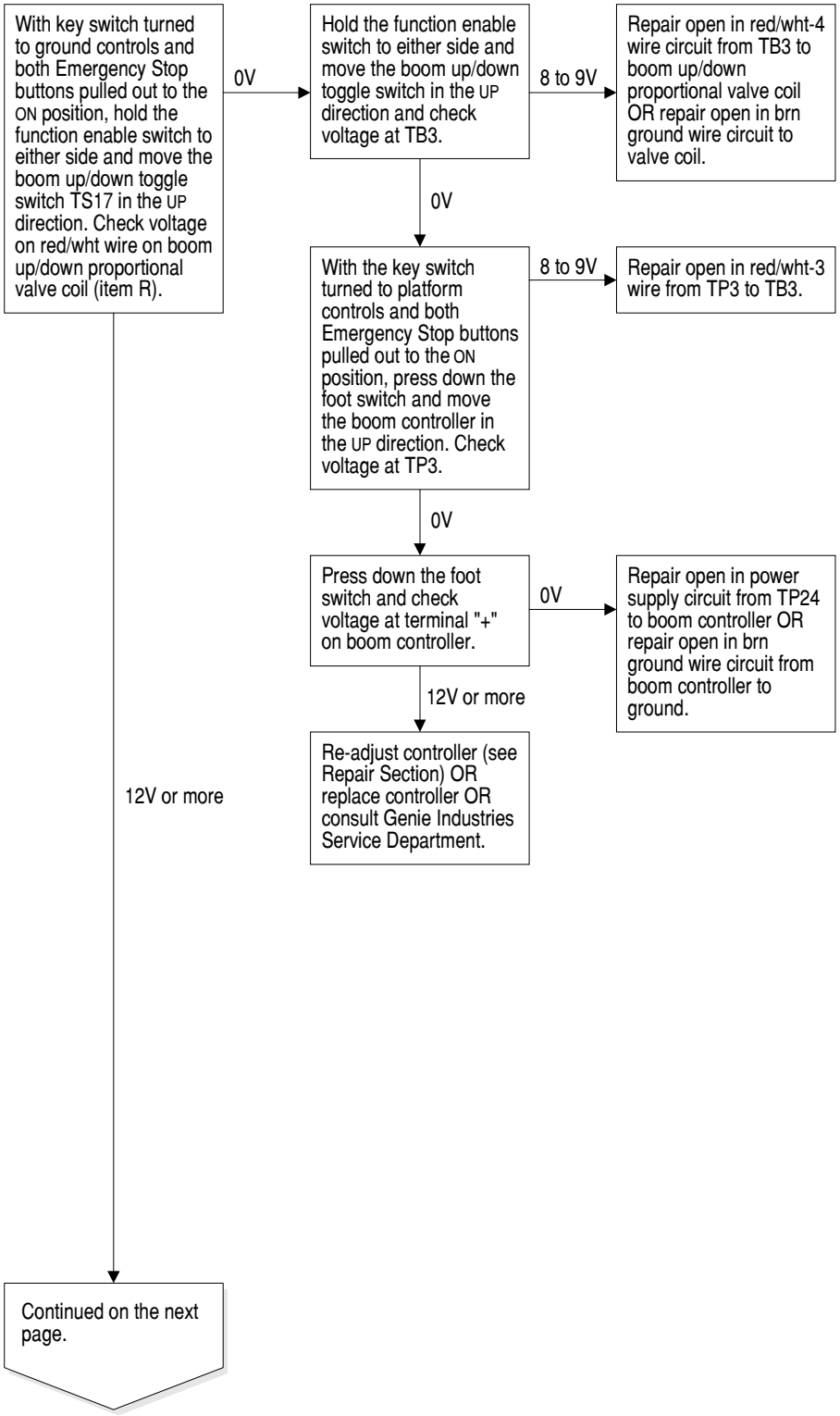

https://truckmanualshub.com/

CHART 14

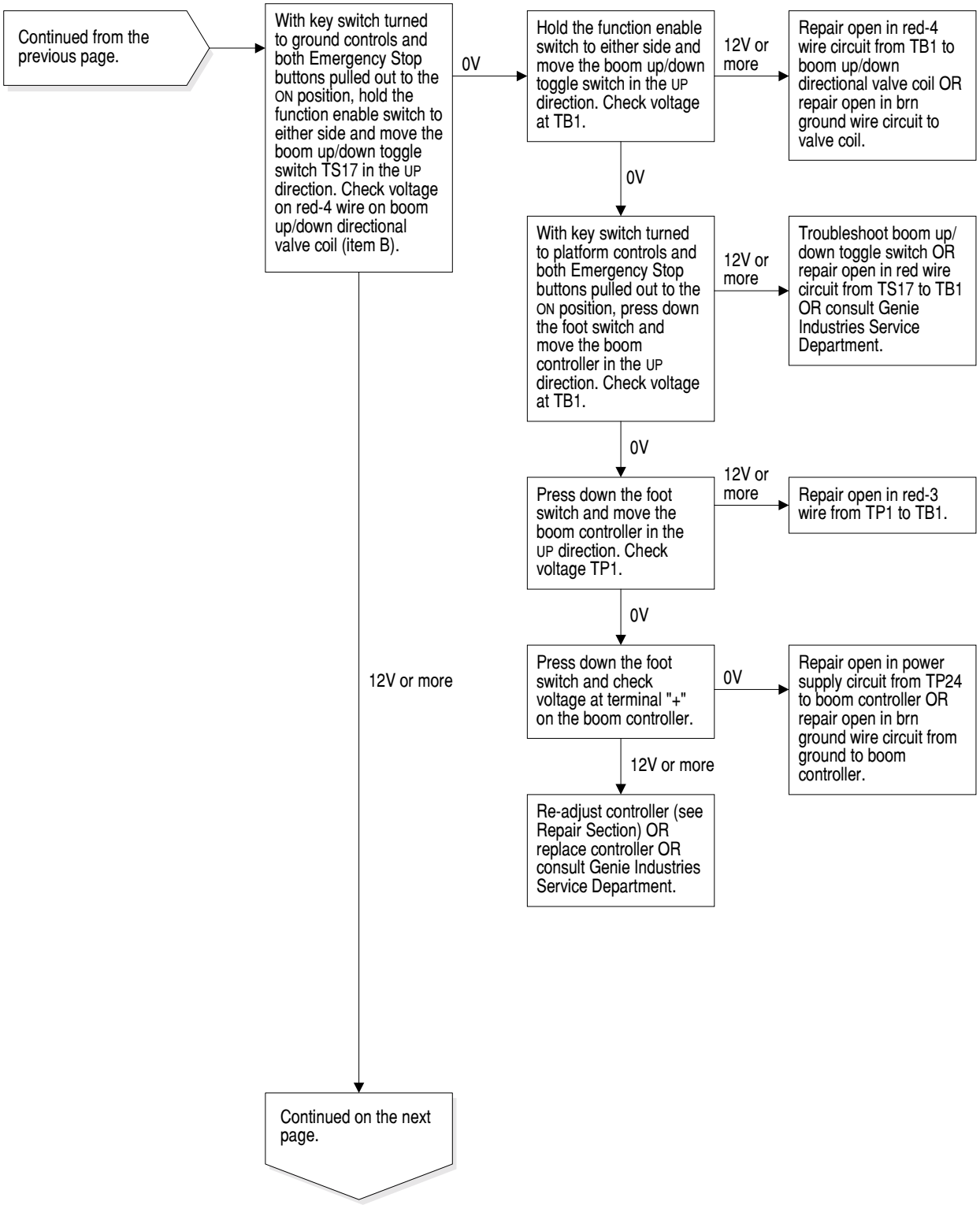

https://truckmanualshub.com/

CHART 14

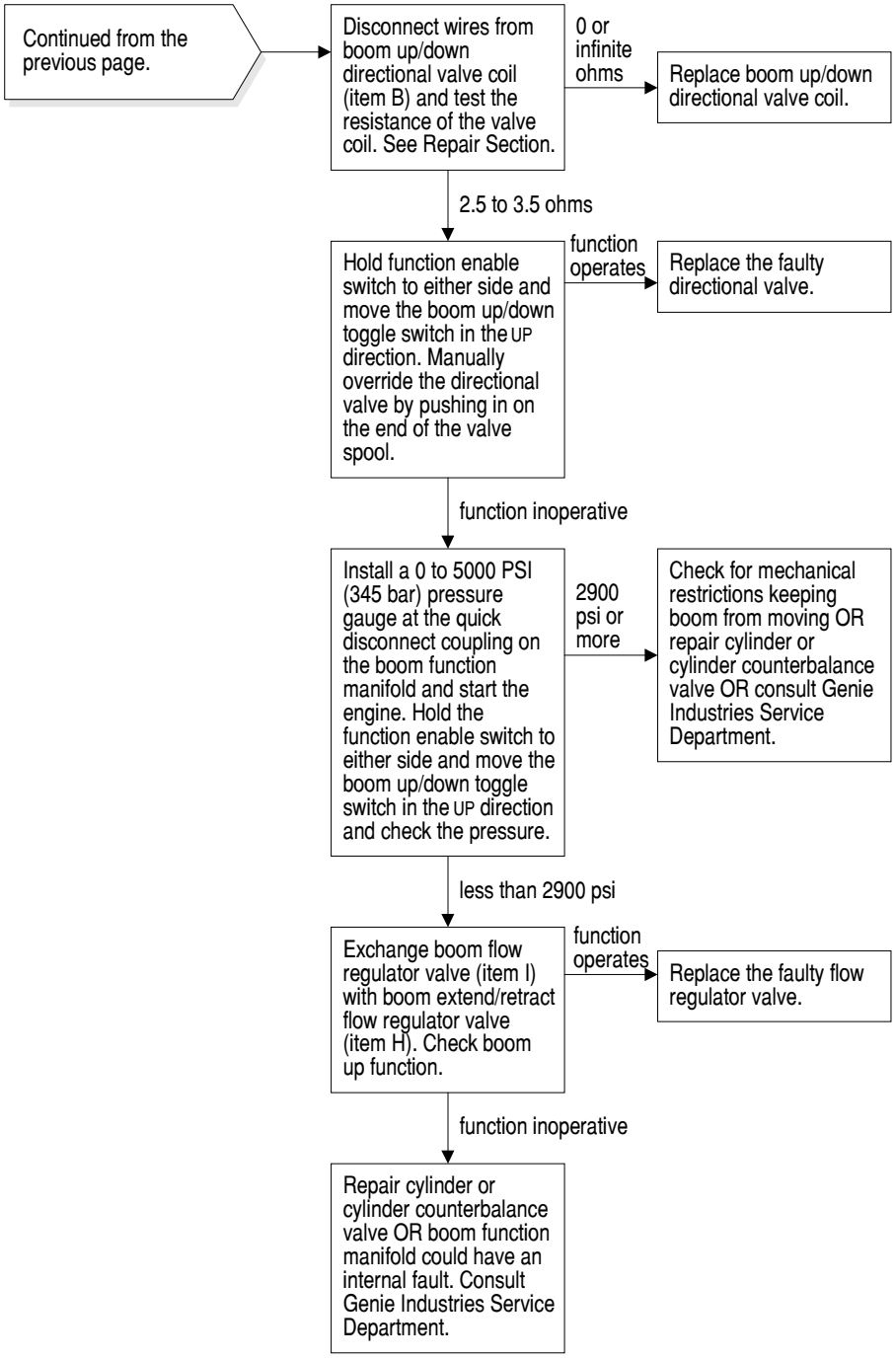

https://truckmanualshub.com/

Chart 15

Boom Down Function Inoperative

Be sure all other functions operate normally.

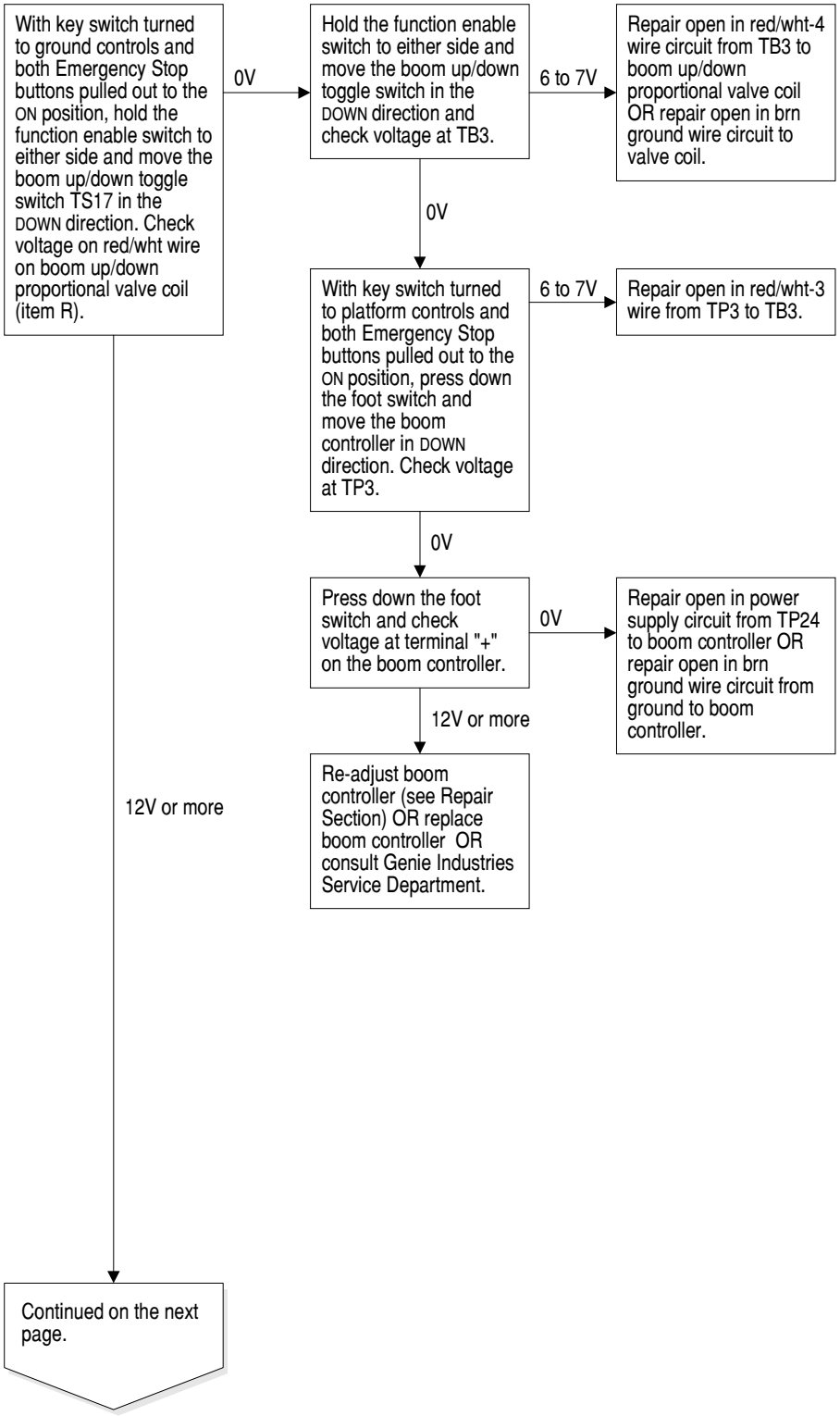

https://truckmanualshub.com/

CHART 15

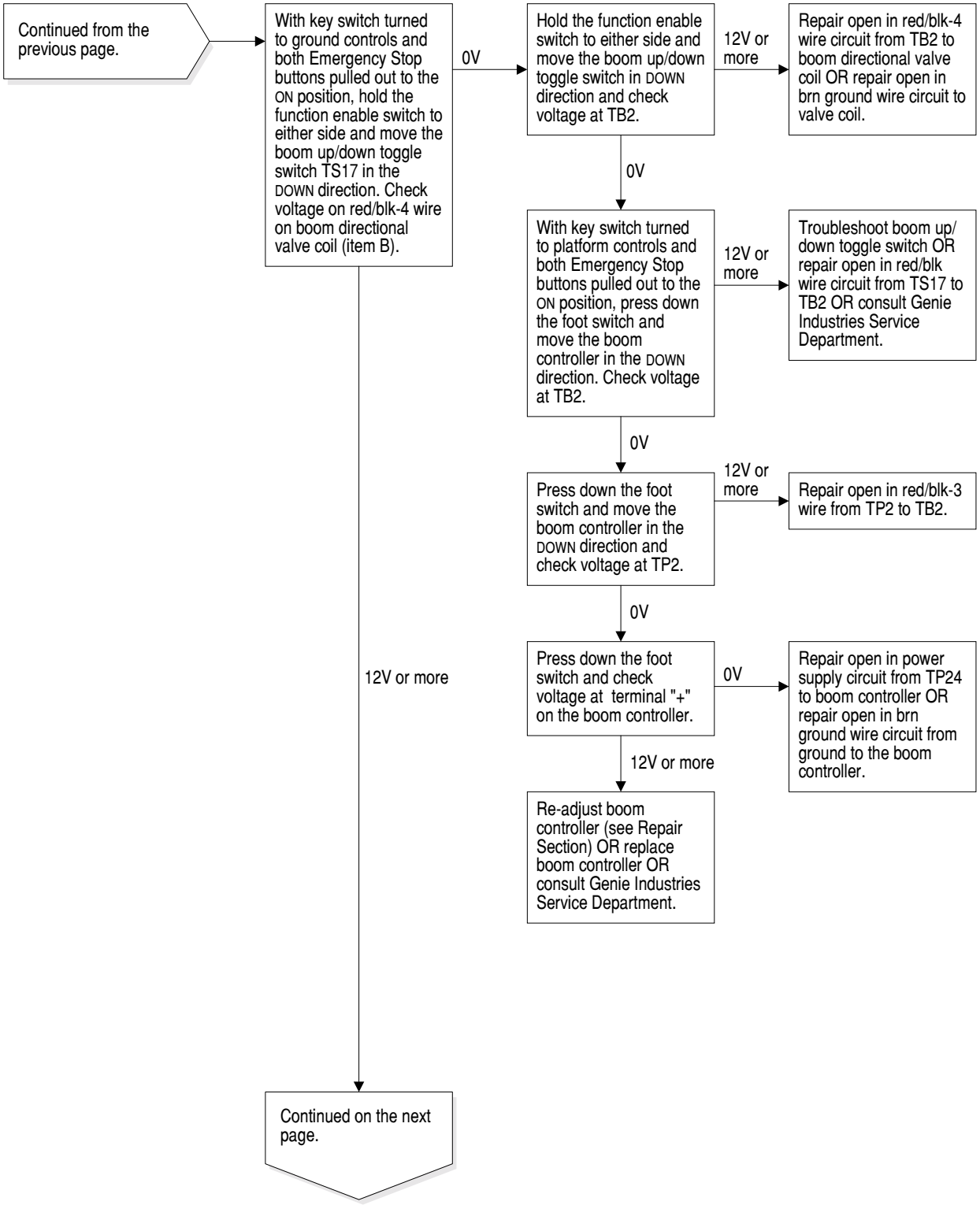

https://truckmanualshub.com/

CHART 15

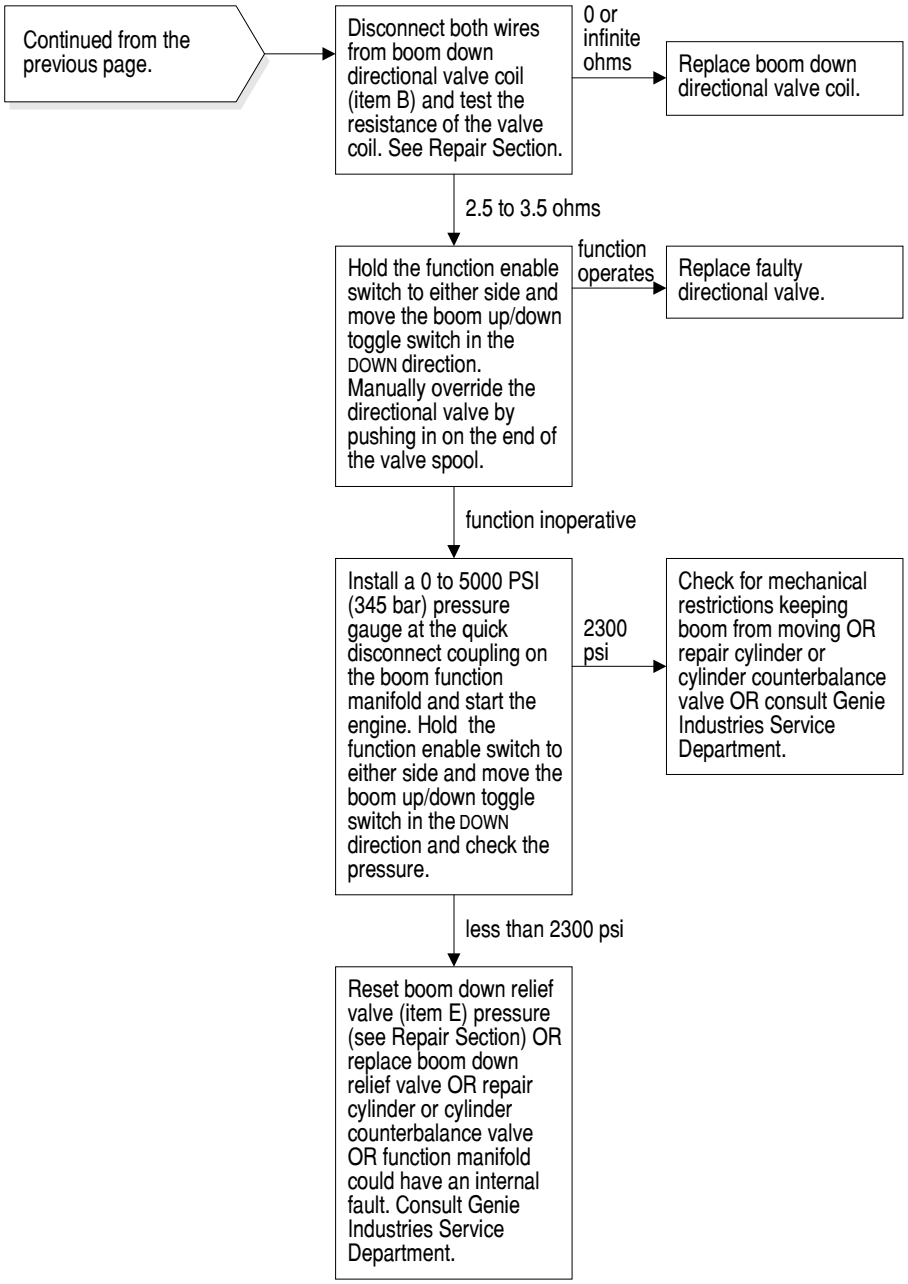

https://truckmanualshub.com/

Chart 16

Boom Extend Function Inoperative

Be sure all other functions operate normally.

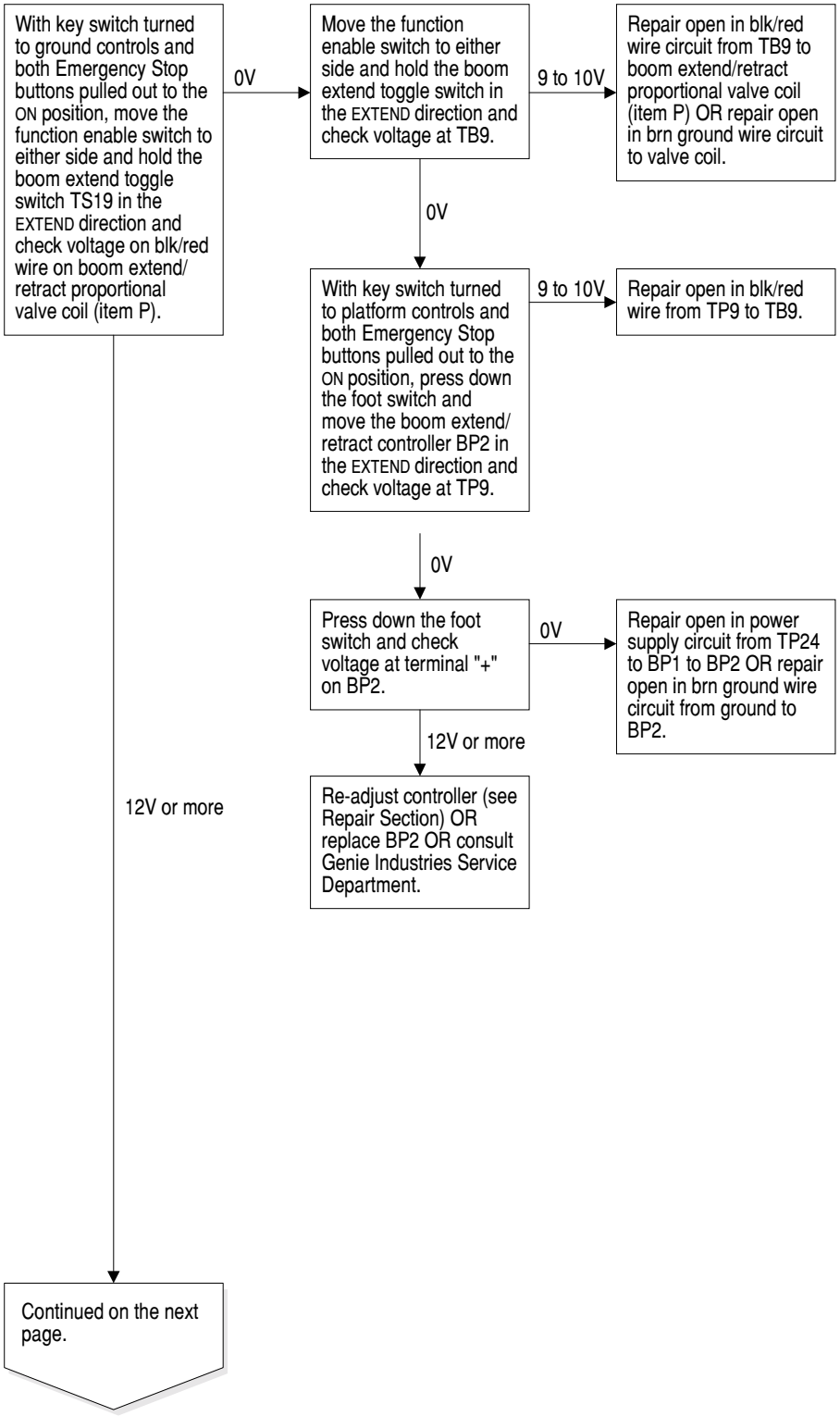

https://truckmanualshub.com/

CHART 16

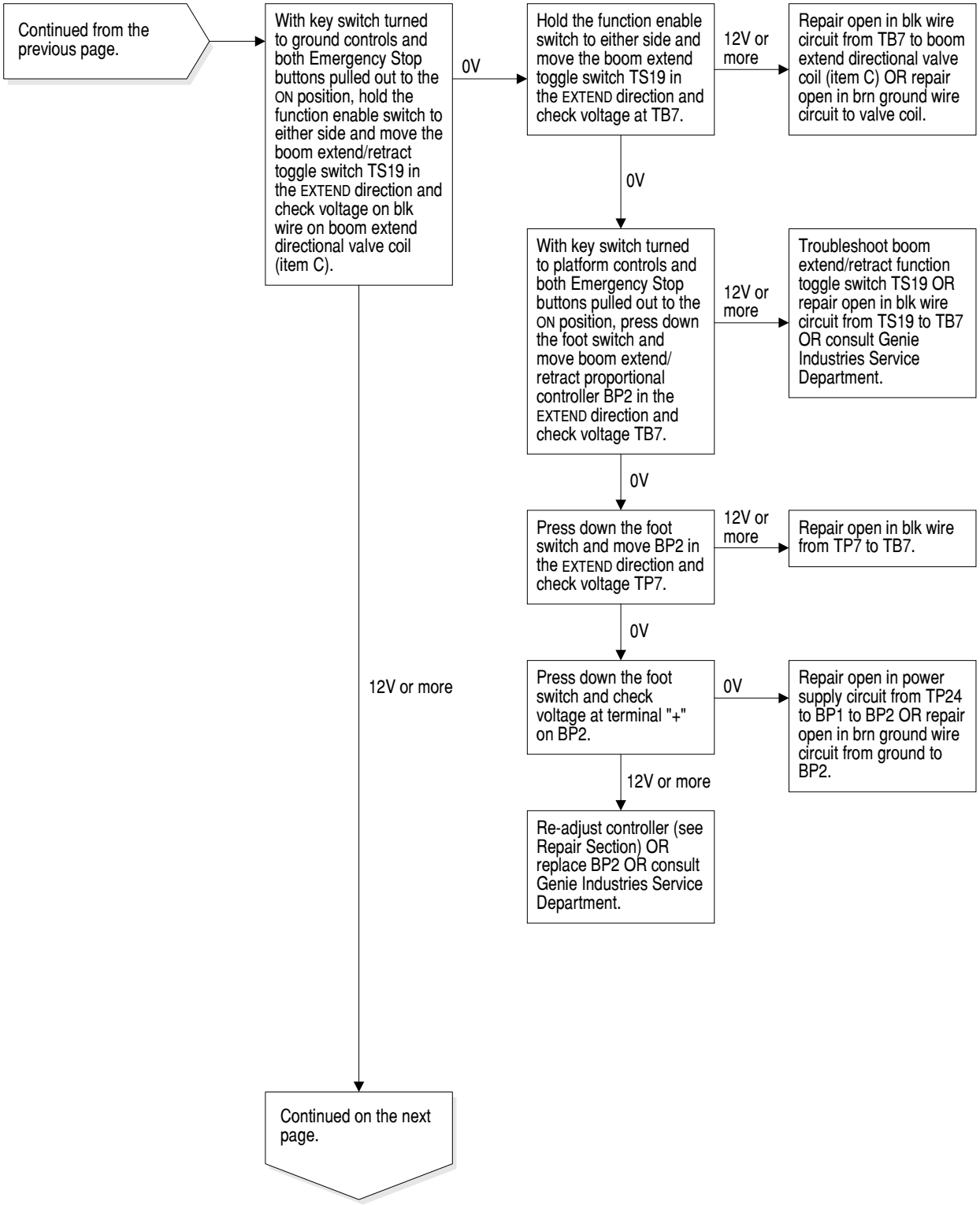

https://truckmanualshub.com/

CHART 16

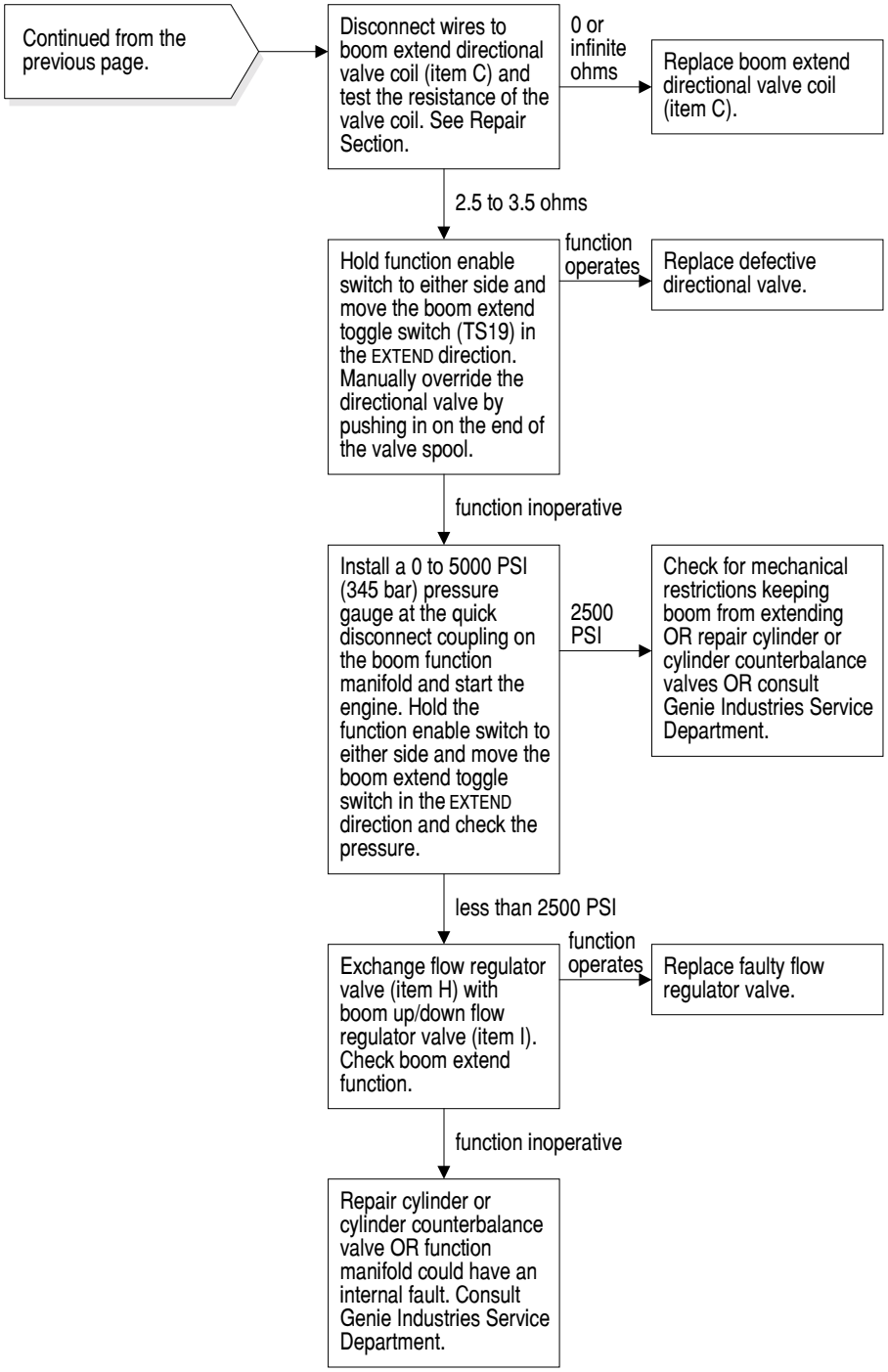

https://truckmanualshub.com/

Chart 17

Boom Retract Function Inoperative

Be sure all other functions operate normally.

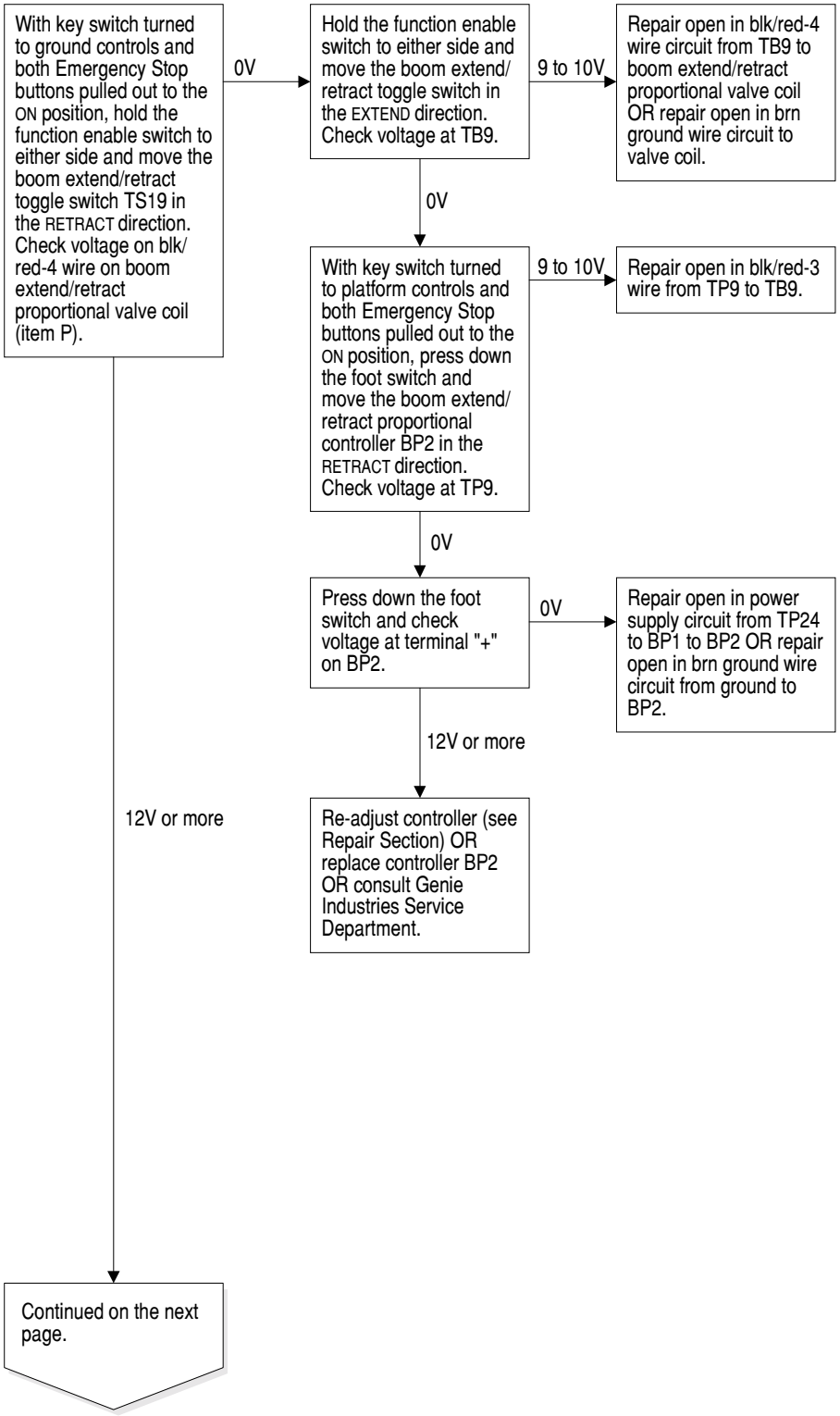

https://truckmanualshub.com/

CHART 17

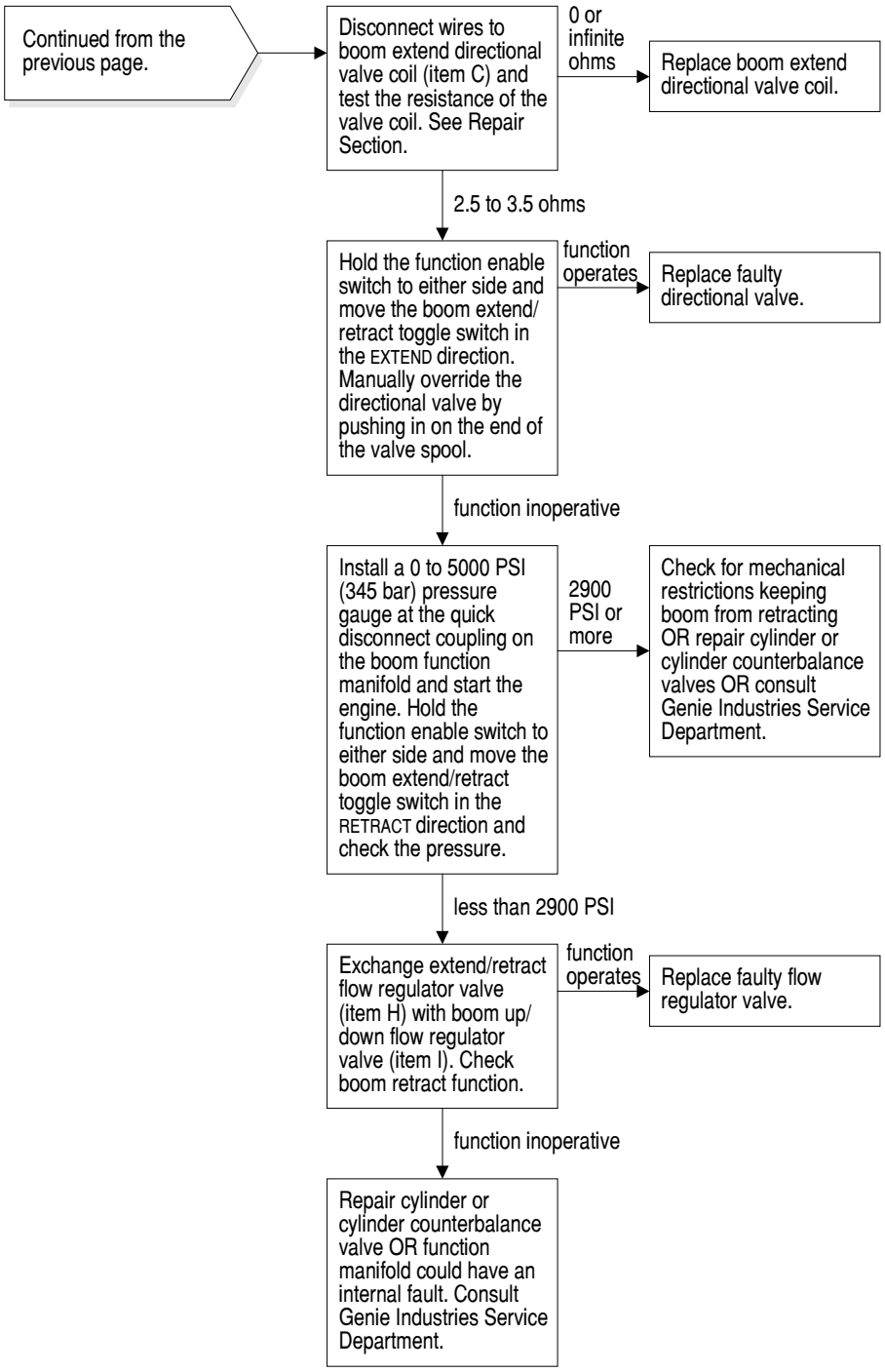

https://truckmanualshub.com/

Chart 18

Turntable Rotate Left Function Inoperative

Be sure all other functions operate normally.

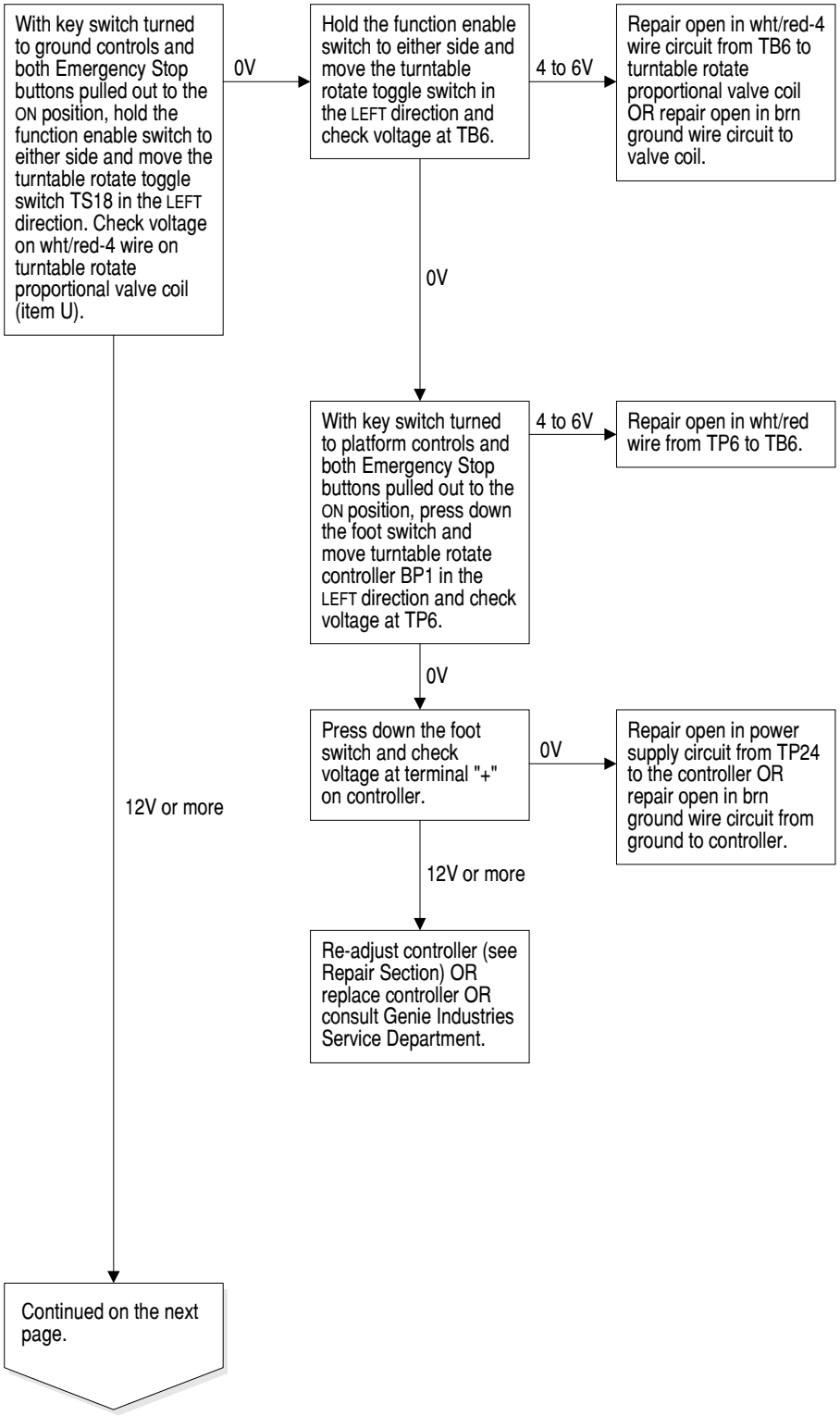

https://truckmanualshub.com/

CHART 18

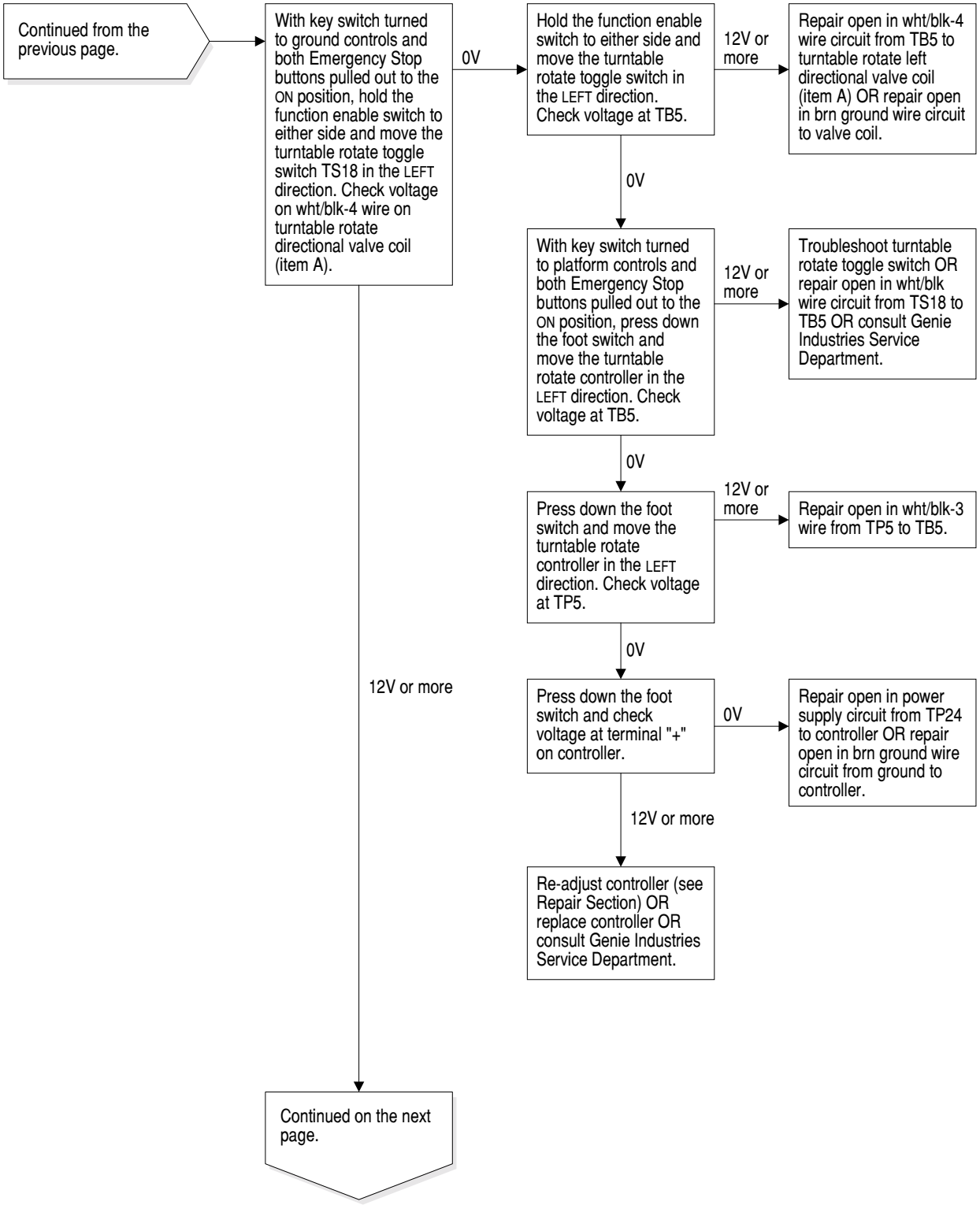

https://truckmanualshub.com/

CHART 18

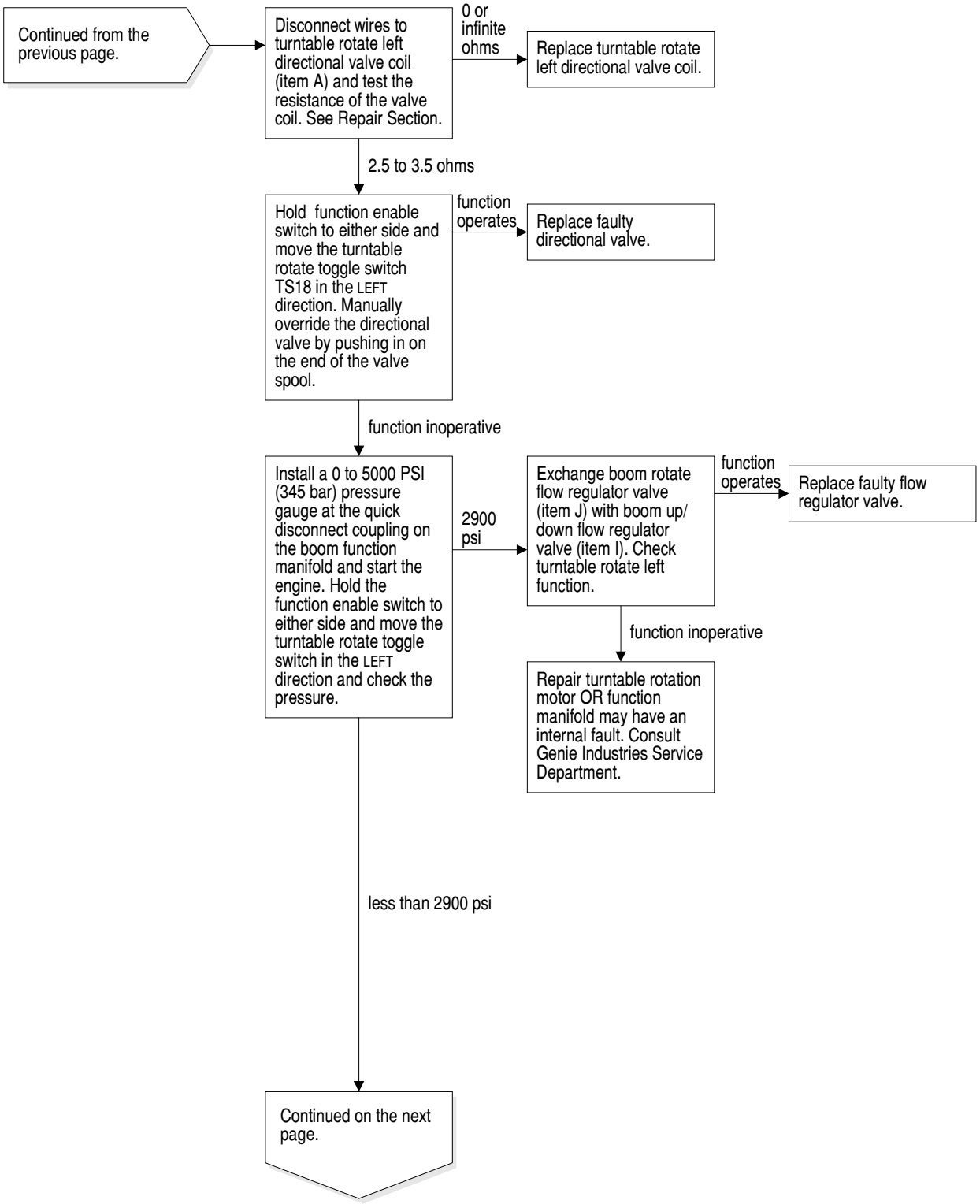

https://truckmanualshub.com/

CHART 18

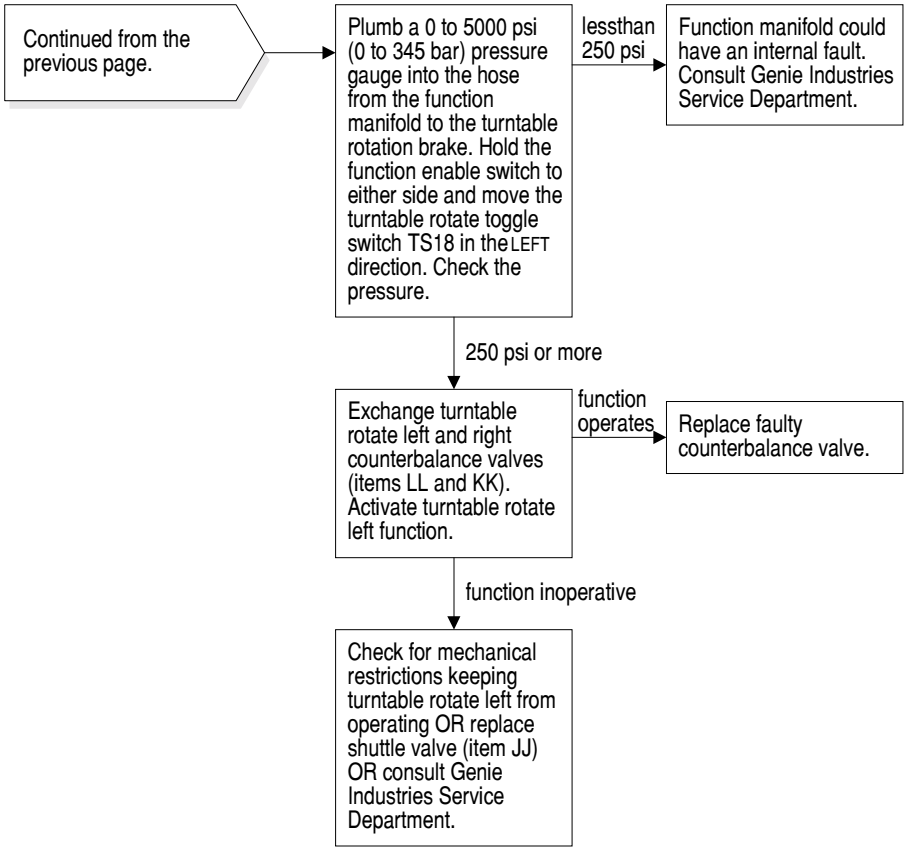

https://truckmanualshub.com/

Chart 19

Turntable Rotate Right Function Inoperative

Be sure all other functions operate normally.

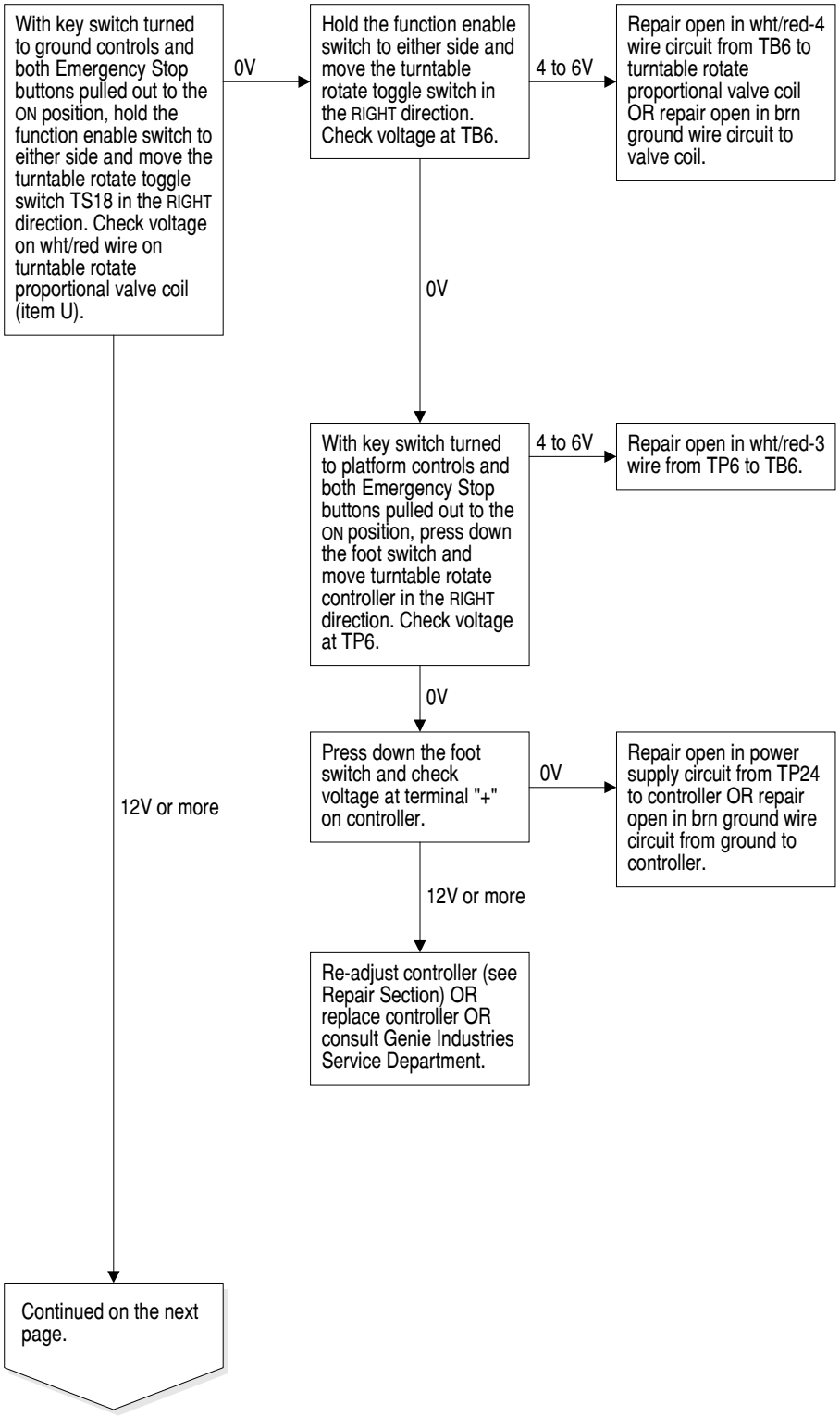

https://truckmanualshub.com/

CHART 19

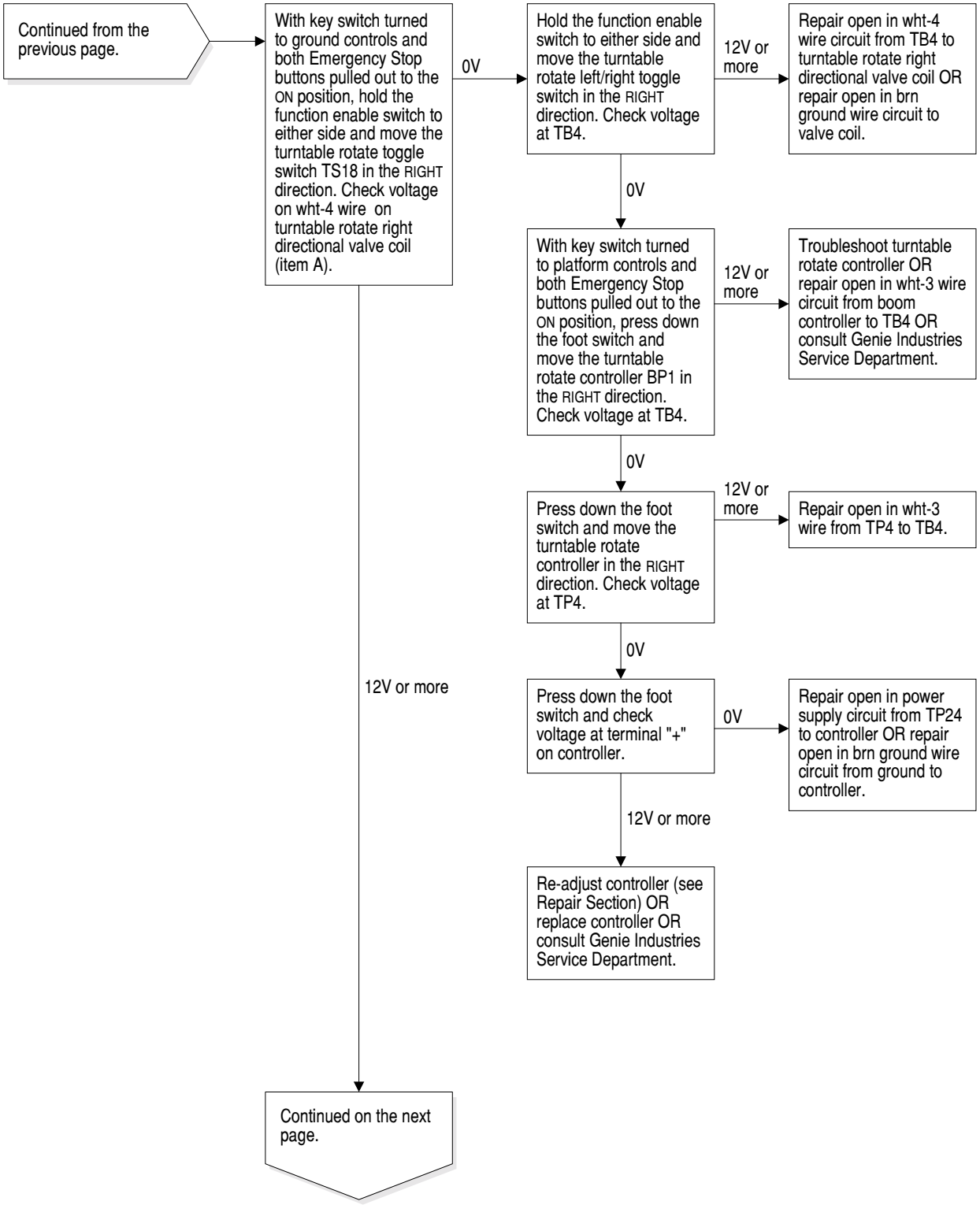

https://truckmanualshub.com/

CHART 19

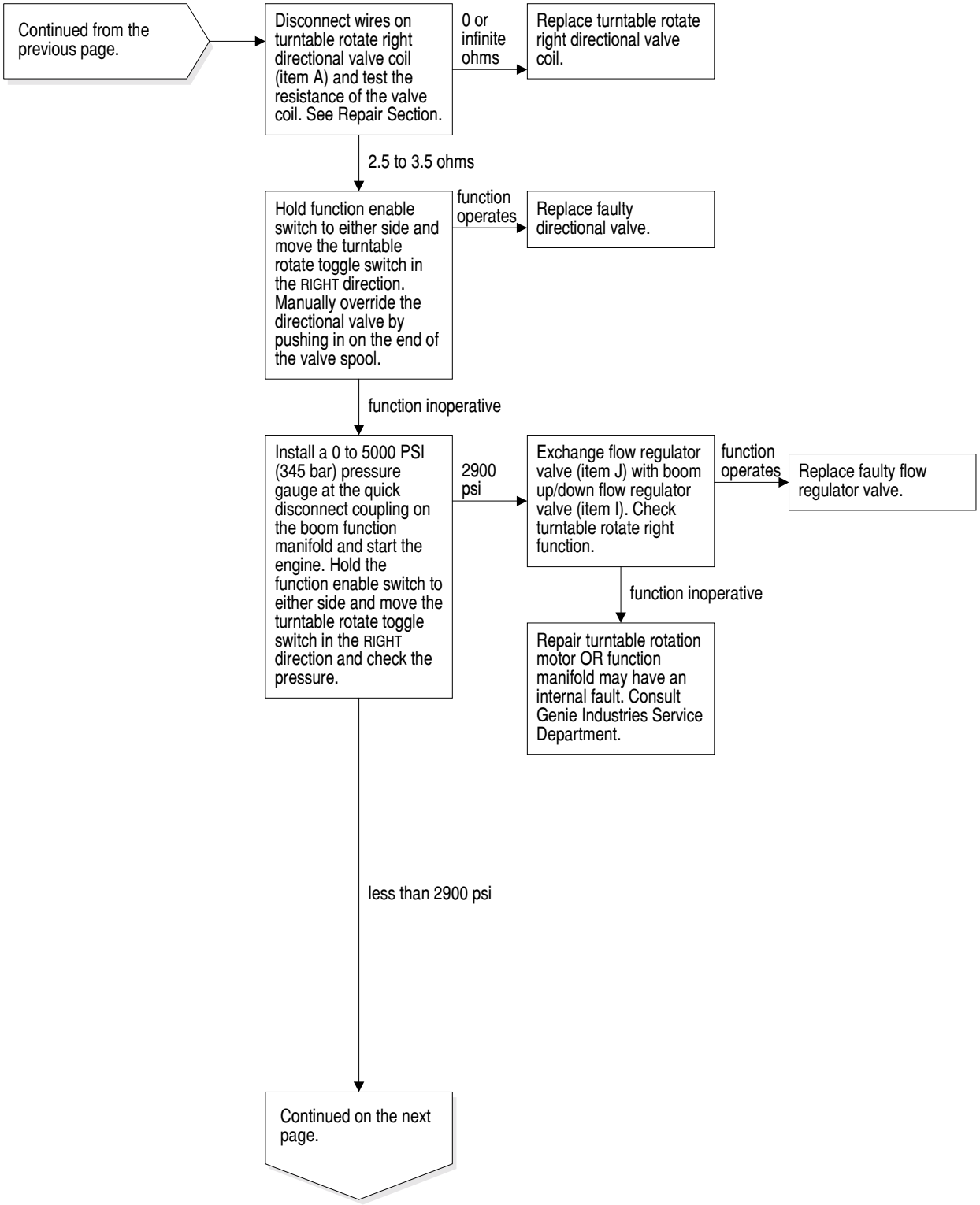

https://truckmanualshub.com/

CHART 19

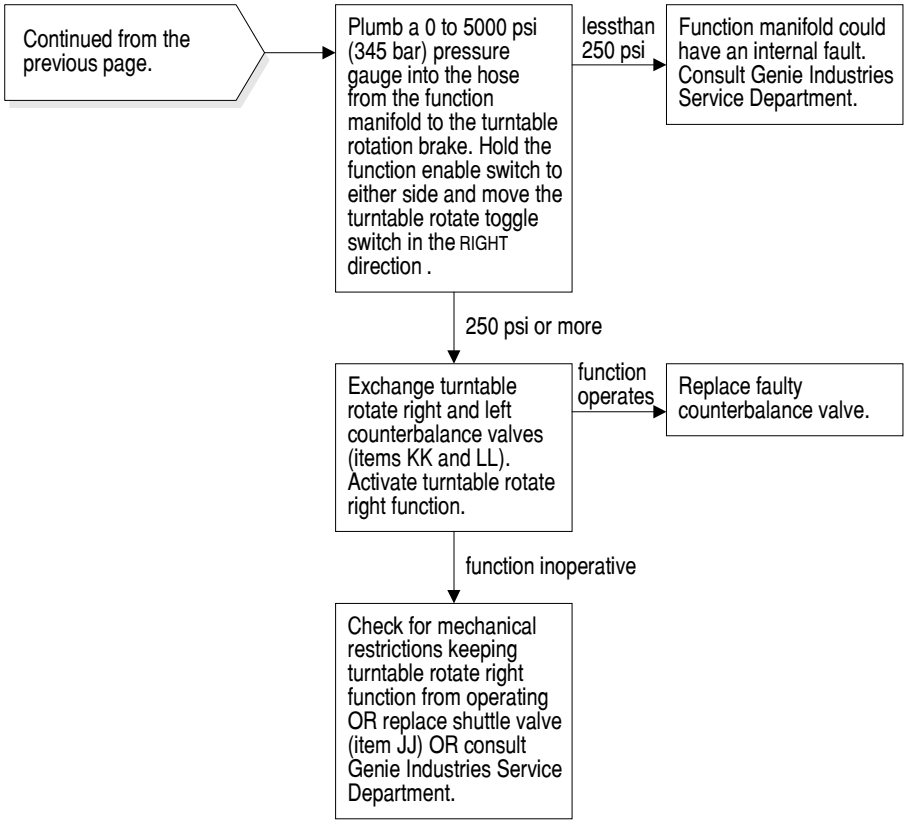

https://truckmanualshub.com/

Chart 20

All Platform Leveling Functions Inoperative

Be sure all other functions operate normally.

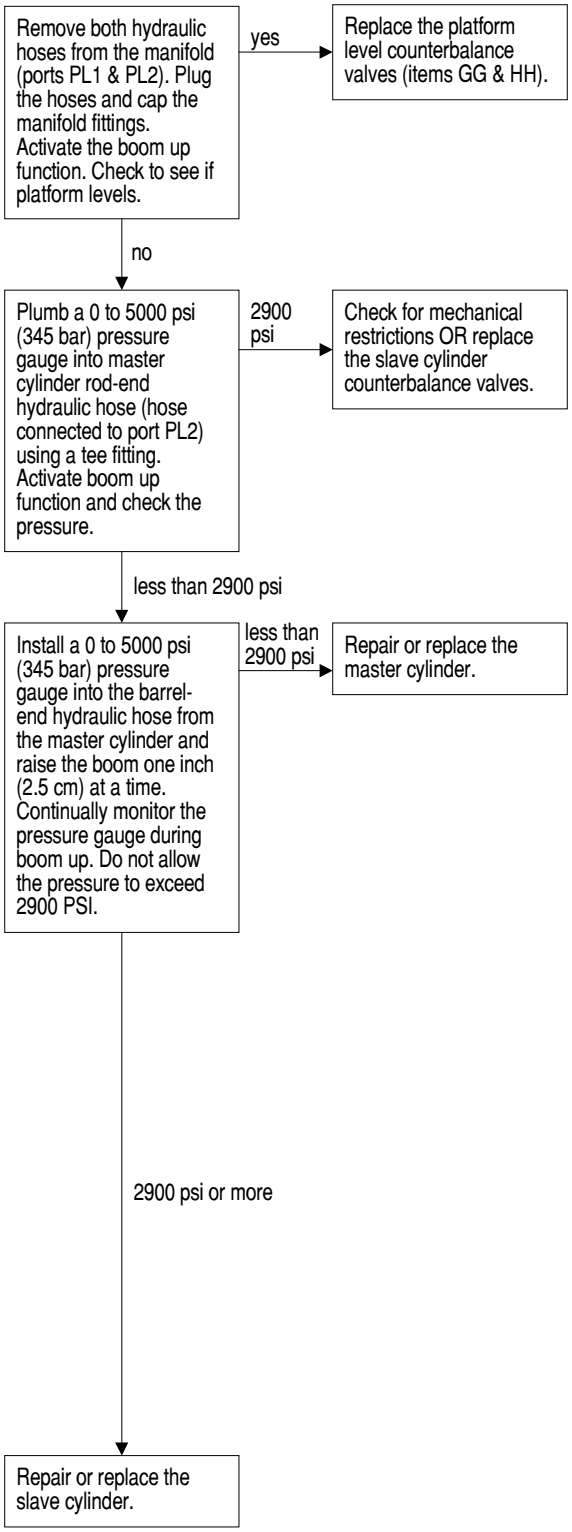

https://truckmanualshub.com/

Chart 21

Platform Level Up Function Inoperative

Be sure all other functions operate normally.

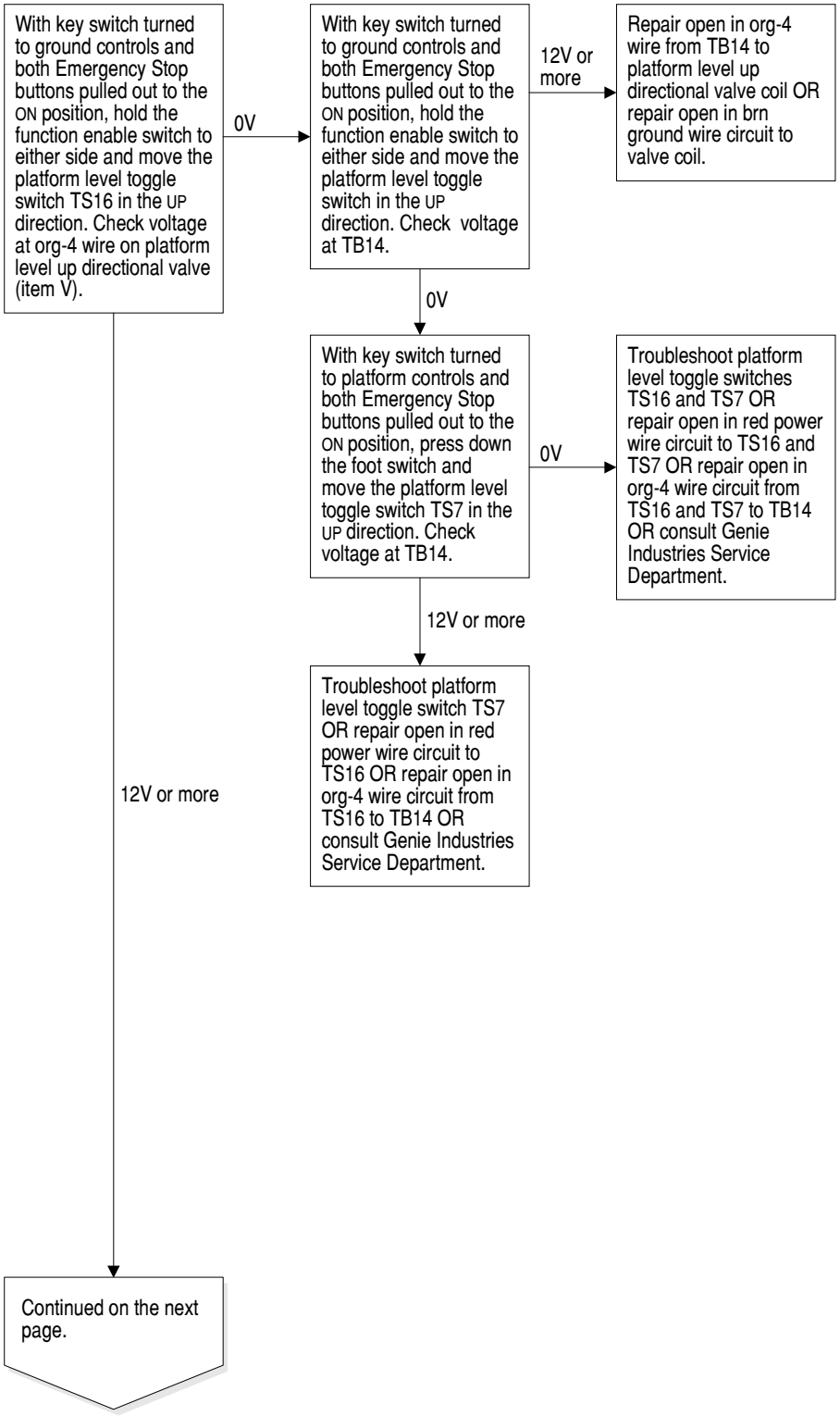

https://truckmanualshub.com/

CHART 21

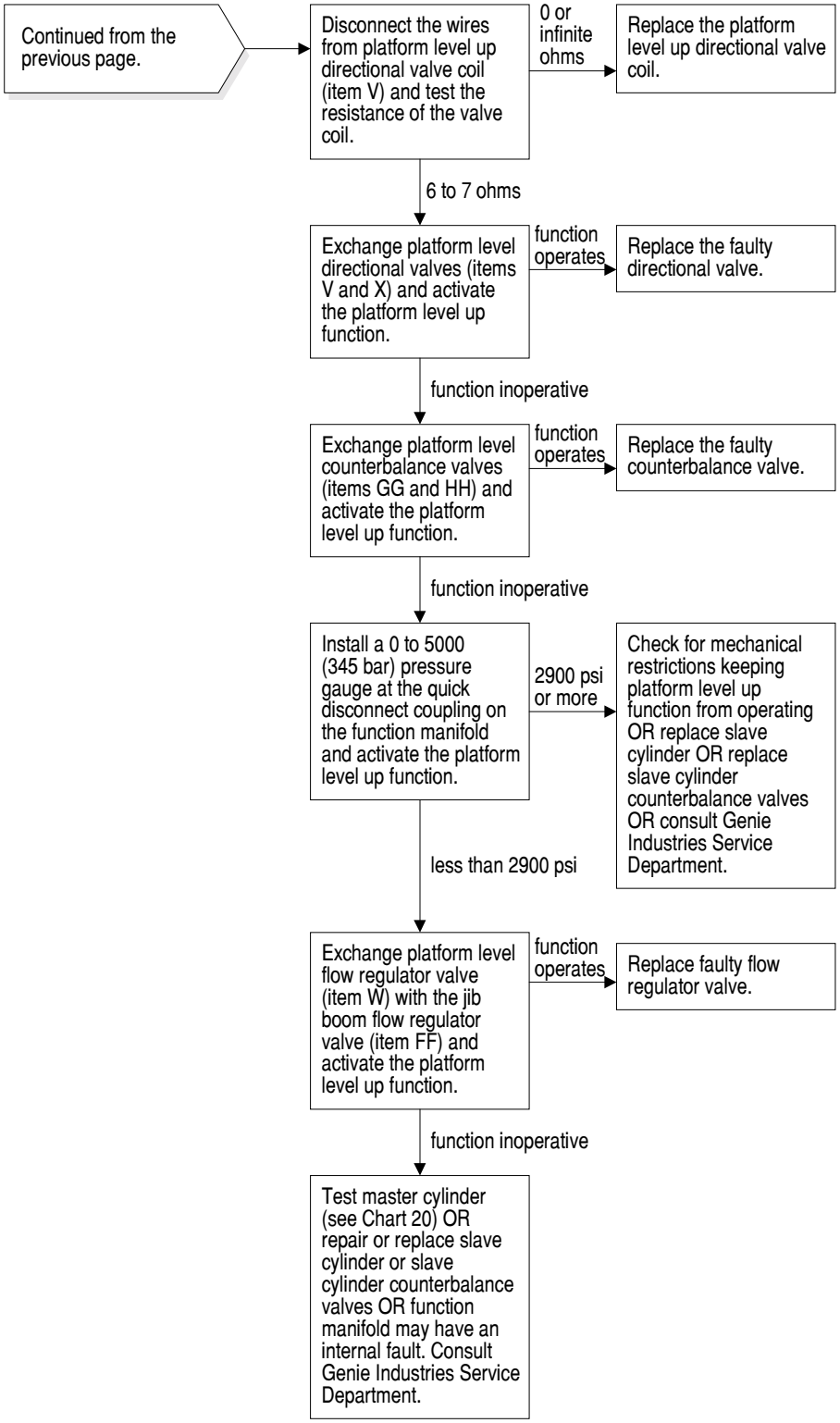

https://truckmanualshub.com/

Chart 22

Platform Level Down Function Inoperative

Be sure all other functions operate normally.

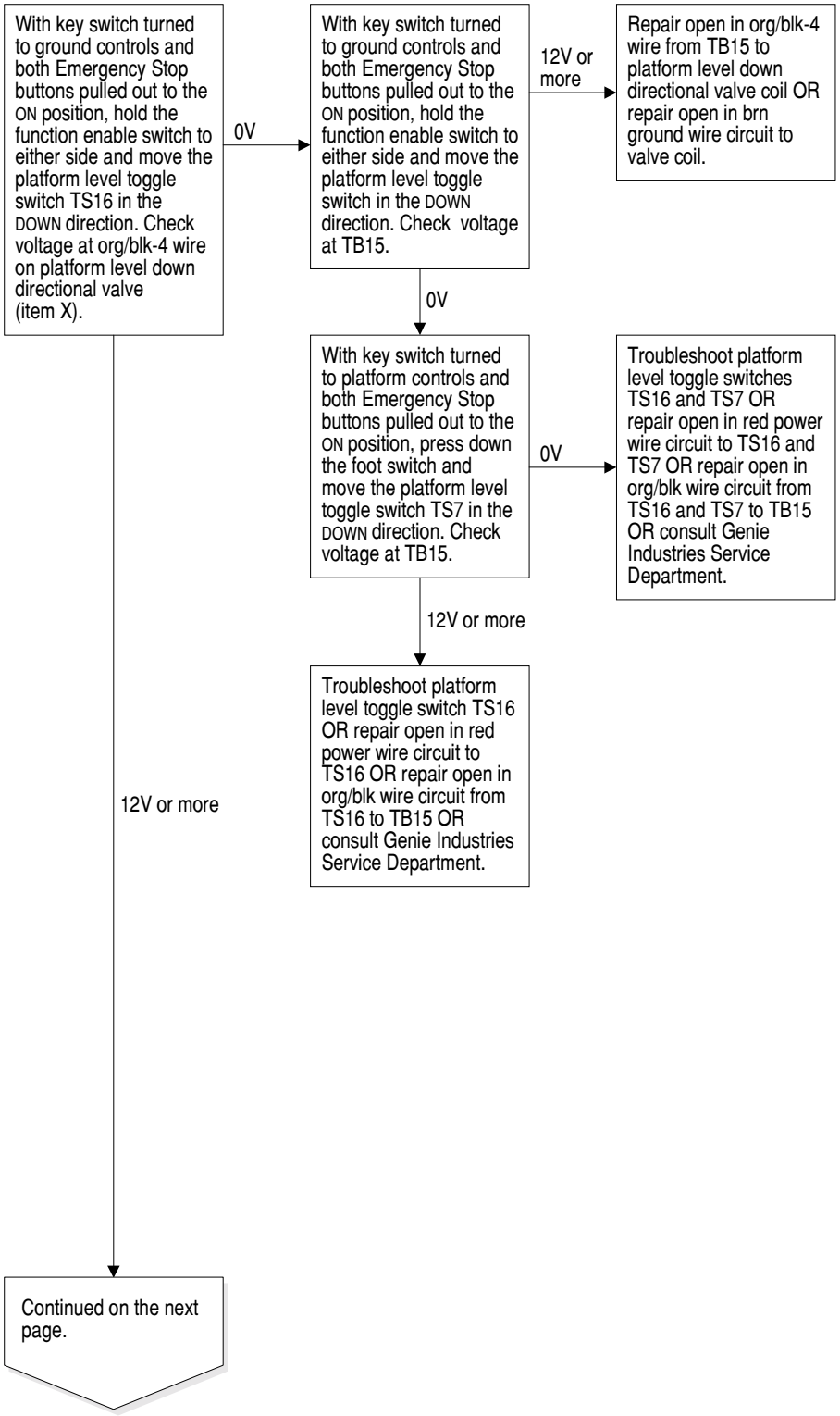

https://truckmanualshub.com/

CHART 22

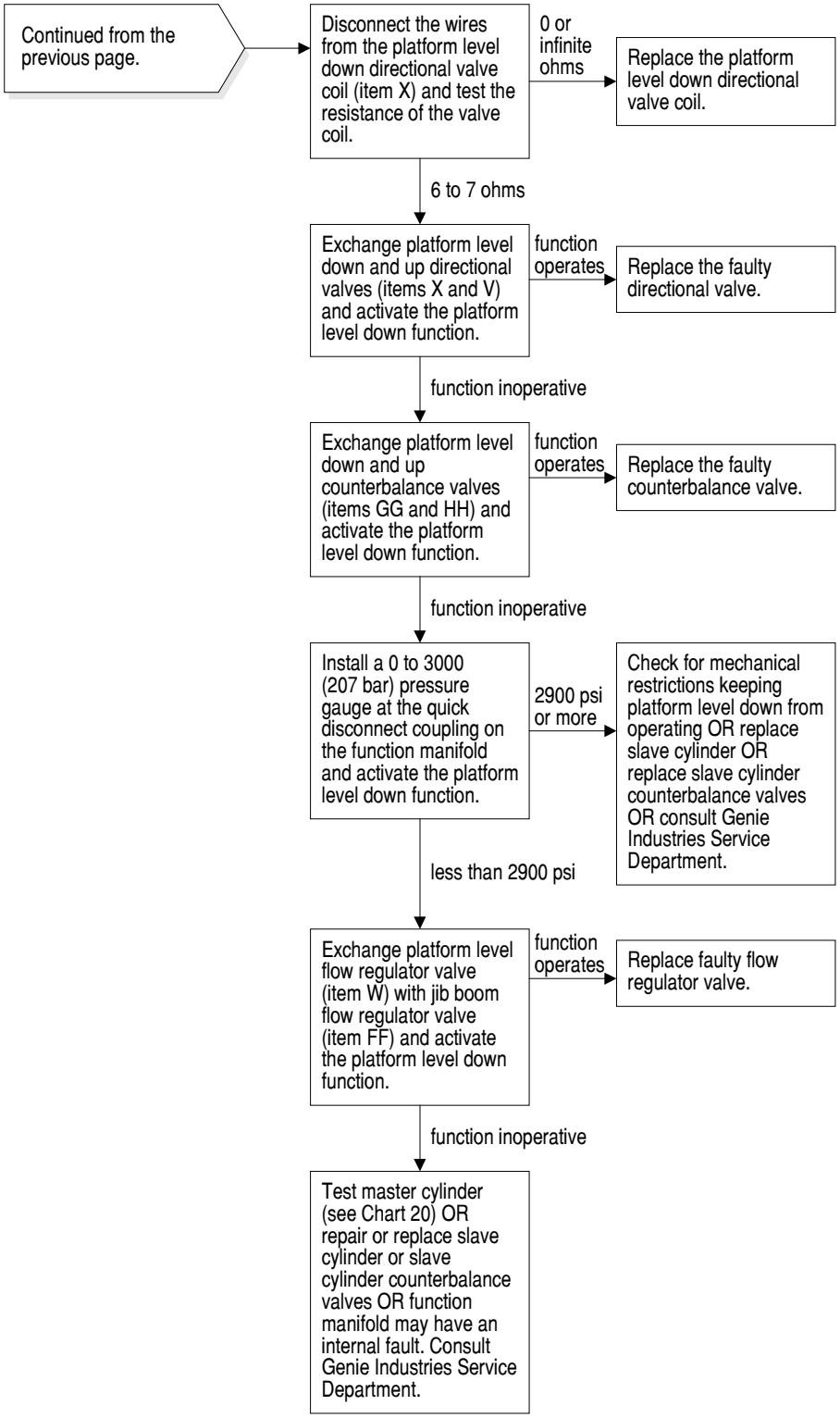

https://truckmanualshub.com/

Chart 23

Platform Rotate Left Function Inoperative

Be sure all other functions operate normally.

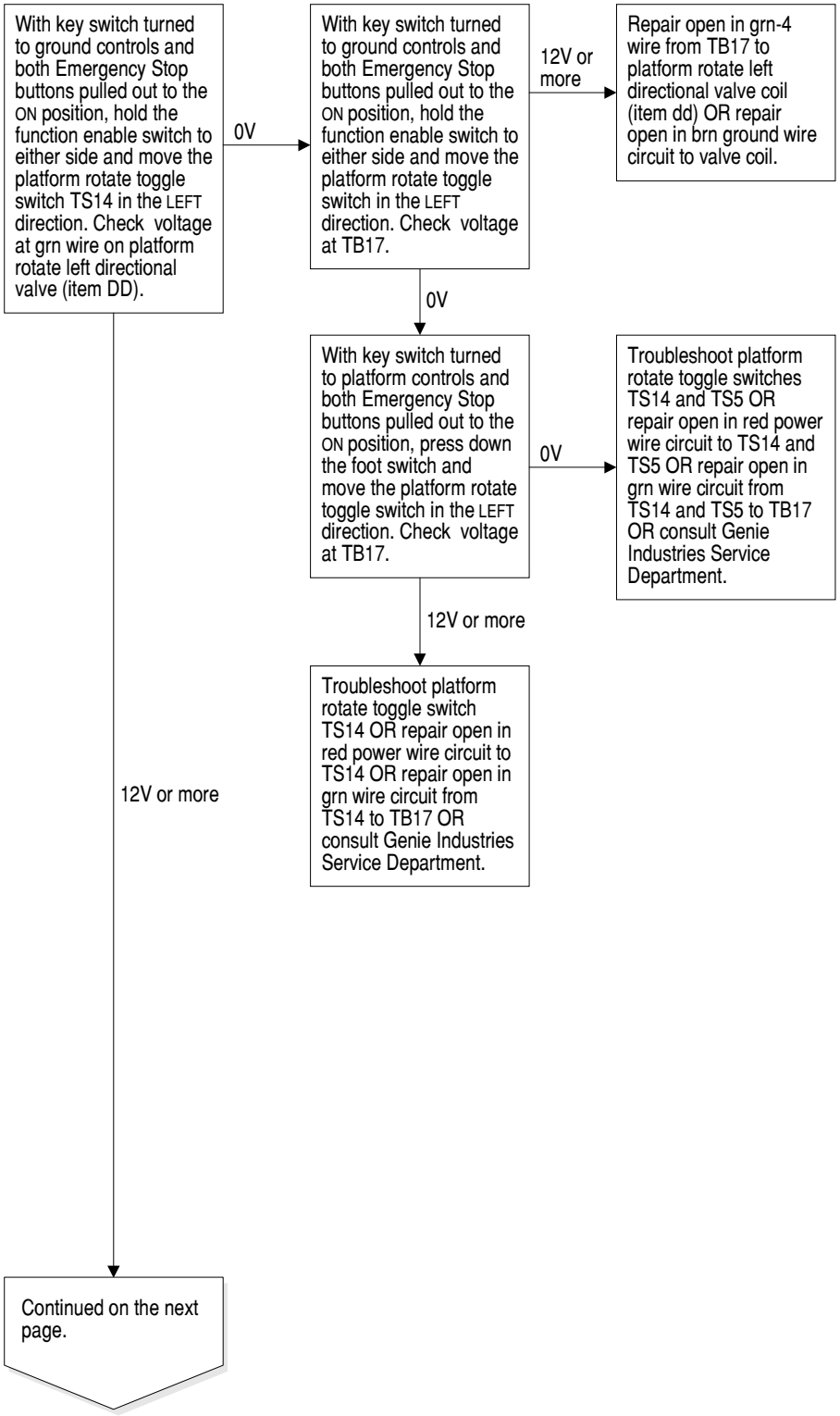

https://truckmanualshub.com/

CHART 23

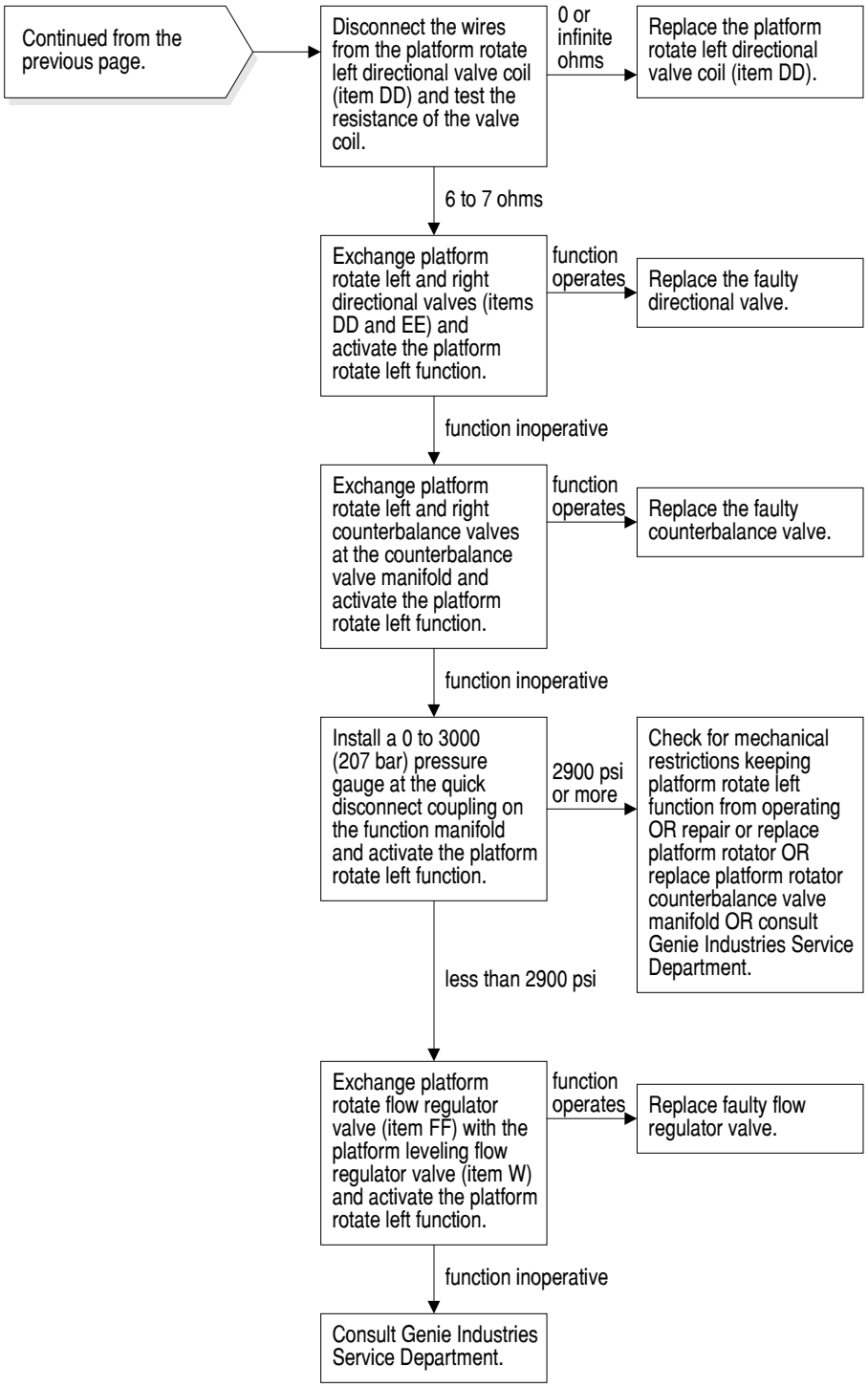

https://truckmanualshub.com/

Chart 24

Platform Rotate Right Function Inoperative

Be sure all other functions operate normally.

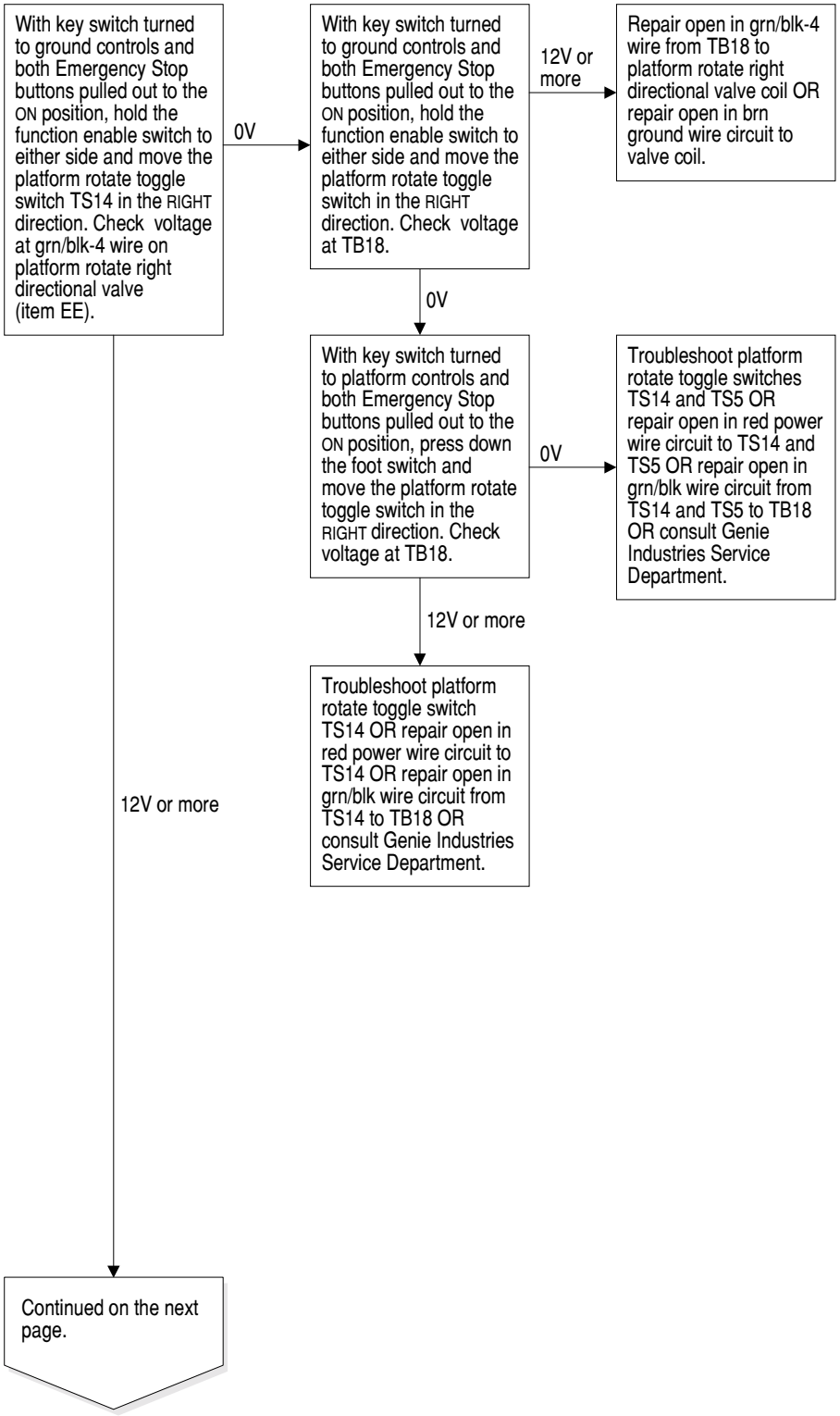

https://truckmanualshub.com/

CHART 24

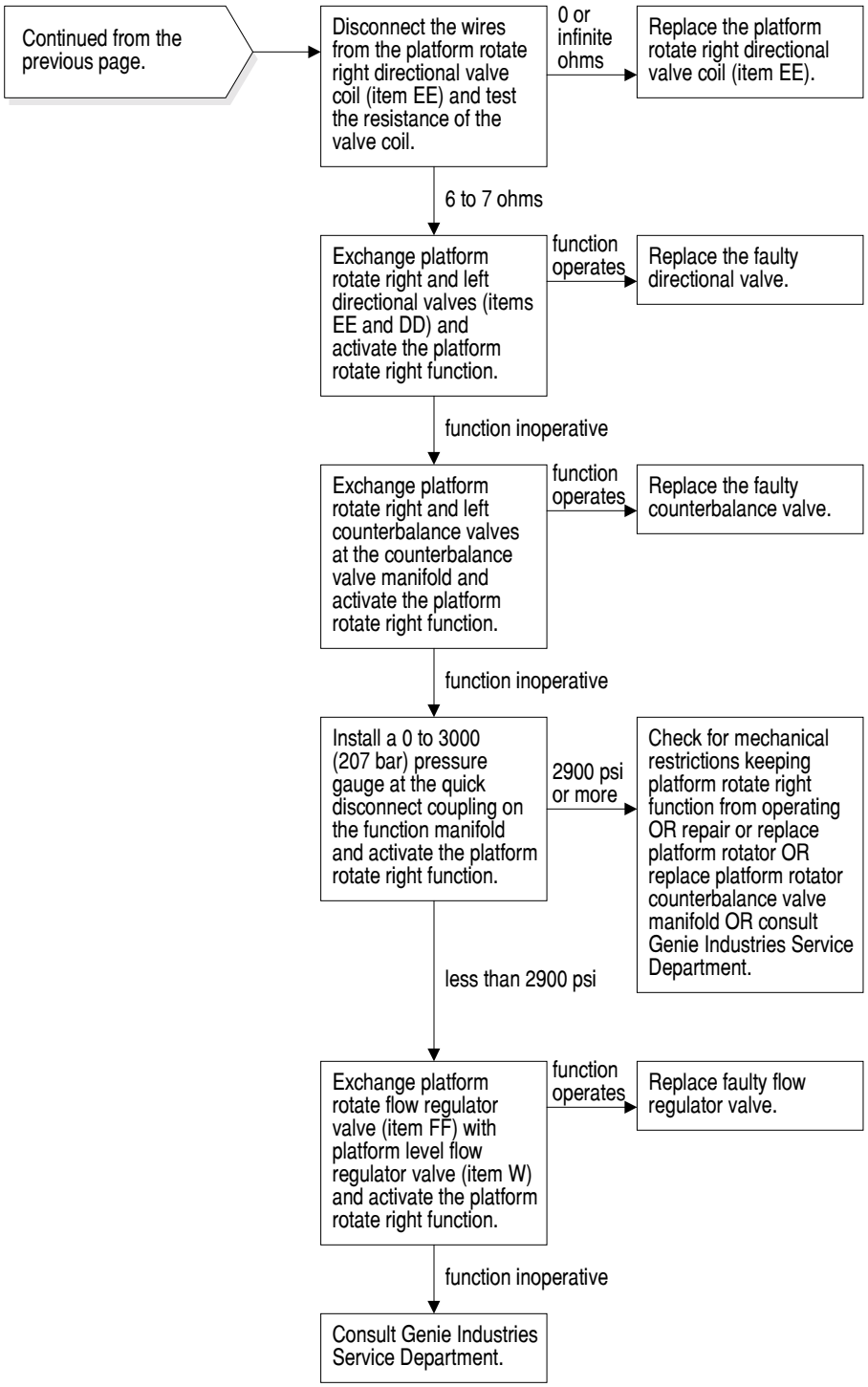

https://truckmanualshub.com/

Chart 25

Jib Boom Up Function Inoperative, S-85 Models

Be sure all other functions operate normally.

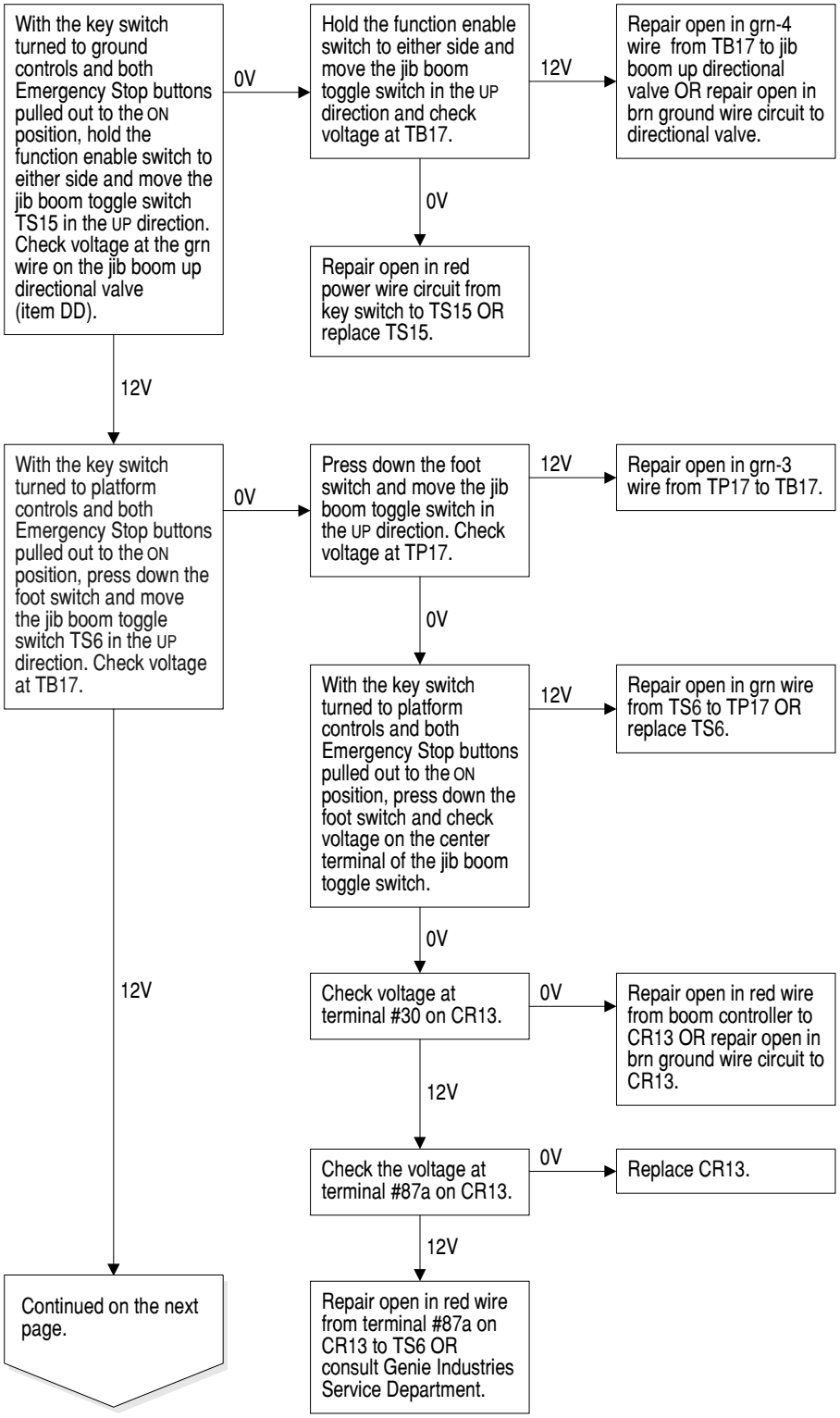

https://truckmanualshub.com/

CHART 25

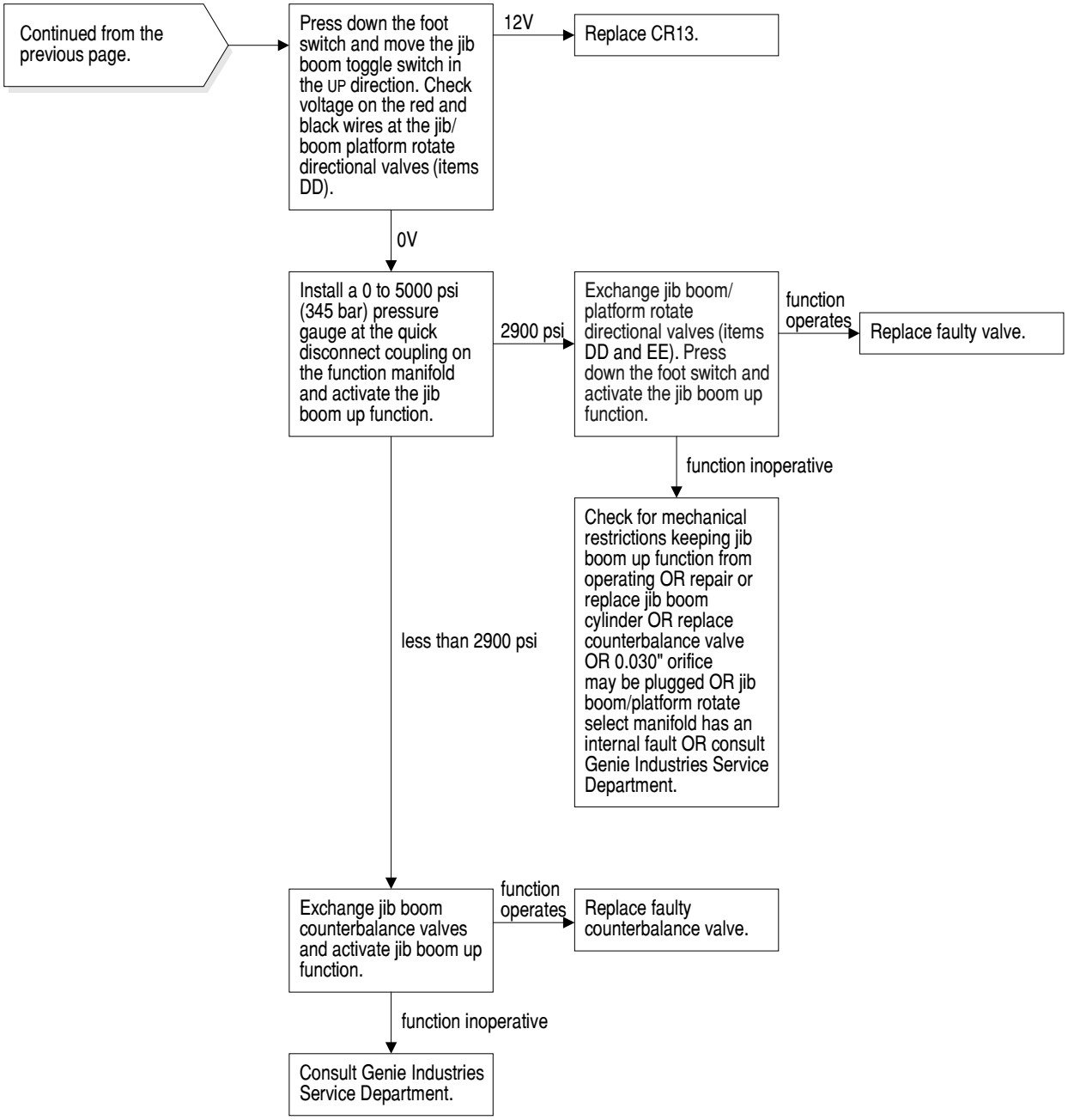

https://truckmanualshub.com/

Chart 26

Jib Boom Down Function Inoperative, S-85 Models

Be sure all other functions operate normally.

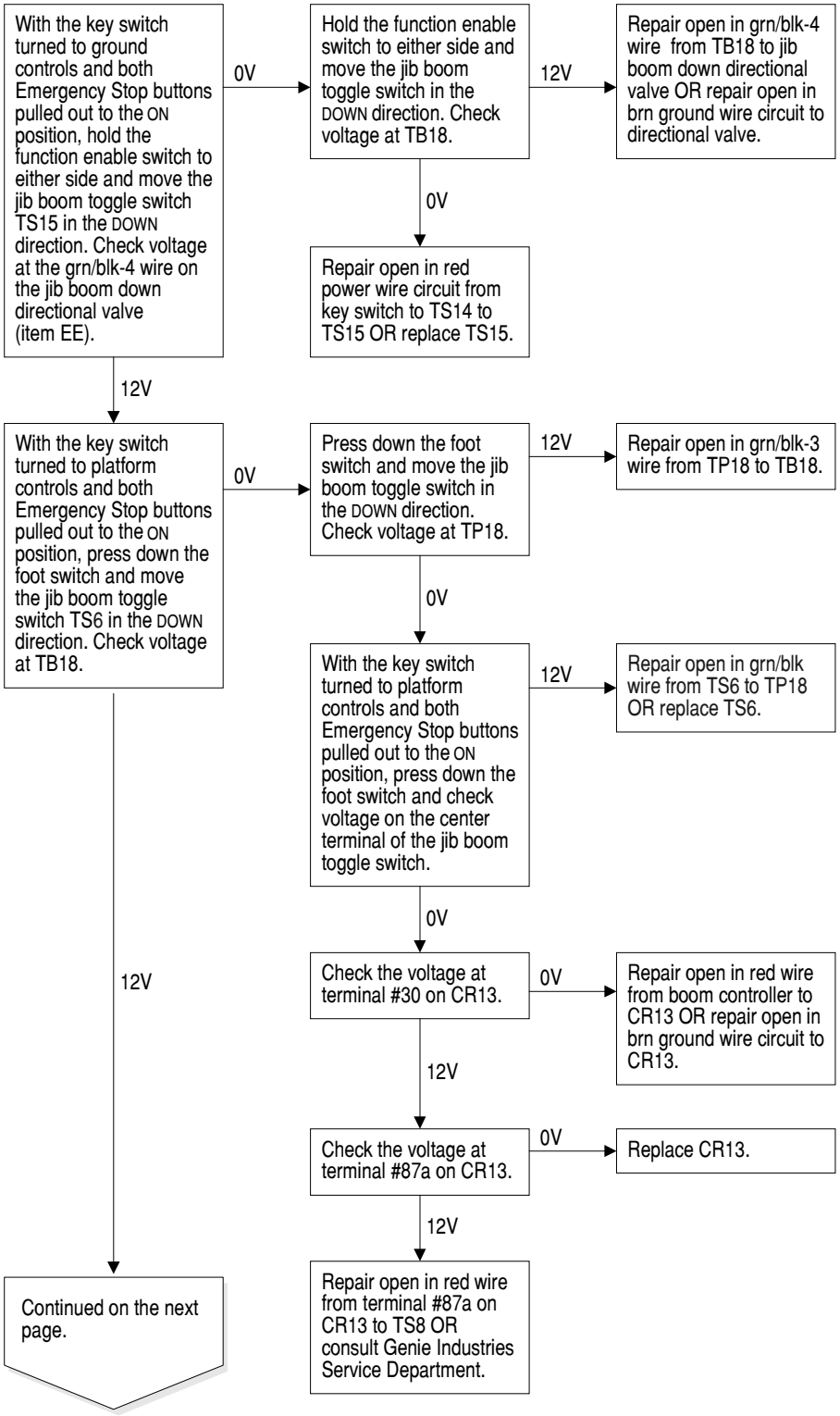

https://truckmanualshub.com/

CHART 26

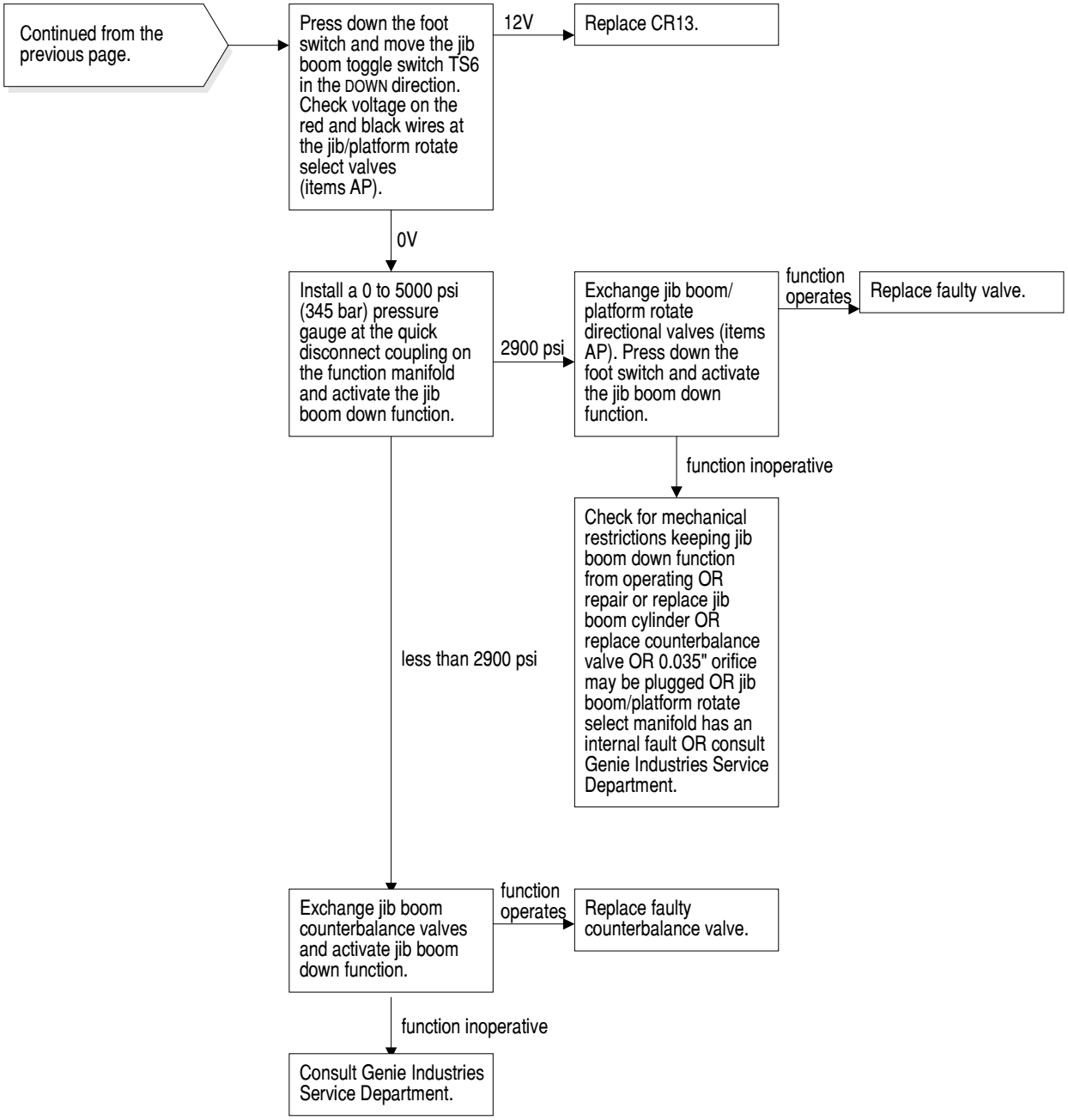

https://truckmanualshub.com/

Chart 27

Drive Chassis Jack Function Inoperative

Be sure all other functions operate normally.

Be sure machine is in the stowed position.

This procedure is written for the non-steer end lift jack. If the steer end lift jack is inoperative, repeat the procedure and substitute steer for non-steer.

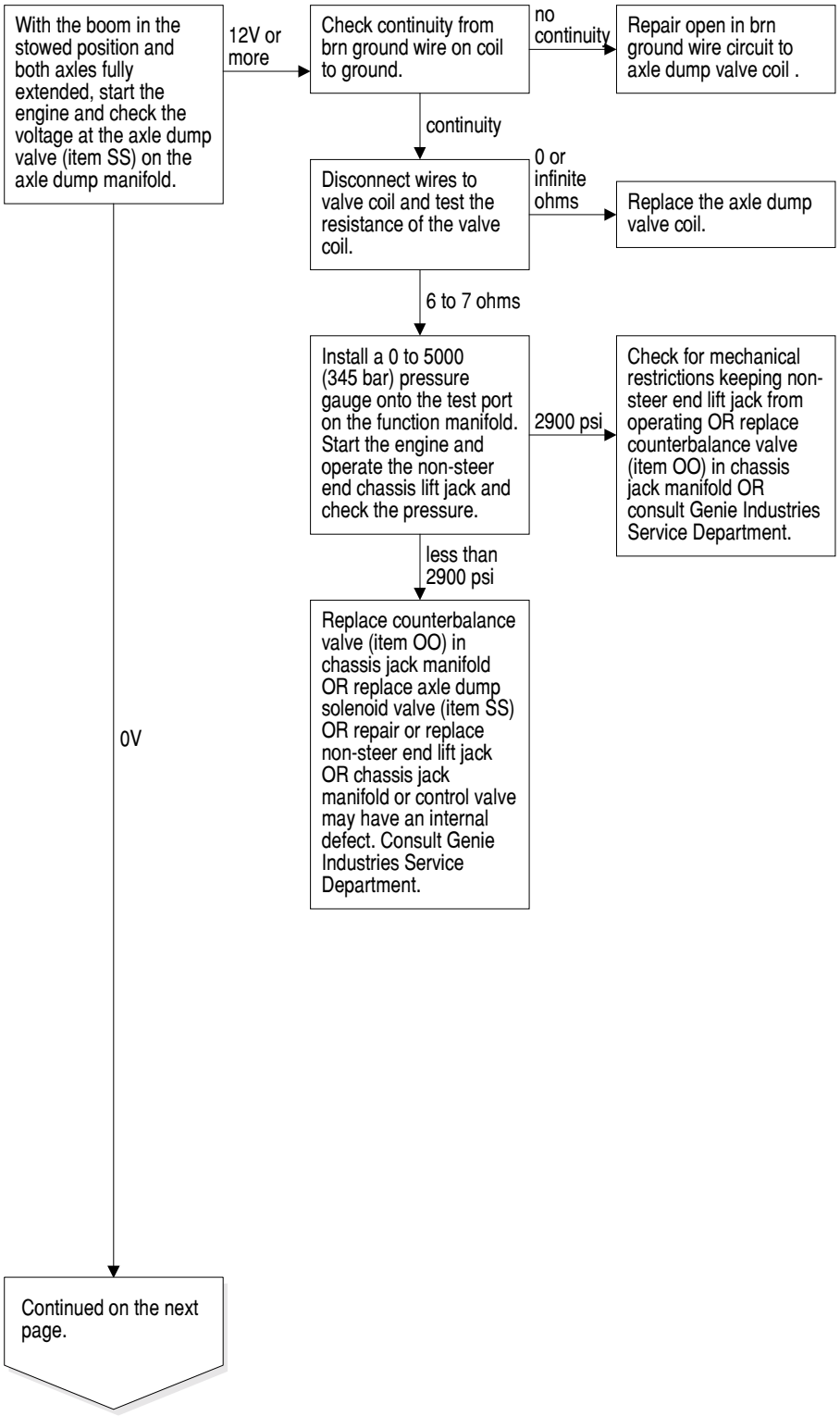

https://truckmanualshub.com/

CHART 27

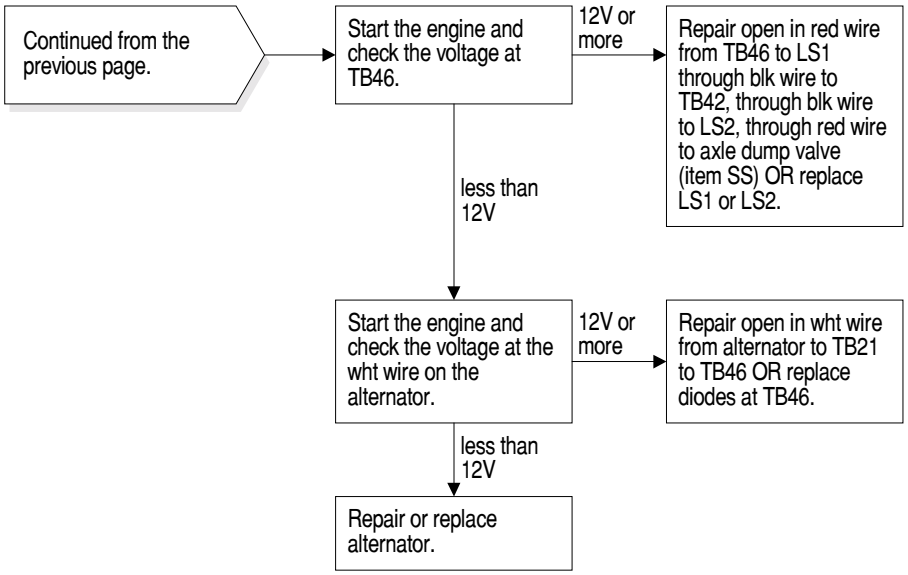

https://truckmanualshub.com/

Chart 28

Axle Extend/ Retract Function Inoperative

Be sure all other functions operate normally.

Be sure machine is in the stowed postion.

Be sure that the chassis lift jacks operate properly.

This procedure is written for the non-steer end axle. If the steer end axle is inoperative, repeat the procedure and substitute steer for non-steer.

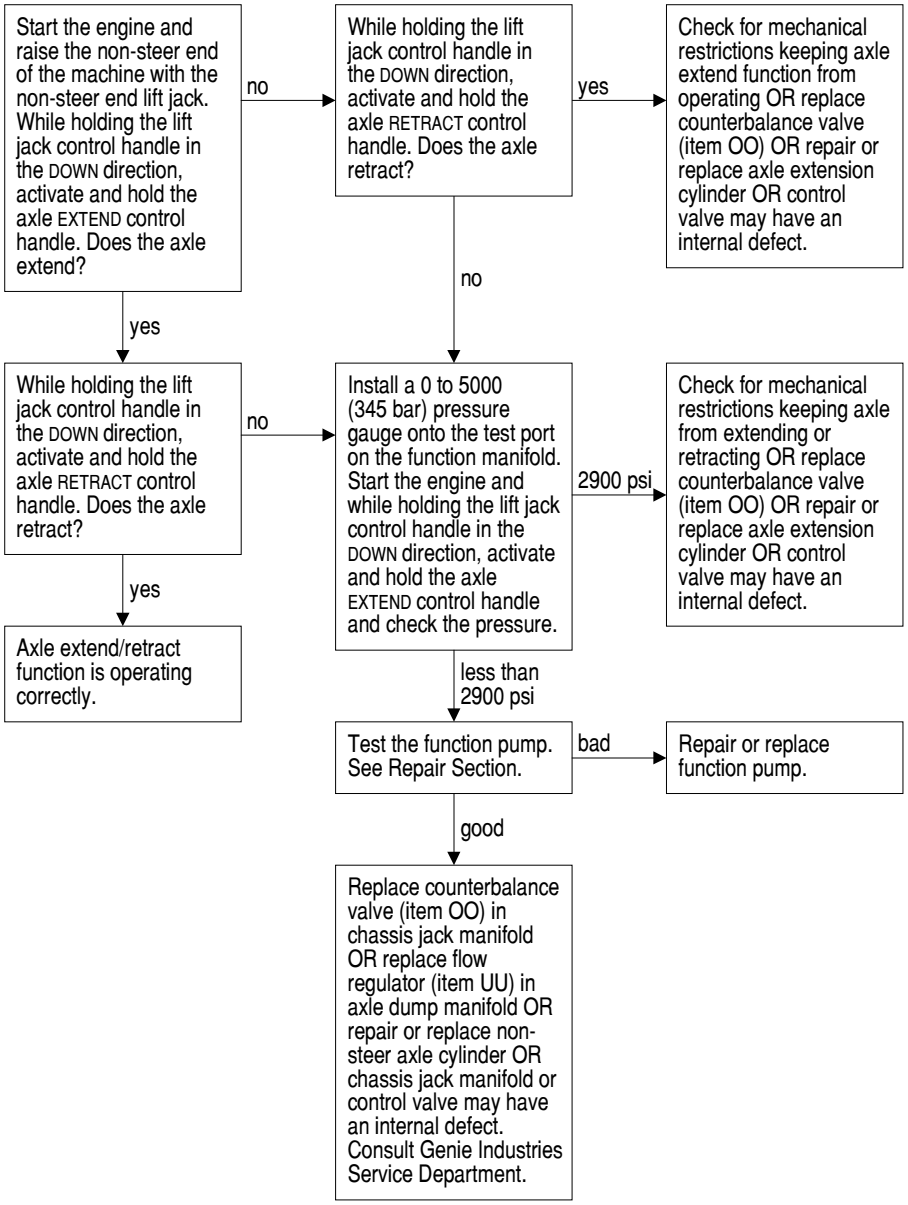

https://truckmanualshub.com/

Chart 29

Steer Left Function Inoperative

Be sure all other functions operate normally.

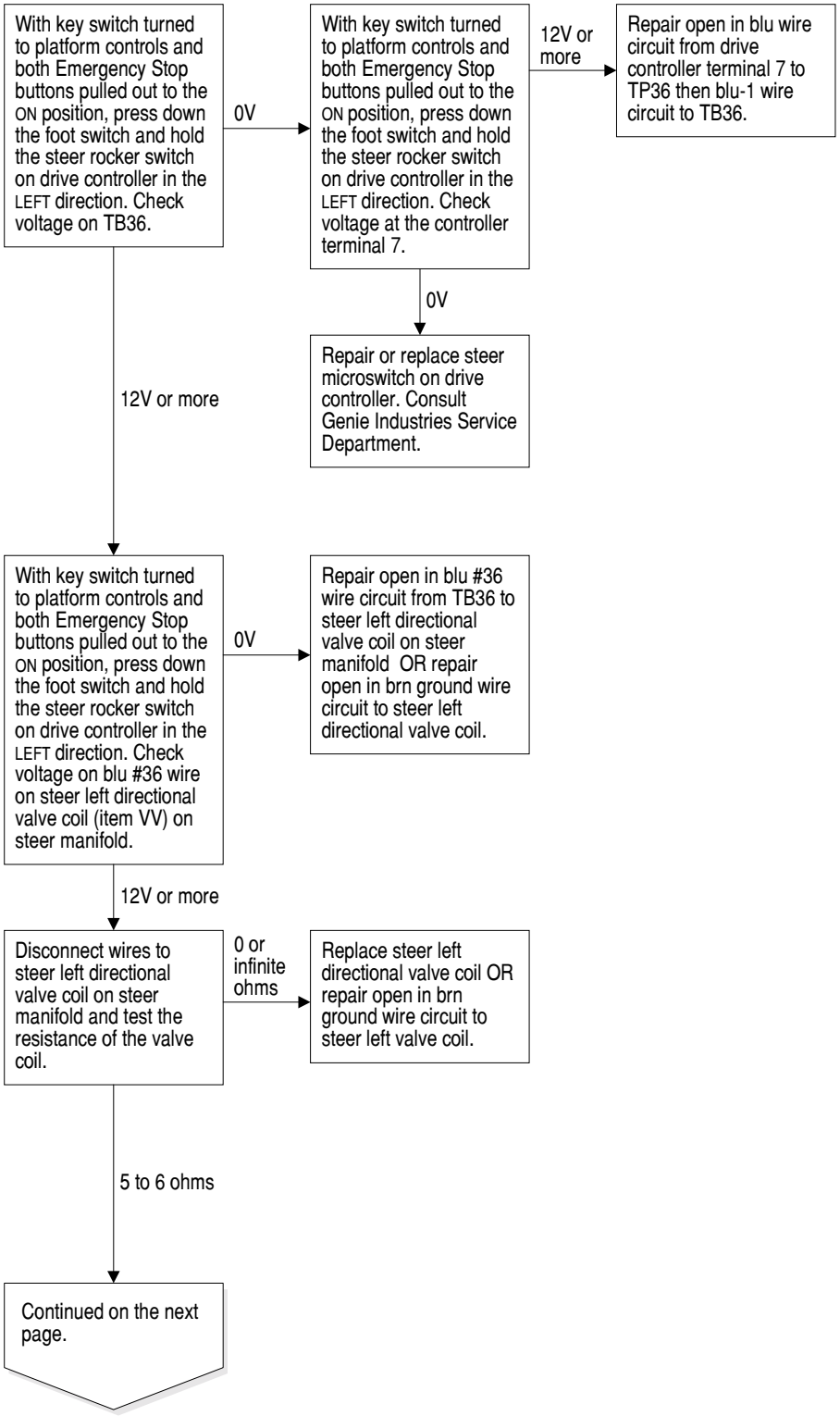

https://truckmanualshub.com/

CHART 29

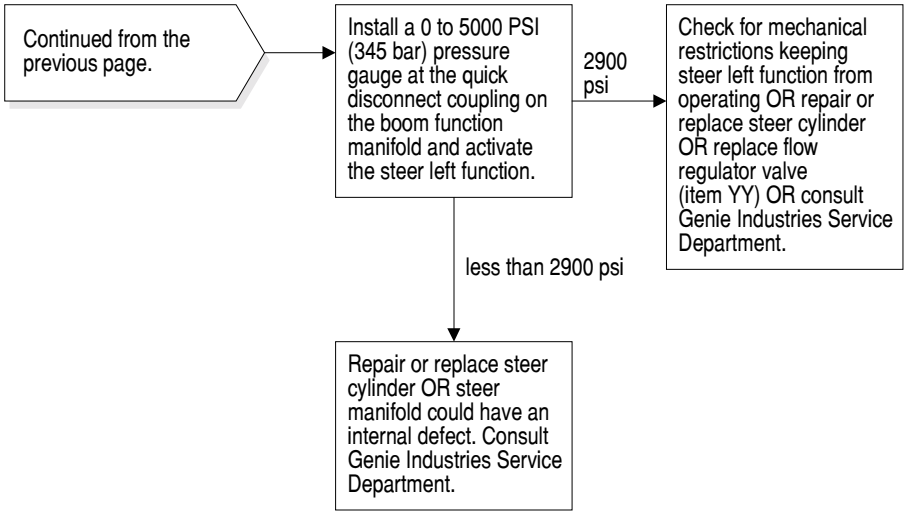

https://truckmanualshub.com/

Chart 30

Steer Right Function Inoperative

Be sure all other functions operate normally.

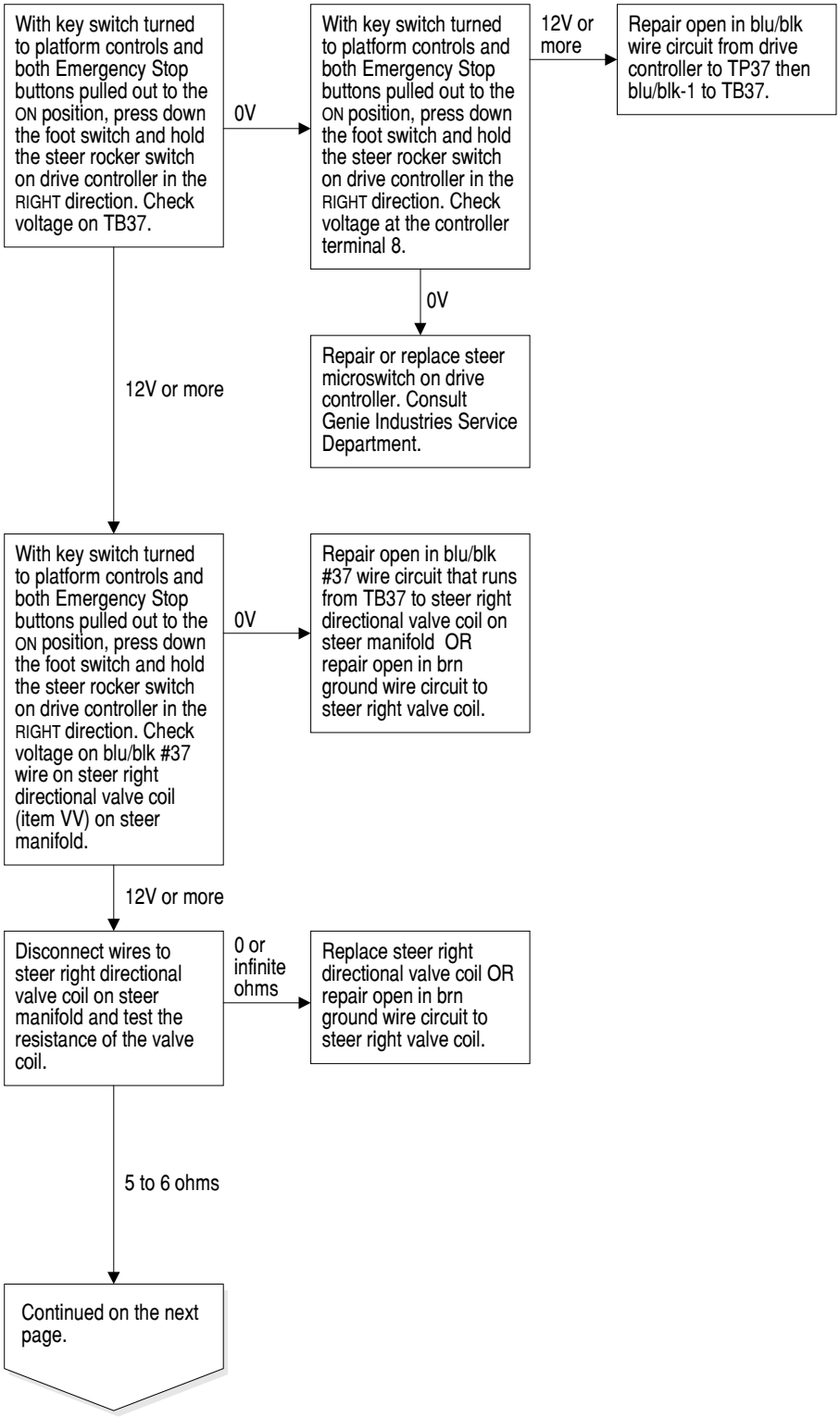

https://truckmanualshub.com/

CHART 30

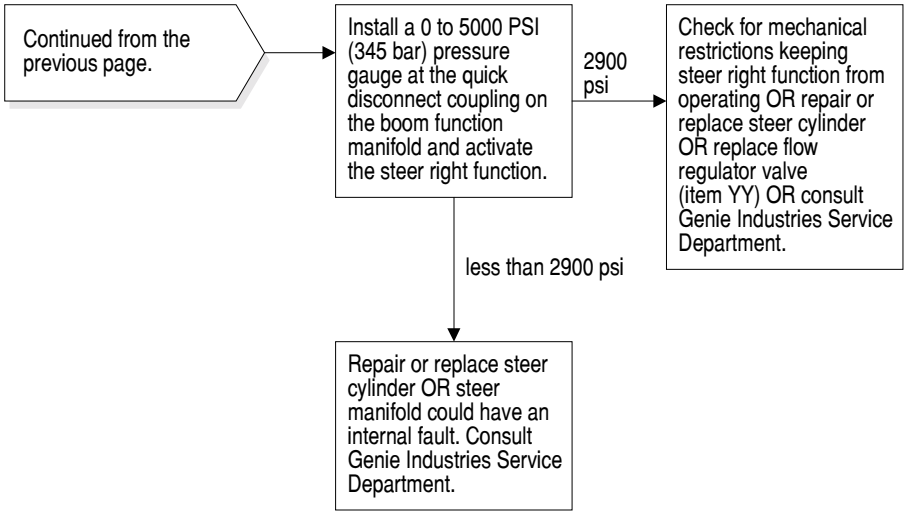

https://truckmanualshub.com/

Chart 31

All Drive Functions Inoperative, All Other Functions Operate Normally

Be sure the rpm toggle switch is in the foot switch activated high idle position.

Be sure the hyydraulic tank shut off valves are in the OPEN position.

Be sure machine is not in the free wheel configuration.

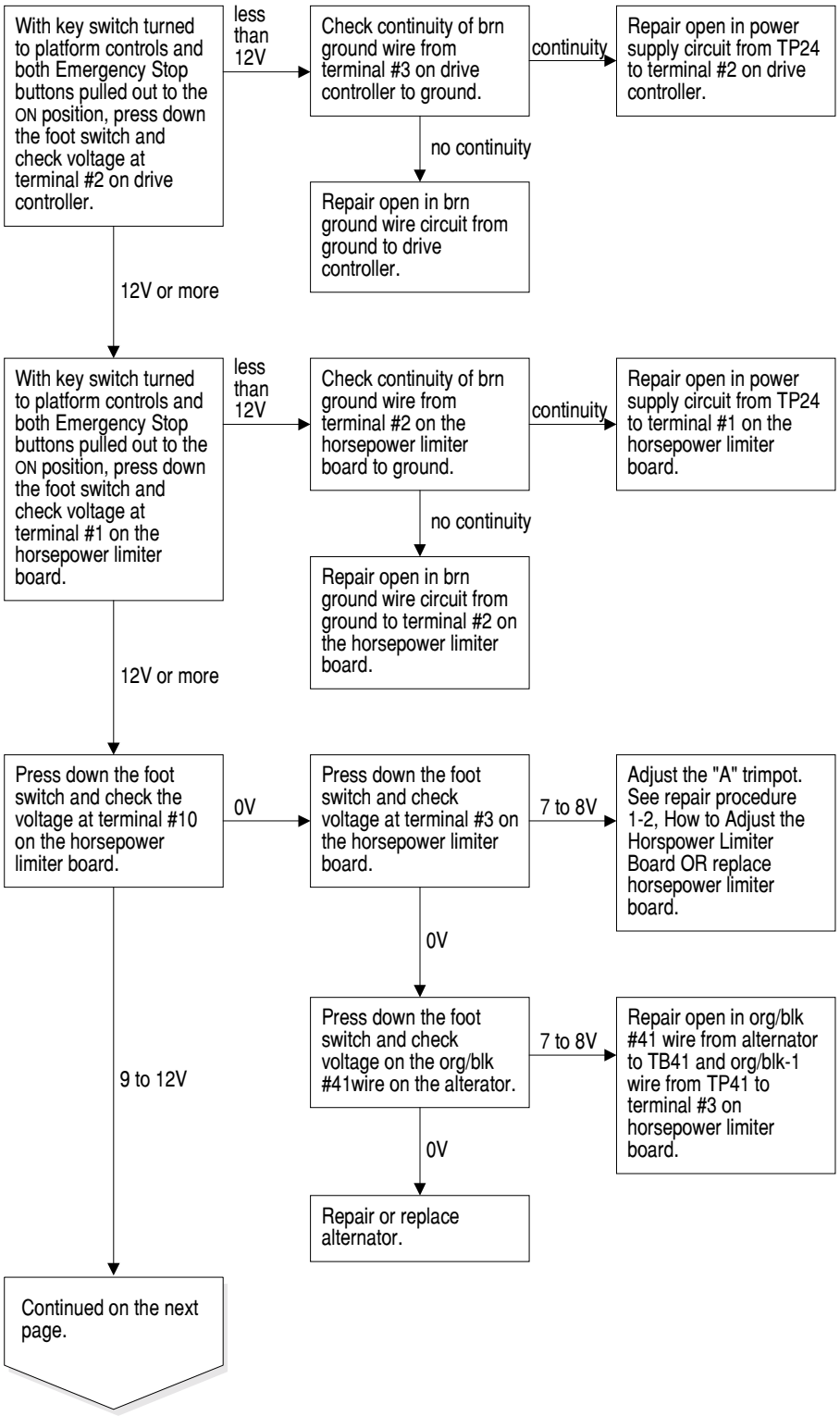

https://truckmanualshub.com/

CHART 31

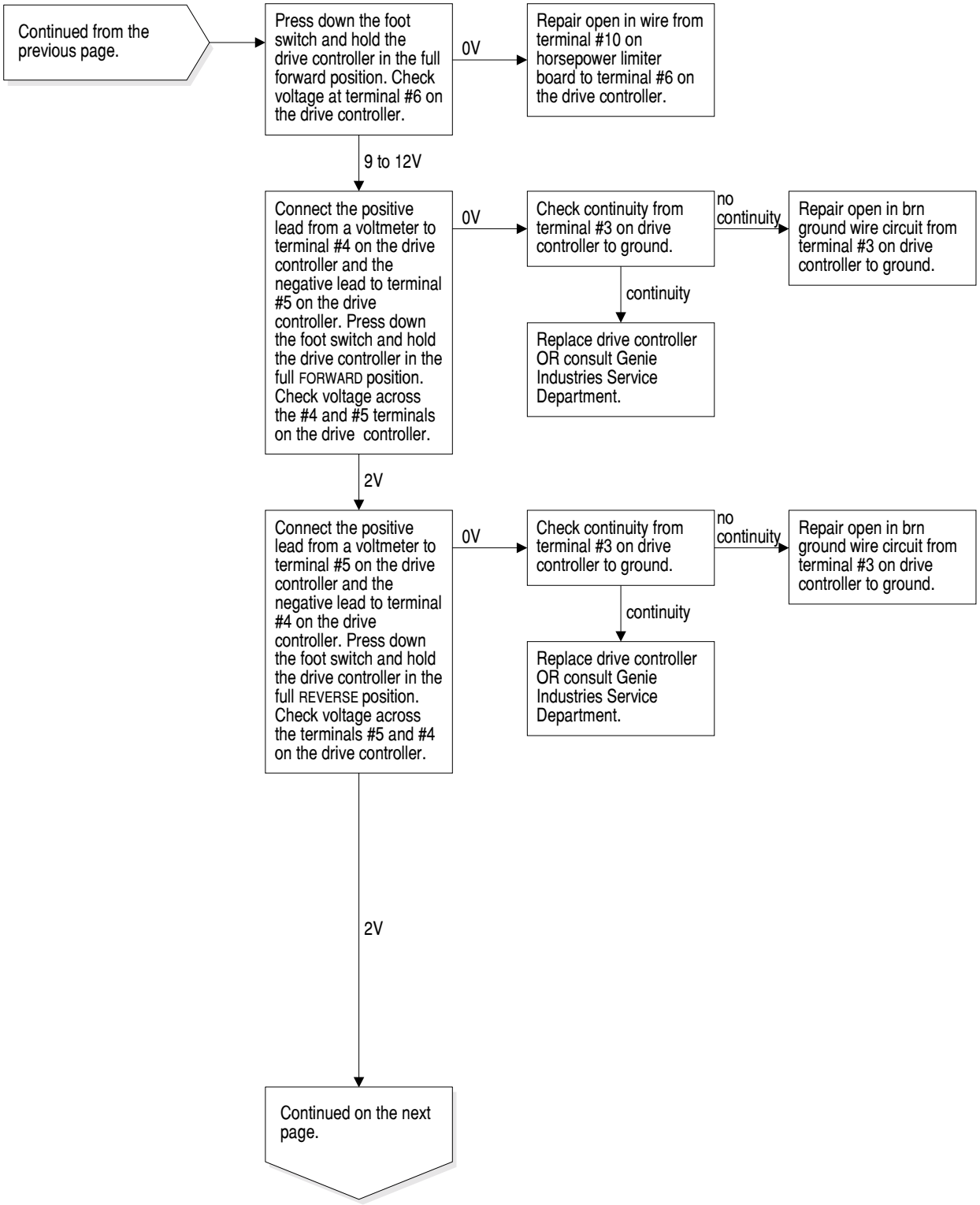

https://truckmanualshub.com/

CHART 31

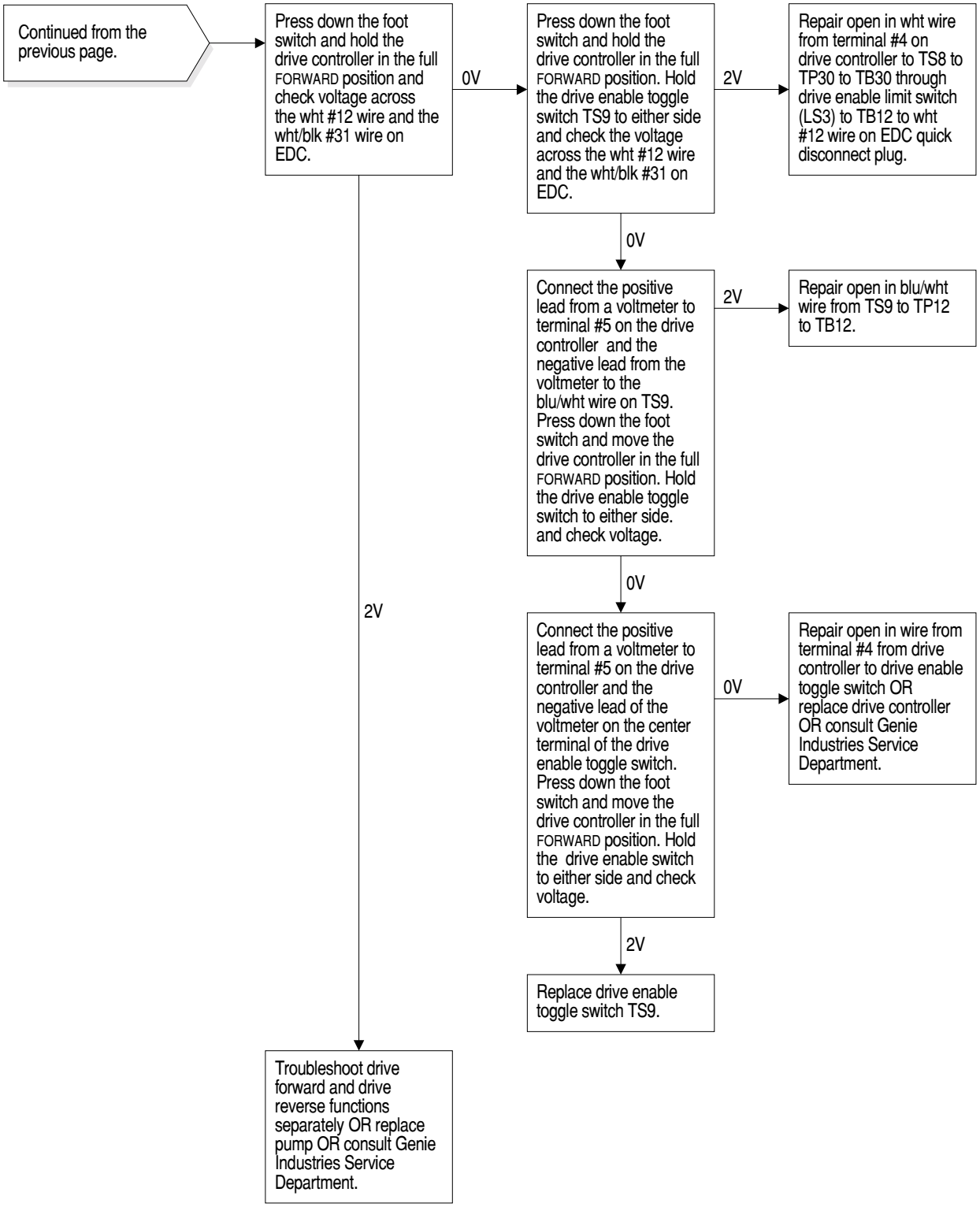

https://truckmanualshub.com/

Chart 32

Drive Forward or Reverse Function Inoperative

Be sure all other functions operate normally including drive in opposite direction of manfunction.

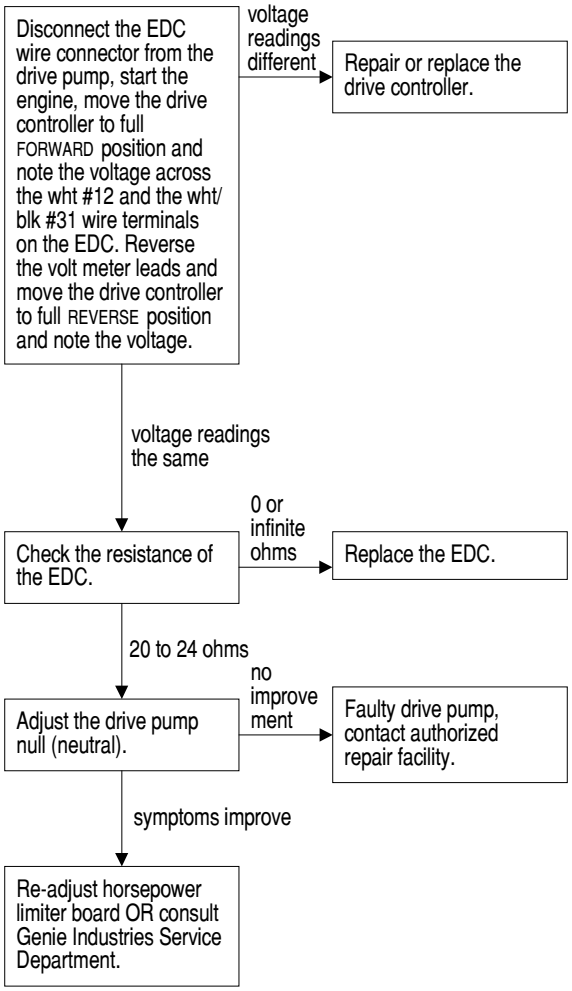

https://truckmanualshub.com/

Chart 33

Traction Function Inoperative

Be sure that all other functions operate normally.

Any type of traction problem, consult Genie Industries Service Department.

https://truckmanualshub.com/

Chart 34

Machine Will Not Drive At Full Speed

Be sure all other functions operate normally.

Be sure the machine is not raised above or extended beyond the drive limit switches.

Be sure the drive limit switches are clear of any debris and are not activated when the boom is in the stowed position.

Be suire that the boom extend limit switch arm is being held down when the boom is retracted.

Be sure the wiring to limit switches is intact and show no signs of damage or corrosion.

Be sure the free-wheel valve is closed on the drive pump.

Be sure the drive speed select switch in in the high range position.

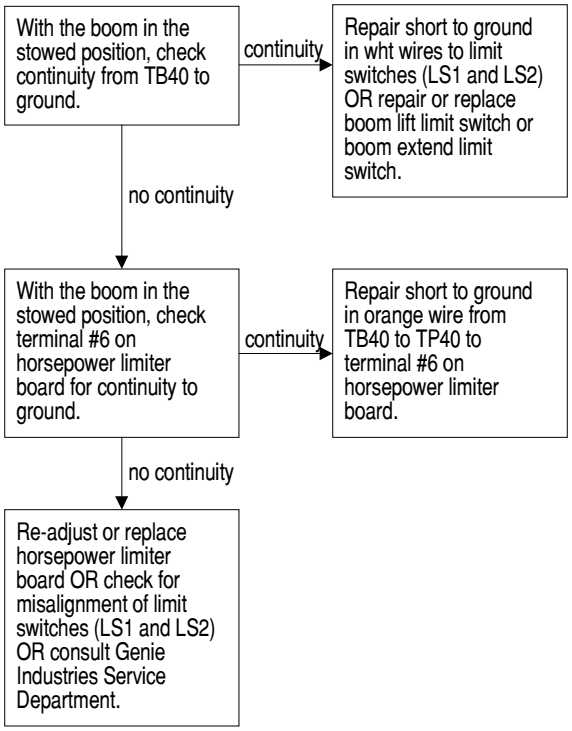

https://truckmanualshub.com/

Chart 35

Machine Drives At Full Speed With Platform Raised or Extended

Be sure boom up drive limit switch is being activated by the cam on the boom when the boom is raised.

Be sure that the boom extend drive limit switch is not being held down or being activated when the boom is extended.

Be sure the wiring to limit switches is intact and show no signs of damage or corrosion.

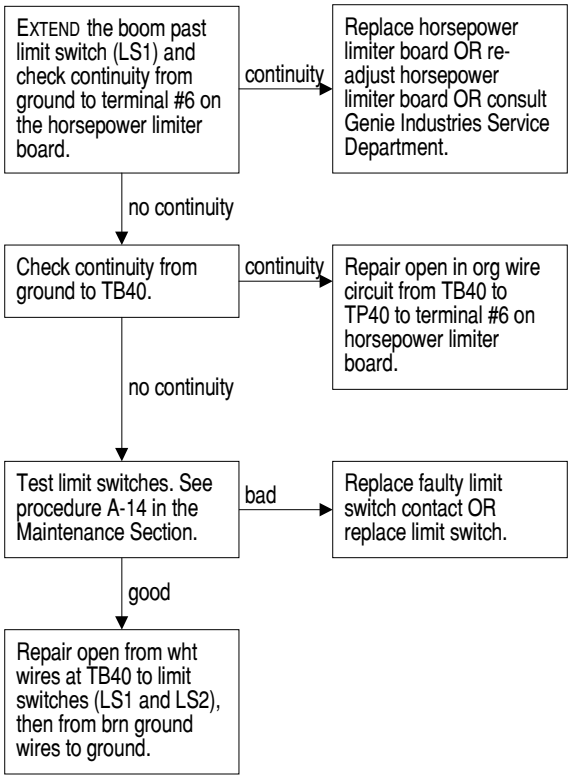

https://truckmanualshub.com/

Chart 36

Drive Enable System Is Malfunctioning

Be sure the boom is in the stowed position.

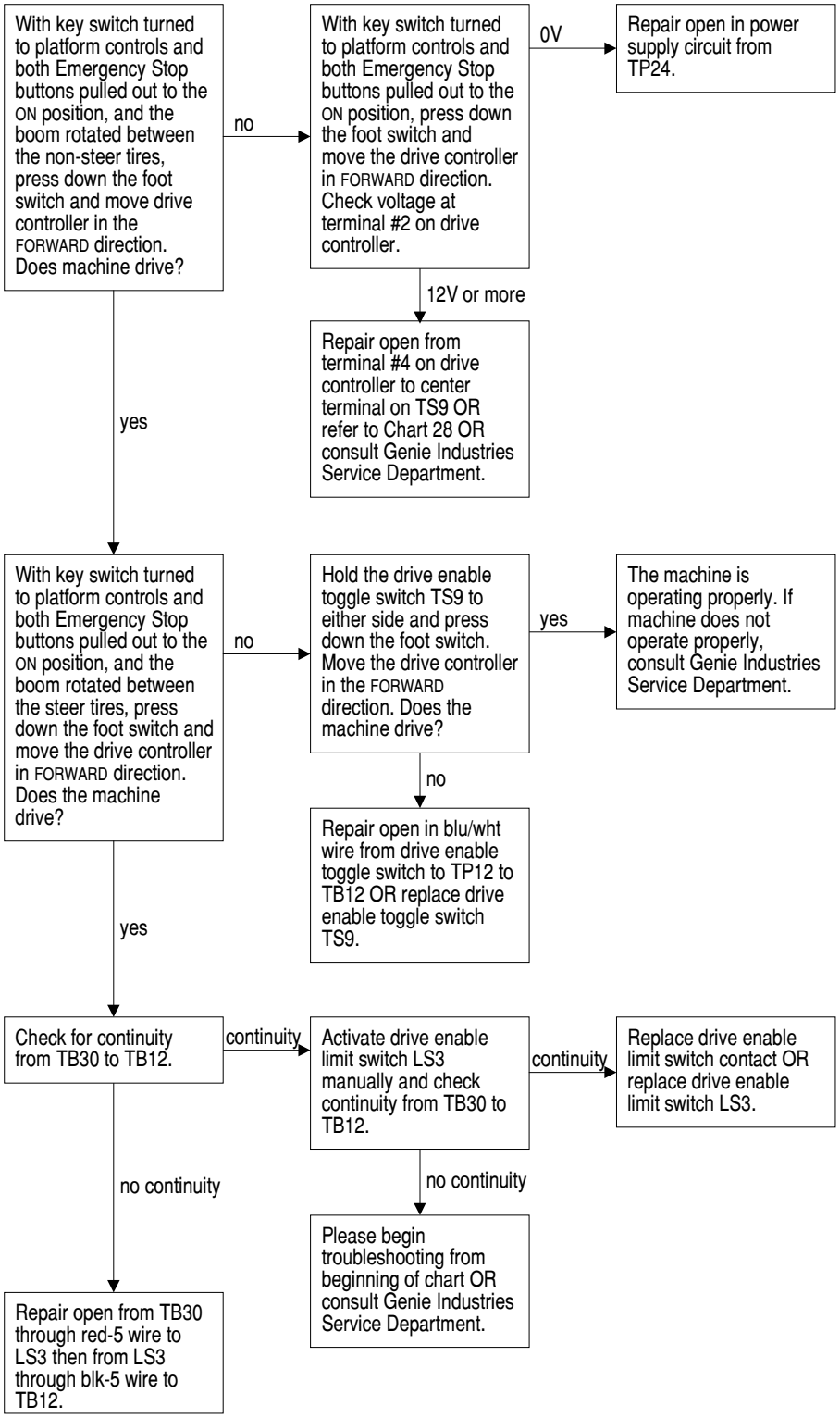

https://truckmanualshub.com/

Chart 37

Auxiliary Functions Inoperative

Be sure all other functions operate normally.

Be sure key switch is in the appropriate position and both Emergency Stop buttons are pulled out to the ON position.

Be sure engine is not running when using auxiliary power.

Note: Operating auxiliary power with the engine running should immediately stop the engine.

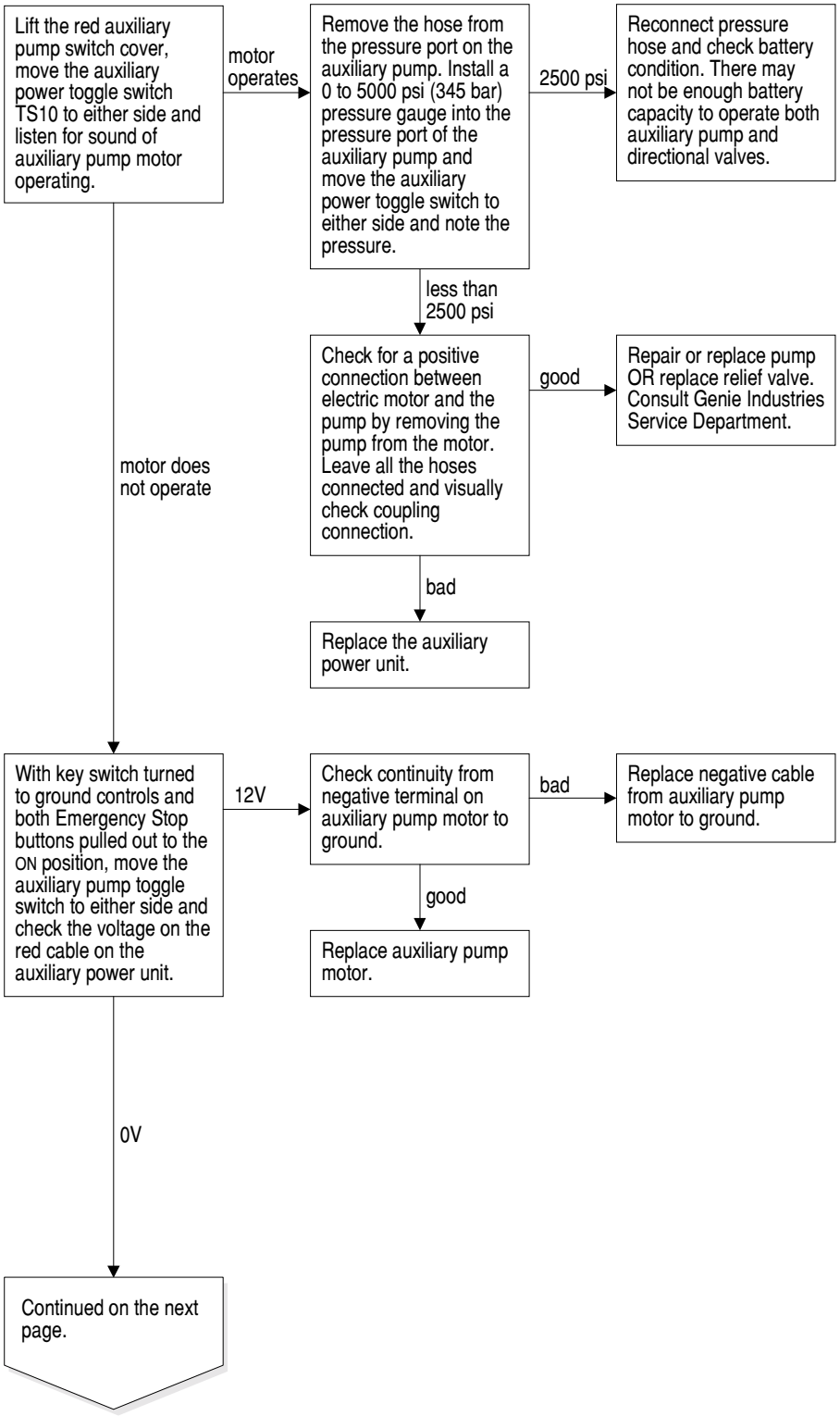

https://truckmanualshub.com/

CHART 37

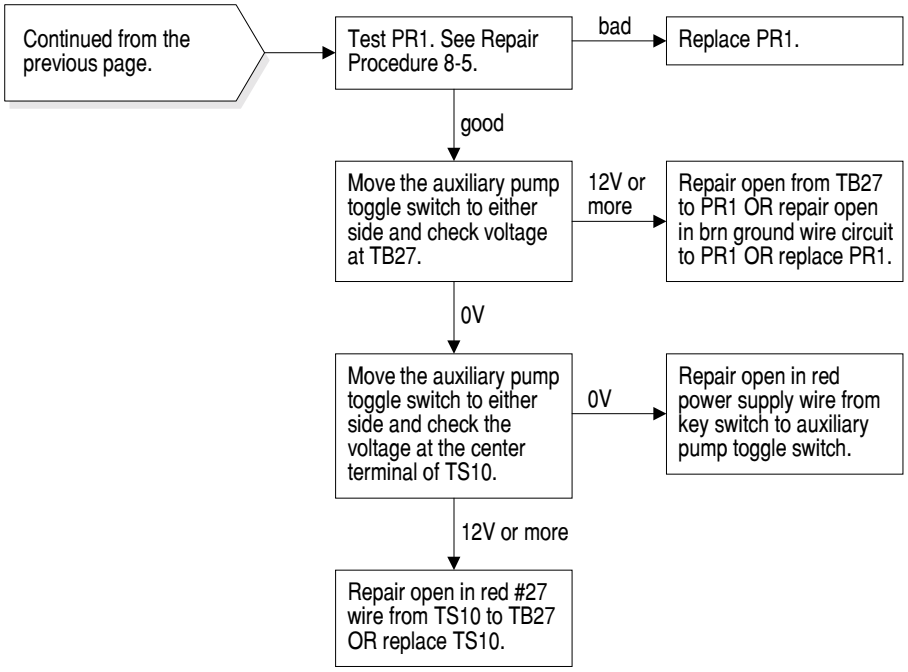

https://truckmanualshub.com/

Schematics

Observe and Obey:

- ☑ Troubleshooting and repair procedures shall be completed by a person trained and qualified on the repair of this machine.
- ☑ Immediately tag and remove from service a damaged or malfunctioning machine.
- ☑ Repair any machine damage or malfunction before operating the machine.

Before Troubleshooting:

- ☑ Read, understand and obey the safety rules and operating instructions printed in the appropriate *Genie S-80 and Genie S-85 Operator's Manual.*
- ☑ Be sure that all necessary tools and test equipment are available and ready for use.

About This Section

There are two groups of schematics in this section. An illustration legend precedes each group of drawings.

Electrical Schematics

⚠WARNING Electrocution hazard. Contact with electrically charged circuits may result in death or serious injury. Remove all rings, watches and other jewelry.

Hydraulic Schematics

⚠WARNING Bodily injury hazard. Spraying hydraulic oil can penetrate and burn skin. Loosen hydraulic connections very slowly to allow the oil pressure to dissipate gradually. Do not allow oil to squirt or spray.

General Repair Process

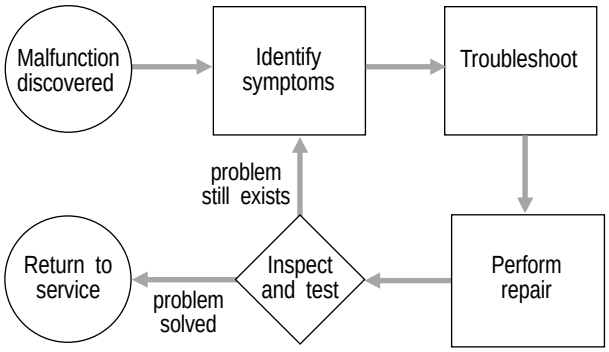

https://truckmanualshub.com/

Electrical Components

Item	Description	Genie Part Part Number	Manufacturer	Manufacturer Part Number	Qty
B	Battery, 1000 CCA, 12V DC	30143	Trojan	C31XH-2	1
BP2	Boom proportional controller (joystick), Single axis	24495	OEM Controls	EMS4M6883	1
BP1	Boom proportional controller (joystick), Dual axis	40613	OEM Controls	EJS5M10089	1
CB1, CB2	Circuit breaker	24018	ETA	45-700-IG1-P10	2
CR1 through CR8 and CR20	Relay, SPDT, 12V DC	34052	Potter-Brumfield	VF4-15F11-CO5	7
CR13, 14, 17, 18A ,18B and 19	Relay, SPDT, 12V DC	19274	Potter-Brumfield	VF4-45F11-CO5	5
Diode	Diode, 6 amp, 200 PIV	45782	Motorola	MOTMR752	36
DP1	Joystick controller-Drive	20424	OEM Controls	MCH1159AD1386	1
FB	Flashing beacon	20189	ECCO Electronic Controls	6400A-GEN	2
FS1	Footswitch	13482	Linemaster Switch Corp.	632-S	1
G1	Gauge - Voltage	53761	VDO	33203000IC	1
G2	Gauge - Oil Pressure	53758	VDO	350030021IC	1
G3	Gauge - Coolant Temp.	53759	VDO	310030023C	1
H1	Alarm, Warble tone	45383	Floyd Bell Inc.	MW209-530-Q	1
H2	Horn, 12V DC, 130 dB	56264	Wolo Ind. Horn and Signal	300ST-12GEN	1
H3	Alarm, intermittent	18963	Floyd Bell Inc.	XB-09-630-Q	1
H4	Alarm, chime tone	45462	Floyd Bell Inc.	CH-09-525-Q	1
HM	Hourmeter	19506	ENM Corporation	T40A4508	1
KS1	Contact - Keyswitch, N.O.	45081	Telemecanique	ZB2-BE101	2
L1	LED - Red, 12V DC	32335	Arctolectric Corp.	LE177C39007	3
LS1, 2, 3	Contact - Limit switch, N.C.H.O.	19491	Telemecanique	XESP2151	3
Level sensor	Level sensor, 4.5°	44586	Power Comp. of Midwest	LS36-04.5L1.501	1
P1, P2	Contact, N.C.	29732	Telemecanique	ZB2-BE102	2

https://truckmanualshub.com/

ELECTRICAL COMPONENTS

This list continues on the next page.

Item	Description	Genie Part Part Number	Manufacturer	Manufacturer Part Number	Qty
P3	Contact, N.O.	45081	Telemecanique	ZB2-BE101	1
PR1	Relay, 12V DC continuous	27155	Stancor	70-902	1
R1	Resistor,				
	100Ω 25 watt (4WD)	27116	Dale	RH25-100R-1%	1
	150Ω 25 watt (2WD)	34798	Dale	RH25-150R-1%	1
R2	Resistor, 14Ω 25 watt	46678	Dale	RH25-14R-1%	1
R3	Resistor, 10Ω 25 watt	27287	Dale	RH25-10R-1%	1
TS1, TS10	Toggle switch, DPST				
	2 position momentary	13480	Microswitch Control Inc.	2NT1-8	2
TS2, 6, 9, 11, 13, 15	Toggle switch, SPDT				
	3 position momentary	13037	Microswitch Control Inc.	1NT1-7	6
TS8, TS20	Toggle switch, DPST				
	2 position maintained	27378	Microswitch Control Inc.	2NT1-3	2
TS4	Toggle switch, DPDT				
	3 position maintained	13038	Microswitch Control Inc.	2NT1-1	1
TS5,7,14,16, 17,18, 19	Toggle switch, DPDT				
	3 position momentary	16397	Microswitch Control Inc.	2NT1-7	7
TS3, TS12 (Gas/LPG)	Toggle switch, DPST				
	2 position maintained	27378	Microswitch Control Inc.	2NT1-3	2
TS3, TS12 (Diesel)	Toggle switch, SPDT				
	3 position momentary	13037	Microswitch Control Inc.	1NT1-7	2

https://truckmanualshub.com/

Electrical Symbols Legend

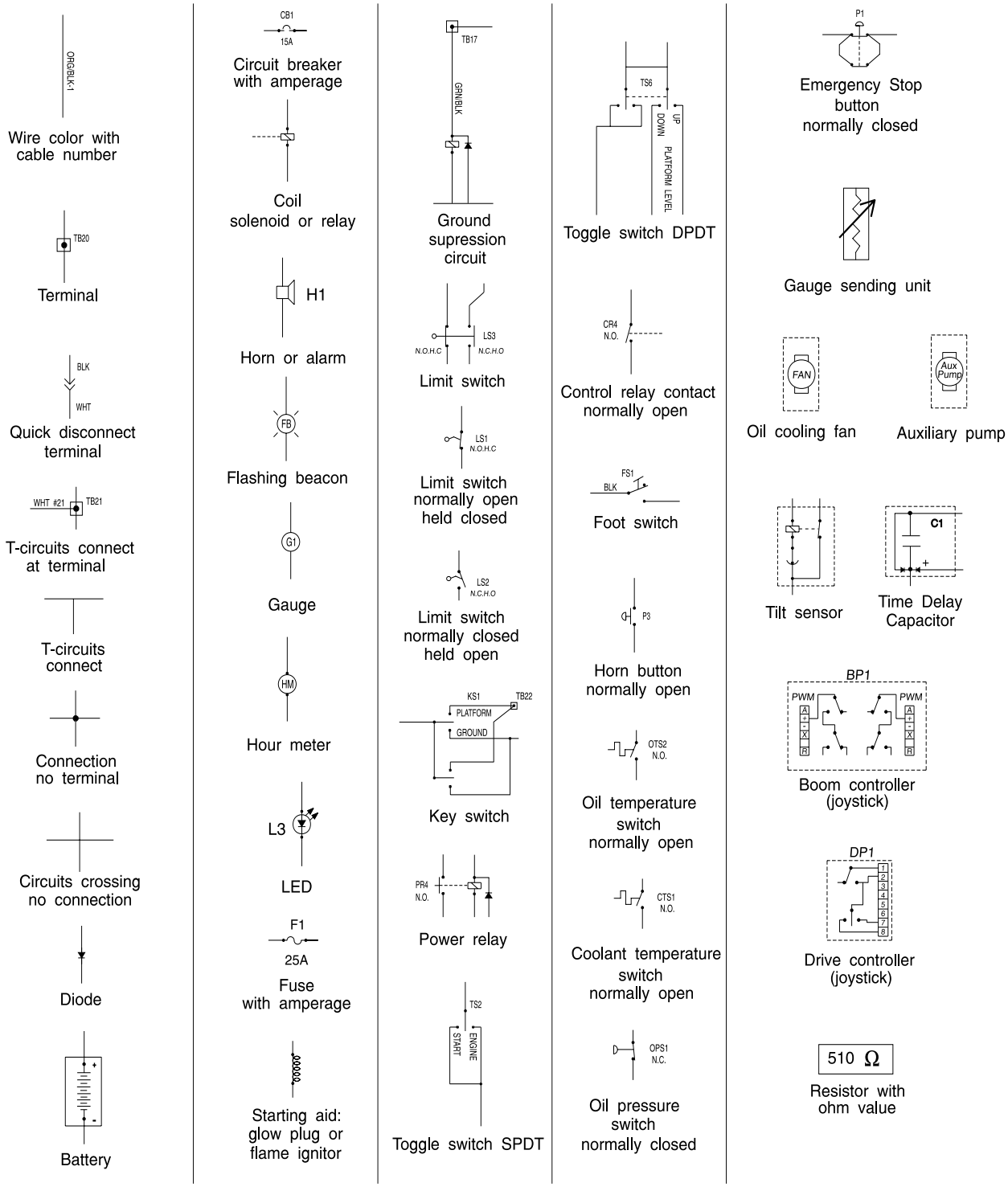

https://truckmanualshub.com/

Abbreviation Legend

LABEL	DESCRIPTION
B	Battery
BP	Boom proportional controller (joystick)
C	Capacitor, delay
CB	Circuit breaker with amperage
CR	Control relay
CTS	Coolant temperature switch
DP	Drive proportional controller (joystick)
F	Fuse with amperage
FB	Flashing beacon(s)
FS	Foot switch
G	Gauge
H	Horn or Alarm
HM	Hour meter
KS	Key switch
L	LED
LS	Limit switch
OPS	Oil pressure switch
OTS	Oil temperature switch
P	Emergency stop button
PR	Power relay
R	Resistor with ohm value
TB	Terminal base location
TP	Terminal platform location
TS	Toggle switch

https://truckmanualshub.com/

Ford LRG-425 EFI
Engine Wiring Harness

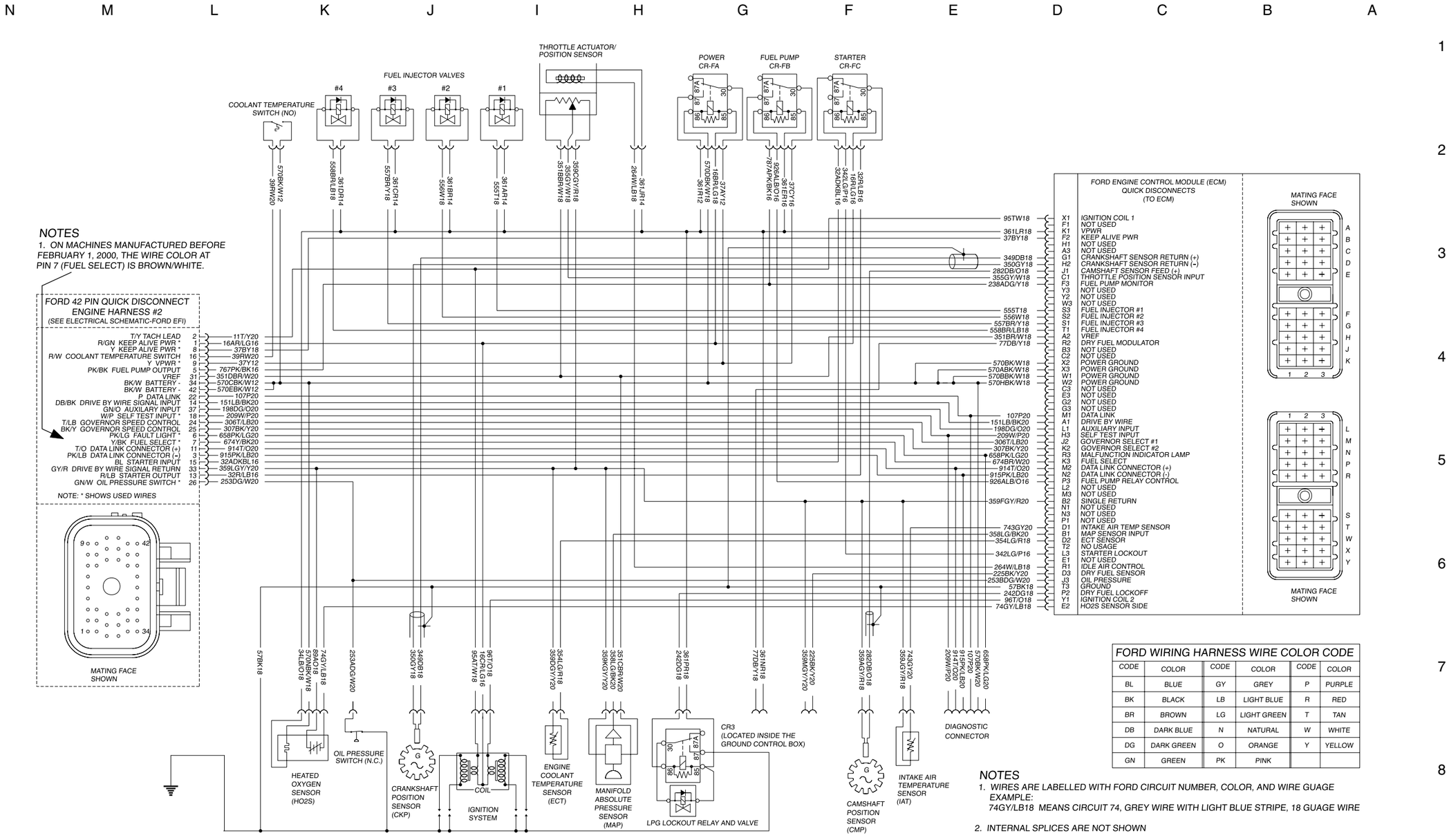

FORD WIRING HARNESS WIRE COLOR CODE					
CODE	COLOR	CODE	COLOR	CODE	COLOR
BL	BLUE	GY	GREY	P	PURPLE
BK	BLACK	LB	LIGHT BLUE	R	RED
BR	BROWN	LG	LIGHT GREEN	T	TAN
DB	DARK BLUE	N	NATURAL	W	WHITE
DG	DARK GREEN	O	ORANGE	Y	YELLOW
GN	GREEN	PK	PINK		

NOTES

1. WIRES ARE LABELLED WITH FORD CIRCUIT NUMBER, COLOR, AND WIRE GUAGE
   EXAMPLE:
   74GY/LB18 MEANS CIRCUIT 74, GREY WIRE WITH LIGHT BLUE STRIPE, 18 GUAGE WIRE
2. INTERNAL SPLICES ARE NOT SHOWN

https://truckmanualshub.com/

Electrical Schematic-
Ford Models

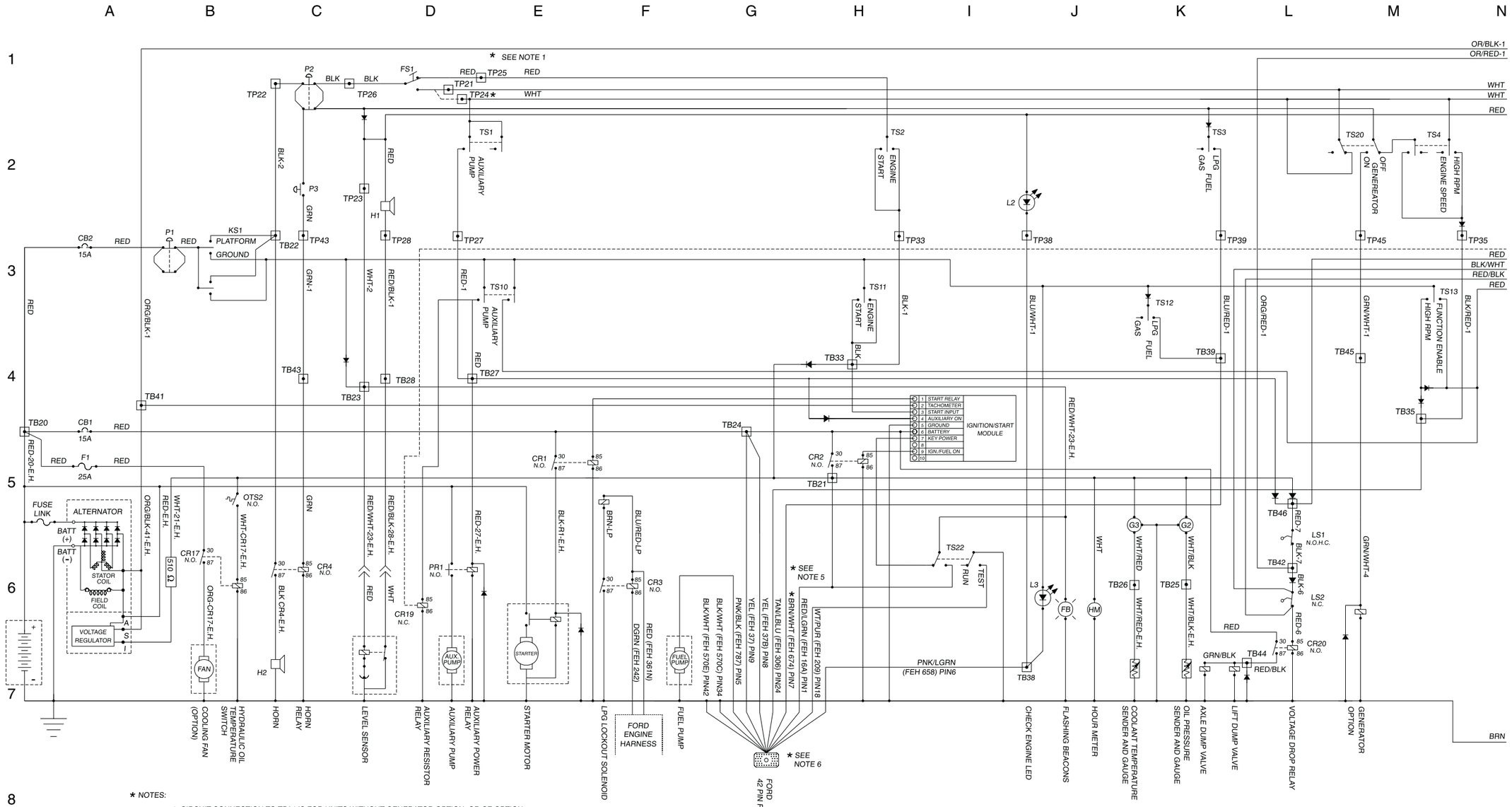

* NOTES:

1. CIRCUIT CONNECTION TO TP24 IS FOR UNITS WITHOUT GENERATOR OPTION, OR CE OPTION.
2. THE FOOT SWITCH POWER IS CONNECTED TO BOTH WHT WIRES FOR UNITS WITHOUT THE LIFT/DRIVE SELECTOR OPTION.
3. ALL SWITCHES AND CONTACTS ARE SHOWN WITH THE BOOM IN STOWED POSITION AND THE KEY SWITCH OFF.
4. R1: 100 OHM RESISTOR FOR 4WD, R1: 150 OHM RESISTOR FOR 2WD.
5. MACHINES MANUFACTURED AFTER 2-1-2000 WIRE COLOR CHANGED TO BRN/WHT.
6. REFER TO PAGE 6-7 FOR FORD ENGINE HARNESS WIRING DIAGRAM.

https://truckmanualshub.com/

Electrical Schematic-
Ford Models

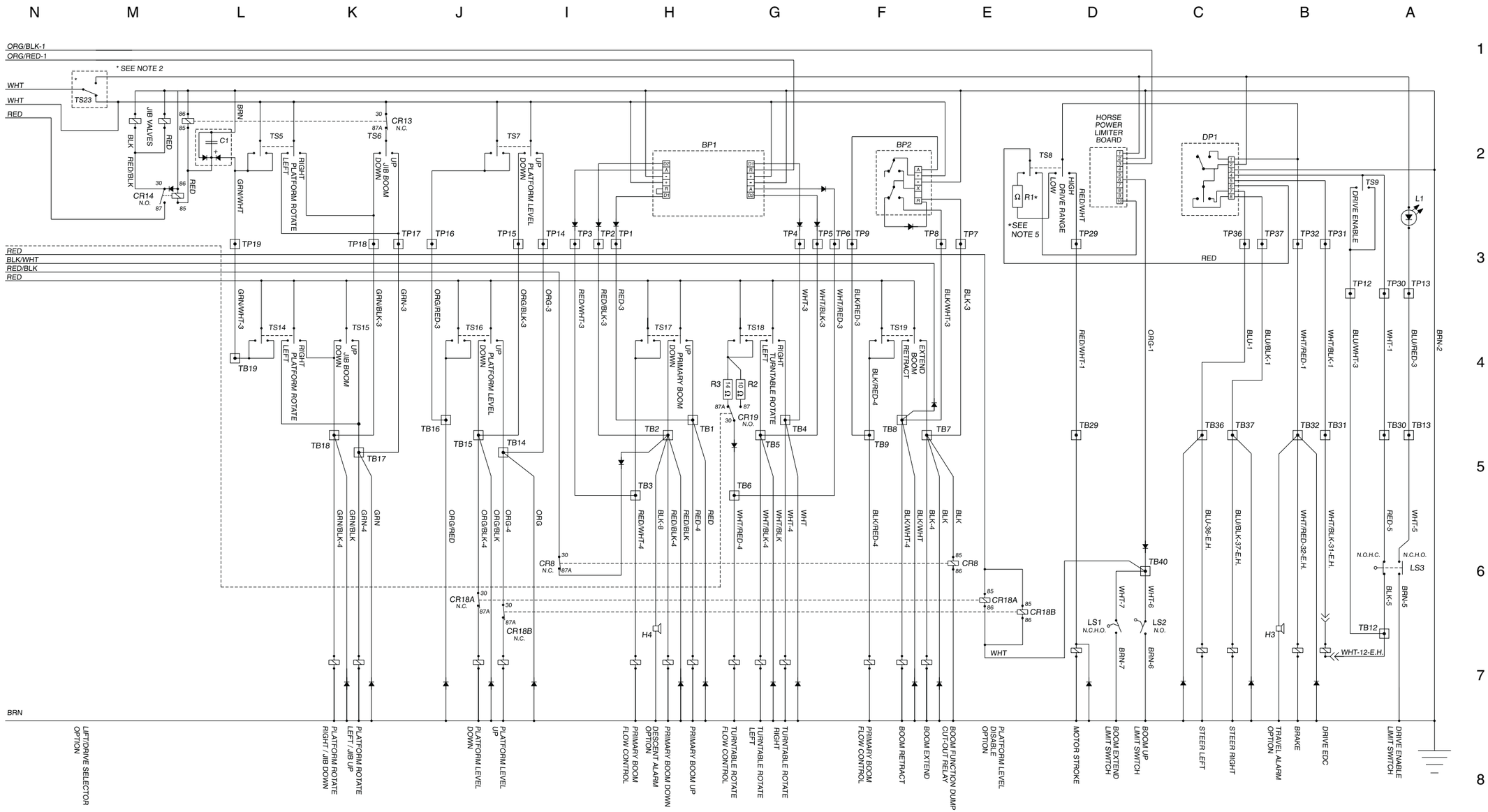

https://truckmanualshub.com/

Ground Control Box Wiring Diagram- Ford Models

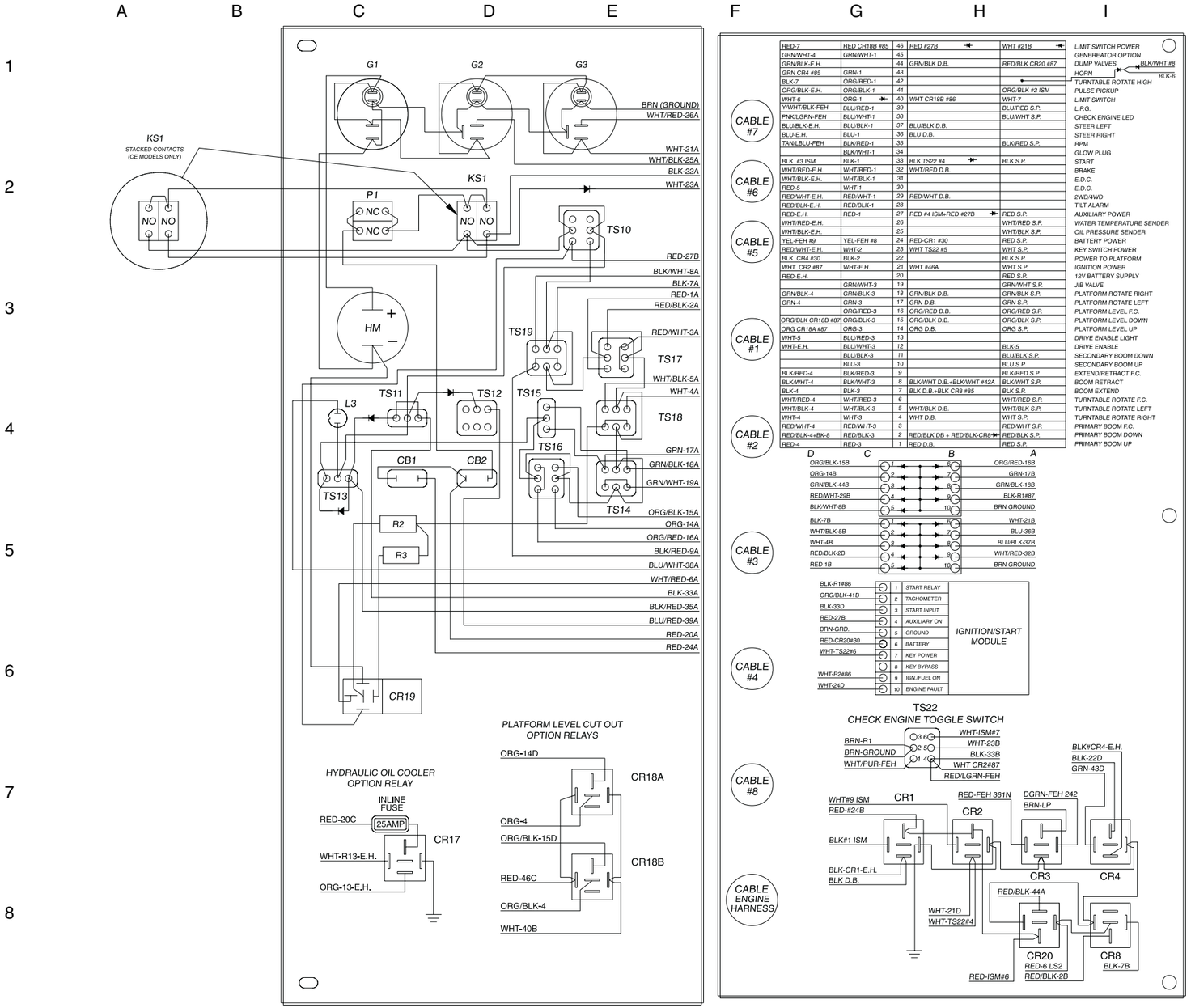

LABEL	DESCRIPTION
(CABLE#1)	TO PLATFORM CONTROL BOX, TERMINAL 27-46
(CABLE#2)	TO PLATFORM CONTROL BOX, TERMINAL 22-23
(CABLE#3)	TO PLATFORM CONTROL BOX, TERMINAL 1-19
(CABLE#4)	TO CONTROL SOLENOID
CB1	CIRCUIT BREAKER, CONTROLS, 15A
CB2	CIRCUIT BREAKER, ENGINE, 15A
CR1	IGNITION/START RELAY
CR2	IGNITION/POWER RELAY
CR3	L.P.G. LOCKOUT RELAY
CR4	HORN RELAY
CR8	BOOM FUNCTION CUT OUT
CR17	HYDRAULIC OIL COOLER RELAY (OPTION)
CR18A & B	PLATFORM LEVEL CUTOUT RELAY (CE OPTION)
CR19	AUXILIARY RESISTOR RELAY
CR20	VOLTAGE DROP RELAY
F.C.	FLOW CONTROL
G1	VOLT METER GAUGE
G2	OIL PRESSURE GAUGE
G3	WATER TEMPERATURE GAUGE
HM	HOUR METER
KS1	KEY SWITCH
L3	CHECK ENGINE LED
LS1 (CABLE#7)	BOOM EXTEND LIMIT SWITCH
LS2 (CABLE#6)	BOOM UP LIMIT SWITCH
LS3 (CABLE#5)	DRIVE ENABLE LIMIT SWITCH
P1	EMERGENCY STOP BUTTON
PR1	AUXILARY POWER RELAY
PR2	STARTING AID POWER RELAY (DIESEL ONLY)
R2	RESISTOR, 10 OHM, BOOM FUNCTIONS
R3	RESISTOR, 14 OHM, TURNTABLE ROTATE
TS10	AUXILIARY SWITCH
TS11	ENGINE START SWITCH
TS12	ENGINE FUEL SELECT SWITCH
TS13	FUNCTION ENABLE SWITCH
TS14	PLATFORM ROTATE SWITCH
TS15	JIB BOOM SWITCH
TS16	PLATFORM LEVEL SWITCH
TS17	PRIMARY BOOM UP/DOWN SWITCH
TS18	TURNTABLE ROTATE SWITCH
TS19	BOOM EXTEND/RETRACT SWITCH

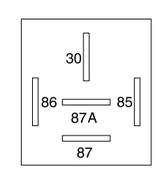

86 - COIL (+)
85 - COIL (-)
30 - COMMON (COM)
87 - NORMALLY OPEN (NO)
87A - NORMALLY CLOSED (NC)

https://truckmanualshub.com/

Platform Control Box Wiring Diagram- Ford Models

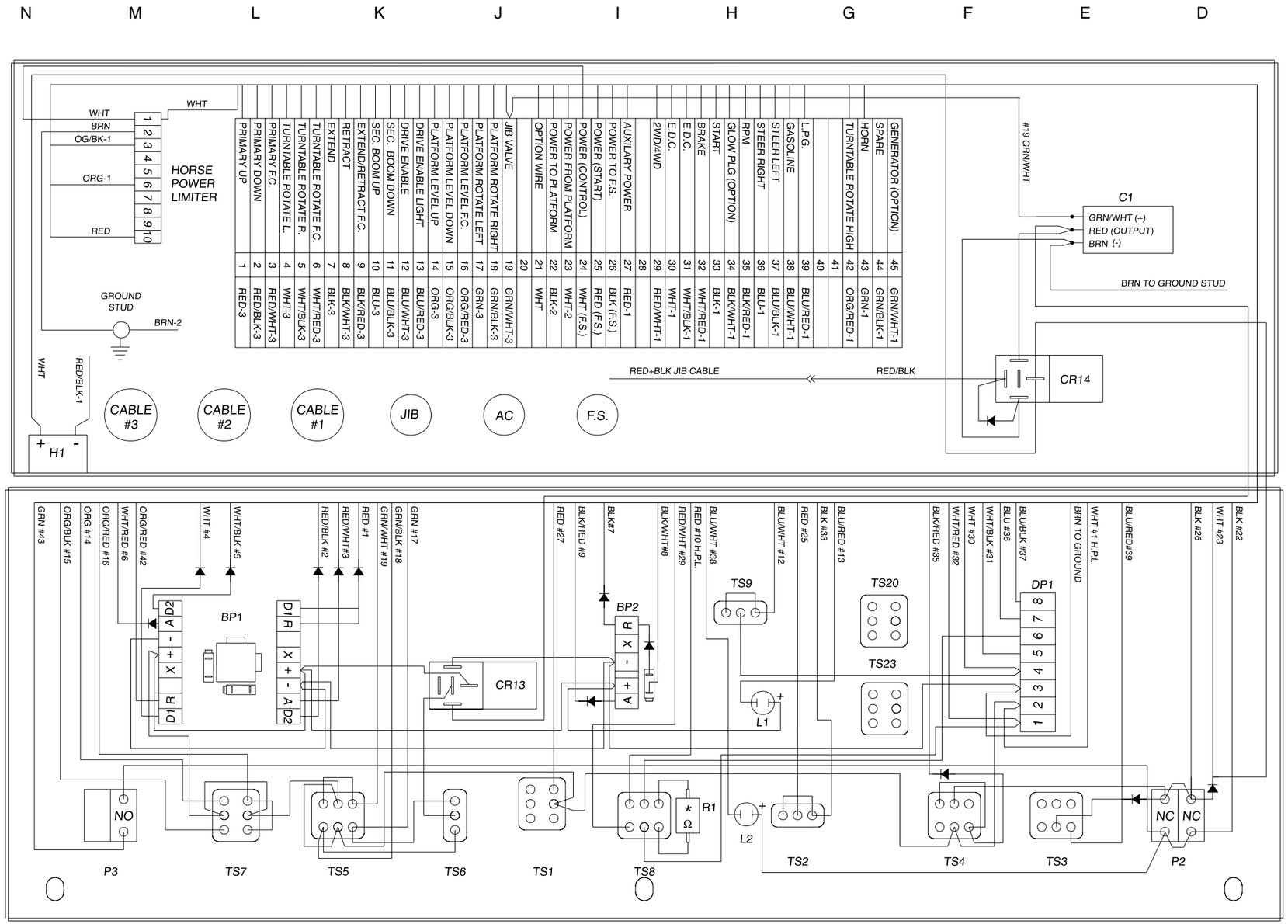

LABEL	DESCRIPTION
BP1	BOOM PROPORTIONAL CONTROLLER PRIMARY BOOM UP/DOWN & TURNTABLE ROTATE
BP2	BOOM PROPORTIONAL CONTROLLER EXTEND/RETRACT
CABLE#1	FROM GROUND CONTROL BOX, TERMINALS 27-45
CABLE#2	FROM GROUND CONTROL BOX, TERMINALS 22-23
CABLE#3	FROM GROUND CONTROL BOX, TERMINALS 1-19
C1	DELAY CAPACITOR
CR13	JIB LOCKOUT RELAY
CR14	PLATFORM ROTATOR RELAY
DP1	DRIVE PROPORTIONAL CONTROLLER STEER LEFT/ RIGHT
F.S.	CABLE FROM FOOT SWITCH
H.P.L.	HORSEPOWER LIMITER BOARD
H1	TILT ALARM
JIB	CABLE FOR JIB FUNCTION
L1	DRIVE ENABLE LED
L2	CHECK ENGINE LED
P2	EMERGENCY STOP BUTTON
P3	HORN BUTTON
R1	RESISTOR
TS1	AUXILIARY SWITCH
TS2	START ENGINE SWITCH
TS3	ENGINE FUEL SELECT SWITCH
TS4	HIGH RPM SWITCH
TS5	PLATFORM ROTATE LEFT/RIGHT SWITCH
TS6	JIB BOOM UP/DOWN SWITCH
TS7	PLATFORM LEVEL UP/DOWN SWITCH
TS8	DRIVE SPEED SELECT SWITCH
TS9	DRIVE ENABLE SWITCH
TS20	GENERATOR SWITCH (OPTION)
TS23	LIFT/DRIVE SELECT SWITCH (OPTION)
AC	AC POWER CABLE

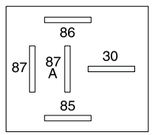

86 - COIL (+)
85 - COIL (-)
30 - COMMON (COM)
87 - NORMALLY OPEN (N.O.)
87A - NORMALLY CLOSED (N.C.)

*NOTE: RESISTOR IS MOUNTED TO EXTEND/RETRACT CONTROLLER.
1OO OHM RESISTOR FOR 4WD, 150 OHM RESISTOR FOR 2WD.

https://truckmanualshub.com/

Electrical Schematic-
Deutz Models

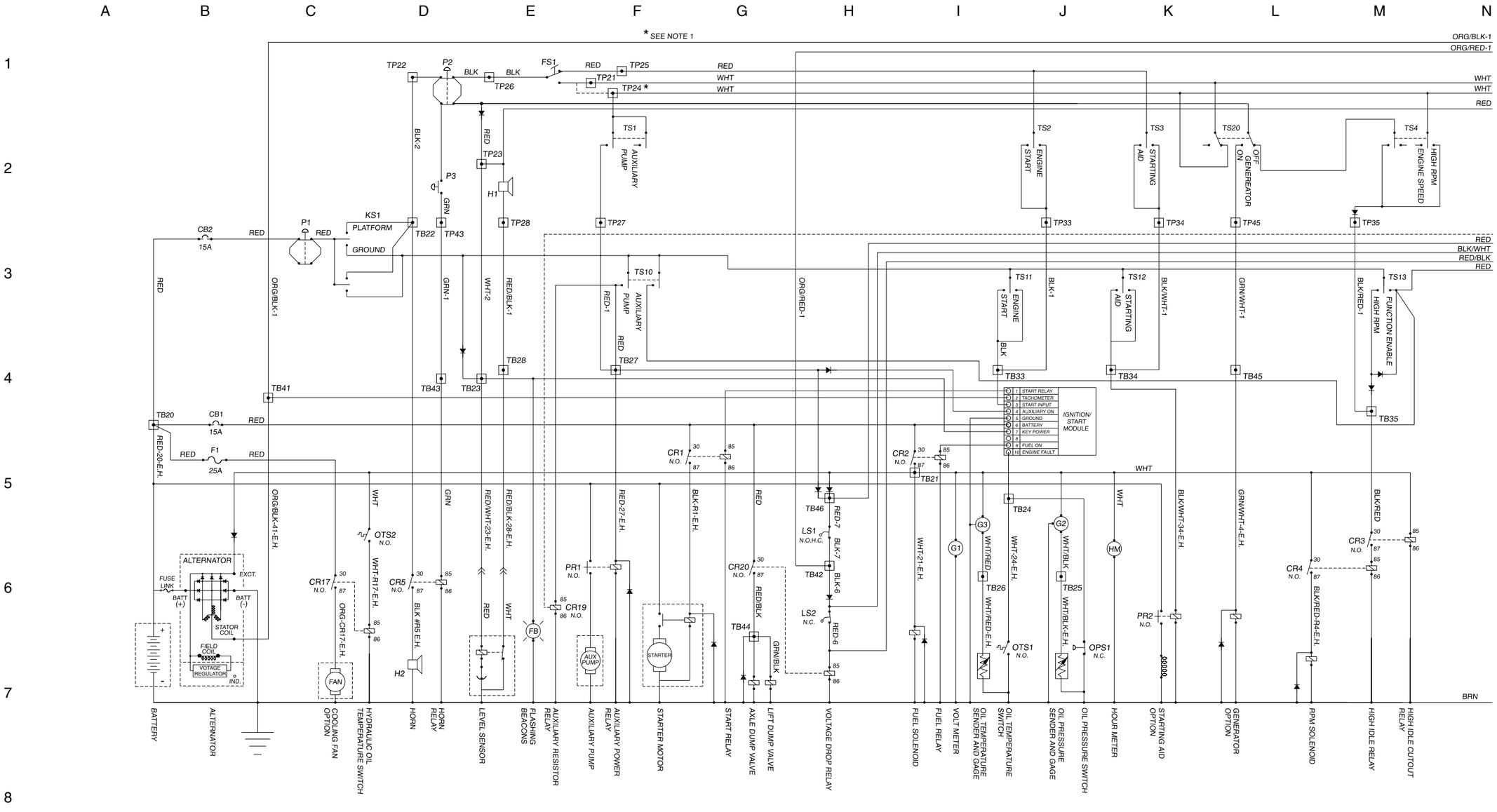

* NOTES:

1. CIRCUIT CONNECTION TO TP24 IS FOR UNITS WITHOUT GENERATOR OPTION, OR CE OPTION..
2. THE FOOT SWITCH POWER IS CONNECTED TO BOTH WHT WIRES WITHOUT THE LIFT/DRIVE SELECTOR OPTION.
3. ALL SWITCHES AND CONTACTS ARE SHOWN WITH THE BOOM IN STOWED POSISTION AND THE KEY SWITCH OFF.
4. R1: 100 OHM RESISTOR FOR 4WD, R1: 150 OHM RESISTOR FOR 2WD.

https://truckmanualshub.com/

Electrical Schematic-
Deutz Models

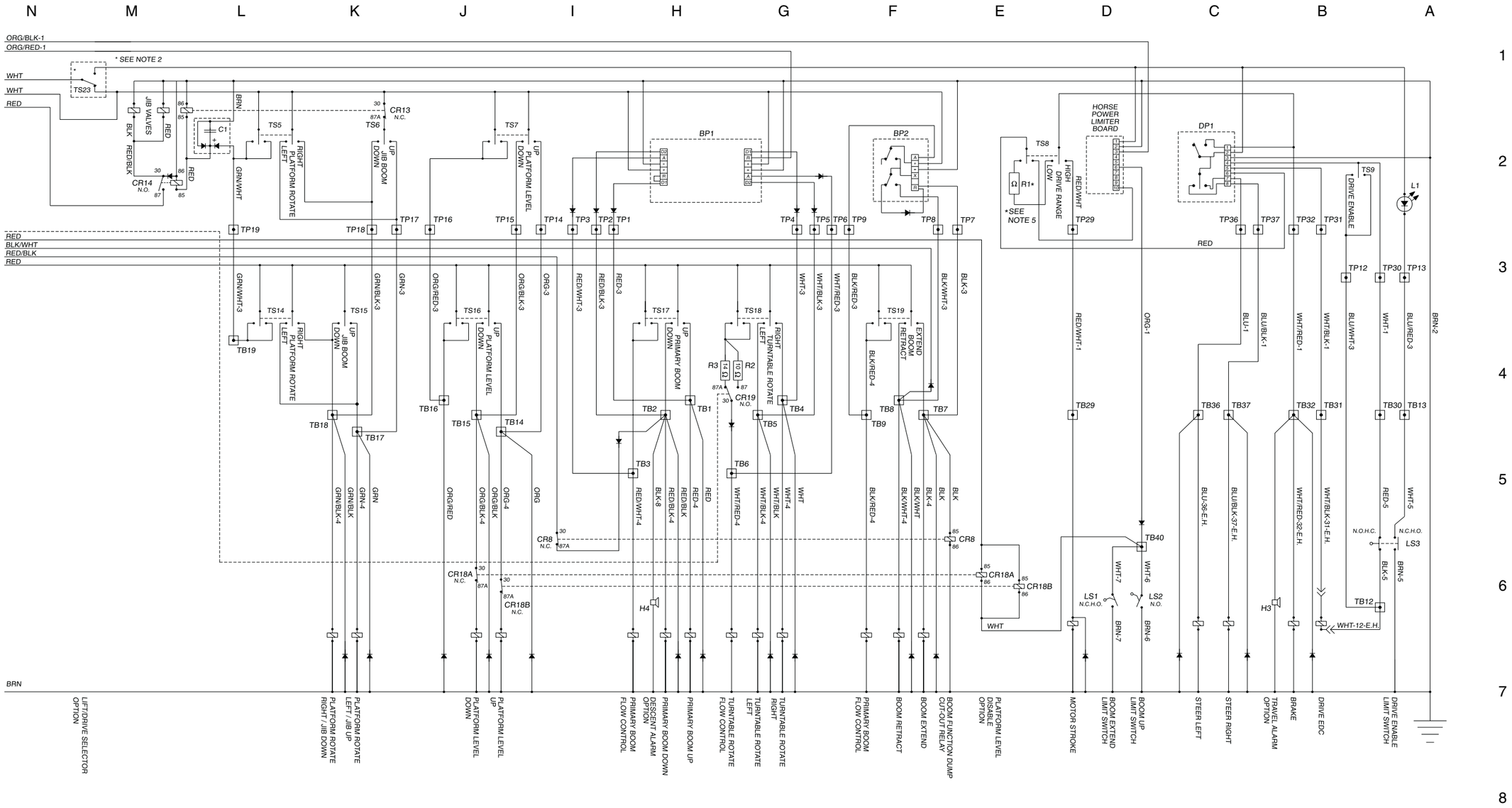

https://truckmanualshub.com/

Ground Control Box Wiring Diagram- Deutz Models

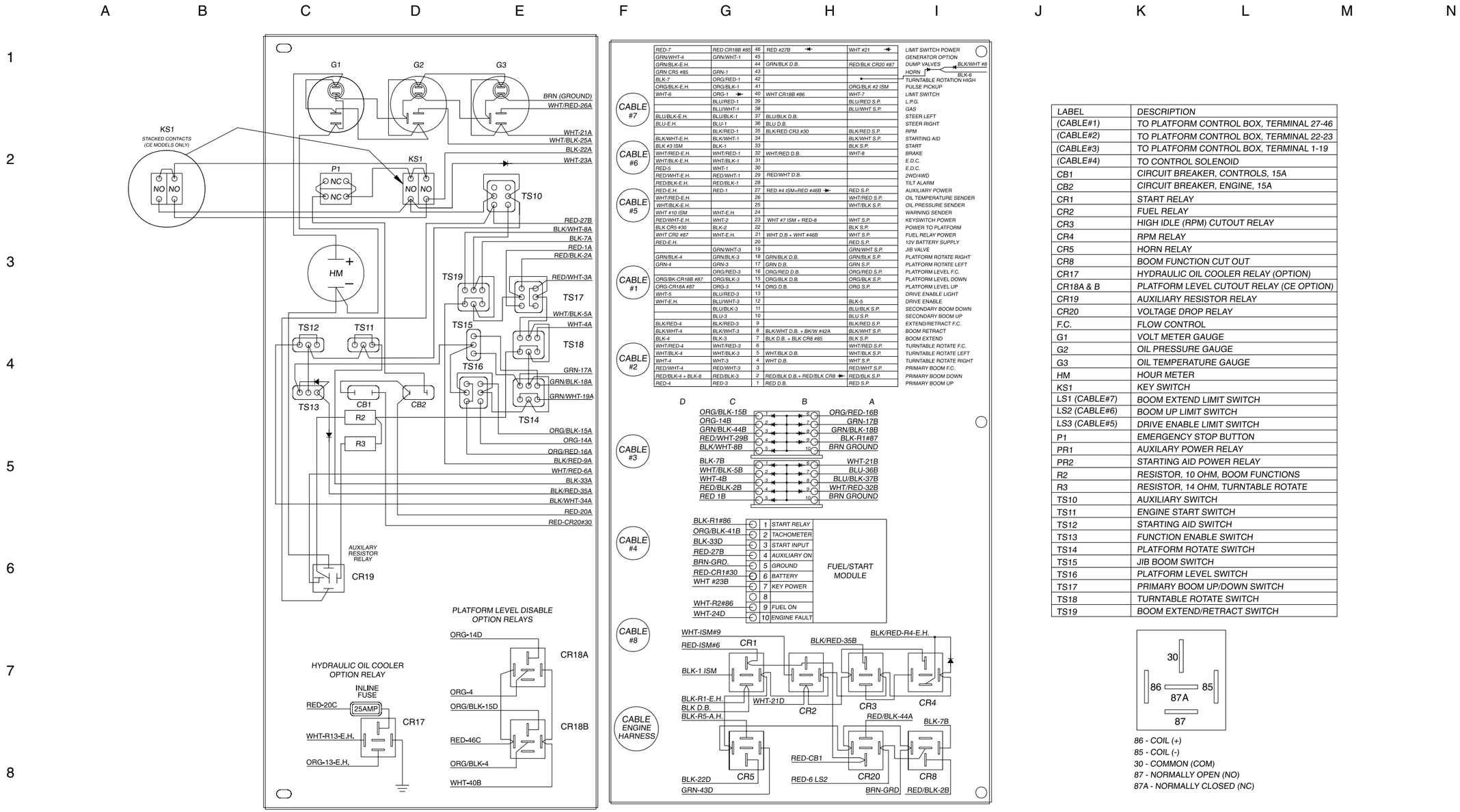

LABEL	DESCRIPTION
(CABLE#1)	TO PLATFORM CONTROL BOX, TERMINAL 27-46
(CABLE#2)	TO PLATFORM CONTROL BOX, TERMINAL 22-23
(CABLE#3)	TO PLATFORM CONTROL BOX, TERMINAL 1-19
(CABLE#4)	TO CONTROL SOLENOID
CB1	CIRCUIT BREAKER, CONTROLS, 15A
CB2	CIRCUIT BREAKER, ENGINE, 15A
CR1	START RELAY
CR2	FUEL RELAY
CR3	HIGH IDLE (RPM) CUTOUT RELAY
CR4	RPM RELAY
CR5	HORN RELAY
CR8	BOOM FUNCTION CUT OUT
CR17	HYDRAULIC OIL COOLER RELAY (OPTION)
CR18A & B	PLATFORM LEVEL CUTOUT RELAY (CE OPTION)
CR19	AUXILIARY RESISTOR RELAY
CR20	VOLTAGE DROP RELAY
F.C.	FLOW CONTROL
G1	VOLT METER GAUGE
G2	OIL PRESSURE GAUGE
G3	OIL TEMPERATURE GAUGE
HM	HOUR METER
KS1	KEY SWITCH
LS1 (CABLE#7)	BOOM EXTEND LIMIT SWITCH
LS2 (CABLE#6)	BOOM UP LIMIT SWITCH
LS3 (CABLE#5)	DRIVE ENABLE LIMIT SWITCH
P1	EMERGENCY STOP BUTTON
PR1	AUXILARY POWER RELAY
PR2	STARTING AID POWER RELAY
R2	RESISTOR, 10 OHM, BOOM FUNCTIONS
R3	RESISTOR, 14 OHM, TURNTABLE ROTATE
TS10	AUXILIARY SWITCH
TS11	ENGINE START SWITCH
TS12	STARTING AID SWITCH
TS13	FUNCTION ENABLE SWITCH
TS14	PLATFORM ROTATE SWITCH
TS15	JIB BOOM SWITCH
TS16	PLATFORM LEVEL SWITCH
TS17	PRIMARY BOOM UP/DOWN SWITCH
TS18	TURNTABLE ROTATE SWITCH
TS19	BOOM EXTEND/RETRACT SWITCH

86 - COIL (+)
85 - COIL (-)
30 - COMMON (COM)
87 - NORMALLY OPEN (NO)
87A - NORMALLY CLOSED (NC)

https://truckmanualshub.com/

Platform Control Box Wiring Diagram- Deutz Models

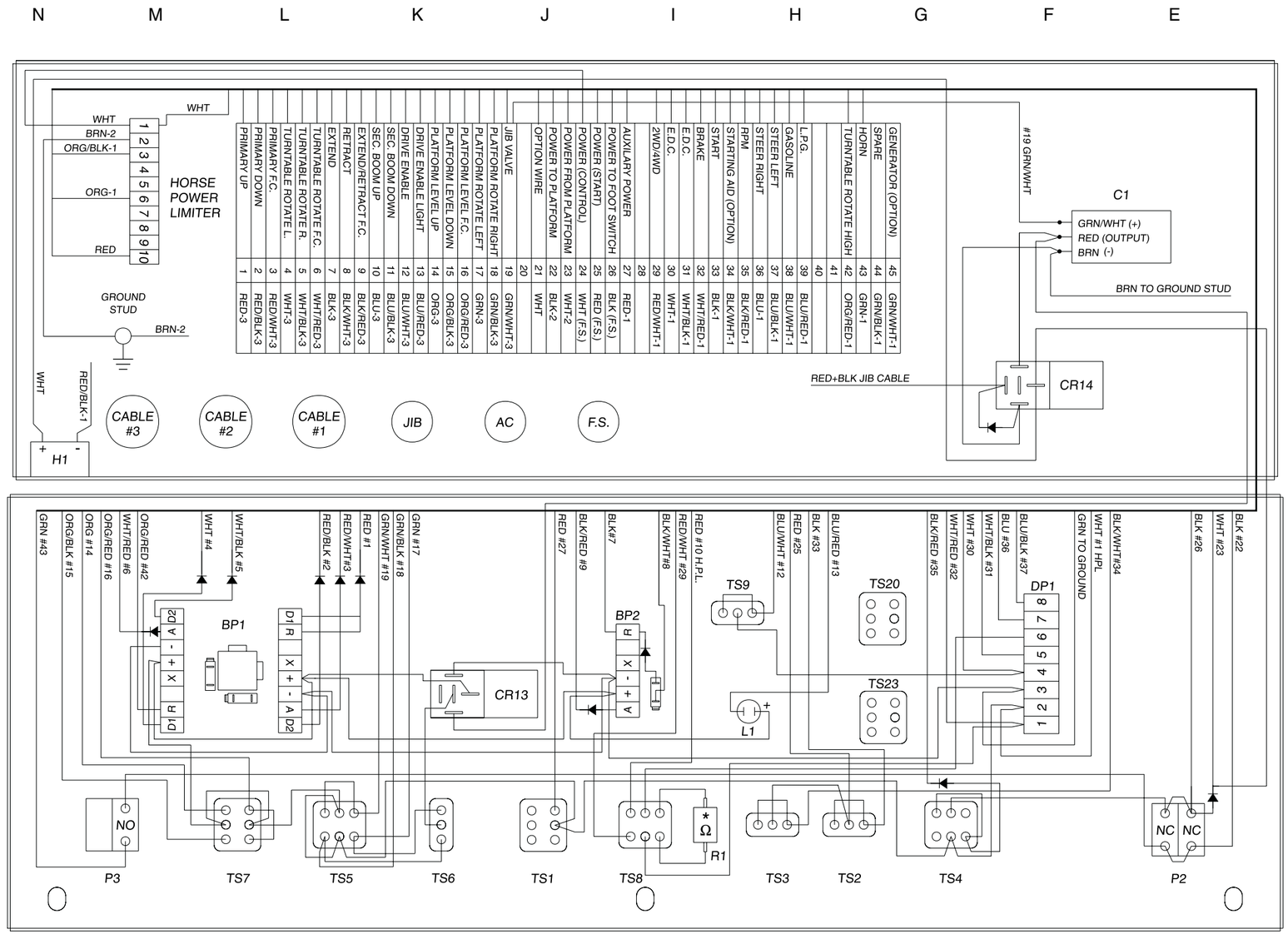

LABEL	DESCRIPTION
BP1	BOOM PROPORTIONAL CONTROLLER PRIMARY BOOM UP/DOWN & TURNTABLE ROTATE
BP2	BOOM PROPORTIONAL CONTROLLER EXTEND/RETRACT
CABLE#1	FROM GROUND CONTROL BOX, TERMINALS 27-45
CABLE#2	FROM GROUND CONTROL BOX, TERMINALS 22-23
CABLE#3	FROM GROUND CONTROL BOX, TERMINALS 1-19
C1	DELAY CAPACITOR
CR13	JIB LOCKOUT RELAY
CR14	PLATFORM ROTATOR RELAY
DP1	DRIVE PROPORTIONAL CONTROLLER STEER LEFT/ RIGHT
F.S.	CABLE FROM FOOT SWITCH
H.P.L.	HORSEPOWER LIMITER BOARD
H1	TILT ALARM
JIB	CABLE FOR JIB FUNCTION
L1	DRIVE ENABLE LED
P2	EMERGENCY STOP BUTTON
P3	HORN BUTTON
R1	RESISTOR
TS1	AUXILIARY SWITCH
TS2	START ENGINE SWITCH
TS3	STARTING AID SWITCH (OPTION)
TS4	HIGH RPM SWITCH
TS5	PLATFORM ROTATE LEFT/RIGHT SWITCH
TS6	JIB BOOM UP/DOWN SWITCH
TS7	PLATFORM LEVEL UP/DOWN SWITCH
TS8	DRIVE SPEED SELECT SWITCH
TS9	DRIVE ENABLE SWITCH
TS20	GENERATOR SWITCH (OPTION)
TS23	LIFT/DRIVE SELECT SWITCH (OPTION)
AC	AC POWER CABLE

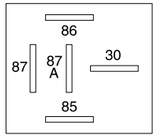

86 - COIL (+)
85 - COIL (-)
30 - COMMON (COM)
87 - NORMALLY OPEN (N.O.)
87A - NORMALLY CLOSED (N.C.)

* NOTE: R1 RESISTOR IS MOUNTED TO EXTEND/RETRACT CONTROLLER
100 OHM RESISTOR FOR 4WD AND 150 OHM RESISTOR FOR 2WD

https://truckmanualshub.com/

Electrical Schematic- Perkins Models

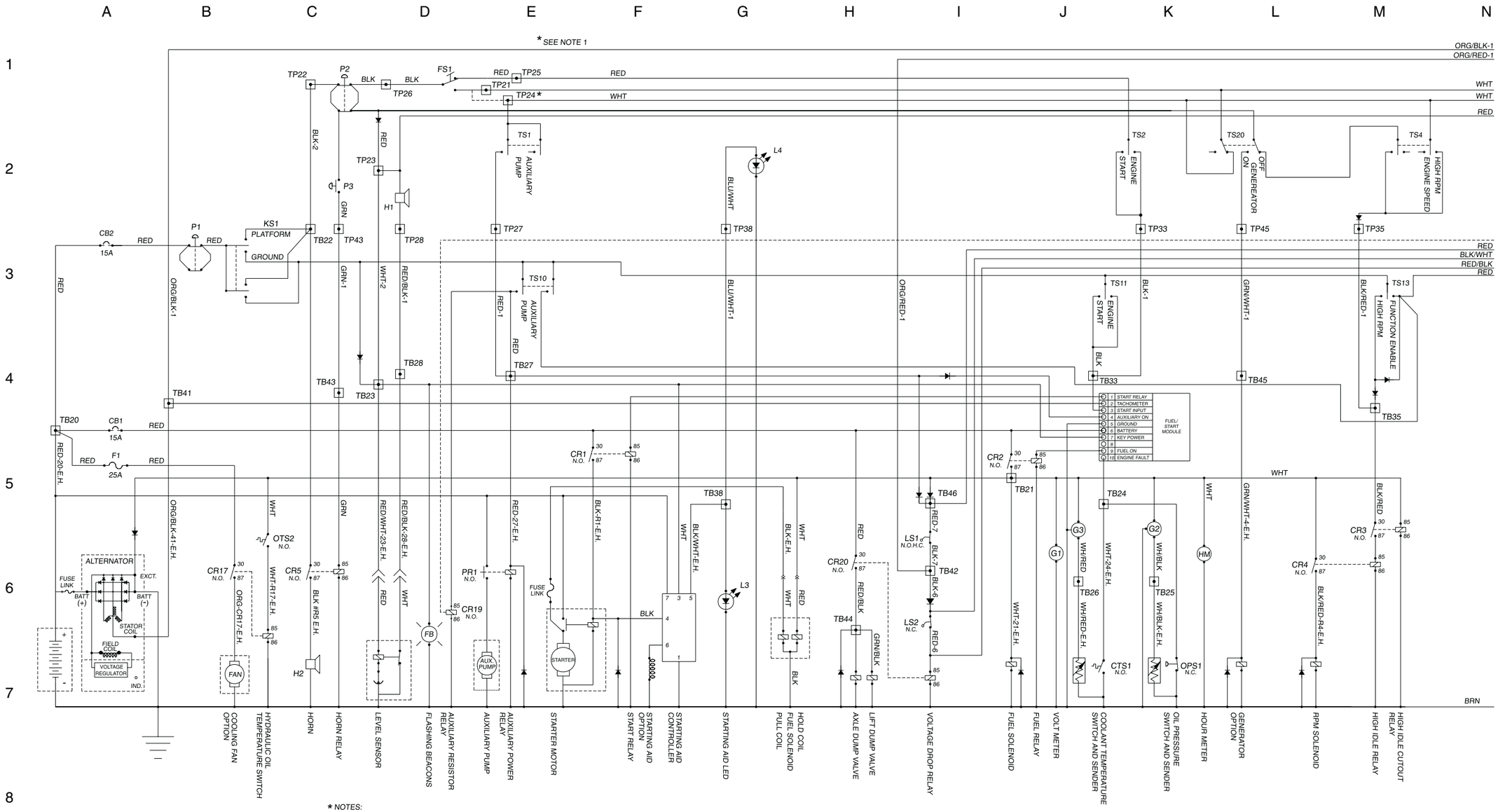

* NOTES:

1. CIRCUIT CONNECTION TO TP24 IS FOR UNITS WITHOUT GENERATOR OPTION OR CE OPTION.
2. THE FOOT SWITCH POWER IS CONNECTED TO BOTH WHT WIRES ON UNITS WITHOUT THE LIFT/DRIVE SELECTOR OPTION.
3. ALL SWITCHES AND CONTACTS ARE SHOWN WITH THE BOOM IN STOWED POSISTION AND THE KEY SWITCH OFF.
4. R1: 100 OHM RESISTOR FOR 4WD, R1: 150 OHM RESISTOR FOR 2WD.

https://truckmanualshub.com/

Electrical Schematic-
Perkins Models

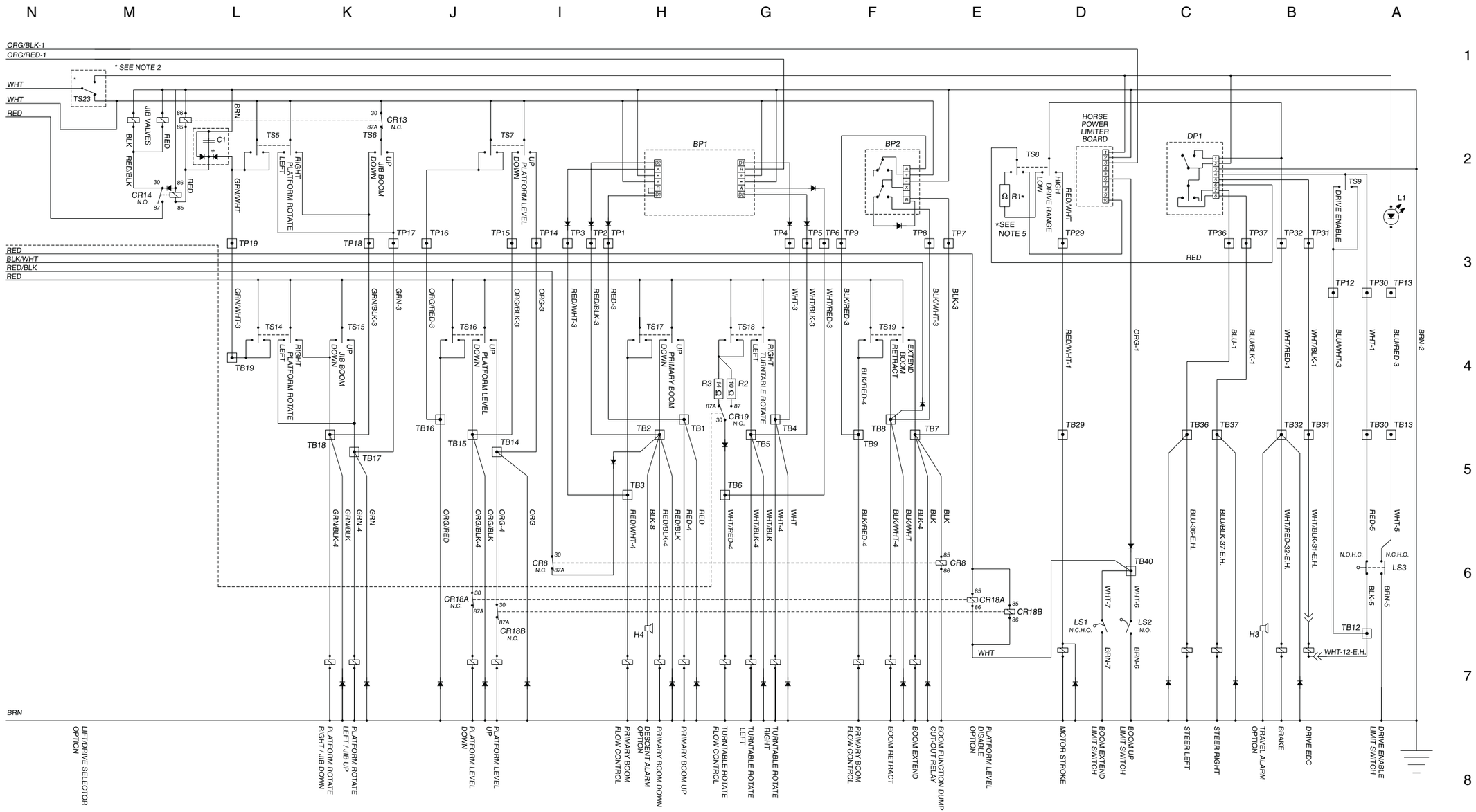

https://truckmanualshub.com/

Ground Control Box Wiring Diagram- Perkins Models

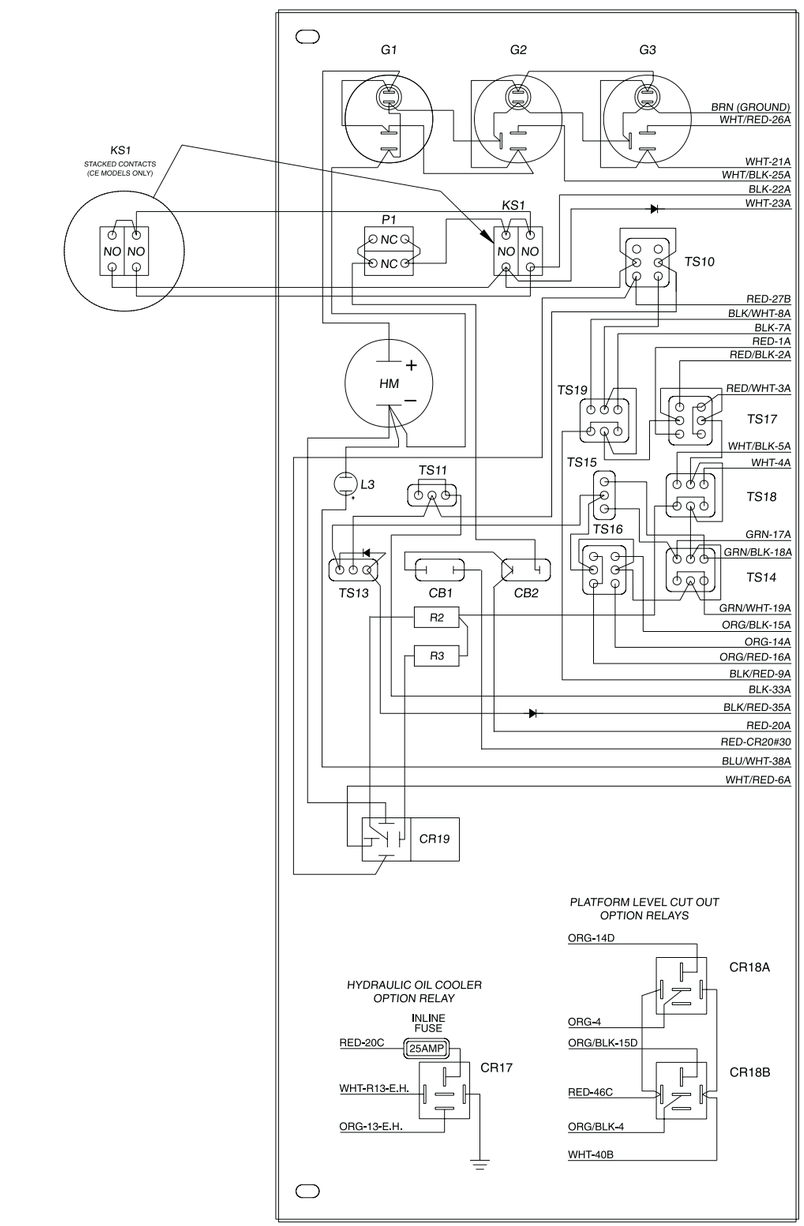

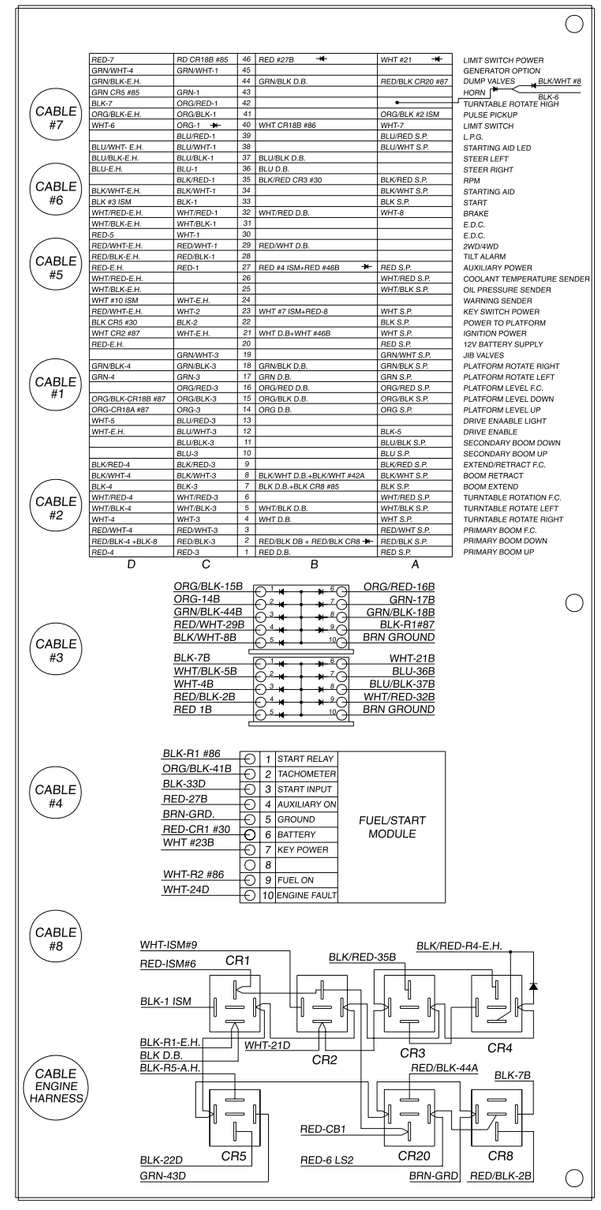

RED-7	RD CR18B #85	46	RED #27B	WHT #21	LIMIT SWITCH POWER
GRN/WHT-4	GRN/WHT-1	45			GENERATOR OPTION
GRN/BLK-E.H.		44	GRN/BLK D.B.	RED/BLK CR20 #87	DUMP VALVES / BLK/WHT #8
GRN CR5 #85	GRN-1	43			HORN / BLK-6
BLK-7	ORG/RED-1	42			TURNTABLE ROTATE HIGH
ORG/BLK-E.H.	ORG/BLK-1	41		ORG/BLK #2 ISM	PULSE PICKUP
WHT-6	ORG-1	40	WHT CR18B #86	WHT-7	LIMIT SWITCH
	BLU/RED-1	39		BLU/RED S.P.	L.P.G.
BLU/WHT- E.H.	BLU/WHT-1	38		BLU/WHT S.P.	STARTING AID LED
BLU/BLK-E.H.	BLU/BLK-1	37	BLU/BLK D.B.		STEER LEFT
BLU-E.H.	BLU-1	36	BLU D.B.		STEER RIGHT
	BLK/RED-1	35	BLK/RED CR3 #30	BLK/RED S.P.	RPM
BLK/WHT-E.H.	BLK/WHT-1	34		BLK/WHT S.P.	STARTING AID
BLK #3 ISM	BLK-1	33		BLK S.P.	START
WHT/RED-E.H.	WHT/RED-1	32	WHT/RED D.B.	WHT-8	BRAKE
WHT/BLK-E.H.	WHT/BLK-1	31			E.D.C.
RED-5	WHT-1	30			E.D.C.
RED/WHT-E.H.	RED/WHT-1	29	RED/WHT D.B.		2WD/4WD
RED/BLK-E.H.	RED/BLK-1	28			TILT ALARM
RED-E.H.	RED-1	27	RED #4 ISM+RED #46B	RED S.P.	AUXILIARY POWER
WHT/RED-E.H.		26		WHT/RED S.P.	COOLANT TEMPERATURE SENDER
WHT/BLK-E.H.		25		WHT/BLK S.P.	OIL PRESSURE SENDER
WHT #10 ISM	WHT-E.H.	24			WARNING SENDER
RED/WHT-E.H.	WHT-2	23	WHT #7 ISM+RED-8	WHT S.P.	KEY SWITCH POWER
BLK CR5 #30	BLK-2	22		BLK S.P.	POWER TO PLATFORM
WHT CR2 #87	WHT-E.H.	21	WHT D.B+WHT #46B	WHT S.P.	IGNITION POWER
RED-E.H.		20		RED S.P.	12V BATTERY SUPPLY
	GRN/WHT-3	19		GRN/WHT S.P.	JIB VALVES
GRN/BLK-4	GRN/BLK-3	18	GRN/BLK D.B.	GRN/BLK S.P.	PLATFORM ROTATE RIGHT
GRN-4	GRN-3	17	GRN D.B.	GRN S.P.	PLATFORM ROTATE LEFT
	ORG/RED-3	16	ORG/RED D.B.	ORG/RED S.P.	PLATFORM LEVEL F.C.
ORG/BLK-CR18B #87	ORG/BLK-3	15	ORG/BLK D.B.	ORG/BLK S.P.	PLATFORM LEVEL DOWN
ORG-CR18A #87	ORG-3	14	ORG D.B.	ORG S.P.	PLATFORM LEVEL UP
WHT-5	BLU/RED-3	13			DRIVE ENAABLE LIGHT
WHT-E.H.	BLU/WHT-3	12		BLK-5	DRIVE ENABLE
	BLU/BLK-3	11		BLU/BLK S.P.	SECONDARY BOOM DOWN
	BLU-3	10		BLU S.P.	SECONDARY BOOM UP
BLK/RED-4	BLK/RED-3	9		BLK/RED S.P.	EXTEND/RETRACT F.C.
BLK/WHT-4	BLK/WHT-3	8	BLK/WHT D.B.+BLK/WHT #42A	BLK/WHT S.P.	BOOM RETRACT
BLK-4	BLK-3	7	BLK D.B.+BLK CR8 #85	BLK S.P.	BOOM EXTEND
WHT/RED-4	WHT/RED-3	6		WHT/RED S.P.	TURNTABLE ROTATION F.C.
WHT/BLK-4	WHT/BLK-3	5	WHT/BLK D.B.	WHT/BLK S.P.	TURNTABLE ROTATE LEFT
WHT-4	WHT-3	4	WHT D.B.	WHT S.P.	TURNTABLE ROTATE RIGHT
RED/WHT-4	RED/WHT-3	3		RED/WHT S.P.	PRIMARY BOOM F.C.
RED/BLK-4 +BLK-8	RED/BLK-3	2	RED/BLK DB + RED/BLK CR8	RED/BLK S.P.	PRIMARY BOOM DOWN
RED-4	RED-3	1	RED D.B.	RED S.P.	PRIMARY BOOM UP

LABEL	DESCRIPTION
(CABLE#1)	TO PLATFORM CONTROL BOX, TERMINAL 27-46
(CABLE#2)	TO PLATFORM CONTROL BOX, TERMINAL 22-23
(CABLE#3)	TO PLATFORM CONTROL BOX, TERMINAL 1-19
(CABLE#4)	TO CONTROL SOLENOID
(CABLE E.H.)	ENGINE HARNESS CABLE
CB1	CIRCUIT BREAKER, CONTROLS, 15A
CB2	CIRCUIT BREAKER, ENGINE, 15A
CR1	FUEL/START RELAY
CR2	FUEL/POWER RELAY
CR3	HIGH IDLE (RPM) CUTOUT RELAY
CR4	RPM RELAY
CR5	HORN RELAY
CR8	BOOM FUNCTION CUTOUT
CR17	HYDRAULIC OIL COOLER RELAY (OPTION)
CR18A & B	PLATFORM LEVEL CUTOUT RELAY (CE OPTION)
CR19	AUXILIARY RESISTOR RELAY
CR20	VOLTAGE DROP RELAY
F.C.	FLOW CONTROL
G1	VOLT METER GAUGE
G2	OIL PRESSURE GAUGE
G3	COOLANT TEMPERATURE GAUGE
HM	HOUR METER
KS1	KEY SWITCH
L3	STARTING AID LED
LS1 (CABLE#7)	BOOM EXTEND LIMIT SWITCH
LS2 (CABLE#6)	BOOM UP LIMIT SWITCH
LS3 (CABLE#5)	DRIVE ENABLE LIMIT SWITCH
P1	EMERGENCY STOP BUTTON
PR1	AUXILARY POWER RELAY
PR2	STRTING AID POWER RELAY
R2	RESISTOR, 10 OHM, BOOM FUNCTIONS
R3	RESISTOR, 14 OHM, TURNTABLE ROTATE
TS10	AUXILIARY SWITCH
TS11	ENGINE START SWITCH
TS12	STARTING AID SWITCH
TS13	FUNCTION ENABLE SWITCH
TS14	PLATFORM ROTATE SWITCH
TS15	JIB BOOM SWITCH
TS16	PLATFORM LEVEL SWITCH
TS17	PRIMARY BOOM UP/DOWN SWITCH
TS18	TURNTABLE ROTATE SWITCH
TS19	BOOM EXTEND/RETRACT SWITCH

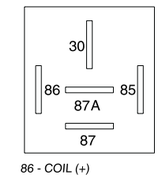

86 - COIL (+)
85 - COIL (-)
30 - COMMON (COM)
87 - NORMALLY OPEN (NO)
87A - NORMALLY CLOSED (NC)

https://truckmanualshub.com/

Platform Control Box Wiring Diagram- Perkins Models

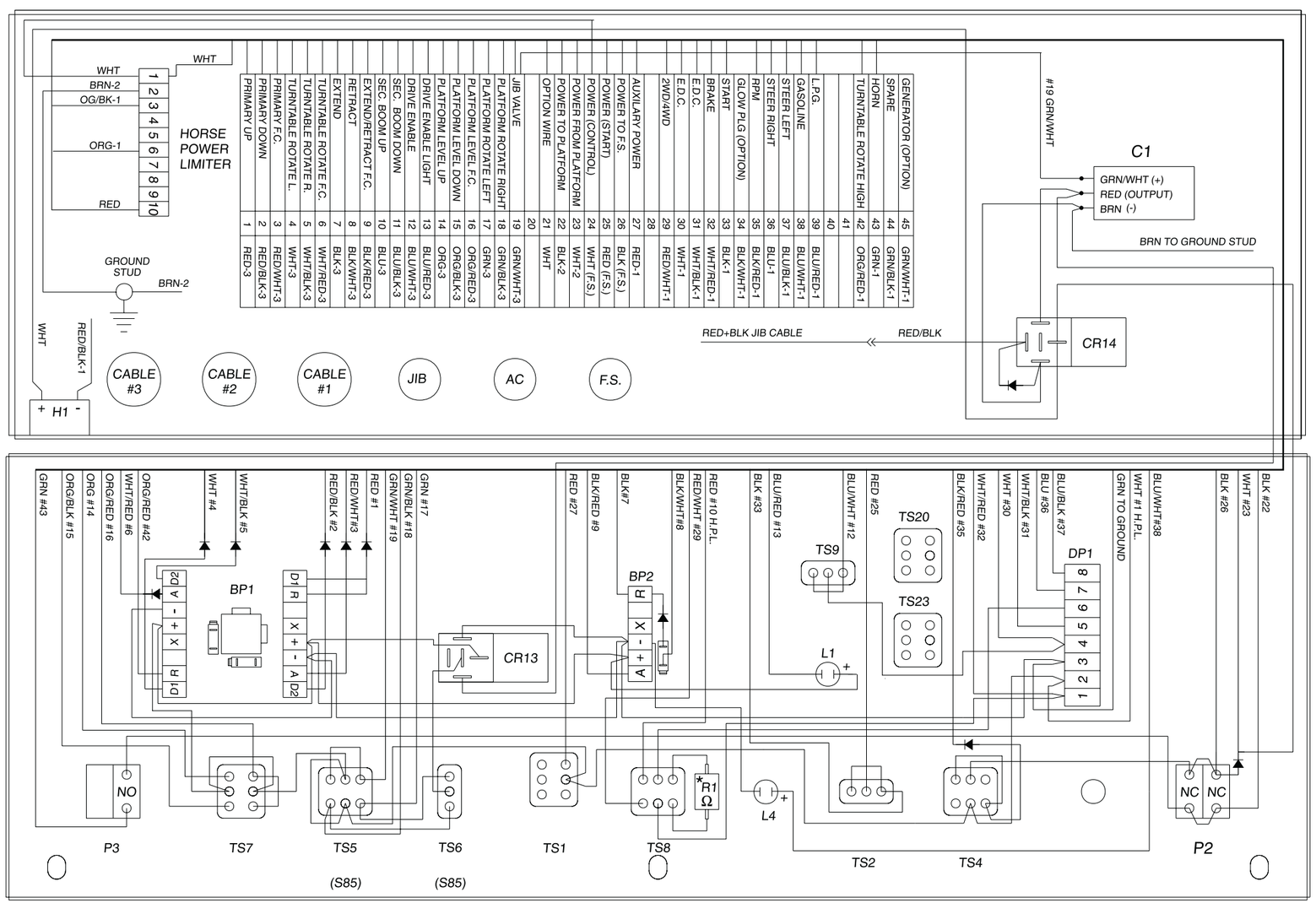

LABEL	DESCRIPTION
BP1	BOOM PROPORTIONAL CONTROLLER PRIMARY BOOM UP/DOWN & TURNTABLE ROTATE
BP2	BOOM PROPORTIONAL CONTROLLER EXTEND/RETRACT
CABLE#1	FROM GROUND CONTROL BOX, TERMINALS 27-45
CABLE#2	FROM GROUND CONTROL BOX, TERMINALS 22-23
CABLE#3	FROM GROUND CONTROL BOX, TERMINALS 1-19
C1	DELAY CAPACITOR
CR13	JIB LOCKOUT RELAY
CR14	PLATFORM ROTATOR RELAY
DP1	DRIVE PROPORTIONAL CONTROLLER STEER LEFT/ RIGHT
F.S.	CABLE FROM FOOT SWITCH
H.P.L.	HORSEPOWER LIMITER BOARD
H1	TILT ALARM
JIB	CABLE FOR JIB FUNCTION
L1	DRIVE ENABLE LED
L4	STARTING AID LED
P2	EMERGENCY STOP BUTTON
P3	HORN BUTTON
R1	RESISTOR
TS1	AUXILIARY SWITCH
TS2	START ENGINE SWITCH
TS3	STARTING AID SWITCH (OPTION)
TS4	HIGH RPM SWITCH
TS5	PLATFORM ROTATE LEFT/RIGHT SWITCH
TS6	JIB BOOM UP/DOWN SWITCH
TS7	PLATFORM LEVEL UP/DOWN SWITCH
TS8	DRIVE SPEED SELECT SWITCH
TS9	DRIVE ENABLE SWITCH
TS20	GENERATOR SWITCH (OPTION)
TS23	LIFT/DRIVE SELECT SWITCH (OPTION)
AC	AC POWER CABLE

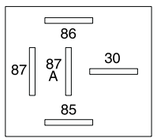

86 - COIL (+)
85 - COIL (-)
30 - COMMON (COM)
87 - NORMALLY OPEN (N.O.)
87A - NORMALLY CLOSED (N.C.)

*NOTE: RESISTOR IS MOUNTED TO EXTEND/RETRACT CONTROLLER.
100 OHM RESISTOR FOR 4WD AND 150 OHM RESISTOR FOR 2WD.

https://truckmanualshub.com/

Hydraulic Symbols Legend

Pressure gauge

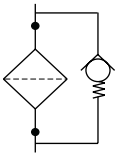

Filter with
bypass valve
relief setting

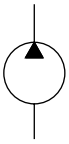

Pump
fixed displacement

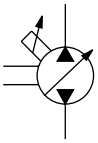

Pump
bi-directional,
variable displacement

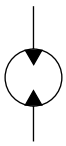

Motor
bi-directional

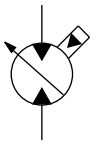

Motor
2-speed,
bi-directional

Pump prime mover
(engine or motor)

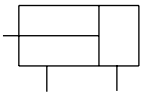

Double acting
cylinder

Accumulator

Orifice with size

Shut off valve

Check valve

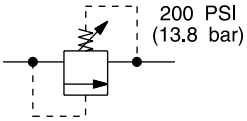

Relief valve
with pressure setting

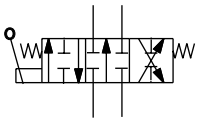

Directional valve
(mechanically activated)

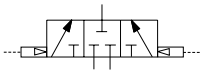

Pilot operated 3 position,
3 way, shuttle valve

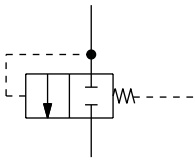

Differential
sensing valve
(function manifold)

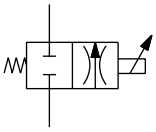

Solenoid operated
proportional valve

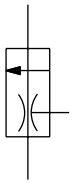

Priority
flow regulator valve

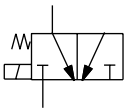

Solenoid operated 2 position,
2 way, directional valve

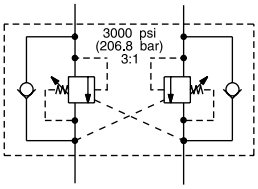

Counterbalance valve
with pressure and pilot ratio

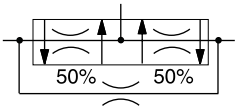

Flow divider/combiner valve
with pressure balancing orifice
and flow percentages

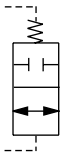

High speed
divider bypass valve

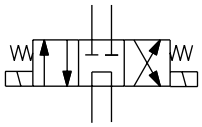

Solenoid operated 3 position,
4 way, directional valve

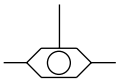

2 position, 3 way, shuttle valve

Oil cooler

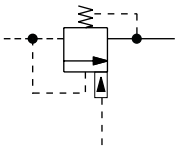

Unloader valve
pilot operated
(oscillate sequence)

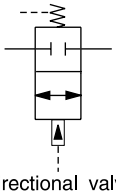

Directional valve
pilot operated
2 position, 2 way

Brake

https://truckmanualshub.com/

2WD Hydraulic Schematic

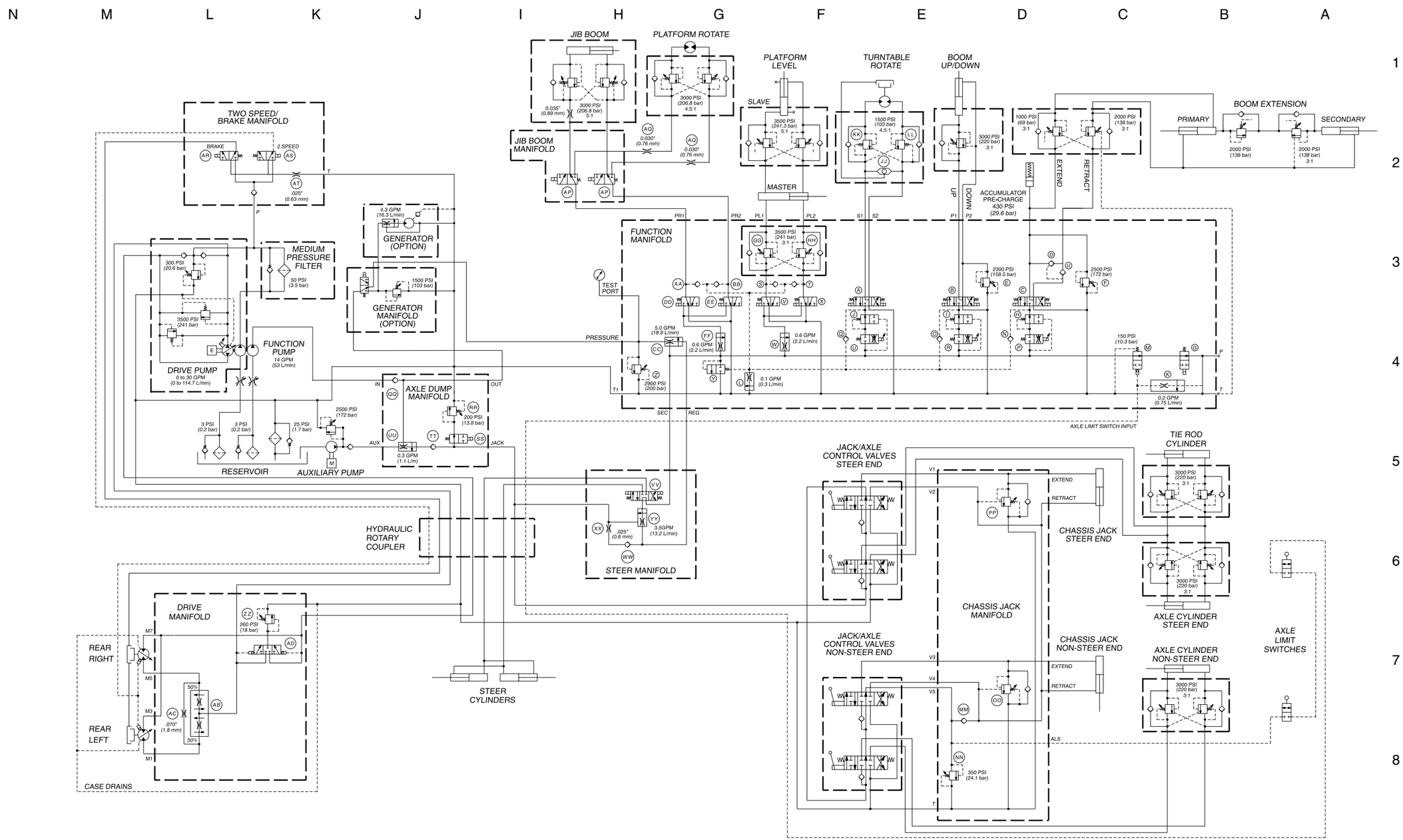

https://truckmanualshub.com/

4WD Hydraulic Schematic

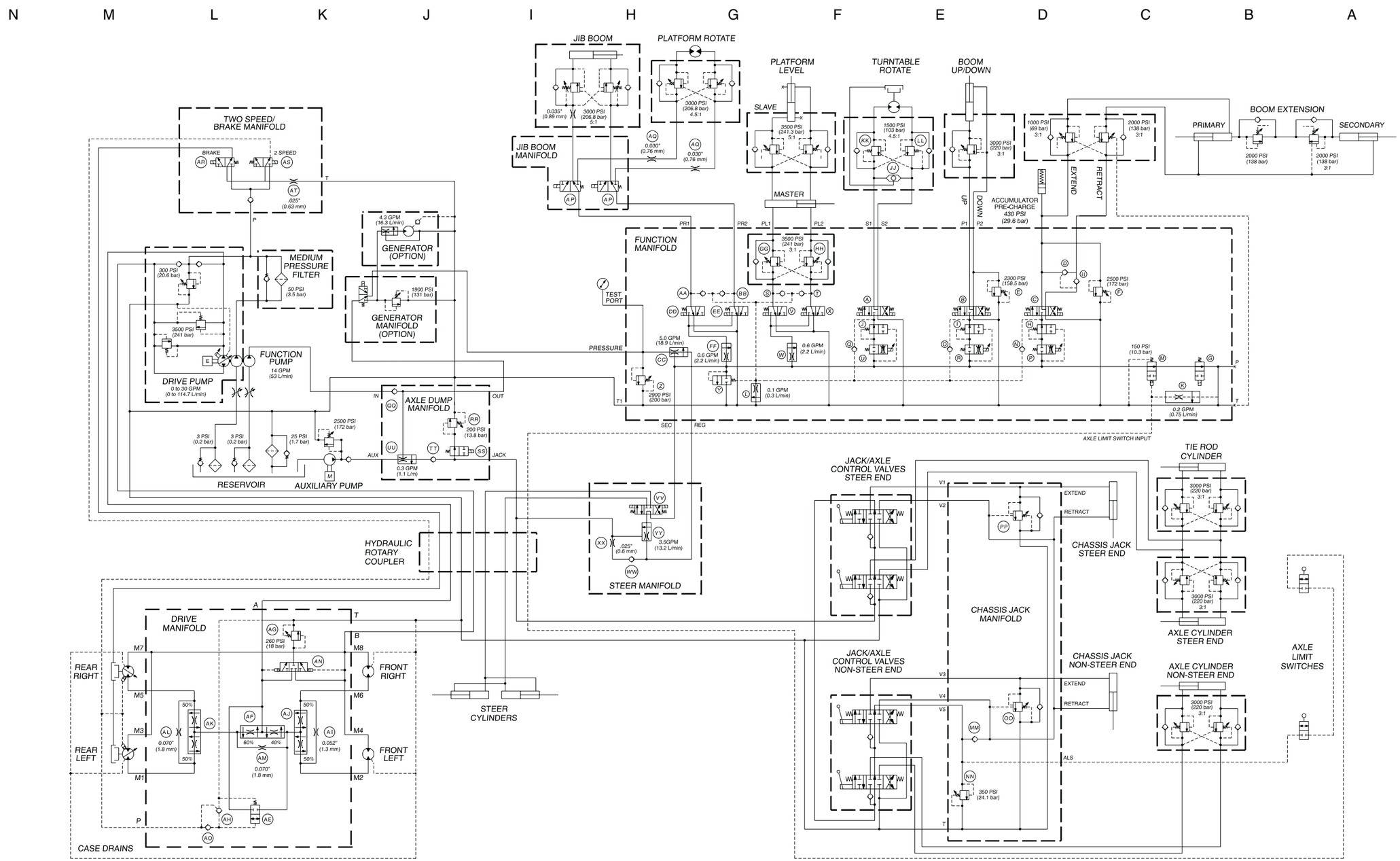

https://truckmanualshub.com/

Repair Procedures

Observe and Obey:

- ☑ Repair procedures shall be completed by a person trained and qualified on the repair of this machine.
- ☑ Immediately tag and remove from service a damaged or malfunctioning machine.
- ☑ Repair any machine damage or malfunction before operating the machine.

Before Repairs Start:

- ☑ Read, understand and obey the safety rules and operating instructions in the *Genie S-80 & Genie S-85 Operator's Manual*.
- ☑ Be sure that all necessary tools and parts are available and ready for use.
- ☑ Read each procedure completely and adhere to the instructions. Attempting shortcuts may produce hazardous conditions.
- ☑ Unless otherwise specified, perform each repair procedure with the machine in the following configuration:
  - · Machine parked on a flat, level surface
  - · Boom in the stowed position
  - · Turntable rotated with the boom between the non-steering wheels
  - · Turntable secured with the turntable rotation lock pin
  - · Key switch in the OFF position with the key removed
  - · Wheels chocked

About This Section

Most of the procedures in this section should only be performed by a trained service professional in a suitably equipped workshop. Select the appropriate repair procedure after troubleshooting the problem.

Perform disassembly procedures to the point where repairs can be completed. Then to re-assemble, perform the disassembly steps in reverse order.

Symbols Legend

⚠	Safety alert symbol—used to alert personnel to potential personal injury hazards. Obey all safety messages that follow this symbol to avoid possible injury or death.
⚠DANGER	Red—used to indicate the presence of an imminently hazardous situation which, if not avoided, **will** result in death or serious injury.
⚠WARNING	Orange—used to indicate the presence of a potentially hazardous situation which, if not avoided, **could** result in death or serious injury.
⚠CAUTION	Yellow with safety alert symbol—used to indicate the presence of a potentially hazardous situation which, if not avoided, **may** result in minor or moderate injury.
CAUTION	Yellow without safety alert symbol—used to indicate the presence of a potentially hazardous situation which, if not avoided, **may** result in property damage.
NOTICE	Green—used to indicate operation or maintenance information.

⊙ Indicates that a specific result is expected after performing a series of steps.

https://truckmanualshub.com/

Platform Controls

1-1 Joystick Controllers

Maintaining joystick controllers at the proper settings is essential to safe machine operation. Every joystick controller should operate smoothly and provide proportional speed control over its entire range of motion.

NOTICE Joystick controller voltage settings are approximate. Some machines may require slightly different voltage settings to obtain the correct function time range.

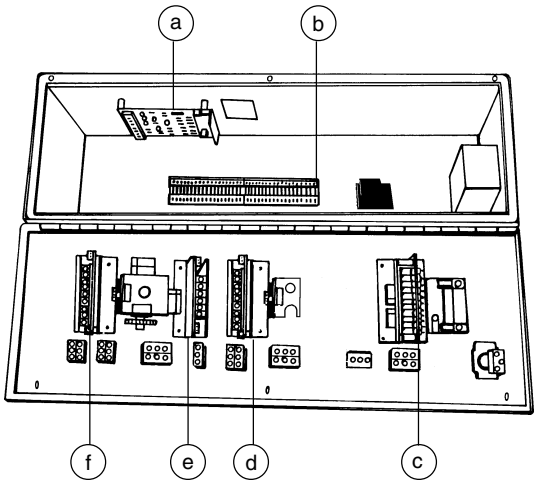

Platform control box
a horsepower limiter board
b terminals
c drive controller
d extend/retract controller
e boom controller
f turntable rotate controller

Boom Up/Down Controller Adjustments

WARNING Electrocution hazard. Contact with electrically charged circuits could result in death or serious injury. Remove all rings, watches and other jewelry.

NOTICE Do not adjust the controllers unless the static battery voltage is above 12V DC and the alternator is operating properly with 13.6 to 14.5V DC output.

NOTICE Individual trim potentiometers (trimpots) are used to adjust various output signals from the horsepower limiter board and boom function controllers. The trimpots will be identified as the following:

- Max out trim potentiometer (max out trimpot)
- High range trim potentiometer (max out trimpot)
- Lo range trim potentiometer (lo range trimpot)
- Dual range trim potentiometer (lo range trimpot)
- Threshold trim potentiometer (threshold trimpot)
- Ramp rate trim potentiometer (ramp rate trimpot)

1 Check the battery condition with a volt meter. The reading should be 12V DC or more to accurately adjust the controller.

2 Turn the key switch to platform controls and pull out the Emergency Stop button to the ON position at both the ground and platform controls. Do not start the engine.

https://truckmanualshub.com/

PLATFORM CONTROLS

3 Open the platform control box lid and locate the boom up/down controller.

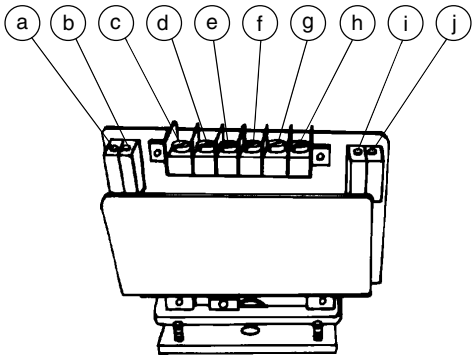

a ramp rate trimpot
b lo range trimpot
c terminal "R" activates max out range
d (not used)
e terminal "X" (not used)
f terminal "-" ground
g terminal "+" positive
h terminal "A" proportional output
i threshold trimpot
j max out trimpot

4 Set the preliminary ramp rate: Turn the ramp rate trimpot adjustment screw counterclockwise 15 turns or until you hear a repeated click.

5 Connect the red (+) lead from a volt meter to the “A” terminal on the controller printed circuit board. Connect the black (-) lead to ground.

6 Set the max out: Press down the foot switch, then move the controller all the way to the UP position. Adjust the voltage to 9.1V DC. Turn the max out trimpot adjustment screw clockwise to increase the voltage or counterclockwise to decrease the voltage.

7 Set the lo range: Press down the foot switch, then move the controller all the way to the DOWN position. Adjust the voltage to 8.3V DC. Turn the lo range trimpot adjustment screw clockwise to increase the voltage or counterclockwise to decrease the voltage.

8 Start the engine and move the engine idle control switch to foot switch activated high idle (rabbit and foot switch symbol). Lower the boom to the stowed position.

NOTICE Engine should be at normal operating temperature.

9 Set the threshold: Press down the foot switch, then slowly move the controller off center until the moment a voltage reading appears. Adjust the voltage until the moment the boom begins to move. Turn the threshold trimpot adjustment screw clockwise to increase the voltage or counterclockwise to decrease the voltage.

10 Start a timer and record how long it takes for the boom to fully raise. Adjust the max out trimpot to achieve a 90 to 120 second cycle time. Turn the max out trimpot adjustment screw clockwise to increase the speed or counterclockwise to decrease the speed.

11 Start a timer and record how long it takes for the boom to fully lower. Adjust the lo range trimpot to achieve an 90 to 120 second cycle time. Turn the lo range trimpot adjustment screw clockwise to increase the speed or counterclockwise to decrease the speed.

NOTICE If the function cycle time is not achievable, check the relief valve pressure. See 11-2, *Valve Adjustments - Function Manifold.*

https://truckmanualshub.com/

PLATFORM CONTROLS

12 Turn the engine OFF.

13 Pull out the Emergency Stop button to the ON position.

14 Press down the foot switch and then move the controller all the way to the UP position. Record the maximum voltage reading.

15 Start the engine.

16 Start a timer and simultaneously move the controller all the way to the UP position. Note how long it takes to reach the maximum voltage recorded in step 14. This is the ramp rate.

17 Set the ramp rate: Turn the ramp rate trimpot to obtain a 2 second ramp speed. Turn the trimpot clockwise to increase the time or counterclockwise to decrease the time.

Boom up/down specifications	
Threshold	3.5V DC
Boom up - Max out	9.1V DC
Cycle time	90 to 120 seconds
Boom down - Lo range	8.3V DC
Cycle time	90 to 120 seconds
Ramp rate	2 seconds

Turntable Rotation Controller Adjustments

WARNING Electrocution hazard. Contact with electrically charged circuits could result in death or serious injury. Remove all rings, watches and other jewelry.

NOTICE Do not adjust the controllers unless the static battery voltage is above 12V DC and the alternator is operating properly with 13.6 to 14.5V DC output.

1 Check the battery condition with a volt meter. The reading should be 12V DC or more to accurately adjust the controller.

2 Turn the key switch to platform controls and pull out the Emergency Stop button to the ON position at both the ground and platform controls. Do not start the engine.

https://truckmanualshub.com/

3 Open the platform control box lid and locate the turntable rotation controller. Refer to the platform control box illustration, page 7-2.

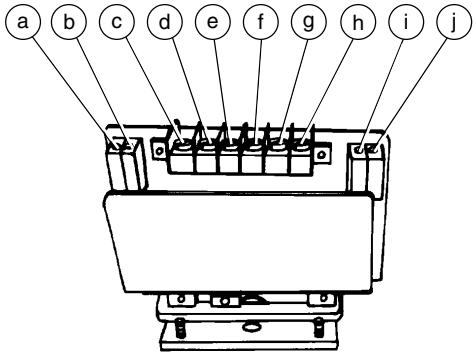

a ramp rate trimpot
b lo range trimpot
c terminal "R" activates max out range
d (not used)
e terminal "X" (not used)
f terminal "-" ground
g terminal "+" positive
h terminal "A" proportional output
i threshold trimpot
j max out trimpot

4 Set the preliminary ramp rate: Turn the ramp rate trimpot adjustment screw counterclockwise 15 turns or until you hear a repeated click.

5 Connect the red (+) lead from a volt meter to the “A” terminal on the controller printed circuit board. Connect the black (-) lead to ground.

6 Set the threshold: Press down the foot switch, then slowly move the controller off center until the moment a voltage reading appears. Adjust the voltage to 3.5V DC. Turn the threshold trimpot adjustment screw clockwise to increase the voltage or counterclockwise to decrease the voltage.

7 Set the max out: Press down the foot switch, fully retract the boom, then move the controller all the way to the left or right. Adjust the voltage to 5.5V DC. Turn the max out trimpot adjustment screw clockwise to increase the voltage or counterclockwise to decrease the voltage.

8 Set the lo range: Press down the foot switch, extend the boom approximately 3 feet (0.9 m), then move the controller all the way to the left or right. Adjust the voltage to 4.5V DC. Turn the lo range trimpot adjustment screw clockwise to increase the voltage or counterclockwise to decrease the voltage.

9 Start the engine and move the engine idle control switch to foot switch activated high idle (rabbit and foot switch symbol).

NOTICE Engine should be at normal operating temperature.

https://truckmanualshub.com/

PLATFORM CONTROLS

10 Fully retract the boom, then start a timer and record how long it takes the turntable to rotate through a complete circle. Adjust the max out trimpot to achieve a 80 to 120 second cycle time. Turn the max out trimpot adjustment screw clockwise to increase the speed or counterclockwise to decrease the speed.

11 With the boom extended approximately 3 feet (0.9 m), start a timer and record how long it takes the turntable to rotate through a complete circle. Adjust the lo range trimpot to achieve a 210 to 240 second cycle time. Turn the lo range trimpot adjustment screw clockwise to increase the speed or counterclockwise to decrease the speed.

NOTICE If the function cycle time is not achievable, check the relief valve pressure. See 11-2, *Valve Adjustments - Function Manifold.*

12 Turn the engine OFF.

13 Pull out the Emergency Stop button to the ON position.

14 Press down the foot switch and move the controller all the way to the left or right. Record the maximum voltage reading.

15 Start the engine.

16 Start a timer and simultaneously move the controller all the way to the left or right. Note how long it takes to reach the maximum voltage recorded in step 14. This is the ramp rate.

17 Set the ramp rate: Turn the ramp rate trimpot to obtain a 2 second ramp speed. Turn the ramp rate trimpot adjustment screw clockwise to increase the time or counterclockwise to decrease the time.

Turntable rotation specifications	
Threshold	3.5V DC
Boom retracted - Max out	5.5V DC
Cycle time	80 to 120 seconds
Boom extended - Lo range	4.5V DC
Cycle time	210 to 240 seconds
Ramp rate	2 seconds

https://truckmanualshub.com/

Boom Extend/Retract Controller Adjustments

⚠WARNING Electrocution hazard. Contact with electrically charged circuits could result in death or serious injury. Remove all rings, watches and other jewelry.

NOTICE Do not adjust the joystick controllers unless the static battery voltage is above 12V DC and the alternator is operating properly with 13.6 to 14.5V DC output.

1 Check the battery condition with a volt meter. The reading should be 12V DC or more to accurately adjust the controller.

2 Turn the key switch to platform controls and pull out the Emergency Stop button to the ON position at both the ground and platform controls. Do not start the engine.

3 Open the platform control box lid and locate the boom extend/retract controller.

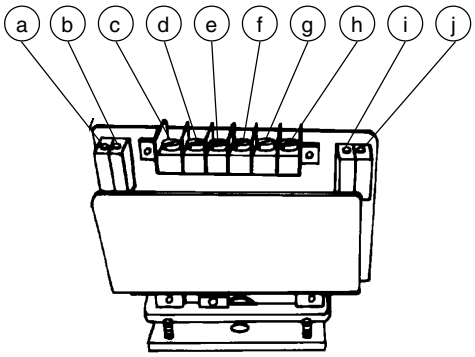

a ramp rate trimpot
b lo range trimpot
c terminal "R", activates max out range
d terminal unused
e terminal "X", auxiliary
f terminal "-", ground
g terminal "+", battery, positive
h terminal "A", proportional output
i threshold trimpot
j max out trimpot

4 Set the preliminary ramp rate: Turn the ramp rate trimpot adjustment screw counterclockwise 15 turns or until you hear a repeated click.

5 Connect the red (+) lead from a volt meter to the “A” terminal on the controller printed circuit board. Connect the black (-) lead to ground.

https://truckmanualshub.com/

PLATFORM CONTROLS

6 Set the threshold: Press down the foot switch, then slowly move the controller off center until the moment a voltage reading appears. Adjust the voltage to 3.5V DC. Turn the threshold trimpot adjustment screw clockwise to increase the voltage or counterclockwise to decrease the voltage.

7 Set the max out: Press down the foot switch, then move the controller all the way to the EXTEND position. Adjust the voltage to 9.75V DC. Turn the max out trimpot adjustment screw clockwise to increase the voltage or counterclockwise to decrease the voltage.

8 Set the lo range: Press down the foot switch, then move the controller all the way to the RETRACT position. Adjust the voltage to 5.5V DC. Turn the lo range trimpot adjustment screw clockwise to increase the voltage or counterclockwise to decrease the voltage.

9 Start the engine and move the engine idle control switch to foot switch activated high idle (rabbit and foot switch symbol). Lower the boom to the stowed position.

NOTICE Engine should be at normal operating temperature.

10 Start a timer and record how long it takes for the boom to fully extend. Adjust the max out trimpot to achieve a 140 to 170 second cycle time.

11 Start a timer and record how long it takes for the boom to fully retract. Adjust the lo range trimpot to achieve a 80 to 110 second cycle time.

NOTICE If the function cycle time is not achievable, check the relief valve pressure. See 11-2, *Valve Adjustments - Function Manifold.*

12 Turn the engine off and re-connect the volt meter.

13 Pull out the Emergency Stop button to the ON position.

14 Press down the foot switch and move the controller all the way to the EXTEND position. Record the maximum voltage reading.

Boom extend/retract specifications	
Threshold	3.5V DC
Boom extend - Max out	9.75V DC
Cycle time	140 to 170 seconds
Boom retract - Lo range	5.5V DC
Cycle time	80 to 110 seconds

https://truckmanualshub.com/

PLATFORM CONTROLS

1-2
Horsepower Limiter Board

The horsepower limiter board (HPL) is responsible for governing drive pump output. Receiving engine rpm signals from the alternator, the HPL senses a drop in rpm normally due to increased drive resistance due to operation on an incline or over rough terrain. Instantly, the HPL decreases voltage to the drive controller which in turn decreases voltage to the drive pump. Decreased voltage adjusts the output of the drive pump to maintain peak engine performance.
For optimum performance, three adjustments are required.

How to Adjust the Horsepower Limiter Board

NOTICE The engine rpm must be correct before performing this procedure. See Maintenance Procedure B-6, *Check and Adjust the Engine RPM.*

NOTICE Do not adjust the horsepower limiter board unless the static battery voltage is above 12V DC and the alternator is operating properly with 12.5 to 14.5V DC output.

NOTICE **Ford models:** Perform this procedure in gasoline mode.

1 Remove the fasteners from the platform control box lid.

2 Open the control box lid and locate the horsepower limiter board.

⚠WARNING Electrocution hazard. Contact with electrically charged circuits could result in death or serious injury. Remove all rings, watches and other jewelry.

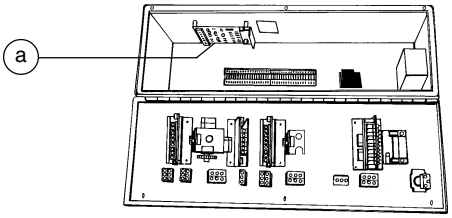

Platform control box
a horsepower limiter board

3 Connect the black (-) lead from a DC volt meter to the number 2 terminal, and the red (+) lead to the number 10 terminal.

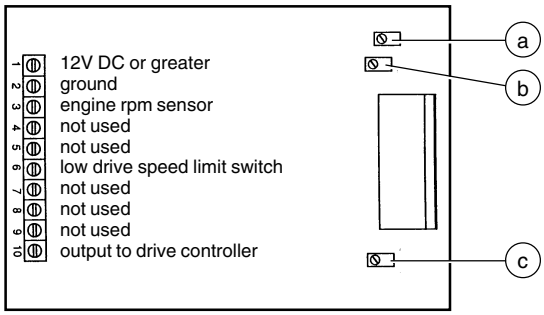

Horsepower limiter board

a "A" trimpot maximum voltage output to the drive controller in the stowed position
(turn counterclockwise to increase voltage)

b "B" trimpot maximum voltage output to the drive controller in the boom raised or extended position
(turn clockwise to increase voltage)

c "C" trimpot reaction rate or how fast the voltage output reacts to the change in engine rpm
(turn counterclockwise to increase voltage)

https://truckmanualshub.com/

PLATFORM CONTROLS

4 Start the engine from the platform controls.

5 Move the engine idle control toggle switch to foot switch activated high idle (rabbit and foot switch symbol).

6 Press down the foot switch and turn the "A" trimpot adjustment screw counterclockwise to increase voltage or clockwise to decrease voltage.

"A" potentiometer specifications - all models	
Voltage setting	12V DC

7 Move the engine idle control toggle switch to low idle (turtle symbol).

8 Press down the foot switch and turn the "C" trimpot adjustment screw to obtain a 0.10V DC voltage reading.

9 Move the engine idle control toggle switch to foot switch activated high idle (rabbit and foot switch symbol).

10 Press down the foot switch and re-adjust the "A" trimpot to the previous voltage setting in step 6.

11 Be sure that the boom is in the stowed position, then drive the machine and observe how the engine rpm reacts to drive controller movement. If the engine surges or hunts, adjust the "C" potentiometer counterclockwise until surging is minimized.

NOTICE Under an extreme load, an excessive counterclockwise adjustment to the "C" trimpot will cause the engine to stall. The "C" trimpot adjustment is a compromise between engine stability (surging) and engine rpm drop.

12 Disconnect the volt meter.

13 Raise the boom above horizontal.

14 Drive the machine for 40 feet (12 m) and record the elapsed time. Repeat this step in the opposite drive direction.

15 Adjust the "B" trimpot to obtain the correct raised drive speed of 1 foot per second (0.31 m per second). Turn the "B" trimpot adjustment screw clockwise to increase speed or clockwise to decrease speed.

16 Close the platform control box lid and install the fasteners.

Drive speed: stowed position, high range	**2WD**	**4WD**
Ford models	40 ft/7.2 sec 12.2 m/7.2 sec	40 ft/8.8 sec 12.2 m/8.8 sec
Deutz or Perkins models	40 ft/8.3 sec 12.2 m/8.3 sec	40 ft/9.7 sec 12.2 m/9.7 sec
Boom raised or extended all models		40 ft/40 sec 12.2m/40 sec

https://truckmanualshub.com/

1-3 Foot Switch

How to Test the Foot Switch

NOTICE Perform this procedure with the key switch in the OFF position.

1 Remove the foot switch cover plate fasteners from the platform.

2 Remove the foot switch guard mounting fasteners from the platform.

3 Remove the foot switch mounting fasteners that attach the foot switch to the foot switch guard.

4 Remove the cover plate from the bottom of the foot switch to access the foot switch wire terminals.

5 Do not press down the foot switch. Connect the leads from an ohmmeter or continuity tester to each wire combination listed below and check for continuity.

Test	Desired result
red to black	continuity (zero Ω)
red to white	no continuity (infinite Ω)
black to white	no continuity (infinite Ω)

6 Press down the foot switch. Connect the leads from an ohmmeter or continuity tester to each wire combination listed below and check for continuity.

Test	Desired result
red to black	no continuity (infinite Ω)
red to white	no continuity (infinite Ω)
black to white	continuity (zero Ω)

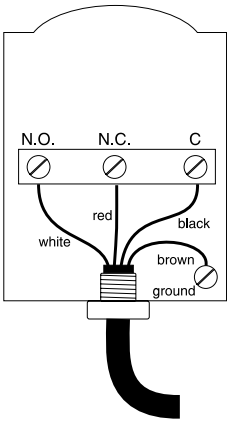

https://truckmanualshub.com/

PLATFORM CONTROLS

1-4 Toggle Switches

Toggle switches used for single function switching are single pole double throw (SPDT) switches. Dual function switching requires a double pole double throw (DPDT) switch.

How to Test a Toggle Switch

NOTICE Continuity is the equivalent of 0 to 3 ohms. A simple continuity tester may not accurately test the switch.

This procedure covers fundamental switch testing and does not specifically apply to all varieties of toggle switches.

1 Turn the key switch to the OFF position. Tag and disconnect all wiring from the toggle switch to be tested.

2 Connect the leads of an ohmmeter to the switch terminals in the following combinations listed to check for continuity.

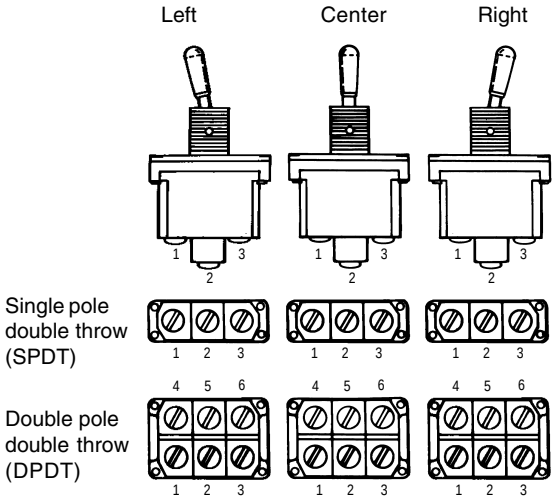

Test	Desired result
Left position	
terminal 1 to 2, 3, 4, 5 & 6	no continuity (infinite Ω)
terminal 2 to 3	continuity (zero Ω)
terminal 2 to 4, 5 & 6	no continuity (infinite Ω)
terminal 3 to 4, 5 & 6	no continuity (infinite Ω)
terminal 4 to 5 & 6	no continuity (infinite Ω)
terminal 5 to 6	continuity (zero Ω)
Center position	There are no terminal combinations that will produce continuity (infinite Ω)
Right position	
terminal 1 to 2	continuity (zero Ω)
terminal 1 to 3, 4, 5 & 6	no continuity (infinite Ω)
terminal 2 to 3, 4, 5 & 6	no continuity (infinite Ω)
terminal 3 to 4, 5 & 6	no continuity (infinite Ω)
terminal 4 to 5	continuity (zero Ω)
terminal 4 to 6	no continuity (infinite Ω)
terminal 5 to 6	no continuity (infinite Ω)

https://truckmanualshub.com/

Platform Components

2-1 Platform

How to Remove the Platform

1 Open the platform control box.

2 Tag and disconnect the foot switch wiring from the terminal strip inside the platform control box. Remove the cable from the bottom of the platform control box.

3 Remove the platform control box mounting fasteners. Lower the control box and set it aside.

NOTICE If your machine is equipped with an airline to platform option, the airline must be disconnected from the platform before removal.

4 Support the platform with an appropriate lifting device.

5 Remove the platform mounting fasteners and remove the platform from the machine.

⚠WARNING Crushing hazard. The platform could become unstable and fall when it is removed from the machine if it is not properly supported.

2-2 Platform Leveling Slave Cylinder

The slave cylinder and the rotator pivot are the two primary supports for the platform. The slave cylinder keeps the platform level through the entire range of boom motion. It operates in a closed-circuit hydraulic loop with the master cylinder. The slave cylinder is equipped with counterbalance valves to prevent movement in the event of a hydraulic line failure.

How to Remove the Slave Cylinder

NOTICE Before cylinder removal is considered to correct a malfunction, bleed the slave cylinder to be sure there is no air in the closed loop hydraulic circuit.

NOTICE When removing a hose assembly or fitting, the O-ring on the fitting and/or hose end must be replaced and then torqued to specification during installation.
Refer to Section Two, *Hydraulic Hose and Fitting Torque Specifications.*

1 Extend the boom until the slave cylinder barrel-end pivot pin is accessible.

2 Raise the boom approximately 3 feet (0.9 m) and place a structure capable of supporting it under the platform.

3 Lower the boom until the platform is resting on the structure just enough to support the platform.

NOTICE Do not rest the entire weight of the boom on the structure.

https://truckmanualshub.com/

4 Tag, disconnect and plug the hydraulic hoses from the slave cylinder at the union located near the platform rotate counterbalance valve manifold and connect them together using a connector. Cap the fittings on the cylinder.

⚠WARNING Bodily injury hazard. Spraying hydraulic oil can penetrate and burn skin. Loosen hydraulic connections very slowly to allow the oil pressure to dissipate gradually. Do not allow oil to squirt or spray.

5 Remove the pin retaining fastener from the slave cylinder rod-end pivot pin. Do not remove the pin.

6 Remove the external retaining ring from the barrel-end pivot pin.

7 Use a soft metal drift to drive the rod-end pivot pin out.

8 Use a soft metal drift and drive the barrel-end pin out.

9 Carefully pull the cylinder out of the boom.

CAUTION Component damage hazard. Hoses can be damaged if they are kinked or pinched.

How to Bleed the Slave Cylinder

NOTICE Do not start the engine. Use auxiliary power for all machine functions in this procedure.

1 Raise the boom to a horizontal position.

2 Move the platform level toggle switch up and down through two platform leveling cycles to remove any air that might be in the system.

https://truckmanualshub.com/

2-3 Platform Rotator

The platform rotator is a hydraulically activated helical gear assembly used to rotate the platform 160 degrees.

How to Remove the Platform Rotator

CAUTION Component damage hazard. Mark the platform mounting weldment and the rotator flange before removing the platform mounting weldment. The platform mounting weldment must be replaced in the exact same position on the rotator flange as it was before removal. If a new rotator is installed or the rotator is disassembled, proper alignment can be achieved by rotating the rotator all the way to the left and then installing the platform mounting weldment all the way in the left position.

NOTICE When removing a hose assembly or fitting, the O-ring on the fitting and/or hose end must be replaced and then torqued to specification during installation.
Refer to Section Two, *Hydraulic Hose and Fitting Torque Specifications.*

1 Remove the platform. See 2-1, *How to Remove the Platform*.

2 **S-80 models:** Tag, disconnect and plug the hydraulic hoses from the platform rotator manifold. Cap the fittings on the rotator.

⚠WARNING Bodily injury hazard. Spraying hydraulic oil can penetrate and burn skin. Loosen hydraulic connections very slowly to allow the oil pressure to dissipate gradually. Do not allow oil to squirt or spray.

S-85 models: Tag, disconnect and plug the hydraulic hoses from the "V1" and "V2" ports on platform rotator manifold. Cap the fittings on the manifold.

⚠WARNING Bodily injury hazard. Spraying hydraulic oil can penetrate and burn skin. Loosen hydraulic connections very slowly to allow the oil pressure to dissipate gradually. Do not allow oil to squirt or spray.

3 **S-85 models:** Support the platform leveling arms and the platform mounting weldment with an appropriate lifting device. Do not apply any lifting pressure.

All models:

4 Remove the mounting bolts from the platform mounting weldment, then remove the center bolt and slide the platform mounting weldment off of the platform rotator.

⚠WARNING Crushing hazard. The platform mounting weldment may become unbalanced and fall if it is not properly supported.

https://truckmanualshub.com/

5 Support the platform rotator with an appropriate lifting device. Do not apply any lifting pressure.

S-80 Models:

6 Support the rod end of the platform leveling slave cylinder. Protect the cylinder rod from damage.

7 Remove the pivot pin retaining fasteners from both the slave cylinder rod-end pivot pin and the rotator pivot pin.

8 Use a soft metal drift to remove both pivot pins. Remove the platform rotator from the machine.

⚠WARNING Crushing hazard. The platform rotator may become unbalanced and fall if it is not properly supported.

S-85 Models:

6 Remove the pin retaining fasteners from the jib boom and jib boom leveling arms to platform rotator pivot pins. Do not remove the pins.

7 Support the jib boom and leveling arms.

8 Use a soft metal drift to drive both pins out, then remove the platform rotator from the machine.

⚠WARNING Crushing hazard. The platform rotator may become unbalanced and fall if it is not properly supported.

NOTICE When installing the center bolt, torque the fastener to 200 ft-lbs.

How to Bleed the Platform Rotator

NOTICE Do not start the engine. Use auxiliary power for all machine functions in this procedure.

1 Connect a clear hose to the top bleed valve. Place the other end of the hose in a container to collect any drainage. Secure the container to the boom.

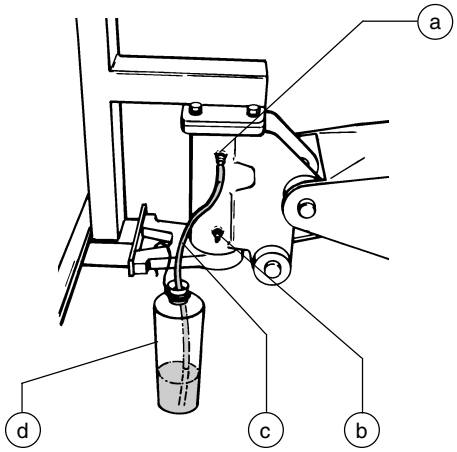

a top bleed valve
b bottom bleed valve
c clear hose
d container

2 Move the platform rotate toggle switch to the left and then to the right through two platform rotation cycles, continue holding the switch to the RIGHT until the platform is fully rotated to the right.

https://truckmanualshub.com/

3 Open the top bleed valve, but do not remove it.

4 Move the platform rotate toggle switch to the LEFT until the platform is fully rotated to the left. Continue holding the switch until air stops coming out of the bleed valve. Close the bleed valve.

⚠WARNING Crushing hazard. Keep clear of the platform during rotation.

5 Connect the clear hose to the bottom bleed valve. Open the bottom bleed valve, but do not remove it.

6 Hold the platform rotate toggle switch to the RIGHT until the platform is fully rotated to the right. Continue holding the switch until air stops coming out of the bleed valve. Close the bleed valve.

⚠WARNING Crushing hazard. Keep clear of the platform during rotation.

7 Remove the hose from the bleed valve and clean up any hydraulic oil that may have spilled.

8 Rotate the platform full right, then full left and inspect the bleed valves for leaks.

https://truckmanualshub.com/

Jib Boom Components, S-85 Models

3-1
Jib Boom

How to Remove the Jib Boom

NOTICE Perform this procedure with the boom in the stowed position.

NOTICE When removing a hose assembly or fitting, the O-ring on the fitting and/or hose end must be replaced and then torqued to specification during installation.
Refer to Section Two, *Hydraulic Hose and Fitting Torque Specifications.*

1 Remove the platform. See 2-1, *How to Remove the Platform*.

2 Remove the platform mounting weldment and the platform rotator. See 2-3, *How to Remove the Platform Rotator*.

3 Remove the cable cover from the side of the jib boom.

4 Support the jib boom with a lifting device.

5 Tag, disconnect and plug the jib boom lift cylinder hydraulic hoses. Cap the fittings on the cylinder.

⚠WARNING Bodily injury hazard. Spraying hydraulic oil can penetrate and burn skin. Loosen hydraulic connections very slowly to allow the oil pressure to dissipate gradually. Do not allow oil to squirt or spray.

6 Support the barrel end of the cylinder with a lifting device.

7 Remove the pin retaining fastener from the jib boom lift cylinder barrel-end pivot pin.

8 Use a soft metal drift to remove the pin and lay the cylinder onto the ground.

9 Tag, disconnect and plug all the hydraulic hoses from the jib boom manifold.

⚠WARNING Bodily injury hazard. Spraying hydraulic oil can penetrate and burn skin. Loosen hydraulic connections very slowly to allow the oil pressure to dissipate gradually. Do not allow oil to squirt or spray.

10 Attach a lifting strap from an overhead crane to the jib boom.

11 Remove the pin retaining fastener from the jib boom pivot pin. Use a soft metal drift to remove the pin, then remove the jib boom from the primary boom.

⚠WARNING Crushing hazard. If the overhead crane is not properly attached, the jib boom may become unbalanced and fall when it is removed from the machine.

12 Remove the pin retaining fastener from the jib boom lift cylinder rod-end pivot pin. Do not remove the pin.

13 Slide both of the jib boom leveling arms off of the jib boom pivot pin.

https://truckmanualshub.com/

14 Support the rod end of the jib boom lift cylinder with a lifting device.

15 Use a soft metal drift to remove the jib boom lift cylinder rod-end pivot pin, then remove the jib boom lift cylinder from the jib boom mounting weldment.

⚠WARNING Crushing hazard. If the overhead crane is not properly attached, the jib boom lift cylinder may become unbalanced and fall when it is removed from the machine.

3-2
Jib Boom Lift Cylinder

How to Remove the Jib Boom Lift Cylinder

NOTICE Perform this procedure with the boom in the stowed position.

NOTICE When removing a hose assembly or fitting, the O-ring on the fitting and/or hose end must be replaced and then torqued to specification during installation.
Refer to Section Two, *Hydraulic Hose and Fitting Torque Specifications.*

1 Raise the jib boom slightly and place blocks under the platform mounting weldment. Then lower the jib boom until the platform is resting on the blocks just enough to support the platform.

NOTICE Do not rest the entire weight of the boom on the blocks.

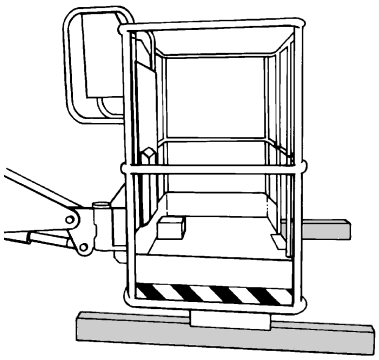

https://truckmanualshub.com/

JIB BOOM COMPONENTS, S-85 MODELS

2 Tag, disconnect and plug the jib boom lift cylinder hydraulic hoses. Cap the fittings on the cylinder.

⚠WARNING Bodily injury hazard. Spraying hydraulic oil can penetrate and burn skin. Loosen hydraulic connections very slowly to allow the oil pressure to dissipate gradually. Do not allow oil to squirt or spray.

3 Remove the pin retaining fasteners from the jib boom lift cylinder rod-end pivot pin. Do not remove the pin.

4 Use a soft metal drift to tap the jib boom lift cylinder rod-end pivot pin half way out. Then lower one of the leveling arms to the ground. Tap the pin the other direction and lower the opposite leveling arm. Do not remove the pin.

5 Attach a strap from an overhead crane to the jib boom lift cylinder.

6 Remove the pin retaining fastener from the jib boom lift cylinder barrel-end pivot pin. Use a soft metal drift to remove the pin.

7 Use a soft metal drift to remove the jib boom lift cylinder rod-end pin. Remove the cylinder from the machine.

⚠WARNING Crushing hazard. The jib boom lift cylinder may become unbalanced and fall when it is removed from the machine if it is not properly supported.

https://truckmanualshub.com/

Boom Components

4-1 Cable Track

The boom cable track guides cables and hoses running up the boom. It can be repaired link by link without removing the cables and hoses that run through it. Removing the entire boom cable track is necessary when performing major repairs that involve removing the boom.

How to Remove the Cable Track

NOTICE When removing a hose assembly or fitting, the O-ring on the fitting and/or hose end must be replaced and then torqued to specification during installation.
Refer to Section Two, *Hydraulic Hose and Fitting Torque Specifications.*

1 Open the platform control box and remove the platform control box mounting fasteners.

2 Disconnect the foot switch wiring from the terminal strip inside the platform control box. Remove the cable from the control box and set the control box aside.

3 **S-85 Models:** Tag, disconnect and plug the hydraulic hoses from the "V1" and "V2" port fittings on the counterbalance valve manifold located on the platform rotator. Cap the fittings on the manifold.

⚠WARNING Bodily injury hazard. Spraying hydraulic oil can penetrate and burn skin. Loosen hydraulic connections very slowly to allow the oil pressure to dissipate gradually. Do not allow oil to squirt or spray.

4 **All Models:** Tag, disconnect and plug the hydraulic hoses from the platform leveling slave cylinder at the union and connect the hoses from the cylinder together using a connector.

⚠WARNING Bodily injury hazard. Spraying hydraulic oil can penetrate and burn skin. Loosen hydraulic connections very slowly to allow the oil pressure to dissipate gradually. Do not allow oil to squirt or spray.

S-85 Models:

5 Remove the hose and cable cover from the side of the jib boom.

6 Remove the jib boom/platform rotate manifold mounting fasteners. Do not disconnect the hoses.

7 Tag, disconnect and plug the hydraulic hoses from the jib boom lift cylinder. Cap the fittings on the cylinder.

⚠WARNING Bodily injury hazard. Spraying hydraulic oil can penetrate and burn skin. Loosen hydraulic connections very slowly to allow the oil pressure to dissipate gradually. Do not allow oil to squirt or spray.

All models:

8 From the ground controls, raise the boom to a horizontal position.

https://truckmanualshub.com/

BOOM COMPONENTS

9 Remove the fasteners from the drive speed limit switch (LS1) mounted on the side of the cable track at the pivot end of the boom. Do not disconnect the wiring.

10 Remove the fasteners from the side panel on the lower cable track, then remove the panel. Pull all of the cables and hoses out of the channel.

11 Place blocks between the upper and lower cable tracks and secure the upper and lower tracks together.

WARNING Crushing hazard. If the upper and lower cable tracks are not properly secured together, the cable track could become unbalanced and fall when it is removed from the machine.

12 Remove the mounting fasteners from the large cable track guide at the platform end of the cable track. Remove the guide.

13 Remove the hose and cable clamp at the platform end of the cable track.

14 Attach a lifting strap from an overhead crane to the cable track.

15 Remove the cotter pin and clevis pin from the upper cable track at the platform end.

NOTICE Always replace the cotter pin with a new one when removing a clevis pin.

16 Remove the mounting fasteners that attach the lower cable track to the boom.

17 Remove the cable track from the machine and place it on a structure capable of supporting it.

WARNING Crushing hazard. The cable track could become unbalanced and fall if it is not properly attached to the overhead crane.

CAUTION Component damage hazard. Cables and hoses can be damaged if they are kinked or pinched.

https://truckmanualshub.com/

How to Repair the Cable Track

CAUTION Component damage hazard. The boom cable track can be damaged if it is twisted.

NOTICE A cable track repair kit is available through the Genie Industries Service Parts Department, part no. 46677. The kit includes a 4 link section of cable track, fasteners, other miscellaneous parts and detailed instructions.

1 Remove the boom cable track. See 4-1, *How to Remove the Boom Cable Track.*

2 Visually inspect the cable track and determine which 4 link section needs to be replaced.

3 Drill out the 4 spot welds on each side of the cable track using a 17/64" drill bit. Repeat this step for the other end of the 4 link section of cable track.

CAUTION Component damage hazard. Cables and hoses can be damaged if the drill bit comes in contact with them. Protect the hoses and cables with a block of wood to prevent drilling into the hoses and cables.

4 Remove the retaining fasteners from the upper black rollers from the 4 link section of cable track to be replaced. Remove the rollers.

5 Lift up the hoses and cables and carefully remove the damaged 4 link section of cable track.

CAUTION Component damage hazard. Hoses and cables can be damaged if they are kinked or pinched.

6 Remove the upper rollers from the replacement section of cable track.

7 Lift up the hoses and cables and carefully insert the new 4 link section of cable track.

CAUTION Component damage hazard. Hoses and cables can be damaged if they are kinked or pinched.

8 Connect the ends of the replacement cable track section to the existing cable track using the fasteners provided in the kit. Do not overtighten the fasteners.

CAUTION Component damage hazard. Over tightening the fasteners will prevent the cable track from rotating and it may kink or bind during operation.

NOTICE Be sure that the fasteners are installed from the inside out so that the nuts are on the outside of the cable track.

9 Install the rollers onto the new section of cable track.

10 Install cable track onto the machine and operate the boom extend/retract function through a full cycle to ensure smooth operation of the new section of cable track.

https://truckmanualshub.com/

BOOM COMPONENTS

4-2 Boom

How to Shim the Boom

1 Measure each side wear pad.

NOTICE Replace the pad if it is less than 11/16 inch (14.3 mm) thick. If the pad is more than 11/16 inch (14.3 mm) thick, perform the following procedure.

2 Measure each bottom and top wear pad.

NOTICE Replace the pad if it is less than 9/16 inch (17.5 mm) thick. If the pad is more than 9/16 inch (17.5 mm) thick, perform the following procedure.

3 Extend the boom until the wear pads are accessible.

4 Loosen the wear pad mounting fasteners.

5 Install the new shims under the wear pad to obtain zero clearance and zero drag.

6 Tighten the mounting fasteners.

7 Extend and retract the boom through an entire cycle. Check for tight spots that could cause binding or scraping.

NOTICE Always maintain squareness between the outer and inner boom tubes.

How to Remove the Boom

WARNING Bodily injury hazard. This procedure requires specific repair skills, lifting equipment and a suitable workshop. Attempting this procedure without these skills and tools could result in death or serious injury and significant component damage. Dealer service is strongly recommended.

NOTICE Perform this procedure with the boom in the stowed position.

NOTICE When removing a hose assembly or fitting, the O-ring on the fitting and/or hose end must be replaced and then torqued to specification during installation.
Refer to Section Two, *Hydraulic Hose and Fitting Torque Specifications.*

1 Remove the platform. See 2-1, *How to Remove the Platform*.

2 Remove the platform rotator and leveling slave cylinder. See 2-3, *How to Remove the Platform Rotator*.

3 Remove the cable track. See 4-1, *How to Remove the Cable Track.*

S-85 Models:

4 Remove the jib boom. See 3-1, *How to Remove the Jib Boom*.

5 Raise the boom to a horizontal position high enough that the boom lift cylinder rod-end can clear the boom lift cylinder mounting boss.

6 Remove the turntable end cover.

https://truckmanualshub.com/

7 Tag, disconnect and plug the hydraulic hoses from the master cylinder. Cap the fittings on the cylinder.

⚠WARNING Bodily injury hazard. Spraying hydraulic oil can penetrate and burn skin. Loosen hydraulic connections very slowly to allow the oil pressure to dissipate gradually. Do not allow oil to squirt or spray.

8 Remove the pin retaining fastener from the master cylinder barrel-end pivot pin. Place a rod through the pin and twist to remove the pin.

9 Remove the fasteners from the drive speed limit switch (LS2) mounted to the turntable riser at the pivot end of the boom. Do not disconnect the wiring.

10 Tag, disconnect and plug the extension cylinder hydraulic hoses. Cap the fittings on the cylinder.

⚠WARNING Bodily injury hazard. Spraying hydraulic oil can penetrate and burn skin. Loosen hydraulic connections very slowly to allow the oil pressure to dissipate gradually. Do not allow oil to squirt or spray.

11 Attach an overhead 5 ton (4536 kg) crane to the center point of the boom.

12 Attach a similar lifting device to the boom lift cylinder.

13 Remove the center turntable cover fasteners. Remove the cover.

14 Place support blocks under the boom lift cylinder, across the turntable.

15 Remove the pin retaining fastener from the boom lift cylinder rod-end pin. Use a soft metal drift to remove the pin.

⚠WARNING Crushing hazard. The boom lift cylinder will fall unless it is properly supported.

16 Lower the rod end of the lift cylinder onto support blocks. Protect the cylinder rod from damage.

17 Remove the pin retaining fastener from the boom pivot pin.

18 Use a soft metal drift to remove the boom pivot pin, then carefully remove the boom from the machine.

⚠WARNING Crushing hazard. If the overhead crane is not properly attached, the boom may become unbalanced and fall when it is removed from the machine.

How to Disassemble the Boom

NOTICE Complete disassembly of the boom is only necessary if the outer or inner boom tubes must be replaced. The extension cylinder can be removed without completely disassembling the boom. See 4-4, *How to Remove the Extension Cylinders*.

1 Remove the boom. See 4-2, *How to Remove the Boom*.

2 Remove the external snap rings from the extension cylinder barrel-end pivot pin at the pivot end of the number 1 boom tube. Use a soft metal drift to remove the pin.

https://truckmanualshub.com/

BOOM COMPONENTS

3 Remove and label the wear pads from the top, side, and bottom of the 1 boom tube at the platform end of the boom.

NOTICE Pay careful attention to the location and amount of shims used with each wear pad.

4 Remove the two wear pad stop bolts from each side of the number 1 boom tube (located on the outside).

5 Attach a lifting strap from an overhead crane to the number 2 and number 3 boom tubes at the platform end of the boom for support.

6 Support and slide the number 2 and 3 boom tubes out of the number 1 boom tube. Place the number 2 and 3 boom tubes on blocks for support.

⚠WARNING Crushing hazard. The number 2 and 3 boom tubes could become unbalanced and fall when they are removed from the number 1 boom tube if they are not properly supported.

NOTICE During removal, the overhead crane strap will need to be carefully adjusted for proper balancing.

7 Remove and label the wear pads from the top, side, and bottom of the number 2 boom tube at the platform end of the boom.

8 Remove the trunnion pin retaining fasteners at the base end of the number 2 boom tube. Use a slide hammer to remove the trunnion pins.

9 Carefully rotate the base end of the extension cylinder until the pin mounting bore is in a vertical position.

10 Attach a lifting strap from an overhead crane to the number 3 boom tube at the platform end of the boom for support.

11 Support and slide the number 3 boom tube out of the number 2 boom tube. Place the number 3 boom tube on blocks for support.

⚠WARNING Crushing hazard. The number 3 boom tube may become unbalanced and fall when it is removed from the number 2 boom tube if it is not properly supported.

NOTICE During removal, the overhead crane strap will need to be carefully adjusted for proper balancing.

12 Remove the external snap rings from the extension cylinder rod-end pivot pin at the platform end of the number 3 boom tube. Use a soft metal drift to remove the pin.

13 Support and slide the extension cylinder out of the base end of the number 3 boom tube. Place the extension cylinder on blocks for support.

⚠WARNING Crushing hazard. The extension cylinder may become unbalanced and fall when it is removed from the number 3 boom tube if it is not properly supported.

NOTICE During removal, the overhead crane strap will need to be carefully adjusted for proper balancing.

14 Remove and label the wear pads from the extension cylinder.

NOTICE Pay careful attention to the location of each wear pad.

https://truckmanualshub.com/

4-3 Boom Lift Cylinder

How to Remove the Boom Lift Cylinder

WARNING Bodily injury hazard. This procedure requires specific repair skills, lifting equipment and a suitable workshop. Attempting this procedure without these skills and tools could result in death or serious injury and significant component damage. Dealer service is strongly recommended.

NOTICE When removing a hose assembly or fitting, the O-ring on the fitting and/or hose end must be replaced and then torqued to specification during installation.
Refer to Section Two, *Hydraulic Hose and Fitting Torque Specifications.*

1 Raise the boom to a horizontal position high enough that the boom lift cylinder rod-end can clear the boom lift cylinder mounting boss.

2 Remove the center turntable cover fasteners. Remove the cover.

3 Place support blocks under the boom lift cylinder across the turntable.

4 Attach an overhead 5 ton (4536 kg) crane to the boom. Do not lift the boom.

5 Support the rod end of the boom lift cylinder with an overhead crane or similar lifting device.

WARNING Crushing hazard. The boom lift cylinder could become unbalanced and fall when it is disconnected from the machine if it is not properly supported.

6 Tag, disconnect and plug the boom lift cylinder hydraulic hoses. Cap the fittings on the cylinder.

WARNING Bodily injury hazard. Spraying hydraulic oil can penetrate and burn skin. Loosen hydraulic connections very slowly to allow the oil pressure to dissipate gradually. Do not allow oil to squirt or spray.

7 Remove the pin retaining fastener from the boom lift cylinder rod-end pivot pin. Use a soft metal drift to remove the pin, and lower the lift cylinder onto the blocks. Protect the cylinder rod from damage.

WARNING Crushing hazard. The boom lift cylinder may become unbalanced and fall when it is disconnected from the machine if it is not properly supported.

8 Remove the mounting fasteners from the barrel-end cylinder pin retaining plates.

9 With the lift cylinder being supported by the overhead crane, pull the cylinder toward the platform and remove it from the machine.

WARNING Crushing hazard. The lift cylinder may become unbalanced and fall if it is not properly supported.

CAUTION Component damage hazard. The cables and hydraulic hoses can be damaged if the lift cylinder is pulled across them.

https://truckmanualshub.com/

BOOM COMPONENTS

4-4 Extension Cylinders

The extension cylinder consists of two cylinders that are fastened together. The first cylinder extends and retracts the number 2 boom tube. The second cylinder extends and retracts the number 3 boom tube.The extension cylinders are equipped with counterbalance valves to prevent movement in the event of a hydraulic line failure.

How to Remove the Extension Cylinders

WARNING This procedure requires specific repair skills, lifting equipment and a suitable workshop. Attempting this procedure without these skills and tools could result in death or serious injury and significant component damage. Dealer service is strongly recommended.

NOTICE When removing a hose assembly or fitting, the O-ring on the fitting and/or hose end must be replaced and then torqued to specification during installation.
Refer to Section Two, *Hydraulic Hose and Fitting Torque Specifications.*

1 Raise the boom to a horizontal position, fully extend the boom and fully lower the platform.

2 Remove the 2 bolts that are located on each side of the number 3 boom tube near the platform end of the number 2 boom tube.

3 Place a 4 in x 4 in x 6 ft (183 cm) block on top of the number 3 boom tube and place one end of the block against the weldment at the platform end of the boom.

4 Retract the boom until the number 2 boom tube is fully retracted into the number 1 boom tube.

NOTICE The number 3 boom tube will remain extended 6 feet (183 cm).

5 Remove the external snap rings from the extension cylinder rod-end pin at the platform end. Use a soft metal drift to remove the pin.

6 Remove the turntable end cover.

7 Support the barrel end of the master cylinder with a lifting device.

8 Remove the pin retaining fastener from the master cylinder barrel-end pivot pin. Place a rod through the pin and twist to remove the pin.

NOTICE Use the platform level toggle switch to relieve pressure on the master cylinder barrel-end pivot pin.

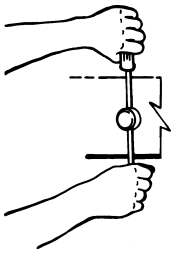

9 Lay the master cylinder down. Protect the cylinder rod from damage.

https://truckmanualshub.com/

10 Remove the external snap rings from the extension cylinder rod-end pivot pin at the pivot end of the boom. Use a soft metal drift to remove the pin through the access holes in the turntable riser.

11 Cut and remove the plastic ties from the hydraulic hoses.

12 Activate auxiliary power and move the boom extend toggle switch in the EXTEND direction and extend the extension cylinder out the pivot end of the boom approximately 1 foot (0.3 m).

13 Tag, disconnect and plug the extension cylinder hydraulic hoses. Cap the fittings on the cylinder.

⚠WARNING Bodily injury hazard. Spraying hydraulic oil can penetrate and burn skin. Loosen hydraulic connections very slowly to allow the oil pressure to dissipate gradually. Do not allow oil to squirt or spray.

14 Attach a lifting strap from an overhead crane to the rod end of the extension cylinder and lift slightly to relieve the pressure on the trunnion pins.

15 Remove the trunnion pin access covers from both sides of the number 1 boom tube at the pivot end of the boom.

16 Remove the trunnion pin retaining fastener and use a slide hammer to remove the pins.

17 Support and slide the extension cylinder out of the pivot end of the boom.

⚠WARNING Crushing hazard. The extension cylinder will fall when it is removed from the extension boom if it is not properly supported.

NOTICE Note the length of the cylinder after removal. The cylinder must be at the same length for installation.

https://truckmanualshub.com/

BOOM COMPONENTS

4-5 Platform Leveling Master Cylinder

The master cylinder acts as a pump for the slave cylinder. It is part of the closed loop hydraulic circuit that keeps the platform level through the entire range of boom motion. The master cylinder is located inside the pivot end of the boom.

How to Remove the Platform Leveling Master Cylinder

NOTICE When removing a hose assembly or fitting, the O-ring on the fitting and/or hose end must be replaced and then torqued to specification during installation.
Refer to Section Two, *Hydraulic Hose and Fitting Torque Specifications.*

1 Raise the boom until the master cylinder rod-end pivot pin is accessible.

2 Remove the turntable end cover to access the master cylinder.

3 Tag, disconnect and plug the master cylinder hydraulic hoses. Cap the fittings on the cylinder.

⚠WARNING Bodily injury hazard. Spraying hydraulic oil can penetrate and burn skin. Loosen hydraulic connections very slowly to allow the oil pressure to dissipate gradually. Do not allow oil to squirt or spray.

4 Remove the pin retaining fastener from the master cylinder barrel-end pivot pin.

5 Place a rod through the barel-end pivot pin and twist to remove the pin.

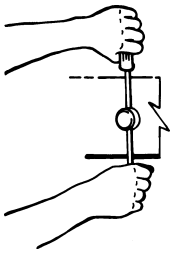

6 Attach a lifting strap from an overhead crane to the lug on the barrel end of the master cylinder.

7 Remove the pin retaining fastener from the barrel-end pivot pin.

8 Place a rod through the rod-end pivot pin and twist to remove the pin.

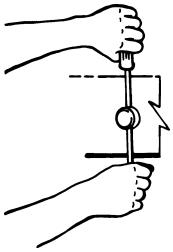

⚠WARNING Crushing hazard. The master cylinder could become unbalanced and fall if it is not properly supported by the lifting device.

https://truckmanualshub.com/

Turntable Covers

5-1 Turntable Covers

How to Remove a Turntable Cover

1 Raise the turntable cover. Support and secure the open cover with an overhead crane or forklift. Do not lift the cover.

WARNING Crushing hazard. Due to its heavy weight, do not attempt to support the cover by hand.

CAUTION Component damage hazard. Protect the cover from damage by using carpet or padding on the crane or forkliftforks.

2 Remove the upper retaining clip from the gas strut.

3 Gently pry the strut pivot socket off of the ball stud and lower the strut. Protect the strut cylinder rod from damage.

NOTICE Mark the location of the hinge support bracket on the bulkhead to ensure proper cover alignment during installation.

4 Remove the cover hinge bolts that fasten the hinge support bracket to the bulkhead.

5 Carefully lift and remove the cover from the machine.

WARNING Bodily injury hazard. Safety decals are essential to safe machine operation. Failure to replace all safety and instructional decals could result in death or serious injury. If a turntable cover must be replaced, be sure that all appropriate safety and instructional decals are applied to the new cover.

WARNING Crushing hazard. The turntable cover could become unbalanced and fall if it is not properly supported and secured to an appropriate lifting device.

NOTICE Alignment adjustments may be necessary when a new cover is installed.

https://truckmanualshub.com/

Deutz F4L 1011F Engine

6-1 RPM Adjustment

Refer to Maintenance Procedures, B-6, *Check and Adjust the Engine RPM.*

6-2 Flex Plate

The flex plate acts as a coupler between the engine and the pump. It is bolted to the engine flywheel and has a splined center to drive the pump.

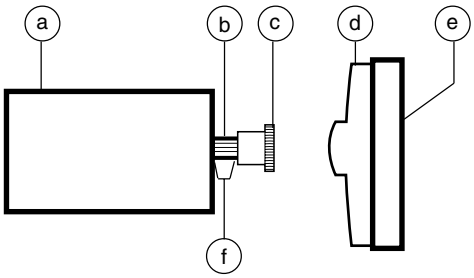

a pump
b pump shaft
c coupler
d flex plate with raised spline
e flywheel
f 3/8 inch (9.5 mm) gap

How to Remove the Flex Plate

1 Disconnect the wiring plug at the electronic displacement controller (EDC), located on the drive pump.

2 Support the drive pump with an appropriate lifting device. Remove all of the pump mounting plate to engine bell housing bolts.

3 Carefully pull the pump away from the engine and secure it from moving.

CAUTION Component damage hazard. Hoses can be damaged if they are kinked or pinched.

4 Remove the flex plate mounting fasteners, then remove the flex plate from the engine flywheel.

How to Install the Flex Plate

1 Install the flex plate onto the engine flywheel with the raised spline towards the pump. Torque the flex plate mounting bolts to 34 ft-lbs (46 Nm).

2 Install the pump coupler onto the pump shaft with the set screw toward the pump. Leave a 3/8 inch (9.5 mm) gap between the pump coupler and pump end plate.

3 Apply removable thread locking material to the pump coupler set screw. Torque the set screw to 45 ft-lbs (61 Nm).

CAUTION Component damage hazard. Do not force the drive pump during installation or the flex plate teeth may become damaged.

4 Install the pump and torque the pump mounting plate fasteners to 34 ft-lbs (46 Nm).

https://truckmanualshub.com/

6-3 Oil Temperature and Oil Pressure Gauges

The engine oil temperature gauge is an electrical gauge. The engine oil temperature sending unit has limit contacts that are factory set. The contacts will close at approximately 300° F (149° C). When the contacts close, the engine will shut off to prevent damage and will not start until the temperature drops below the contact point. Engine oil temperature will be indicated on the gauge when the key is ON and the Emergency Stop Button is pulled out to the ON position.

The engine oil pressure gauge is an electrical gauge. The engine oil pressure sending unit has limit contacts that are factory set. The contacts will close at approximately 7 psi (0.48 bar). When the contacts close, the engine will shut off to prevent damage. Engine oil pressure will be indicated on the gauge when the engine is running.

How to Remove the Oil Temperature and Oil Pressure Gauge Sending Units

NOTICE Perform this procedure with the engine off.

1 Remove the fasteners from the engine side cover, remove the cover.

2 Tag and disconnect the wiring from the desired sending unit. Remove the sending unit from the engine block.

3 Install the new sending unit. Do not over tighten.

4 Connect the wires to the new sending unit.

⚠CAUTION Burn hazard. Contact with hot engine fluids or components may cause severe burns.

NOTICE Always use pipe thread sealant when installing a sending unit.

Oil temperature sending unit specifications	
Torque	8-10 ft-lbs 11-14 Nm
Hex size	13/16 inch
Temperature switch point	300° F 149° C

Oil pressure sending unit specifications	
Torque	8-10 ft-lbs 11-14 Nm
Hex size	1 1/16 inch
Oil pressure switch point	7 psi 0.48 bar

https://truckmanualshub.com/

Perkins 704-30 Engine

7-1 RPM Adjustment

Refer to Maintenance Procedures, B-6, *Check and Adjust the Engine RPM.*

7-2 Flex Plate

The flex plate acts as a coupler between the engine and the pump. It is bolted to the engine flywheel and has a splined center to drive the pump.

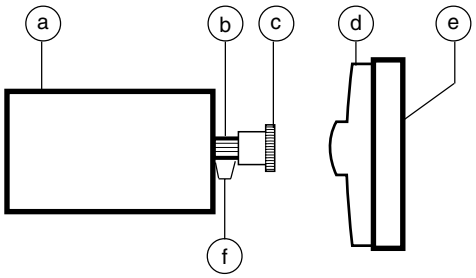

a pump
b pump shaft
c coupler
d flex plate with raised spline
e flywheel
f 1/4 inch (6.4 mm) gap

How to Remove the Flex Plate

1 Disconnect the wiring plug at the electronic displacement controller (EDC), located on the drive pump.

2 Support the drive pump with an appropriate lifting device. Then remove all of the pump mounting plate to engine bell housing bolts.

3 Carefully pull the pump away from the engine and secure it from moving.

CAUTION Component damage hazard. Hoses can be damaged if they are kinked or pinched.

4 Remove the flex plate mounting fasteners, then remove the flex plate from the engine flywheel.

How to Install the Flex Plate

1 Install the flex plate onto the engine flywheel with the raised spline towards the pump. Torque the flex plate mounting bolts to 34 ft-lbs (46 Nm).

2 Install the pump coupler onto the pump shaft with the set screw toward the pump. Leave a 1/4 inch (6.4 mm) gap between the pump coupler and pump end plate.

3 Apply removable thread locking material to the pump coupler set screw. Torque the set screw to 45 ft-lbs (61 Nm).

CAUTION Component damage hazard. Do not force the drive pump during installation or the flex plate teeth may become damaged.

4 Install the pump and torque the pump mounting plate fasteners to 34 ft-lbs (46 Nm).

https://truckmanualshub.com/

7-3 Coolant Temperature and Oil Pressure Gauges

The engine coolant temperature gauge is an electrical gauge. The engine coolant temperature sending unit has limit contacts that are factory set. The contacts will close at approximately 221° F (105° C). When the contacts close, the engine will shut off to prevent damage and will not start until the temperature drops below the contact point. Engine coolant temperature will be indicated on the gauge when the key is ON and the Emergency Stop Button is pulled out to the ON position.

The engine oil pressure gauge is an electrical gauge. The engine oil presure sending unit has limit contacts that are factory set. The contacts will close at approximately 4.2 psi (0.3 bar). When the contacts close, the engine will shut off to prevent damage. Engine oil pressure will be indicated on the gauge when the engine is running.

How to Remove the Coolant Temperature and Oil Pressure Gauge Sending Units

NOTICE Perform this procedure with the engine off.

1 Tag and disconnect the wiring from the desired sending unit. Remove the sending unit from the engine block.

2 Install the new sending unit. Do not over tighten.

3 Connect the wires to the new sending unit.

⚠CAUTION Burn hazard. Contact with hot engine fluids or components may cause severe burns.

NOTICE Always use pipe thread sealant when installing a sending unit.

Coolant temperature sending unit specifications	
Torque	8-10 ft-lbs 11-14 Nm
Hex size	7/8 inch
Temperature switch point	221° F 105° C
Oil pressure sending unit specifications	
Torque	8-10 ft-lbs 11-14 Nm
Hex size	7/8 inch
Oil pressure switch point	4.2 psi 0.3 bar

https://truckmanualshub.com/

Ford LRG-425 EFI Engine

8-1 Timing Adjustment

NOTICE The ignition timing is controlled by the ECM and can only be adjusted by re-programming the ECM. If timing adjustment or service is required, please contact Genie Industries Service Department OR your local Ford dealer.

8-2 Flex Plate

The flex plate acts as a coupler between the engine and the pump. It is bolted to the engine flywheel and has a splined center to drive the pump.

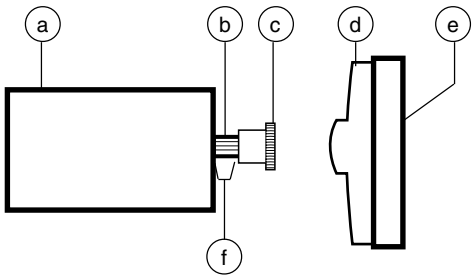

a pump
b pump shaft
c coupler
d flex plate with raised spline
e flywheel
f 1/16 inch gap

How to Remove the Flex Plate

1 Disconnect the wiring plug at the electronic displacement controller (EDC), located on the drive pump.

2 Support the drive pump with an appropriate lifting device. Then remove all of the pump mounting plate to engine bell housing bolts.

3 Carefully pull the pump away from the engine and secure it from moving.

CAUTION Component damage hazard. Hoses can be damaged if they are kinked or pinched.

4 Remove the flex plate mounting fasteners, then remove the flex plate from the engine fly wheel.

How to Install the Flex Plate

1 Install the flex plate onto the engine flywheel with the raised spline towards the pump. Torque the flex plate mounting bolts to 34 ft-lbs (46 Nm).

2 Install the pump coupler onto the pump shaft with the set screw towards the pump. Leave a 1/16 inch (1.59 mm) gap between the pump coupler and pump end plate.

3 Apply removable thread locking material to the pump coupler set screw. Torque the set screw to 45 ft-lbs (61 Nm).

CAUTION Component damage hazard. Do not force the drive pump during installation or the flex plate teeth may become damaged.

4 Install the pump and torque the pump mounting plate fasteners to 34 ft-lbs (46 Nm).

https://truckmanualshub.com/

8-3 Coolant Temperature and Oil Pressure Gauges

The engine coolant temperature gauge is an electrical gauge. The engine coolant temperture sending unit has limit contacts that are factory set. The contacts will close at approximately 230° F (110° C). When the contacts close, the engine will shut off to prevent damage and will not start until the temperature drops below the contact point. Engine coolant temperature will be indicated on the gauge when the key switch is ON and the Emergency Stop button is pulled out to the ON position.

The oil pressure gauge is an electrical gauge. The oil pressure sending unit has limit contacts that are factory set. The contacts will close at approximately 8 psi (0.55 bar). When the contacts close, the engine will shut off to prevent damage. Engine oil pressure will be indicated on the gauge when the engine is running.

How to Remove the Coolant Temperature and Oil Pressure Gauge Sending Units

NOTICE Perform this procedure with the engine off.

1 Remove the 2 engine pivot plate retaining bolts. Swing the engine pivot plate away from the machine to access the coolant temperature and oil pressure sending units.

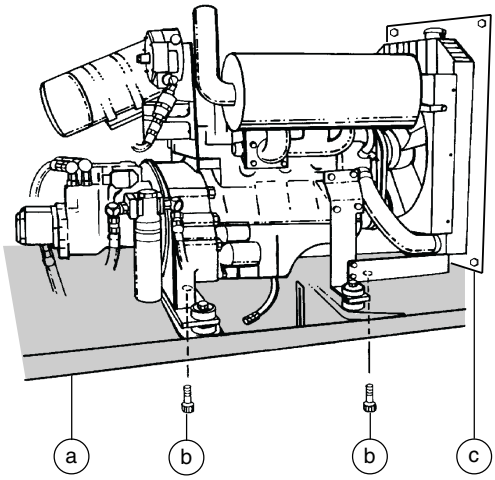

a engine pivot plate
b pivot plate retaining bolts
c air baffle

https://truckmanualshub.com/

FORD LRG-425 EFI ENGINE

2 Locate the oil pressure and coolant temperature sending units.

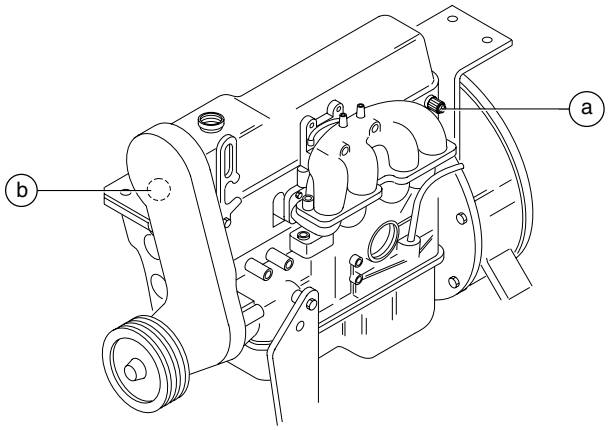

a oil pressure sending unit
b coolant temperature sending unit (hidded from view)

3 Tag and disconnect the wiring from the desired sending unit. Remove the sending unit from the engine block.

4 Install the new sending unit. Do not over tighten.

5 Connect the wires to the new sending unit.

CAUTION Burn hazard. Contact with hot engine fluids or components may cause severe burns.

NOTICE Always use pipe thread sealant when installing a sending unit.

Coolant temperature sending unit specifications	
Torque	8-10 ft-lbs 11-14 Nm
Hex size	13/16 inch
Temperature switch point	230° F 110° C

Oil pressure sending unit specifications	
Torque	8-10 ft-lbs 11-14 Nm
Hex size	1 1/16 inch
Oil pressure switch point	8 psi 0.55 bar

https://truckmanualshub.com/

Ground Controls

9-1 Control Relays

Relays used for single function switching are single pole double throw (SPDT) relays.

How to Test a Single Pole Double Throw Relay

⚠WARNING Electrocution hazard. Contact with electrically charged circuits could result in death or serious injury. Remove all rings, watches and other jewelry.

1 Label and then disconnect all the wiring from the relay to be tested.

2 Connect the leads from an ohmmeter or continuity tester to each terminal combination and check for continuity. Terminals 85 and 86 represent the coil and should not be tested in any other combination.

Test	Desired result
terminal 85 to 86 with resistor	75 to 85Ω
terminal 87 to 87a & 30	no continuity (infinite Ω)
terminal 87a to 30	continuity (zero Ω)

3 Connect 12V DC to terminal 85 and a ground wire to terminal 86, then test the following terminal combinations.

Test	Desired result
terminal 87 to 87a & 30	no continuity (infinite Ω)
terminal 87 to 30	continuity (zero Ω)

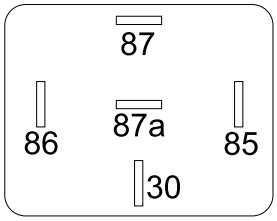

a terminal no. 87a - N.C.
b terminal no. 85 - coil negative (-)
c terminal no. 30 - common
d terminal no. 86 - coil positive (+)
e terminal no. 87 - N.O.

Control Relay Schematic - with resistor

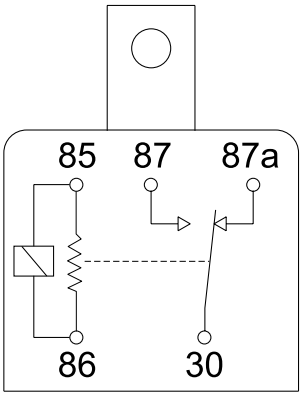

https://truckmanualshub.com/

GROUND CONTROLS

9-2
Power Relay

⚠WARNING Electrocution hazard. Contact with electrically charged circuits may result in death or serious injury. Remove all rings, watches and other jewelry.

NOTICE The power relay is mounted on the backside of the ground control box.

How to Test the Power Relay

⚠WARNING Electrocution hazard. Disconnect the ground cable from the battery before performing this procedure.

1 Connect the leads from an ohmmeter to each terminal combination and check for continuity.

Test	Desired result
2 small posts	12 to 16Ω
2 large posts	no continuity (infinite Ω)
Any small post to any large post	no continuity (infinite Ω)

2 Connect 12V DC to one of the small posts and a ground wire to the other small post, then test the following terminal combination.

Test	Desired result
2 large posts	continuity (zero Ω)

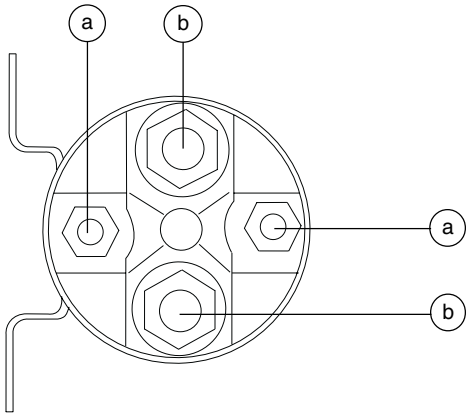

a solenoid activate coil terminal (small post)

b high amp power contact terminal (large post)

https://truckmanualshub.com/

9-3 Toggle Switches

See 1-4, *Toggle Switches*.

9-4 Wago® Components

How to Remove a Wago® Component

WARNING Electrocution hazard. Contact with electrically charged circuits could cause death or serious injury. Remove all rings, watches and other jewelry.

NOTICE Wago® tools are available from the Genie Service Parts Department (Genie part number 33996).

1 Label the wiring from the component to be removed.

2 Use a small screwdriver to push in and release the wire from the component.

3 Locate the removal tab on the bottom or top of the component.

4 Use a small screwdriver to gently pry up on the tab of the component and remove it.

9-5 Engine Fault Codes - Ford Models

How to Retrieve Engine Fault Codes

When a engine malfunction is detected by the Electronic Control Module (ECM), a fault code is recorded and the check engine light will turn ON at the ground and platform controls. Use the following procedure to retrieve the engine fault code to determine the engine malfunction.

NOTICE Perform this procedure with the key switch in the OFF position.

1 Open the ground controls side turntable cover.

2 Open the ground control box and locate the run/test toggle switch inside of the ground control box.

3 Pull out the ground controls Emergency Stop button to the ON position.

4 Hold the run/test toggle switch to the test position and turn the key switch to the ground controls position.

⊙ Result: The check engine light should turn on. The check engine light should begin to blink.

https://truckmanualshub.com/

GROUND CONTROLS

5 Continue to hold the run/test toggle switch in the test position and count the blinks.

NOTICE Fault codes are two digits. The check engine light will blink the first digit of a two digit code then will pause for 1.2 seconds and then blink the second digit. For example: the check engine light blinks 5 consecutive times then pauses for 1.2 seconds and then blinks 1 time. That would indicate code 51. The ECM is able to store up to six individual fault codes. There will be a 2.4 second pause between codes.

6 Refer to the Troubleshooting Section for definition of engine fault codes.

NOTICE Once a fault code has been retrieved and the repair has been completed, the ECM memory must be reset to clear the fault code from the ECM. See 9-5, *How to Clear Engine Fault Codes.*

How to Clear Engine Fault Codes from the ECM

NOTICE Perform this procedure with the engine off and the key switch in the OFF position.

1 Open the engine side turntable cover and locate the battery.

2 Disconnect the negative battery cable from the battery for a minimum of 20 minutes.

⚠WARNING Electrocution hazard. Contact with electrically charged circuits could result in death or serious injury. Remove all rings, watches and other jewelry.

3 Connect the negative battery cable to the battery.

⊙ Result: The check engine light should not turn on.

4 Start the engine and allow it to idle for approximately ten minutes.

⊙ Result: The check engine light should not turn on.

https://truckmanualshub.com/

Hydraulic Pumps

10-1 Lift/Steer Pump

How to Remove the Lift/Steer Pump

NOTICE When removing a hose assembly or fitting, the O-ring on the fitting and/or hose end must be replaced and then torqued to specification during installation.
Refer to Section Two, *Hydraulic Hose and Fitting Torque Specifications.*

1 Close the two hydraulic tank valves located at the hydraulic tank.

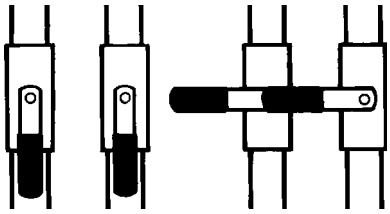

CAUTION Component damage hazard. The engine must not be started with the hydraulic tank shutoff valves in the CLOSED position or component damage will occur.
If the tank valves are closed, remove the key from the key switch and tag the machine to inform personnel of the condition.

2 Tag, disconnect and plug the lift/steer pump hydraulic hoses. Cap the fittings on the pump.

⚠WARNING Bodily injury hazard. Spraying hydraulic oil can penetrate and burn skin. Loosen hydraulic connections very slowly to allow the oil pressure to dissipate gradually. Do not allow oil to squirt or spray.

3 Remove the pump mounting fasteners. Carefully remove the pump.

CAUTION Component damage hazard.
Be sure to open the two hydraulic tank valves and prime the pump after installing the pump.
See 10-2, *How to Prime the Pump*.

https://truckmanualshub.com/

HYDRAULIC PUMPS

10-2 Drive Pump

The drive pump is a bi-directional variable displacement piston pump. The pump output is controlled by the electronic displacement controller (EDC), located on the pump. The only adjustment that can be made to the pump is the neutral or null adjustment. Any internal service to the pump should only be performed at an authorized Sundstrand-Sauer service center. Call Genie Industries Service Department to locate your local authorized service center.

How to Remove the Drive Pump

CAUTION Component damage hazard. The work area and surfaces where this procedure will be performed must be clean and free of debris that could get into the hydraulic system and cause severe component damage. Dealer service is recommended.

NOTICE When removing a hose assembly or fitting, the O-ring on the fitting and/or hose end must be replaced and then torqued to specification during installation.
Refer to Section Two, *Hydraulic Hose and Fitting Torque Specifications.*

1 Disconnect the electrical connection at the electronic displacement controller (EDC) located on the drive pump.

2 Close the two hydraulic tank valves located at the hydraulic tank.

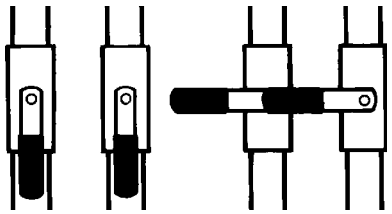

CAUTION Component damage hazard. The engine must not be started with the hydraulic tank shutoff valves in the CLOSED position or component damage will occur. If the tank valves are closed, remove the key from the key switch and tag the machine to inform personnel of the condition.

3 Tag, disconnect and plug the hydraulic hoses from the drive and lift/steer pumps. Cap the fittings on the pumps.

⚠WARNING Bodily injury hazard. Spraying hydraulic oil can penetrate and burn skin. Loosen hydraulic connections very slowly to allow the oil pressure to dissipate gradually. Do not allow oil to squirt or spray.

4 Support the pumps with a suitable lifting device and remove the two drive pump mounting fasteners.

5 Carefully pull the drive pump out until the pump coupler separates from the flex plate.

https://truckmanualshub.com/

6 Remove the drive pump from the machine.

CAUTION Component damage hazard. Be sure to open the two hydraulic tank valves and prime the pump after installing the pump.

NOTICE Before installing the pump, verify proper pump coupler spacing. Refer to the appropriate flex plate installation instructions for your engine.

How to Prime the Pump

CAUTION Component damage hazard. Be sure that the hydraulic tank shutoff valves are in the OPEN position before priming the pump. The engine must not be started with the hydraulic tank shutoff valves in the CLOSED position or component damage will occur.

1 Connect a 0 to 600 psi (0 to 41 bar) pressure gauge to the diagnostic nipple on the drive pump.

2 **Gasoline/LPG models:** Close the valve on the LPG tank, then disconnect the hose from the tank. Move the fuel select toggle switch to the LPG position.

Deutz Diesel models: Hold the manual fuel shutoff valve counterclockwise to the CLOSED position.

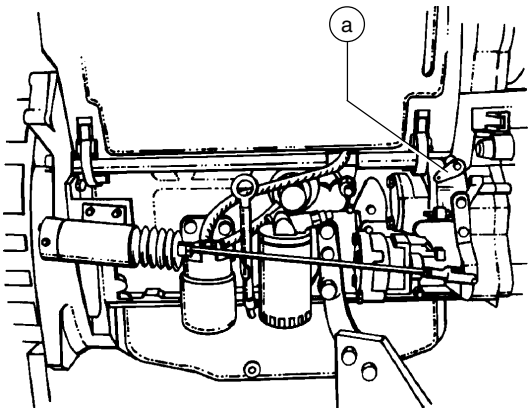

a manual fuel shutoff valve

Perkins Diesel models: Disconnect the engine wiring harness from the fuel solenoid at the injector pump.

3 Crank the engine with the starter motor for 15 seconds, wait 15 seconds, then crank the engine an additional 15 seconds or until the pressure reaches 300 psi (20.68 bar).

4 **Gasoline/LPG models:** Connect the LPG hose to the LPG tank and open the valve on the tank.
Deutz Diesel models: Release the manual shutoff valve.
Perkins Diesel models: Connect the engine wiring harness to the fuel solenoid.

5 Start the engine from the ground controls and check for hydraulic leaks.

https://truckmanualshub.com/

Manifolds

11-1
Function Manifold Components

The function manifold is located on the tank side tray, behind the ground control box.

Index No.	Description	Schematic Item	Function	Torque
1	3 position 4 way DO3 valve	A	Turntable rotate left/right	30-35 in-lbs (3-4 Nm)
2	3 position 4 way DO3 valve	B	Boom up/down	30-35 in-lbs (3-4 Nm)
3	3 position 4 way DO3 valve	C	Boom extend/retract	30-35 in-lbs (3-4 Nm)
4	Check valve, pilot operated	D	Boom extend/retract circuit	11-13 ft-lbs (15-18 Nm)
5	Relief valve, 2300 psi (158 bar)	E	Boom down	25-30 ft-lbs (34-41 Nm)
6	Relief valve, 2500 psi (172 bar)	F	Boom extend	25-30 ft-lbs (34-41 Nm)
7	Solenoid valve - N.O. poppet	G	Hydraulic limit switch circuit	35-40 ft-lbs (47-54 Nm)
8	Flow regulator valve, 1.5 gpm (5.7 l/min)	H	Boom extend/retract circuit (prevents overflowing the proportional valve)	10-12 ft-lbs (14-16 Nm)
9	Flow regulator valve, 1.5 gpm (5.7 l/min)	I	Boom up/down circuit (prevents overflowing the proportional valve)	10-12 ft-lbs (14-16 Nm)
10	Flow regulator valve, 1.5 gpm (5.7 l/min)	J	Turntable rotate left/right (prevents overflowing the proportional valve)	10-12 ft-lbs (14-6 Nm)
11	Flow regulator valve, 0.2 gpm (0.78 l/min)	K	Hydraulic limit switch circuit	10-12 ft-lbs (14-16 Nm)
12	Flow regulator valve, 0.1 gpm (0.37 l/min)	L	Bleeds off differential sensing valves to tank	10-12 ft-lbs (14-6 Nm)
13	2 position 2 way directional valve	M	Hydraulic limit switch circuit	25-30 ft-lbs (34-41 Nm)
14	Check valve	N	Differential sensing circuit, boom extend/retract	11-13 ft-lbs (15-18 Nm)
15	Check valve	O	Differential sensing circuit, boom up/down	11-13 ft-lbs (15-18 Nm)
16	Proportional solenoid valve	P	Boom extend/retract	10-12 ft-lbs (14-16 Nm)
17	Check valve	Q	Differential sensing circuit, turntable rotate left/right	11-13 ft-lbs (15-18 Nm)
18	Proportional solenoid valve	R	Boom up/down	10-12 ft-lbs (14-16 Nm)
19	Check valve	S	Differential sensing circuit, platform level up	11-13 ft-lbs(15-18 Nm)

https://truckmanualshub.com/

MANIFOLDS

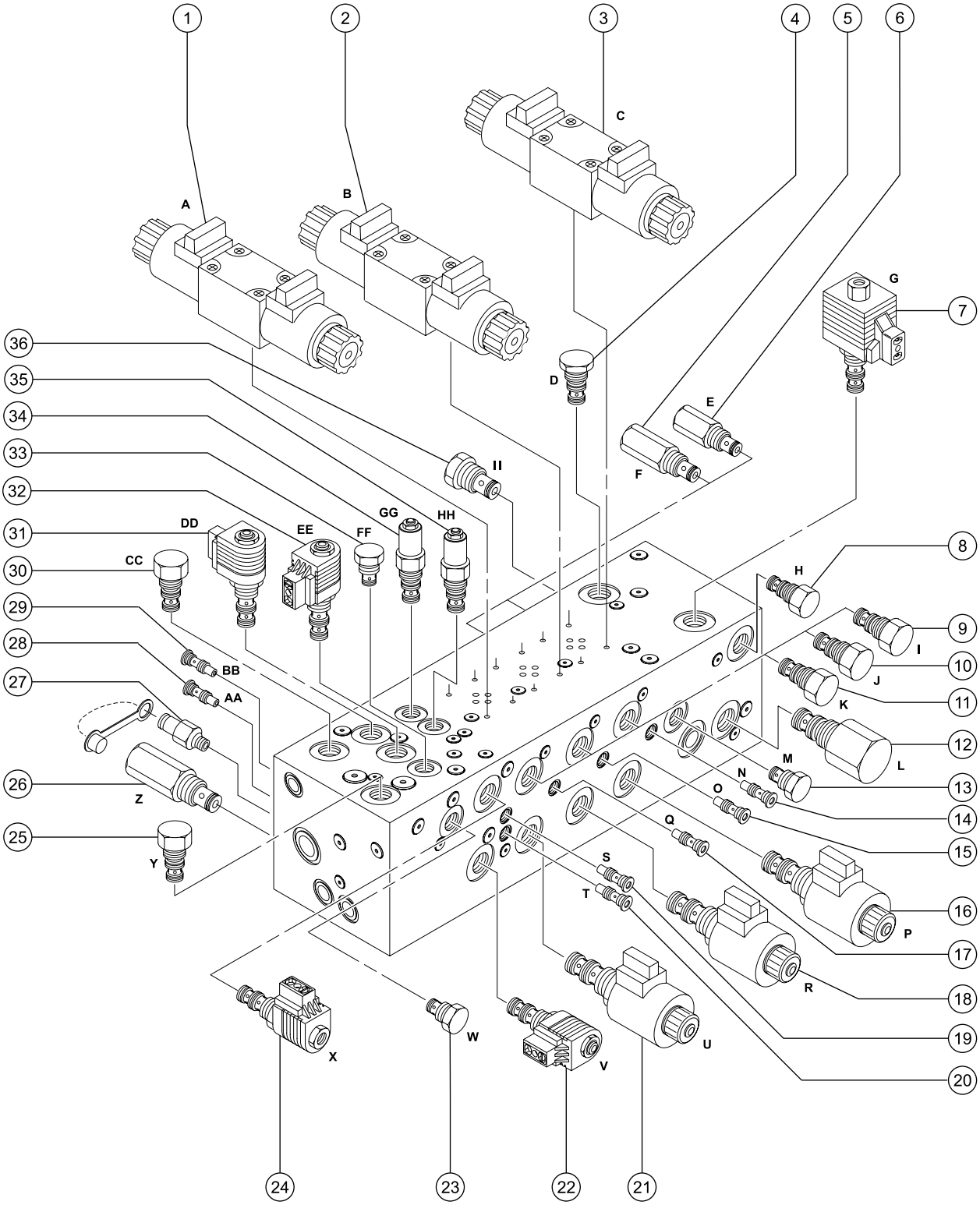

https://truckmanualshub.com/

MANIFOLDS

Function Manifold Components, continued

Index No.	Description	Schematic Item	Function	Torque
20	Check valve	T	Differential sensing circuit, platform level down	11-13 ft-lbs (15-18 Nm)
21	Proportional solenoid valve	U	Turntable rotate left/right	10-12 ft-lbs (14-16 Nm)
22	Solenoid valve - N.O. poppet	V	Platform level up	25-30 ft-lbs (34-41 Nm)
23	Flow regulator valve, 0.6 gpm (2.27 l/min)	W	Platform level circuit	10-12 ft-lbs (14-16 Nm)
24	Solenoid valve - N.O. poppet	X	Platform level down	25-30 ft-lbs (34-41 Nm)
25	Differential sensing valve	Y	Meters flow to functions	10-12 ft-lbs (14-16 Nm)
26	Relief valve, 2900 psi (200 bar)	Z	System relief	35-40 ft-lbs (47-54 Nm)
27	Diagnostic nipple		Testing	
28	Check valve	AA	Differential sensing circuit Platform rotate left	11-13 ft-lbs (15-18 Nm)
29	Check valve	BB	Differential sensing circuit Platform rotate right	11-13 ft-lbs (15-18 Nm)
30	Priority flow regulator valve, 5 gpm (18.9 l/min)	CC	Steering	10-12 ft-lbs (14-16 Nm)
31	Solenoid valve - N.O. poppet	DD	Platform rotate left/Jib boom up	25-30 ft-lbs (34-41 Nm)
32	Solenoid valve - N.O. poppet	EE	Platform rotate right/Jib boom down	25-30 ft-lbs (34-41 Nm)
33	Flow regulator valve, 0.6 gpm (2.27 l/min)	FF	Platform rotate	10-12 ft-lbs (14-16 Nm)
34	Counterbalance valve	GG	Platform level up	35-40 ft-lbs (47-54 Nm)
35	Counterbalance valve	HH	Platform level down	35-40 ft-lbs (47-54 Nm)
36	Check valve	II	Boom extend/retract circuit	11-13 ft-lbs (15-18 Nm)

Plug Torque Specifications

Description	Hex size	Torque
SAE No. 2	1/8	50 in-lbs (6 Nm)
SAE No. 4	3/16	13 ft-lbs (18 Nm)
SAE No. 6	1/4	18 ft-lbs (24 Nm)
SAE No. 8	5/16	50 ft-lbs (68 Nm)
SAE No. 10	9/16	55 ft-lbs (75 Nm)

Valve Coil Resistance Specifications

3 position 4 way directional valve, 10V (schematic items A, B and C)	3.2Ω
Solenoid valve - N.O. poppet (schematic item G)	5.4Ω
Proportional solenoid valve, 10V (schematic items P, R and U)	4.7Ω
Solenoid valve - N.O. poppet (schematic items V, X, DD and EE)	5.6Ω

https://truckmanualshub.com/

MANIFOLDS

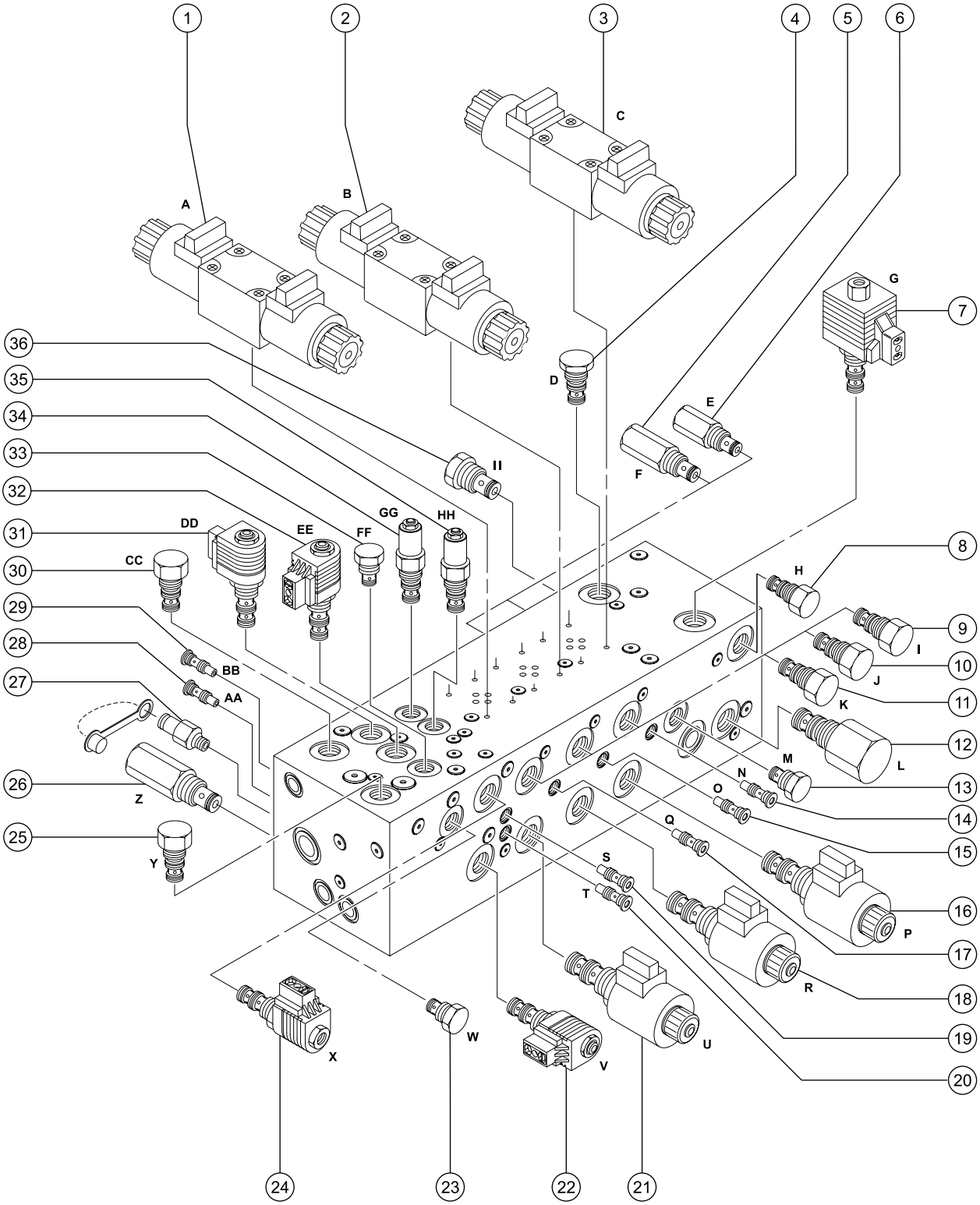

https://truckmanualshub.com/

MANIFOLDS

11-2 Valve Adjustments - Function Manifold

How to Adjust the System Relief Valve

NOTICE Perform this procedure with the boom in the stowed position.

1 Connect a 0 to 5000 psi (0 to 345 bar) pressure gauge to the diagnostic nipple (index 27) on the function manifold.

2 Start the engine from the ground controls.

3 Hold the function enable switch to the high idle side and activate and hold the retract switch with the boom fully retracted. Observe the pressure reading on the pressure gauge.

System relief valve specifications	
Pressure	2900 psi 200 bar

4 Turn the engine off. Use a wrench to hold the relief valve and remove the cap (index 26) on the function manifold.

5 Adjust the internal hex socket. Turn it clockwise to increase pressure or counterclockwise to decrease pressure. Install the relief valve cap.

⚠WARNING Tip-over hazard. Do not adjust the relief valves higher than specified.

6 Repeat steps 2 through 5 to confirm relief valve pressure.

How to Adjust the Boom Down Relief Valve

NOTICE Perform this procedure with the boom in the stowed position.

1 Connect a 0 to 5000 psi (0 to 345 bar) pressure gauge to the diagnostic nipple (index 27) on the function manifold.

2 Start the engine from the ground controls.

3 Hold the function enable switch to the high idle side and activate and hold the boom down toggle switch with the boom fully lowered. Observe the pressure reading on the pressure gauge.

Boom down relief valve specifications	
Pressure	2300 psi 158.5 bar

4 Turn the engine off. Use a wrench to hold the relief valve and remove the cap (index 5) on the function manifold.

5 Adjust the internal hex socket. Turn it clockwise to increase pressure or counterclockwise to decrease pressure. Install the relief valve cap.

⚠WARNING Tip-over hazard. Do not adjust the relief valves higher than specified.

6 Repeat steps 2 through 5 and confirm relief valve pressure.

https://truckmanualshub.com/

How to Adjust the Boom Extend Relief Valve

NOTICE Perform this procedure with the boom in the stowed position.

1 Connect a 0 to 3000 psi (0 to 207 bar) pressure gauge to the diagnostic nipple (index 27) on the function manifold.

2 Start the engine from the ground controls.

3 Hold the function enable switch to either side and hold the boom extend toggle switch with the boom fully extended. Observe the pressure reading on the pressure gauge.

Boom extend relief valve specifications	
Pressure	2500 psi 172 bar

4 Turn the engine off. Use a wrench to hold the relief valve and remove the cap (index 6) on the function manifold.

5 Adjust the internal hex socket. Turn it clockwise to increase the pressure or counterclockwise to decrease the pressure. Then install the relief valve cap.

⚠WARNING Tip-over hazard. Do not adjust the relief valves higher than specified.

6 Repeat steps 2 through 5 to confirm relief valve pressure.

How to Override a Valve

A hydraulic valve may need to be manually overridden to troubleshoot a malfunction. The proportional boom functions (boom up/down, extend/retract and turntable rotate) use a variable position proportional valve and a three position directional valve. Example: one position for boom up, one position for neutral and one position for boom down. The platform rotate function uses a three position valve. The platform level uses a three position and a two position valve. The three position valves and the proportional valves can be manually overridden. To identify the manifold valves see 11-1, *Function Manifold,* in this section.

1 Push the button on the end of the valve in ¼ inch (6 mm).

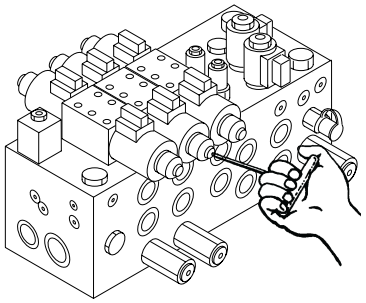

2 Hold the function enable switch to either side and move the ground control toggle switch for the function being overridden to operate the function.

⚠WARNING Collision hazard. Impact with moving boom components could result in death or serious injury. Use extreme caution when overriding a machine function. Identify the direction of machine movement before overriding a valve.

https://truckmanualshub.com/

MANIFOLDS

11-3
Turntable Rotation Manifold Components

The turntable rotation manifold is mounted to the turntable rotation motor on the tank side of the turntable.

ndex No.	Description	Schematic Item	Function	Torque
1	Shuttle valve, 2 position 3 way	JJ	Turntable rotation brake release	10-13 ft-lbs (14-18 Nm)
2	Counterbalance valve	KK	Turntable rotate left	35-40 ft-lbs (47-54 Nm)
3	Counterbalance valve	LL	Turntable rotate right	35-40 ft-lbs (47-54 Nm)

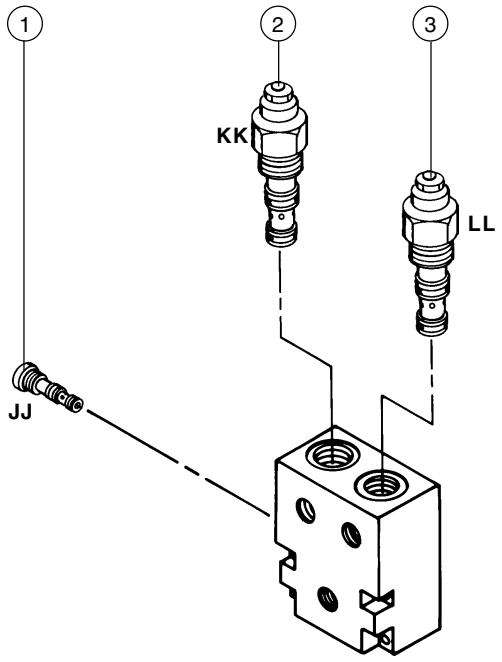

Plug Torque Specifications

Description	Hex size	Torque
SAE No. 2	1/8	50 in-lbs (6 Nm)
SAE No. 4	3/16	13 ft-lbs (18 Nm)
SAE No. 6	1/4	18 ft-lbs (24 Nm)

https://truckmanualshub.com/

11-4
Chassis Jack Manifold Components

The chassis jack manifold is mounted next to the drive manifold at the non-steer end.

Index No.	Description	Schematic Item	Function	Torque
1	Check valve	MM	Hydraulic limit switch circuit	35-40 ft-lbs (47-54 Nm)
2	Relief valve, 350 psi (24.1 bar)	NN	Chassis jack auto retract circuit	25-30 ft-lbs (34-41 Nm)
3	Counterbalance valve	OO	Steer end chassis jack circuit	35-40 ft-lbs (47-54 Nm)
4	Counterbalance valve	PP	Non-steer end chassis jack circuit	35-40 ft-lbs (47-54 Nm)

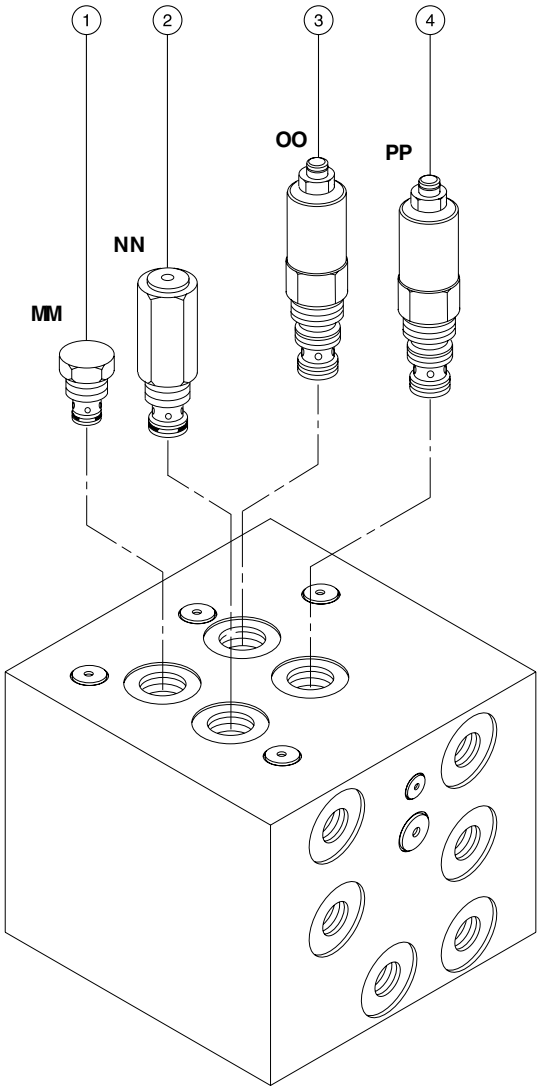

Plug Torque Specifications

Description	Hex size	Torque
SAE No. 2	1/8	50 in-lbs (6 Nm)
SAE No. 4	3/16	13 ft-lbs (18 Nm)
SAE No. 6	1/4	18 ft-lbs (24 Nm)

https://truckmanualshub.com/

MANIFOLDS

11-5
Axle Extend Dump Manifold Components

The axle extend dump manifold is mounted to the tank tray underneath the function manifold.

Index No.	Description	Schematic Item	Function	Torque
1	Check valve	QQ	Blocks flow back to pump	85-90 ft-lbs (115-122 Nm)
2	Relief valve, 200 psi (13.8 bar)	RR	Chassis jack relief circuit when boom is raised or extended	25-30 ft-lbs (34-41 Nm)
3	Solenoid valve - N.O.	SS	Allows chassis jacks to lift chassis when boom is in stowed position	25-30 ft-lbs (34-41 Nm)
4	Check valve	TT	Prevents flow from chassis jacks through auxiliary pump	25-30 ft-lbs (34-41 Nm)
5	Flow regulator, 0.3 gpm (1.14 l/min)	UU	Regulates flow to steer manifold	10-12 ft-lbs (14-16 Nm)

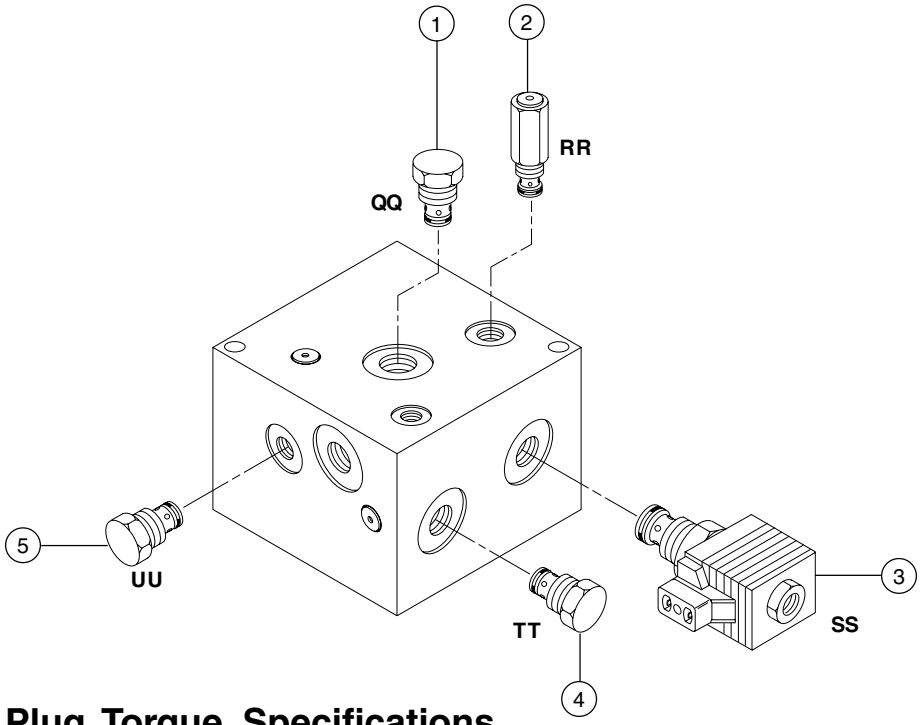

Plug Torque Specifications

Description	Hex size	Torque
SAE No. 2	1/8	50 in-lbs (6 Nm)
SAE No. 4	3/16	13 ft-lbs (18 Nm)
SAE No. 6	1/4	18 ft-lbs (24 Nm)

Valve Coil Resistance Specification

Solenoid valve, 10V (schematic item SS)	4.5 to 7.5Ω

https://truckmanualshub.com/

11-6
Steer Manifold Components

The steer manifold is mounted underneath the function manifold.

Index No.	Description	Schematic Item	Function	Torque
1	3 position 4 way solenoid valve	VV	Steer left/right	30-35 in-lbs (3-4 Nm)
2	Check valve	WW	Priority flow regulator circuit	10-12 ft-lbs (14-16 Nm)
3	Orifice plug, 0.025 inch (0.635 mm)	XX	Priority flow regulator circuit	
4	Priority flow regulator valve, 3.5 gpm (13.2 l/min)	YY	Regulates flow to axle extend dump manifold	10-12 ft-lbs (14-16 Nm)

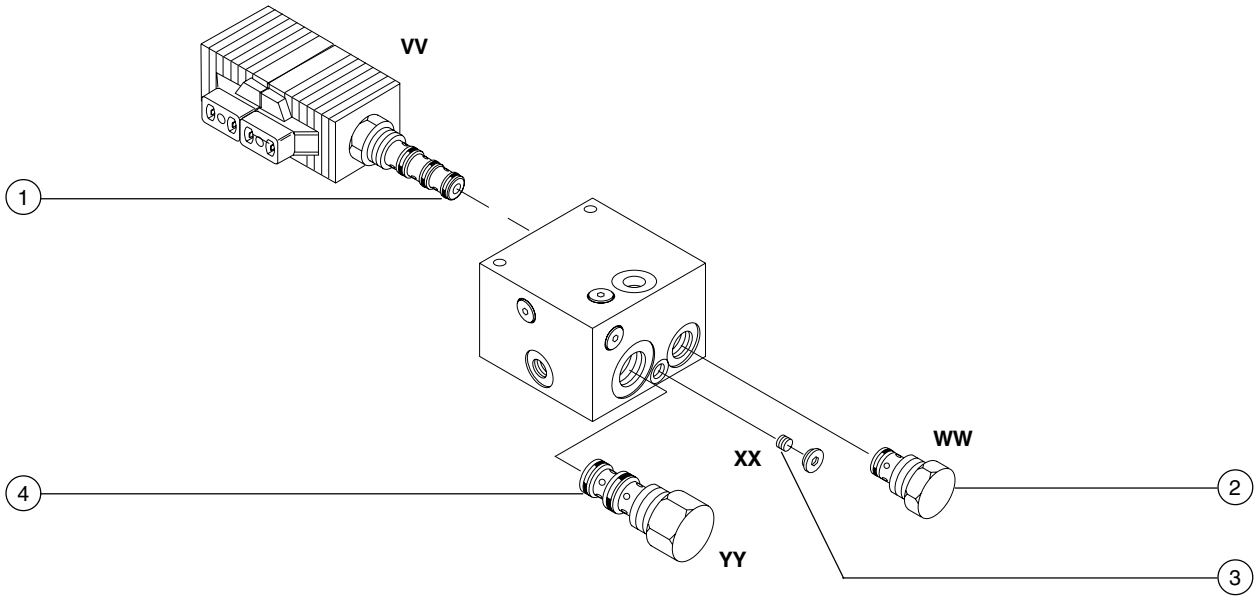

Plug Torque Specifications

Description	Hex size	Torque
SAE No. 2	1/8	50 in-lbs (6 Nm)
SAE No. 4	3/16	13 ft-lbs (18 Nm)
SAE No. 6	1/4	18 ft-lbs (24 Nm)

Valve Coil Resistance Specification

3 position 4 way solenoid valve, 10V (schematic item VV)	4.5 to 7.5Ω

https://truckmanualshub.com/

MANIFOLDS

11-7
2WD Drive Manifold Components

The drive manifold is mounted inside the drive chassis at the non-steer end.

Index No.	Description	Schematic Item	Function	Torque
1	Relief valve, 260 psi (18 bar)	ZZ	Charge pressure circuit	10-12 ft-lbs (14-16 Nm)
2	Flow divider/combiner valve	AB	Controls flow to drive motors in forward and reverse	25-30 ft-lbs (34-41 Nm)
3	Orifice, 0.07 in (1.8 mm)	AC	Drive circuit	
4	Shuttle valve, 3 position 3 way	AD	Charge pressure circuit that gets hot oil out of low pressure side of drive pump.	15-18 ft-lbs (20-24 Nm)
5	Diagnostic nipple		Testing	

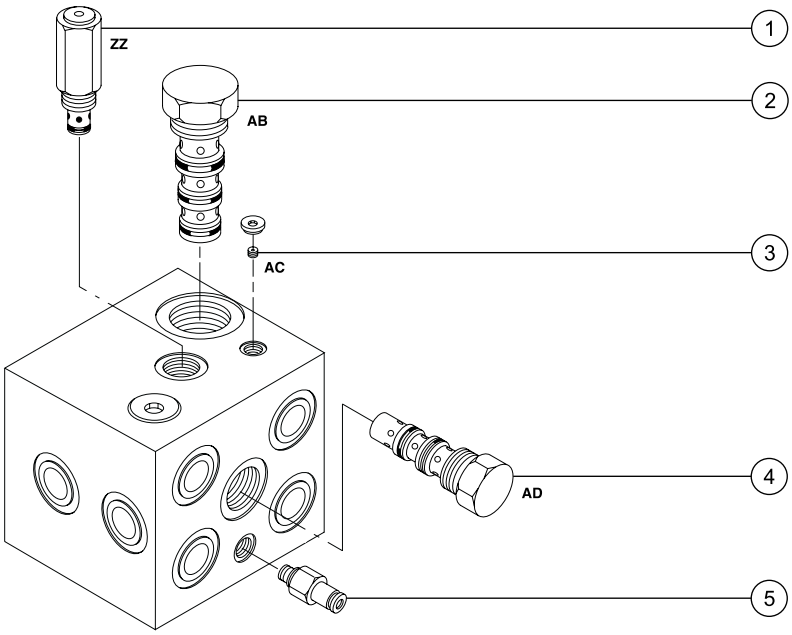

Plug Torque Specifications

Description	Hex size	Torque
SAE No. 4	3/16	13 ft-lbs (18 Nm)
SAE No. 6	1/4	18 ft-lbs (24 Nm)
SAE No. 8	5/16	50 ft-lbs (68 Nm)

https://truckmanualshub.com/

11-8 Valve Adjustments, 2WD Drive Manifold

How to Adjust the Hot Oil Shuttle Relief Valve

NOTICE The pressure differential between the charge pump relief valve (located in the drive pump) and the hot oil shuttle relief valve (located in the drive manifold) is necessary to return hot oil from the closed loop drive circuit to the hydraulic tank for cooling. This pressure differential must be maintained at 40 psi (14.5 bar).

NOTICE The following procedure will require two people.

1 Hold the hot oil shuttle relief valve with a wrench and remove the cap (index 1).

2 Turn the internal hex socket clockwise until it is fully seated. Install the valve cap.

3 Open the engine side turntable cover and connect a 0 to 600 psi (0 to 41 bar) pressure gauge to the diagnostic nipple on the drive pump.

4 Start the engine from the platform controls and allow the engine to run at low idle. Note the pressure reading on the pressure gauge.

5 Turn the engine off and connect a 0 to 600 psi (0 to 41 bar) pressure gauge to the diagnostic nipple (index 5) located on the drive manifold.

6 Start the engine from the platform controls and drive the machine slowly in the forward direction. Note the pressure reading on the pressure gauge.

7 Turn the engine off and remove the hot oil shuttle relief valve cap (index 1). Adjust the internal hex socket counterclockwise one full turn. Install the valve cap.

8 Start the engine from the platform controls. Drive the machine slowly in the forward direction and note the pressure reading on the pressure gauge.

9 Turn the engine off, and remove the hot oil shuttle relief valve cap (index 1). Adjust the internal hex socket clockwise to increase the pressure or counterclockwise to decrease the pressure. Install the valve cap.

10 Repeat steps 6 through 9 until a pressure differential (between the charge pump reading and the hot oil shuttle relief valve) of 40 psi (14.5 bar) is obtained.

Hot Oil Shuttle Relief valve specifications	
Pressure	260 psi 18 bar

https://truckmanualshub.com/

MANIFOLDS

11-9
4WD Drive Manifold Components

The drive manifold is mounted inside the drive chassis at the non-steer end.

Index No.	Description	Schematic Item	Function	Torque
1	Directional valve, 2 position 2 way	AE	High speed divider bypass N.C. Pilot to open	25-30 ft-lbs (34-41 Nm)
2	Flow divider/combiner valve	AF	Controls flow to flow divider/combiner valves 6 and 7	25-30 ft-lbs (34-41 Nm)
3	Relief valve, 260 psi (18 bar)	AG	Charge pressure circuit	10-12 ft-lbs (14-16 Nm)
4	Check valve, pilot to close	AH	Works in conjunction with Index no.12 in the high speed divider bypass circuit	10-12 ft-lbs (14-16 Nm)
5	Orifice - plug, 0.052 inch (1.32 mm)	AI	Steer end drive motor circuit	
6	Flow divider/combiner valve	AJ	Controls flow to steer end drive motors in forward and reverse	25-30 ft-lbs (34-41 Nm)
7	Flow divider/combiner valve	AK	Controls flow to non-steer end drive motors in forward and reverse	25-30 ft-lbs (34-41 Nm)
8	Orifice, 0.07 in (1.8 mm)	AL	Non-steer end drive motor circuit	
9	Orifice, 0.07 in (1.8 mm)	AM	Equalizes pressure on both sides of flow divider combiner valve Index no. 2	
10	Shuttle valve, 3 position 3 way	AN	Charge pressure circuit that gets hot oil out of low pressure side of drive pump	15-18 ft-lbs (20-24 Nm)
11	Diagnostic fitting		Testing	
12	Check valve	AO	Works in conjunction with Index no. 4 in the high speed divider bypass circuit	10-12 ft-lbs (14-16 Nm)

Plug Torque Specifications

Description	Hex size	Torque
SAE No. 4	3/16	13 ft-lbs (18 Nm)
SAE No. 6	1/4	18 ft-lbs (24 Nm)
SAE No. 8	5/16	50 ft-lbs (68 Nm)

https://truckmanualshub.com/

MANIFOLDS

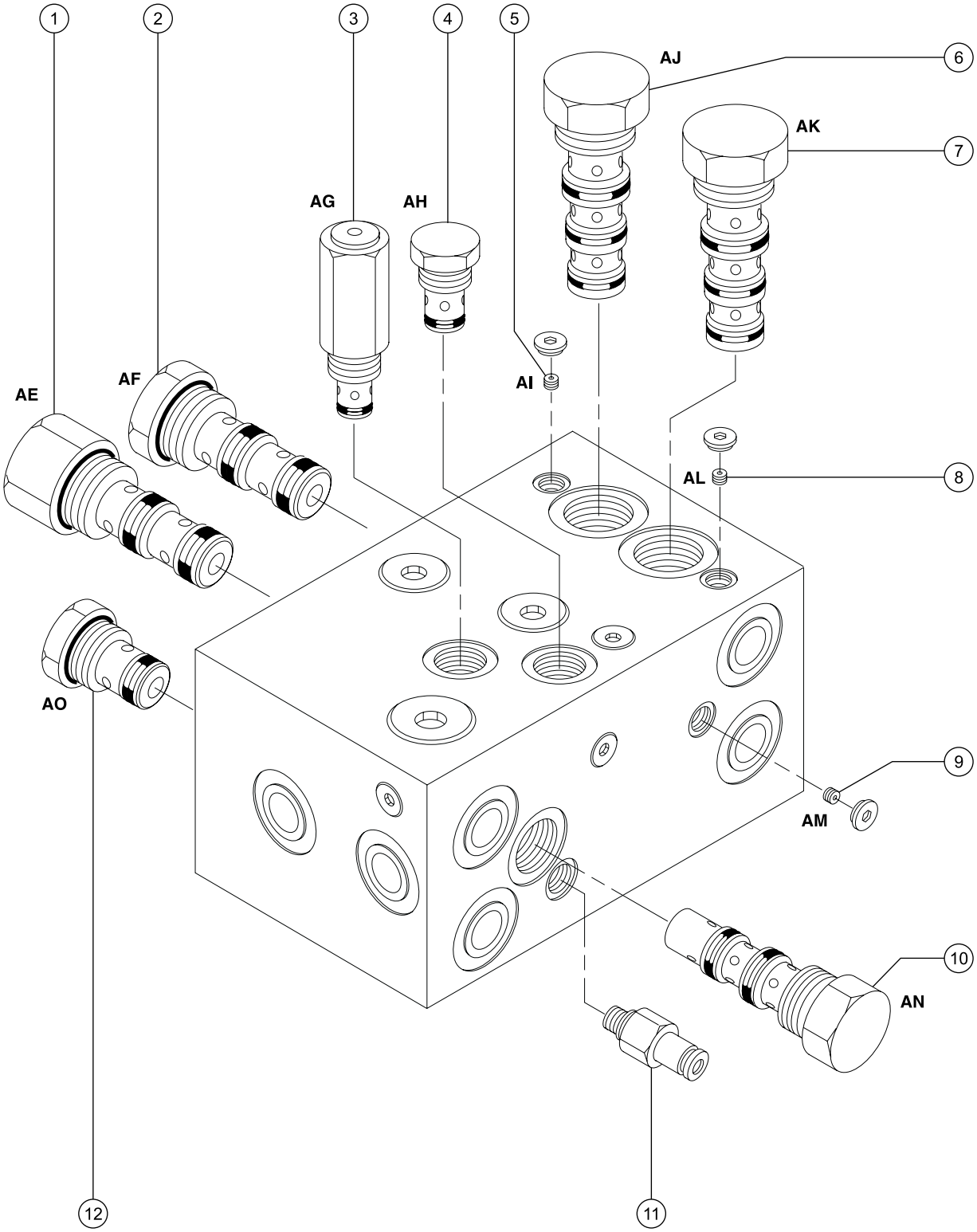

https://truckmanualshub.com/

MANIFOLDS

11-10 Valve Adjustments, 4WD Drive Manifold

How to Adjust the Hot Oil Shuttle Relief Valve

NOTICE The pressure differential between the charge pump relief valve (located in the drive pump) and the hot oil shuttle relief valve (located in the drive manifold) is necessary to return hot oil from the closed loop drive circuit to the hydraulic tank for cooling. This pressure differential must be maintained at 40 psi (14.5 bar).

NOTICE The following procedure will require two people.

1 Hold the hot oil shuttle relief valve with a wrench and remove the cap (index 3).

2 Turn the internal hex socket clockwise until it is fully seated. Install the valve cap.

3 Open the engine side turntable cover and connect a 0 to 600 psi (0 to 41 bar) pressure gauge to the diagnostic nipple on the drive pump.

4 Start the engine from the platform controls and allow the engine to run at low idle. Note the pressure reading on the pressure gauge.

5 Turn the engine off and connect a 0 to 600 psi (0 to 41 bar) pressure gauge to the diagnostic nipple (index 11) located on the drive manifold.

6 Start the engine from the platform controls and drive the machine slowly in the forward direction. Note the pressure reading on the pressure gauge.

7 Turn the engine off and remove the hot oil shuttle relief valve cap (index 3). Adjust the internal hex socket counterclockwise one full turn. Install the valve cap.

8 Start the engine from the platform controls. Drive the machine slowly in the forward direction and note the pressure reading on the pressure gauge.

9 Turn the engine off, and remove the hot oil shuttle relief valve cap (index 3). Adjust the internal hex socket clockwise to increase the pressure or counterclockwise to decrease the pressure. Install the valve cap.

10 Repeat steps 6 through 9 until a pressure differential (between the charge pump reading and the hot oil shuttle relief valve) of 40 psi (14.5 bar) is obtained.

Hot Oil Shuttle Relief valve specifications	
Pressure	260 psi 18 bar

https://truckmanualshub.com/

11-11
Jib Boom / Platform Rotate Manifold Components, S-85 Models

The jib boom/platform rotate manifold is mounted on the platform end of the boom.

Index No.	Description	Schematic Item	Function	Torque
1	2 position 3 way valve	AP	Platform rotate select	8-10 ft-lbs (11-14 Nm)
2	Orifice fitting, 0.030 inch (0.76 mm)	AQ	Platform rotate circuit	

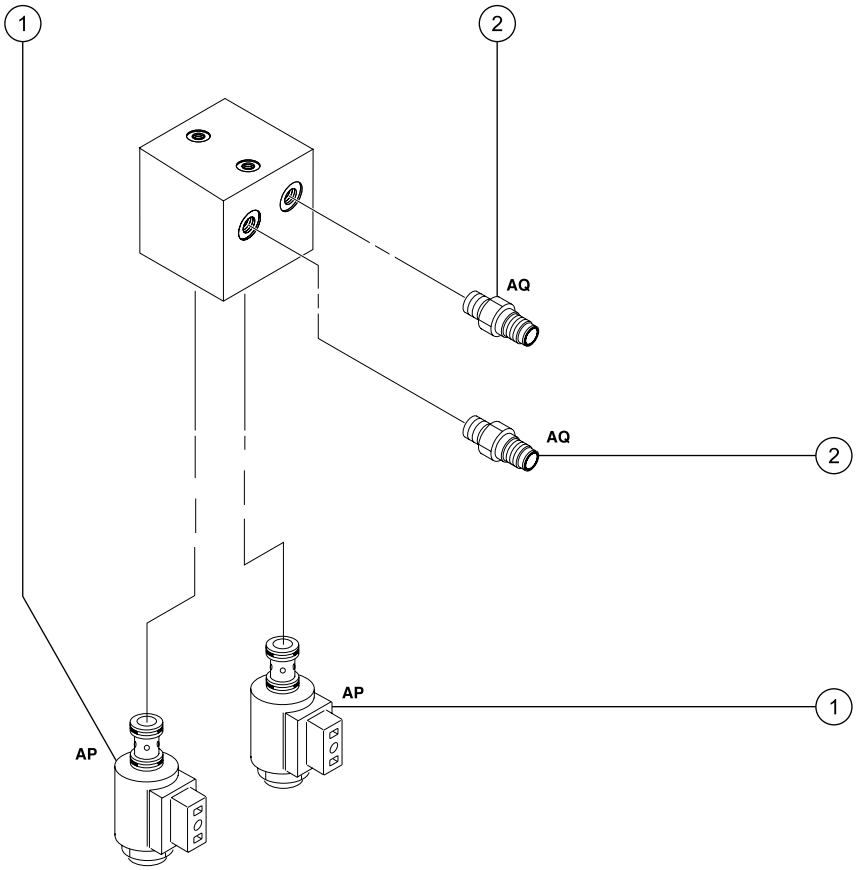

Valve Coil Resistance Specification

2 position 3 way solenoid valve, 10V (schematic item AP)	4.5 to 7.5Ω

https://truckmanualshub.com/

MANIFOLDS

11-12
Brake/Two Speed Manifold Components

The brake/two speed manifold is mounted on the engine tray.

Index No.	Description	Schematic Item	Function	Torque
1	2 position, 3 way valve	AR	Brake release	8-10 ft-lbs (11-14 Nm)
2	2 position, 3 way valve	AS	2-Speed wheel motors, (energized in high range to destroke the rear motor swash plates)	8-10 ft-lbs (11-14 Nm)
3	Orifice fitting, 0.025 inch (0.63 mm)	AT	Two speed/Brake circuit	

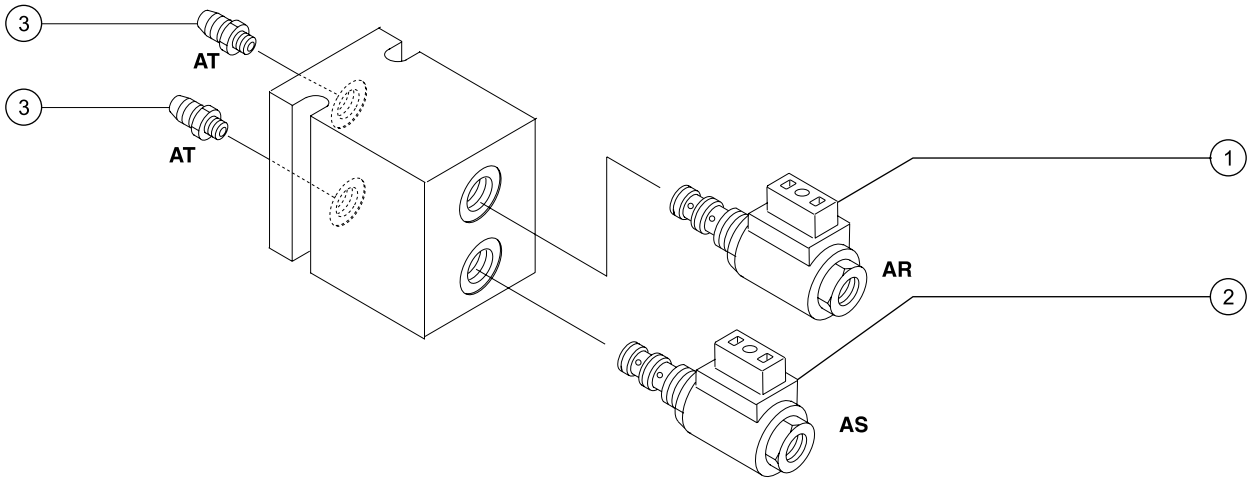

Valve Coil Resistance Specification

Solenoid valve, 2 position 3 way , 10V (schematic items AR and AS)	5.9 to 6.4Ω

https://truckmanualshub.com/

Fuel and Hydraulic Tanks

12-1 Fuel Tank

How to Remove the Fuel Tank

DANGER Explosion and fire hazard. Engine fuels are combustible. Remove the fuel tank in an open, well-ventilated area away from heaters, sparks, flames and lighted tobacco. Always have an approved fire extinguisher within easy reach.

DANGER Explosion and fire hazard. When transferring fuel, connect a grounding wire between the machine and pump or container.

1 Turn the manual fuel shutoff valve to the CLOSED position.

2 Remove the tank side turntable cover. See 5-1, *How to Remove a Turntable Cover.*

3 **Ford models:** Disconnect, drain and plug the fuel hose.

Diesel models: Disconnect, drain and plug the supply and return fuel hoses. Cap the fuel return fitting on the fuel tank.

4 **Metal tank:** Remove the fuel tank hold down straps retaining fasteners. Remove the straps from the fuel tank.

Plastic tank: Remove the fuel tank retaining fasteners.

5 Support the fuel tank with 2 lifting straps. Place one lifting strap at each end of the tank and attach the lifting straps to an overhead crane.

6 Remove the fuel tank from the machine.

WARNING Crushing hazard. The fuel tank could become unbalanced and fall when it is removed from the machine if it is not properly supported and secured to the overhead crane.

CAUTION Component damage hazard. When installing the plastic fuel tank, do not overtighten the retaining fasteners.

NOTICE Clean the fuel tank and inspect for rust and corrosion before installing.

https://truckmanualshub.com/

FUEL AND HYDRAULIC TANKS

12-2 Hydraulic Tank

The primary functions of the hydraulic tank are to cool, clean and deaerate the hydraulic fluid during operation. The tank utilizes internal suction strainers for the pump supply hoses and has an external return filter equipped with a filter condition indicator.

How to Remove the Hydraulic Tank

CAUTION Component damage hazard. The work area and surfaces where this procedure will be performed must be clean and free of debris that could get into the hydraulic system.

NOTICE When removing a hose assembly or fitting, the O-ring on the fitting and/or hose end must be replaced and then torqued to specification during installation.
Refer to Section Two, *Hydraulic Hose and Fitting Torque Specifications.*

1 Lower and retract the boom to the stowed position.

2 Remove the fuel tank. See 12-1, *How to Remove the Fuel Tank*.

3 Close the two hydraulic shutoff valves located at the hydraulic tank.

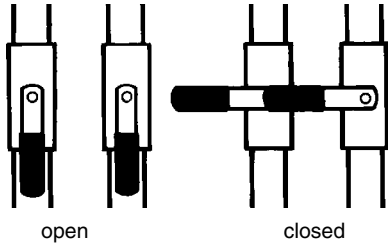

CAUTION Component damage hazard. The engine must not be started with the hydraulic tank shutoff valves in the CLOSED position or component damage will occur. If the tank valves are closed, remove the key from the key switch and tag the machine to inform personnel of the condition.

4 Remove the drain plug from the hydraulic tank.

5 Completely drain the tank into a suitable container. See capacity specifications.

6 Tag, disconnect and plug the two suction hoses that are attached to the hydraulic tank shutoff valves.

7 Disconnect and plug the T-fitting located at the return filter with the 2 hoses connected to it. Cap the fitting on the return filter housing.

8 Disconnect and plug the supply hose for the auxiliary power unit. Cap the fitting on the hydraulic tank.

https://truckmanualshub.com/

9 Remove the retaining fasteners from the hydraulic tank hold down straps. Remove the hold down straps from the hydraulic tank.

10 Support the hydraulic tank with 2 lifting straps. Place one lifting strap at each end of the tank and attach the lifting straps to an overhead crane.

11 Remove the hydraulic tank from the machine.

⚠WARNING Crushing hazard. The hydraulic tank could become unbalanced and fall if it is not properly supported and secured to the overhead crane.

12 Remove the suction strainers from the tank and clean them using a mild solvent.

13 Rinse out the inside of the tank using a mild solvent.

14 Install the suction strainers using pipe thread sealant on the threads.

15 Install the drain plug using pipe thread sealant on the threads.

16 Install the hydraulic tank onto the machine.

17 Install the two suction hoses and the supply hose for the auxiliary power unit.

18 Fill the tank with hydraulic oil until the level is within the top 2 inches (5 cm) of the sight gauge. Do not overfill.

19 Clean up any oil that may have spilled.

20 Open the hydraulic tank shutoff valves.

CAUTION Component damage hazard. Be sure to open the two hydraulic tank shutoff valves and prime the pump after installing the hydraulic tank.

NOTICE Always use pipe thread sealant when installing the drain plug and strainers.

NOTICE Use only Dexron equivalent hydraulic fluid.

Hydraulic system	
Hydraulic tank capacity	45 gallons 170 liters
Hydraulic system capacity (including tank)	55 gallons 208 liters
Hydraulic fluid	Dexron equivalent

https://truckmanualshub.com/

FUEL AND HYDRAULIC TANKS

How to Prime the Pump

CAUTION Component damage hazard. Be sure that the hydraulic tank shutoff valves are in the OPEN position before priming the pump. The engine must not be started with the hydraulic tank shutoff valves in the CLOSED position or component damage will occur.

1 Connect a 0 to 600 psi (0 to 41 bar) pressure gauge to the diagnostic nipple on the drive pump.

2 **Ford models:** Close the valve on the LPG tank, then disconnect the hose from the tank. Move the fuel select toggle switch to the LPG position.

Deutz models: Hold the manual fuel shutoff valve counterclockwise to the CLOSED position.

Perkins models: Disconnect the engine wiring harness from the fuel solenoid at the injector pump.

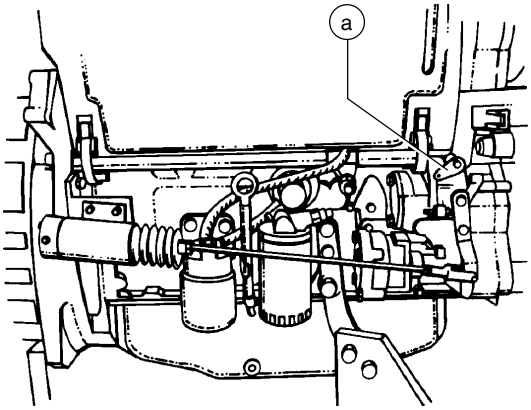

Deutz model
a manual fuel shutoff valve

3 Crank the engine with the starter motor for 15 seconds, wait 15 seconds, then crank the engine an additional 15 seconds or until the pressure reaches 250 psi (17.2 bar).

4 **Ford models:** Connect the LPG hose to the LPG tank and open the valve on the tank.

Deutz models: Release the manual shutoff valve.

Perkins models: Connect the engine wiring harness to the fuel solenoid.

5 Start the engine from the ground controls and check for hydraulic leaks.

https://truckmanualshub.com/

Turntable Rotation Components

13-1
Rotation Hydraulic Motor

How to Remove the Rotation Hydraulic Motor

NOTICE When removing a hose assembly or fitting, the O-ring on the fitting and/or hose end must be replaced and then torqued to specification during installation. Refer to Section Two, *Hydraulic Hose and Fitting Torque Specifications.*

1 Secure the turntable from rotating with the turntable rotation lock pin.

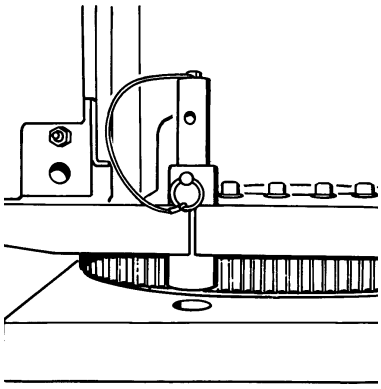

Unlocked position

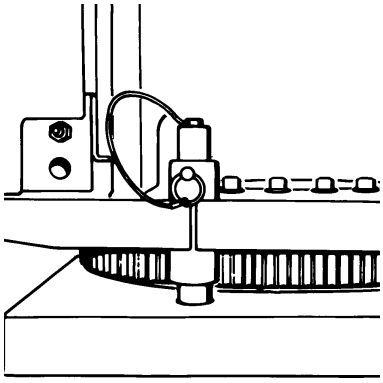

Locked position

2 Tag, disconnect and plug the hydraulic hoses from the motor, brake and manifold. Cap the fittings on the motor, brake and manifold.

⚠WARNING Bodily injury hazard. Spraying hydraulic oil can penetrate and burn skin. Loosen hydraulic connections very slowly to allow the oil pressure to dissipate gradually. Do not allow oil to squirt or spray.

3 Remove the motor/brake mounting fasteners, then remove the motor from the brake.

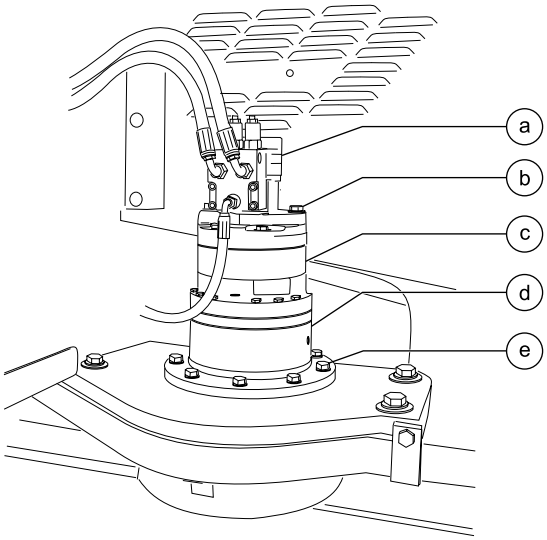

a motor
b motor/brake mounting bolts
c brake
d drive hub
e drive hub mounting bolts

https://truckmanualshub.com/

TURNTABLE ROTATION COMPONENTS

How to Remove the Turntable Rotation Brake or Drive Hub

1 Secure the turntable from rotating with the turntable rotation lock pin.

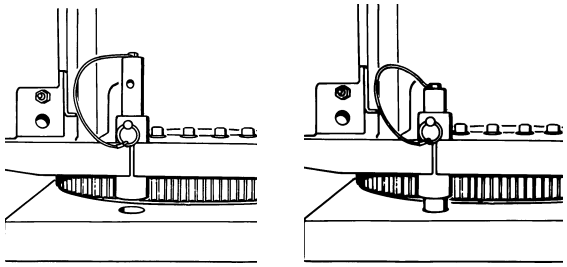

unlocked locked

2 Remove the motor, See 13-1, *How to Remove the Rotation Hydraulic Motor*.

CAUTION Component damage hazard. Hoses can be damaged if they are kinked or pinched.

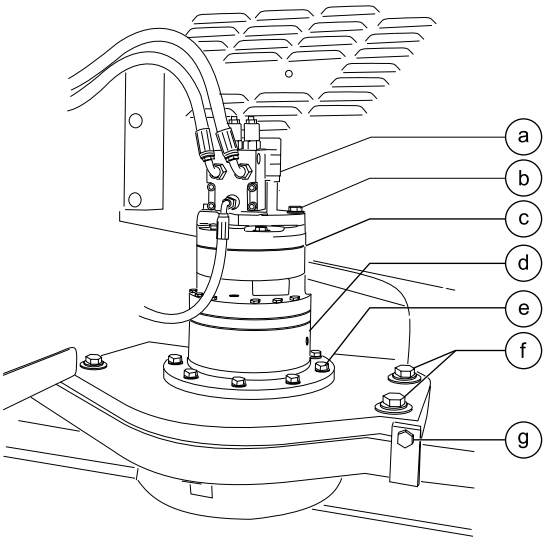

a motor
b motor/brake mounting bolts
c brake
d drive hub
e drive hub mounting bolts
f pivot plate mounting bolts
g adjustmetnt bolt with lock nut

3 Loosen the backlash pivot plate and adjustment bolts.

4 Remove the drive hub mounting bolts, then use an appropriate lifting device to remove the drive hub from the machine.

⚠WARNING Crushing hazard. The turntable rotate drive hub could become unbalanced and fall when it is removed from the machine if it is not properly supported.

5 Install the drive hub. Torque the drive hub mounting bolts to 180 ft-lbs (244 Nm).

6 Install the brake, then motor onto the drive hub. Torque the brake/motor mounting bolts to 75 ft-lbs (102 Nm).

7 Adjust turntable rotation gear backlash. See 13-1, *How to Adjust the Turntable Rotation Gear Backlash.*

https://truckmanualshub.com/

How to Adjust the Turntable Rotation Gear Backlash

The turntable rotation drive hub is mounted on an adjustable plate that controls the gap between the rotation motor gear and the turntable bearing ring gear.

NOTICE Be sure to check the backlash with the machine on a flat level surface.

1 Secure the turntable from rotating with the turntable rotation lock pin.

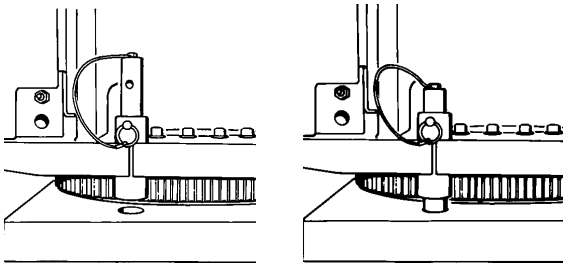

unlocked locked

2 Loosen the mounting fasteners on the drive hub pivot plate.

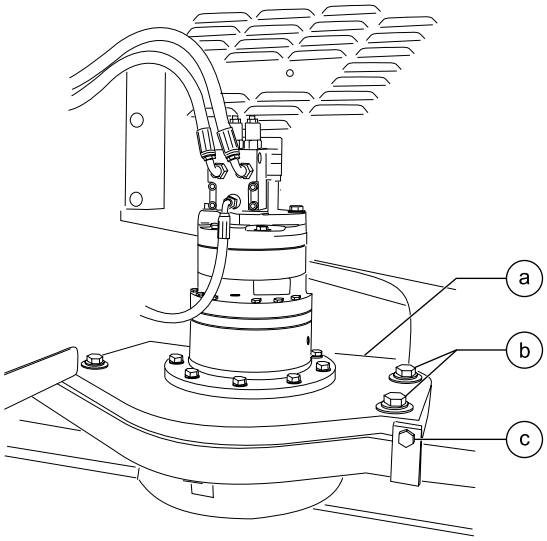

a drive hub pivot plate
b pivot plate mounting bolts
c adjustment bolt with lock nut

2 Push the drive hub pivot plate towards the turntable as far as possible (this will push the rotation gear into the turntable bearing ring gear).

3 Loosen the lock nut on the adjustment bolt.

4 Turn the adjustment bolt clockwise until it contacts the pivot plate.

5 Turn the adjustment bolt 1/2 turn counterclockwise. Tighten the lock nut on the adjustment bolt.

6 Rotate the drive hub pivot plate away from the turntable until it contacts the adjustment bolt. Then tighten the mounting fasteners on the drive hub pivot plate.

7 Rotate the turntable through an entire rotation. Check for tight spots that could cause binding. Readjust if necessary.

https://truckmanualshub.com/

2WD Steering Axle Components

14-1
Yoke and Hub

How to Remove the Yoke and Hub

1 Remove the pin retaining fastener from the steering cylinder rod-end pivot pin and the tie rod clevis pin. Remove the pivot pins.

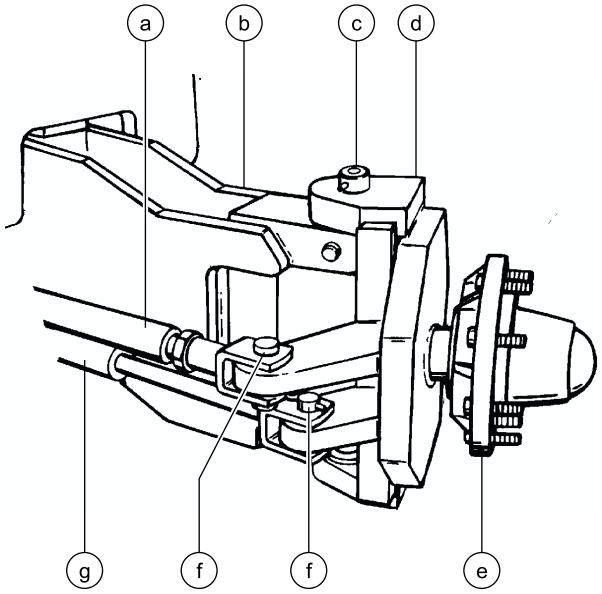

a tie rod
b axle
c yoke pivot pin
d yoke
e hub
f clevis pin
g steering cylinder

2 Loosen the wheel lug nuts. Do not remove them.

3 Block the non-steering wheels, and center a lifting jack of ample capacity under the steering axle.

4 Raise the machine approximately 6 inches (15 cm) and place blocks under the chassis for support.

5 Remove the lug nuts. Remove the tire and wheel assembly.

6 Remove the pin retaining fasteners from the yoke pivot pins.

7 Support and secure the yoke/hub assembly to a lifting jack.

8 Use a slide hammer to remove the upper yoke pivot pin.

9 Use a soft metal drift to drive the lower yoke pivot pin down and out.

⚠CAUTION Crushing hazard. The yoke/hub assembly could become unbalanced and fall when the yoke pivot pins are removed if it is not properly supported and secured to the lifting jack.

Torque specifications	
Lug nut torque, dry	420 ft-lbs 569.5 Nm
Lug nut torque, lubricated	320 ft-lbs 434 Nm

https://truckmanualshub.com/

How to Remove the Hub and Bearings

1 Loosen the wheel lug nuts. Do not remove them.

2 Block the non-steering wheels. Center a lifting jack of ample capacity under the steering axle.

3 Raise the machine approximately 6 inches (15 cm) and place blocks under the chassis for support.

4 Remove the lug nuts, then remove the tire and wheel assembly.

5 Remove the dust cap, cotter pin and castle nut.

NOTICE Always use a new cotter pin when installing a castle nut.

6 Pull the hub off the yoke spindle. The washer and outer bearing should fall loose from the hub.

7 Place the hub on a flat surface and gently pry the bearing seal out of the hub. Remove the inner bearing.

NOTICE Always install a new bearing seal when removing a hub.

How to Install the Hub and Bearings

NOTICE When replacing a wheel bearing, both the inner and outer bearings including the pressed-in races must be replaced.

1 Be sure that both bearings are packed with clean, fresh grease.

2 Place the large inner bearing into the rear of the hub.

3 Press the bearing seal evenly into the hub until it is flush.

4 Slide the hub onto the yoke spindle.

CAUTION Component damage. Do not apply excessive force or damage to the lip of the seal may occur.

5 Place the outer bearing into the hub.

6 Install the washer and castle nut.

7 Torque the castle nut to 35 ft-lbs (47 Nm) to seat the bearings.

8 Loosen the castle nut, then torque the castle nut to 8 ft-lbs (11 Nm).

9 Install a new cotter pin. Bend the cotter pin to lock it.

NOTICE Always use a new cotter pin when installing a castle nut.

10 Install the dust cap, then the tire and wheel assembly. Torque the wheel lug nuts to 420 ft-lbs (569.5 Nm).

https://truckmanualshub.com/

14-2 Steering Cylinders

How to Remove a Steering Cylinder

There are two identical steering cylinders that work in parallel. They are part of the same hydraulic circuit, but move in opposite directions. The tie rod maintains equal movement of the tires.

NOTICE When removing a hose assembly or fitting, the O-ring on the fitting and/or hose end must be replaced and then torqued to specification during installation.
Refer to Section Two, *Hydraulic Hose and Fitting Torque Specifications.*

1 Tag, disconnect and plug the hydraulic hoses from the steering cylinder. Cap the fittings on the cylinder.

⚠WARNING Bodily injury hazard. Spraying hydraulic oil can penetrate and burn skin. Loosen hydraulic connections very slowly to allow the oil pressure to dissipate gradually. Do not allow oil to squirt or spray.

2 **4WD Models:** Remove the hose bracket mounting fastener on the steer cylinder barrel-end pivot pin.

3 Remove the pin retaining fasteners from the steer cylinder pivot pins. Then remove the pivot pin from each end of the steering cylinder.

4 Remove the steering cylinder from the machine.

https://truckmanualshub.com/

14-3 Tie Rod Cylinder

How to Remove the Tie Rod Cylinder

1 Tag, disconnect and plug the hydraulic hoses from the tie rod cylinder. Cap the fittings on the cylinder.

WARNING Bodily injury hazard. Spraying hydraulic oil can penetrate and burn skin. Loosen hydraulic connections very slowly to allow the oil pressure to dissipate gradually. Do not allow oil to squirt or spray.

2 Support the tie rod cylinder with a lifting jack.

3 Remove the pin retaining fasteners, then remove the pivot pin from each end of the tie rod cylinder.

4 Remove the tie rod cylinder.

CAUTION Crushing hazard. The tie rod cylinder may become unbalanced and fall if it is not properly supported and secured to the lifting jack when it is removed from the machine.

How to Perform the Toe-in Adjustment

NOTICE Perform this procedure on a firm, level surface. Block the non-steering tires and be sure that the machine is in the stowed position.

1 Straighten the steer wheels.

2 Measure the steer tires, front to front and back to back, using a measuring fixture.

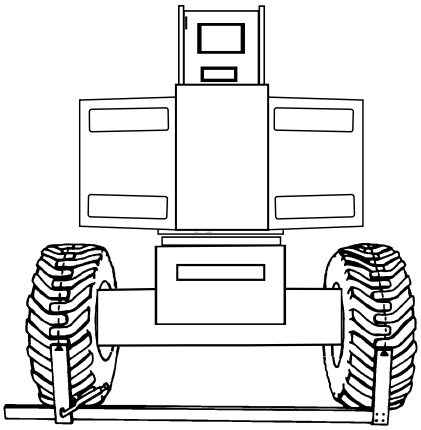

3 Center a lifting jack of ample capacity under the steering axle, then raise the machine.

4 Loosen the jam nut on the adjustable end of the tie rod cylinder.

5 Remove the pin retaining fasteners, then remove the pivot pin from the adjustable end of the tie rod cylinder.

6 Slide the tie rod cylinder off of the yoke and adjust it by turning the end.

NOTICE One half turn on the adjustable end equals approximately 1/4 inch (6.4 mm) change in the front and rear measurements.

7 Slide the tie rod cylinder onto the yoke. Install the pivot pin, then install the retaining bolt.

8 Tighten the jam nut against the tie rod cylinder.

9 Lower the machine and recheck the front and back measurements (step 2). If further adjustment is needed, repeat steps 3 through 8.

Toe-in specification	0 ± 1/8 inch (6.35 mm)

https://truckmanualshub.com/

4WD Steering Axle Components

15-1
Yoke and Hub

How to Remove the Yoke and Hub

The yoke installation utilizes bushings and a thrust washer that may require periodic replacement. The yoke must be removed before the drive hub can be removed.

NOTICE When removing a hose assembly or fitting, the O-ring on the fitting and/or hose end must be replaced and then torqued to specification during installation.
Refer to Section Two, *Hydraulic Hose and Fitting Torque Specifications.*

1 Remove the pin retaining fasteners from both the steering cylinder and the tie rod cylinder pivot pins. Remove the pins.

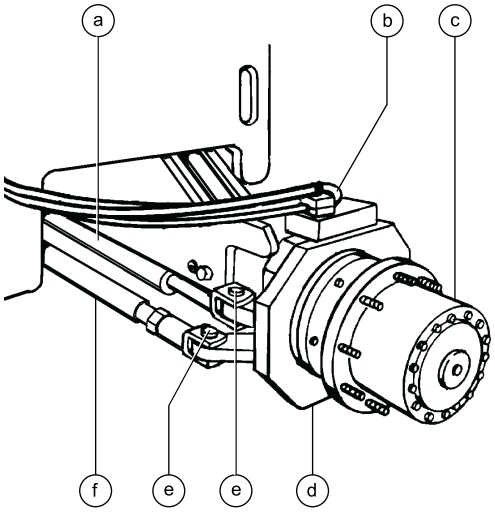

a steer cylinder
b yoke king pin
c drive hub
d yoke
e clevis pin
f tie rod cylinder

2 Tag, disconnect and plug the hydraulic hoses from the drive motor. Cap the fittngs on the drive motor.

⚠WARNING Bodily injury hazard. Spraying hydraulic oil can penetrate and burn skin. Loosen hydraulic connections very slowly to allow the oil pressure to dissipate gradually. Do not allow oil to squirt or spray.

3 Loosen the wheel lug nuts. Do not remove them.

4 Block the non-steering wheels, and center a lifting jack of ample capacity under the steering axle.

5 Raise the machine approximately 6 inches (15 cm) and place blocks under the chassis for support.

6 Remove the lug nuts, then remove the tire and wheel assembly.

7 Remove the hydraulic hose clamp retaining fastener from the top of the yoke pivot pin.

8 Remove the drive motor mounting fasteners.

9 Slide the drive motor shaft out of the drive hub and then remove the drive motor from the machine.

10 Remove the pin retaining fasteners from the upper and lower yoke pivot pins.

11 Support and secure the yoke/drive hub assembly to a lifting jack.

https://truckmanualshub.com/

12 Use a slide hammer to remove the upper yoke pivot pin, then use a soft metal drift to drive the lower yoke pivot pin down and out.

WARNING Crushing hazard. The yoke/hub assembly may become unbalanced and fall when the yoke pivot pins are removed if it is not properly secured and supported by the lifting jack.

13 Place the yoke/drive hub assembly on a flat surface with the drive hub facing down.

14 Remove the drive hub mounting fasteners that attach the drive hub to the yoke. Remove the drive hub from the yoke.

NOTICE Replace the thrust washer when installing the yoke/drive hub assembly onto the axle.

Torque specifications	
Lug nut, dry	420 ft-lbs 569.5 Nm
Lug nut torque, lubricated	320 ft-lbs 434 Nm
Drive hub mounting bolts, dry	247 ft-lbs 335 Nm
Drive hub mounting bolts, lubricate	185 ft-lbs 251 Nm
Drive motor mounting bolts, dry	75 ft-lbs 102 Nm
Drive motor mounting bolts, lubricated	56 ft-lbs 76 Nm

15-2 Steering Cylinders

How to Remove a Steering Cylinder

This procedure is the same as the 2WD procedure. See repair procedure 14-2, *How to Remove a Steering Cylinder*.

15-3 Tie Rod Cylinder

How to Remove the Tie Rod Cylinder

This procedure is the same as the 2WD procedure. See Repair Procedure 14-3, *How to Remove the Tie Rod Cylinder*.

How to Perform the Toe-in Adjustment

This procedure is the same as the 2WD procedure. See Repair Procedure 14-3, *How to Perform the Toe-in Adjustment*.

https://truckmanualshub.com/

Extendable Axle Components

16-1 Extendable Axles

The extendable axles are used to widen the foot print of the drive chassis for stability.

How to Shim the Outer Axle

NOTICE Measure each wear pad. Replace the wear pad if it is less than 7/16 inch (11 mm) thick. If the pad is more than 7/16 inch (11 mm) thick, perform the following procedure.

1 Extend the axle, then retract it 1 inch (25.4 mm).

2 Loosen the wear pad mounting fasteners.

3 Install the new shims under the wear pads to obtain zero clearance and zero drag.

4 Use a round punch to align the shim to the wear pad. Tighten the mounting fasteners.

5 Extend and retract the axle through an entire cycle. Check for tight spots that could cause binding or scraping.

NOTICE Always maintain squareness between the inner and outer axle tubes.

How to Shim the Inner Axle

Steer end:

NOTICE Measure each wear pad. Replace the wear pad if it is less than 7/16 inch (11 mm) thick. If the pad is more than 7/16 inch (11 mm) thick, perform the following procedure.

1 Remove the drice chassis cover.

2 Retract the axle, then extend the axle approximately 8 inches (203 mm).

3 Loosen the wear pad mounting fasteners on the top and side wear pads.

4 Install the new shims under the wear pads to obtain zero clearance and zero drag. Tighten the wear pad fasteners.

5 Extend and retract the axle through an entire cycle. Check for tight spots that could cause binding or scraping.

6 Install the drive chassis cover and fasteners.

NOTICE Always maintain squareness between the inner and outer axle tubes.

Non-steer end:

1 Remove the drive chassis cover.

2 Retract the axle, then extend the axle approximately 4 inches (101 mm).

3 Loosen the wear pad mounting fasteners on the top and side wear pads.

4 Install the new shims under the wear pads to obtain zero clearance and zero drag. Tighten the wear pad fasteners.

5 Extend and retract the axle through an entire cycle. Check for tight spots that could cause binding or scraping.

6 Install the drive chassis cover and fasteners.

NOTICE Always maintain squareness between the inner and outer axle tubes.

https://truckmanualshub.com/

How to Remove the Inner Axle

NOTICE When removing a hose assembly or fitting, the O-ring on the fitting and/or hose end must be replaced and then torqued to specification during installation.
Refer to Section Two, *Hydraulic Hose and Fitting Torque Specifications.*

⚠WARNING Bodily injury hazard. Spraying hydraulic oil can penetrate and burn skin. Loosen hydraulic connections very slowly to allow the oil pressure to dissipate gradually. Do not allow oil to squirt or spray.

Steer end:

1 Remove the drive chassis cover.

2 Retract the axle and remove the shims from the top wear pads of the inner axle.

NOTICE Pay careful attention to the location and number of shims used when removing the shims.

3 Extend the axle, then retract the axle approximately 1 inch (25 mm).

4 Loosen the axle limit switch actuator rod. Remove the mounting hardware from the linkage pivot plate.

5 Remove the actuator rod assembly and set it aside.

6 Loosen the wheel lug nuts. Do not remove them.

7 Block the wheels on the non-steer end of the machine, then center a lifting jack under the axle to be removed.

8 Raise the machine 15 inches (38 cm) and place blocks under the chassis for support.

9 Remove the lug nuts, then remove the tire and wheel assembly.

10 Remove the yoke and hub assembly. See 15-1, *How to Remove the Yoke and Hub*.

11 Remove the steer cylinder. See 14-2, *How to Remove a Steering Cylinder*.

12 Remove the steer cylinder mounting lug from the inner axle.

13 Remove the pin retaining fasteners from the tie rod cylinder. Remove the pins.

14 Remove the external snap ring from the axle extension cylinder pivot pin. Use a soft metal drift to remove the pin.

15 Tag, disconnect and plug the axle extension cylinder hydraulic hoses at the tee next to the chassis lift jack.

⚠WARNING Bodily injury hazard. Spraying hydraulic oil can penetrate and burn skin. Loosen hydraulic connections very slowly to allow the oil pressure to dissipate gradually. Do not allow oil to squirt or spray.

16 Attach a strap from a lifting device to the inner axle for support.

https://truckmanualshub.com/

EXTENDABLE AXLE COMPONENTS

17 Remove all wear pads between the inner and outer axle.

NOTICE Pay careful attention to the location and number of shims used when removing the wear pads.

18 Carefully pull the inner axle out of the outer axle tube.

⚠WARNING Crushing hazard. The inner axle may become unbalanced and fall if it is not properly supported when it is removed from the outer axle tube.

Non-steer end:

1 Remove the drive chassis cover.

2 Retract the axle and remove the shims from the top wear pads of the inner axle.

NOTICE Pay careful attention to the location and number of shims used when removing the shims.

3 Extend the axle, then retract the axle approximately 1 inch (25 mm).

4 Loosen the axle limit switch actuator rod. Remove the mounting hardware from the linkage pivot plate.

5 Remove the actuator rod assembly and set it aside.

6 Loosen the wheel lug nuts. Do not remove them.

7 Block the wheels on the steer end of the machine, then center a lifting jack under the axle to be removed.

8 Raise the machine 15 inches (38 cm) and place blocks under the chassis for support.

9 Remove the drive motor covers from both sides of the axle.

10 Tag, disconnect and plug the hoses on the drive motor and brake. Cap the fittings on the motor and brake.

⚠WARNING Bodily injury hazard. Spraying hydraulic oil can penetrate and burn skin. Loosen hydraulic connections very slowly to allow the oil pressure to dissipate gradually. Do not allow oil to squirt or spray.

11 Remove the pin retaining fasteners from the axle extension cylinder at the axle that is to be removed. Use a soft metal drift to remove the pin.

12 Attach a strap from a lifting device through the inner axle close to the drive hub for support.

13 Remove all wear pads between the inner and outer axles.

NOTICE Pay careful attention to the location and number of shims used when removing the wear pads.

14 Carefully remove the inner axle from the outer axle.

⚠WARNING Crushing hazard. The inner axle may become unbalanced and fall if it is not properly supported when it is removed from the outer axle tube.

https://truckmanualshub.com/

How to Remove the Axle Extension Cylinder

1 **Steer end:** Remove the yoke and hub assembly. See 14-1 2WD or 15-1 4WD, *How to Remove the Yoke and Hub.*

2 Remove the steering cylinder. See 14-2, *How to Remove a Steering Cylinder.*

3 Remove the inner axle. See 16-1, *How to Remove the Inner Axle.*

NOTICE Remove the inner axle at the barrel end of the axle extend cylinder.

4 Remove the drive chassis cover.

5 Tag, disconnect and plug the axle extend cylinder hoses and fittings at the tee junction on top of the outer axle. Plug the cylinder ports.

⚠WARNING Bodily injury hazard. Spraying hydraulic oil can penetrate and burn skin. Loosen hydraulic connections very slowly to allow the oil pressure to dissipate gradually. Do not allow oil to squirt or spray.

6 Support the axle extension cylinder with a lifting device.

7 Remove the external snap ring from the rod end of the axle extension cylinder pin. Use a soft metal drift to remove the pin.

8 Carefully remove the cylinder from the machine.

⚠WARNING Crushing hazard. The axle extension cylinder may become unbalanced and fall if it is not properly supported when it is removed from the axle.

Non-steer end:

1 Remove the drice chassis cover.

2 Remove the drive motor access covers from both sides of the axle.

3 Support the axle extension cylinder with a lifting device.

4 Remove the pin retaining fasteners from the axle extension cylinder pivot pins. Use a soft metal drift to remove the pins.

5 Start the engine and retract the axle extension cylinder.

6 Tag, disconnect and plug the axle extension cylinder hydraulic hoses at the control valve. Cap the fittings on the control valve.

⚠WARNING Bodily injury hazard. Spraying hydraulic oil can penetrate and burn skin. Loosen hydraulic connections very slowly to allow the oil pressure to dissipate gradually. Do not allow oil to squirt or spray.

7 Remove the cylinder from the machine.

⚠WARNING Crushing hazard. The axle extension cylinder may become unbalanced and fall if it is not properly supported when it is removed from the axle.

https://truckmanualshub.com/

EXTENDABLE AXLE COMPONENTS

16-2 Drive Chassis Lift Jacks

The drive chassis lift jacks are used to lift the drive chassis for axle extension. The lift jacks should not be used to support the machine during maintenance or repair procedures.

How to Remove a Chassis Lift Jack

1 Remove the drive chassis cover.

2 Tag, disconnect and plug the chassis lift jack hydraulic hoses. Cap the fittings on the cylinder.

⚠WARNING Bodily injury hazard. Spraying hydraulic oil can penetrate and burn skin. Loosen hydraulic connections very slowly to allow the oil pressure to dissipate gradually. Do not allow oil to squirt or spray.

3 Attach a lifting strap from an overhead crane to the cylinder.

4 Remove the chassis lift jack mounting fasteners, then remove the lift jack cylinder from the machine.

⚠WARNING Crushing hazard. The chassis lift jack cylinder may become unbalanced and fall if it is not properly attached to the overhead crane when it is removed from the machine.

16-3 Hydraulic Limit Switches

The hydraulic limit switches are 2 position, 2 way valves. These switches sense full axle extension, then allow the boom functions to operate.

How to Set Up the Hydraulic Limit Switch Linkage

NOTICE Adjustment of the hydraulic limit switch linkage is only necessary when the switch or linkage has been replaced or the axle wear pads are worn or have been replaced.

1 Install the hydraulic switch and connect the hydraulic hoses.

2 Install the linkage rod and leave the lock nut loose.

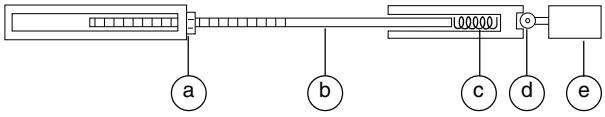

a locknut
b linkage rod
c spring
d valve actuator
e limit switch valve

3 Use the drive chassis lift jack to raise the machine.

4 Extend the axles completely, then lower the machine.

https://truckmanualshub.com/

5 Turn the linkage rod clockwise until it completely compresses the valve actuator.

6 Raise the machine.

7 Extend and retract both axles through 2 cycles and check boom functions.

⊙ Result: If the boom will not raise past the drive limit switch with both axles extended, readjust the hydraulic limit switches as necessary.

8 Perform procedure A-10, *Test the Extendable Axles*.

https://truckmanualshub.com/

Non-steering Axle Components

REV B

17-1
Drive Motor

How to Remove a Drive Motor

CAUTION Component damage hazard. Repairs to the motor should only be performed by an authorized Sundstrand-Sauer dealer.

CAUTION Component damage hazard. The work area and surfaces where this procedure will be performed must be clean and free of debris that could get into the hydraulic system and cause severe component damage. Dealer service is recommended.

NOTICE When removing a hose assembly or fitting, the O-ring on the fitting and/or hose end must be replaced and then torqued to specification during installation.
Refer to Section Two, *Hydraulic Hose and Fitting Torque Specifications.*

1 Remove the fasteners from drive chassis cover at the non-steer end. Remove the cover.

2 Extend the axle.

3 Remove the drive motor access covers from both sides of the inner axle.

4 Tag, disconnect and plug the hydraulic hoses from the drive motor. Cap the fittings on the drive motor.

⚠WARNING Bodily injury hazard. Spraying hydraulic oil can penetrate and burn skin. Loosen hydraulic connections very slowly to allow the oil pressure to dissipate gradually. Do not allow oil to squirt or spray.

5 Remove the drive motor mounting fasteners.

6 Slide the drive motor shaft out of the brake or drive hub, and remove the drive motor from the machine.

Torque specifications	
Drive motor mounting bolts, dry	110 ft-lbs 149 Nm
Drive motor mounting bolts, lubricated	80 ft-lbs 108 Nm

https://truckmanualshub.com/

17-2
Drive Hub

How to Remove a Drive Hub

NOTICE When removing a hose assembly or fitting, the O-ring on the fitting and/or hose end must be replaced and then torqued to specification during installation.
Refer to Section Two, *Hydraulic Hose and Fitting Torque Specifications.*

1 Remove the drive motor. See 17-1, *How to Remove a Drive Motor*.

2 Loosen the wheel lug nuts. Do not remove them.

3 Center a lifting jack of ample capacity under the non-steering axle. Raise the machine and place blocks under the drive chassis for support.

4 Remove the wheel lug nuts, then the tire and wheel assembly.

5 Place a second lifting jack under the drive hub for support and secure the drive hub to the lifting jack.

6 Remove the drive hub mounting bolts that attach the drive hub to the axle. Remove the drive hub.

⚠WARNING Crushing hazard. The drive hub may become unbalanced and fall if it is not properly supported and secured to the lifting jack.

Torque specifications	
Lug nut, dry	420 ft-lbs 569.5 Nm
Lug nut torque, lubricated	320 ft-lbs 434 Nm
Drive hub mounting bolts, dry	247 ft-lbs 335 Nm
Drive hub mounting bolts, lubricated	185 ft-lbs 251 Nm
Drive motor mounting bolts, dry	110 ft-lbs 149 Nm
Drive motor mounting bolts, lubricated	80 ft-lbs 108 Nm

https://truckmanualshub.com/

NON-STEERING AXLE COMPONENTS

17-3
Wheel Brake

How to Remove a Wheel Brake

NOTICE When removing a hose assembly or fitting, the O-ring on the fitting and/or hose end must be replaced and then torqued to specification during installation.
Refer to Section Two, *Hydraulic Hose and Fitting Torque Specifications.*

1 Remove the drive motor. See 17-1, *How to Remove a Drive Motor*.

2 Tag, disconnect and plug the hydraulic hose from the brake.

⚠WARNING Bodily injury hazard. Spraying hydraulic oil can penetrate and burn skin. Loosen hydraulic connections very slowly to allow the oil pressure to dissipate gradually. Do not allow oil to squirt or spray.

3 Remove the brake from the machine.

https://truckmanualshub.com/

California Proposition 65

WARNING

The exhaust from this product contains chemicals known to the State of California to cause cancer, birth defects or other reproductive harm.

Distributed By:

Genie North America
Phone 425.881.1800
Toll Free USA and Canada 800.536.1800
Fax 425.883.3475

Genie Australia Pty Ltd.
Phone +61 7 3375 1660
Fax +61 7 3375 1002

Genie China
Phone +86 21 53852570
Fax +86 21 53852569

Genie Malaysia
Phone +65 98 480 775
Fax +65 67 533 544

Genie Japan
Phone +81 3 3453 6082
Fax +81 3 3453 6083

Genie Korea
Phone +82 25 587 267
Fax +82 25 583 910

Genie Brasil
Phone +55 11 41 665 755
Fax +55 11 41 665 754

Genie Holland
Phone +31 183 581 102
Fax +31 183 581 566

Genie Scandinavia
Phone +46 31 575100
Fax +46 31 579020

Genie France
Phone +33 (0)2 37 26 09 99
Fax +33 (0)2 37 26 09 98

Genie Iberica
Phone +34 93 579 5042
Fax +34 93 579 5059

Genie Germany
Phone 0800 180 9017
Phone +49 422 149 1818
Fax +49 422 149 1820

Genie U.K.
Phone +44 (0)1476 584333
Fax +44 (0)1476 584334

Genie Mexico City
Phone +52 55 5666 5242
Fax +52 55 5666 3241