https://truckmanualshub.com/

MINI EXCAVATORS

Concrete solutions. Always.

ES 28.2 ZT Operating weight 2.700 - 2.850 kg
Engine Power 24,9 kW - 33,4 HP

ES 35.2 ZT Operating weight 3.350 - 3.500 kg
Engine Power 24,9 kW - 33,4 HP

ES 40.2 ZT Operating weight 3.800 - 3.950 kg
Engine Power 28,3 kW - 38,0 HP

EUROCOMACH®

https://truckmanualshub.com/

All three models are equipped with a side heat engine: this allows the size of the cab to be increased.
The blower fan improves engine cooling, making the cabin cooler and quieter for greater operator comfort.

https://truckmanualshub.com/

LIKE THE GREATEST, JUST SMALLER.

DIMENSIONS

With zero tail swing, you get optimal performance in confined spaces working in complete safety, focusing solely on the excavation operation, even with the cab door open, as it remains within the profile of the tracks.

All models can be equipped with four upright roll-bar protection or cab. The choice allows unmatched versatility: minimum footprint for maximum performance.

ZERO TAIL

https://truckmanualshub.com/

The ergonomic driver seat includes servo assisted controls, wrist rests and motion levers with closing pedals.

The foot rest pedals give the operator greater stability during the different work stages, especially when working on slopes.

https://truckmanualshub.com/

COMFORT, SAFETY AND FUNCTIONALITY. FINALLY TOGETHER

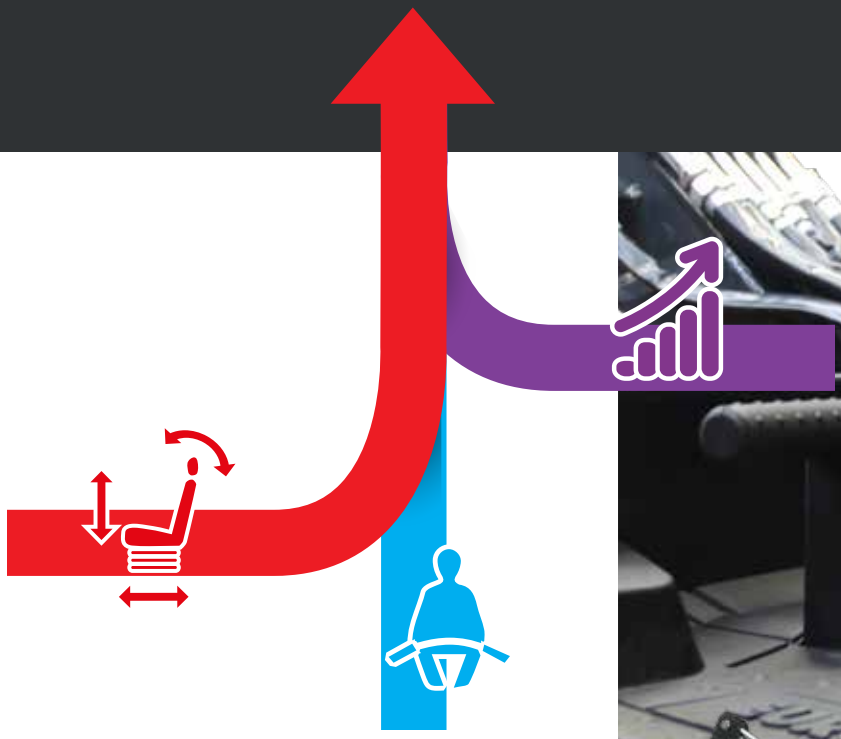

COMMANDS AND CONTROLS

Both models have two motion modes: first gear with reduced speed and high thrust force and second speed with greater transfer speed. Everything is controlled by a practical button above the backfill blade lever.
Motion can be controlled using the advancement lever and integrated folding pedals that, once closed, increase the space available to the operator and prevent accidental use.

The foot board flush with the door makes for stepless exit from the cab and facilitates floor cleaning operations. It was designed to be able to be removed easily to carry out any inspections or checks.

STRAIGHT TRAVEL

In case of simultaneous control of the services and motion, the hydraulic system with variable displacement pumps simultaneously ensures the fluidity of movements and straight driving of the machine.

AUTO TWO SPEED

When the excavator needs more thrust force, the automatic speed transmission intervenes, reducing the motion ratio.

https://truckmanualshub.com/

EVERY CONTROL IS IN YOUR HANDS.

The cabin, with its generous interior dimensions, offers some of the best interior space in its class.
The large width of the access door makes it easy to climb in and out.

The front windshield with assisted lift promotes maximum visibility due to its considerable width.
The adjustable suspension seat combined with the floating cabin, adequately dampens vibrations and bumps, maximizing operator comfort.

The cab version is also equipped with a glove compartment, a battery charger and a predisposition for the autoradio.

For quick and easy machine operation, the tilting controls and auxiliary hydraulic system are located on the joysticks. In addition to them, on the right joystick, there is an additional roller with electrical hookup for a second auxiliary hydraulic system.

https://truckmanualshub.com/

The special design of the body and protective structures give the operator a wide field of vision, allowing easy control of the front tracked part.

The large windshield along with the upper rear window lets the operator keep an eye on the entire work area while remaining comfortably seated.

WORK LIGHTS

A powerful light built into the arm optimizes visibility even with low lighting.

https://truckmanualshub.com/

LOAD SENSING HYDRAULIC SYSTEM.

The efficient Load Sensing system saves fuel (up to 15%) with the suitable power distribution.

With the LS control, the pump only delivers the flow required by the system.

FLOW SHARING distributor: full simultaneous movements (all), even when the flow required exceeds the maximum pump capacity.

Optimal flow in each element thanks to the pressure compensators in each section.

High flexibility: the flow and pressure regulators provide high-speed during empty movements and high pressure while working.

https://truckmanualshub.com/

FLEXIBILITY, COMPACTNESS, ERGONOMICS.

The practical additional external ballast (optional) can, when needed, further increase the excellent operating stability without compromising the overall size of the machine.

EFFICIENCY AND CONSUMPTION

The heart of the excavators are the efficient KUBOTA D1503–M and D1803–M engines designed and built to optimize performance and reduce fuel consumption. The long intervals between programmed maintenance contribute to economic efficiency, reducing costs and machine downtime.

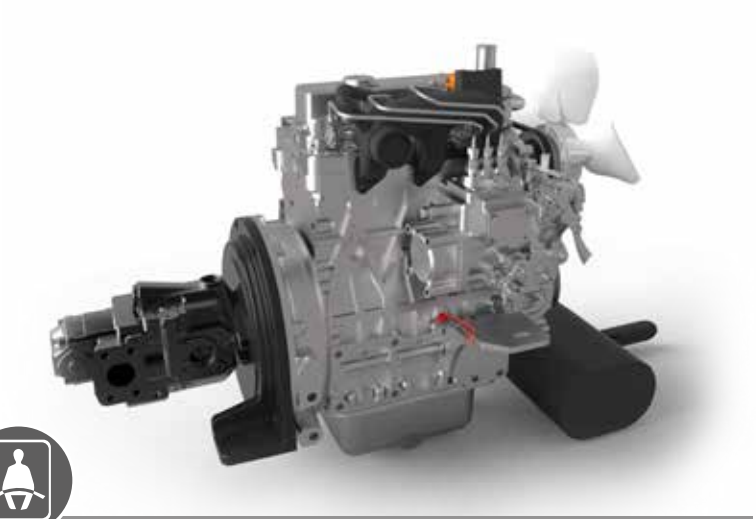

SAFETY

Machine safety means operator peace of mind. Sensors monitoring the manipulator position prevent accidental control of the machine. The excavator startup system does not allow ignition when control of the commands is active. Safety belts, the cabin structure and rollbar with FOPS level I and TOPS certificate provide all of the safety needed in the cab in the event of an accident.

OPTIONAL COUNTERWEIGHT

https://truckmanualshub.com/

The front part of the turret does not overhang the tracks. Wall digging operations are extremely easy.

https://truckmanualshub.com/

MAINTENANCE HAS NEVER BEEN SO EASY.

Quick and easy tipping of the cab gives easy access to the distributor and the main components of the hydraulic system: just a few gestures for major added value.

ACCESSIBILITY

https://truckmanualshub.com/

Easy routine maintenance simplifies service operations.
The rear bonnet allows quick cleaning of the radiator and access to the oil and fuel tank.

Services related to the heat engine are easily reached through a wide opening and the side compartment.
All the filters (fuel, oil and air) in addition to checking and topping up the engine oil, are easily identified on the side.

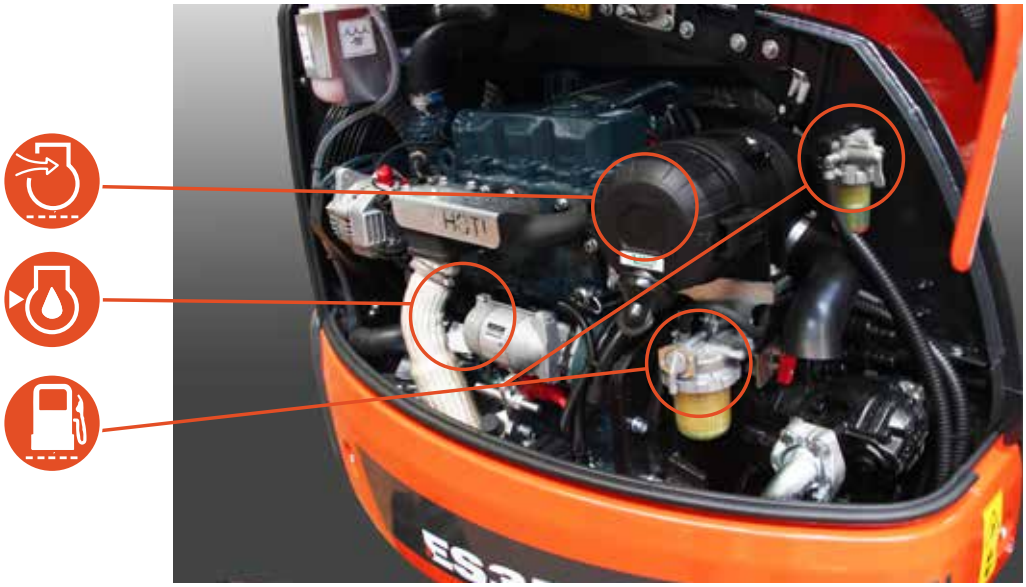

All access points for daily checks and for routine maintenance are concentrated in defined areas, optimizing machine downtime.

ACCESSIBILITY

Common or dedicated access areas make every maintenance operation quick and easy.

https://truckmanualshub.com/

SPACE FOR SERVICES.

https://truckmanualshub.com/

THE IMPORTANCE OF BEING RELIABLE.

RELIABILITY

Designed and tested for high performance with continuous reliability.
The definition of the materials, the selection of components and design of the structures were created to exceed the most stressful and harsh work tests.
Standing out among these are the rotation column in fusion, the protections on the lifting cylinder and the steel blade and bonnets that increase efficiency and life of the product.

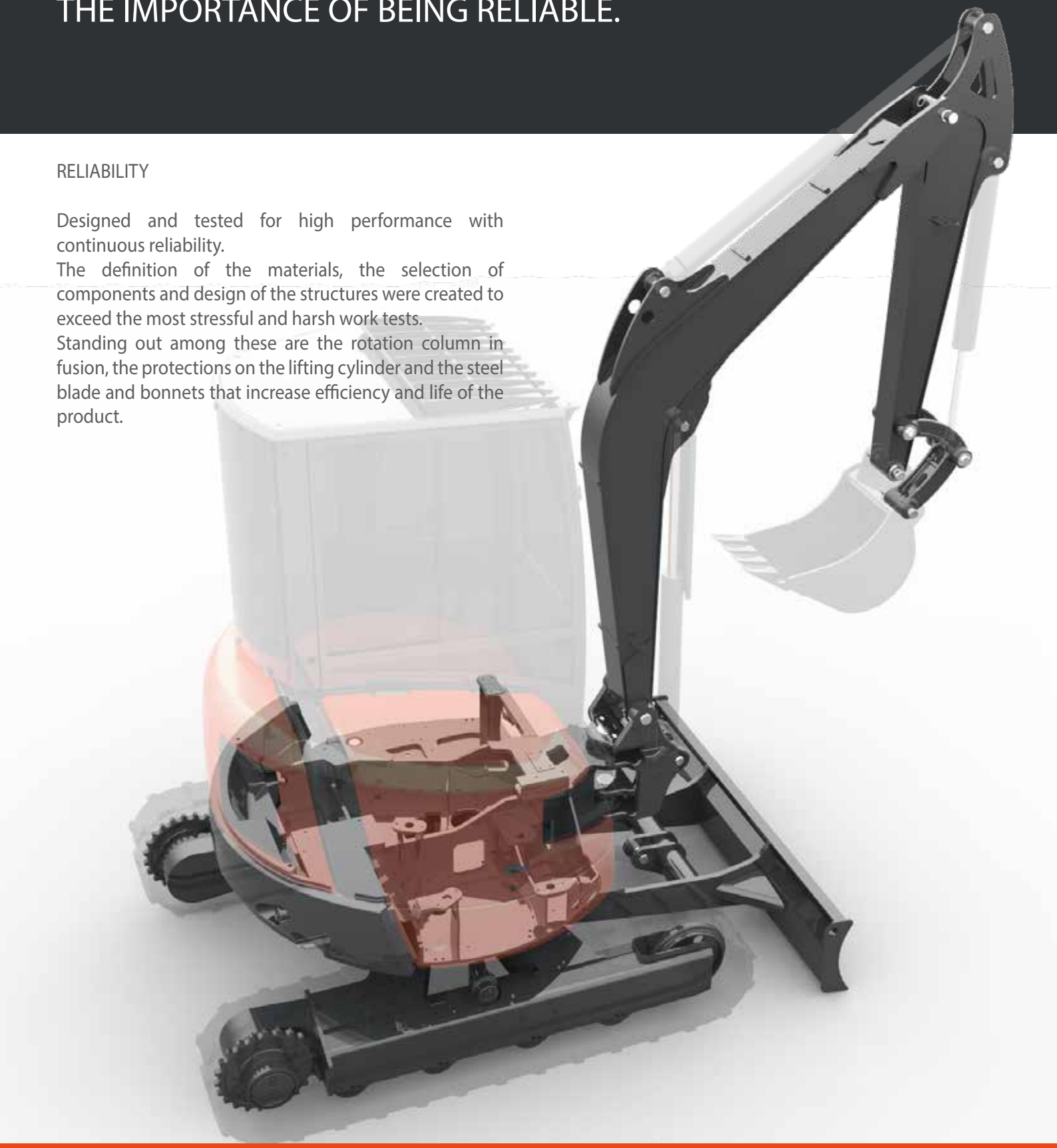

PERFORMANCE

https://truckmanualshub.com/

ECS: ONE CONCEPT, NUMEROUS POSSIBILITIES.

UTILITIES AND SERVICES

We listen to all your needs so we can propose the best possible machine solution.

We consider our products to be not only simple machines but the best opportunity for our clients.

Among the services provided, the following are available:

Customized paint
Various types of tracks
Auxiliary line hookups customized by type and quantity
Additional equipment

The many configurations available allow you to make the best choice in relation to the work to be performed.

https://truckmanualshub.com/

OPTIONALS.

The wide range of equipment especially designed for Eurocomach mini excavators ensures the most appropriate use of the machine, maximizing performance.

A complete offer of optional fittings ensures the best performance.

Certified and tested lifting hook and blocking valves with CE certification for material handling equipment

Additional front and rear protective grills with FOPS level II certification

Single/double effect hydraulic system with electrical containment (50 lt/min)

Automatic centralized lubrication

Electronically controlled diesel filler pump

https://truckmanualshub.com/

Electro-hydraulic proportional potentiometer to act the hydraulic systems on both Joysticks

Customized paint

EUROCOMACH GEOSERVICE

– Precise location of the machine on the Internet

– Antitheft device with alarm and notification via SMS/email

– High water temperature or low engine oil pressure alarm with notification via SMS/email

– Use time monitoring with alarm for service due

https://truckmanualshub.com/

	ES 28.2 ZT	ES 35.2 ZT	ES 40.2 ZT
ENGINE			
Diesel engine, 3 cylinders, displacement 1499 cc, watercooled	●	●	/
Diesel engine, 3 cylinders, displacement 1826 cc, watercooled	/	/	●
Electronic throttle with automatic idle speed system (Auto Idle)	○	○	○
Electric preheater	●	●	●
Dry air filter with discharge valve and filter clogged indicator	●	●	●
Double cartridge air filter	●	●	●
Cartridge engine oil filter	●	●	●
Cartridge fuel filter	●	●	●
Fuel filter with transparent water separation container	●	●	●
Fuel tank discharge	●	●	●
Auxiliary liquid refrigerant expansion tank	●	●	●
CAB			
Cab ROPS - TOPS - FOPS (Level I)	●	●	●
Adjustable mechanical suspension seat	●	●	●
Adjustable pneumatic suspension seat	○	○	○
Safety Belt	●	●	●
Wrist supports	●	●	●
Foot supports	●	●	●
Closable motion petals	●	●	●
Comfort rubber foot rest	●	●	●
Drivers seat platform assembled on 4 vibration damping elastic supports	●	●	●
Heating system with speed adjustment	●	●	●
Air-conditioning with manual adjustment	○	○	○
Sliding right side window	●	●	●
Sliding left side window	●	●	●
Windshield with assisted opening system (gas springs)	●	●	●
Rolling sun blind	●	●	●
Courtesy light	●	●	●
Indicator light for hydraulic filter and engine air intake filter clog	●	●	●
Water temperature and fuel level indicators	●	●	●
Hour counter	●	●	●
High water temperature alarm	●	●	●
Warning buzzer	●	●	●
Radio AM/FM USB	○	○	○
Single pole 12 volt power supply outlet	●	●	●
Front windshield wipers with sprayer and speed control	●	●	●
Glove compartment	●	●	●
Bottle holder	●	●	●

	ES 28.2 ZT	ES 35.2 ZT	ES 40.2 ZT
CANOPY			
4 upright rollbar ROPS - TOPS - FOPS (Level I)	○	○	○
Adjustable mechanical suspension seat	●	●	●
Adjustable pneumatic suspension seat	○	○	○
Safety Belt	●	●	●
Wrist supports	●	●	●
Foot supports	●	●	●
Closable motion petals	●	●	●
Comfort rubber foot rest	●	●	●
Drivers seat platform assembled on 4 vibration damping elastic supports	●	●	●
Indicator light for hydraulic filter and engine air intake filter clog	●	●	●
Water temperature and fuel level indicators	●	●	●
Hour counter	●	●	●
High water temperature alarm	●	●	●
Warning buzzer	●	●	●
Single pole 12 volt power supply outlet	●	●	●
Glove compartment	●	●	●
SAFETY			
Machine blocking device during exit/ access to the driver's seat	●	●	●
Engine ignition device only with the left console lowered	●	●	●
Anti-slip climbing plate	●	●	●
Climbing and descending handles	●	●	●
Emergency bar	●	●	●
Rearview mirror kit	●	●	●
Rearview camera kit with dedicated colour monitor	○	○	○
Anti-drift safety valve on the first arm, second arm and backfill blade	○	○	○
Pressure accumulator that allows the arm to be lowered in the event of an engine failure	●	●	●
HYDRAULIC SYSTEM			
Load-sensing hydraulic system with variable capacity pump	●	●	●
ISO hydraulic servo-control	●	●	●
Hydraulic oil intake filter	●	●	●
Rotation parking brake	●	●	●
Motion parking brake	●	●	●
Two speed motion system	●	●	●
Automatic movement speed change (Shift-down)	●	●	●
Single/double effect hydraulic system (e.g., hammer or drill) with electrical containment	●	●	●
Hydraulic setup for calliper rotor (with switches on bucket cylinder)	○	○	○
AUX 2: System setup for calliper rotor with proportional electro-hydraulic control on the Right joystick	○	○	○

	ES 28.2 ZT	ES 35.2 ZT	ES 40.2 ZT
ELECTRICAL SYSTEM			
Work lights on the lifting arm	●	●	●
Supplementary work lights on the lifting arm	○	○	○
Supplementary front canopy/cap lights	○	○	○
Supplementary rear canopy/cap lights	○	○	○
Rotating light	○	○	○
Battery disconnect switch	●	●	●
Watertight connectors (IP67)	●	●	●
UNDERCARRIAGE			
Backfill blade	●	●	●
Dozer blade cylinder protective casing	●	●	●
Motion engines casing	●	●	●
Rotating joint protective casing	●	●	●
Rubber tracks	●	●	●
Iron tracks	○	○	○
Rubber road pad for iron tracks	○	○	○
4 anchoring points for transport	●	●	●
UTILITY			
Antitheft system	○	○	○
Geo-service system for locating and remote diagnostics	○	○	○
Second excavating arm 1100 mm	●	/	/
Second excavating arm 1,310 mm	○	/	/
Second excavating arm 1,200 mm	/	●	/
Second excavating arm 1,400 mm	/	○	●
Second excavating arm 1,650 mm	/	/	○
Additional external counterweight	○	○	○
Platform roll bar / tippable cab	●	●	●
Colour customizations (RAL specific)	○	○	○
4 anchoring points for lifting	●	●	●
On-board visual fuel level indicator	●	●	●
Fuel refill pump with automatic shutdown	○	○	○
Lifting cylinder protective casing	●	●	●

STANDARD EQUIPMENT	●
OPTIONAL EQUIPMENT	○
NOT AVAILABLE	/

TECHNICALS SPECIFICATIONS

https://truckmanualshub.com/

Operating weight with canopy (with rubber tracks)		kg	2.700
Operating weight with cabin (with rubber tracks)		kg	2.850
Travelling speed (AUTO TWO SPEED)		km/h	1ª: 0 ÷ 2,5 / 2ª: 0 ÷ 4,6
Slew speed		rpm	10
ENGINE			
Type		KUBOTA D1503-M EU Stage 3A	
Max Power (2.200 rpm)		kW - HP	24,9 - 33,4
Displacement		cc	1.499
Number of cylinders		n°	3
Cooling		water	
Consumption		lt/h	4,6
Alternator		V (A)	12 (40)
Battery		V (Ah)	12 (80)
HYDRAULIC SYSTEM			
Circuit Type		load sensing closed center system with flow sharing control valve	
Pump type		1 ls variable pump + 1 gear pump	
Pump displacement		cc	48 + 5
Pump capacity		lt/min	105 + 10
Max. circuit calibration pressure		bar	250
Auxiliary system:	Max capacity	lt/min	50
	Max pressure	bar	200
PERFORMANCES			
Max digging depth standard arm (optional arm)		mm	2.570 (2.770)
Max dumping height with cab standard arm (optional arm)		mm	3.040 (3.165)
Bucket breaking force (standard arm) ISO 6015		daN	2.400
Arm breaking force (standard arm) ISO 6015		daN	1.950
Traction force		daN	3.400
Ground bearing pressure with rubber tracks and canopy (with cabin)		kg/cm²	0,29 (0,31)
Max slope		60% - 30°	
DIMENSIONS			
Maximum width		mm	1.550
Total height		mm	2.530
Rear rotation radius		mm	772
Digging arm length std (optional)		mm	1.110 (1.310)
Tracks width		mm	280
Rollers number (for each side)		n°	4/1
FILLINGS			
Fuel tank		lt	46
Hydraulic oil tank		lt	30
Hydraulic circuit capacity		lt	54
Cooling system capacity		lt	7,5
Engine oil		lt	7
CONTROLS			
Boom, dipper stick, bucket and turret swing		2 pilot joysticks	
Track movements (included counter rotation)		2 pilot levers	
Dozer blade		pilot lever	
Auxiliary circuit (simple or double effect)		electroproportional switch on right joystick	
Boom swing		electroproportional switch on left joystick	

TECHNICALS SPECIFICATIONS

https://truckmanualshub.com/

Operating weight with canopy (with rubber tracks)		kg	3.350
Operating weight with cabin (with rubber tracks)		kg	3.500
Travelling speed (AUTO TWO SPEED)		km/h	1ª: 0 ÷ 2,5 / 2ª: 0 ÷ 4,6
Slew speed		rpm	10
ENGINE			
Type		KUBOTA D1503-M EU Stage 3A	
Max Power (2.200 rpm)		kW - HP	24,9 - 33,4
Displacement		cc	1.499
Number of cylinders		n°	3
Cooling		water	
Consumption		lt/h	4,6
Alternator		V (A)	12 (40)
Battery		V (Ah)	12 (80)
HYDRAULIC SYSTEM			
Circuit Type		load sensing closed center system with flow sharing control valve	
Pump type		1 ls variable pump + 1 gear pump	
Pump displacement		cc	48 + 5
Pump capacity		lt/min	105 + 10
Max. circuit calibration pressure		bar	250
Auxiliary system:	Max capacity	lt/min	50
	Max pressure	bar	200
PERFORMANCES			
Max digging depth standard arm (optional arm)		mm	2.880 (3.080)
Max dumping height with cab standard arm (optional arm)		mm	3.110 (3.240)
Bucket breaking force (standard arm) ISO 6015		daN	2.400
Arm breaking force (standard arm) ISO 6015		daN	1.950
Traction force		daN	3.400
Ground bearing pressure with rubber tracks and canopy (with cabin)		kg/cm^2	0,33 (0,34)
Max slope		60% - 30°	
DIMENSIONS			
Maximum width		mm	1.580
Total height		mm	2.530
Rear rotation radius		mm	788
Digging arm length std (optional)		mm	1.200 (1.400)
Tracks width		mm	300
Rollers number (for each side)		n°	4/1
FILLINGS			
Fuel tank		lt	46
Hydraulic oil tank		lt	30
Hydraulic circuit capacity		lt	54
Cooling system capacity		lt	7,5
Engine oil		lt	7
CONTROLS			
Boom, dipper stick, bucket and turret swing		2 pilot joysticks	
Track movements (included counter rotation)		2 pilot levers	
Dozer blade		pilot lever	
Auxiliary circuit (simple or double effect)		electroproportional switch on right joystick	
Boom swing		electroproportional switch on left joystick	

TECHNICALS SPECIFICATIONS

https://truckmanualshub.com/

Operating weight with canopy (with rubber tracks)		kg	3.800
Operating weight with cabin (with rubber tracks)		kg	3.950
Travelling speed (AUTO TWO SPEED)		km/h	1ª: 0 ÷ 2,5 / 2ª: 0 ÷ 4,6
Slew speed		rpm	10
ENGINE			
Type		KUBOTA D1803-M EU Stage 3A	
Max Power (2.200 rpm)		kW - HP	28,3 - 38,0
Displacement		cc	1.826
Number of cylinders		n°	3
Cooling		water	
Consumption		lt/h	5,2
Alternator		V (A)	12 (40)
Battery		V (Ah)	12 (80)
HYDRAULIC SYSTEM			
Circuit Type		load sensing closed center system with flow sharing control valve	
Pump type		1 ls variable pump + 1 gear pump	
Pump displacement		cc	48 + 5
Pump capacity		lt/min	105 + 10
Max. circuit calibration pressure		bar	250
Auxiliary system:	Max capacity	lt/min	50
	Max pressure	bar	200
PERFORMANCES			
Max digging depth standard arm (optional arm)		mm	3.200 (3.450)
Max dumping height with cab standard arm (optional arm)		mm	3.530 (3.680)
Bucket breaking force (standard arm) ISO 6015		daN	3.200
Arm breaking force (standard arm) ISO 6015		daN	1.950
Traction force		daN	3.400
Ground bearing pressure with rubber tracks and canopy (with cabin)		kg/cm²	0,32 (0,33)
Max slope		60% - 30°	
DIMENSIONS			
Maximum width		mm	1.700
Total height		mm	2.535
Rear rotation radius		mm	845
Digging arm length std (optional)		mm	1.400 (1.650)
Tracks width		mm	350
Rollers number (for each side)		n°	4/1
FILLINGS			
Fuel tank		lt	46
Hydraulic oil tank		lt	30
Hydraulic circuit capacity		lt	54
Cooling system capacity		lt	8
Engine oil		lt	7
CONTROLS			
Boom, dipper stick, bucket and turret swing		2 pilot joysticks	
Track movements (included counter rotation)		2 pilot levers	
Dozer blade		pilot lever	
Auxiliary circuit (simple or double effect)		electroproportional switch on right joystick	
Boom swing		electroproportional switch on left joystick	

https://truckmanualshub.com/

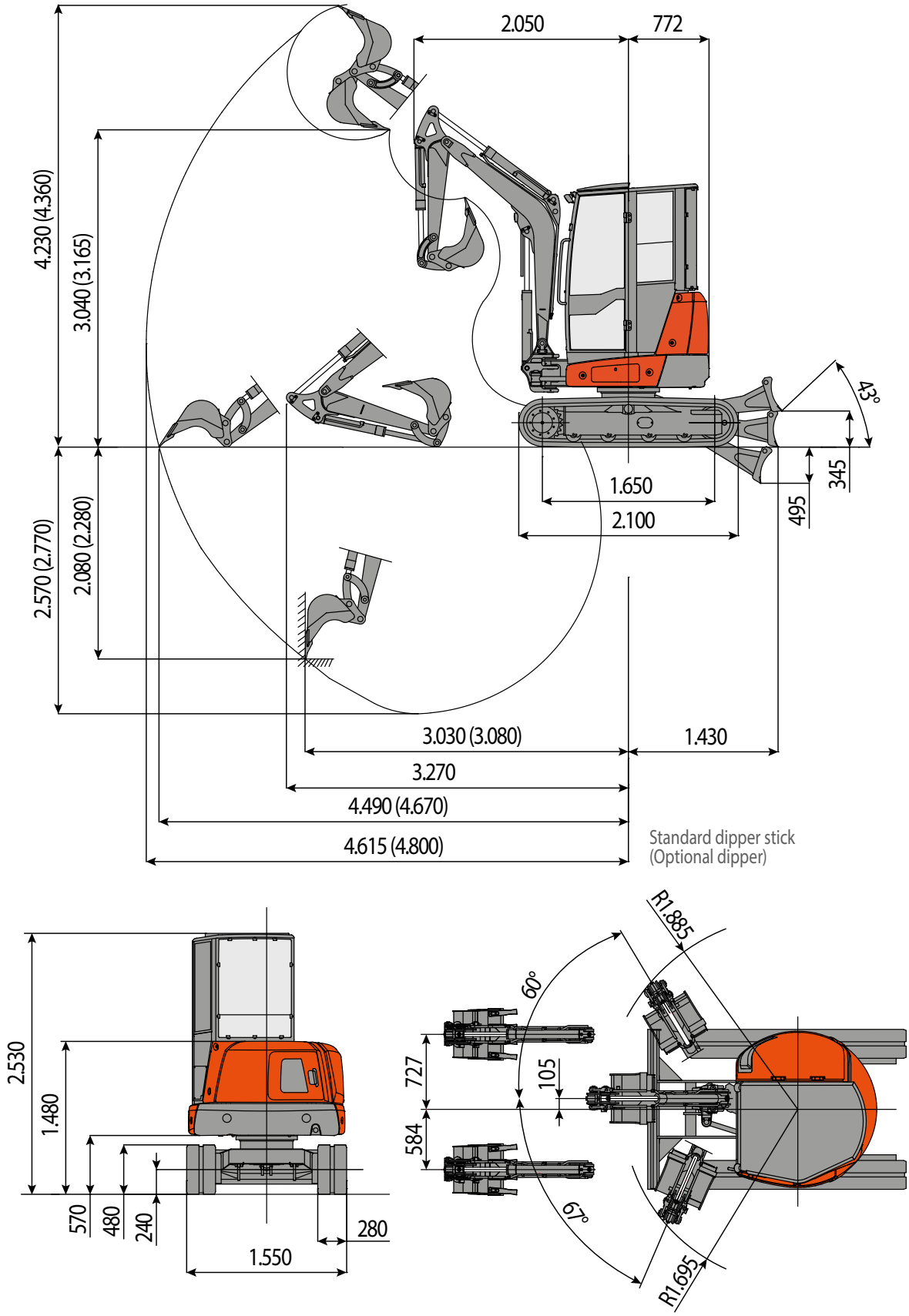

https://truckmanualshub.com/

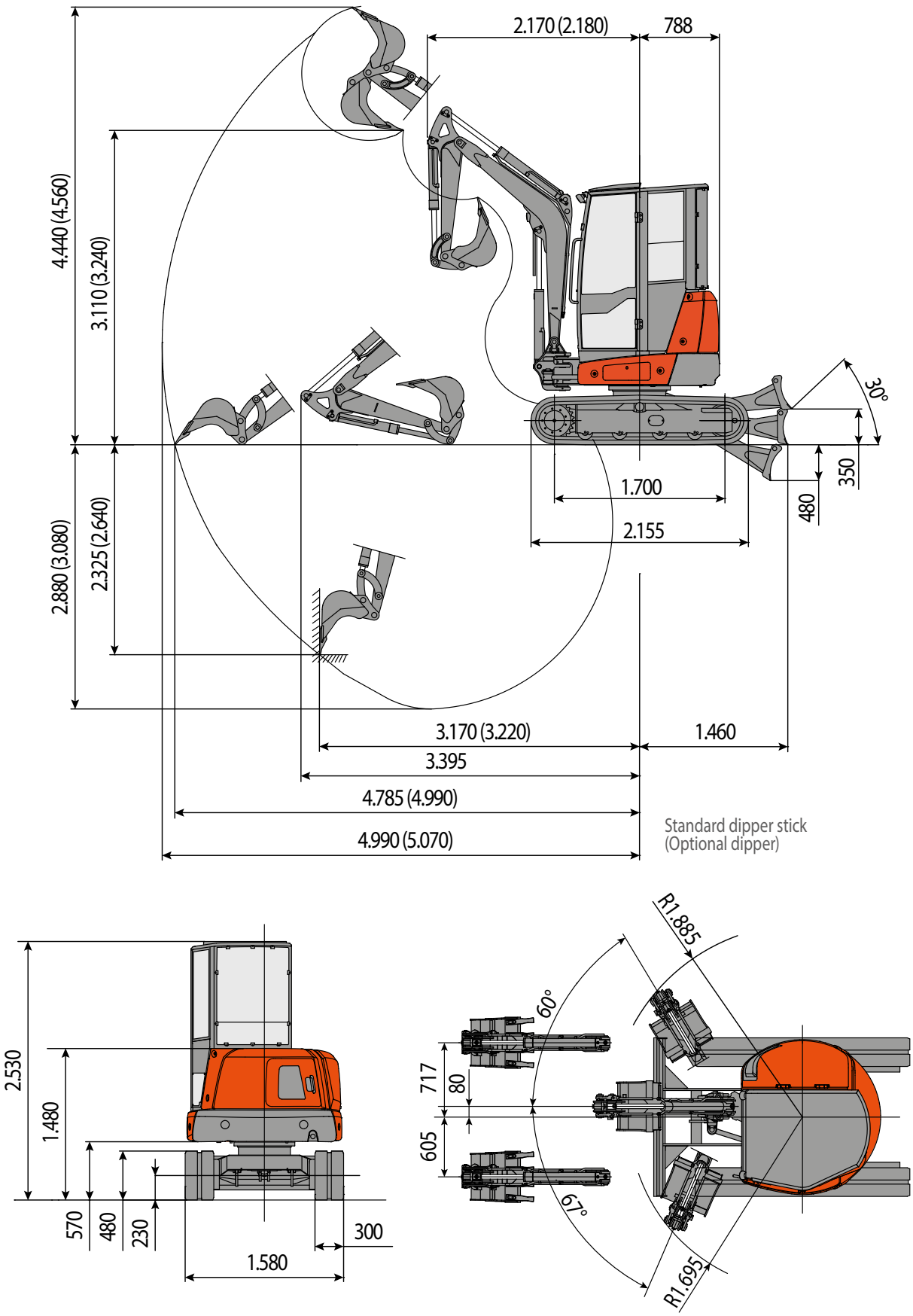

ES 35.2 ZT

https://truckmanualshub.com/

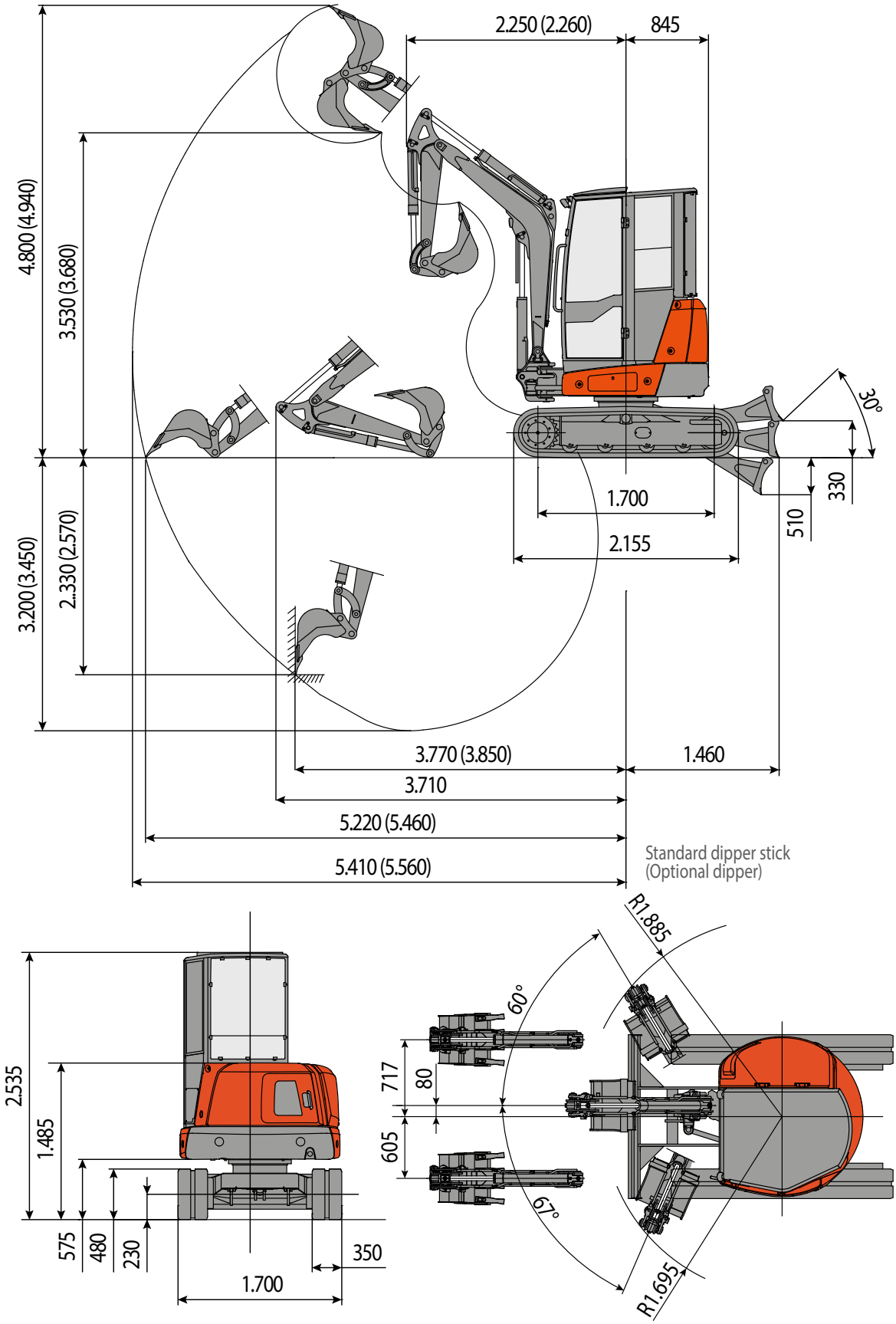

LIFTING CAPACITY

https://truckmanualshub.com/

The lifting capacity is based on ISO 10567 and does not exceed 75% of the static tipping load or 87% of the hydraulic lifting capacity of the machine.

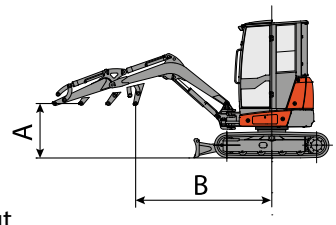

The straddle refers to the centre of rotation.
* Indicates the hydraulic load limit.
0 m refers to ground level.
The machine is understood to be equipped with a cab, rubber tracks, without a bucket and without a quick coupling.

Front Side Unit: ton

Raised Blade, Standard Arm (1110 mm)
( ) the values in parenthesis are with additional ballast: 0.16 ton

A (m)	B (m)								
	1.0		2.0		3.0		MAX		
	Front	Side	Front	Side	Front	Side	Front	Side	MAX
3.0					0,52 (0,6)	0,41 (0,49)	0,31 (0,38)	0,28 (0,35)	3,27 m
2.0 m					0,56 (0,64)	0,43 (0,51)	0,34 (0,4)	0,31 (0,37)	3,82 m
1.0 m					0,58 (0,66)	0,47 (0,55)	0,36 (0,41)	0,33 (0,38)	3,99 m
0 m			*1,12 (*1,12)	0,73 (0,87)	0,6 (0,68)	0,43 (0,51)	0,36 (0,42)	0,33 (0,39)	3,83 m
-1.0 m	*1,78 (*1,78)	*1,34 (*1,34)	*1,14 (*1,14)	0,81 (0,95)	0,61 (0,69)	0,41 (0,49)	0,37 (0,44)	0,33 (0,4)	3,28 m

Lowered Blade, Standard Arm (1110 mm)
( ) the values in parenthesis are with additional ballast: 0.16 ton

A (m)	B (m)								
	1.0		2.0		3.0		MAX		
	Front	Side	Front	Side	Front	Side	Front	Side	MAX
3.0 m					*0,76 (*0,76)	0,41 (0,49)	*0,6 (*0,6)	0,28 (0,35)	3,27 m
2.0 m					*0,79 (*0,79)	0,43 (0,49)	*0,61 (*0,61)	0,31 (0,37)	3,82 m
1.0 m					*0,81 (*0,81)	0,47 (0,51)	*0,74 (*0,74)	0,33 (0,38)	3,99 m
0 m			*1,12 (*1,12)	0,73 (0,87)	*0,8 (*0,8)	0,43 (0,55)	*0,73 (*0,73)	0,33 (0,39)	3,83 m
-1.0 m	*1,78 (*1,78)	*1,34 (*1,34)	*1,14 (*1,14)	0,81 (0,95)	*0,76 (*0,76)	0,41 (0,51)	*0,76 (*0,76)	0,33 (0,4)	3,28 m

Raised Blade, Optional Arm (1310 mm)
( ) the values in parenthesis are with additional ballast: 0.16 ton

A (m)	B (m)								
	1.0		2.0		3.0		MAX		
	Front	Side	Front	Side	Front	Side	Front	Side	MAX
3.0 m					0,51 (0,59)	0,4 (0,48)	0,25 (0,32)	0,22 (0,29)	3,52 m
2.0 m					0,55 (0,63)	0,42 (0,5)	0,28 (0,34)	0,25 (0,31)	4,03 m
1.0 m					0,57 (0,65)	0,46 (0,54)	0,29 (0,35)	0,26 (0,32)	4,19 m
0 m			*1,11 (*1,11)	0,72 (0,86)	0,59 (0,67)	0,42 (0,5)	0,3 (0,36)	0,27 (0,33)	4,04 m
-1.0 m	*1,77 (*1,77)	*1,33 (*1,33)	*1,13 (*1,13)	0,79 (0,94)	0,6 (0,68)	0,4 (0,48)	0,31 (0,38)	0,27 (0,34)	3,53 m

Lowered Blade, Optional Arm (1310 mm)
( ) the values in parenthesis are with additional ballast: 0.16 ton

A (m)	B (m)								
	1.0		2.0		3.0		MAX		
	Front	Side	Front	Side	Front	Side	Front	Side	MAX
3.0 m					*0,75 (*0,75)	0,4 (*0,48)	*0,53 (*0,53)	0,22 (0,29)	3,52 m
2.0 m					*0,78 (*0,78)	0,42 (*0,48)	*0,55 (*0,55)	0,25 (0,31)	4,03 m
1.0 m					*0,8 (*0,8)	0,46 (0,5)	*0,68 (*0,68)	0,26 (0,32)	4,19 m
0 m			*1,11 (*1,11)	0,72 (0,86)	*0,78 (*0,78)	0,42 (0,54)	*0,67 (*0,67)	0,27 (0,33)	4,04 m
-1.0 m	*1,77 (*1,77)	*1,33 (*1,33)	*1,13 (*1,13)	0,79 (0,94)	*0,75 (*0,75)	0,4 (0,5)	*0,7 (*0,7)	0,27 (0,34)	3,53 m

LIFTING CAPACITY

https://truckmanualshub.com/

The lifting capacity is based on ISO 10567 and does not exceed 75% of the static tipping load or 87% of the hydraulic lifting capacity of the machine.

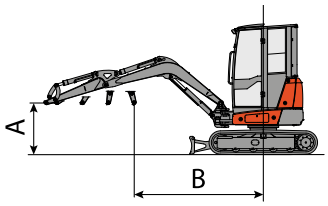

The straddle refers to the centre of rotation.
* Indicates the hydraulic load limit.
0 m refers to ground level.
The machine is understood to be equipped with a cab, rubber tracks, without a bucket and without a quick coupling.

Front Side Unit: ton

Raised Blade, Standard Arm (1200 mm)
( ) the values in parenthesis are with additional ballast: 0.205 ton

A (m)	B (m)								
	1.0		2.0		3.0		MAX		
	Front	Side	Front	Side	Front	Side	Front	Side	MAX
3.0					0,52 (0,62)	0,59 (0,69)	0,31 (0,39)	0,31 (0,39)	3,39 m
2.0					0,56 (0,66)	0,58 (0,68)	0,34 (0,41)	0,34 (0,41)	3,92 m
1.0					0,78 (0,88)	0,56 (0,66)	0,56 (0,62)	0,38 (0,44)	4,08 m
0			*1,4 (*1,4)	1,05 (1,23)	0,6 (0,71)	0,56 (0,66)	0,36 (0,43)	0,39 (0,46)	3,92 m
-1.0	*1,91 (*1,91)	*1,39 (*1,39)	*1,14 (*1,14)	0,82 (1)	0,61 (0,71)	0,57 (0,67)	0,37 (0,45)	0,39 (0,48)	3,40 m

Lowered Blade, Standard Arm (1200 mm)
( ) the values in parenthesis are with additional ballast: 0.205 ton

A (m)	B (m)								
	1.0		2.0		3.0		MAX		
	Front	Side	Front	Side	Front	Side	Front	Side	MAX
3.0					*0,78 (*0,78)	0,59 (0,69)	*0,59 (*0,59)	0,31 (0,39)	3,39 m
2.0					*0,83 (*0,83)	0,58 (0,69)	*0,6 (*0,6)	0,34 (0,41)	3,92 m
1.0					*0,91 (*0,91)	0,56 (0,68)	*0,67 (*0,67)	0,38 (0,44)	4,08 m
0			*1,4 (*1,4)	1,05 (1,23)	*0,95 (*0,95)	0,56 (0,66)	*0,73 (*0,73)	0,39 (0,46)	3,92 m
-1.0	*1,91 (*1,91)	*1,39 (*1,39)	*1,14 (*1,14)	0,82 (1)	*0,97 (*0,97)	0,57 (0,66)	*0,76 (*0,76)	0,39 (0,48)	3,40 m

Raised Blade, Optional Arm (1400 mm)
( ) the values in parenthesis are with additional ballast: 0.205 ton

A (m)	B (m)								
	1.0		2.0		3.0		MAX		
	Front	Side	Front	Side	Front	Side	Front	Side	MAX
3.0					0,51 (0,61)	0,58 (0,68)	0,24 (0,32)	0,24 (0,32)	3,64 m
2.0					0,55 (0,65)	0,57 (0,67)	0,27 (0,34)	0,27 (0,34)	4,13 m
1.0					0,76 (0,87)	0,55 (0,65)	0,49 (0,55)	0,31 (0,37)	4,28 m
0			*1,38 (*1,38)	1,03 (1,22)	0,59 (0,69)	0,55 (0,65)	0,29 (0,36)	0,32 (0,39)	4,13 m
-1.0	*1,9 (*1,9)	*1,38 (*1,38)	*1,13 (*1,13)	0,81 (0,99)	0,6 (0,7)	0,55 (0,66)	0,3 (0,38)	0,32 (0,41)	3,65 m

Lowered Blade, Optional Arm (1400 mm)
( ) the values in parenthesis are with additional ballast: 0.205 ton

A (m)	B (m)								
	1.0		2.0		3.0		MAX		
	Front	Side	Front	Side	Front	Side	Front	Side	MAX
3.0					*0,77 (*0,77)	0,58 (*0,68)	*0,52 (*0,52)	0,24 (0,32)	3,64 m
2.0					*0,82 (*0,82)	0,57 (*0,68)	*0,53 (*0,53)	0,27 (0,34)	4,13 m
1.0					*0,9 (*0,9)	0,55 (0,67)	*0,6 (*0,6)	0,31 (0,37)	4,28 m
0			*1,38 (*1,38)	1,03 (1,22)	*0,94 (*0,94)	0,55 (0,65)	*0,66 (*0,66)	0,32 (0,39)	4,13 m
-1.0	*1,9 (*1,9)	*1,38 (*1,38)	*1,13 (*1,13)	0,81 (0,99)	*0,96 (*0,96)	0,55 (0,65)	*0,69 (*0,69)	0,32 (0,41)	3,65 m

LIFTING CAPACITY

https://truckmanualshub.com/

The lifting capacity is based on ISO 10567 and does not exceed 75% of the static tipping load or 87% of the hydraulic lifting capacity of the machine.

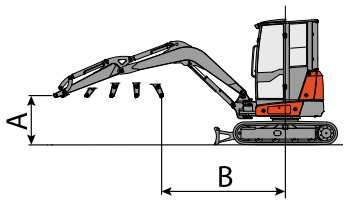

The straddle refers to the centre of rotation.
* Indicates the hydraulic load limit.
0 m refers to ground level.
The machine is understood to be equipped with a cab, rubber tracks, without a bucket and without a quick coupling.

Front Side Unit: ton

Raised Blade, Standard Arm (1400 mm)
( ) the values in parenthesis are with additional ballast: 0.255 ton

A (m)	B (m)								
	1.0		2.0		3.0		MAX		
									MAX
3.0					0,82 (0,96)	0,63 (0,76)	0,51 (0,62)	0,41 (0,52)	3,64 m
2.0					0,84 (0,97)	0,65 (0,79)	0,55 (0,64)	0,42 (0,51)	4,13 m
1.0					0,86 (1,00)	0,66 (0,8)	0,56 (0,65)	0,44 (0,53)	4,28 m
0			*1,52 (*1,52)	1,12 (1,37)	0,75 (0,88)	0,67 (0,81)	0,55 (0,64)	0,43 (0,52)	4,13 m
-1.0	*2,08 (*2,08)	*1,54 (*1,54)	*1,23 (*1,23)	0,9 (1,15)	0,73 (0,87)	0,67 (0,81)	0,54 (0,64)	0,43 (0,54)	3,64 m

Lowered Blade, Standard Arm (1400 mm)
( ) the values in parenthesis are with additional ballast: 0.255 ton

A (m)	B (m)								
	1.0		2.0		3.0		MAX		
									MAX
3.0					*0,94 (*0,94)	0,63 (0,8)	*0,69 (*0,69)	0,41 (0,52)	3,64 m
2.0					*0,96 (*0,96)	0,65 (0,76)	*0,7 (*0,7)	0,42 (0,51)	4,13 m
1.0					*0,99 (*0,99)	0,66 (0,79)	*0,72 (*0,72)	0,44 (0,53)	4,28 m
0			*1,52 (*1,52)	1,12 (1,37)	*1,02 (*1,02)	0,67 (0,8)	*0,71 (*0,71)	0,43 (0,52)	4,13 m
-1.0	*2,08 (*2,08)	*1,54 (*1,54)	*1,23 (*1,23)	0,9 (1,15)	*1 (*1)	0,67 (0,81)	*0,7 (*0,7)	0,43 (0,54)	3,64 m

Raised Blade, Optional Arm (1650 mm)
( ) the values in parenthesis are with additional ballast: 0.255 ton

A (m)	B (m)								
	1.0		2.0		3.0		MAX		
									MAX
3.0					0,8 (0,94)	0,61 (0,75)	0,44 (0,54)	0,33 (0,44)	3,94 m
2.0					0,82 (0,96)	0,63 (0,77)	0,47 (0,57)	0,34 (0,43)	4,39 m
1.0					0,84 (0,98)	0,65 (0,78)	0,48 (0,57)	0,36 (0,45)	4,53 m
0			*1,5 (*1,5)	1,1 (1,35)	0,73 (0,87)	0,65 (0,79)	0,47 (0,57)	0,35 (0,45)	4,39 m
-1.0	*2,07 (*2,07)	*1,53 (1,53)	*1,21 (*1,21)	0,88 (1,13)	0,71 (0,85)	0,65 (0,79)	0,46 (0,57)	0,35 (0,46)	3,95 m

Lowered Blade, Optional Arm (1650 mm)
( ) the values in parenthesis are with additional ballast: 0.255 ton

A (m)	B (m)								
	1.0		2.0		3.0		MAX		
									MAX
3.0					*0,93 (*0,93)	0,61 (*0,78)	*0,62 (*0,62)	0,33 (0,44)	3,94 m
2.0					*0,94 (*0,94)	0,63 (*0,75)	*0,62 (*0,62)	0,34 (0,43)	4,39 m
1.0					*0,97 (*0,97)	0,65 (0,77)	*0,64 (*0,64)	0,36 (0,45)	4,53 m
0			*1,5 (*1,5)	1,1 (1,35)	*1,01 (*1,01)	0,65 (0,78)	*0,63 (*0,63)	0,35 (0,45)	4,39 m
-1.0	*2,07 (*2,07)	*1,53 (*1,53)	*1,21 (*1,21)	0,88 (1,13)	*0,99 (*0,99)	0,65 (0,79)	*0,62 (*0,62)	0,35 (0,46)	3,95 m

https://truckmanualshub.com/

EUROCOMACH®

Sampierana S.p.A.
Via Leonardo da Vinci, 40 47021
S. Piero in Bagno (FC) - ITALY
Tel +39 0543.904211

www.eurocomach.com

COMPANY WITH
QUALITY SYSTEM
CERTIFIED BY DNV GL
= ISO 9001 =

The information contained in this brochure is of a general nature. Sampierana S.p.A. reserves the right to change the product technical data and characteristics at any time without prior notice. The photographs are for illustrative purposes only and do not necessarily refer to products in standard conditions. For instructions on the correct use of the products, please consult the use and maintenance manual. Sampierana S.p.A. shall not be liable for damages or injuries resulting from failure to follow the instructions contained in the use and maintenance manual.