https://truckmanualshub.com/

NOTICE

The information contained is for **DEALER REFERENCE PURPOSES ONLY**.
MANUALS ARE MODEL AND SERIAL NUMBER SPECIFIC.

If additional printed manuals are required for your shop/office location, order by part number through the factory's Parts Center.

If a retail customer needs replacement manual(s) for a specific unit, contact the factory's Customer Data Center at: 800-829-0051 or customerdata@vermeermfg.com

https://truckmanualshub.com/

This page intentionally left blank.

https://truckmanualshub.com/

Vermeer®

D33X44 NAVIGATOR HORIZONTAL DIRECTIONAL DRILL

Parts Manual

P2.03
SERIAL NO. 491 -
ORDER NO. 105400ZAE

https://truckmanualshub.com/

HOW TO USE THE MANUAL

This manual contains illustrations and parts lists of components and assemblies which make up the machine. Each page consists of the name of the assembly or component, a figure number, reference numbers, part numbers, part names, and the quantities of the parts used.

Assembly or component name helps identify the illustration and parts list for each figure. This name also helps locate the general area of the machine where the assembly or component can be located.

Figure numbers are used to identify each assembly or component and to group these assemblies or components into major categories.

Reference numbers shown in a column refer to the numbered parts in the illustration. This ties the part in the illustration to the part number and description in the parts list.

An asterisk indicates information about the item has changed since the previous release of the parts manual. A note in the Remarks column often explains the change.

Part numbers are used to identify individual parts or part assemblies.

Part descriptions provide the name of the part, plus additional information such as dimensional specifications and what parts are grouped together to form part assemblies, which helps you identify the part(s).

Quantities listed for each figure are only for that assembly or component and not the total used per machine.

This parts manual is not intended to be a complete guide for machine service or repairs. Contact your Vermeer dealer for any of your service or technical requirements.

ORDERING PARTS

Parts for repair or replacement are available through our network of authorized dealers located throughout the world.

Use only authorized Vermeer parts for repair or replacement. Always give the serial number and model number of the machine for which parts are being ordered. When ordering parts for component(s), which are not manufactured by Vermeer Corporation, also give the serial number of that component(s). Order all parts by part number, part name, and quantity needed.

UPDATING AND REORDERING MANUALS

The parts lists, illustrations, and specifications in this manual are based on the latest information available at time of publication. Your machine may have product improvements and options not yet contained in this manual.

Vermeer Corporation reserves the right to make changes at any time without notice or obligation to you.

Your dealer will receive notice of these changes and can assist you with accurate parts identification when ordering.

A copy of this manual is supplied with each machine. Additional copies are available through your dealer. When ordering additional manuals, use the reorder number listed on the front cover and the quantity needed.

No part of this manual may be reproduced in any form or by any means, electronic or mechanical, including photocopying, recording, or by any information storage and retrieval systems, without the express written consent of Vermeer Corporation.

Copyright © 2004-2008 Vermeer Corporation
All rights reserved.
Vermeer Corporation
1210 Vermeer Road East, P.O. Box 200
Pella, Iowa 50219-0200, USA+

Decal / Resource Library Assemblies - Section 1

Decal Assembly - Domestic - (Deleted) . . . . . Fig 1-1r01
Decal Assembly - Domestic . . . . . Fig 1-1x01
Decal Assembly - Domestic . . . . . Fig 1-1x02
Decal Assembly - Domestic . . . . . Fig 1-1x03
Decal Assembly - Domestic . . . . . Fig 1-1x04
Decal Assembly - Domestic . . . . . Fig 1-1x05
Decal Assembly - Domestic . . . . . Fig 1-1x06
Decal Assembly - Domestic . . . . . Fig 1-1x07
Decal Assembly - Domestic . . . . . Fig 1-1
Decal Assembly - International - (Deleted). . . . . Fig 1-2r01
Decal Assembly - International . . . . . Fig 1-2x01
Decal Assembly - International . . . . . Fig 1-2x02
Decal Assembly - International . . . . . Fig 1-2x03
Decal Assembly - International . . . . . Fig 1-2x04
Decal Assembly - International . . . . . Fig 1-2x05
Decal Assembly - International . . . . . Fig 1-2x06
Decal Assembly - International . . . . . Fig 1-2
Decal Assembly - Domestic . . . . . Fig 1-3r01
Decal Location Assembly . . . . . Fig 1-3
Decal Assembly - Domestic . . . . . Fig 1-4r01
Decal Location Assembly . . . . . Fig 1-4
Decal Assembly - Domestic . . . . . Fig 1-5r01
Literature Box Assembly . . . . . Fig 1-5

Frame Assemblies - Section 2

Main Frame Assembly . . . . . Fig 2-1
Rack Frame Assembly (10’ Rack) . . . . . Fig 2-2r01
Rack Frame Assembly (10’ Rack) . . . . . Fig 2-2
Rack Frame Assembly (15’ Rack) . . . . . Fig 2-3
Track, Chain, Roller, and Tightener Assembly . . . . . Fig 2-4r01
Track, Chain, Roller, and Tightener Assembly . . . . . Fig 2-4
Track Planetary Assembly. . . . . Fig 2-5
Rotation Gearbox/Carriage Assembly . . . . . Fig 2-6r01
Rotation Gearbox/Carriage Assembly . . . . . Fig 2-6
Rod Position Indicator Assembly. . . . . Fig 2-7
Umbrella Assembly . . . . . Fig 2-8
Drive Chuck Assembly . . . . . Fig 2-9r01
Drive Chuck Assembly . . . . . Fig 2-9

Engine Assemblies - Section 3

Engine Assembly Components. . . . . Fig 3-1r01
Engine Assembly Components. . . . . Fig 3-1
Engine Assembly Components. . . . . Fig 3-2
Pump Drive Assembly . . . . . Fig 3-3
Engine Mount Assembly . . . . . Fig 3-4
Engine Hood Assembly. . . . . Fig 3-5r01

Engine Hood Assembly. . . . . Fig 3-5
Engine Shield Latch Assembly . . . . . Fig 3-6
Hood Pivot Assembly . . . . . Fig 3-7r01
Hood Pivot Assembly . . . . . Fig 3-7
Radiator Assembly . . . . . Fig 3-8
Radiator Shroud Assembly . . . . . Fig 3-9r01
Radiator Shroud Assembly . . . . . Fig 3-9
Air Cleaner Assembly. . . . . Fig 3-10
Muffler Assembly . . . . . Fig 3-11
Fuel Tank Assembly (15’ Rack) . . . . . Fig 3-12
Fuel Tank Assembly (10’ Rack) . . . . . Fig 3-13
Ether Starter System Assembly . . . . . Fig 3-14

Hydraulic Assemblies - Section 4

Hydraulic Component Location Diagram - Implement System (15’ Rack) . . . . . Fig 4-1
Hydraulic Component Location Diagram - Implement System (10’ Rack) . . . . . Fig 4-2
Hydraulic Component Location Diagram - Ground Drive (15’ Rack) . . . . . Fig 4-3
Hydraulic Component Location Diagram - Ground Drive (10’ Rack) . . . . . Fig 4-4
Hydraulic Component Location Diagram - Rotation System (15’ Rack) . . . . . Fig 4-5r01
Hydraulic Component Location Diagram - Rotation System (15’ Rack) . . . . . Fig 4-5
Hydraulic Component Location Diagram - Rotation System (10’ Rack) . . . . . Fig 4-6r01
Hydraulic Component Location Diagram - Rotation System (10’ Rack) . . . . . Fig 4-6
Hydraulic Component Location Diagram - Thrust/Pullback System (15’ Rack) . . . . . Fig 4-7r01
Hydraulic Component Location Diagram - Thrust/Pullback System (15’ Rack) . . . . . Fig 4-7
Hydraulic Component Location Diagram - Thrust/Pullback System (10’ Rack) . . . . . Fig 4-8r01
Hydraulic Component Location Diagram - Thrust/Pullback System (10’ Rack) . . . . . Fig 4-8
Hydraulic Component Location Diagram - Water System (15’ Rack) . . . . . Fig 4-9
Hydraulic Component Location Diagram - Water System (10’ Rack) . . . . . Fig 4-10
Hydraulic Component Location Diagram - Auto Greaser . . . . . Fig 4-11r01
Hydraulic Component Location Diagram - Auto Greaser . . . . . Fig 4-11
Hydraulic Oil Tank Assembly . . . . . Fig 4-12r01
Hydraulic Oil Tank Assembly . . . . . Fig 4-12
Hydraulic Pump Assembly (Rotation). . . . . Fig 4-13r01
Hydraulic Pump Assembly (Rotation). . . . . Fig 4-13
Hydraulic Pump Assembly (Thrust/Pullback) . . . . . Fig 4-14r01
Hydraulic Pump Assembly (Thrust/Pullback) . . . . . Fig 4-14
Hydraulic Pump Assembly (PFC/Implement). . . . . Fig 4-15
Rotation Drive Motor Hydraulic Assembly. . . . . Fig 4-16
Track Drive Motor Assembly. . . . . Fig 4-17
Thrust/Pullback Drive Motor Assembly . . . . . Fig 4-18
Water Pump Drive Motor Assembly . . . . . Fig 4-19
Proportional /Dump Valve Assembly . . . . . Fig 4-20
Torque Limiter/Thrust Limiter Valve Assembly . . . . . Fig 4-21
Three Speed/Loop Flush Valve Assembly. . . . . Fig 4-22
Solenoid Valve Assembly - Three Speed Gearbox . . . . . Fig 4-23r01
Solenoid Valve Assembly - Three Speed Gearbox . . . . . Fig 4-23
Control Valve Assembly - Transport Drive. . . . . Fig 4-24r01
Control Valve Assembly - Transport Drive. . . . . Fig 4-24
Control Valve Assembly - Outrigger/Rack . . . . . Fig 4-25
Control Valve Assembly - Brake . . . . . Fig 4-26
Control Valve Assembly - Return . . . . . Fig 4-27
Rack Lift Cylinder Assembly. . . . . Fig 4-28
Outrigger Assembly . . . . . Fig 4-29
Water Valve On-Off Cylinder Assembly . . . . . Fig 4-30r01

Water Valve On-Off Cylinder Assembly . . . . . Fig 4-30
Oil Cooler Assembly . . . . . Fig 4-31
Hydraulic Oil Filter Assembly . . . . . Fig 4-32
Hose Bulkhead Assembly . . . . . Fig 4-33
Hose Carrier Mount/Bulkhead Assembly . . . . . Fig 4-34r01
Hose Carrier Mount/Bulkhead Assembly . . . . . Fig 4-34
Lock Cylinder/Bulkhead Assembly . . . . . Fig 4-35r01
Lock Cylinder/Bulkhead Assembly . . . . . Fig 4-35
Miscellaneous Supplies . . . . . Fig 4-36
Auto Greaser Assembly . . . . . Fig 4-37r01
Auto Greaser Assembly . . . . . Fig 4-37

Control / Electrical Assemblies - Section 5

Control Console/Console Mount Assembly (S/N 491-504) . . . . . Fig 5-1r01
Control Console/Console Mount Assembly (S/N 491-504) . . . . . Fig 5-1
Control Console/Console Mount Assembly (S/N 505-) . . . . . Fig 5-1Ar01
Control Console/Console Mount Assembly (S/N 505-) . . . . . Fig 5-1A
Gauge Panel Assembly (15’ Rack) . . . . . Fig 5-2
Setup Control Panel Assembly (15’ Rack) . . . . . Fig 5-3
Setup Control Panel Assembly (10’ Rack) . . . . . Fig 5-4
Starter Control Panel Assembly (15’ Rack) . . . . . Fig 5-5r01
Starter Control Panel Assembly (15’ Rack) . . . . . Fig 5-5
Starter Control Panel Assembly (10’ Rack) . . . . . Fig 5-6r01
Starter Control Panel Assembly (10’ Rack) . . . . . Fig 5-6
Display Control Panel Assembly (15’ Rack) . . . . . Fig 5-7r01
Display Control Panel Assembly (15’ Rack) . . . . . Fig 5-7
Display Control Panel Assembly (10’ Rack) . . . . . Fig 5-8r01
Display Control Panel Assembly (10’ Rack) . . . . . Fig 5-8
Rotation Control Panel Assembly (15’ Rack) . . . . . Fig 5-9
Rotation Control Panel Assembly (10’ Rack) . . . . . Fig 5-10
Thrust Control Panel Assembly . . . . . Fig 5-11r01
Thrust Control Panel Assembly . . . . . Fig 5-11
Accessory Panel Assembly (15’ Rack) . . . . . Fig 5-12r01
Accessory Panel Assembly (15’ Rack) . . . . . Fig 5-12
Accessory Panel Assembly (10’ Rack) . . . . . Fig 5-13r01
Accessory Panel Assembly (10’ Rack) . . . . . Fig 5-13
Rear Angle/Throttle/Outrigger Control Panel Assembly . . . . . Fig 5-14
Electrical Harness Assembly - Console, Engine, Rack . . . . . Fig 5-15
Seat Assembly . . . . . Fig 5-16
Seat Actuator Assembly . . . . . Fig 5-17
Throttle Control Solenoid Assembly . . . . . Fig 5-18
Wing Panel Assembly (10’ Rack) . . . . . Fig 5-19r01
Wing Panel Assembly (10’ Rack) . . . . . Fig 5-19
Break Panel Assembly (10’ Rack) . . . . . Fig 5-20r01
Break Panel Assembly (10’ Rack) . . . . . Fig 5-20
Battery Assembly . . . . . Fig 5-21r01
Battery Assembly . . . . . Fig 5-21
Engine Electrical Panel Assembly . . . . . Fig 5-22
Work Light Assembly . . . . . Fig 5-23
Auto Rod Loader Sequencer Assembly (15’ Rack) . . . . . Fig 5-24
Autoloader - Electrical Assembly (10’ Rack) . . . . . Fig 5-25r01
Autoloader - Electrical Assembly (10’ Rack) . . . . . Fig 5-25
Auto Greaser Electrical Control Assembly . . . . . Fig 5-26r01
Auto Greaser Electrical Control Assembly . . . . . Fig 5-26

https://truckmanualshub.com/

Miscellaneous Supplies . . . . . Fig 5-27
DRC Series Connectors . . . . . Fig 5-28
DRC Series Connectors . . . . . Fig 5-28
DT Series Connectors . . . . . Fig 5-29
DTHD Series/HDFB Modules . . . . . Fig 5-30
DT Series Diode/Buss Blocks . . . . . Fig 5-31
Remote Lockout Assembly (15’ Rack) . . . . . Fig 5-32
Remote Lockout Assembly (10’ Rack) . . . . . Fig 5-33

Safety Assemblies - Section 6

Voltage Assembly . . . . . Fig 6-1
Safety Features- Gloves, Boots, Cones . . . . . Fig 6-2

Water System Assemblies - Section 7

Water Pump Assembly . . . . . Fig 7-1r01
Water Pump Assembly . . . . . Fig 7-1r01
Water Pump Assembly . . . . . Fig 7-1
Water Pump Assembly . . . . . Fig 7-1
Antifreeze System Assembly . . . . . Fig 7-2
Wash Wand Assembly . . . . . Fig 7-3

Vise Clamp Assemblies - Section 8

Hydraulic Component Location Diagram-Vise Clamp (15’ Rack) . . . . . Fig 8-1
Hydraulic Component Location Diagram-Vise Clamp (10’ Rack) . . . . . Fig 8-2
Clamp Assembly . . . . . Fig 8-3r01
Clamp Assembly . . . . . Fig 8-3
Vise Clamp Valve Assembly . . . . . Fig 8-4
Jaw Cylinder Assembly . . . . . Fig 8-5
Rotation Cylinder Assembly . . . . . Fig 8-6
Zap Alert Coil Assembly . . . . . Fig 8-7
Tubing Tong Assembly . . . . . Fig 8-8

Rod Loader Assemblies (15’ Rack) - Section 9

Hydraulic Component Location Diagram-Rod Loader (15’ Rack) . . . . . Fig 9-1
Rod Selector Assembly (15’ Rack) . . . . . Fig 9-2r01
Rod Selector Assembly (15’ Rack) . . . . . Fig 9-2
Rod Loader Arm/Magnet Assembly (15’ Rack) . . . . . Fig 9-3r01
Rod Loader Arm/Magnet Assembly (15’ Rack) . . . . . Fig 9-3
Rod Loader Guard Assembly (15’ Rack) . . . . . Fig 9-4
Rod Loader Valve Assembly (15’ Rack) . . . . . Fig 9-5
Rod Loader Motor Assembly (15’ Rack) . . . . . Fig 9-6
Rod Lift Cylinder Assembly (15’ Rack) . . . . . Fig 9-7
Rod Box Assembly (600’) (15’ Rack) . . . . . Fig 9-8
Rod Box Assembly (300’) (15’ Rack) . . . . . Fig 9-9
Wire Harness Carrier Assembly (15’ Rack) . . . . . Fig 9-10
Hydraulic Assembly - Flow Divider (15’ Rack) . . . . . Fig 9-11

Rod Loader Assemblies (10’ Rack) - Section 10

Hydraulic Component Location Diagram-Rod Loader (10’ Rack) . . . . . Fig 10-1
Lift, Pick-Place Assembly - Front (10’ Rack). . . . . Fig 10-2r01
Lift, Pick-Place Assembly - Front (10’ Rack). . . . . Fig 10-2
Feed/Blocker Cylinder Assembly - Front (10’ Rack). . . . . Fig 10-3r01
Feed/Blocker Cylinder Assembly - Front (10’ Rack). . . . . Fig 10-3
Lift, Pick-Place Assembly - Rear (10’ Rack) . . . . . Fig 10-4r01
Lift, Pick-Place Assembly - Rear (10’ Rack) . . . . . Fig 10-4
Feed/Blocker Cylinder Assembly - Rear (10’ Rack) . . . . . Fig 10-5r01
Feed/Blocker Cylinder Assembly - Rear (10’ Rack) . . . . . Fig 10-5
Rod Loader Valve Assembly (10’ Rack). . . . . Fig 10-6
Rod Box Assembly - Tall (10’ Rack). . . . . Fig 10-7r01
Rod Box Assembly - Tall (10’ Rack). . . . . Fig 10-7
Rod Box Assembly - Short (10’ Rack) . . . . . Fig 10-8r01
Rod Box Assembly - Short (10’ Rack) . . . . . Fig 10-8
Hydraulic Assembly - Flow Divider (10’ Rack). . . . . Fig 10-9

Stakedown Assemblies - Section 11

Hydraulic Component Location Diagram-Stationary Stakedown (15’ Rack) . . . . . Fig 11-1
Hydraulic Component Location Diagram-Stationary Stakedown (10’ Rack) . . . . . Fig 11-2
Stationary Stakedown Assembly. . . . . Fig 11-3r01
Stationary Stakedown Assembly. . . . . Fig 11-3
Stakedown Valve Assembly . . . . . Fig 11-4r01
Stakedown Valve Assembly . . . . . Fig 11-4

Locator - Digitrak - Section 12

Location Package, Mark III - Digitrak - Domestic & International . . . . . Fig 12-1r01
Location Package, Mark III - Digitrak - Domestic & International . . . . . Fig 12-1
Location Package, Mark III - Digitrak (W/remote Display) Domestic . . . . . Fig 12-2r01
Location Package, Mark III - Digitrak (W/remote Display) Domestic . . . . . Fig 12-2
Location Package, Mark III - Digitrak (W/remote Display) International . . . . . Fig 12-3r01
Location Package, Mark III - Digitrak (W/remote Display) International . . . . . Fig 12-3
Data Logger, Mark III - Digitrak. . . . . Fig 12-4

Locator - Spot D Tek Assemblies - Section 13

Location Package, Spot D Tek II.2 Utility . . . . . Fig 13-1
Location Package, Spot D Tek II.2, III & IIIA . . . . . Fig 13-2r01
Location Package, Spot D Tek II.2, III & IIIA . . . . . Fig 13-2
Location Package, Spot D Tek Mole Mapping System . . . . . Fig 13-3
Spot D Tek II.2 Directional Probe (Repairable) Components . . . . . Fig 13-4

Component Breakdown - Section 14

Rotation Gearbox Components (S/N 563-) . . . . . Fig 14-1r01
Rotation Gearbox Components . . . . . Fig 14-1
Hydraulic Motor Components (S/N 563-) . . . . . Fig 14-2r01

Hydraulic Motor Components . . . . . Fig 14-2
Hydraulic Motor Components (S/N 563-) . . . . . Fig 14-3r01
Hydraulic Motor Components . . . . . Fig 14-3
Hydraulic Motor Components . . . . . Fig 14-4
Hydraulic Motor Components . . . . . Fig 14-5
Hydraulic Motor Components . . . . . Fig 14-6
Hydraulic Motor Components . . . . . Fig 14-7
Hydraulic Motor Components . . . . . Fig 14-8
Hydraulic Motor Components . . . . . Fig 14-9
Planetary Gearbox Components . . . . . Fig 14-10
Park Brake Components . . . . . Fig 14-11
Hydraulic Pump Components . . . . . Fig 14-12r01
Hydraulic Pump Components . . . . . Fig 14-12
Hydraulic Pump Components . . . . . Fig 14-13
Water Pump Components . . . . . Fig 14-14
Water Pump Components . . . . . Fig 14-14
Thrust Limiter Valve Components . . . . . Fig 14-15
Rack Control Valve Components . . . . . Fig 14-16
Brake Valve Components . . . . . Fig 14-17
Hydraulic Return Components . . . . . Fig 14-18
Vise Valve Components . . . . . Fig 14-19
Rod Loader Valve Components . . . . . Fig 14-20
Valve Components - Stakedown . . . . . Fig 14-21
Torque Limiter Valve Components . . . . . Fig 14-22
Solenoid Valve Components . . . . . Fig 14-23
Three Speed/Loop Flush Valve Components . . . . . Fig 14-24
Proportional/Dump Valve Components . . . . . Fig 14-25
Shuttle Valve Components . . . . . Fig 14-26
Valve Components - Rod Loader . . . . . Fig 14-27
Control Valve Components . . . . . Fig 14-28
Valve Components - 1” High Pressure Ball . . . . . Fig 14-29
Auto Greaser Pump Components . . . . . Fig 14-30r01
Auto Greaser Pump Components . . . . . Fig 14-30
Measuring Valve Components . . . . . Fig 14-31r01
Measuring Valve Components . . . . . Fig 14-31
Measuring Valve Components . . . . . Fig 14-32r01
Measuring Valve Components . . . . . Fig 14-32
Grease Cylindered Components . . . . . Fig 14-33
Hydraulic Cylinder Components - 3.50 X 7.00 . . . . . Fig 14-34
Hydraulic Cylinder Components - 2.50 X 3.00 . . . . . Fig 14-35
Hydraulic Cylinder Components - 2.00 X 5.00 . . . . . Fig 14-36
Hydraulic Cylinder Components - 4.00 X 7.00 . . . . . Fig 14-37r01
Hydraulic Cylinder Components - 4.00 X 7.00 . . . . . Fig 14-37
Hydraulic Lock Cylinder Components . . . . . Fig 14-38
Hydraulic Cylinder Components - 1.50 X 24.00 . . . . . Fig 14-39
Hydraulic Cylinder Components - 2.50 X 6.625 . . . . . Fig 14-40
Hydraulic Cylinder Components - 1.00 X 3.50 . . . . . Fig 14-41
Hydraulic Cylinder Components - 1.00 X 9.75 . . . . . Fig 14-42
Hydraulic Cylinder Components - 2.00 X 3.25 . . . . . Fig 14-43
Hydraulic Cylinder Components - 2.00 X 3.375 . . . . . Fig 14-44
Hydraulic Cylinder Components - 1.50 X 11.50 . . . . . Fig 14-45
Hydraulic Cylinder Components - 2.00 X 15.00 . . . . . Fig 14-46
Air Cleaner Components . . . . . Fig 14-47
Hose Carrier Components (10’ Rack) . . . . . Fig 14-48r01
Hose Carrier Components . . . . . Fig 14-48
Rotation Control Handle Components (Left) . . . . . Fig 14-49
Rotation Control Handle Components (Right) . . . . . Fig 14-50

https://truckmanualshub.com/

Rotation Control Grip Components (Right) . . . . . Fig 14-51r01
Rotation Control Grip Components (Right) . . . . . Fig 14-51
Rotation Control Grip Components (Left). . . . . Fig 14-52r01
Rotation Control Grip Components (Left). . . . . Fig 14-52
Water Pressure Manifold Components . . . . . Fig 14-53r01
Water Pressure Manifold Components . . . . . Fig 14-53
Tubing Tong Components . . . . . Fig 14-54
Auto Greaser Cylinder Components - 1” x 2 3/8” . . . . . Fig 14-55
Auto Greaser Valve Components. . . . . Fig 14-56
Hose Carrier Components (15’ Rack) . . . . . Fig 14-57

https://truckmanualshub.com/

Decal Assembly - Domestic - (Deleted) Fig 1-1r01

FIGURE DELETED DUE TO UPDATE

https://truckmanualshub.com/

Decal Assembly - Domestic - (Deleted) Fig 1-1r01

REF. NO.	*	PART NO.	DESCRIPTION	QTY.	REMARKS
		Revision Date	July, 2004		Deleted From Manual

https://truckmanualshub.com/

Decal Assembly - Domestic Fig 1-1x01

https://truckmanualshub.com/

Decal Assembly - Domestic Fig 1-1x01

REF. NO.	*	PART NO.	DESCRIPTION	QTY.	REMARKS
		Revision Date	June, 2004		Update In Illustration & Parts List.
1		7000B157	DECAL-MODEL D33X44	1	
2		70000787	DECAL 12”VERMEER LOGO	1	
3		7000B059	DECAL - VERMEER 6”	1	
4		70000615	DECAL-MODEL NAVIGATOR (SMALL)	1	
5		70000614	DECAL-MODEL NAVIGATOR (BIG)	1	
6		70000774	DECAL 2 1/2”VERMEER STRIPE	4.00”	
		901228112	DECAL ASSEMBLY-D33X44 (DOMESTIC)	1	Fig. 1-1x01 Thru 1-1x07

https://truckmanualshub.com/

Decal Assembly - Domestic Fig 1-1x02

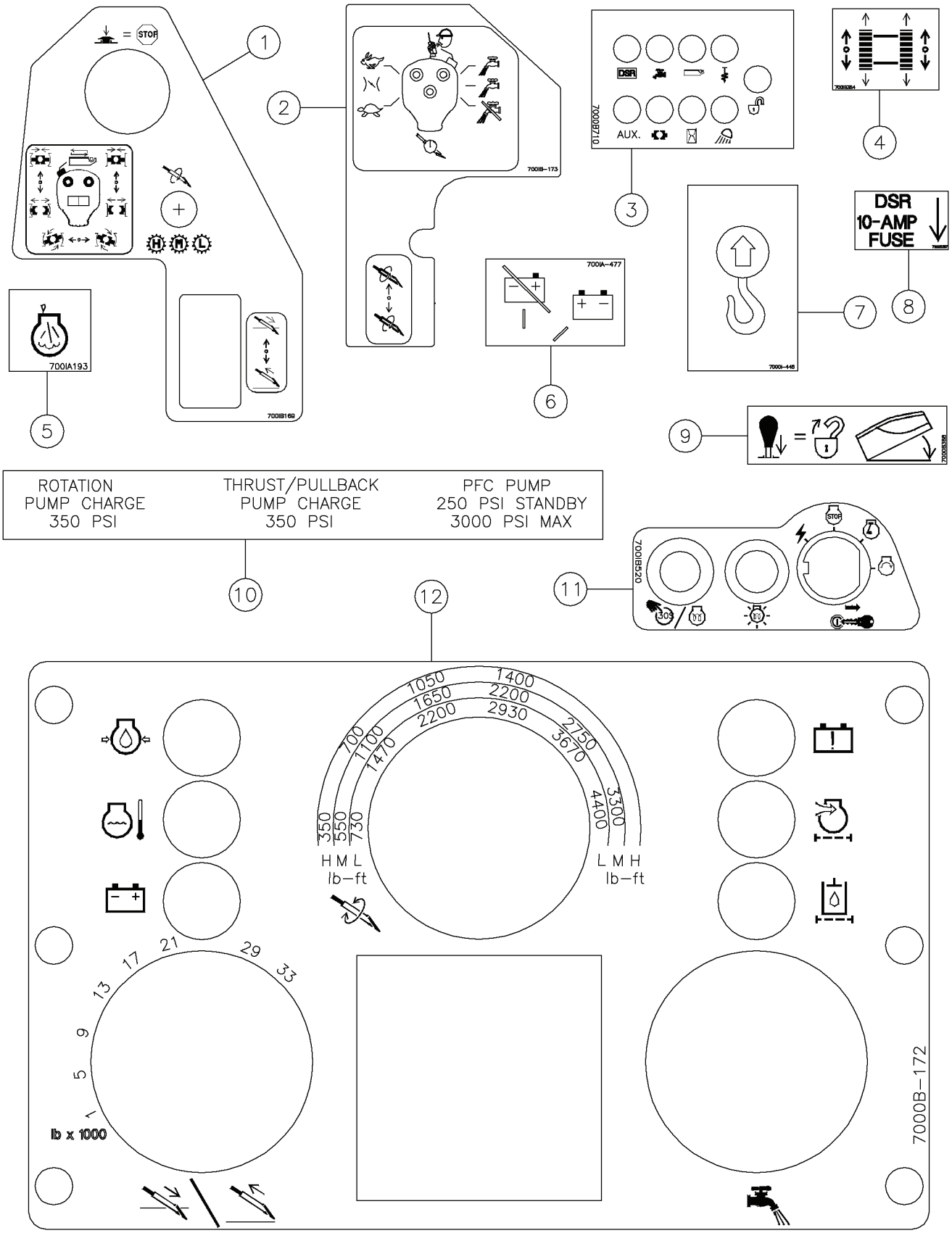

https://truckmanualshub.com/

Decal Assembly - Domestic Fig 1-1x02

REF. NO.	*	PART NO.	DESCRIPTION	QTY.	REMARKS
		Revision Date	June, 2004		Update In Illustration & Parts List.
1		7000B169	DECAL - CONTROL	1	
2		7000B173	DECAL - CONTROL	1	
3		700IB710	DECAL - FUSE CONTROLS	1	10’ RACK
4		700IB354	DECAL - CONTROL TRACK	1	
5		700IA193	DECAL-ETHER STARTING (UND)	1	15’ RACK
6		700IA477	DECAL_BATTERY SWITCH (UG)	1	
7		7000I445	DECAL-LIFT POINT	4	
8		7000B387	DECAL - DSR	1	
9		7000B388	DECAL - HOOD LATCH	1	
10		7000B300	DECAL - TEST POINT	1	
11		700IB520	DECAL - STARTER PANEL	1	10’ RACK
12		7000B172	DECAL - CONTROL	1	15’ RACK
		901228112	DECAL ASSEMBLY-D33X44 (DOMESTIC)	1	Fig. 1-1x01 Thru 1-1x07

https://truckmanualshub.com/

Decal Assembly - Domestic Fig 1-1x03

Notice ·Avis ·Hinweis ·Avviso ·Aviso ·

If you purchased this product as used equipment, you can receive a FREE Operator's Manual by contacting:

Si vous avez achet? cet ?quipement d'occasion, vous pouvez recevoir un manuel de l'op?rateur GRATUIT en composant le:

Wenn Sie diese Maschine gebraucht erworben haben, k?nnen Sie eine KOSTENLOSE Betriebsanleitung wie folgt anfordern:

Se si ? comprata la presente macchina usata, si pu? ricevere una copia del manuale dell'operatore IN OMAGGIO, contattando:

Si este producto que ha comprado es un equipo usado, puede recibir un manual del operador GRATUITO llamando al:

Vermeer Manufacturing Company
ATTN: Customer Data Department
1210 Vermeer Road East, PO BOX 200
Pella, IA 50219 USA
800-829-0051 or 641-628-3141
Telephone: English speaking only
T?l?phone: en anglais uniquement
Telefon: Nur in Englischer Sprache
Telefono: tutte le comunicazioni saranno in inglese
Tel?fono: en ingl?s solamente

OR by completing and mailing the Used Equipment Registration Form enclosed in the Operator's Manual.

OU en remplissant et en envoyant le formulaire d'enregistrement de l'?quipement d'occasion inclus dans le manuel de l'op?rateur.

ODER das in der Betriebsanleitung enthaltene Formular zur Registrierung gebrauchter Ausr?stung ausf?llen und einsenden.

OPPURE compilando e spedendo il modulo di registrazione per macchinari usati, accluso al manuale dell'operatore.

O rellenando y enviando por correo el impreso de registro de equipos usados incluido en el manual del operador.

1

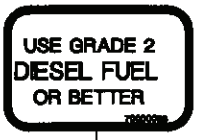

2

3

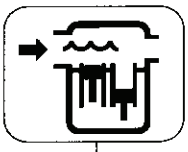

4

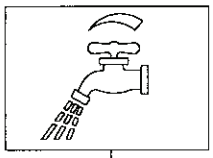

5

https://truckmanualshub.com/

Decal Assembly - Domestic Fig 1-1x03

REF. NO.	*	PART NO.	DESCRIPTION	QTY.	REMARKS
		Revision Date	June, 2004		Update In Illustration & Parts List.
1		2326940	DECAL-NOTICE TO OWNERS	1	
2		70000098	DECAL-DIESEL (AT/UND)	1	
3		2326756	DECAL-HYDRAULIC OIL	1	
4		700IB438	DECAL - WARNING LIGHT	1	15’ RACK
5		7000B170	DECAL - WATERFLOW	1	15’ RACK
		901228112	DECAL ASSEMBLY-D33X44 (DOMESTIC)	1	Fig. 1-1x01 Thru 1-1x07

https://truckmanualshub.com/

Decal Assembly - Domestic Fig 1-1x04

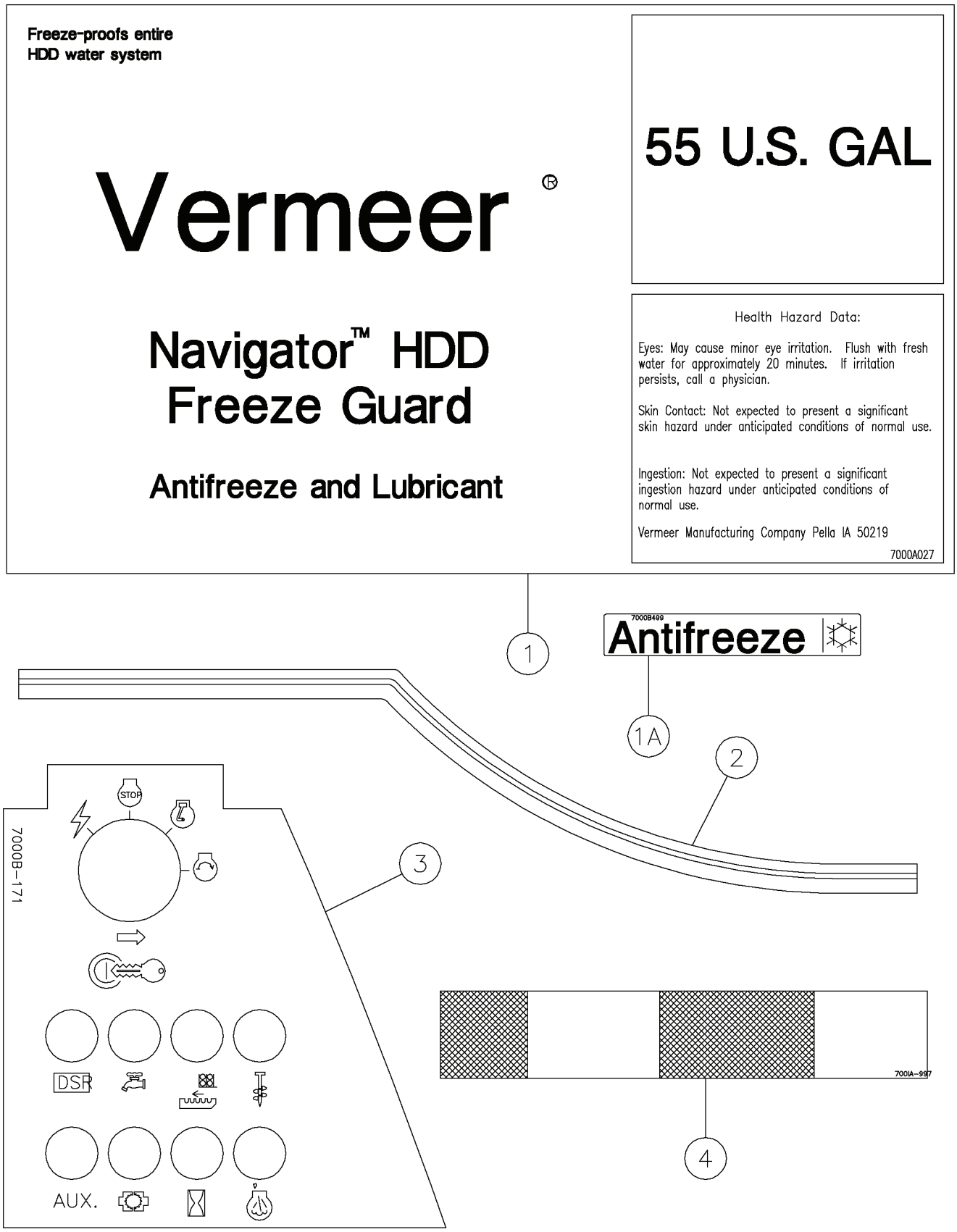

https://truckmanualshub.com/

Decal Assembly - Domestic Fig 1-1x04

REF. NO.	*	PART NO.	DESCRIPTION	QTY.	REMARKS
		Revision Date	June, 2004		Update In Illustration & Parts List.
1		7000A027	DECAL-NAVIGATOR FREEZE GUARD	1	15’ RACK
1A		7000B499	DECAL - ANTIFREEZE	1	10’ RACK
2		700IB179	DECAL - 3” STRIPE (HOOD)	1	
3		7000B171	DECAL - CONTROL	1	
4		700IA997	DECAL - GEARBOX POSITION	1	
		901228112	DECAL ASSEMBLY-D33X44 (DOMESTIC)	1	Fig. 1-1x01 Thru 1-1x07

https://truckmanualshub.com/

Decal Assembly - Domestic Fig 1-1x05

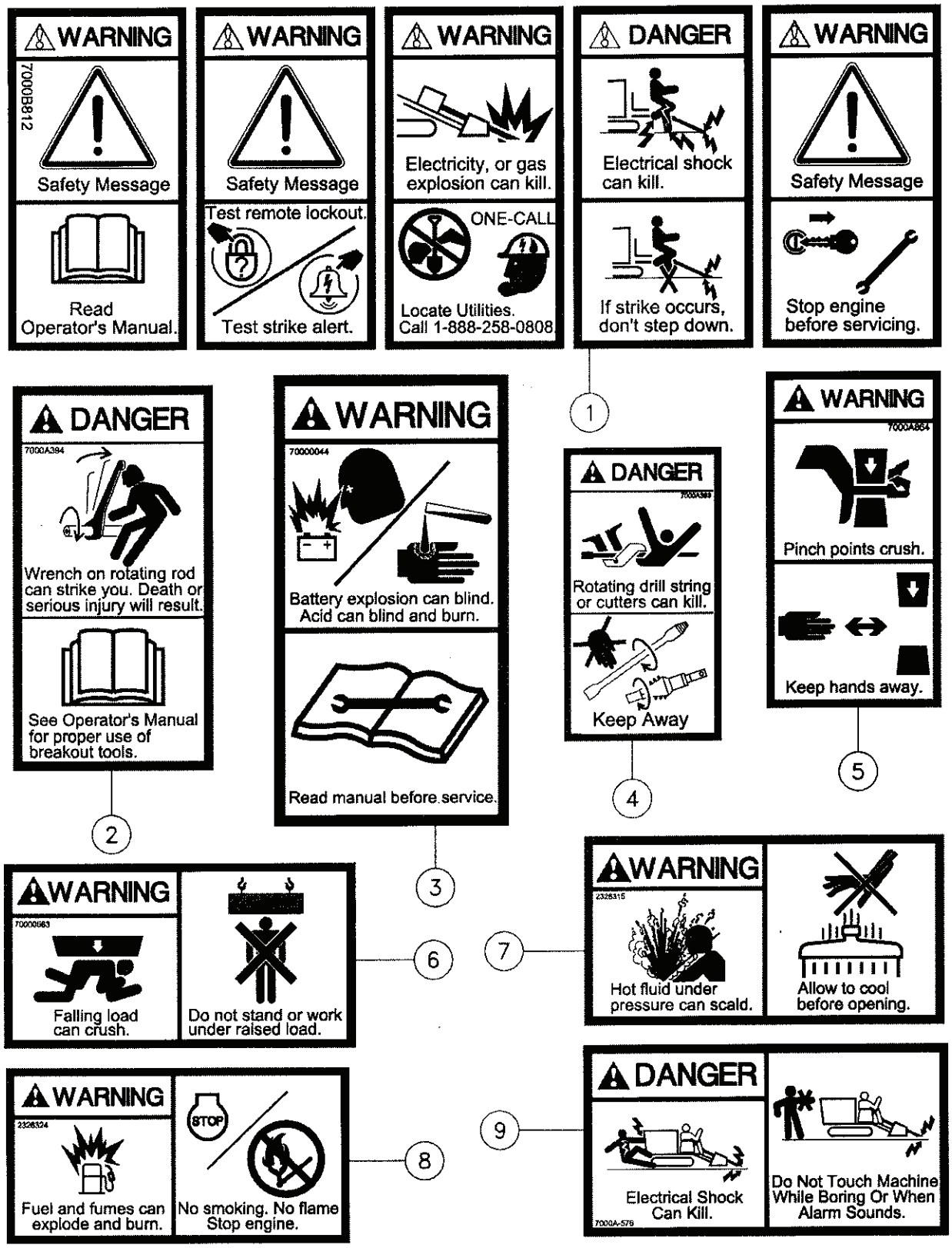

https://truckmanualshub.com/

Decal Assembly - Domestic Fig 1-1x05

REF. NO.	*	PART NO.	DESCRIPTION	QTY.	REMARKS
		Revision Date	June, 2004		Update In Illustration & Parts List.
1		7000B812	DECAL - WARNING	1	
2		7000A394	DECAL - WARNING	1	
3		70000044	DECAL-WARNING(AT/UND)	1	
4		7000A393	DECAL - DANGER	1	
5		7000A864	DECAL-WARNING DOMESTIC	4	
6		70000563	DECAL-WARNING (UND)	2	
7		2326315	DECAL-WARNING	1	
8		2326324	DECAL-WARNING/REFUEL	1	
9		7000A576	DECAL-DANGER	3	
		901228112	DECAL ASSEMBLY-D33X44 (DOMESTIC)	1	Fig. 1-1x01 Thru 1-1x07

https://truckmanualshub.com/

Decal Assembly - Domestic Fig 1-1x06

GREASE CHART

7000B-295

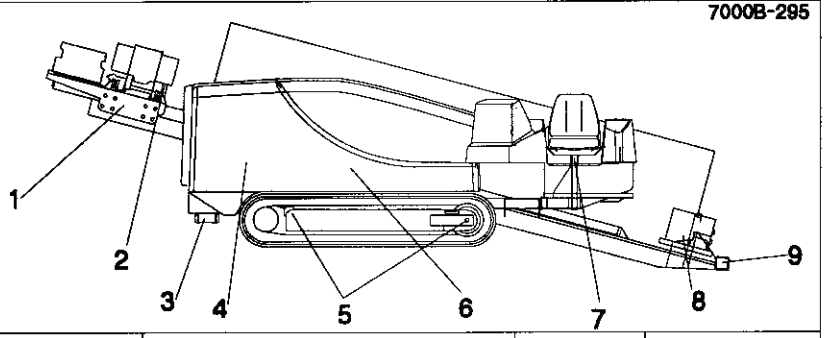

REFERENCE NUMBER	DESCRIPTION	NUMBER SHOTS	INTERVALS HOURS
1.	RACK GUIDE	1	DAILY
2.	GEARBOX SLIDE	1	10
3.	STABILIZER CYLINDER (8 PLACES)	2	50
4.	RACK PIVOT (OPPOSITE SIDE)	1	50
5.	TRACK IDLER ROLLERS	2	50
6.	RACK PIVOT (OPPOSITE SIDE)	2	50
7.	SEAT PIVOT	2	50
8.	VISE JAWS (25 PLACES)	2	50
9.	GUIDE ROLLERS	4	DAILY

See Operator's Manual for detailed lubrication instructions.

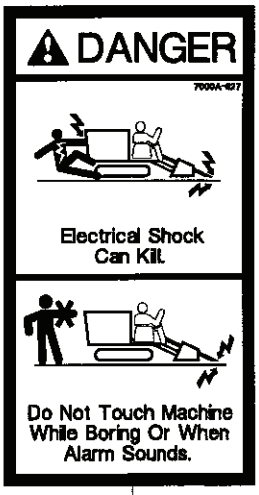

3

1 1A 2

LUBRICANT CHART

LOCATION	CAPACITY	TYPE
ENGINE OIL	WITH FILTER 11.5 QT (10.9L) W/O FILTER 10.0 QT (9.5L)	15W-40 HD -ROTELLA T MULTIGRADE -CUMMINS PREMIUM BLUE
HYDRAULIC OIL TANK	60 GAL (227L)	-VERMEER HYPOWER 46 -VERMEER HYPOWER 68 -VERMEER HYPOWER 100
DRILL FLUID PUMP CRANKCASE	4.5 QT (4.3L)	SAE-40 -VERMEER XTRAGOLD 40
ENGINE RADIATOR	9.5 GAL (36L)	MIX 50% WATER AND 50% ETHYLENE GLYCOL BASE ANTIFREEZE TO -34° F (-37°C) PROTECTION
SYSTEM ANTIFREEZE TANK	6 GAL (23L)	RV ANTIFREEZE
TRACK PLANETARIES	HALF FULL	ALL PURPOSE GEAR LUBE 80W-90

See Operator's Manual for detailed instructions. 7000B-294

https://truckmanualshub.com/

Decal Assembly - Domestic Fig 1-1x06

REF. NO.	*	PART NO.	DESCRIPTION	QTY.	REMARKS
		Revision Date	June, 2004		Update In Illustration & Parts List.
1		7000B295	DECAL - GREASE CHART	1	15’ RACK
1A		7000B709	DECAL - GREASE CHART	1	10’ RACK
2		7000B294	DECAL - FLUIDS	1	
3		7000A627	DECAL-DANGER	3	
		901228112	DECAL ASSEMBLY-D33X44 (DOMESTIC)	1	Fig. 1-1x01 Thru 1-1x07

https://truckmanualshub.com/

Decal Assembly - Domestic Fig 1-1x07

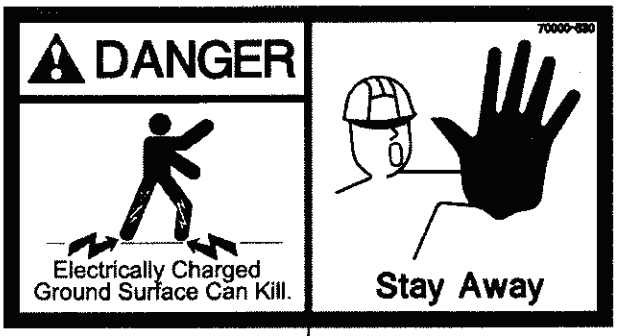

1

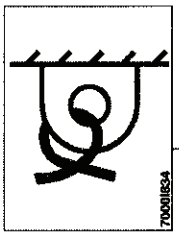

3

VERMEER HY POWER
This hydraulic oil was installed at the factory.
Refer to service manual for other equivalent oils
70000-394

2

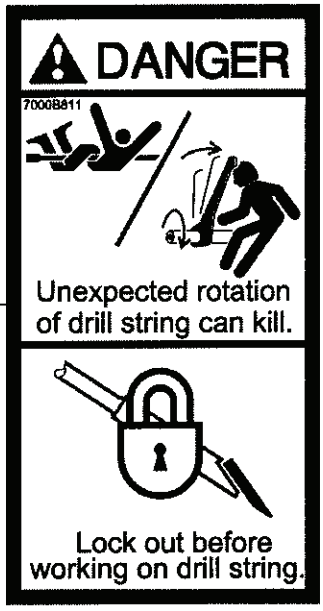

5

4

This product may be covered by one or more of the following patents:

AU 756,936	US 5,590,041	US 6,195,922	US 6,477,795
CA D 79,593	US 5,607,280	US 6,247,544	US 6,484,818
DE 696 11 846	US 5,611,496	US 6,289,997	US 6,491,115
DE 202 14 959.5	US 5,657,803	US 6,308,787	US 6,497,296
DE Des. 96 006 85.4	US 5,659,985	US 6,315,062	US 6,511,260
EP 772,543	US 5,687,807	US 6,332,502	US 6,516,899
EP 830,522	US 5,692,548	US 6,357,537	US 6,517,733
EP 885,343	US 5,692,549	US 6,360,830	US 6,533,046
EP 1,153,194	US 5,704,142	US 6,367,564	US 6,533,052
GB 2,053,636	US 5,720,354	US 6,374,928	US 6,554,082
HK 1015859	US 5,746,278	US 6,382,330	US 6,557,651
RU 2,158,952	US 5,768,811	US 6,389,360	US 6,577,954
US Des. 308,682	US 5,778,991	US 6,390,207	US 6,585,062
US Des. 396,837	US 5,819,859	US 6,408,952	US 6,588,516
US 4,848,423	US 5,845,689	US 6,408,954	US 6,651,755
US 5,205,181	US 5,904,210	US 6,412,715	US 6,659,202
US 5,219,380	US 5,944,121	US 6,422,495	US 6,668,946
US 5,237,888	US 5,950,942	US 6,435,286	US 6,684,538
US 5,291,964	US 6,014,996	US 6,439,319	US 6,701,647
US 5,509,220	US 6,050,350	US 6,446,365	US 6,719,069
US 5,544,055	US 6,109,367	US 6,446,889	US 6,725,579
US 5,553,407	US 6,119,376	US 6,454,025	US 6,729,050
US 5,556,253	US 6,138,932	US 6,470,976	
US 5,574,642	US 6,154,987	US 6,474,931	
US 5,588,474	US 6,161,630	US 6,474,932	

This product may be covered by one or more of the following licensed patents:

US 4,694,913	US 4,867,255	US 5,148,880
US 4,858,704	US 4,953,838	US 5,799,740

(OTHER U.S. AND FOREIGN PATENTS PENDING)

70008118 rev H

6

https://truckmanualshub.com/

Decal Assembly - Domestic Fig 1-1x07

REF. NO.	*	PART NO.	DESCRIPTION	QTY.	REMARKS
		Revision Date	June, 2004		Update In Illustration & Parts List.
1		70000530	DECAL-DANGER	4	
2		70000394	DECAL-VERMEER HY POWER	1	
3		7000I834	DECAL - TIE DOWN POINT	6	
4		7000B119	DECAL - PATENT INDUSTRIAL	1	
5		7000B811	DECAL - DANGER - RLE - DOMESTIC	1	
6		7000B304	DECAL - WARNING	1	
		901228112	DECAL ASSEMBLY-D33X44 (DOMESTIC)	1	Fig. 1-1x01 Thru 1-1x07

https://truckmanualshub.com/

Decal Assembly - Domestic Fig 1-1

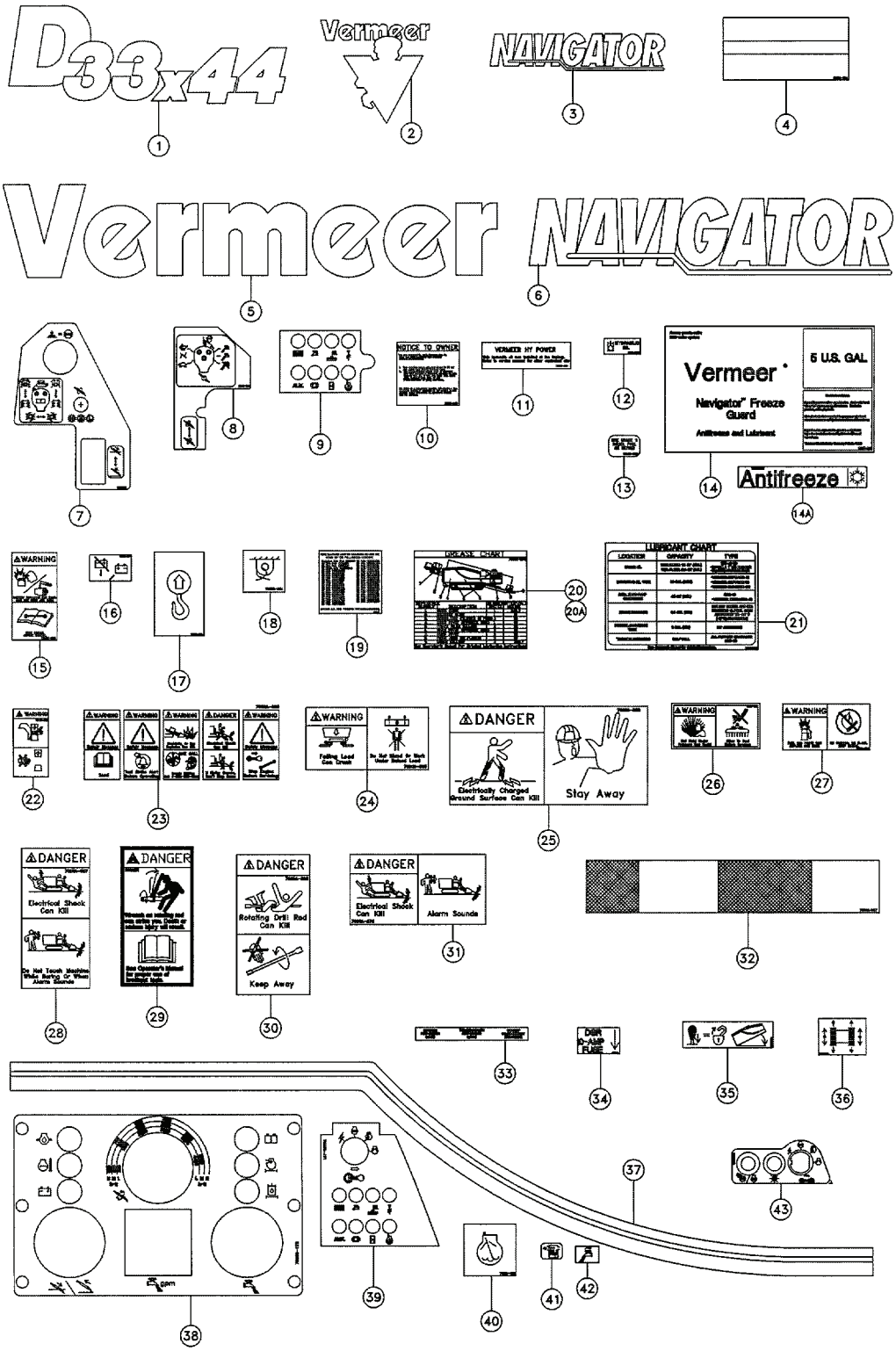

https://truckmanualshub.com/

Decal Assembly - Domestic Fig 1-1

REF. NO.	*	PART NO.	DESCRIPTION	QTY.	REMARKS
1		7000B157	DECAL-MODEL D33X44	1	
2		70000787	DECAL 12”VERMEER LOGO	1	
3		70000615	DECAL-MODEL NAVIGATOR (SMALL)	1	
4		70000774	DECAL 2 1/2”VERMEER STRIPE	4.00”	
5		7000B059	DECAL - VERMEER 6”	1	
6		70000614	DECAL-MODEL NAVIGATOR (BIG)	1	
7		7000B169	DECAL - CONTROL	1	
8		7000B173	DECAL - CONTROL	1	
9		700IB710	DECAL - BREAKER PANEL	1	10’ RACK
10		2326940	DECAL-NOTICE TO OWNERS	1	
11		70000394	DECAL-VERMEER HY POWER	1	
12		2326756	DECAL-HYDRAULIC OIL	1	
13		70000098	DECAL-DIESEL (AT/UND)	1	
14		7000A027	DECAL-NAVIGATOR FREEZE GUARD	1	15’ RACK
14A		7000B499	DECAL - ANTIFREEZE	1	10’ RACK
15		70000044	DECAL-WARNING(AT/UND)	1	
16		700IA477	DECAL_BATTERY SWITCH (UG)	1	
17		7000I445	DECAL-LIFT POINT	2	
18		7000I834	DECAL - TIE DOWN POINT	6	
19		7000B119	DECAL - PATENT	1	
20		7000B295	DECAL - GREASE CHART	1	15’ RACK
20A		7000B709	DECAL - GREASE CHART	1	10’ RACK
21		7000B294	DECAL - FLUIDS	1	
22		7000A864	DECAL-WARNING DOMESTIC	2	
23		7000A528	DECAL-WARNING	1	
24		70000563	DECAL-WARNING (UND)	2	
25		70000530	DECAL-DANGER	4	
26		2326315	DECAL-WARNING	1	
27		2326324	DECAL-WARNING/REFUEL	1	
28		7000A627	DECAL-DANGER	3	
29		7000A394	DECAL - WARNING	1	
30		7000A393	DECAL - DANGER	1	
31		7000A576	DECAL-DANGER	3	
32		700IA997	DECAL - GEARBOX POSITION	1	
33		7000B300	DECAL - TEST POINT	1	
34		7000B387	DECAL - DSR	1	
35		7000B388	DECAL - HOOD LATCH	1	
36		700IB354	DECAL - CONTROL TRACK	1	
37		700IB179	DECAL - 3” STRIPE	1	
38		7000B172	DECAL - CONTROL	1	15’ RACK
39		7000B171	DECAL - CONTROL	1	
40		700IA193	DECAL-ETHER STARTING (UND)	1	15’ RACK
41		700IB438	DECAL - WARNING LIGHT	1	15’ RACK
42		7000B170	DECAL - WATERFLOW	1	15’ RACK
43		700IB520	DECAL - STARTER PANEL	1	10’ RACK
44		901228112	DECAL ASSEMBLY-D33X44(DOMESTIC)	1	INC ALL ITEMS IN THIS FIGURE

https://truckmanualshub.com/

Decal Assembly - International - (Deleted) Fig 1-2r01

FIGURE DELETED DUE TO UPDATE

https://truckmanualshub.com/

Decal Assembly - International - (Deleted) Fig 1-2r01

REF. NO.	*	PART NO.	DESCRIPTION	QTY.	REMARKS
		Revision Date	July, 2004		Deleted From Manual

https://truckmanualshub.com/

Decal Assembly - International Fig 1-2x01

https://truckmanualshub.com/

Decal Assembly - International Fig 1-2x01

REF. NO.	*	PART NO.	DESCRIPTION	QTY.	REMARKS
1		7000B157	DECAL-MODEL D33X44	1	
2		70000787	DECAL 12”VERMEER LOGO	1	
3		7000B059	DECAL - VERMEER 6”	1	
4		70000615	DECAL-MODEL NAVIGATOR (SMALL)	1	
5		70000614	DECAL-MODEL NAVIGATOR (BIG)	1	
6		70000774	DECAL 2 1/2”VERMEER STRIPE	4.00”	
		901228113	DECAL ASSEMBLY -D33X44 (INTERNATIONAL)	1	INC. FIG. 1-2X02 THRU 1-2X06

https://truckmanualshub.com/

Decal Assembly - International Fig 1-2x02

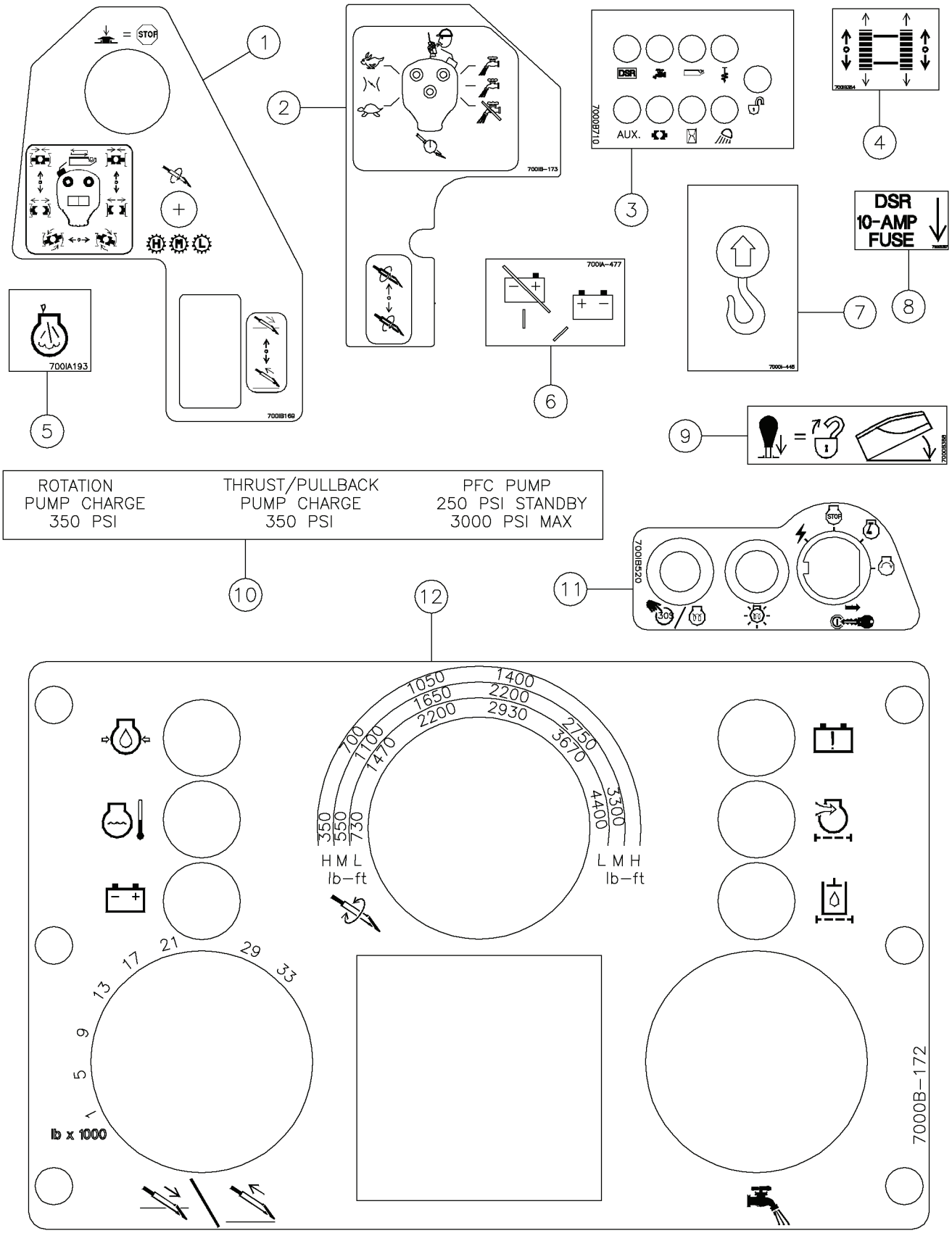

https://truckmanualshub.com/

Decal Assembly - International Fig 1-2x02

REF. NO.	*	PART NO.	DESCRIPTION	QTY.	REMARKS
		Revision Date	June, 2004		Update In Illustration & Parts List.
1		7000B169	DECAL - CONTROL	1	
2		7000B173	DECAL - CONTROL	1	
3		700IB710	DECAL - FUSE CONTROLS	1	10’ RACK
4		700IB354	DECAL - CONTROL TRACK	1	
5		700IA193	DECAL-ETHER STARTING (UND)	1	15’ RACK
6		700IA477	DECAL_BATTERY SWITCH (UG)	1	
7		7000I445	DECAL-LIFT POINT	4	
8		7000B387	DECAL - DSR	1	
9		7000B388	DECAL - HOOD LATCH	1	
10		7000B300	DECAL - TEST POINT	1	
11		700IB520	DECAL - STARTER PANEL	1	10’ RACK
12		7000B172	DECAL - CONTROL	1	15’ RACK
		901228113	DECAL ASSEMBLY -D33X44 (INTERNATIONAL)	1	INC. FIG. 1-2X02 THRU 1-2X06

https://truckmanualshub.com/

Decal Assembly - International Fig 1-2x03

Notice •Avis •Hinweis •Avviso •Aviso •

If you purchased this product as used equipment, you can receive a FREE Operator's Manual by contacting:

Si vous avez achet? cet ?quipement d'occasion, vous pouvez recevoir un manuel de l'op?rateur GRATUIT en composant le:

Wenn Sie diese Maschine gebraucht erworben haben, k?nnen Sie eine KOSTENLOSE Betriebsanleitung wie folgt anfordern:

Se si ? comprata la presente macchina usata, si pu? ricevere una copia del manuale dell'operatore IN OMAGGIO, contattando:

Si este producto que ha comprado es un equipo usado, puede recibir un manual del operador GRATUITO llamando al:

• • • • • • •

Vermeer Manufacturing Company
ATTN: Customer Data Department
1210 Vermeer Road East, PO BOX 200
Pella, IA 50219 USA
800-829-0051 or 641-628-3141
Telephone: English speaking only
T?l?phone: en anglais uniquement
Telefon: Nur in Englischer Sprache
Telefono: tutte le comunicazioni saranno in inglese
Tel?fono: en ingl?s solamente

• • • • • • •

OR by completing and mailing the Used Equipment Registration Form enclosed in the Operator's Manual.

OU en remplissant et en envoyant le formulaire d'enregistrement de l'?quipement d'occasion inclus dans le manuel de l'op?rateur.

ODER das in der Betriebsanleitung enthaltene Formular zur Registrierung gebrauchter Ausr?stung ausf?llen und einsenden.

OPPURE compilando e spedendo il modulo di registrazione per macchinari usati, accluso al manuale dell'operatore.

O rellenando y enviando por correo el impreso de registro de equipos usados incluido en el manual del operador.

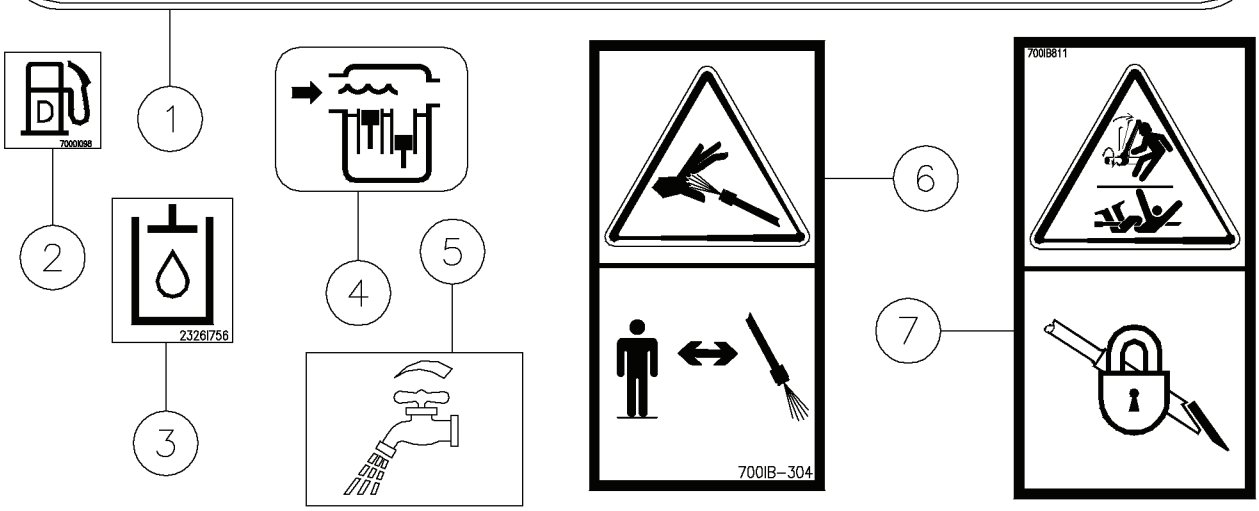

https://truckmanualshub.com/

Decal Assembly - International Fig 1-2x03

REF. NO.	*	PART NO.	DESCRIPTION	QTY.	REMARKS
		Revision Date	June, 2004		Update In Illustration & Parts List.
1		2326940	DECAL-NOTICE TO OWNERS	1	
2		7000I098	DECAL-DIESEL FUEL	1	
3		2326I756	DECAL-HYDRAULIC FLUID	1	
4		700IB438	DECAL - WARNING LIGHT	1	15’ RACK
5		7000B170	DECAL - WATERFLOW	1	15’ RACK
6		700IB304	DECAL - WARNING	1	
7		700IB811	DECAL - DANGER - RLE INTERNATIONAL	1	
		901228113	DECAL ASSEMBLY -D33X44 (INTERNATIONAL)	1	INC. FIG. 1-2X02 THRU 1-2X06

https://truckmanualshub.com/

Decal Assembly - International Fig 1-2x04

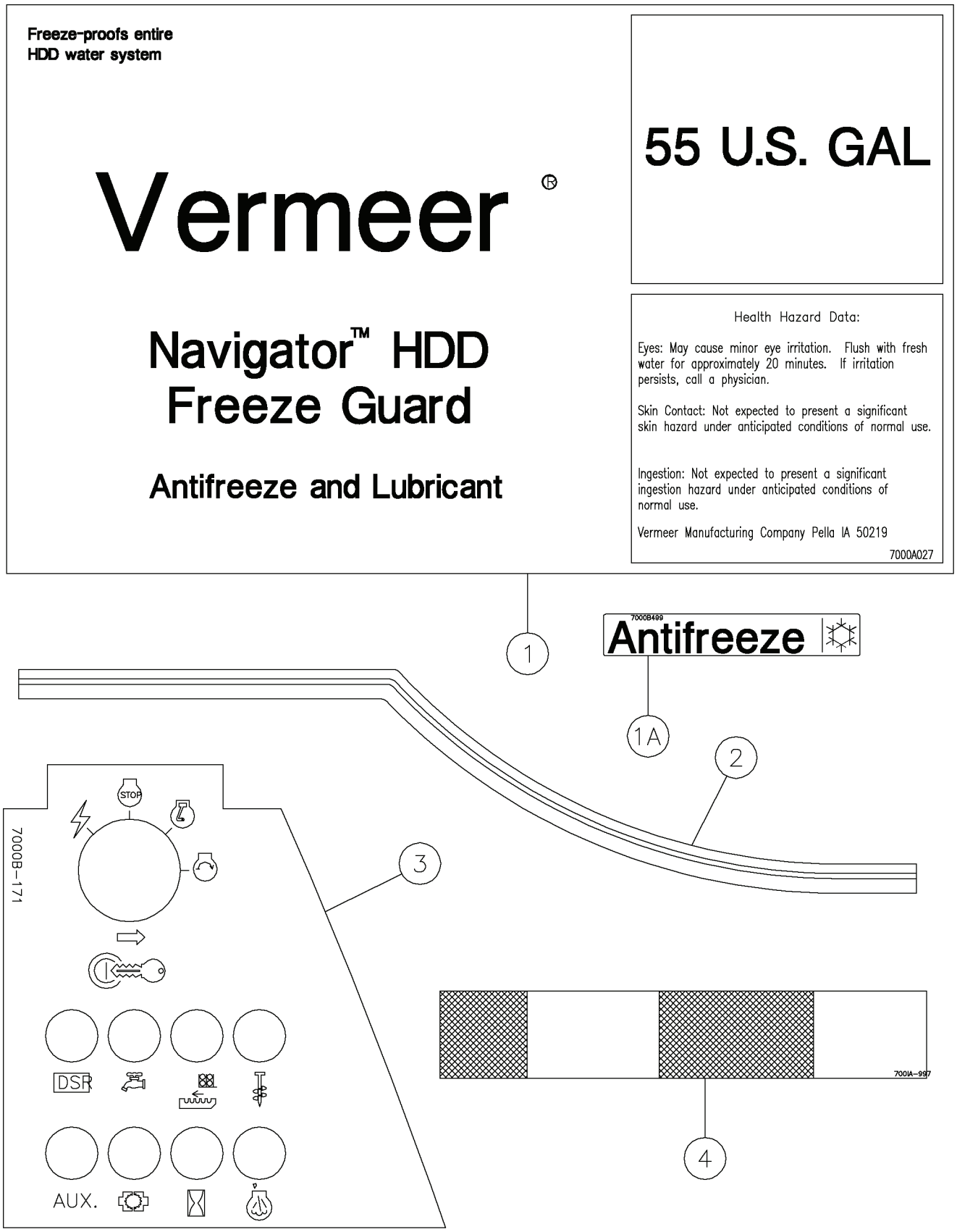

https://truckmanualshub.com/

Decal Assembly - International Fig 1-2x04

REF. NO.	*	PART NO.	DESCRIPTION	QTY.	REMARKS
		Revision Date	June, 2004		Update In Illustration & Parts List.
1		7000A027	DECAL-NAVIGATOR FREEZE GUARD	1	15’ RACK
1A		7000B499	DECAL - ANTIFREEZE	1	10’ RACK
2		700IB179	DECAL - 3” STRIPE (HOOD)	1	
3		7000B171	DECAL - CONTROL	1	
4		700IA997	DECAL - GEARBOX POSITION	1	
		901228113	DECAL ASSEMBLY -D33X44 (INTERNATIONAL)	1	INC. FIG. 1-2X02 THRU 1-2X06

https://truckmanualshub.com/

Decal Assembly - International Fig 1-2x05

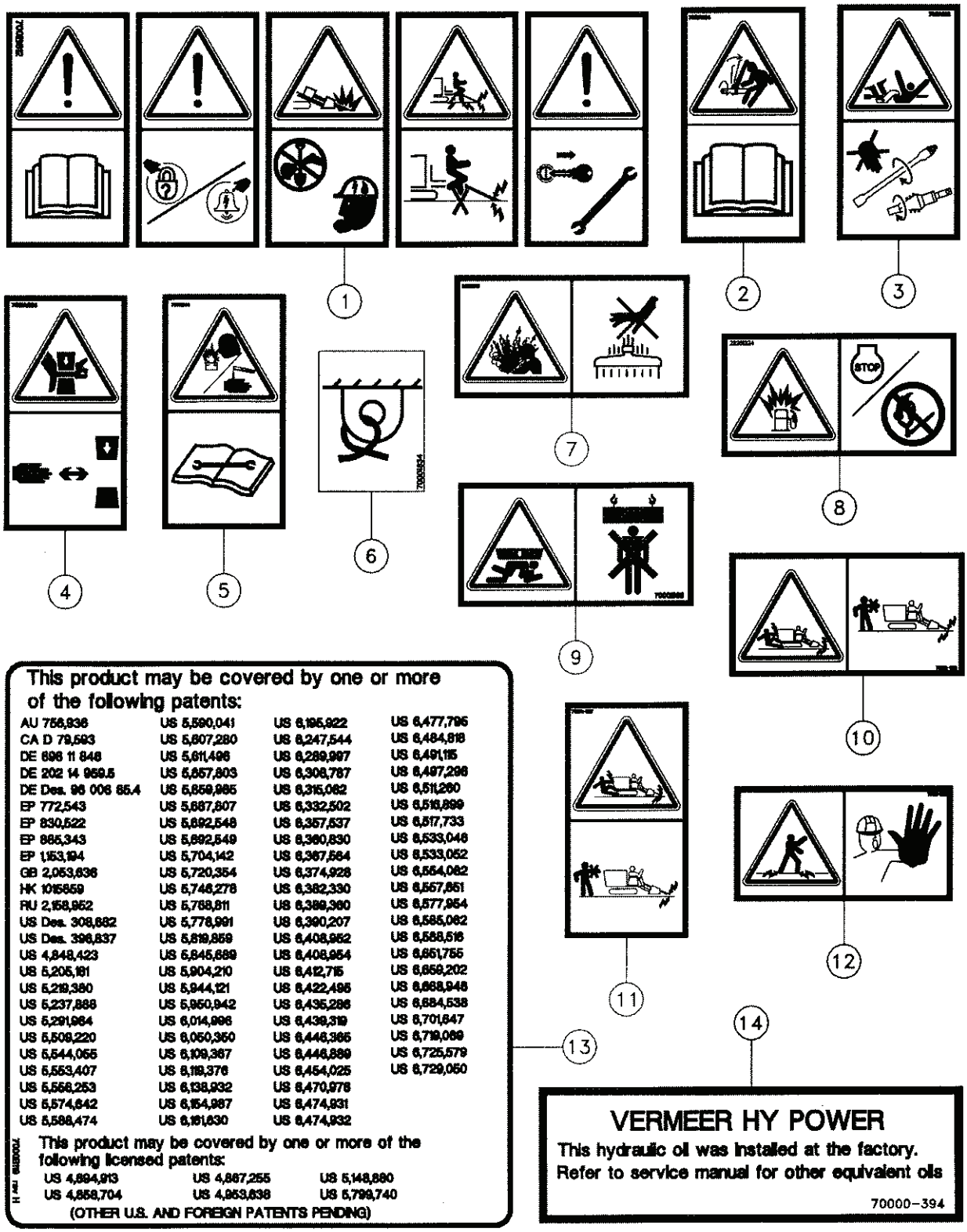

https://truckmanualshub.com/

Decal Assembly - International Fig 1-2x05

REF. NO.	*	PART NO.	DESCRIPTION	QTY.	REMARKS
		Revision Date	June, 2004		Update In Illustration & Parts List.
1		700IB812	DECAL-WARNING	1	
2		700IA394	DECAL - WARNING	1	
3		700IA393	DECAL - DANGER	1	
4		700IA864	DECAL-WARNING INTERNATIONAL	4	
5		7000I044	DECAL-WARNING	1	
6		7000I834	DECAL - TIE DOWN POINT	6	
7		2326I315	DECAL-WARNING	1	
8		2326I324	DECAL - WARING EXPLOSION	1	
9		7000I563	DECAL-WARNING (UND)	2	
10		700IA576	DECAL-DANGER	3	
11		700IA627	DECAL-DANGER	3	
12		7000I530	DECAL-WARNING (NAVIGATORS)	4	
13		7000B119	DECAL - PATENT INDUSTRIAL	1	
14		70000394	DECAL-VERMEER HY POWER	1	
		901228113	DECAL ASSEMBLY -D33X44 (INTERNATIONAL)	1	INC. FIG. 1-2X02 THRU 1-2X06

https://truckmanualshub.com/

Decal Assembly - International Fig 1-2x06

GREASE CHART

7000B-295

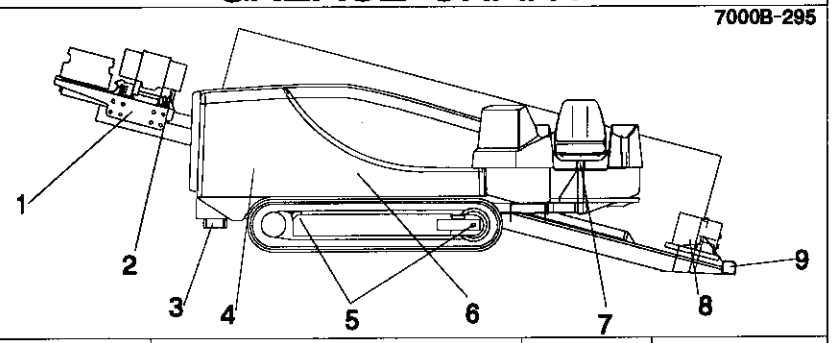

REFERENCE NUMBER	DESCRIPTION	NUMBER SHOTS	INTERVALS HOURS
1.	RACK GUIDE	1	DAILY
2.	GEARBOX SLIDE	1	10
3.	STABILIZER CYLINDER (8 PLACES)	2	50
4.	RACK PIVOT (OPPOSITE SIDE)	1	50
5.	TRACK IDLER ROLLERS	2	50
6.	RACK PIVOT (OPPOSITE SIDE)	2	50
7.	SEAT PIVOT	2	50
8.	VISE JAWS (25 PLACES)	2	50
9.	GUIDE ROLLERS	4	DAILY

See Operator's Manual for detailed lubrication instructions.

1 1A 2

LUBRICANT CHART

LOCATION	CAPACITY	TYPE
ENGINE OIL	WITH FILTER 11.5 QT (10.9L) W/O FILTER 10.0 QT (9.5L)	15W-40 HD -ROTELLA T MULTIGRADE -CUMMINS PREMIUM BLUE
HYDRAULIC OIL TANK	60 GAL (227L)	-VERMEER HYPOWER 46 -VERMEER HYPOWER 68 -VERMEER HYPOWER 100
DRILL FLUID PUMP CRANKCASE	4.5 QT (4.3L)	SAE-40 -VERMEER XTRAGOLD 40
ENGINE RADIATOR	9.5 GAL (36L)	MIX 50% WATER AND 50% ETHYLENE GLYCOL BASE ANTIFREEZE TO -34° F (-37°C) PROTECTION
SYSTEM ANTIFREEZE TANK	6 GAL (23L)	RV ANTIFREEZE
TRACK PLANETARIES	HALF FULL	ALL PURPOSE GEAR LUBE 80W-90

See Operator's Manual for detailed instructions. 7000B-294

https://truckmanualshub.com/

Decal Assembly - International Fig 1-2x06

REF. NO.	*	PART NO.	DESCRIPTION	QTY.	REMARKS
		Revision Date	June, 2004		Update In Illustration & Parts List.
1		7000B295	DECAL - GREASE CHART	1	15’ RACK
1A		7000B709	DECAL - GREASE CHART	1	10’ RACK
2		7000B294	DECAL - FLUIDS	1	
		901228113	DECAL ASSEMBLY -D33X44 (INTERNATIONAL)	1	INC. FIG. 1-2X02 THRU 1-2X06

https://truckmanualshub.com/

Decal Assembly - International Fig 1-2

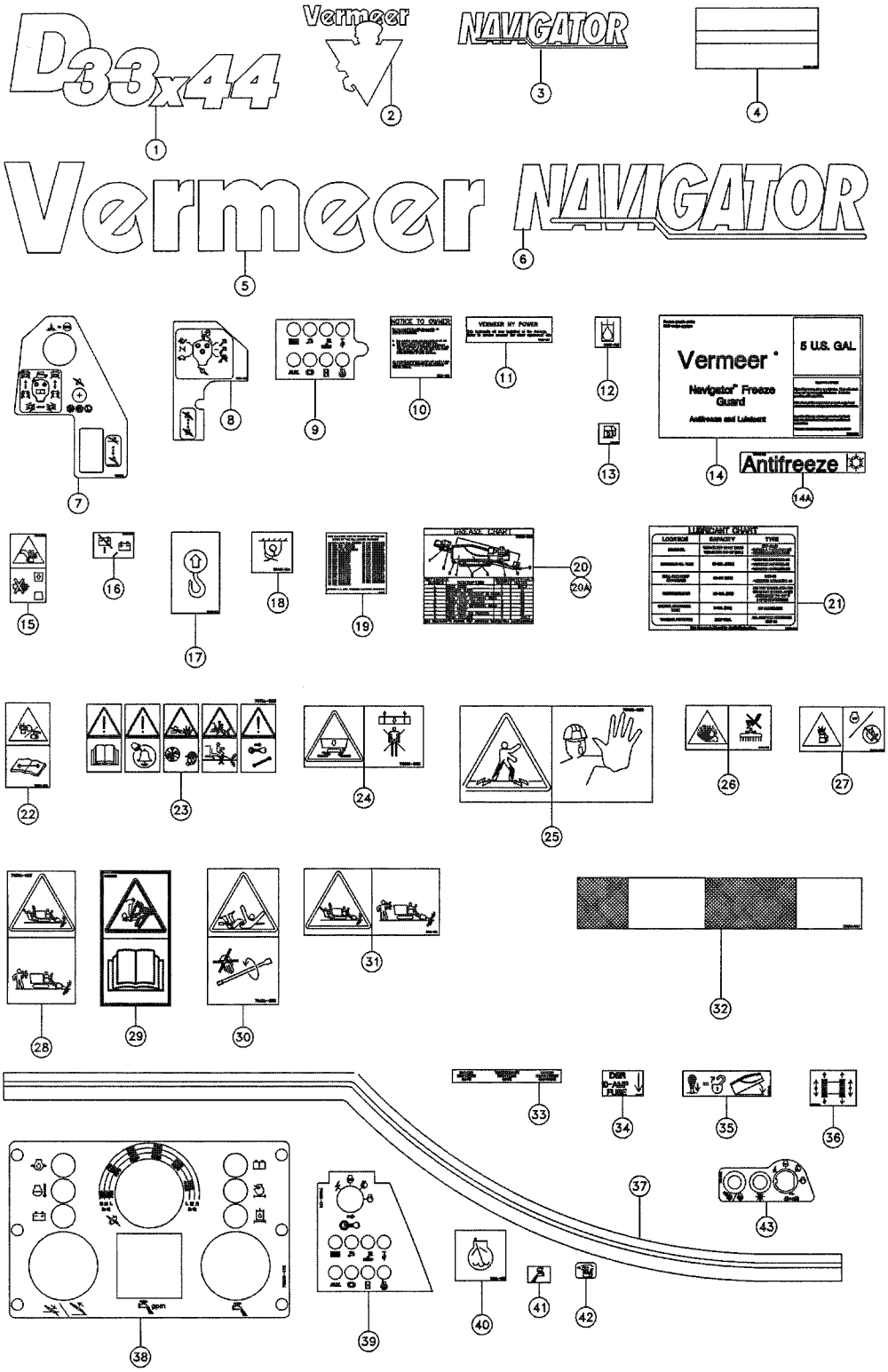

https://truckmanualshub.com/

Decal Assembly - International Fig 1-2

REF. NO.	*	PART NO.	DESCRIPTION	QTY.	REMARKS
1		7000B157	DECAL-MODEL D33X44	1	
2		70000787	DECAL 12”VERMEER LOGO	1	
3		70000615	DECAL-MODEL NAVIGATOR (SMALL)	1	
4		70000774	DECAL 2 1/2”VERMEER STRIPE	4.00”	
5		7000B059	DECAL - VERMEER 6”	1	
6		70000614	DECAL-MODEL NAVIGATOR (BIG)	1	
7		7000B169	DECAL - CONTROL	1	
8		7000B173	DECAL - CONTROL	1	
9		700IB710	DECAL - BREAKER PANEL	1	10’ RACK
10		2326940	DECAL-NOTICE TO OWNERS	1	
11		70000394	DECAL-VERMEER HY POWER	1	
12		2326I756	DECAL-HYDRAULIC FLUID	1	
13		7000I098	DECAL-DIESEL FUEL	1	
14		7000A027	DECAL-NAVIGATOR FREEZE GUARD	1	15’ RACK
14A		7000B499	DECAL - ANTIFREEZE	1	10’ RACK
15		700IA864	DECAL-WARNING INTERNATIONAL	2	
16		700IA477	DECAL_BATTERY SWITCH (UG)	1	
17		7000I445	DECAL-LIFT POINT	2	
18		7000I834	DECAL - TIE DOWN POINT	6	
19		7000B119	DECAL - PATENT	1	
20		7000B295	DECAL - GREASE CHART	1	15’ RACK
20A		7000B709	DECAL - GREASE CHART	1	10’ RACK
21		7000B294	DECAL - FLUIDS	1	
22		7000I044	DECAL-WARNING	1	
23		700IA528	DECAL-WARNING	1	
24		7000I563	DECAL-WARNING (UND)	2	
25		7000I530	DECAL-WARNING (NAVIGATORS)	4	
26		2326I315	DECAL-WARNING	1	
27		2326I324	DECAL-WARNING	1	
28		700IA627	DECAL-DANGER	3	
29		700IA394	DECAL - WARNING	1	
30		700IA393	DECAL - DANGER	1	
31		700IA997	DECAL - GEARBOX POSITION	1	
32		700IA576	DECAL-DANGER	3	
33		7000B300	DECAL - TEST POINT	1	
34		7000B387	DECAL - DSR	1	
35		7000B388	DECAL - HOOD LATCH	1	
36		700IB354	DECAL - CONTROL TRACK	1	
37		700IB179	DECAL - 3” STRIPE	1	
38		7000B172	DECAL - CONTROL	1	15’ RACK
39		7000B171	DECAL - CONTROL	1	
40		700IA193	DECAL-ETHER STARTING (UND)	1	15’ RACK
41		700IB438	DECAL - WARNING LIGHT	1	15’ RACK
42		7000B170	DECAL - WATERFLOW	1	15’ RACK
43		700IB520	DECAL - STARTER PANEL	1	10’ RACK
44		901228113	DECAL ASSEMBLY -D33X44 (INTERNATIONAL)	1	INC ALL ITEMS IN THIS FIGURE

https://truckmanualshub.com/

Decal Assembly - Domestic Fig 1-3r01

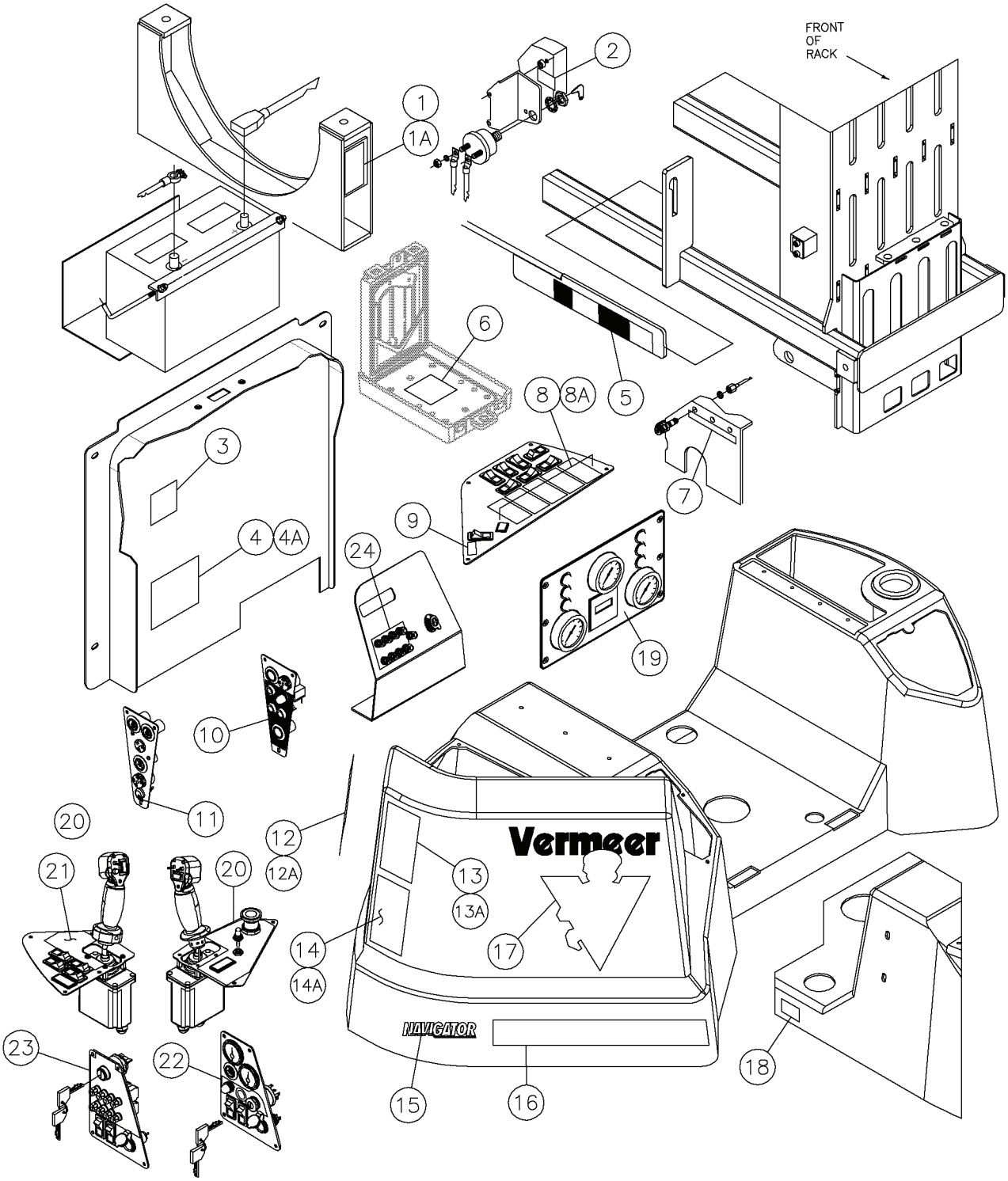

https://truckmanualshub.com/

Decal Assembly - Domestic Fig 1-3r01

REF. NO.	*	PART NO.	DESCRIPTION	QTY.	REMARKS
1		70000044	DECAL-WARNING(AT/UND)	1	DOM.
1A		7000I044	DECAL-WARNING	1	INTL.
2		700IA477	DECAL_BATTERY SWITCH (UG)	1	
3		7000B119	DECAL - PATENT INDUSTRIAL	1	15’ RACK
4		7000B295	DECAL - GREASE CHART	1	10’ RACK
4A		7000B709	DECAL - GREASE CHART	1	
5		700IA997	DECAL - GEARBOX POSITION	1	
6		2326940	DECAL-NOTICE TO OWNERS	1	DOM.
7		7000B300	DECAL - TEST POINT	1	INTL.
8		7000A528	DECAL-WARNING	1	
8A		700IA528	DECAL-WARNING	1	
9		7000B170	DECAL - WATERFLOW	1	
10		700IB836	DECAL - ACCESSORY PANEL	1	15’ RACK
11		700IB438	DECAL - WARNING LIGHT	1	10’ RACK
12		7000A627	DECAL-DANGER	1	DOM.
12A		700IA627	DECAL-DANGER	1	INTL.
13		7000A393	DECAL - DANGER	1	DOM.
13A		700IA393	DECAL - DANGER	1	INTL.
14		7000A394	DECAL - WARNING	1	DOM.
14A		700IA394	DECAL - WARNING	1	INTL.
15		70000615	DECAL-MODEL NAVIGATOR (SMALL)	1	
16		70000774	DECAL 2 1/2”VERMEER STRIPE	21”	
17		70000787	DECAL 12”VERMEER LOGO	1	
18		7000B387	DECAL - DSR	1	
19		7000B172	DECAL - CONTROL	1	
20		7000B169	DECAL - CONTROL	1	
21		7000B173	DECAL - CONTROL	1	
22		700IB520	DECAL - STARTER PANEL	1	15’ RACK
23		7000B171	DECAL - CONTROL	1	10’ RACK
24		700IB710	DECAL - FUSE CONTROLS	1	

https://truckmanualshub.com/

Decal Location Assembly Fig 1-3

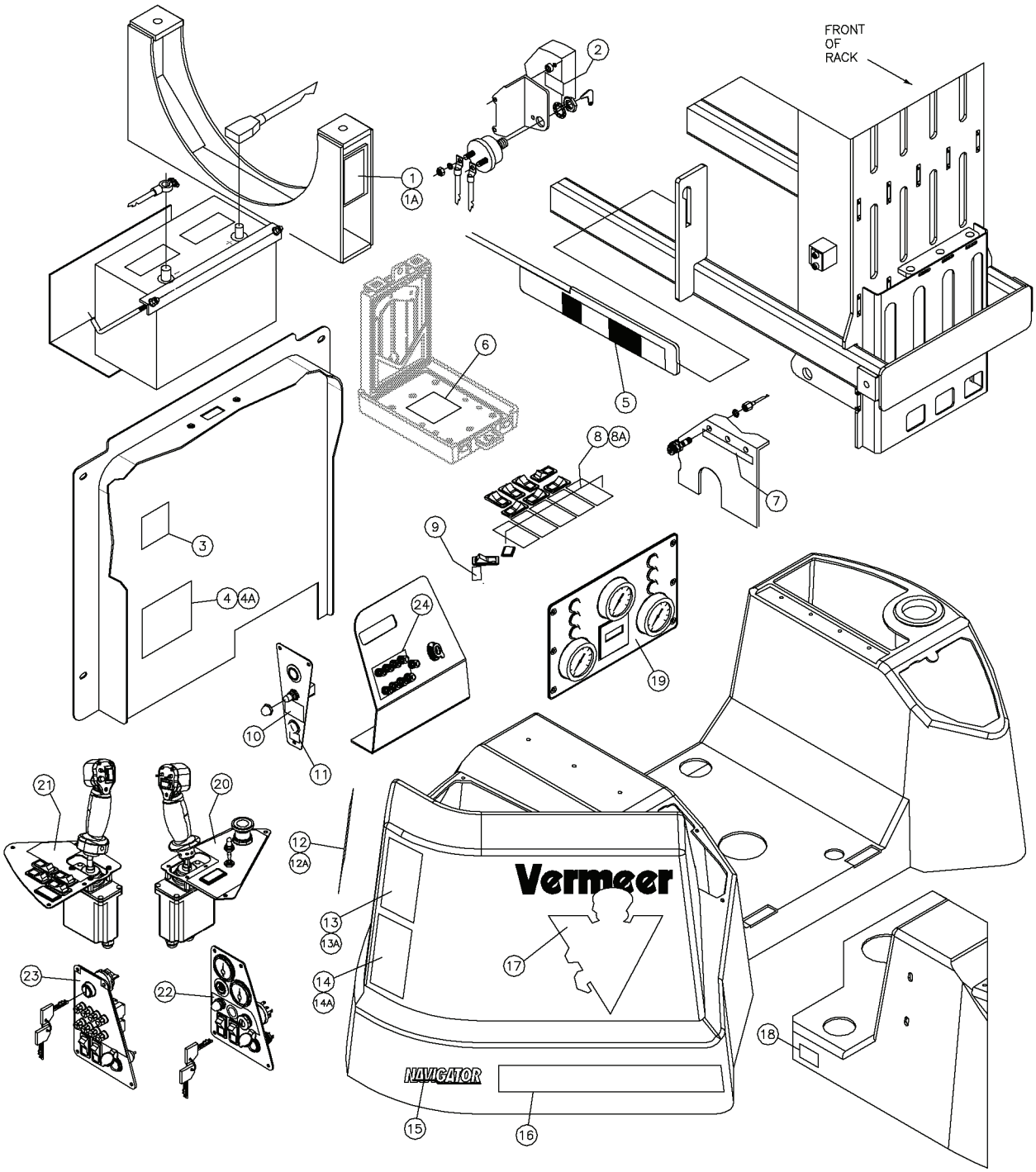

https://truckmanualshub.com/

Decal Location Assembly Fig 1-3

REF. NO.	*	PART NO.	DESCRIPTION	QTY.	REMARKS
1		70000044	DECAL-WARNING(AT/UND)	1	DOM.
1A		7000I044	DECAL-WARNING	1	INTL.
2		700IA477	DECAL_BATTERY SWITCH (UG)	1	
3		7000B119	DECAL - PATENT	1	
4		7000B295	DECAL - GREASE CHART	1	15’ RACK
4A		7000B709	DECAL - GREASE CHART		10’ RACK
5		700IA997	DECAL - GEARBOX POSITION	1	
6		2326940	DECAL-NOTICE TO OWNERS	1	
7		7000B300	DECAL - TEST POINT	1	
8		7000A528	DECAL-WARNING	1	DOM.
8A		700IA528	DECAL-WARNING	1	INTL.
9		7000B170	DECAL - WATERFLOW	1	
10		700IA193	DECAL-ETHER STARTING (UND)	1	
11		700IB438	DECAL - WARNING LIGHT	1	
12		7000A627	DECAL-DANGER	1	DOM.
12A		700IA627	DECAL-DANGER	1	INTL.
13		7000A393	DECAL - DANGER	1	DOM.
13A		700IA393	DECAL - DANGER	1	INTL.
14		7000A394	DECAL - WARNING	1	DOM.
14A		700IA394	DECAL - WARNING	1	INTL.
15		70000615	DECAL-MODEL NAVIGATOR (SMALL)	1	
16		70000774	DECAL 2 1/2”VERMEER STRIPE	21”	
17		70000787	DECAL 12”VERMEER LOGO	1	
18		7000B387	DECAL - DSR	1	
19		7000B172	DECAL - CONTROL	1	
20		7000B169	DECAL - CONTROL	1	
21		7000B173	DECAL - CONTROL	1	
22		700IB520	DECAL - STARTER PANEL	1	
23		7000B171	DECAL - CONTROL	1	15’ RACK
24		700IB710	DECAL - BREAKER PANEL	1	10’ RACK

https://truckmanualshub.com/

Decal Assembly - Domestic Fig 1-4r01

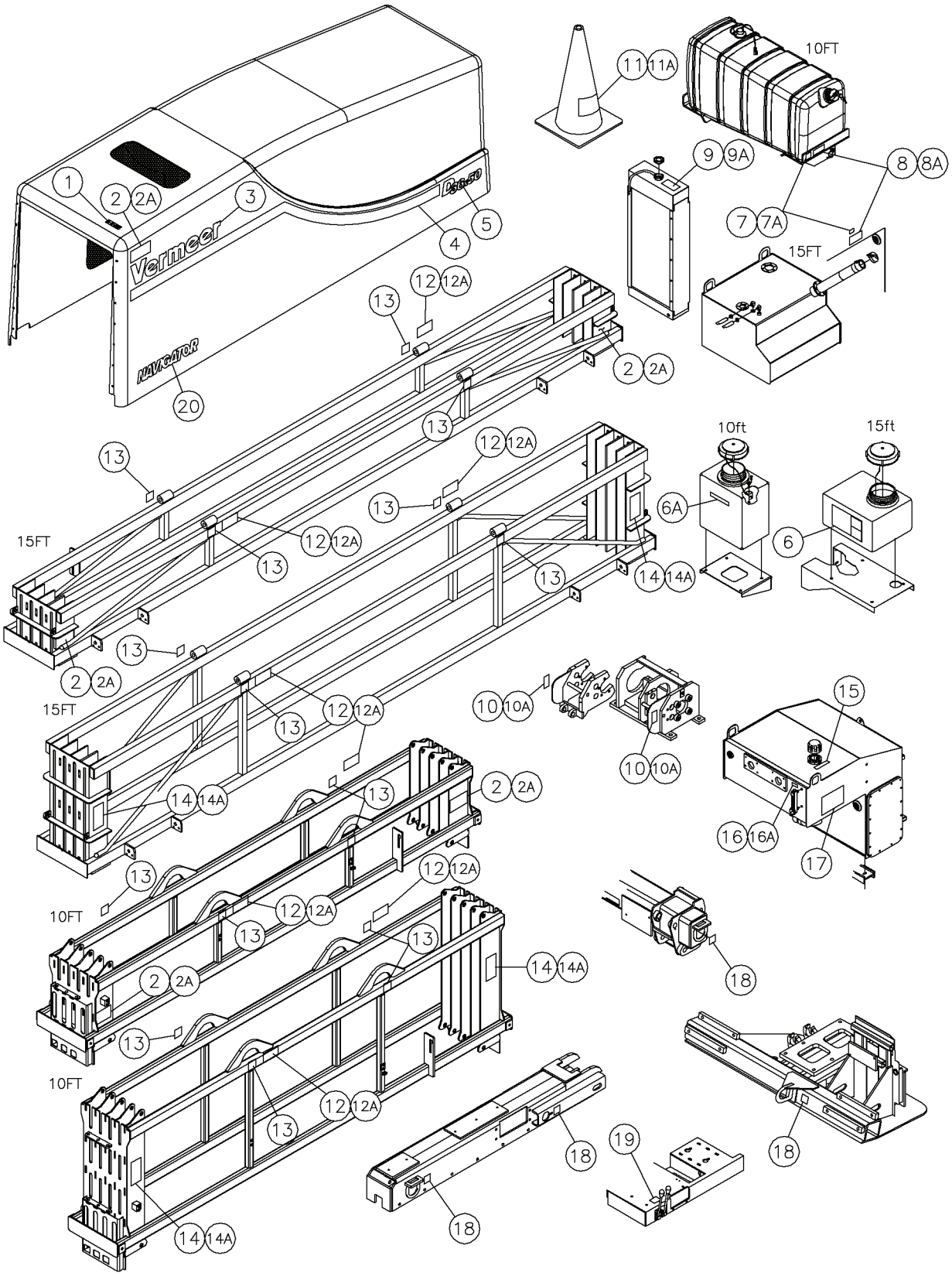

https://truckmanualshub.com/

Decal Assembly - Domestic Fig 1-4r01

REF. NO.	*	PART NO.	DESCRIPTION	QTY.	REMARKS
		Revision Date	June, 2004		Update In Illustration & Parts List.
1		7000B388	DECAL - HOOD LATCH	1	
2		7000A576	DECAL-DANGER	3	DOM.
2A		700IA576	DECAL-DANGER	3	INTL.
3		7000B059	DECAL - VERMEER 6”	1	
4		700IB179	DECAL - 3” STRIPE (HOOD)	4.00”	
5		7000C237	DECAL - MODEL 36X50	1	
6		7000A027	DECAL-NAVIGATOR FREEZE GUARD	1	15’ RACK
6A		7000B499	DECAL - ANTIFREEZE	1	10’ RACK
7		70000098	DECAL-DIESEL (AT/UND)	1	DOM.
7A		7000I098	DECAL-DIESEL FUEL	1	INTL.
8		2326324	DECAL-WARNING/REFUEL	1	DOM.
8A		2326I324	DECAL - WARING EXPLOSION	1	INTL.
9		2326315	DECAL-WARNING	1	DOM.
9A		2326I315	DECAL-WARNING	1	INTL.
10		7000A864	DECAL-WARNING DOMESTIC	2	DOM.
10A		700IA864	DECAL-WARNING INTERNATIONAL	2	INTL.
11		70000530	DECAL-DANGER	4	DOM.
11A		7000I530	DECAL-WARNING (NAVIGATORS)	4	INTL.
12		70000563	DECAL-WARNING (UND)	2	DOM.
12A		7000I563	DECAL-WARNING (UND)	2	INTL.
13		7000I445	DECAL-LIFT POINT	2	
14		7000A627	DECAL-DANGER	2	DOM.
14A		700IA627	DECAL-DANGER	2	INTL.
15		70000394	DECAL-VERMEER HY POWER	1	
16		2326756	DECAL-HYDRAULIC OIL	1	DOM.
16A		2326I756	DECAL-HYDRAULIC FLUID	1	INTL.
17		7000B294	DECAL - FLUIDS	1	
18		7000I834	DECAL - TIE DOWN POINT	6	
19		700IB354	DECAL - CONTROL TRACK	1	
20		70000614	DECAL-MODEL NAVIGATOR (BIG)	1	

https://truckmanualshub.com/

Decal Location Assembly Fig 1-4

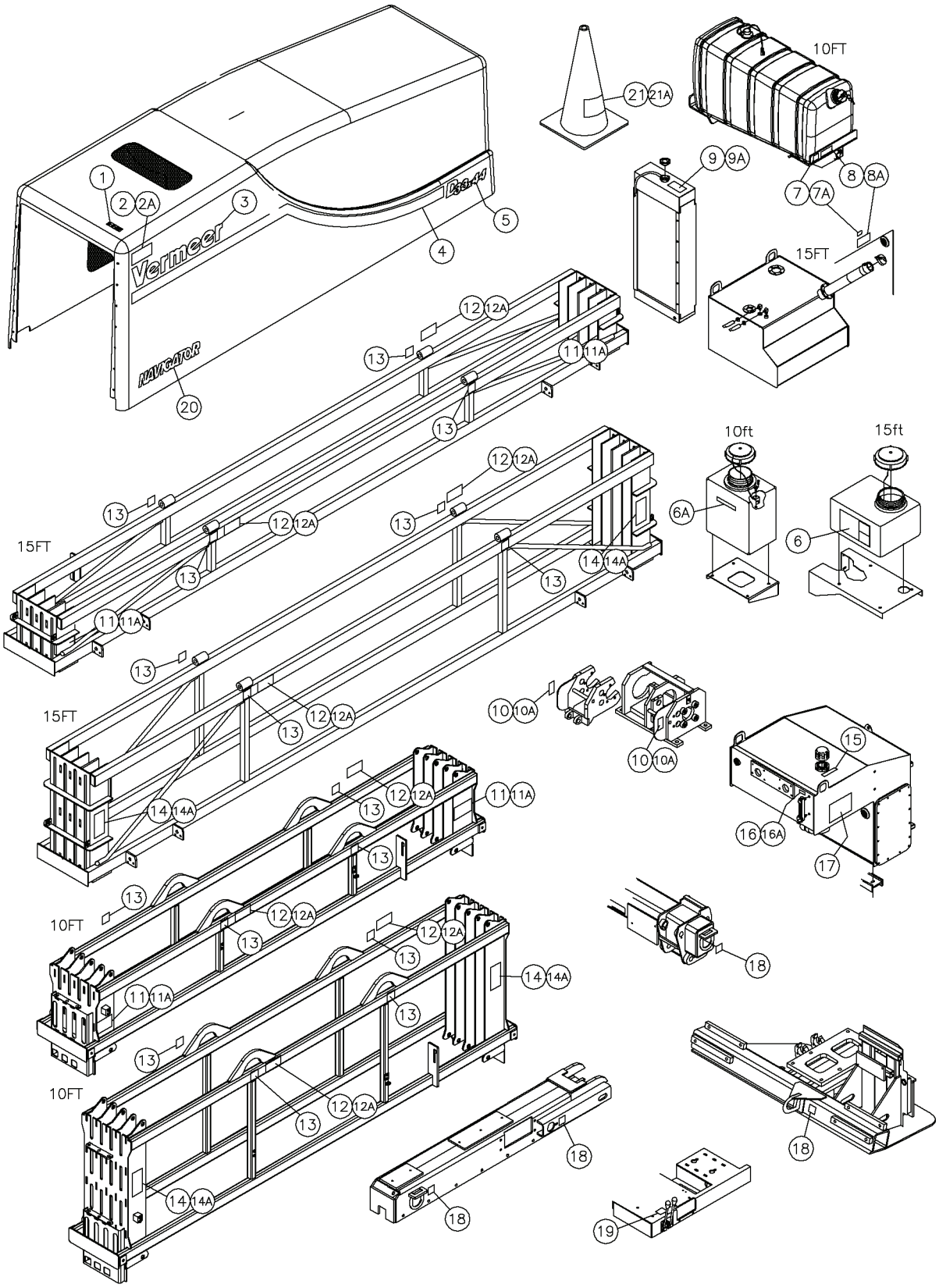

https://truckmanualshub.com/

Decal Location Assembly Fig 1-4

REF. NO.	*	PART NO.	DESCRIPTION	QTY.	REMARKS
1		7000B388	DECAL - HOOD LATCH	1	
2		7000A576	DECAL-DANGER	1	DOM.
2A		700IA576	DECAL-DANGER	1	INTL.
3		7000B059	DECAL - VERMEER 6”	1	
4		700IB179	DECAL - 3” STRIPE	4.00”	
5		7000B157	DECAL-MODEL D33X44	1	
6		7000A027	DECAL-NAVIGATOR FREEZE GUARD	1	15’ RACK
6A		7000B499	DECAL - ANTIFREEZE	1	10’ RACK
7		70000098	DECAL-DIESEL (AT/UND)	1	DOM.
7A		7000I098	DECAL-DIESEL FUEL	1	INTL.
8		2326324	DECAL-WARNING/REFUEL	1	DOM.
8A		2326I324	DECAL-WARNING	1	INTL.
9		2326315	DECAL-WARNING	1	DOM.
9A		2326I315	DECAL-WARNING	1	INTL.
10		7000A864	DECAL-WARNING DOMESTIC	2	DOM.
10A		700IA864	DECAL-WARNING INTERNATIONAL	2	INTL.
11		7000A576	DECAL-DANGER	2	DOM.
11A		700IA576	DECAL-DANGER	2	INTL.
12		70000563	DECAL-WARNING (UND)	2	DOM.
12A		7000I563	DECAL-WARNING (UND)	2	INTL.
13		7000I445	DECAL-LIFT POINT	2	
14		7000A627	DECAL-DANGER	2	DOM.
14A		700IA627	DECAL-DANGER	2	INTL.
15		70000394	DECAL-VERMEER HY POWER	1	
16		2326756	DECAL-HYDRAULIC OIL	1	DOM.
16A		2326I756	DECAL-HYDRAULIC FLUID	1	INTL.
17		7000B294	DECAL - FLUIDS	1	
18		7000I834	DECAL - TIE DOWN POINT	6	
19		700IB354	DECAL - CONTROL TRACK	1	
20		7000614	DECAL-MODEL NAVIGATOR (BIG)	1	
21		70000530	DECAL-DANGER	4	DOM.
21A		7000I530	DECAL-WARNING (NAVIGATORS)	4	INTL.

https://truckmanualshub.com/

Decal Assembly - Domestic Fig 1-5r01

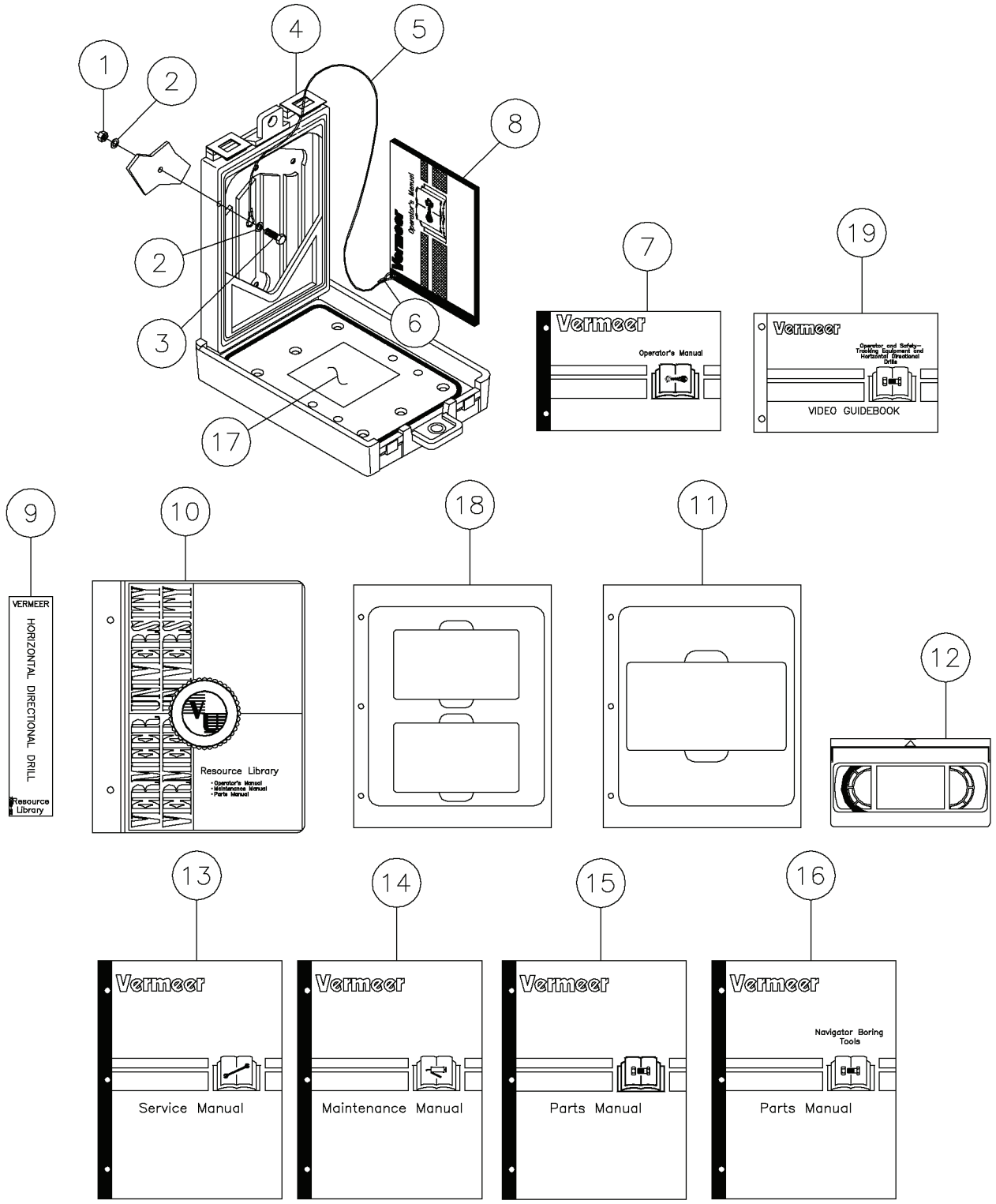

https://truckmanualshub.com/

Decal Assembly - Domestic Fig 1-5r01

REF. NO.	*	PART NO.	DESCRIPTION	QTY.	REMARKS
		Revision Date	June, 2004		Update In Illustration & Parts List.
1		248198001	NUT-1/4 - 20 GR8 TOP LOCK ZINC	3	
2		235716001	WASHER - FLATSTRL - .25 -.28 X .63 - .06 - CZ	3	
3		235733001	BOLT-1/4-20X1/2 GR8 ZINC PLTD	3	
4		142410001	CASE-6”X9 XCX X1” OPERATOR MANUAL	1	
5		142954001	CABLE-.068DIA.NYLON CT.-36.00	1	
6		142423001	CRIMP-CABLE (FOR.068DIA.CABLE)	2	
7		105400U26	OM - D33X44 (EN) o2.00	1	
8		296263811	MANUAL ASSY - D33X44 OM MINI CABLED	1	INC. REF. 5&6
9		7000B222	DECAL -HORIZONTAL DRILL - RESOURCE LIB.	1	
10		144144001	NOTEBOOK BINDER - 2”-3 XCX	1	
11		144145001	VHS - HOLDER	1	
12		251803001	VIDEO - DRILL ROD OPERATION AND MAINTENANCE	1	
		296264887	VIDEO-OPERATIONS/SAFETY HDD&TRKNG EQUIP	1	
		296264888	VIDEO - REMOTE LOCKOUT	1	
13		105400S23	SM - D33 X 44 (EN) s.1.00	1	
14		105400U28	MM - D33X44 (EN) m2.00	1	
15		105400ZAE	PM - D33 X 44 (EN) p.2.00	1	
16		105400T09	PM - NAVIGATOR BORING TOOLS p4.00	1	
17		2326940	DECAL-NOTICE TO OWNERS	1	
18		151815001	VHS HOLDER DOUBLE	1	
19		105400T90	HDD OPERATIONS & SAFETY VIDEO GUIDEBOOK	1	

https://truckmanualshub.com/

Literature Box Assembly Fig 1-5

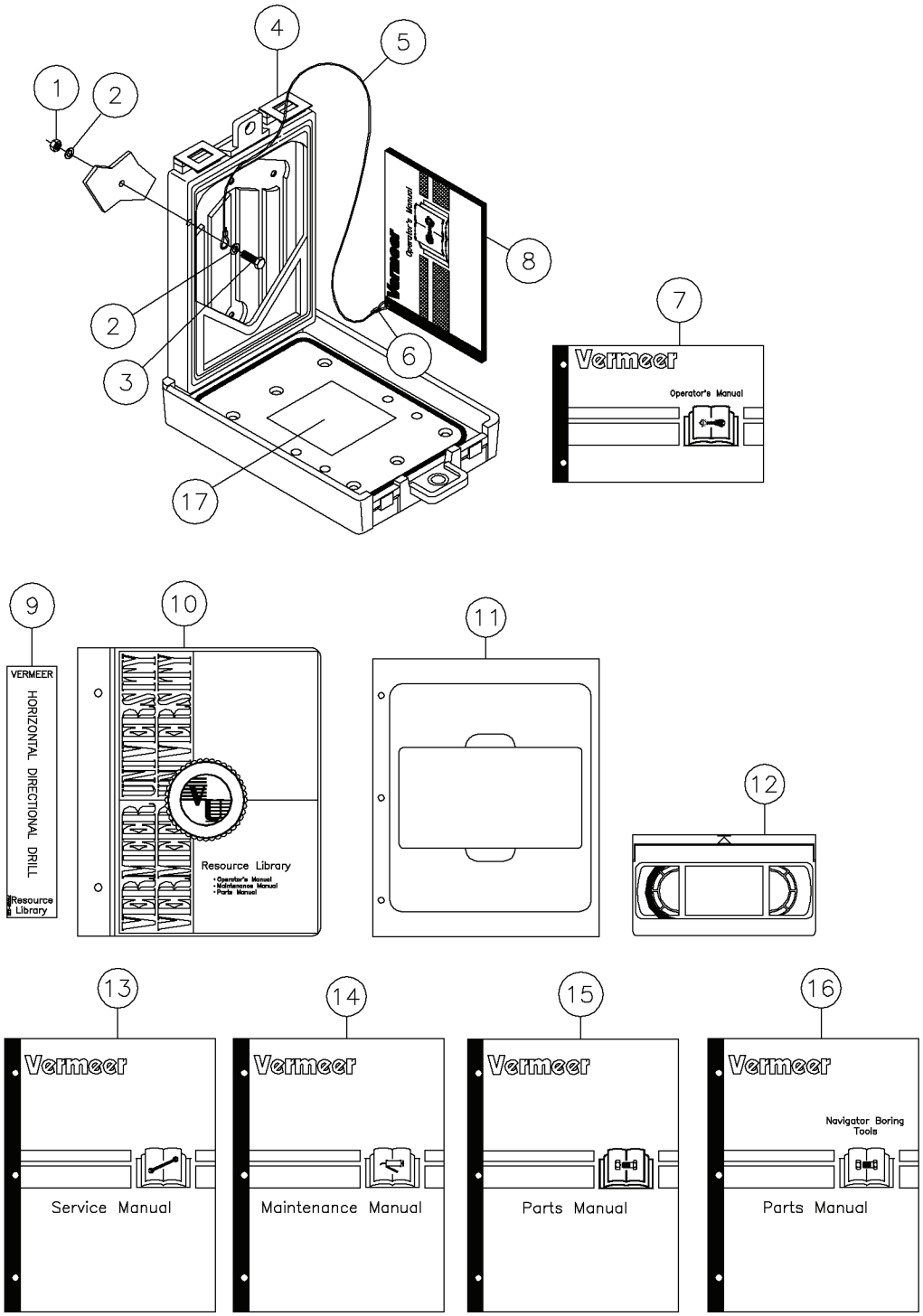

https://truckmanualshub.com/

Literature Box Assembly Fig 1-5

REF. NO.	*	PART NO.	DESCRIPTION	QTY.	REMARKS
1		248198001	NUT-1/4 - 20 GR8 TOP LOCK ZINC	3	
2		235716001	WASHER-1/4 SAE HARD ZINC PLTD	3	
3		235733001	BOLT-1/4-20X1/2 GR8 ZINC PLTD	3	
4		142410001	CASE-6”X9 XCX X1” OPERATOR MANUAL	1	
5		142954001	CABLE-.068DIA.NYLON CT.-36.00	1	
6		142423001	CRIMP-CABLE (FOR.068DIA.CABLE)	2	
7		105400S92	OM-D33X44 (EN) O2.00	1	
8		296263811	MANUAL ASSY-D33X44(O.M.)(EN)O2.00	1	INC. REF. 6&7
9		7000B222	DECAL -HORIZONTAL DRILL - RESOURCE LIB.	1	
10		144144001	NOTEBOOK BINDER - 2”-3 XCX	1	
11		144145001	VHS - HOLDER	1	
12		251803001	VIDEO - FIRESTICK DRILL STEM	1	
13		105400S23	SM-D33X44 (EN 1ST)	1	
14		105400S93	MM-D33X44 (EN) M2.00	1	
15		105400ZAE	PM - D33X44 (EN) 2ND	1	
16		105400M37	NAVIGATOR BORING TOOLS P.M.	1	
17		2326940	DECAL-NOTICE TO OWNERS	1	

https://truckmanualshub.com/

Main Frame Assembly Fig 2-1

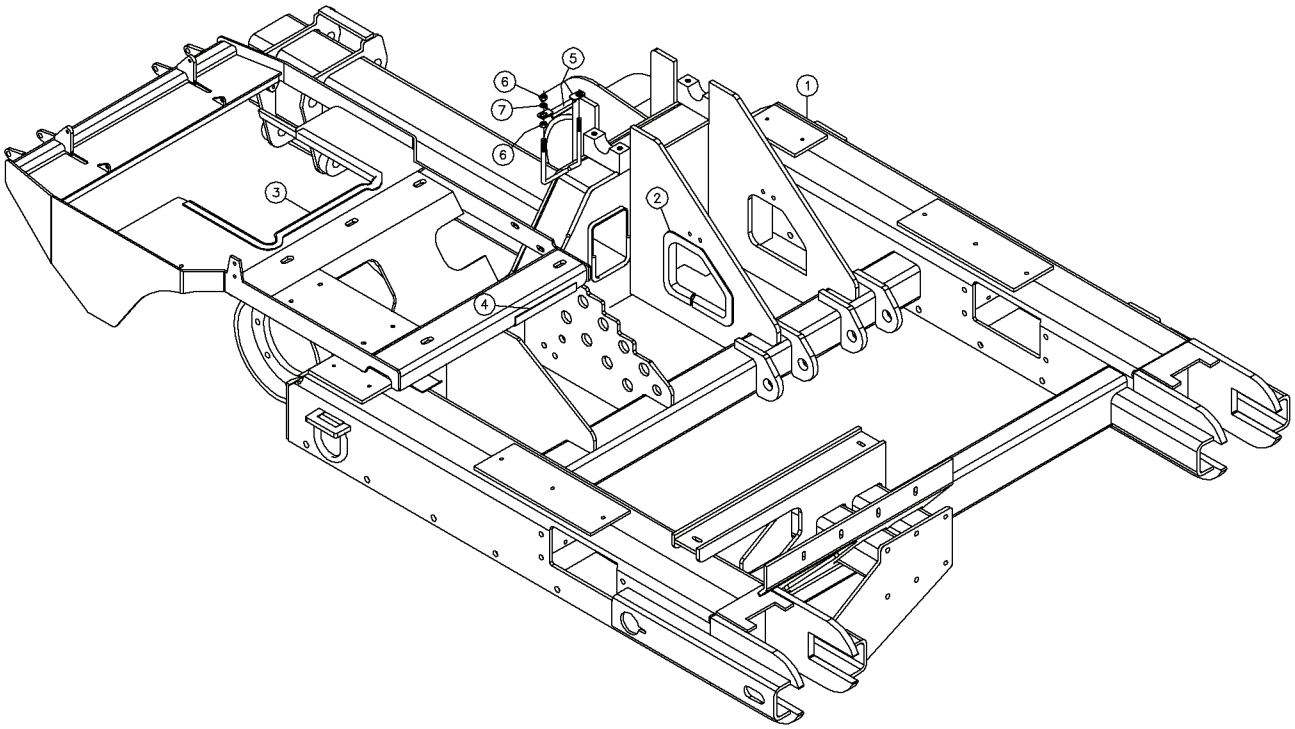

Main Frame Assembly Fig 2-1

REF. NO.	*	PART NO.	DESCRIPTION	QTY.	REMARKS
1		251148001	FRAME - UNDERCARRIAGE	1	
2		278773001	SEAL - EDGE 3/8” STYLE	A/R	SPECIFY LENGTH
3		279062001	SEAL - BULB EDGE 1/4” STYLE	A/R	SPECIFY LENGTH
4		278774001	SEAL - EDGE 1/2” STYLE	A/R	SPECIFY LENGTH
5		285532001	ROD - HOSE LOOP COVER	1	
6		235731001	NUT-1/2-13 GR8 ZINC PLTD	4	
7		485025	WASHER-1/2 FLAT-HARDENED-ZINC	2	

https://truckmanualshub.com/

Rack Frame Assembly (10' Rack) Fig 2-2r01

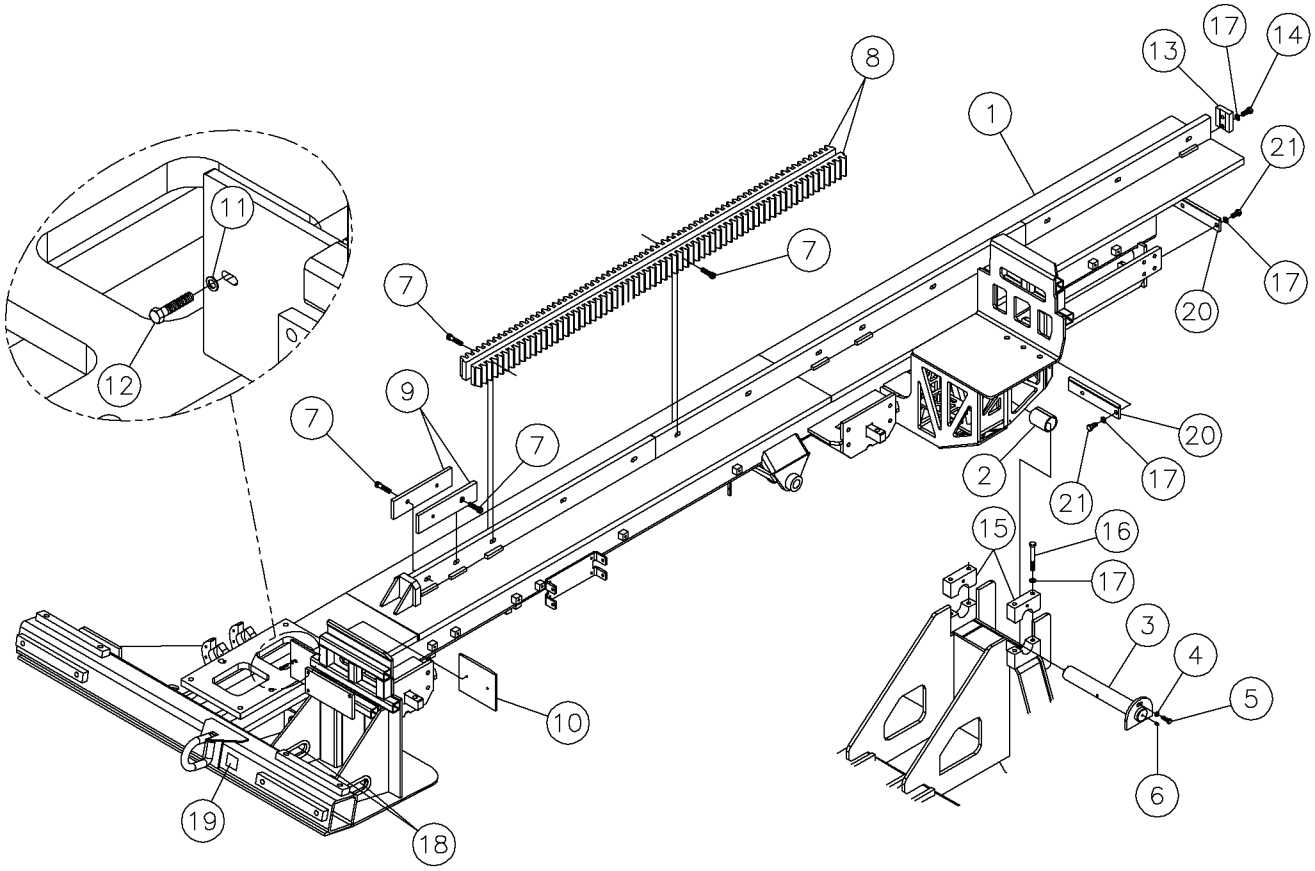

https://truckmanualshub.com/

Rack Frame Assembly (10' Rack) Fig 2-2r01

REF. NO.	*	PART NO.	DESCRIPTION	QTY.	REMARKS
		Revision Date	June, 2004		Update In Illustration & Parts List.
1		296256039	WELDMENT - RACK - 10FT - D33X44	1	
2		276336001	BSHNG-2 3/8ODX2.00ID-3.00 CNNX	2	
3		279159001	PIN - RACK PIVOT	1	
4		235713001	WASHER - FLATSTRL - .38 - .41 X .81 - .06-YA-A325	1	
5		235736001	BOLT-3/8-16X1 1/4 ZINC PLTD	1	
6		598001	FITTING-1/4” NF ST GREASE ZERK	1	
7		229144001	CAPSCREW- 1/2-13 X 1 3/4SOC.HD	14	
8		276318001	RACK - SIDE	2	
9		294528001	BAR - RACK SPACER	2	
10		296256053	PLATE - ROD GUARD - MACHINE	1	
11		235716001	WASHER - FLATSTRL - .25 -.28 X .63 - .06 - CZ	2	
12		235734001	BOLT-1/4-20X3/4 GR8 ZINC PLTD	2	
13		277132001	CAP - RACK END	1	
14		235721001	BOLT-1/2-13X1 1/2 GR8 ZINC PLT	2	
15		279156001	BLOCK - PIVOT MOUNT TOP	2	
16		238244001	BOLT 1/2”-13 X 4”GR8 HEX Y/ZIN	4	
17		485025	WASHER-1/2 FLAT-HARDENED-YZ	10	
18		278774001	SEAL - EDGE 1/2” STYLE	A/R	
19		7000I834	DECAL - TIE DOWN POINT	1	
20		296256167	WELDMENT - HOSE HOLDER	2	
21		235729001	SCREW-HCS-.50-13X1.00-GR8-YZ	4	

https://truckmanualshub.com/

Rack Frame Assembly (10' Rack) Fig 2-2

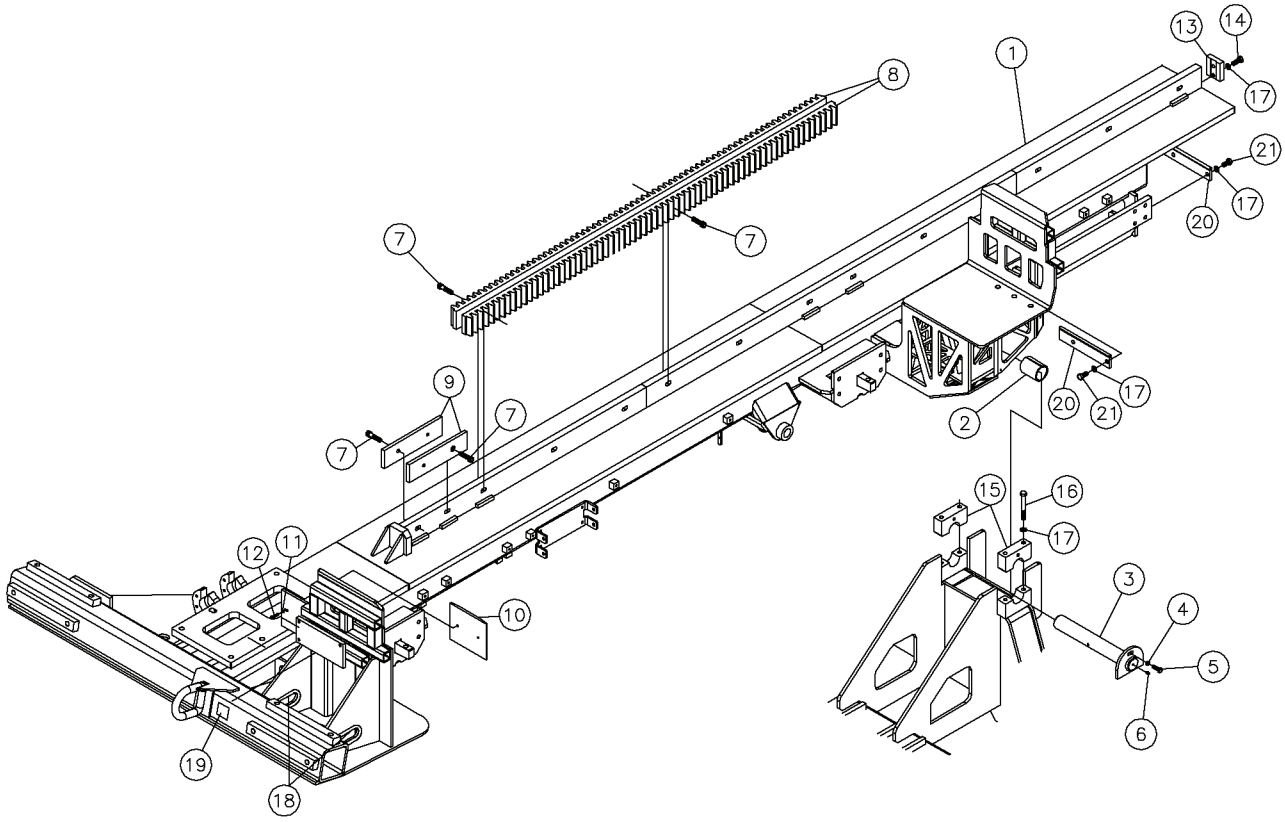

https://truckmanualshub.com/

Rack Frame Assembly (10' Rack) Fig 2-2

REF. NO.	*	PART NO.	DESCRIPTION	QTY.	REMARKS
1		296256039	WELDMENT - RACK - 10FT - D33X44	1	
2		276336001	BSHNG-2 3/8ODX2.00ID-3.00 CNNX	2	
3		279159001	PIN - RACK PIVOT	1	
4		235713001	WASHER-3/8 SAE HARD ZINC PLTD	1	
5		235736001	BOLT-3/8-16X1 1/4 ZINC PLTD	1	
6		5981001	BRACKET-MOUNTING	1	
7		229144001	CAPSCREW- 1/2-13 X 1 3/4SOC.HD	14	
8		276318001	RACK - SIDE	2	
9		294528001	BAR - RACK SPACER	2	
10		296256053	PLATE - ROD GUARD - MACHINE	1	
11		235716001	WASHER-1/4 SAE HARD ZINC PLTD	2	
12		235734001	BOLT-1/4-20X3/4 GR8 ZINC PLTD	2	
13		277132001	CAP - RACK END	1	
14		235721001	BOLT-1/2-13X1 1/2 GR8 ZINC PLT	2	
15		279156001	BLOCK - PIVOT MOUNT TOP	2	
16		238244001	BOLT 1/2”-13 X 4”GR8 HEX Y/ZIN	4	
17		485025	WASHER-1/2 FLAT-HARDENED-ZINC	10	
18		278774001	SEAL - EDGE 1/2” STYLE	A/R	
19		7000I834	DECAL - TIE DOWN POINT	1	
20		296256167	WELDMENT - HOSE HOLDER	2	
21		235729001	SCREW-HCS-.50-13X1.00-GR8-YZ	4	

https://truckmanualshub.com/

Rack Frame Assembly (15' Rack) Fig 2-3

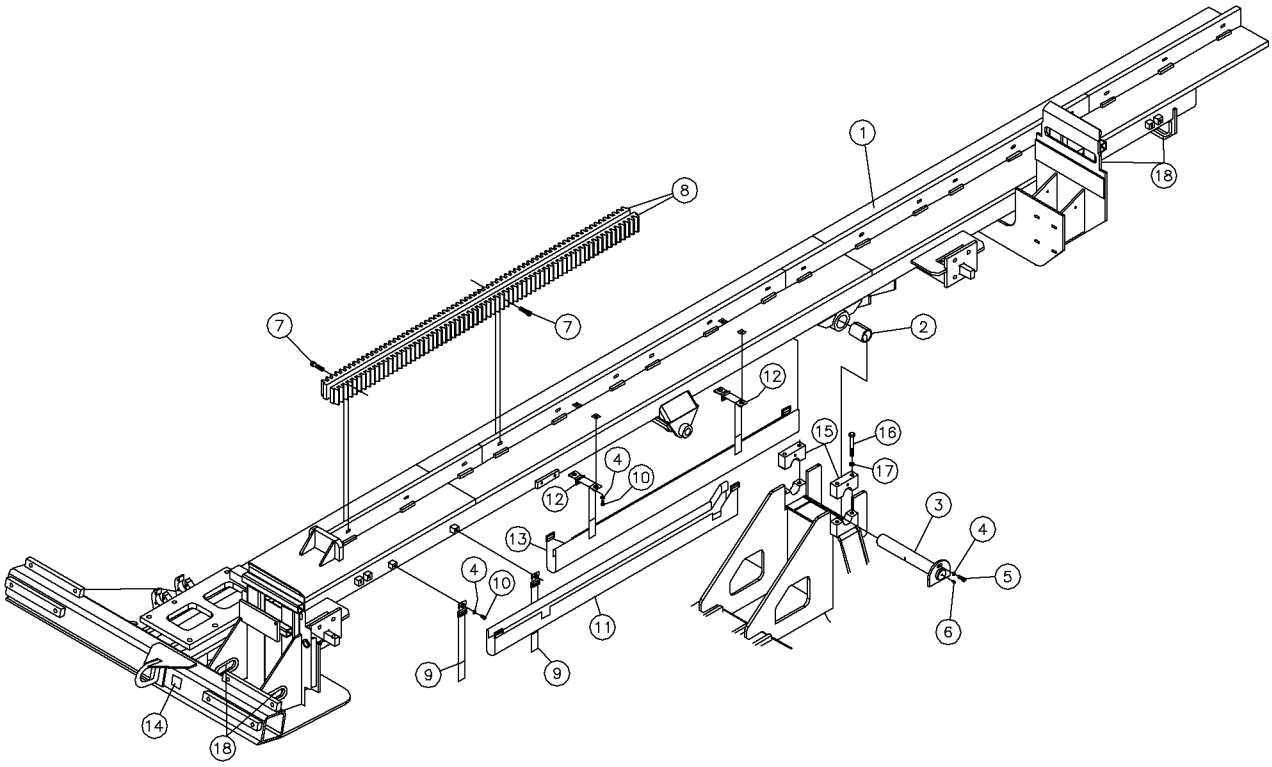

https://truckmanualshub.com/

Rack Frame Assembly (15' Rack) Fig 2-3

REF. NO.	*	PART NO.	DESCRIPTION	QTY.	REMARKS
1		277232001	RACK - D33X44	1	
2		276336001	BSHNG-2 3/8ODX2.00ID-3.00 CNNX	2	
3		279159001	PIN - RACK PIVOT	1	
4		235713001	WASHER-3/8 SAE HARD ZINC PLTD	7	
5		235727001	BOLT-3/8-16X1 GR8 HEX ZINC PLT	1	
6		598001	ZERK-1/4” NF ST GREASE	1	
7		229144001	CAPSCREW- 1/2-13 X 1 3/4SOC.HD	18	
8		276318001	RACK - SIDE	6	
9		278901001	STRAP - HOSE SLEEVE HANGER	2	
10		235742001	BOLT-5/16-18X3/4 GR8 ZINC PLTD	6	
11		278896001	SLEEVE - FRONT RACK HOSE	1	
12		278902001	STRAP - DOUBLE SLEEVE HANGER	2	
13		278897001	SLEEVE - REAR RACK HOSE	1	
14		7000I834	DECAL - TIE DOWN POINT	1	
15		279156001	BLOCK - PIVOT MOUNT TOP	2	
16		238244001	BOLT 1/2”-13 X 4”GR8 HEX Y/ZIN	4	
17		485025	WASHER-1/2 FLAT-HARDENED-ZINC	4	
18		278774001	SEAL - EDGE 1/2” STYLE	A/R	SPECIFY LENGTH

https://truckmanualshub.com/

Track, Chain, Roller, and Tightener Assembly Fig 2-4r01

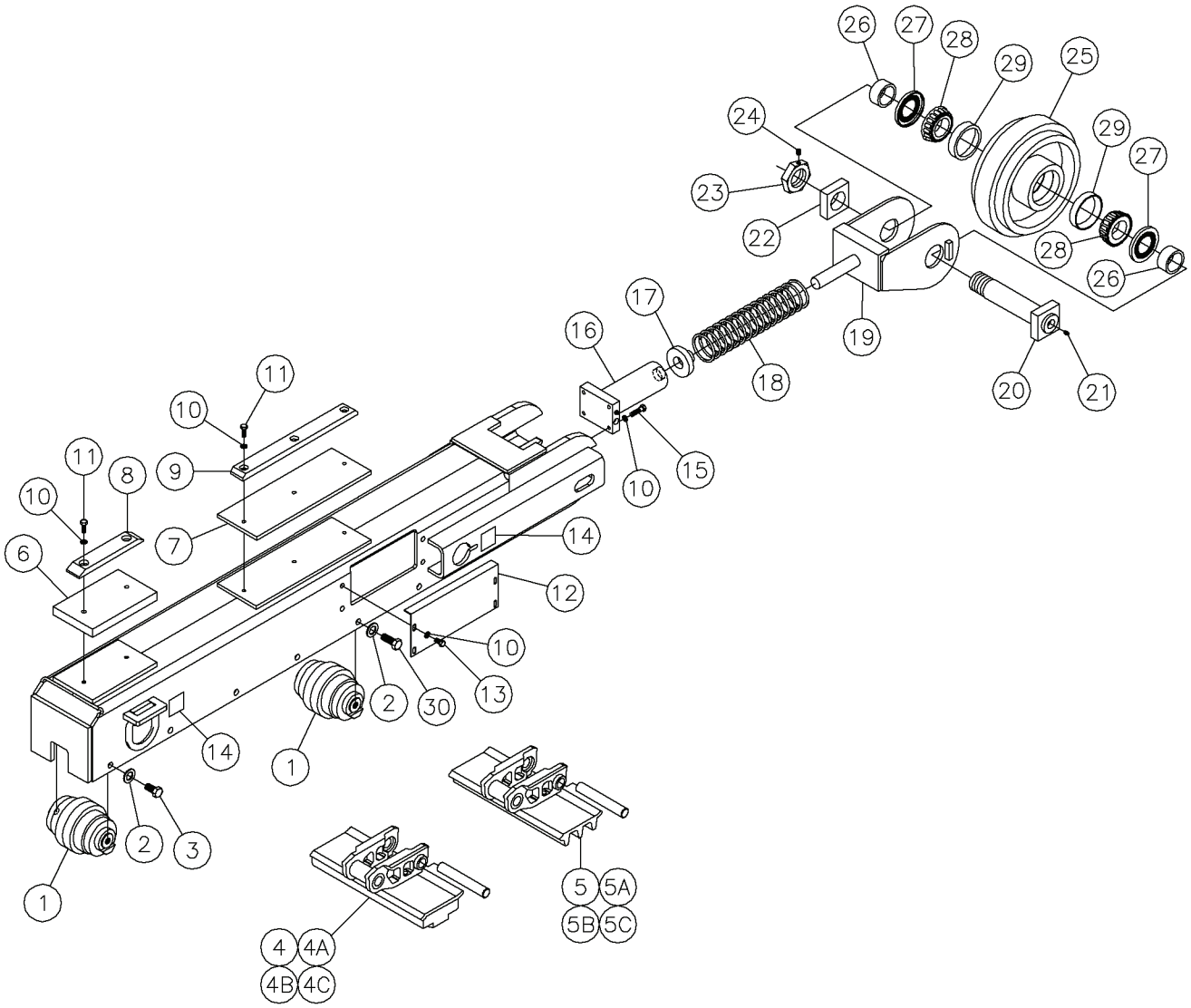

https://truckmanualshub.com/

Track, Chain, Roller, and Tightener Assembly Fig 2-4r01

REF. NO.	*	PART NO.	DESCRIPTION	QTY.	REMARKS
1		251099001	ROLLER - LOWER TRACK	14	
2		250533001	REPLACED BY 603946001	28	
3		251100001	BOLT-M16X2.0X30 GR10.9 HEX YZN	20	
4		251102001	TRACK - 36 SECTION RUBBER	2	
4A		230841001	RUBBER TRACK-25MMX400M CHAIN	36	
4B		230840005	PIN-MASTER	1	
4C		230840007	PIN-TRACK	35	
5		251103001	TRACK - 36 SECTION STEEL	2	
5A		230840003	SECTION-TRACK (STEEL)	36	
5B		230840005	PIN-MASTER	1	
5C		230840007	PIN-TRACK	35	
6		285778001	BAR - LOWER TRACK WEAR	2	
7		244456001	BAR - LOWER TRACK WEAR	2	
8		285777001	BAR - UPPER TRACK WEAR	2	
9		244455001	BAR -UPPER TRACK WEAR	2	
10		235713001	WASHER - FLATSTRL - .38 - .41 X .81 - .06-YA-A325	30	
11		235727001	BOLT-3/8-16X1 GR8 HEX ZINC PLT	10	
12		251440001	PLATE-CYLINDER COVER	3	
13		235726001	BOLT-3/8-16X3/4 GR8 HEX ZNCPLT	12	
14		7000I834	DECAL - TIE DOWN POINT	4	
15		235723001	SCREW - HCS -.38 - 16 X 1.50 - GR8 - YZ	8	
16		251097001	CYLINDER - 2.50 X 4.50 GREASE	2	BREAKDOWN FIG. 14-33
17		251432001	CAP-ROD	2	
18		251101001	SPRING-3.0 OD X25/32W X 13 1/2	2	
19		251445001	BOX-TRACK END ROLLER	2	
20		251129003	PIN-ASSEMBLY-FRONT IDLER	2	INC. REF. 21
21		598001	FITTING-1/4” NF ST GREASE ZERK	2	
22		251423001	BLOCK-IDLER ROLLER BOLT	2	
23		251131003	NUT ASSEMBLY-FRONT IDLER	2	INC. REF. 24
24		530001	SSS-3/8-16X1/2	2	
25		251203003	ROLLER ASSEMBLY-FRONT TRACK	2	INC. REF. 29
26		280532001	SPACER-IDLER ROLLER	4	
27		3967001	SEAL -#25091 C/R	4	
28		1716011	TIMKEN CONE 2” #3775	4	
29		1715011	TIMKEN CUP 2” #3730	4	
30		508478040	SCREW-HCS,M16-2.00X40,10.9,YZ,ISO4017,FT	8	

https://truckmanualshub.com/

Track, Chain, Roller, and Tightener Assembly Fig 2-4

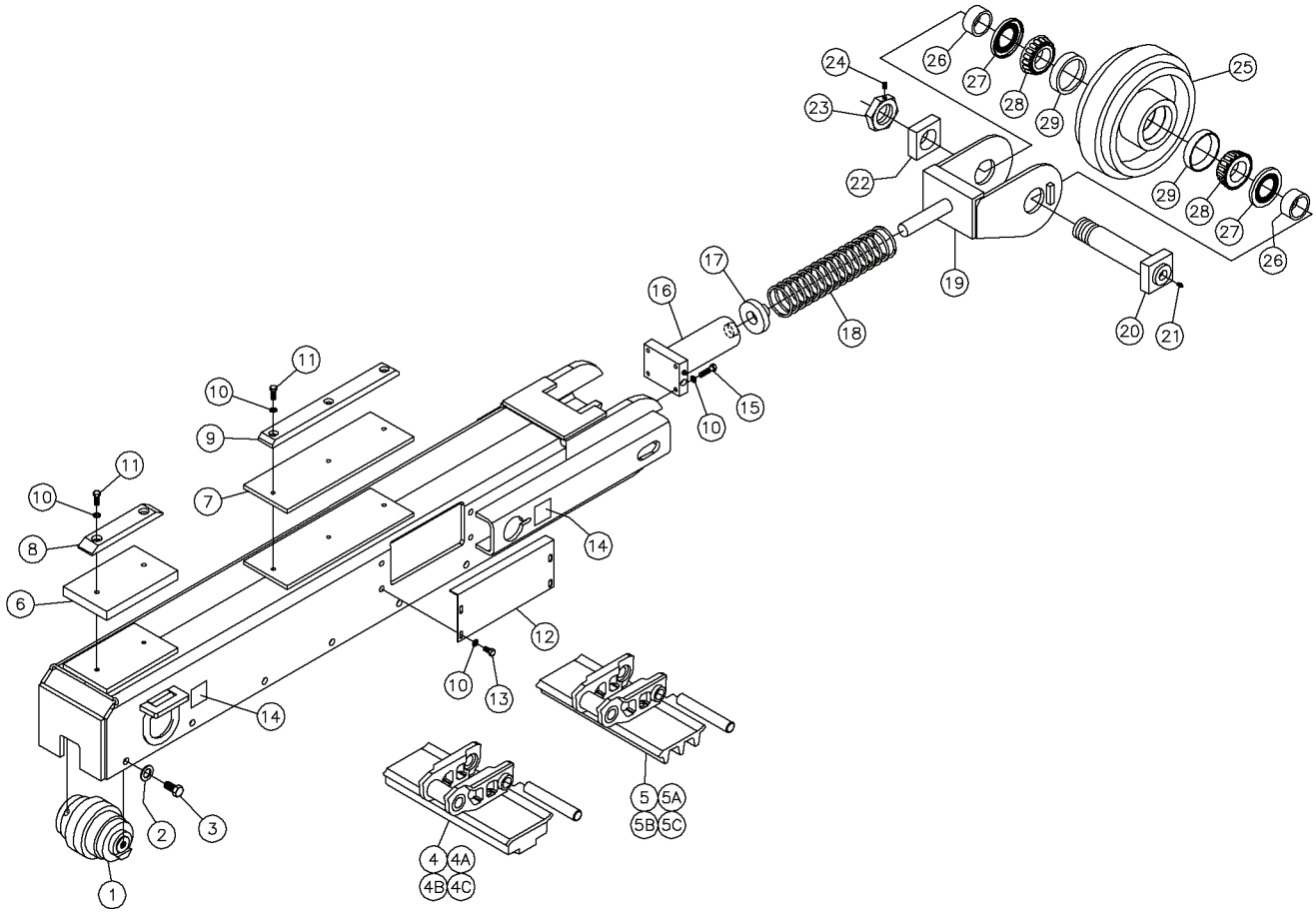

Track, Chain, Roller, and Tightener Assembly Fig 2-4

REF. NO.	*	PART NO.	DESCRIPTION	QTY.	REMARKS
1		251099001	ROLLER - LOWER TRACK	14	
2		250533001	REPLACED BY 603946001	28	
3		251100001	BOLT-M16X2.0X30 GR10.9 HEX YZN	28	
4		251102001	TRACK - 36 SECTION RUBBER	2	
4A		230841001	RUBBER TRACK-25MMX400M CHAIN	36	
4B		230840005	PIN-MASTER	1	
4C		230840007	PIN-TRACK	35	
5		251103001	TRACK - 36 SECTION STEEL	2	
5A		230840003	SECTION-TRACK (STEEL)	36	
5B		230840005	PIN-MASTER	1	
5C		230840007	PIN-TRACK	35	
6		285778001	BAR - LOWER TRACK WEAR	2	
7		244456001	BAR - LOWER TRACK WEAR	2	
8		285777001	BAR - UPPER TRACK WEAR	2	
9		244455001	BAR -UPPER TRACK WEAR	2	
10		235713001	WASHER-3/8 SAE HARD ZINC PLTD	30	
11		235727001	BOLT-3/8-16X1 GR8 HEX ZINC PLT	10	
12		251440001	PLATE-CYLINDER COVER	3	
13		235726001	BOLT-3/8-16X3/4 GR8 HEX ZNCPLT	12	
14		7000I834	DECAL - TIE DOWN POINT	4	
15		235723001	BOLT-3/8-16X1 1/2 GR8 ZINC PLT	8	
16		251097001	CYLINDER - 2.50 X 4.50 GREASE	2	BREAKDOWN FIG. 14-33
17		251432001	CAP-ROD	2	
18		251101001	SPRING-3.0 OD X25/32W X 13 1/2	2	
19		251445001	BOX-TRACK END ROLLER	2	
20		251129003	PIN-ASSEMBLY-FRONT IDLER	2	INC. REF. 21
21		598001	ZERK-1/4” NF ST GREASE	2	
22		251423001	BLOCK-IDLER ROLLER BOLT	2	
23		251131003	NUT ASSEMBLY-FRONT IDLER	2	INC. REF. 24
24		530001	SSS-3/8-16X1/2	2	
25		251203003	ROLLER ASSEMBLY-FRONT TRACK	2	INC. REF. 29
26		280532001	SPACER-IDLER ROLLER	4	
27		3967001	SEAL -#25091 C/R	4	
28		1716011	TIMKEN CONE 2” #3775	4	
29		1715011	TIMKEN CUP 2” #3730	4	

https://truckmanualshub.com/

Track Planetary Assembly Fig 2-5

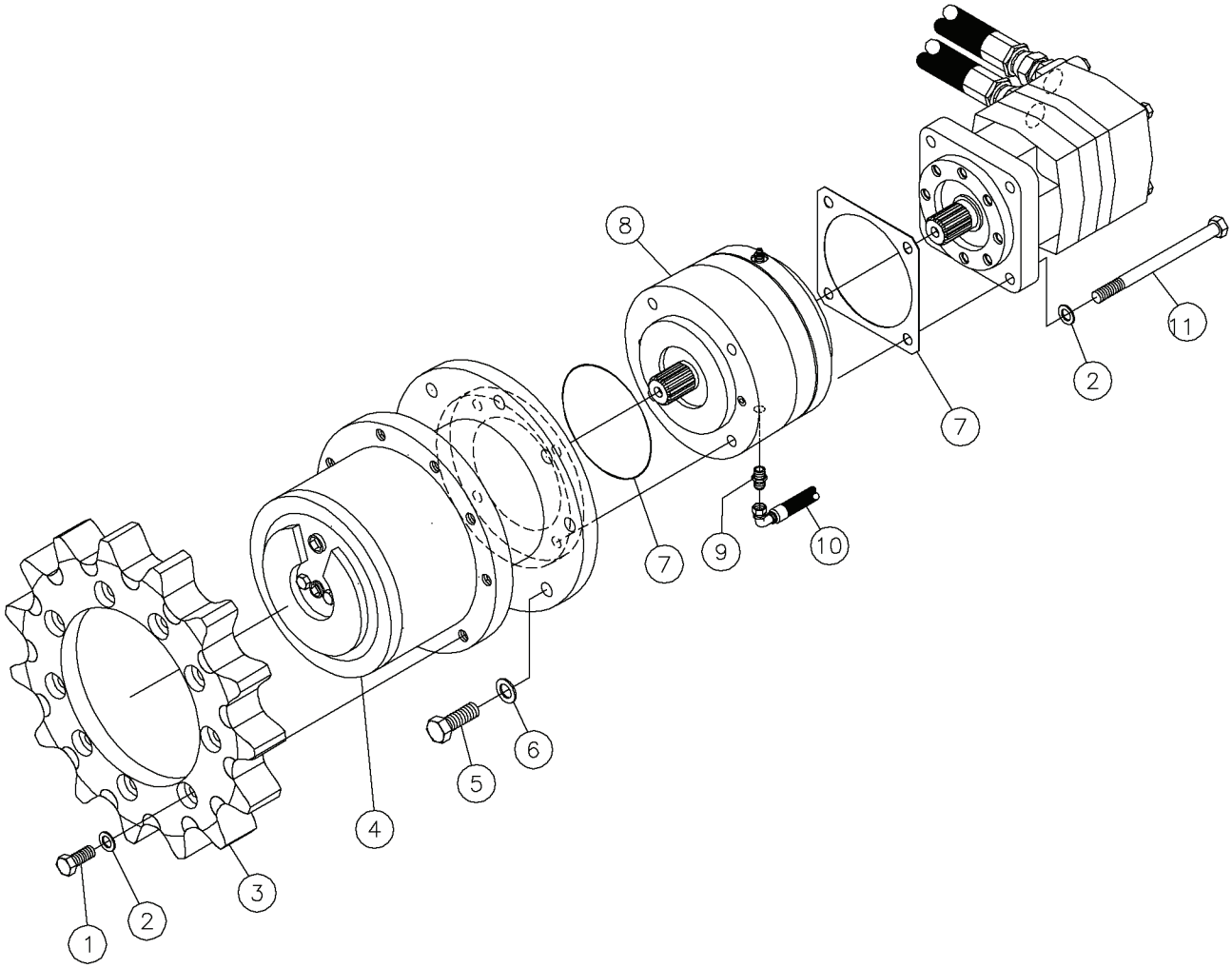

https://truckmanualshub.com/

Track Planetary Assembly Fig 2-5

REF. NO.	*	PART NO.	DESCRIPTION	QTY.	REMARKS
1		508347001	BOLT-1/2 X 20-1 1/4 GR8 HE ZY	18	
2		485025	WASHER-1/2 FLAT-HARDENED-ZINC	26	
3		244467001	SPROCKET - 15T TRACK DRIVE	2	
4		244405001	GEARBOX - PLANETARY 7WC14150ZX	2	BREAKDOWN FIG. 14-10
5		238220001	BOLT-5/8-11X1 3/4 Gr 8 HEX YZC - 230728001 replace	16	
6		235715001	WASHER-5/8 SAE HARD ZINC PLTD	16	
7		278785003	O-RING & BACK UP RING KIT	2	
8		278785001	BRAKE-TRACK DRIVE PARK	2	BREAKDOWN FIG. 14-11
9		60908001	FITTING-4MX4M JIC STR ADAPTER	2	
10		279144001	HOSE - 1/4” X 50” 4FSJIC ST/90 M3K	1	
11		251046001	BOLT-1/2-13X6 3/4 GR8 HEX ZINC	8	

https://truckmanualshub.com/

Rotation Gearbox/Carriage Assembly Fig 2-6r01

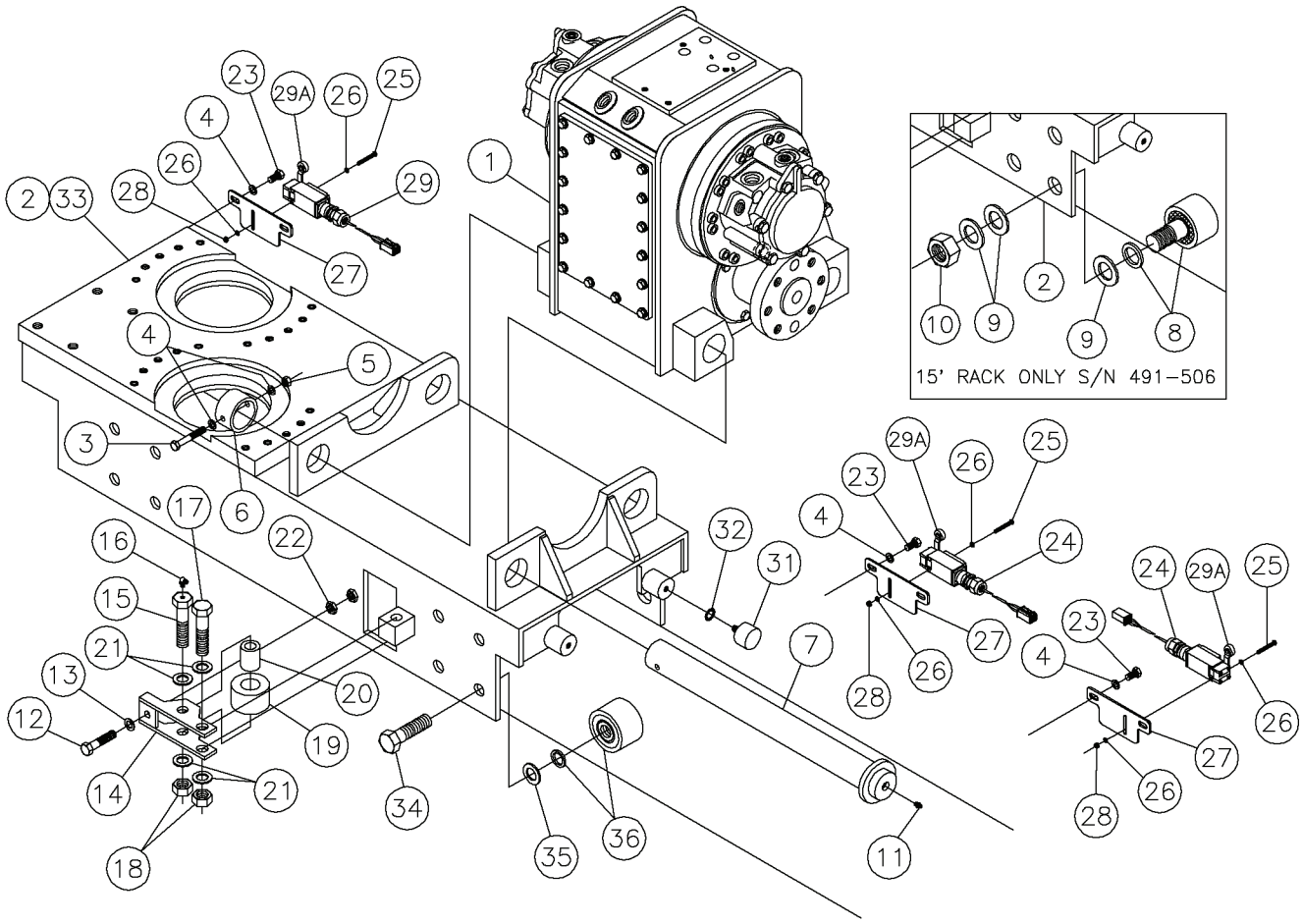

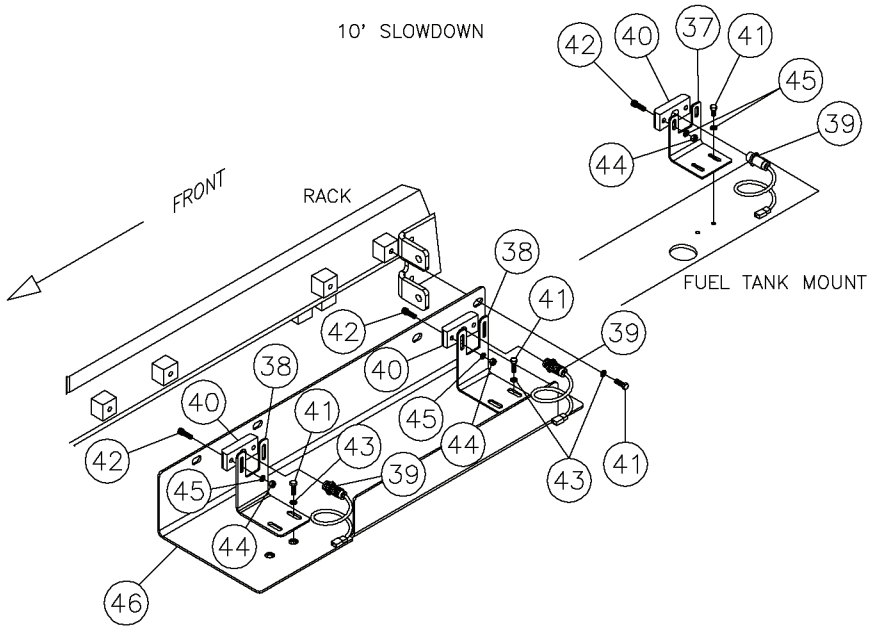

Rotation Gearbox/Carriage Assembly Fig 2-6r01

REF. NO.	*	PART NO.	DESCRIPTION	QTY.	REMARKS
		Revision Date	June, 2004		Update In Illustration & Parts List.
1		276362001	GEARBOX ROTATION ASSY	1	(BREAKDOWN FIG 14-1)
2		277071001	CARRIAGE - GEARBOX	1	15’ RACK(S/N 491-506)
3		16114034	BOLT-3/8-16X3 1/2 HEX HD. GR8	2	
4		235713001	WASHER-FLAT-.38-.41 X .81 - .06-YA-A325	10	
5		235725001	NUT - HEX - .38 - 16 - GR8 - YZ	2	
6		276361001	CAP - FLOATING HEAD	2	
7		276292003	PIN ASSEMBLY- FLOATING HEAD	2	
8		276257001	ROLLER-3.00 ODX 1 1/4STUD NF12	16	15’ RACK(S/N 491-506)
9		238891001	WASHER-1 1/4 HARDENED FLAT ZY	48	15’ RACK(S/N 491-506)
10		276475001	NUT - 1 - 1/4 - 12 HEX GR8 Y-ZINC	16	15’ RACK(S/N 491-506)
11		598001	FITTING-1/4” NF ST GREASE ZERK	2	
12		240335001	BOLT-1/2-13X2 1/4 GR8 ZINC PLT	2	
13		485025	WASHER-1/2 FLAT-HARDENED-YZ	2	
14		278875001	BRACKET - SIDE ROLLER	2	
15		235915003	BOLT ASSEMBLY-GREASE	2	
16		597001	ZERK-1/4” NF 90 DEG GREASE	2	
17		250604001	BOLT-3/4-10X3 1/4 GR8 HX Y/ZNC	2	
18		235739001	NUT-3/4-10 GR8 ZINC PLTD	4	
19		244679001	ROLLER-GUIDE	2	
20		244678001	BUSHING GUIDE ROLLER	2	
21		235717001	WASHER-3/4 FLAT HARDENED YELLOW ZINC	8	
22		75383001	NUT-1/2-UNC GR.8 JAM HEX	2	
23		235726001	BOLT-3/8-16X3/4 GR8 HEX ZNCPLT	6	15’ RACK ONLY
24		276467001	SWITCH - LIMIT NO/NC LEVER/ROLLER	2	15’ RACK ONLY
25		144654001	SCREW-#8-32 X 1 1/2 STOVE	8	15’ RACK ONLY
26		224769001	WASHER-#8 FLAT	14	15’ RACK ONLY
27		281802001	PLATE - SWITCH MOUNT	3	15’ RACK ONLY
28		399001	NUT-8-32 HEX	8	15’ RACK ONLY
29		276448001	SWITCH - LIMIT NO/NC	1	15’ RACK ONLY
29A		285735001	LEVER - LIMIT SWITCH OFFSET W/ INSIDE ROLLER	3	15’ RACK ONLY
30		905001001	BOLT-8-32 X 2 STOVE	2	
31		122474001	MOUNT-SANDWICH SINGLE STUD	2	
32		481001	WASHER-5/16 EXT STAR	2	
33		296271260	WELDMENT - GEARBOX CARRIAGE	1	10’ RACK,15’ RACK S/N 507-
34		401060001	BOLT 7/8” X 2.5” UNF GRD 8	16	10’ RACK,15’ RACK S/N 507-
35		288459001	WASHER - 7/8 FLAT HARD ZINC PLATED	16	10’ RACK,15’ RACK S/N 507-
36		296256062	ROLLER - 3.00 OD X 7/8 - 14 UNF INT THD	16	10’ RACK,15’ RACK S/N 507-
37		291656001	MOUNT - PROXY SWITCH	1	10’ RACK ONLY
38		291654001	MOUNT - PROXY SWITCH	2	10’ RACK ONLY
39		276442001	SWITCH - PROX 18 MM NO	3	10’ RACK ONLY
40		291655001	MOUNT - PROXY SWITCH	3	10’ RACK ONLY
41		235742001	BOLT-5/16-18X3/4 GR8 ZINC PLTD	8	10’ RACK ONLY
42		5544006	CAPSCREW-1/4-20X3/4 SOCKET HD.	6	10’ RACK ONLY
43		235714001	WASHER-FLAT-.31-.34 X .69 - .06-YZ-A325	8	10’ RACK ONLY
44		248198001	NUT-1/4 - 20 GR8 TOP LOCK ZINC	6	10’ RACK ONLY
45		235716001	WASHER-FLATSTRL-.25-.28X.63 - .06 - CZ	8	10’ RACK ONLY
46		291698001	WELDMENT - FRONT HOSE SHIELD	1	10’ RACK ONLY

https://truckmanualshub.com/

Rotation Gearbox/Carriage Assembly Fig 2-6

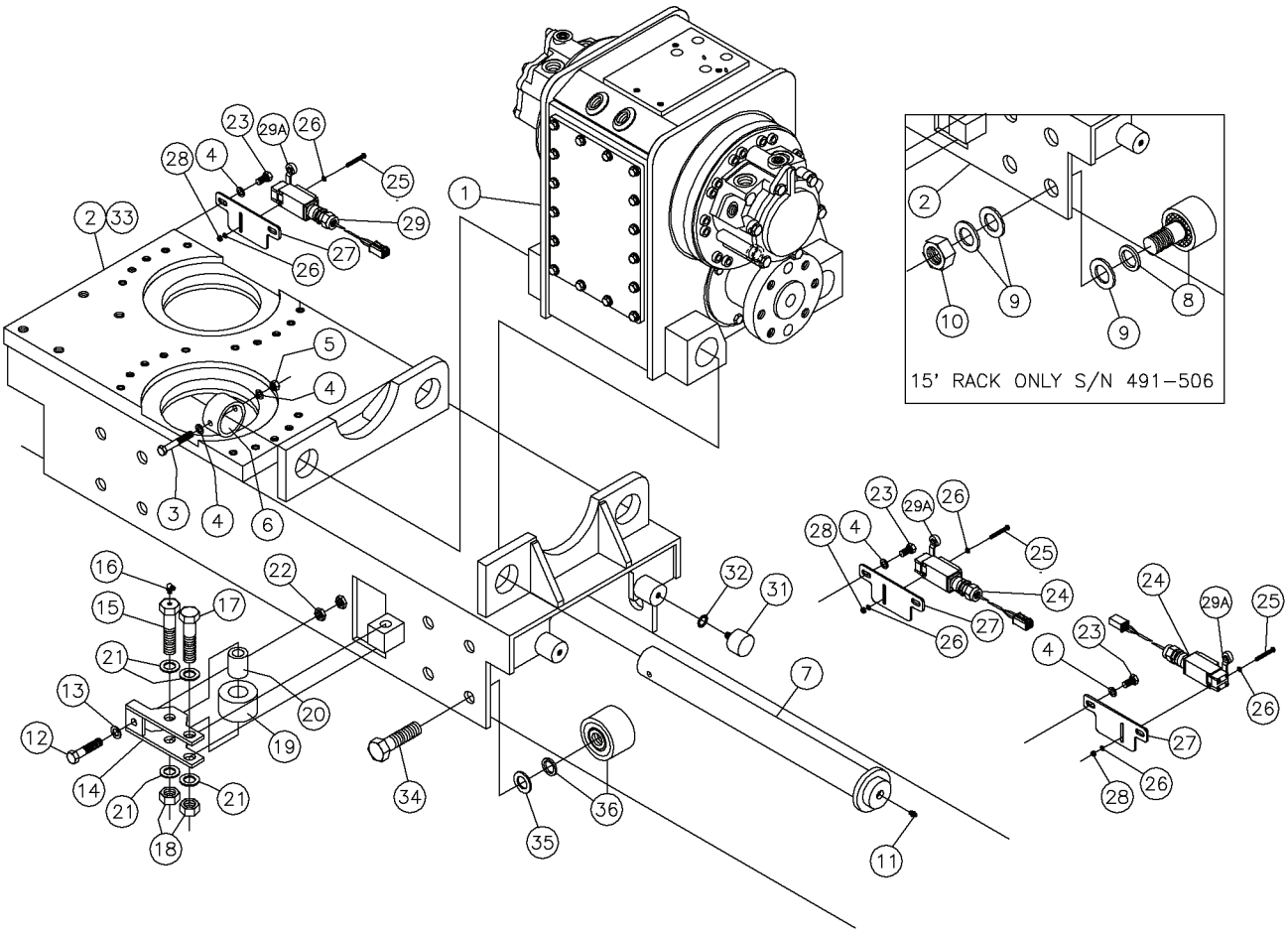

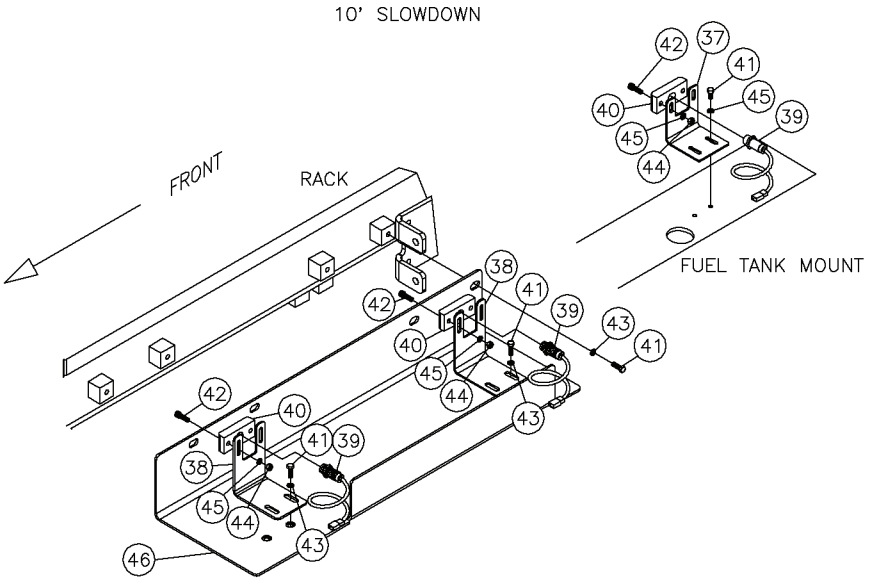

Rotation Gearbox/Carriage Assembly Fig 2-6

REF. NO.	*	PART NO.	DESCRIPTION	QTY.	REMARKS
1		276362001	GEARBOX ROTATION ASSY	1	(BREAKDOWN FIG 14-1)
2		277071001	CARRIAGE - GEARBOX	1	15’ RACK(S/N 491-506)
3		16114034	BOLT-3/8-16X3 1/2 HEX HD. GR8	2	
4		235713001	WASHER-3/8 SAE HARD ZINC PLTD	10	
5		235725001	NUT-3/8-16 GR8 ZINC PLTD	2	
6		276361001	CAP - FLOATING HEAD	2	
7		276292003	PIN ASSEMBLY- FLOATING HEAD	2	
8		276257001	ROLLER-3.00 ODX 1 1/4STUD NF12	16	15’ RACK(S/N 491-506)
9		238891001	WASHER-1 1/4 HARDENED FLAT ZY	48	15’ RACK(S/N 491-506)
10		276475001	NUT - 1 - 1/4 - 12 HEX GR8 Y-ZINC	16	15’ RACK(S/N 491-506)
11		598001	ZERK-1/4” NF ST GREASE	2	
12		240335001	BOLT-1/2-13X2 1/4 GR8 ZINC PLT	2	
13		485025	WASHER-1/2 FLAT-HARDENED-ZINC	2	
14		278875001	BRACKET - SIDE ROLLER	2	
15		235915003	BOLT ASSEMBLY-GREASE	2	
16		597001	ZERK-1/4” NF 90 DEG GREASE	2	
17		250604001	BOLT-3/4-10X3 1/4 GR8 HX Y/ZNC	2	
18		235739001	NUT-3/4-10 GR8 ZINC PLTD	4	
19		244679001	ROLLER-GUIDE	2	
20		244678001	BUSHING GUIDE ROLLER	2	
21		235717001	WASHER-3/4 FLAT HARDENED YELLOW ZINC	8	
22		75383001	NUT-1/2-UNC GR.8 JAM HEX	2	
23		235726001	BOLT-3/8-16X3/4 GR8 HEX ZNCPLT	6	15’ RACK ONLY
24		276467001	SWITCH - LIMIT NO/NC LEVER/ROLLER	2	15’ RACK ONLY
25		144654001	SCREW-#8-32 X 1 1/2 STOVE	8	15’ RACK ONLY
26		224769001	WASHER-#8 FLAT	14	15’ RACK ONLY
27		281802001	PLATE - SWITCH MOUNT	3	15’ RACK ONLY
28		399001	NUT-8-32 HEX	8	15’ RACK ONLY
29		276448001	SWITCH - LIMIT NO/NC	1	15’ RACK ONLY
29A		285735001	LEVER - LIMIT SWITCH OFFSET W/ INSIDE ROLLER	3	15’ RACK ONLY
30		905001001	BOLT-8-32 X 2 STOVE	2	
31		122474001	MOUNT-SANDWICH SINGLE STUD	2	
32		481001	WASHER-5/16 EXT STAR	2	
33		296256063	WELDMENT - GEARBOX CARRIAGE	1	10’ RACK,15’ RACK S/N 507-
34		401060001	BOLT 7/8” X 2.5” UNF GRD 8	16	10’ RACK,15’ RACK S/N 507-
35		288459001	WASHER - 7/8 FLAT HARD ZINC PLATED	16	10’ RACK,15’ RACK S/N 507-
36		296256062	ROLLER - 3.00 OD X 7/8 - 14 UNF INT THD	16	10’ RACK,15’ RACK S/N 507-
37		291656001	MOUNT-PROXY SWITCH	1	10’ RACK ONLY
38		291654001	MOUNT-PROXY SWITCH	2	10’ RACK ONLY
39		276442001	SWITCH - PROXIMITY 18 MM NO	3	10’ RACK ONLY
40		291655001	MOUNT-PROXY SWITCH	3	10’ RACK ONLY
41		235742001	BOLT-5/16-18X3/4 GR8 ZINC PLTD	8	10’ RACK ONLY
42		5544006	CAPSCREW-1/4-20X3/4 SOCKET HD.	6	10’ RACK ONLY
43		235714001	WASHER-5/16 SAE HARD ZINC PLTD	8	10’ RACK ONLY
44		248198001	NUT-1/4 - 20 GR8 TOP LOCK ZINC	6	10’ RACK ONLY
45		235716001	WASHER-1/4 SAE HARD ZINC PLTD	8	10’ RACK ONLY
46		291698001	WELDMENT-FRONT HOSE SHIELD	1	10’ RACK ONLY

https://truckmanualshub.com/

Rod Position Indicator Assembly Fig 2-7

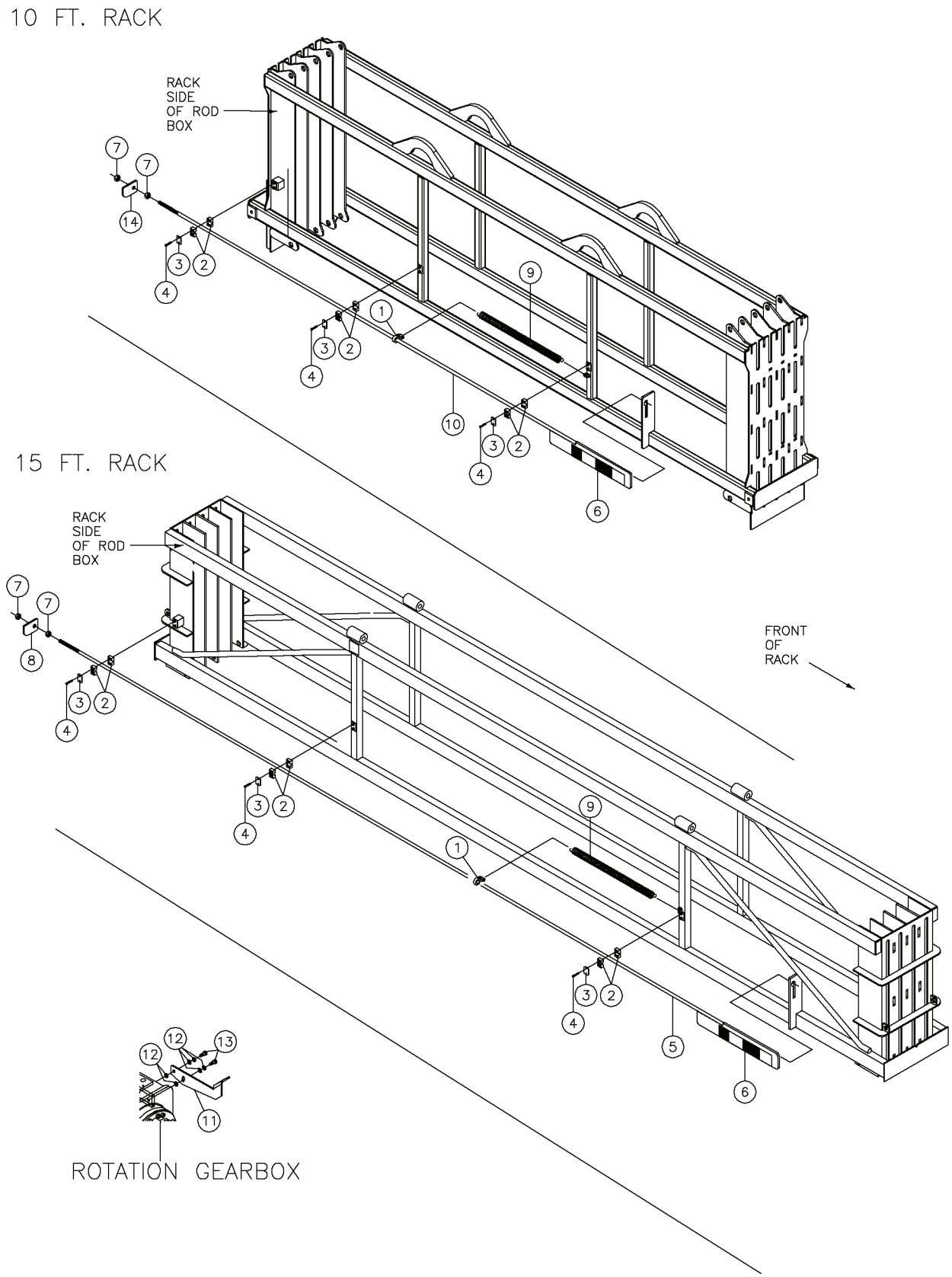

https://truckmanualshub.com/

Rod Position Indicator Assembly Fig 2-7

REF. NO.	*	PART NO.	DESCRIPTION	QTY.	REMARKS
1		227979001	MOUNT-ROD INDICATOR SPRING	1	
2		903135003	CLAMP-HOSE 20675-PP	3	
3		903135005	PLATE-COVER COP-2	6	
4		238210001	BOLT - 1/4-20X1 1/2 GR8 HEX ZYC	6	
5		279133001	ROD - POSITION MARKER	1	15’ RACK
6		700IA997	DECAL - GEARBOX POSITION	1	
7		250514001	NUT -5/8NC JAM Y/ZINC	2	
8		294543001	PLATE - INDICATOR ARM CATCH	1	15’ RACK
9		1789001	SPRING-1 1/8ODX15/16ID X15 EXT	1	
10		296256056	WELDMENT - ROD POSITION MARKER	1	10’ RACK
11		294542001	PLATE - INDICATOR ARM	1	
12		485025	WASHER-1/2 FLAT-HARDENED-ZINC	6	
13		240056001	SCREW-1/2-13X1/2 NCSOC HD ZNC	2	
14		296256120	PLATE - INDICATOR ARM CATCH	1	10’ RACK

https://truckmanualshub.com/

Umbrella Assembly Fig 2-8

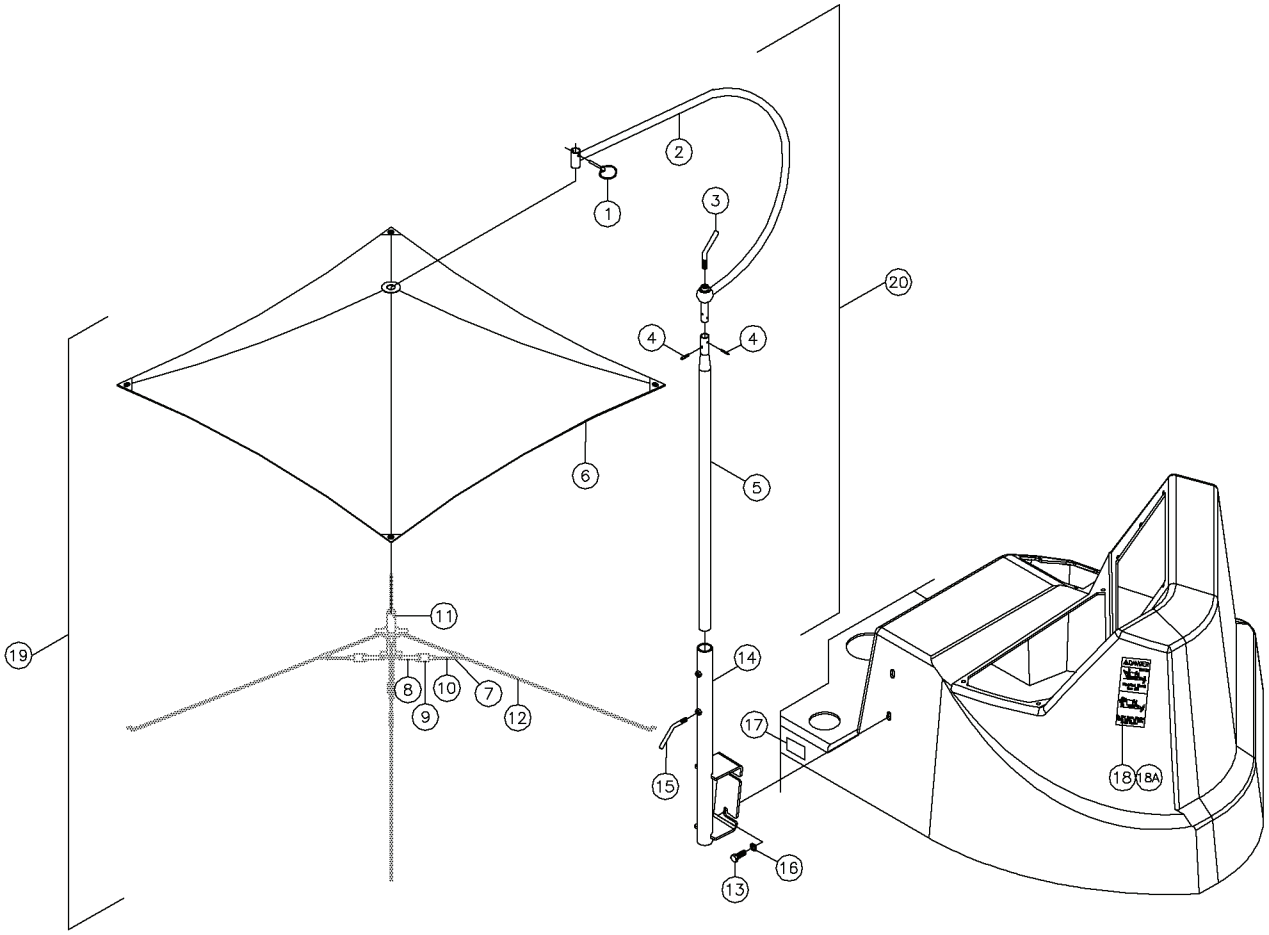

https://truckmanualshub.com/

Umbrella Assembly Fig 2-8

REF. NO.	*	PART NO.	DESCRIPTION	QTY.	REMARKS
1		1797003	PIN-QUICK ATTACHMENT LATCH 1/4”-XCX 6M DIA”	1	
2		238181003	CURVED SHAFT	1	
3		238181005	LOCKING HANDLE	1	
4		1978011	PIN ROLL 3/16 X 1 ZINC	2	
5		238181007	SUPPORT SHAFT-UMBRELLA	1	
6		240103001	SHEATH-UMBRELLA	1	
7		238181011	RIVET-PUSH PIN	12	
8		238181013	TUBE-PUSH ROD	4	
9		238181015	CLIP-PUSH ROD LOCKING SPRING	4	
10		238181017	PUSH ROD	4	
11		238181019	CENTER TUBE W/ SPIDERS	1	
12		238181021	BOW W/ CLEVIS	4	
13		16114010	BOLT-3/8-16X1 HEX HEAD GR. 8	2	
14		277682001	MOUNT - D33X44 UMBRELLA	1	
15		240038001	BOLT-TIGHTENING 3/8”	2	
16		99397001	WASHER-3/8 HARDEN ASTM-A325	2	
17		7000B387	DECAL - DSR	1	
18		7000A627	DECAL-DANGER	1	
18A		700IA627	DECAL-DANGER	1	
19		238181001	UMBRELLA-ASSY (PARTS REPAIR)		INC REF 1-12
20		240102001	FRAME-UMBRELLA		INC REF 2-5 & 7-12

https://truckmanualshub.com/

Drive Chuck Assembly Fig 2-9r01

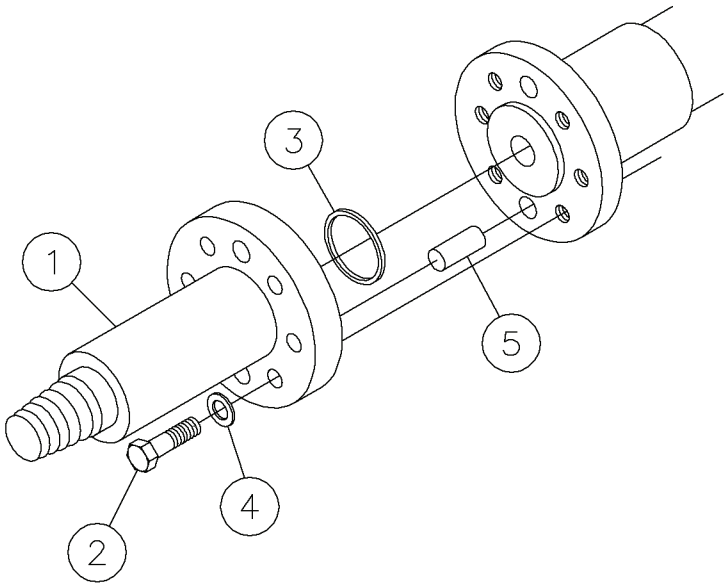

Drive Chuck Assembly Fig 2-9r01

REF. NO.	*	PART NO.	DESCRIPTION	QTY.	REMARKS
		Revision Date	June, 2004		Update In Illustration & Parts List.
1		284142001	SHAFT - DRIVE CHUCK 2 3/8 FIRESTICK II	1	
2		240334001	BOLT-1/2-13X1 3/4 GR8 ZINC PLT	6	
3		72897001	O RING-SQ. #24 FLANGE	1	
4		485025	WASHER-1/2 FLAT-HARDENED-YZ	6	
5		70096001	PIN-DOWEL 5/8DIA.-1 1/2	2	

Drive Chuck Assembly Fig 2-9

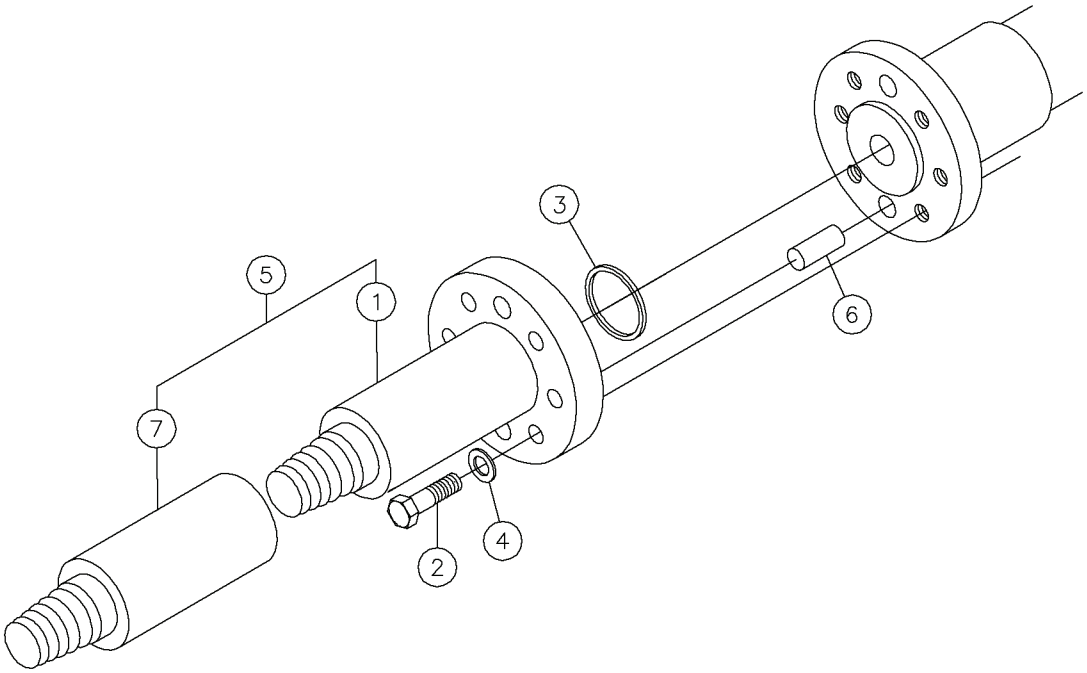

https://truckmanualshub.com/

Drive Chuck Assembly Fig 2-9

REF. NO.	*	PART NO.	DESCRIPTION	QTY.	REMARKS
1		276350001	SHAFT - DRIVE CHUCK 2-3/4 - #602	1	
2		240334001	BOLT-1/2-13X1 3/4 GR8 ZINC PLT	6	
3		72897001	O RING-SQ. #24 FLANGE	1	
4		485025	WASHER-1/2 FLAT-HARDENED-ZINC	6	
5		276316001	SHAFT-DRIVE CHUCK 2 3/4FRSTKII	1	
6		70096001	PIN-DOWEL 5/8DIA.-1 1/2	2	
7		276351001	SHAFT - SAVER SUB 2-3/4 OD	1	

https://truckmanualshub.com/

Engine Assembly Components Fig 3-1r01

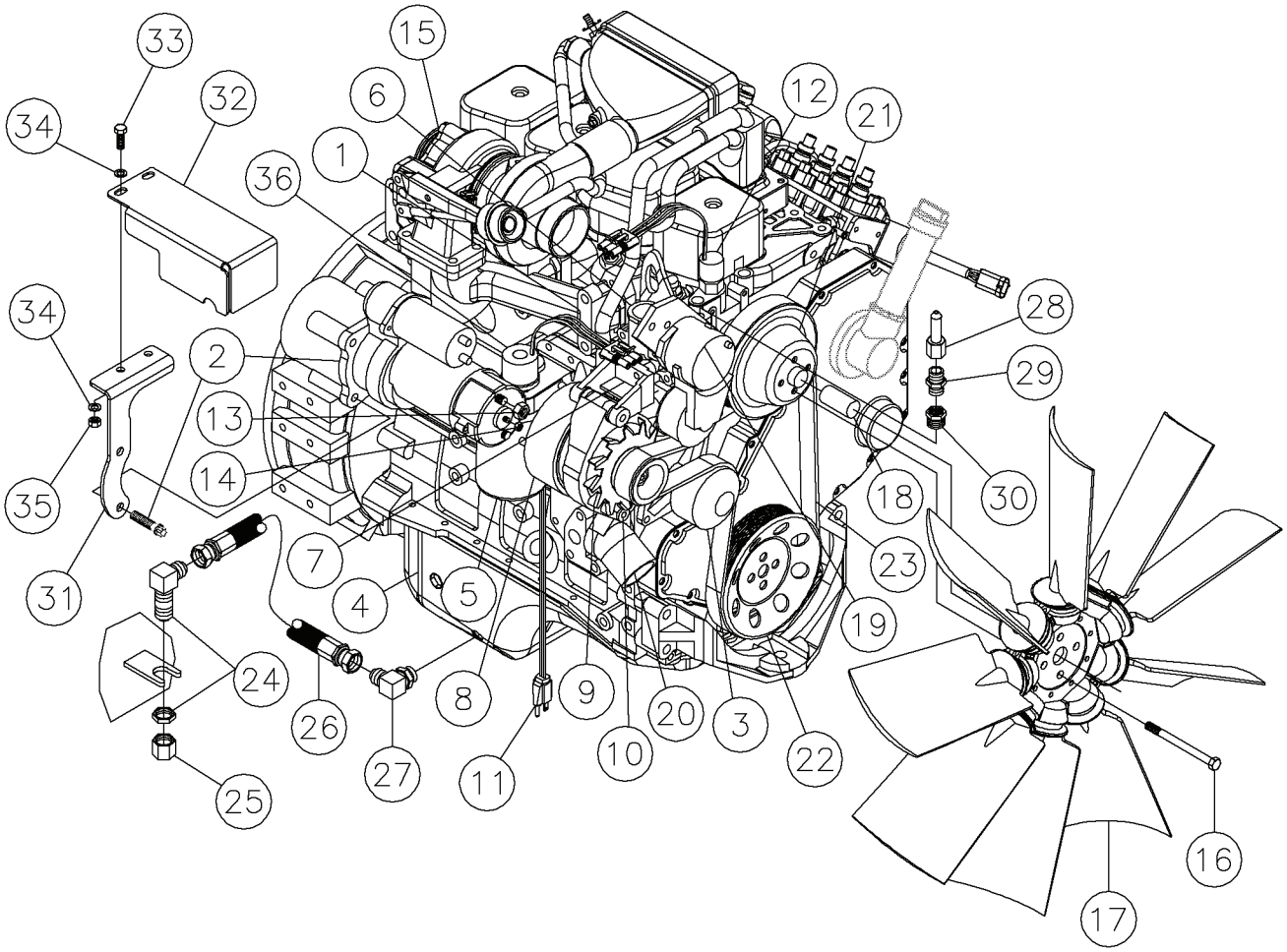

Engine Assembly Components Fig 3-1r01

REF. NO.	*	PART NO.	DESCRIPTION	QTY.	REMARKS
		Revision Date	June, 2004		Update In Illustration & Parts List.
1		220162003	MANIFOLD-EXHAUST	1	*
1A		220681027	EXHAUST MANIFOLD BOLT	8	*
1B		234218003	GASKET-EXHAUST MANIFOLD	4	*
2		103000001	STARTER AND SOLENOID	1	*
2A		220681025	STARTER MOUNTING BOLT	2	*
3		220162009	WATER PUMP	1	*
3A		220681031	SEAL-RECTANGULAR RING	1	*
4		224558009	OIL PUMP	1	*
5		104071001	FILTER-OIL	1	*
6		104073001	THERMOSTAT	1	*
6A		104074001	GASKET-THERMOSTAT	1	*
7		220681017	ALTERNATOR BRACKET-UPPER	1	*
7A		220681021	ALTERNATOR MOUNTING BOLT-UPPER	1	*
8		131659001	SHEAVE-ALTERNATOR	1	*
9		220162039	ALTERNATOR BRACKET-LOWER	1	*
10		220681019	ALTERNATOR MOUNTING BOLT-LOWER	1	*
10A		220681023	HEATER-ENGINE	2	*
11		104067001	CABLE-ENGINE HEATER	1	*
11A		104068001	CABLE-ENGINE HEATER	1	
12		227965001	SWITCH-TEMPERATURE (220F)	1	
12A		730005	FITTING-BSHG-8MNPT-6FNPT-HEX	1	
13		61656001	NUT-HEX M10-1.50 CL8 YZ D934	1	
14		61655001	NUT-5MX.80 PITCH 934 DIN	1	*
15		234218009	TURBO	1	*
15A		234218011	BOLT-M10X130 GR10.9 HHCS	1	
16		278846001	BOLT-M10X130 GR10.9 HHCS	4	
17		278894001	FAN - 27” PUSHER	2	*
18		234218009	TURBO	1	*
19		234218005	TENSIONER-BELT (GROOVED)	1	*
20		251147003	THERMOSTAT GASKET	1	*
20A		244699007	PULLEY-FAN	1	*
21		234218025	PULLEY-CRANKSHAFT	1	*
22		107606001	BOLT-CRANKSHAFT PULLEY	1	*
22A		103011001	BELT	4	*
23		251147005	FITTING-10M JIC BULKHEAD 90DEG	1	
24		77735001	FITTING - BH90 - 10MJ - 10MJ - LN	1	
25		78062001	FITTING - CAP - 10FJ	1	
26		53842065	HOSE-5/8X16 10FS JIC (100R1)	1	
27		100351001	FITTING-90-10MJ-M18X1.5MORBA	1	*
28		103007001	COUPLING	1	*
29		103006001	BUSHING	1	*
30		103005001	BRACKET - STARTER SHIELD	1	
31		285600001	BRACKET - STARTER SHIELD	1	
32		285601001	SHIELD - STARTER	1	
33		235727001	BOLT-3/8-16X1 GR8 HEX ZINC PLT	2	
34		235713001	WASHER - FLATSTRL - .38 - .41 X .81 - .06-YA-A325	4	
35		235725001	NUT - HEX - .38 - 16 - GR8 - YZ	2	
36		98678001	SWITCH-PRESSURE SIN POLE 9 PSI	1	
			NOTE: * ITEMS WARRANTED BY AUTHORIZED CUMMINS DEALER		

https://truckmanualshub.com/

Engine Assembly Components Fig 3-1

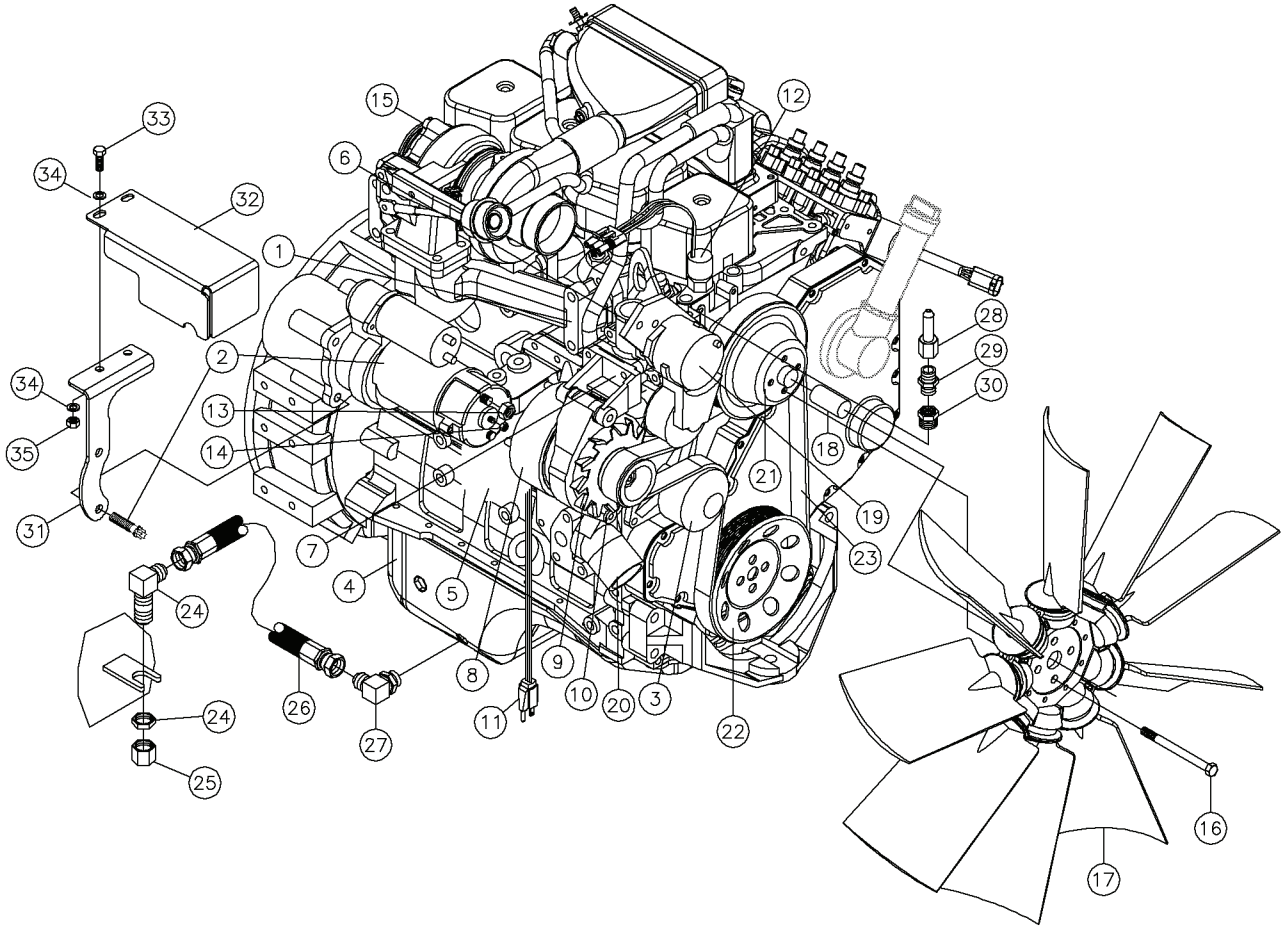

Engine Assembly Components Fig 3-1

REF. NO.	*	PART NO.	DESCRIPTION	QTY.	REMARKS
1		220162003	MANIFOLD-EXHAUST	1	*
1A		220681027	EXHAUST MANIFOLD BOLT	8	*
1B		234218003	GASKET-EXHAUST MANIFOLD	4	*
2		103000001	STARTER AND SOLENOID	1	*
2A		220681025	STARTER MOUNTING BOLT	2	*
3		220162009	WATER PUMP	1	*
3A		220681031	SEAL-RECTANGULAR RING	1	*
4		224558009	OIL PUMP	1	*
5		104071001	FILTER-OIL	1	*
6		104073001	THERMOSTAT	1	*
6A		104074001	GASKET-THERMOSTAT	1	*
7		220681017	ALTERNATOR BRACKET-UPPER	1	*
7A		220681021	ALTERNATOR MOUNTING BOLT-UPPER	1	*
9		220162039	SHEAVE-ALTERNATOR	1	*
10		220681019	ALTERNATOR BRACKET-LOWER	1	*
10A		220681023	ALTERNATOR MOUNTING BOLT-LOWER	2	*
11		104067001	HEATER-ENGINE	1	*
11A		104068001	CABLE-ENGINE HEATER	1	*
12		227965001	SWITCH-TEMPERATURE (220F)	1	
12A		730005	FITTING-1/2X3/8HEX BUSH. STEEL REF T07746	1	
13		61656001	NUT-HEX M10-1.50 CL8 YZ D934	1	
14		61655001	NUT-5MX.80 PITCH 934 DIN	1	
15		234218009	TURBO	1	*
15A		234218011	GASKET-TURBO	1	*
16		278846001	BOLT-M10X130 GR10.9 HHCS	4	
17		278894001	FAN - 27” PUSHER	1	
18		234218009	TURBO	2	*
19		234218005	TENSIONER-BELT (GROOVED)	1	*
20		251147003	WATER INLET	1	*
20A		244699007	THERMOSTAT GASKET	1	*
21		234218025	PULLEY-FAN	1	*
22		107606001	PULLEY-CRANKSHAFT	1	*
22A		103011001	BOLT-CRANKSHAFT PULLEY	4	*
23		251147005	BELT	1	*
24		77735001	FITTING-10M JIC BULKHEAD 90DEG	1	
25		78062001	FITTING-10F JIC CAP NUT	1	
26		53842065	HOSE-5/8X16 10FS JIC (100R1)	1	
27		100351001	FITTING-90-10MJ-M18X1.5MORBA	1	
28		103007001	VALVE-CHECK	1	*
29		103006001	COUPLING	1	*
30		103005001	BUSHING	1	*
31		285600001	BRACKET - STARTER SHIELD	1	
32		285601001	SHIELD - STARTER	1	
33		235727001	BOLT-3/8-16X1 GR8 HEX ZINC PLT	2	
34		235713001	WASHER-3/8 SAE HARD ZINC PLTD	4	
35		235725001	NUT-3/8-16 GR8 ZINC PLTD	2	

https://truckmanualshub.com/

Engine Assembly Components Fig 3-2

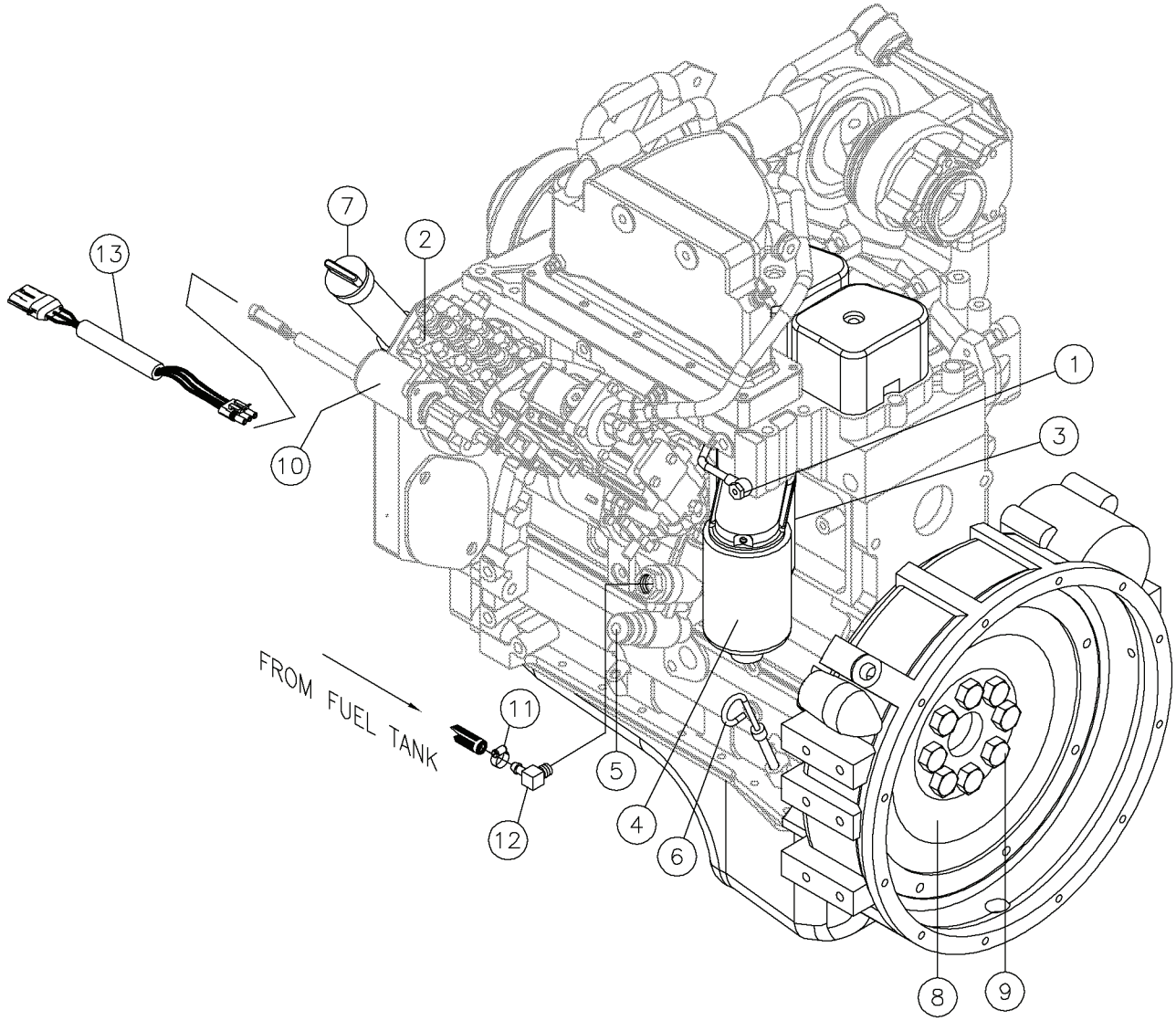

Engine Assembly Components Fig 3-2

REF. NO.	*	PART NO.	DESCRIPTION	QTY.	REMARKS
1		11981001	SENDER-8992016 WATER TEMP	1	*
2		234218013	PUMP-FUEL INJECTION	1	*
2A		234218015	GASKET-INJECTION PUMP	1	*
2A		234218017	INJECTOR-FUEL	4	*
3		220162025	FILTER-SECONDARY FUEL	1	*
4		220162023	FILTER-PRIMARY FUEL W/SEPARATR	1	*
5		234218019	PUMP-FUEL LIFT	1	*
5A		220681013	FUEL PUMP GASKET	1	*
6		234218021	DIPSTICK	1	*
6A		234218023	DIPSTICK TUBE -MIDDLE	1	*
7		102996001	CAP-OIL FILL	1	*
8		104063001	FLYWHEEL	1	*
9		103027001	BOLT-FLYWHEEL	8	*
10		234218031	SOLENOID - FUEL PUMP	1	*
11		1578001	HOSE CLAMP - 1/4”	1	
12		11384001	FITTING-1557 WTHR-HD	1	
13		278990001	MODULE - 0.7 SEC. TIME DELAY	1	

https://truckmanualshub.com/

Pump Drive Assembly Fig 3-3

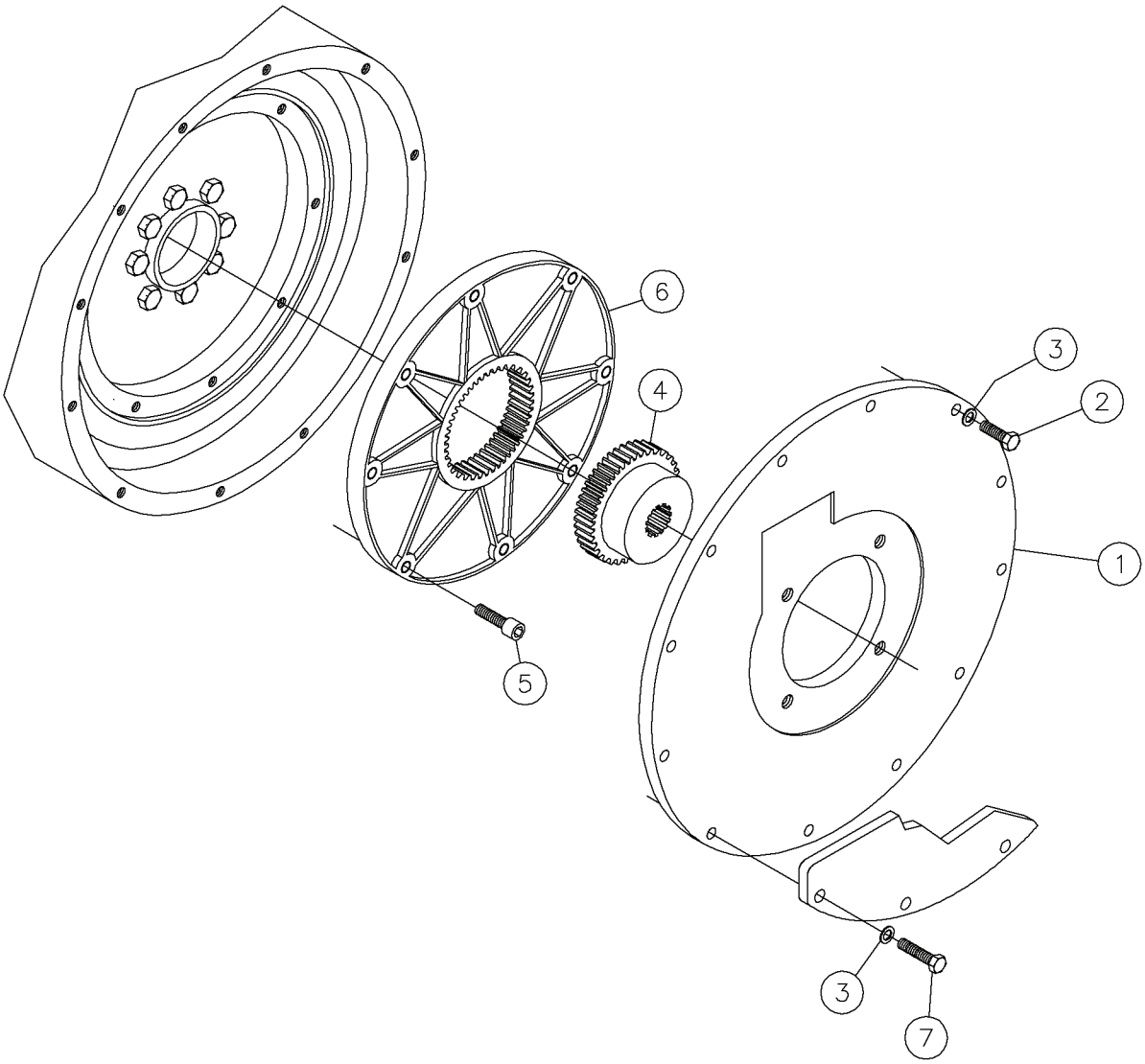

Pump Drive Assembly Fig 3-3

REF. NO.	*	PART NO.	DESCRIPTION	QTY.	REMARKS
1		278984001	PLATE - PUMP MOUNT	1	REPLACES 249786001
2		249891001	BOLT-M10X35 10.9 HHCS D933 ZNC	8	
3		141350001	WASHER-M10 HARDEN PLATED FLAT	12	
4		278981001	HUB - 14T PUMP DRIVE	1	
5		4478014	CAPSCREW-3/8-16X1 1/2 SOCHD G8	8	
6		220075001	FLANGE-65 FLE-PA 10”FLYWHEEL	1	
7		250574001	BOLT-10M X 50M 10.9 HEX Y/ZINC	4	

Engine Mount Assembly Fig 3-4

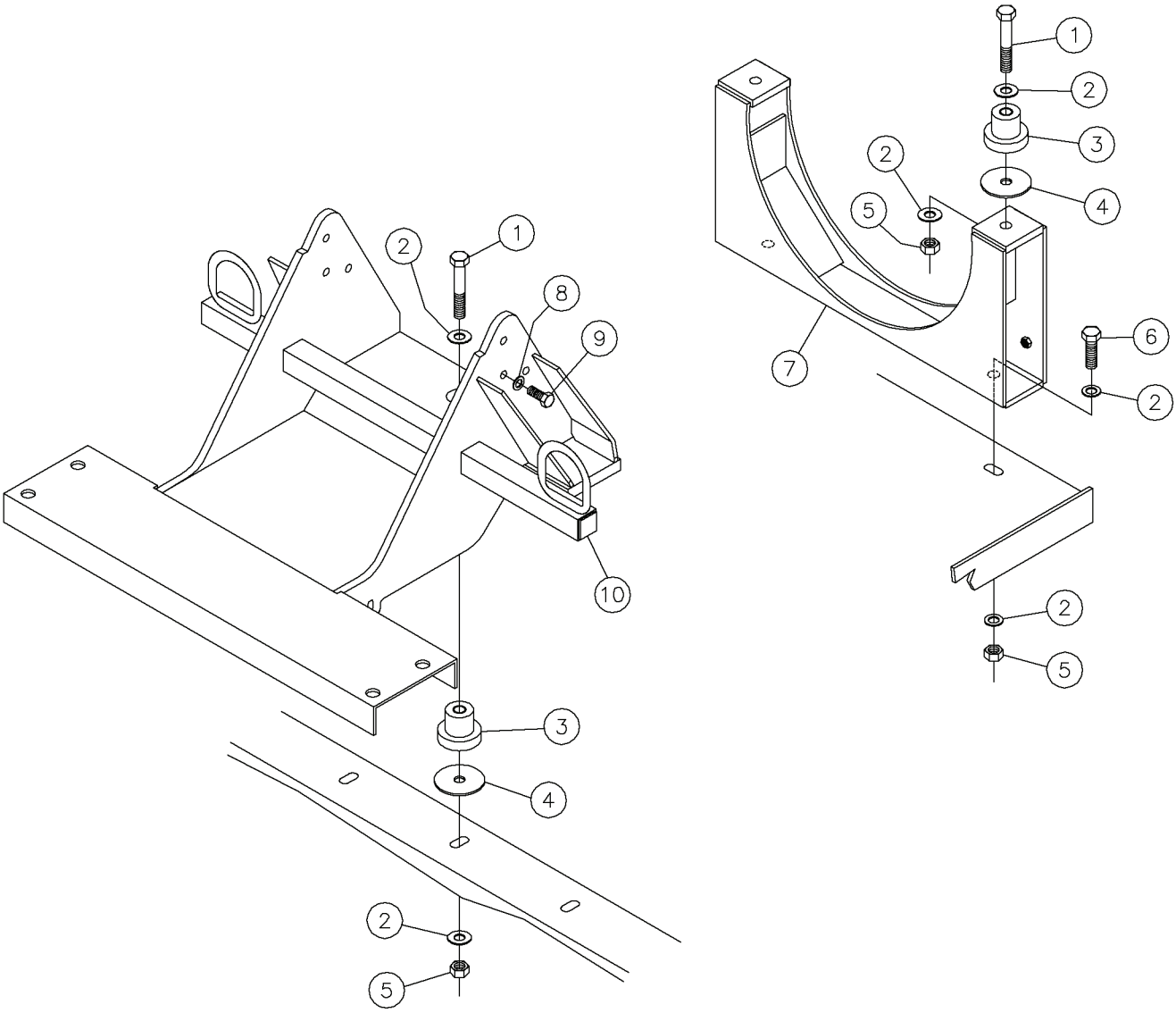

Engine Mount Assembly Fig 3-4

REF. NO.	*	PART NO.	DESCRIPTION	QTY.	REMARKS
1		250500001	BOLT 5/8”-11 X 3 3/4” GR8 HEX	3	
2		235715001	WASHER-5/8 SAE HARD ZINC PLTD	10	
3		220165001	MOUNT-M500-50-NR RUBBER	3	
4		220203001	SLUG-ENGINE MOUNT	3	
5		238221001	NUT - 5/8-11 GR.8NCY-ZINC	5	
6		145645001	BOLT - 5/8 - 11 X 2 GR.8 PLATED	2	
7		251185001	MOUNT - REAR ENGINE	1	
8		238249001	WASHER - 12MM HARD Y/ ZINC	6	
9		250516001	BOLT - 12M X 35M GR8 Y/ZINC	6	
10		251182001	MOUNT - FRONT ENGINE	1	

https://truckmanualshub.com/

Engine Hood Assembly Fig 3-5

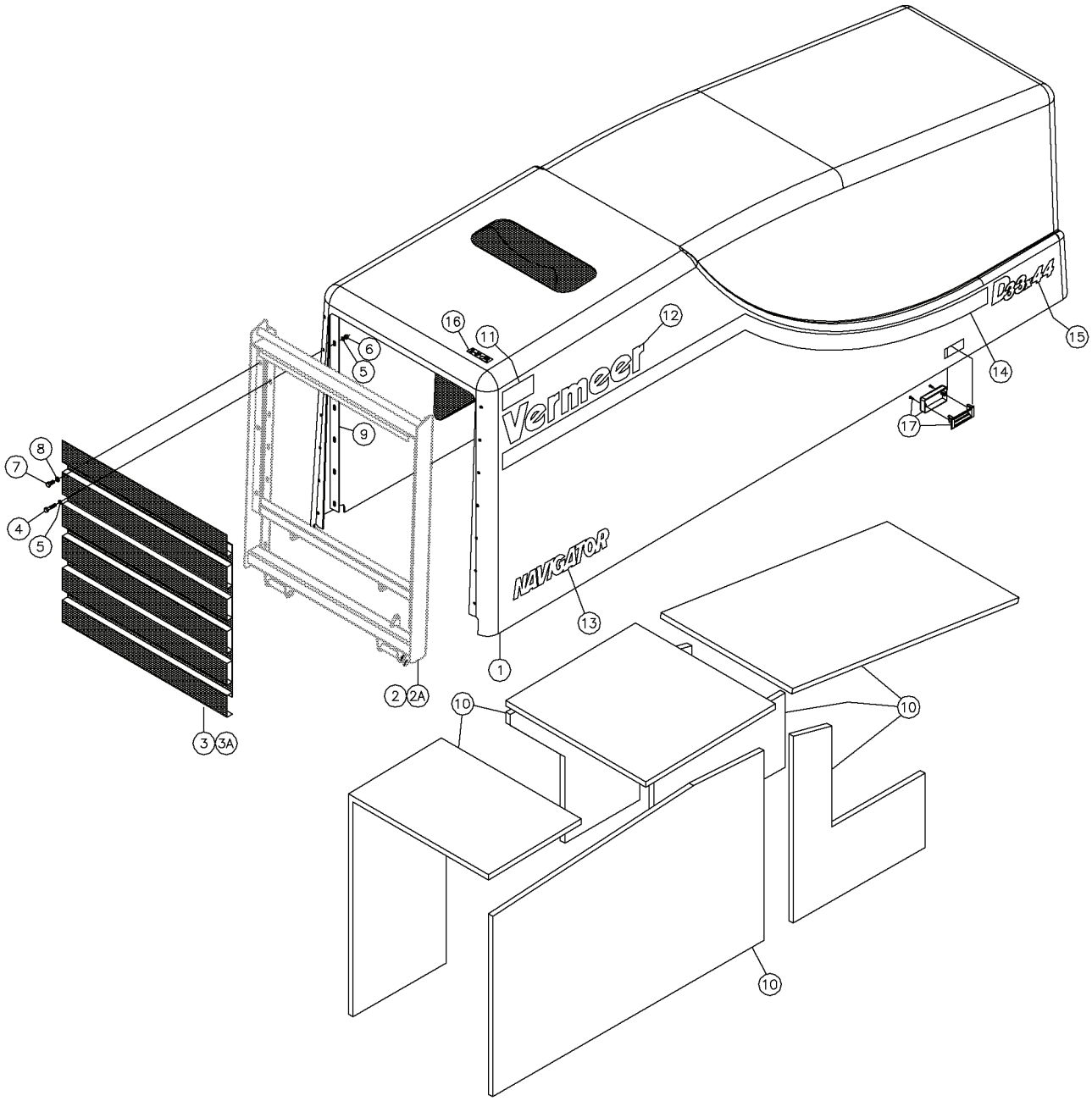

Engine Hood Assembly Fig 3-5

REF. NO.	*	PART NO.	DESCRIPTION	QTY.	REMARKS
1		251127001	SHIELD - ENGINE	1	
2		291520001	GRILLE - REAR	1	
3		291518001	SCREEN - GRILLE	1	
4		248031001	BOLT-5/16-18X1 1/4 GR8 ZINC PL	14	
5		235714001	WASHER-5/16 SAE HARD ZINC PLTD	28	
6		235741001	NUT-5/16-18 GR8 ZINC PLTD	14	
7		235727001	BOLT-3/8-16X1 GR8 HEX ZINC PLT	6	
8		235713001	WASHER-3/8 SAE HARD ZINC PLTD	6	
9		278829001	BAR - GRILLE MOUNT	2	
10		251127003	FOAM KIT - HOOD	1	
11		7000A576	DECAL-DANGER	1	
12		7000B059	DECAL - VERMEER 6”	1	
13		70000614	DECAL-MODEL NAVIGATOR (BIG)	1	
14		700IB179	DECAL - 3” STRIPE	1	
15		7000B157	DECAL-MODEL D33X44	1	
16		7000B388	DECAL - HOOD LATCH	1	
17		292053001	POCKET PULL	1	

Engine Shield Latch Assembly Fig 3-6

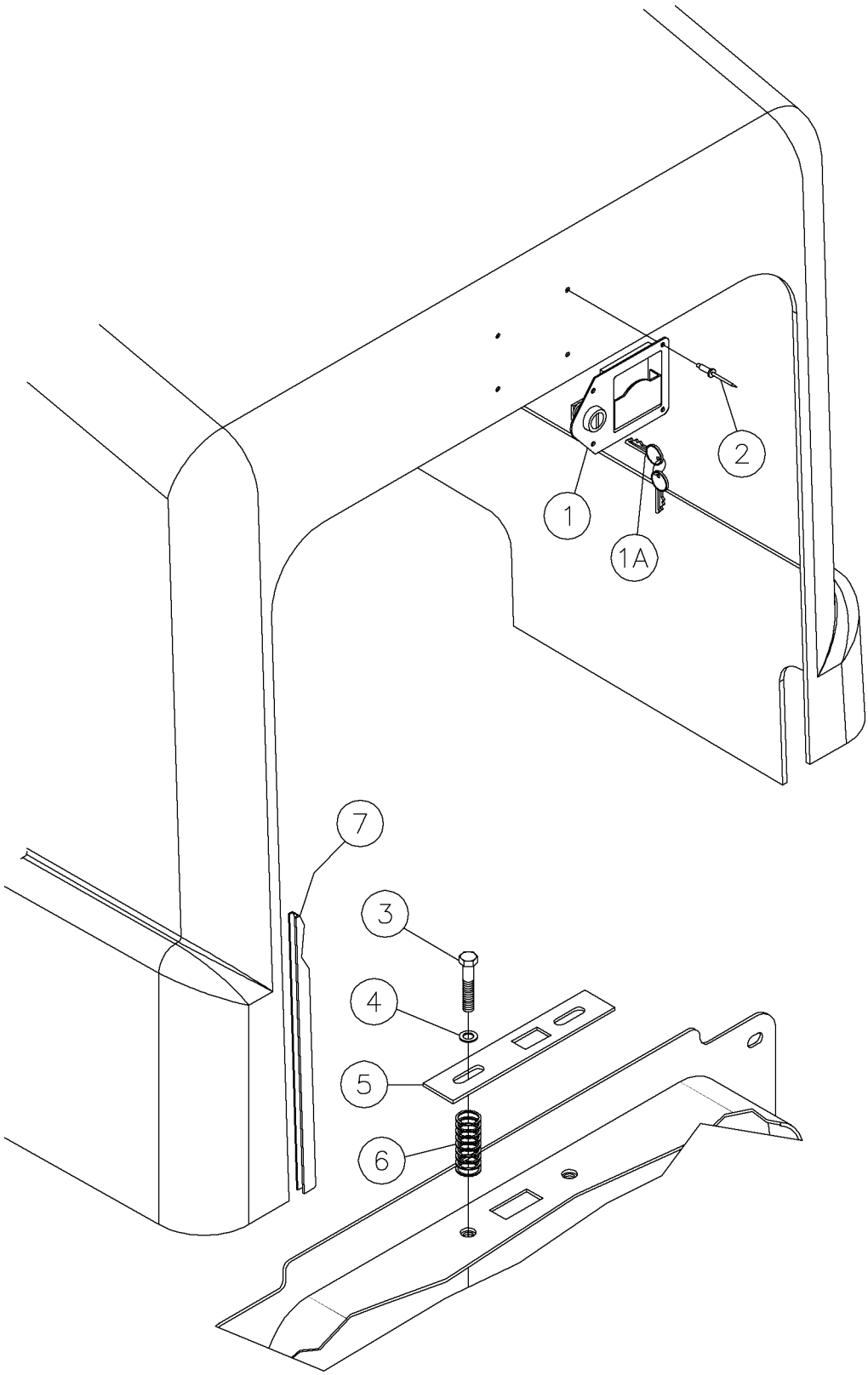

Engine Shield Latch Assembly Fig 3-6

REF. NO.	*	PART NO.	DESCRIPTION	QTY.	REMARKS
1		276478001	LATCH - HOOD	1	
1A		285595001	KEY - LATCH	1	
2		547009	POP RIVET-AA54D	4	
3		240454001	BOLT-3/8-16X2 GR#8 ZINC PLTD	2	
4		235713001	WASHER-3/8 SAE HARD ZINC PLTD	2	
5		276476001	PLATE - STRIKER	1	
6		285776001	SPRING - COMP #49 1.00 O.A.	2	
7		212522001	TRIM-1/4 EDGE	5.41	Feet

https://truckmanualshub.com/

Hood Pivot Assembly Fig 3-7r01

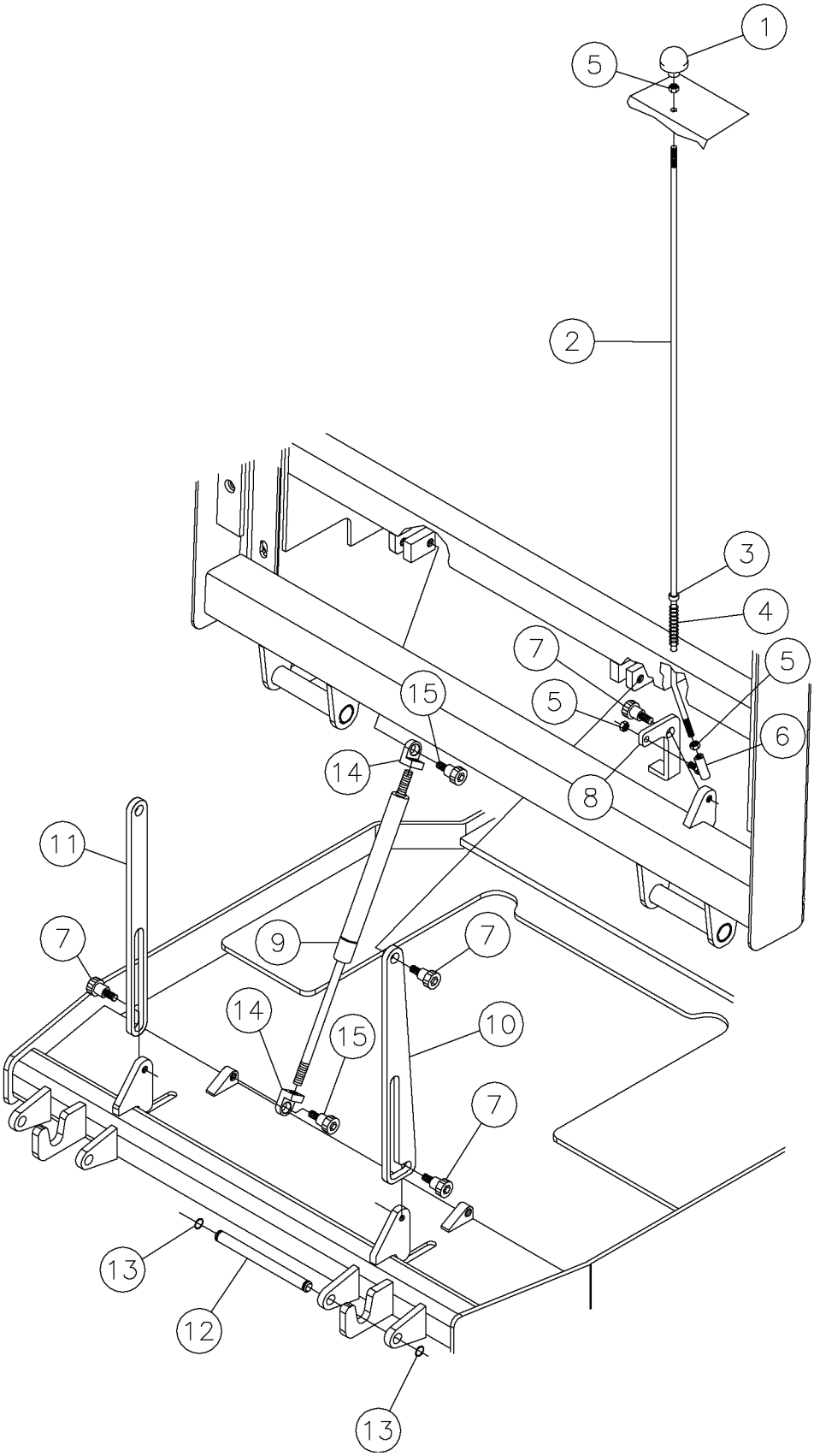

https://truckmanualshub.com/

Hood Pivot Assembly Fig 3-7r01

REF. NO.	*	PART NO.	DESCRIPTION	QTY.	REMARKS
		Revision Date	June, 2004		Update In Illustration & Parts List.
1		279113001	KNOB - WEATHERHEAD PUSH-PULL	1	
2		279060001	LINKAGE - ROD HOOD LATCH	1	
3		1500001	SET COLLAR - 1/4 PLATED	1	
4		1803089	SPRING-COMP.#30 3/8ODX5/16ID.	1	
5		4734001	NUT-1/4-28 NF HEX	3	
6		1489001	BALL JOINT - 1/4” SP1002 CP REF T14924	1	
7		240056001	SCREW-SHSS-.50X.50-.38-16THD-CZ	5	
8		279058001	PIVOT - DISCONNECT BRACKET	1	
9		251144001	SPRING - GAS ASSIST	2	
10		279063001	PLATE -LOCK HOOD CATCH	1	
11		251181001	PLATE - HOOD CATCH	1	
12		251214001	PIN-HOOD PIVOT	2	REPLACES 251214001
13		510049	PIN-3/32X1 COTTER	4	REPLACES 510049
14		296256016	PIVOT - HOOD SHOCK	2	
15		296256038	SCREW - SHSS - .50X.38-.38-16 THD-CZ	4	

https://truckmanualshub.com/

Hood Pivot Assembly Fig 3-7

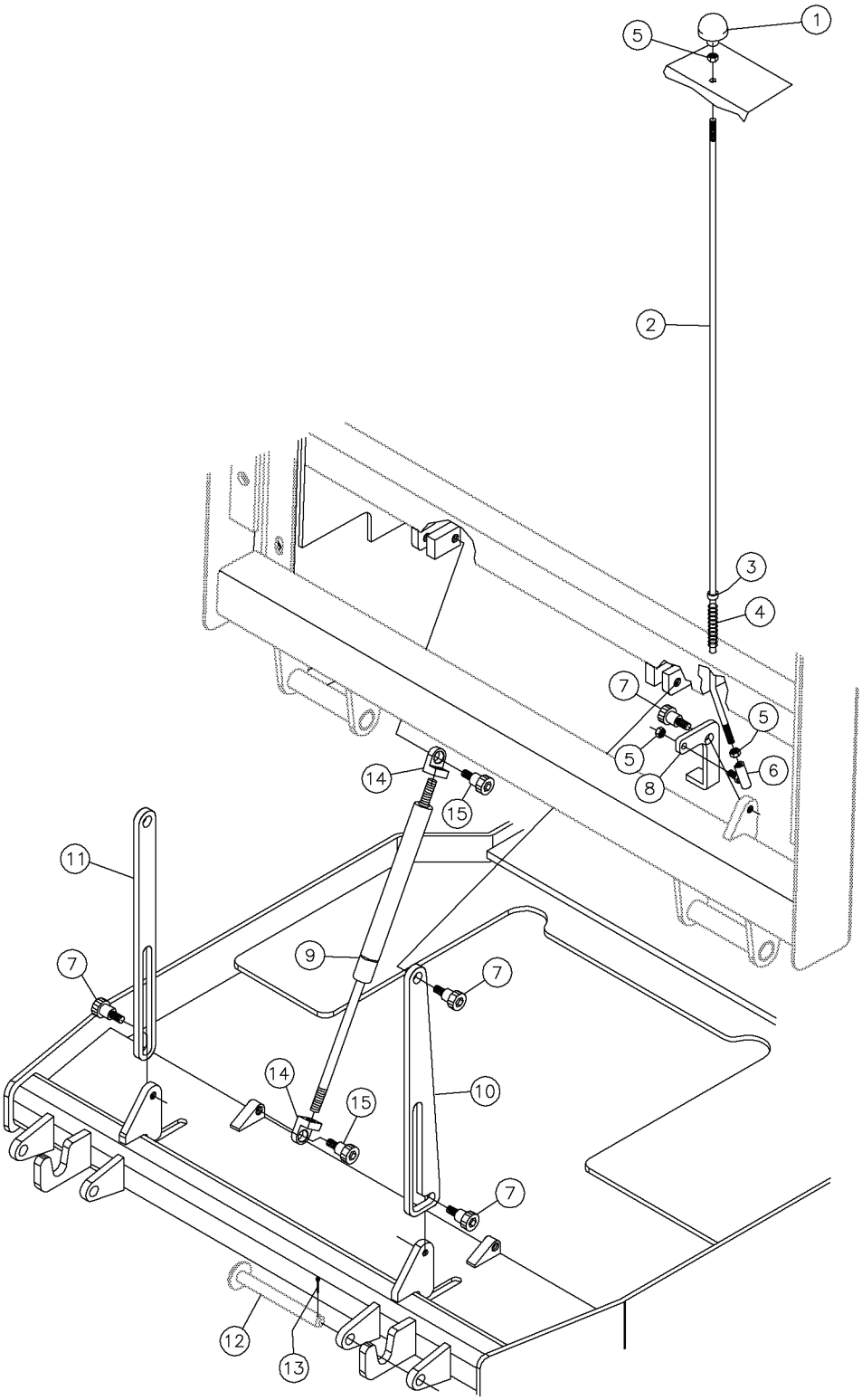

Hood Pivot Assembly Fig 3-7

REF. NO.	*	PART NO.	DESCRIPTION	QTY.	REMARKS
1		279113001	KNOB - WEATHERHEAD PUSH-PULL	1	
2		279060001	LINKAGE - ROD HOOD LATCH	1	
3		1500001	SET COLLAR - 1/4 PLATED	1	
4		1803089	SPRING-COMP.#30 3/8ODX5/16ID.	1	
5		4734001	NUT-1/4-28 NF HEX	3	
6		1489001	BALL JOINT - 1/4” SP1002 CP	1	
7		240056001	SCREW-1/2-13X1/2 NCSOC HD ZNC	5	
8		279058001	PIVOT - DISCONNECT BRACKET	1	
9		251144001	SPRING - GAS ASSIST	2	
10		279063001	PLATE -LOCK HOOD CATCH	1	
11		251181001	PLATE - HOOD CATCH	1	
12		291616001	PIN-1/2” X 5.75	2	REPLACES 251214001
13		294761001	SNAP RING - .50 SHR-50	4	REPLACES 510049
14		296256016	PIVOT - HOOD SHOCK	2	
15		296256038	SCREW - SHSS - .50X.38-.38-16 THD-CZ	2	

https://truckmanualshub.com/

Radiator Assembly Fig 3-8

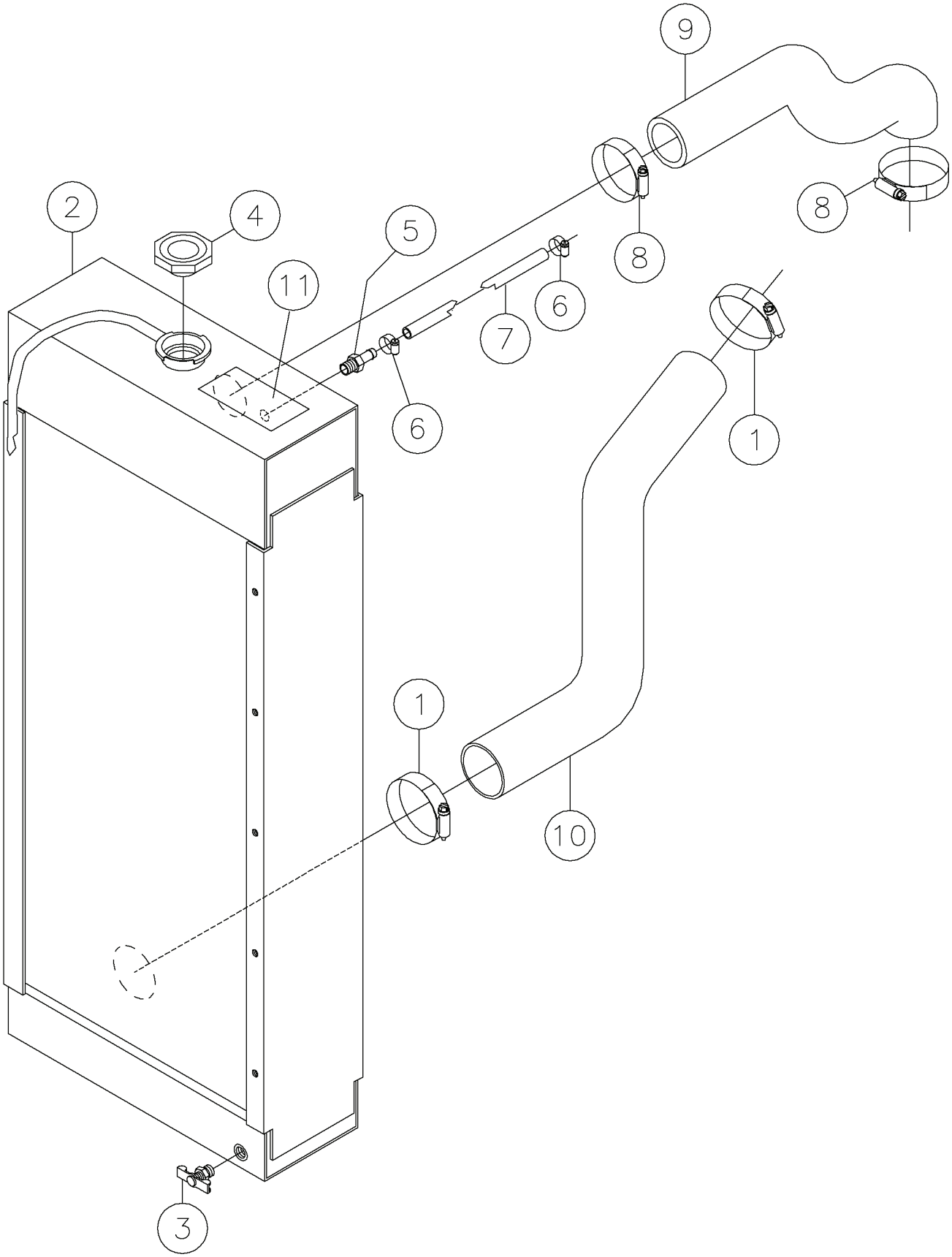

https://truckmanualshub.com/

Radiator Assembly Fig 3-8

REF. NO.	*	PART NO.	DESCRIPTION	QTY.	REMARKS
1		1580015	HOSE CLAMP - 3”	2	
2		278860001	RADIATOR	1	
3		225532005	DRAIN COCK-1/4”	1	
4		251136003	CAP - RADIATOR (7 LB)	1	
5		102118001	FITTING-1/4NPT X 3/8 HOSE BARB	1	
6		1580001	HOSE CLAMP - 3/8”	2	
7		57706001	HOSE-3/8” 200PSI 1 PLY BLACK	A/R	(SPECIFY LENGTH)
8		1580013	HOSE CLAMP - 2 1/2”	2	
9		251196001	HOSE - UPPER RADIATOR	1	
10		251195001	HOSE - LOWER RADIATOR	1	
11		2326315	DECAL-WARNING	1	
11A		2326I315	DECAL-WARNING	1	

https://truckmanualshub.com/

Radiator Shroud Assembly Fig 3-9r01

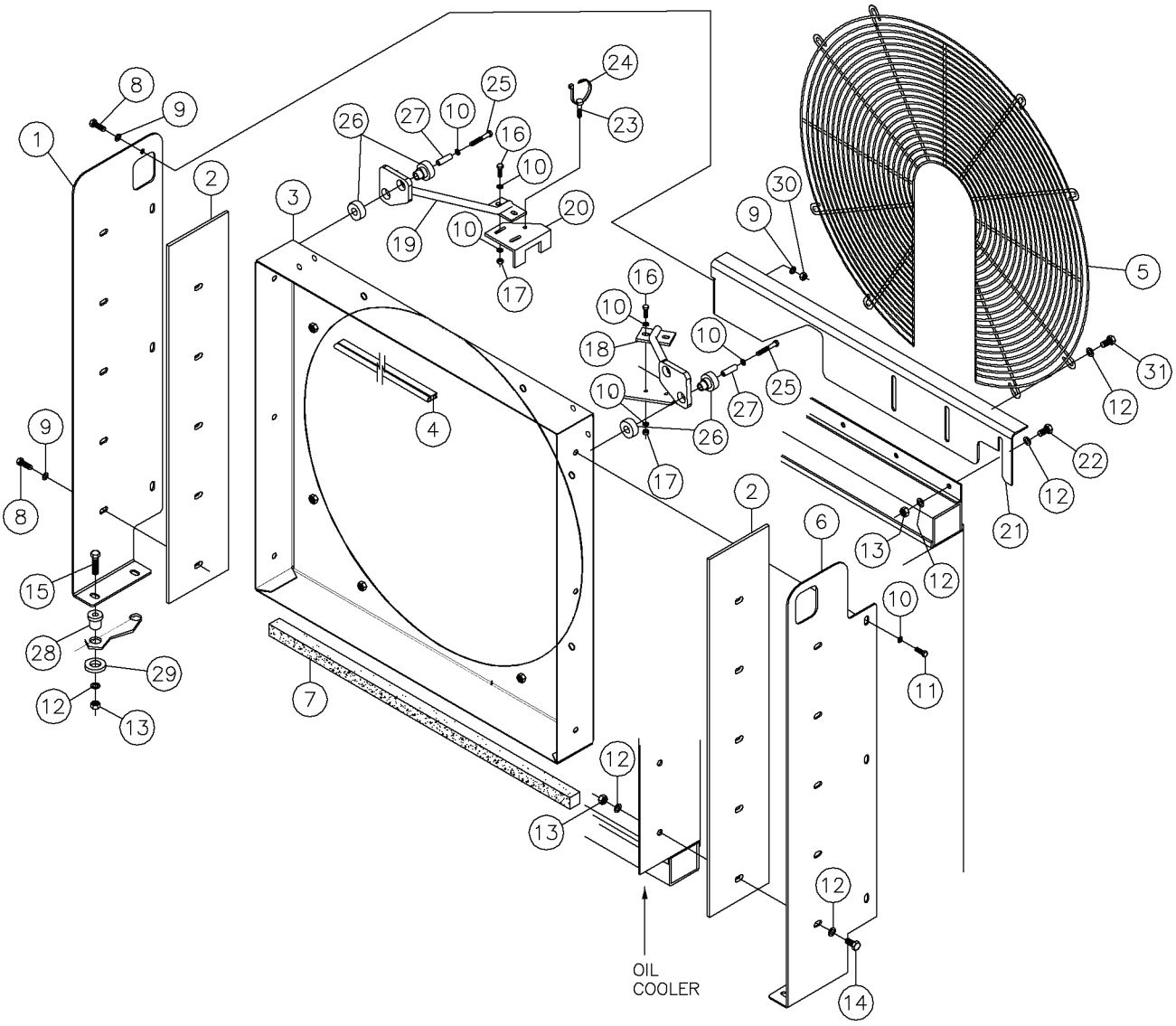

https://truckmanualshub.com/

Radiator Shroud Assembly Fig 3-9r01

REF. NO.	*	PART NO.	DESCRIPTION	QTY.	REMARKS
		Revision Date	June, 2004		Update In Illustration & Parts List.
1		291539001	MOUNT-LEFT RADIATOR	1	
2		278823001	FOAM - RADIATOR	2	
3		251184001	SHROUD - FAN	1	
4		97456001	SEAL-BULB EDGE 1/8” STYLE	A/R	(SPECIFY LENGTH)
5		278886001	GUARD - FAN	1	
6		251157001	MOUNT - RIGHT RADIATOR	1	
7		278868001	FOAM - 1X1X30 W/ ADHESIVE	2	
8		235742001	BOLT-5/16-18X3/4 GR8 ZINC PLTD	6	
9		235714001	WASHER - FLATSTRL - .31 - .34 X .69 - .06-YZ-A325	6	
10		235716001	WASHER - FLATSTRL - .25 -.28 X .63 - .06 - CZ	18	
11		235735001	BOLT-1/4-20X1 GR8 HEX ZNC PLTD	6	
12		235713001	WASHER - FLATSTRL - .38 - .41 X .81 - .06-YA-A325	28	
13		235725001	NUT - HEX - .38 - 16 - GR8 - YZ	12	
14		235727001	BOLT-3/8-16X1 GR8 HEX ZINC PLT	5	
15		235723001	SCREW - HCS -.38 - 16 X 1.50 - GR8 - YZ	4	
16		235734001	BOLT-1/4-20X3/4 GR8 ZINC PLTD	4	
17		235732001	NUT - HEX - .25 - 20 - GR8 - YZ	4	
18		291548001	BRACKET-LONG RADIATOR	1	
19		291547001	BRACKET-SHORT RADIATOR	1	
20		278850001	PLATE - SUPPORT MOUNT	1	
21		291540001	PLATE-RADIATOR TOP FILLER	1	
22		235727001	BOLT-3/8-16X1 GR8 HEX ZINC PLT	3	
23		278953001	ANCHOR - CABLE TIE	1	
24		59634001	SINGLE NYTIE - 8”	1	
25		248197001	BOLT-1/4-20X2 GR.8 ZINC PLTD	4	
26		294553001	MOUNT-UPPER RADIATOR ISOLATOR	4	
27		291550001	SPACER-RADIATOR ISOLATOR	4	
28		294552001	MOUNT-LOWER RADIATOR ISOLATOR	4	
29		291549001	SPACER-LOWER ISOLATOR	4	
30		235741001	NUT - HEX - .31 - 18 - GR8 -YZ	1	
31		601696010	SOCKET HD CAP SCREW 3/8-16X1 Z	8	

https://truckmanualshub.com/

Radiator Shroud Assembly Fig 3-9

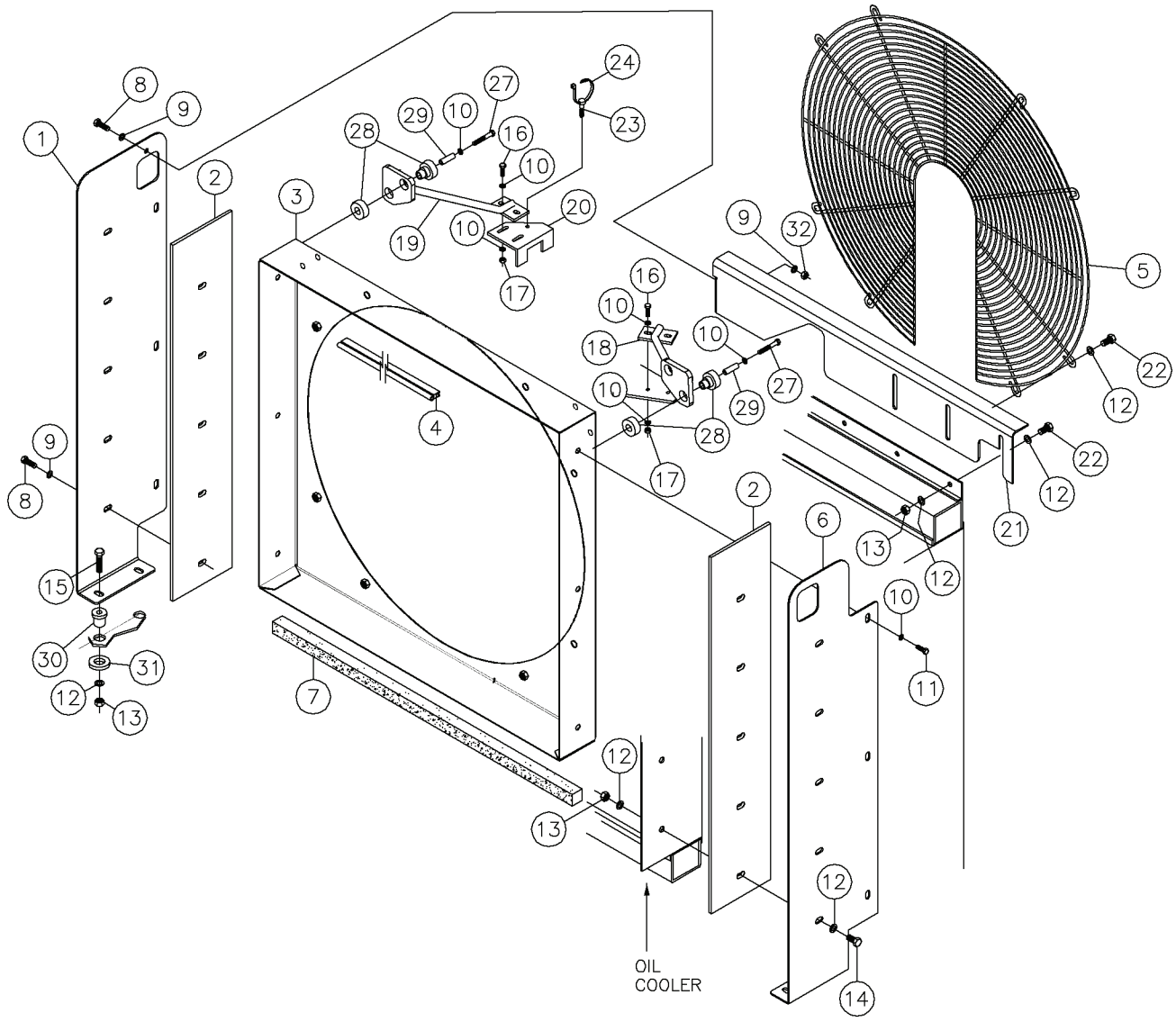

Radiator Shroud Assembly Fig 3-9

REF. NO.	*	PART NO.	DESCRIPTION	QTY.	REMARKS
1		291539001	MOUNT-LEFT RADIATOR	1	
2		278823001	FOAM - LEFT RADIATOR	2	
3		251184001	SHROUD - FAN	1	
4		97456001	SEAL-BULB EDGE 1/8” STYLE	A/R	SPECIFY LENGTH
5		278886001	GUARD - FAN	1	
6		251157001	MOUNT - RIGHT RADIATOR	1	
7		278868001	FOAM - 1X1X30 W/ ADHESIVE	2	
8		235742001	BOLT-5/16-18X3/4 GR8 ZINC PLTD	6	
9		235714001	WASHER-5/16 SAE HARD ZINC PLTD	6	
10		235716001	WASHER-1/4 SAE HARD ZINC PLTD	18	
11		235735001	BOLT-1/4-20X1 GR8 HEX ZNC PLTD	6	
12		235713001	WASHER-3/8 SAE HARD ZINC PLTD	28	
13		235725001	NUT-3/8-16 GR8 ZINC PLTD	12	
14		235727001	BOLT-3/8-16X1 GR8 HEX ZINC PLT	5	
15		235723001	BOLT-3/8-16X1 1/2 GR8 ZINC PLT	4	
16		235734001	BOLT-1/4-20X3/4 GR8 ZINC PLTD	4	
17		235732001	NUT-1/4-20 GR8 ZINC PLTD	4	
18		291548001	BRACKET-LONG RADIATOR	1	
19		291547001	BRACKET-SHORT RADIATOR	1	
20		278850001	PLATE - SUPPORT MOUNT	1	
21		291540001	PLATE-RADIATOR TOP FILLER	1	
22		235726001	BOLT-3/8-16X3/4 GR8 HEX ZNCPLT	11	
23		278953001	ANCHOR - CABLE TIE	1	
24		59634001	NYTIE - 8”	1	
27		248197001	BOLT-1/4-20X2 GR.8 ZINC PLTD	4	
28		294553001	MOUNT-UPPER RADIATOR ISOLATOR	4	
29		291550001	SPACER-RADIATOR ISOLATOR	4	
30		294552001	MOUNT-LOWER RADIATOR ISOLATOR	4	
31		291549001	SPACER-LOWER ISOLATOR	4	
32		235741001	NUT-5/16-18 GR8 ZINC PLTD	1	

Air Cleaner Assembly Fig 3-10

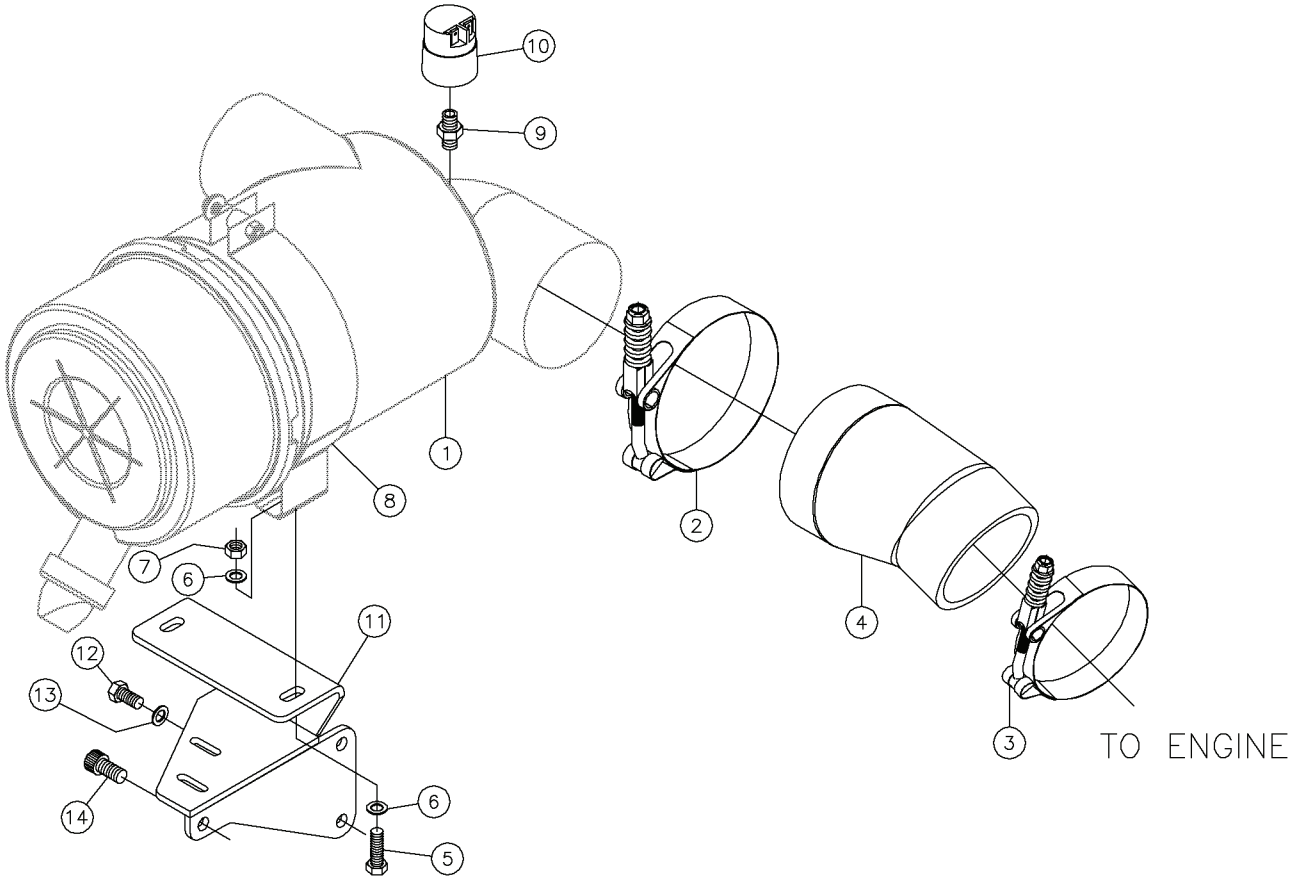

Air Cleaner Assembly Fig 3-10

REF. NO.	*	PART NO.	DESCRIPTION	QTY.	REMARKS
1		224847001	AIR CLEANER	1	(BREAKDOWN FIG 14-47)
2		100488001	CLAMP-AIR CLEANER T-BOLT 4”	1	
3		96072001	CLAMP-3 1/2” T-BOLT	1	
4		251197001	HOSE - AIR CLEANER	1	
5		238209001	BOLT-5/16-18X1 GR8 NEX ZINC YC	2	
6		235714001	WASHER-5/16 SAE HARD ZINC PLTD	4	
7		235741001	NUT-5/16-18 GR8 ZINC PLTD	2	
8		220167001	CLAMP-AIR CLEANER H00-2023	1	
9		66811001	FITTING - 1/8NPTX1/8NPT SAFETY	1	
10		251159001	INDICATOR-ELECTRICAL AIR RESTR	1	
11		251194001	MOUNT - AIR CLEANER	1	
12		508475020	SCREW-HCS,M8-1,25X20,10.9,YZ,ISO4017,FT.	2	
13		250517001	WASHER - 8MM HARD Y/ZINC	2	
14		281779001	BOLT -M10X16MM SOC HD CAP SCREW	1	

Muffler Assembly Fig 3-11

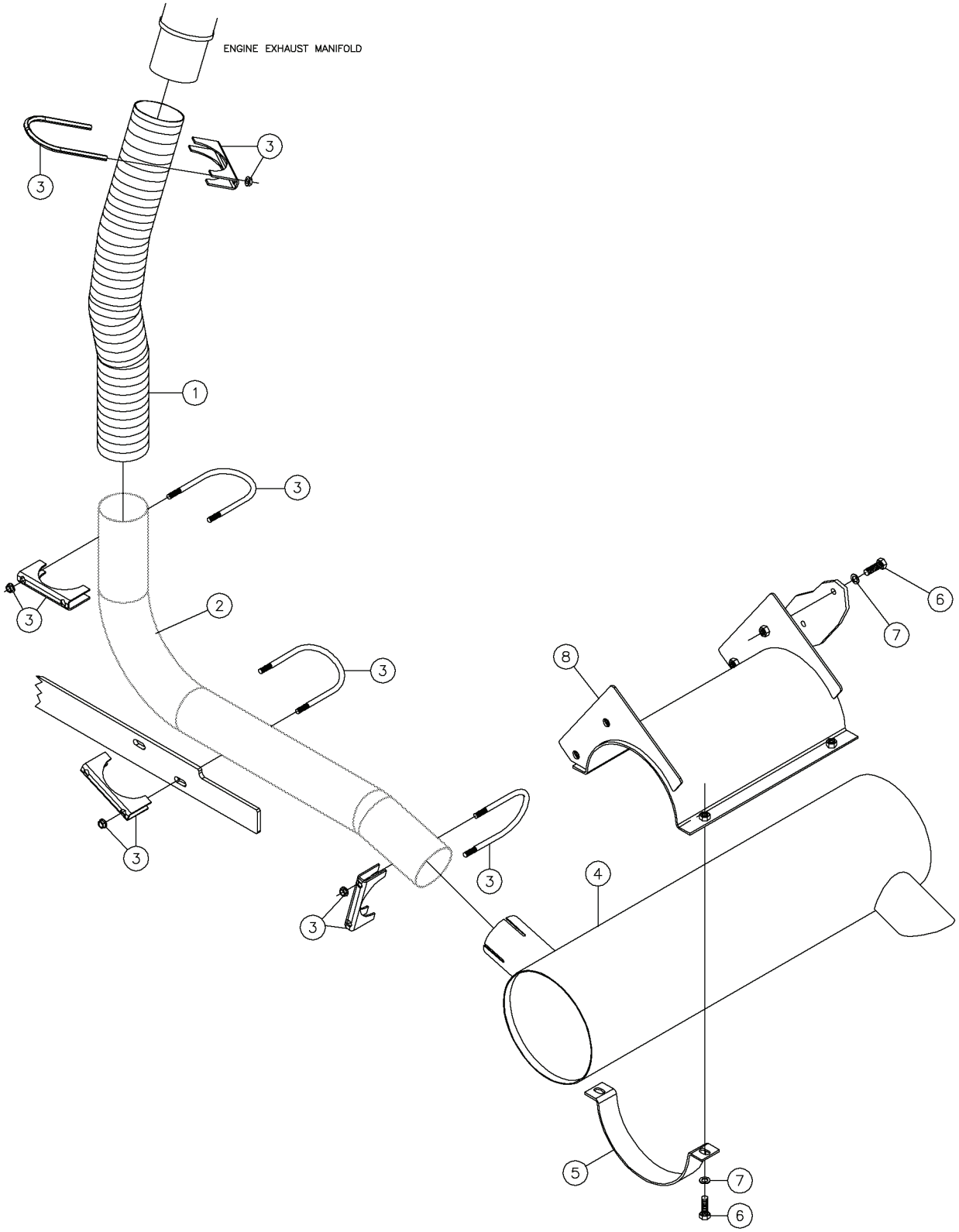

Muffler Assembly Fig 3-11

REF. NO.	*	PART NO.	DESCRIPTION	QTY.	REMARKS
1		278807001	TUBE - 3X 12 FLEX	1	
2		251235001	TUBE - LOWER EXHAUST	1	
3		2609011	MUFFLER CLAMP - 3”	4	
4		251236001	MUFFLER	1	
5		238625001	STRAP-MUFFLER CLAMP	2	
6		235736001	BOLT-3/8-16X1 1/4 ZINC PLTD	8	
7		235713001	WASHER-3/8 SAE HARD ZINC PLTD	8	
8		251183001	MOUNT - MUFFLER	1	

https://truckmanualshub.com/

Fuel Tank Assembly (15' Rack) Fig 3-12

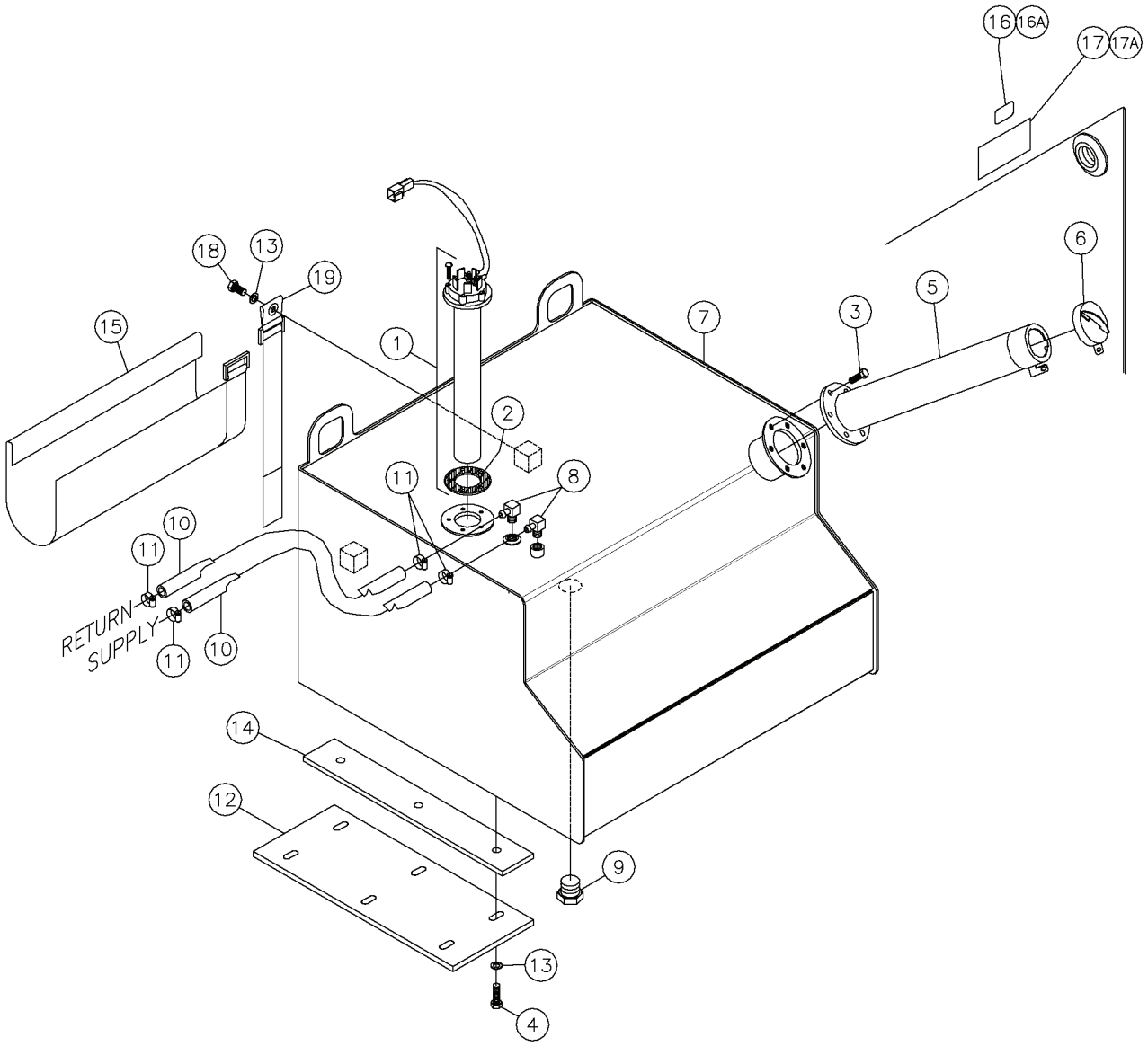

https://truckmanualshub.com/

Fuel Tank Assembly (15' Rack) Fig 3-12

REF. NO.	*	PART NO.	DESCRIPTION	QTY.	REMARKS
1		251139001	SENDER - FUEL LEVEL	1	
2		251538003	GASKET - FUEL SENDER	1	
3		235742001	BOLT-5/16-18X3/4 GR8 ZINC PLTD	6	
4		235736001	BOLT-3/8-16X1 1/4 ZINC PLTD	12	
5		294521001	NECK - FUEL FILL	1	
6		235909001	CAP-DIESEL FUEL (LOCKABLE)	1	
7		294516001	TANK - D33X44 DIESEL FUEL	1	
8		11384001	FITTING-1557 WTHR-HD	2	
9		67570001	PLUG - 12M	1	
10		620019	HOSE-5/16 FUEL LINE-70”	A/R	(SPECIFY LENGTH)
11		1578001	HOSE CLAMP - 1/4”	2	
12		277054001	PLATE-TANK STRAP	2	
13		235713001	WASHER-3/8 SAE HARD ZINC PLTD	14	
14		278788001	PAD - RUBBER ISOLATOR	2	
15		278899001	SLEEVE - HARNESS	1	
16		70000098	DECAL-DIESEL (AT/UND)	1	
16A		7000I098	DECAL-DIESEL FUEL	1	
17		2326324	DECAL-WARNING/REFUEL	1	
17A		2326I324	DECAL-WARNING	1	
18		235726001	BOLT-3/8-16X3/4 GR8 HEX ZNCPLT	2	
19		278901001	STRAP - HOSE SLEEVE HANGER	2	

Fuel Tank Assembly (10' Rack) Fig 3-13

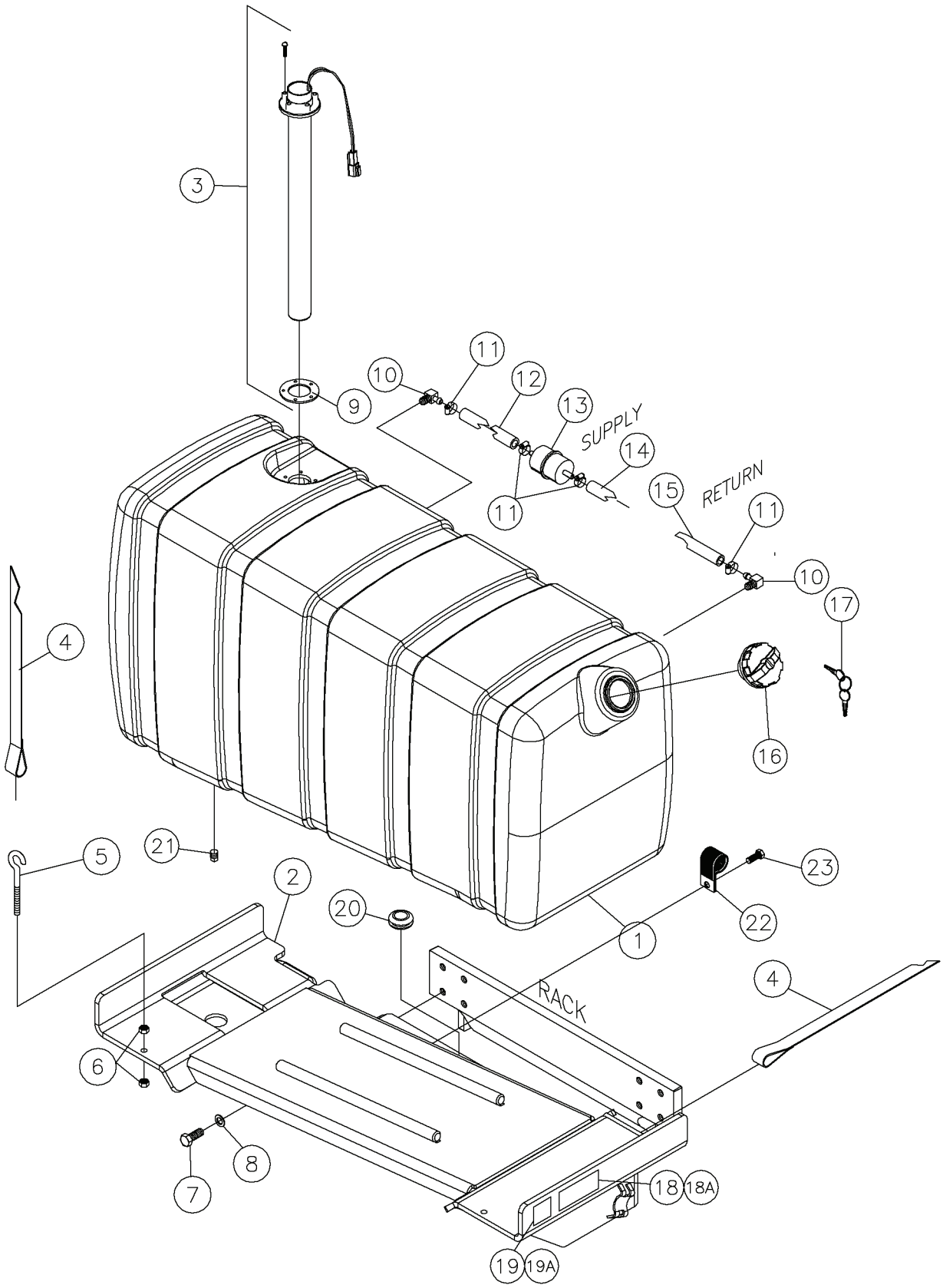

https://truckmanualshub.com/

Fuel Tank Assembly (10' Rack) Fig 3-13

REF. NO.	*	PART NO.	DESCRIPTION	QTY.	REMARKS
1		289602001	FUEL TANK	1	
2		292035001	WELDMENT - FUEL TANK SUPPORT	1	
3		292038001	SENDER - FUEL LEVEL	1	
4		287698001	STRAP - FUEL TANK	2	
5		279374001	BOLT - 3/8-16 X 5 1/2 EYE	2	
6		235725001	NUT-3/8-16 GR8 ZINC PLTD	4	
7		235737001	BOLT-1/2-13X1 1/4 GR8 ZINC PLT	8	
8		485025	WASHER-1/2 FLAT-HARDENED-ZINC	8	
9		251538003	GASKET - FUEL SENDER	1	
10		602037001	FITTING -1/4 PIPE 5/16 BARB 90	2	
11		1578001	HOSE CLAMP - 1/4”	4	
12		620001	HOSE - 5/16 FUEL LINE	A/R	(SPECIFY LENGTH)
13		102995001	STRAINER	1	
14		294629001	HOSE - 5/16 FUEL LINE - 140”	1	
15		294640001	HOSE - 5/16 FUEL LINE - 154”	1	
16		279326001	CAP - DIESEL FUEL W/LOCK	1	
17		279326003	KEY - FUEL CAP (PAIR)	1	
18		2326324	DECAL-WARNING/REFUEL	1	
18A		2326I324	DECAL-WARNING	1	
19		70000098	DECAL-DIESEL (AT/UND)	1	
19A		7000I098	DECAL-DIESEL FUEL	1	
20		1865009	GROMMET - 1.50ID X 2.13OD 1/4 GROOVE	1	
21		282126001	FITTING - 1/4 BRASS HEX PLUG	1	
22		204721001	HOSE CLAMP-CCV2913 1 3/4”	1	
23		235727001	BOLT-3/8-16X1 GR8 HEX ZINC PLT	1	

https://truckmanualshub.com/

Ether Starter System Assembly Fig 3-14

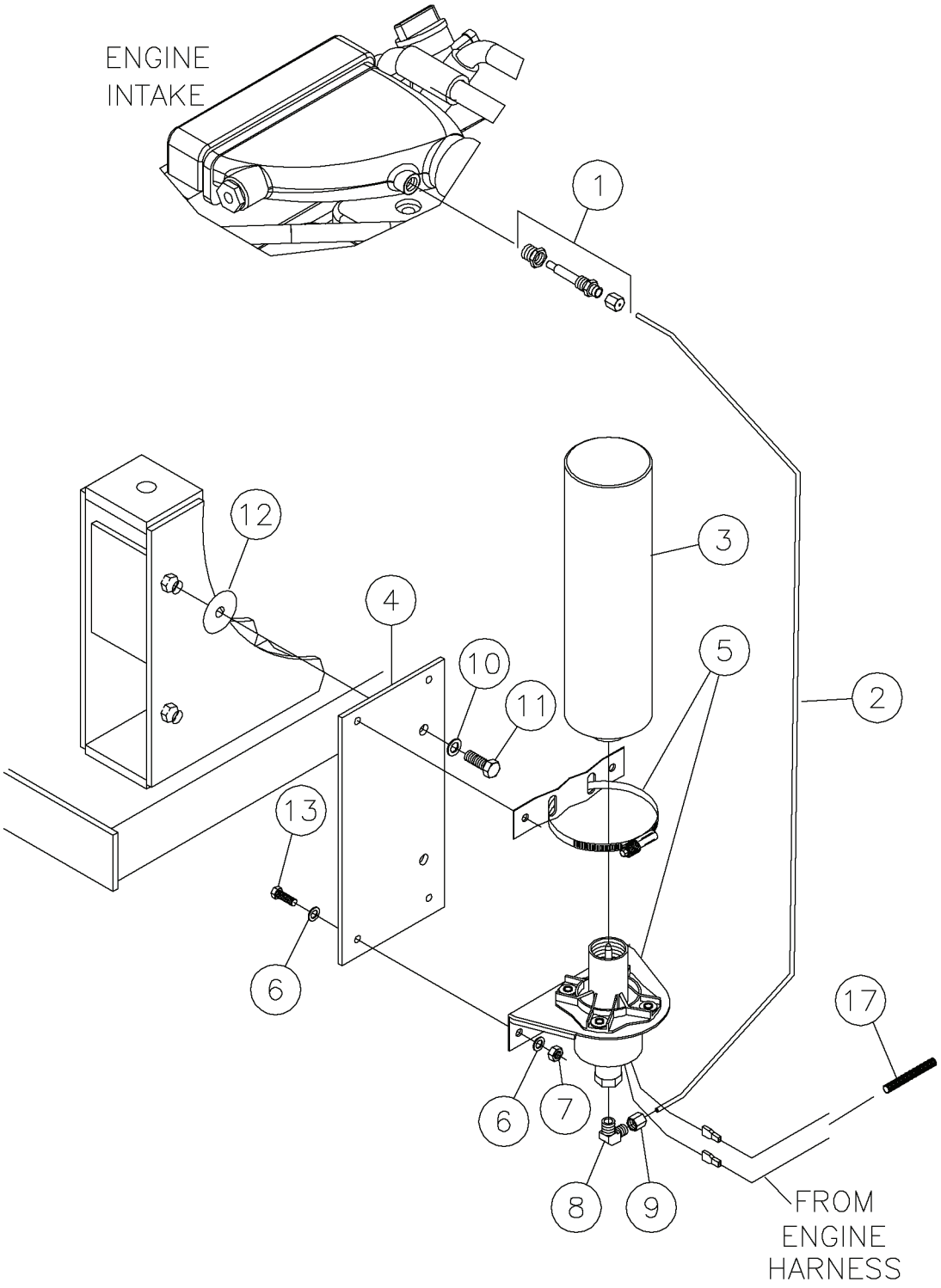

https://truckmanualshub.com/

Ether Starter System Assembly Fig 3-14

REF. NO.	*	PART NO.	DESCRIPTION	QTY.	REMARKS
1		223972001	ATOMIZER-START FLUID 2HOLE 180	1	
2		202831001	TUBING-NYLON 1/8OD X 100’	A/R	(SPECIFY LENGTH)
3		223973001	CYLINDER-START FLUID 18 OZ.	1	
4		281766001	PLATE - EHTER MOUNT	1	
5		250606001	ETHER AID KIT	1	
6		235716001	WASHER-1/4 SAE HARD ZINC PLTD	8	
7		235732001	NUT-1/4-20 GR8 ZINC PLTD	4	
8		125406003	FITTING	1	
9		125406005	FITTING ASSY - N/A	1	
10		235713001	WASHER-3/8 SAE HARD ZINC PLTD	2	
11		235727001	BOLT-3/8-16X1 GR8 HEX ZINC PLT	2	
12		277206001	WASHER - FLAT	2	
13		235734001	BOLT-1/4-20X3/4 GR8 ZINC PLTD	4	

https://truckmanualshub.com/

Hydraulic Component Location Diagram - Implement System (15' Rack) Fig 4-1

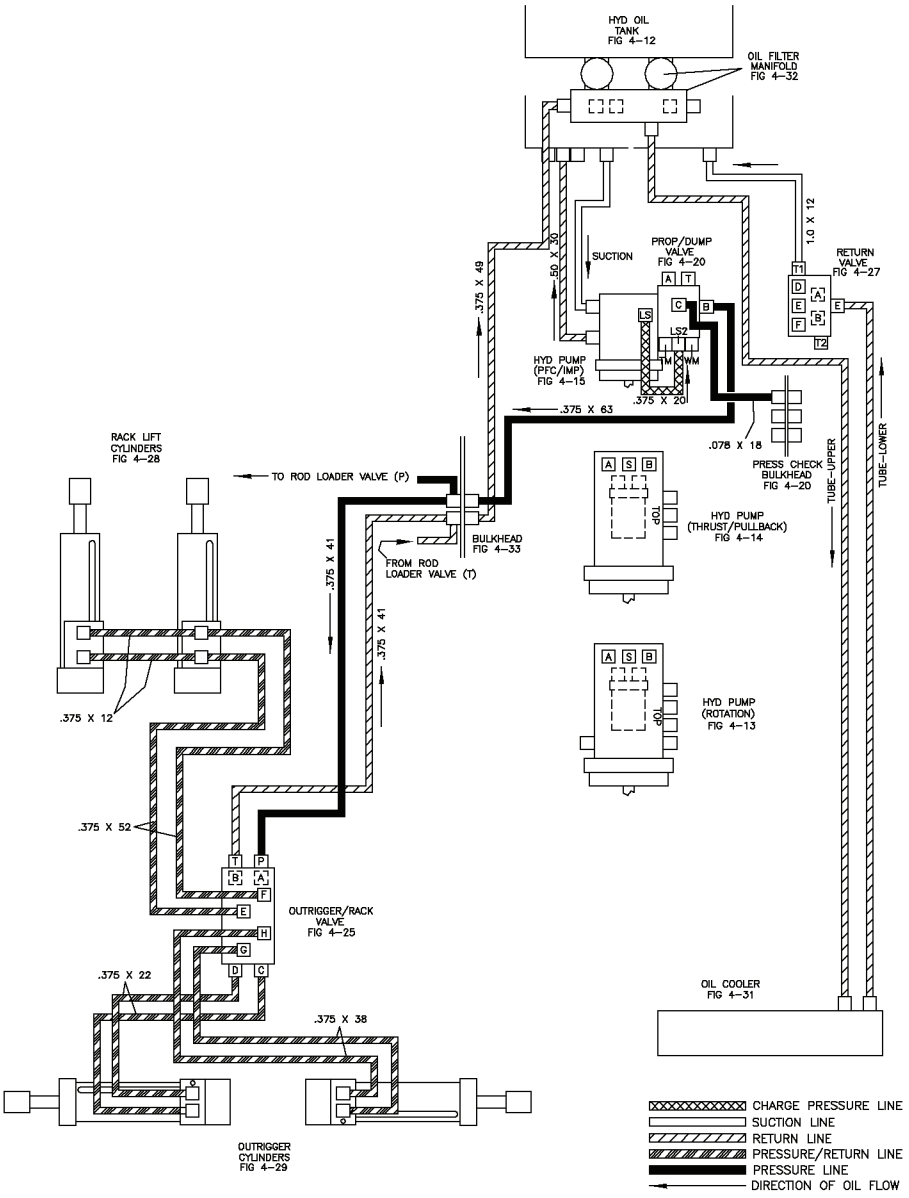

https://truckmanualshub.com/

Hydraulic Component Location Diagram - Implement System (15' Rack) Fig 4-1

REF. NO.	*	PART NO.	DESCRIPTION	QTY.	REMARKS

https://truckmanualshub.com/

Hydraulic Component Location Diagram - Implement System (10' Rack) Fig 4-2

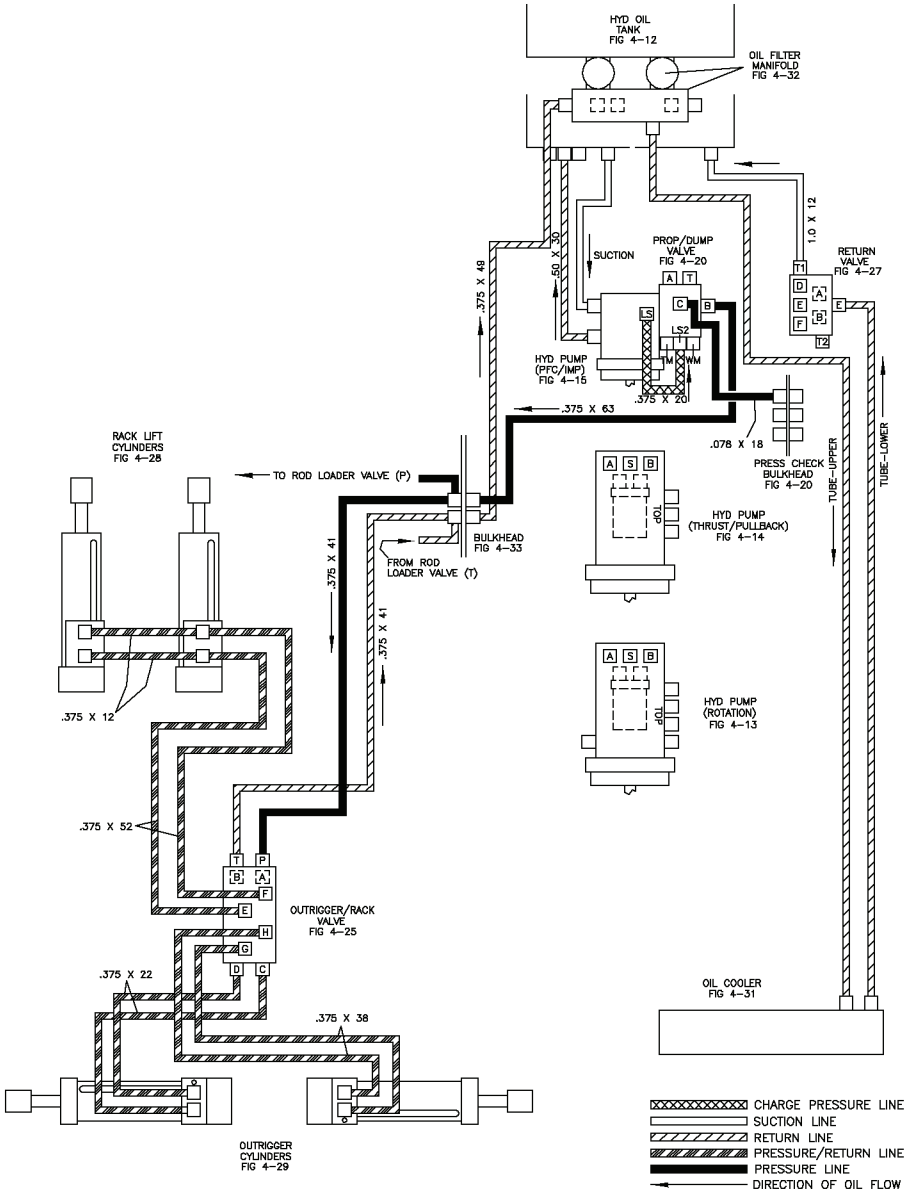

https://truckmanualshub.com/

Hydraulic Component Location Diagram - Implement System (10' Rack) Fig 4-2

REF. NO.	*	PART NO.	DESCRIPTION	QTY.	REMARKS

Hydraulic Component Location Diagram - Ground Drive (15' Rack) Fig 4-3

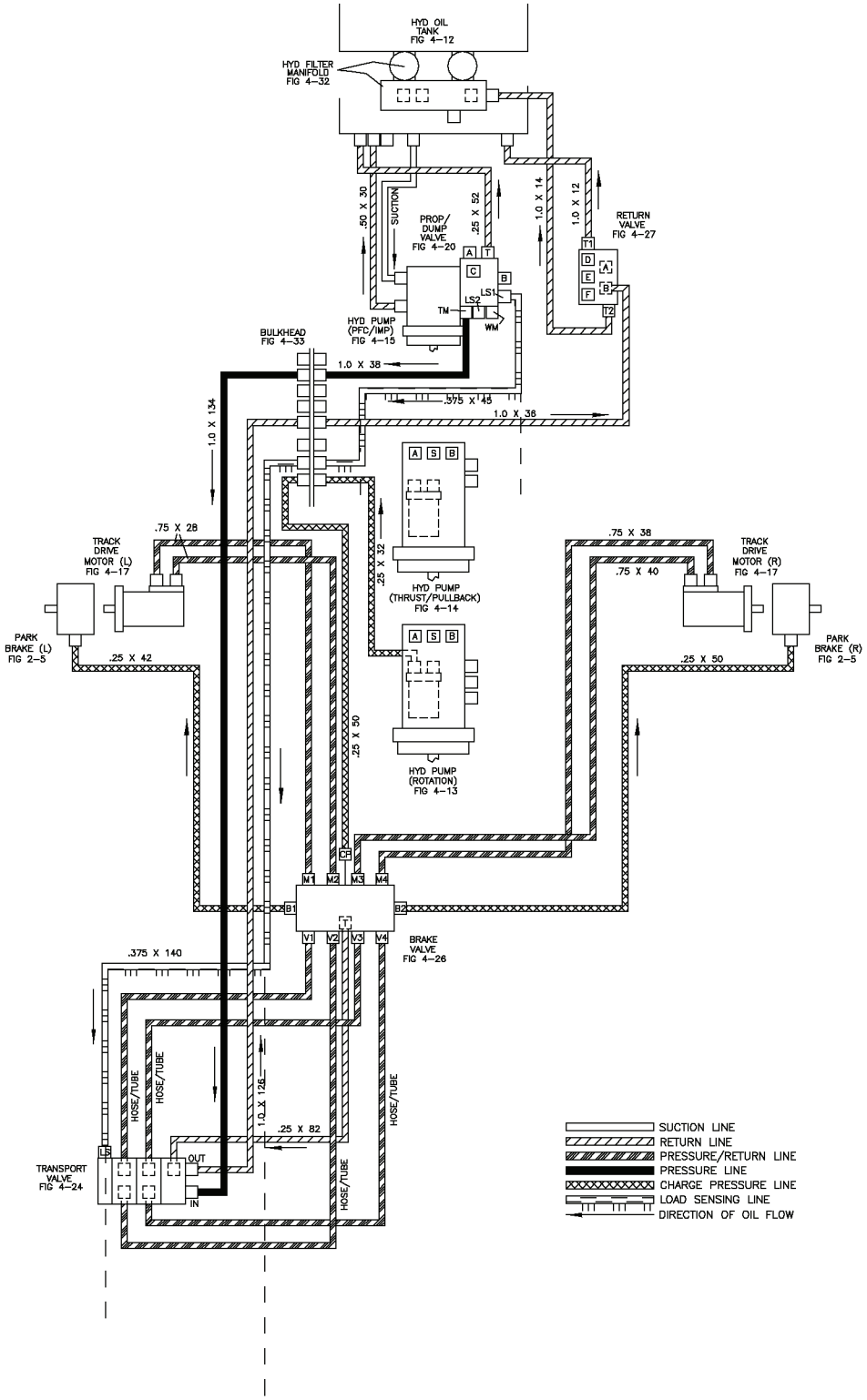

https://truckmanualshub.com/

Hydraulic Component Location Diagram - Ground Drive (15' Rack) Fig 4-3

REF. NO.	*	PART NO.	DESCRIPTION	QTY.	REMARKS

Hydraulic Component Location Diagram - Ground Drive (10' Rack) Fig 4-4

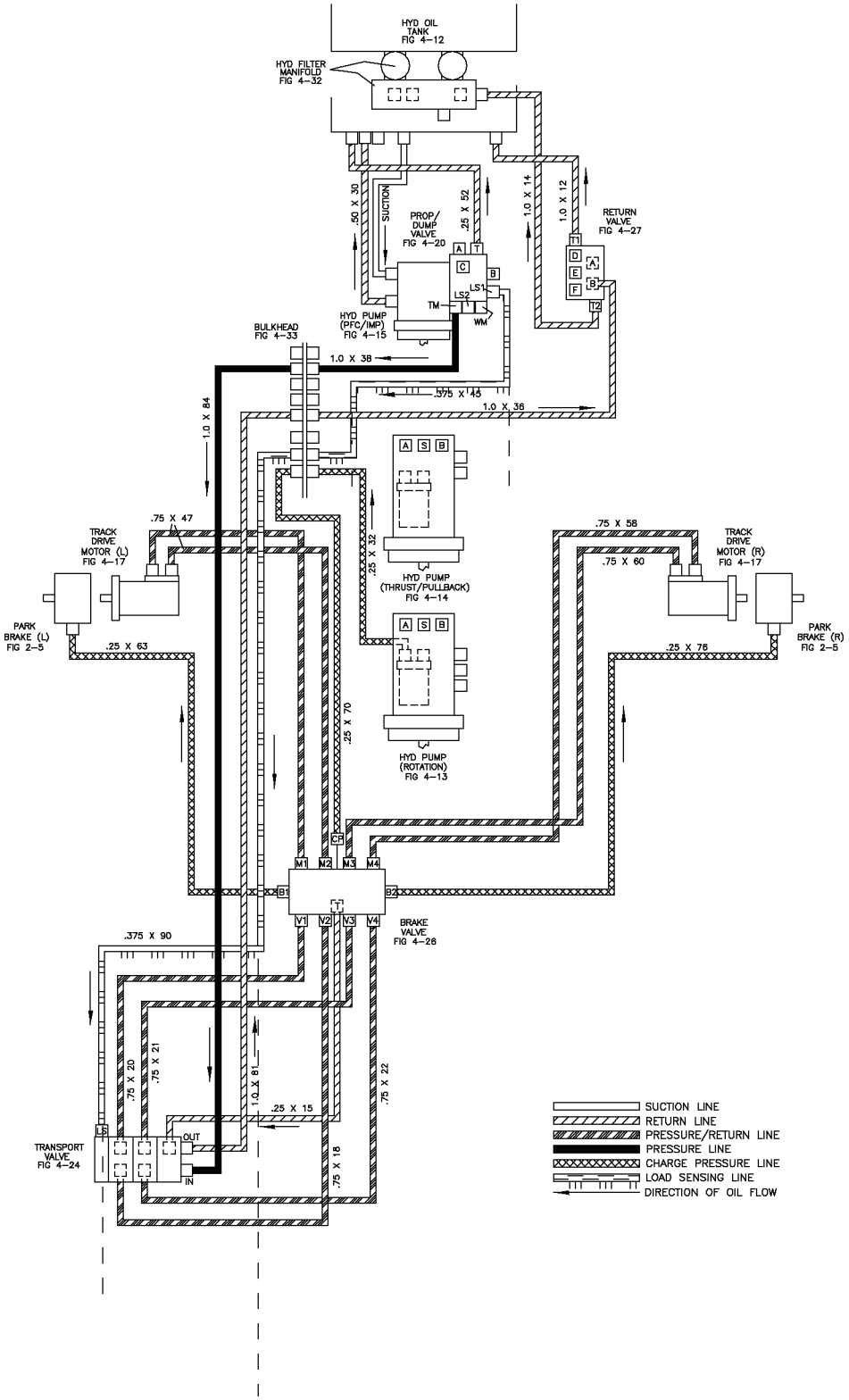

https://truckmanualshub.com/

Hydraulic Component Location Diagram - Ground Drive (10' Rack) Fig 4-4

REF. NO.	*	PART NO.	DESCRIPTION	QTY.	REMARKS

Hydraulic Component Location Diagram - Rotation System (15' Rack) Fig 4-5r01

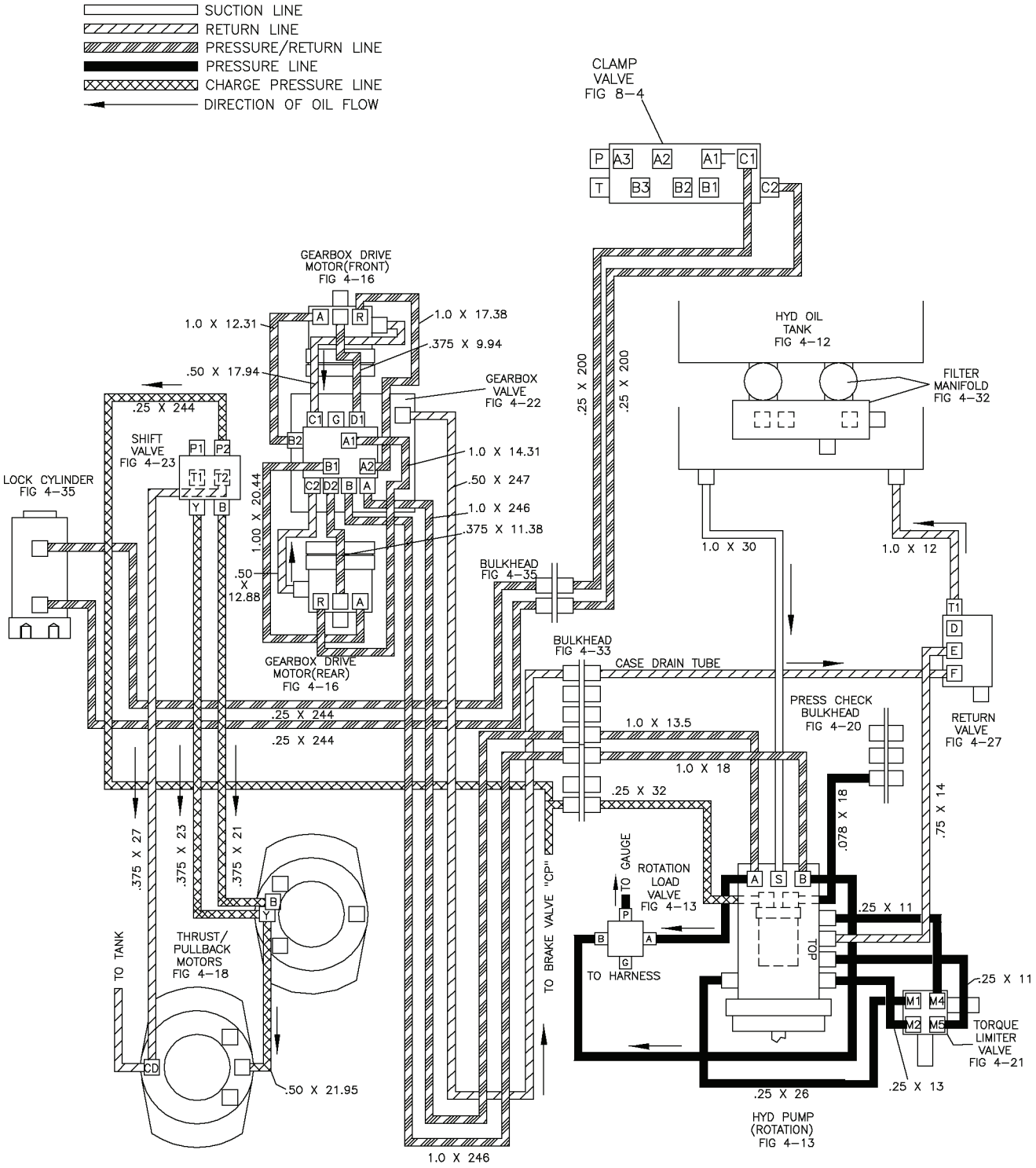

https://truckmanualshub.com/

Hydraulic Component Location Diagram - Rotation System (15' Rack) Fig 4-5r01

REF. NO.	*	PART NO.	DESCRIPTION	QTY.	REMARKS
		Revision Date	June, 2004		Update In Illustration.

Hydraulic Component Location Diagram - Rotation System (15' Rack) Fig 4-5

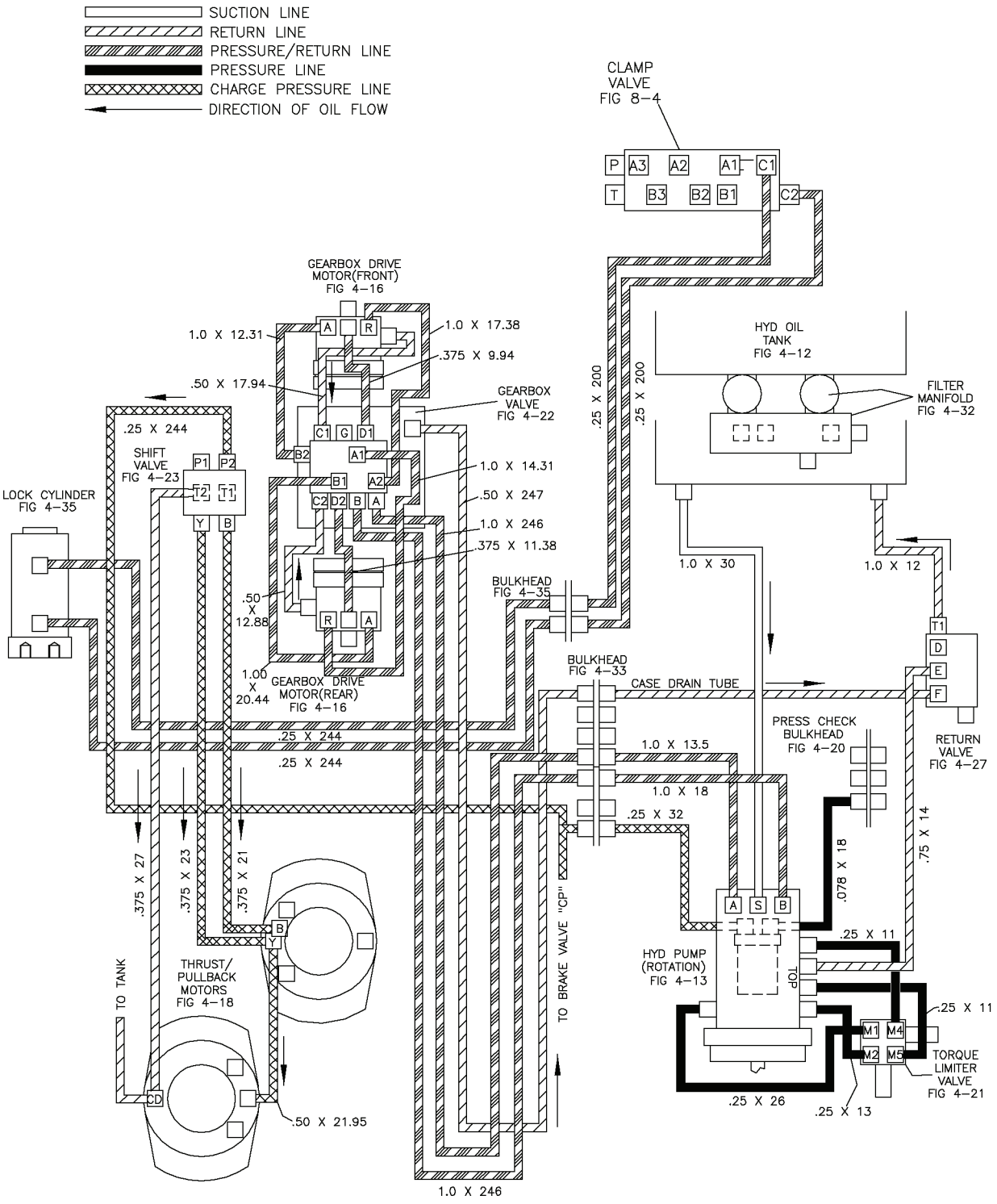

https://truckmanualshub.com/

Hydraulic Component Location Diagram - Rotation System (15' Rack) Fig 4-5

REF. NO.	*	PART NO.	DESCRIPTION	QTY.	REMARKS

Hydraulic Component Location Diagram - Rotation System (10' Rack) Fig 4-6r01

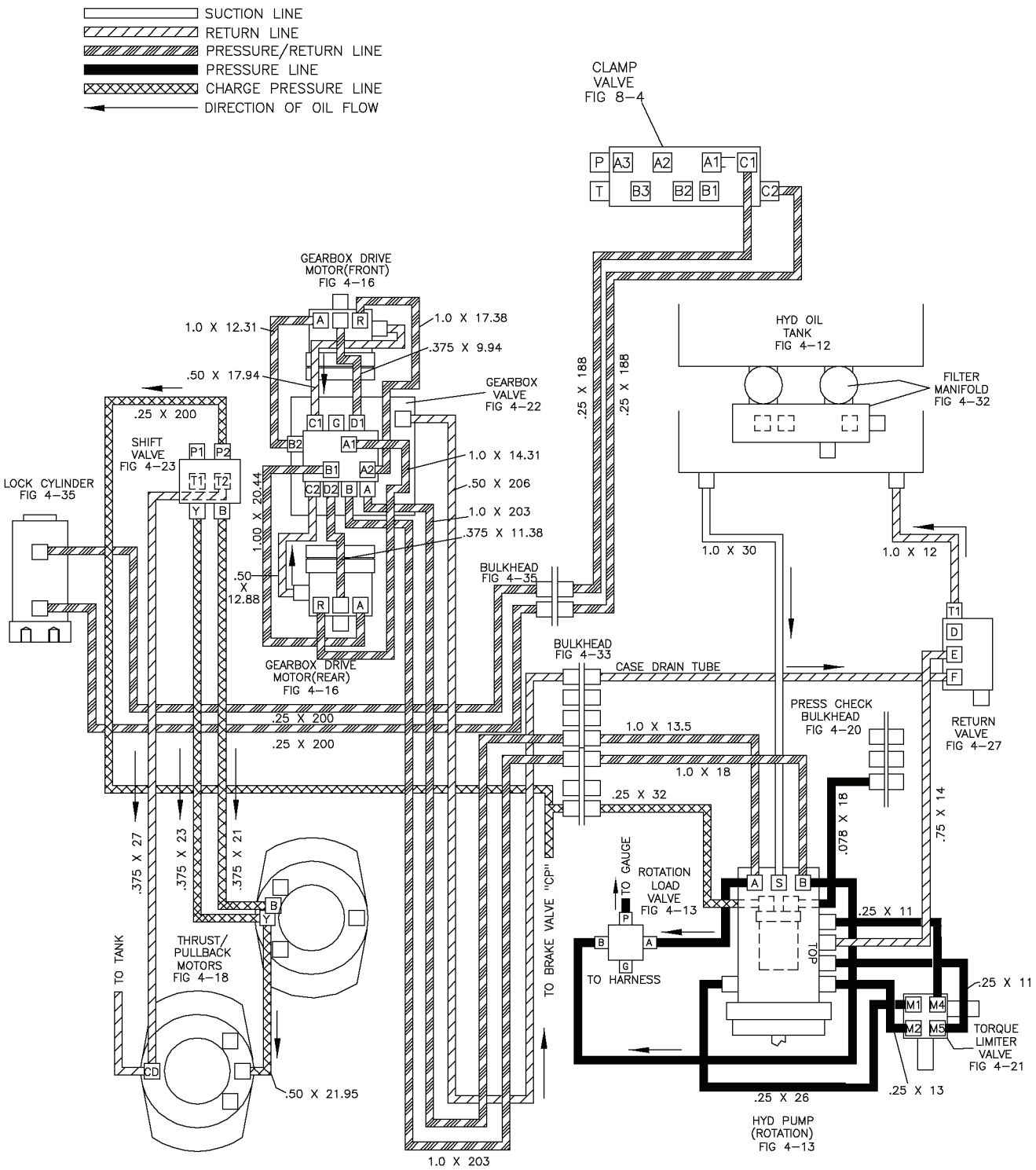

https://truckmanualshub.com/

Hydraulic Component Location Diagram - Rotation System (10' Rack) Fig 4-6r01

REF. NO.	*	PART NO.	DESCRIPTION	QTY.	REMARKS
		Revision Date	June, 2004		Update In Illustration.

https://truckmanualshub.com/

Hydraulic Component Location Diagram - Rotation System (10' Rack) Fig 4-6

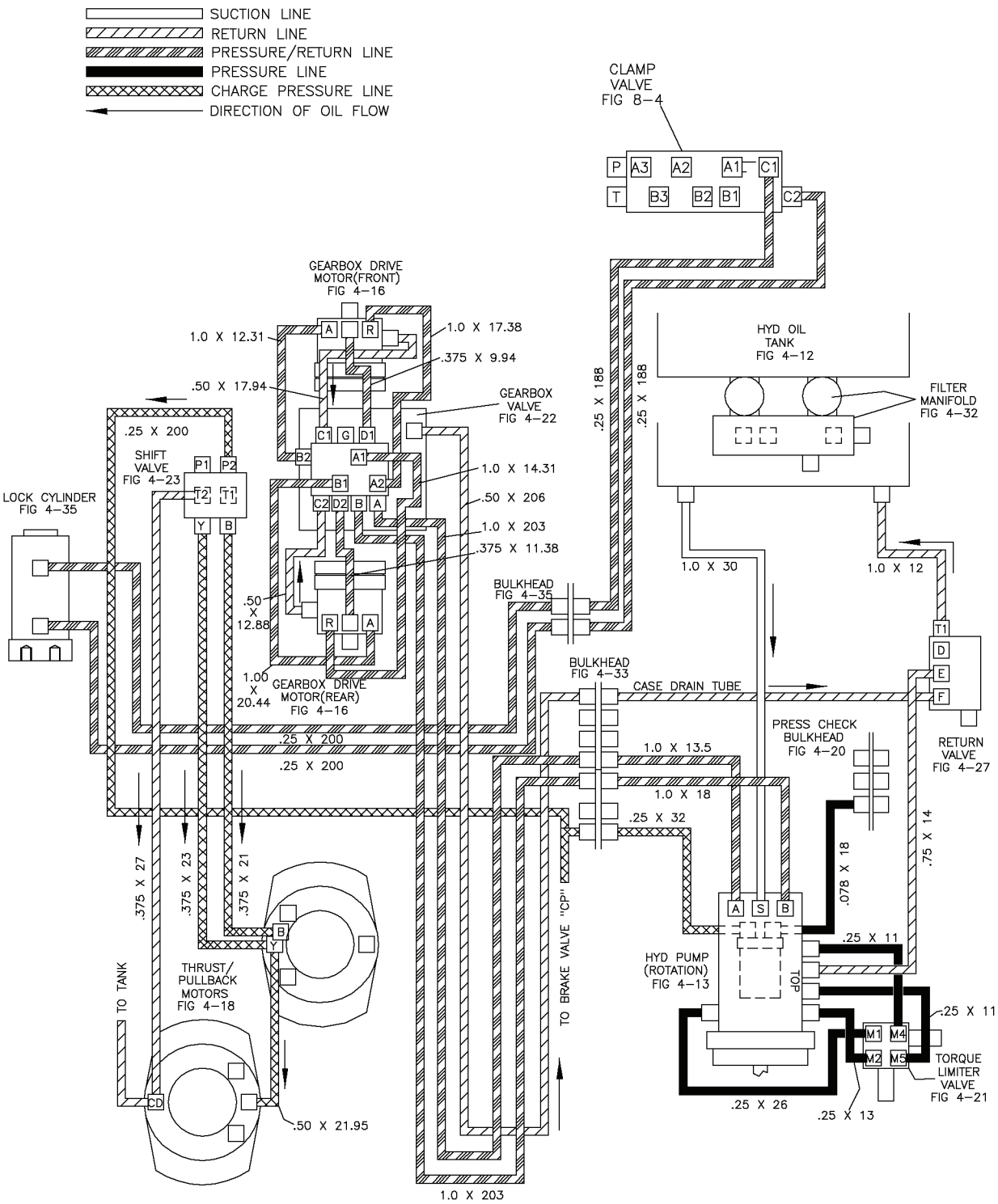

https://truckmanualshub.com/

Hydraulic Component Location Diagram - Rotation System (10' Rack) Fig 4-6

REF. NO.	*	PART NO.	DESCRIPTION	QTY.	REMARKS

https://truckmanualshub.com/

Hydraulic Component Location Diagram - Thrust/Pullback System (15' Rack) Fig 4-7r01

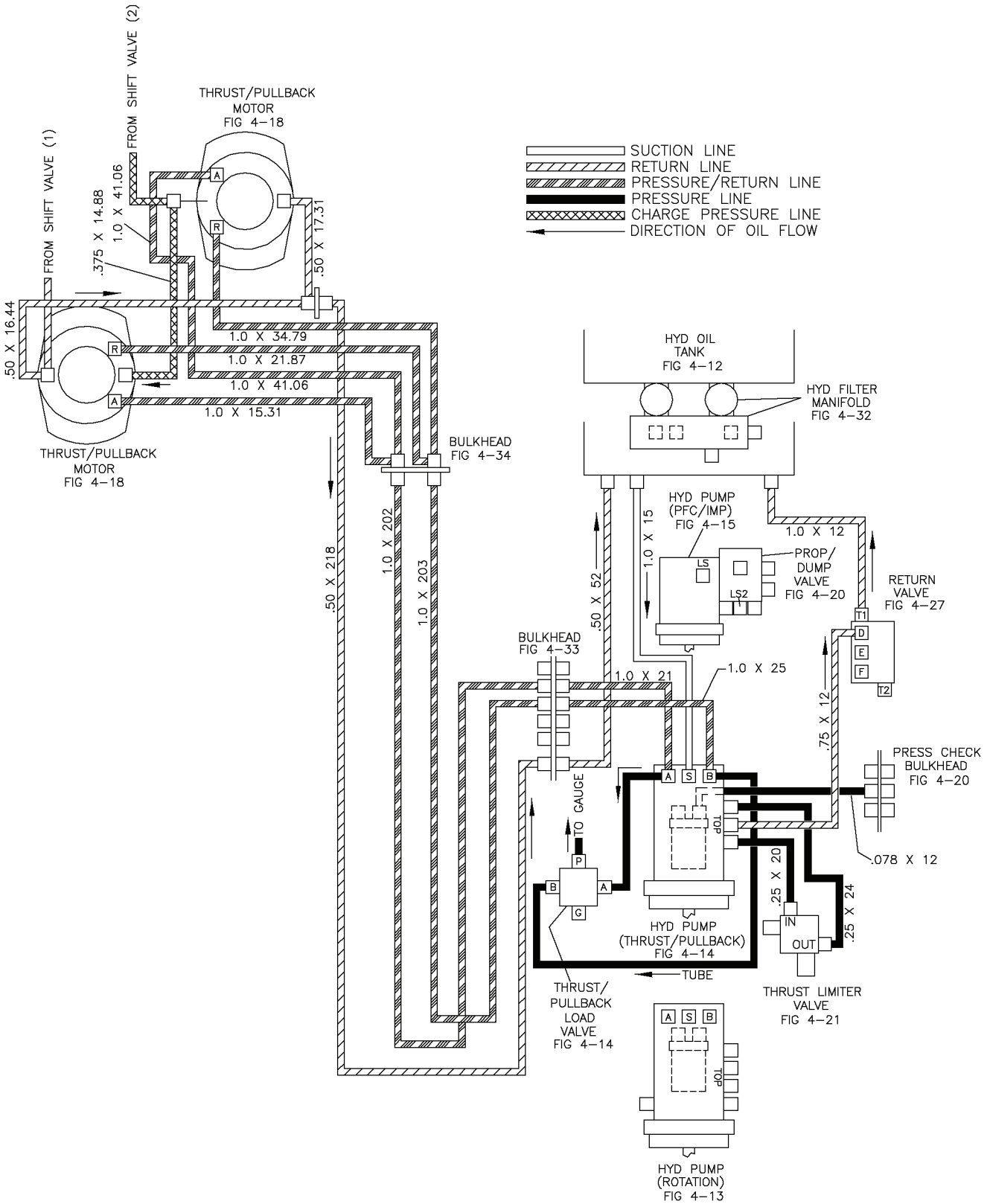

https://truckmanualshub.com/

Hydraulic Component Location Diagram - Thrust/Pullback System (15' Rack) Fig 4-7r01

REF. NO.	*	PART NO.	DESCRIPTION	QTY.	REMARKS
		Revision Date	June, 2004		Update In Illustration.

https://truckmanualshub.com/

Hydraulic Component Location Diagram - Thrust/Pullback System (15' Rack) Fig 4-7

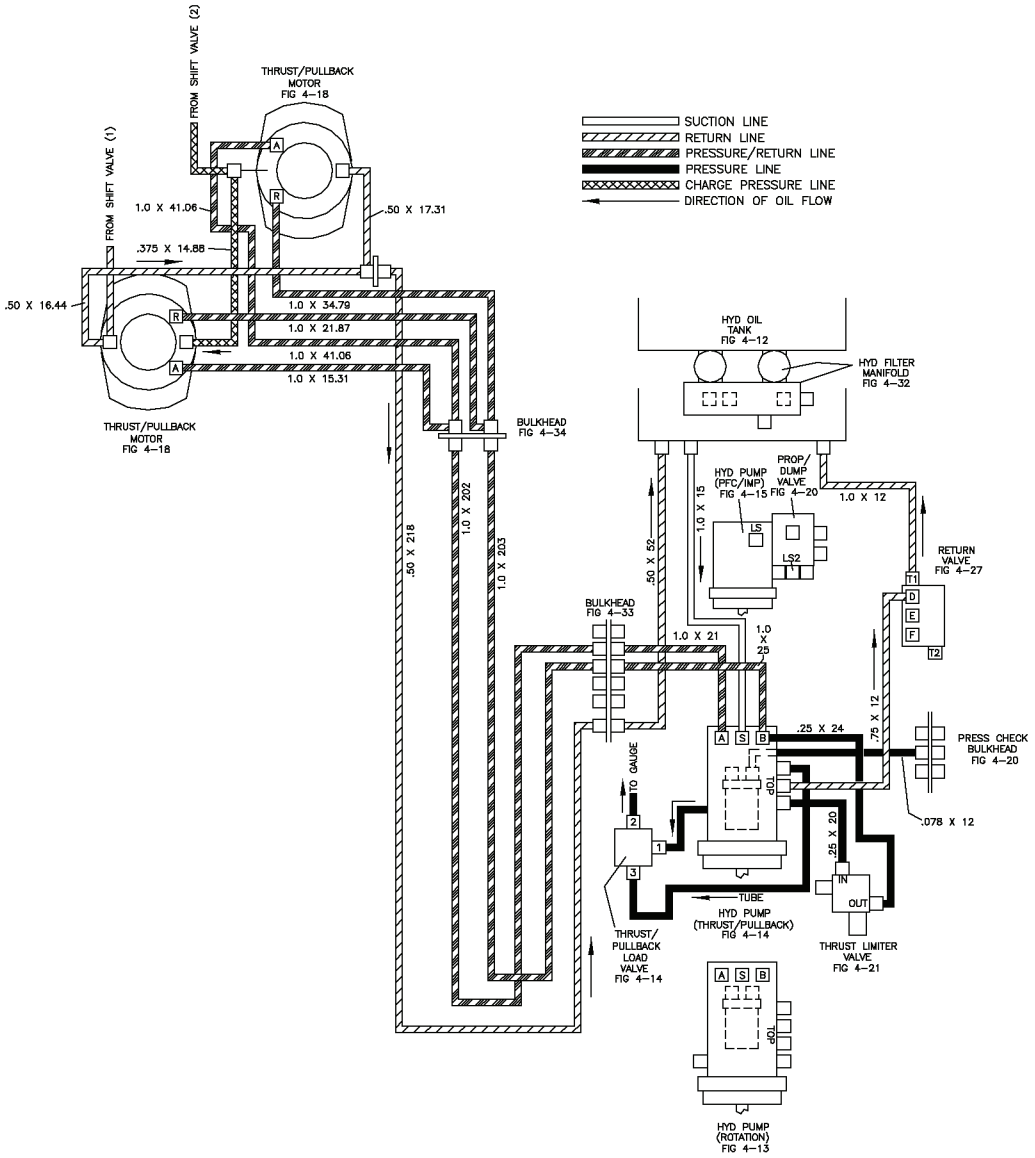

https://truckmanualshub.com/

Hydraulic Component Location Diagram - Thrust/Pullback System (15' Rack) Fig 4-7

REF. NO.	*	PART NO.	DESCRIPTION	QTY.	REMARKS

https://truckmanualshub.com/

Hydraulic Component Location Diagram - Thrust/Pullback System (10' Rack) Fig 4-8r01

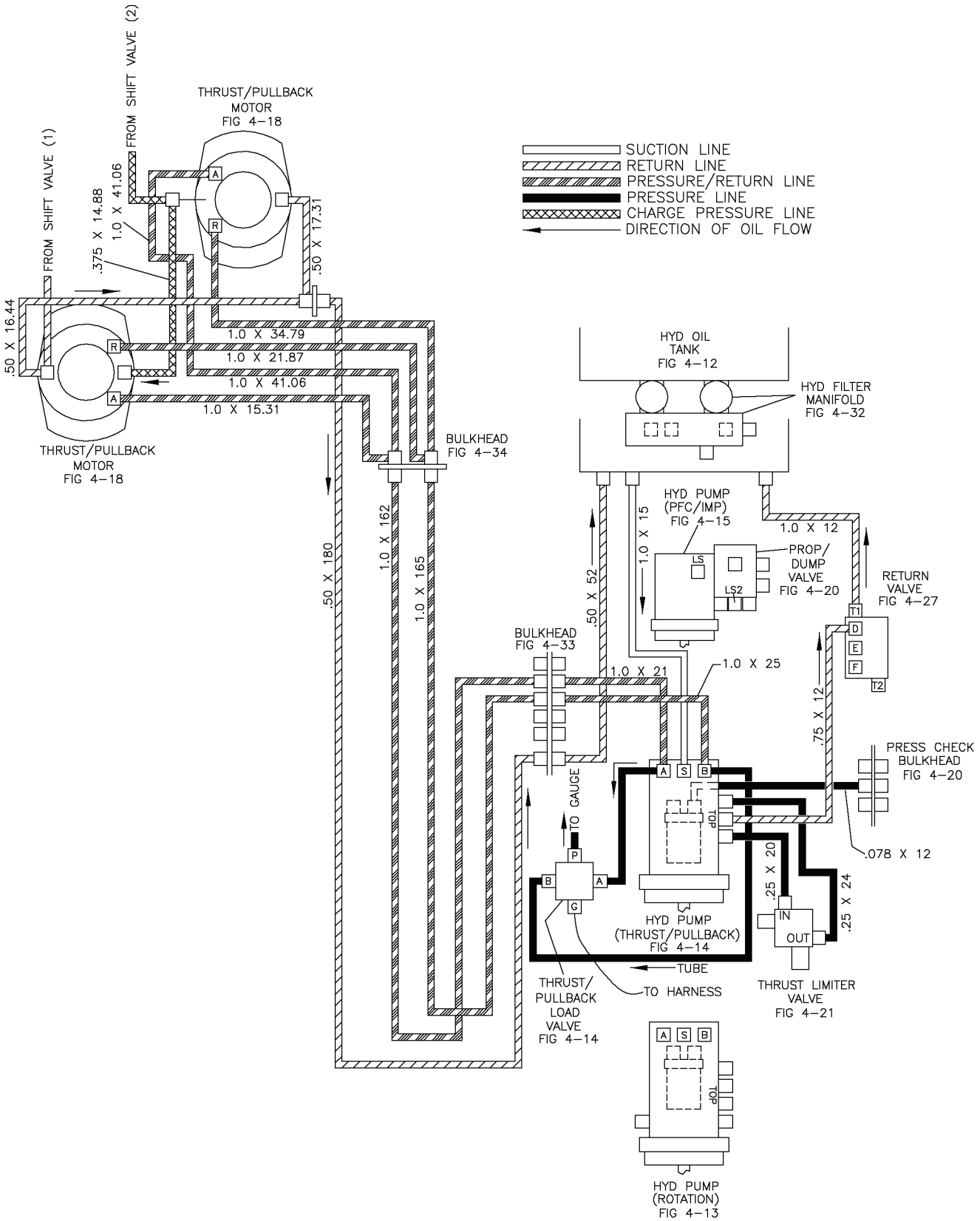

https://truckmanualshub.com/

Hydraulic Component Location Diagram - Thrust/Pullback System (10' Rack) Fig 4-8r01

REF. NO.	*	PART NO.	DESCRIPTION	QTY.	REMARKS
		Revision Date	June, 2004		Update In Illustration.

https://truckmanualshub.com/

Hydraulic Component Location Diagram - Thrust/Pullback System (10' Rack) Fig 4-8

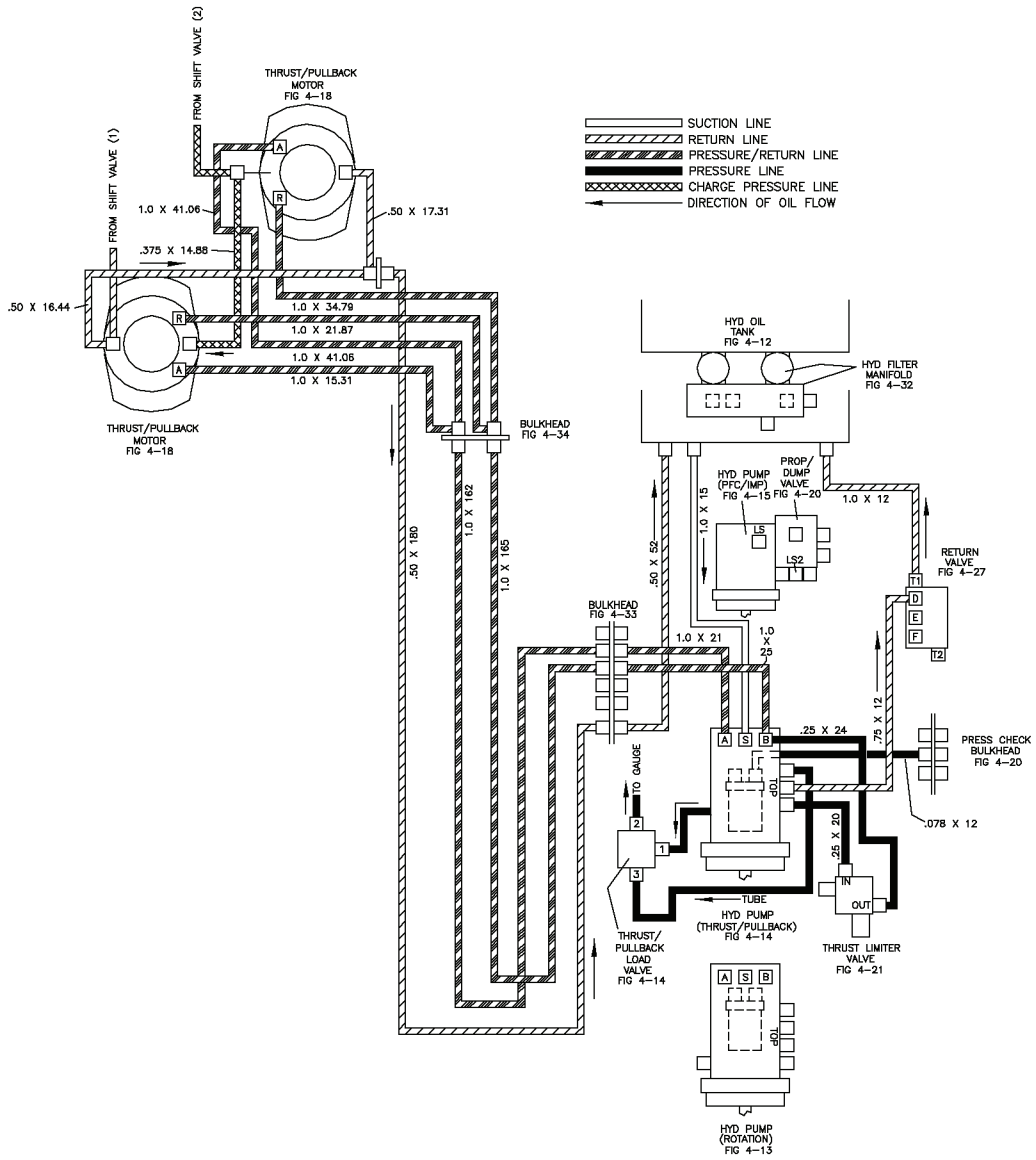

https://truckmanualshub.com/

Hydraulic Component Location Diagram - Thrust/Pullback System (10' Rack) Fig 4-8

REF. NO.	*	PART NO.	DESCRIPTION	QTY.	REMARKS

Hydraulic Component Location Diagram - Water System (15' Rack) Fig 4-9

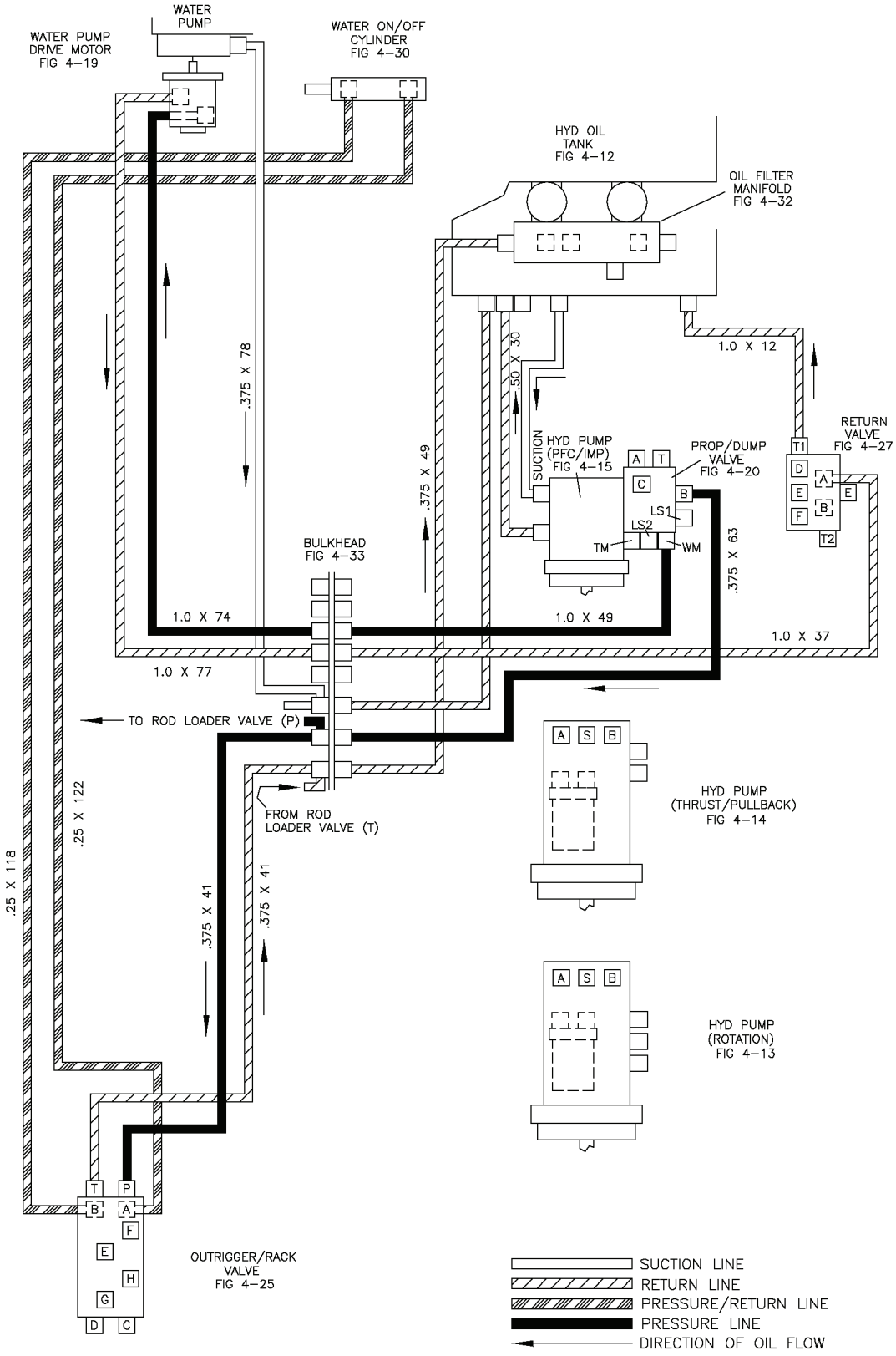

https://truckmanualshub.com/

Hydraulic Component Location Diagram - Water System (15' Rack) Fig 4-9

REF. NO.	*	PART NO.	DESCRIPTION	QTY.	REMARKS

Hydraulic Component Location Diagram - Water System (10' Rack) Fig 4-10

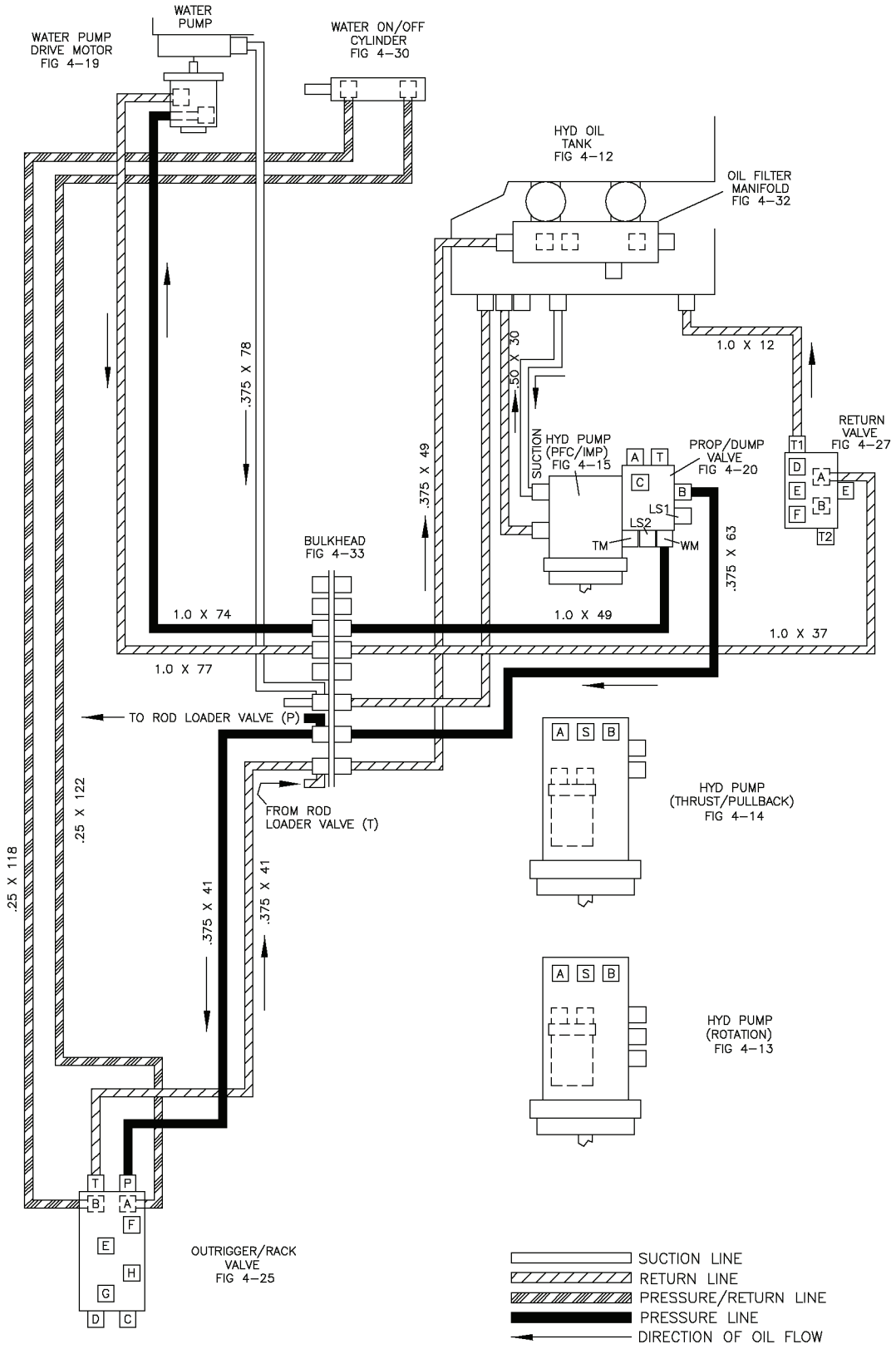

https://truckmanualshub.com/

Hydraulic Component Location Diagram - Water System (10' Rack) Fig 4-10

REF. NO.	*	PART NO.	DESCRIPTION	QTY.	REMARKS

https://truckmanualshub.com/

Hydraulic Component Location Diagram - Auto Greaser Fig 4-11r01

FIGURE DELETED DUE TO UPDATE

https://truckmanualshub.com/

Hydraulic Component Location Diagram - Auto Greaser Fig 4-11r01

REF. NO.	*	PART NO.	DESCRIPTION	QTY.	REMARKS
		Revision Date	June, 2004		Deleted From Manual

https://truckmanualshub.com/

Hydraulic Component Location Diagram - Auto Greaser Fig 4-11

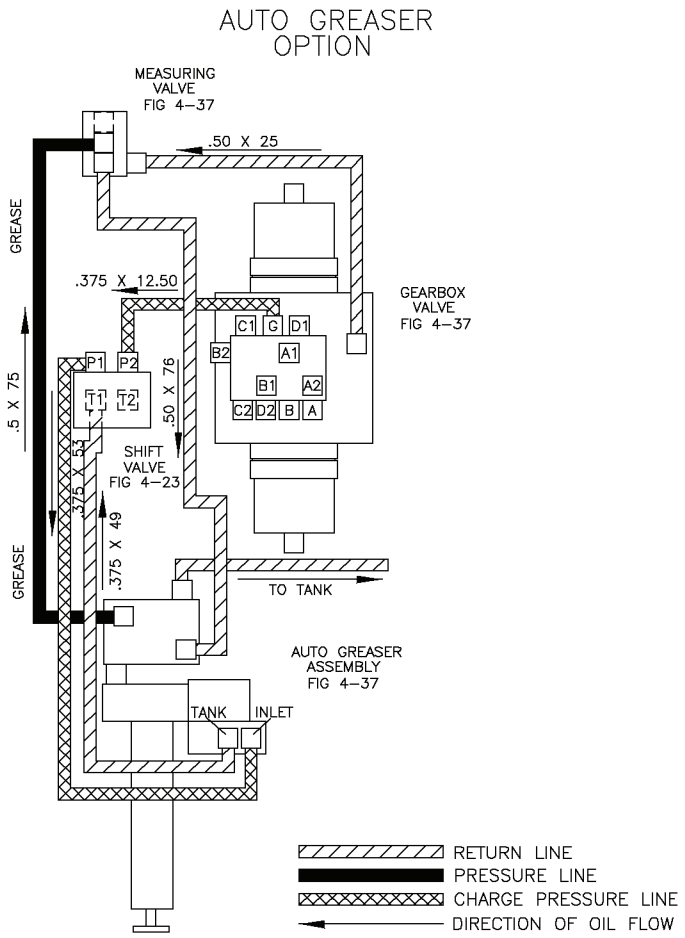

https://truckmanualshub.com/

Hydraulic Component Location Diagram - Auto Greaser Fig 4-11

REF. NO.	*	PART NO.	DESCRIPTION	QTY.	REMARKS

https://truckmanualshub.com/

Hydraulic Oil Tank Assembly Fig 4-12r01

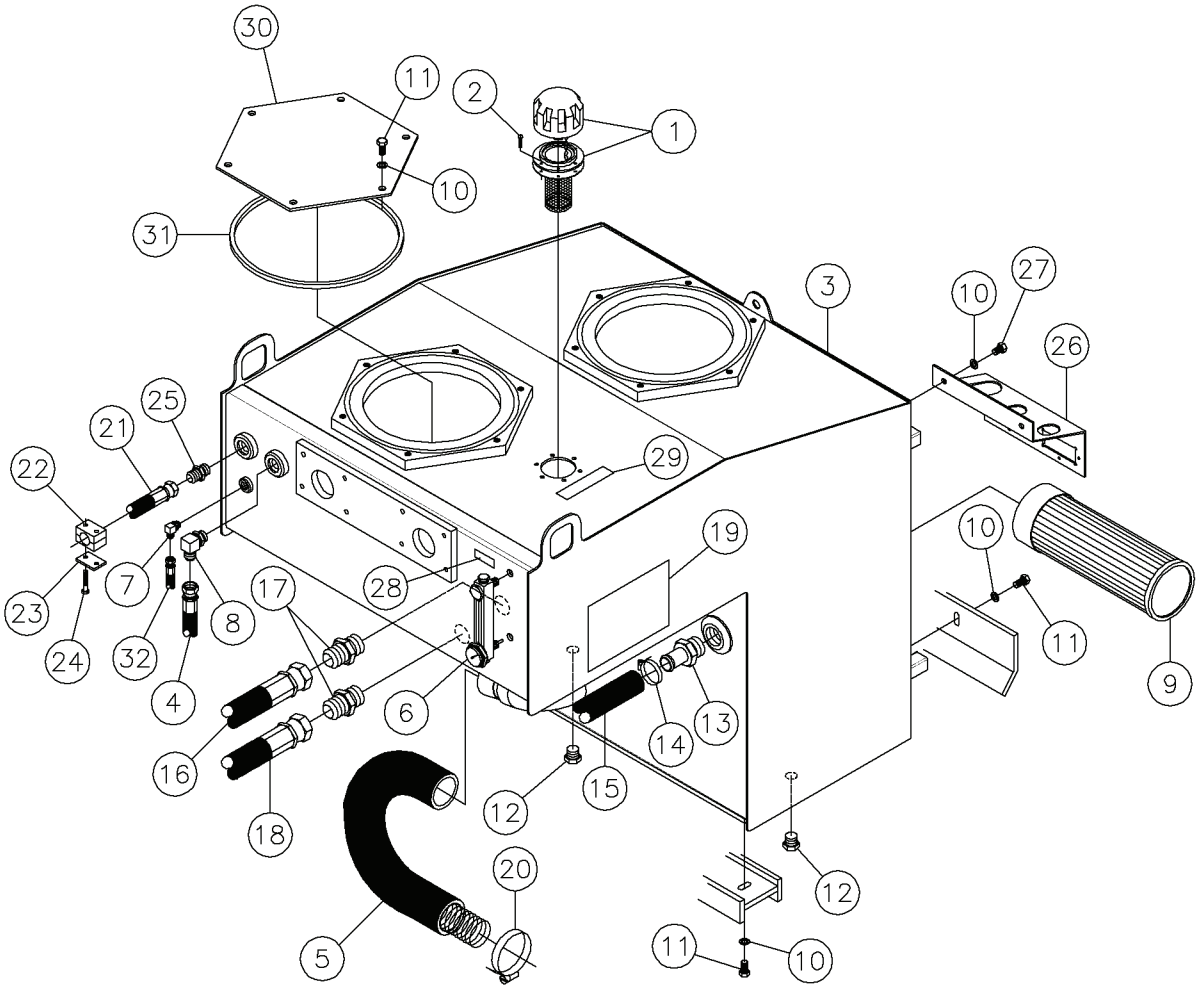

https://truckmanualshub.com/

Hydraulic Oil Tank Assembly Fig 4-12r01

REF. NO.	*	PART NO.	DESCRIPTION	QTY.	REMARKS
		Revision Date	June, 2004		Update In Illustration & Parts List.
1		235808001	CAP-FILLER/BREATHER W/O RELIEF	1	
2		1802006	BOLT-10-24 X 3/4 RND HD STOVE	6	
3		251453003	TANK - OIL	1	
4		53844403	HOSE-1/2X30 8FS JIC/8FS JIC 90	1	
5		251243001	HOSE - PUMP SUCTION	1	
6		81590001	GAUGE-SIGHT	1	
7		59423001	FIT-4M JICX4M ADJ.90 DEG.ELBOW	1	
8		53837001	FITTING - 8M O-RING X 8M JIC 90 DEGREE	1	
9		98681001	FILTER-TANK 3 NPT OUTLET PORT	1	
10		235713001	WASHER - FLATSTRL - .38 - .41 X .81 - .06-YA-A325	32	
11		235726001	BOLT-3/8-16X3/4 GR8 HEX ZNCPLT	30	
12		56218001	FITTING - PLUG - 8MORB - HEX	2	
13		96709001	HOSE INSERT-16MX1 BEAD STR.	1	
14		1580005	HOSE CLAMP - 1”	1	
15		278794001	HOSE-1X12 W/ NO ENDS 250 PSI	1	
16		278993001	HOSE - 1 X 15 16FSJIC ST/90 250PSI	1	
17		60907001	FITTING-16M JICX16M STR ADAPT	2	
18		278806001	HOSE-1X30 16FSJIC ST/90 250PSI	1	
19		7000B294	DECAL - FLUIDS	1	
20		1580013	HOSE CLAMP - 2 1/2”	2	
21		53844317	HOSE-1/2X52 8FS JIC 3000 PSI	1	
22		901678005	CLAMP-HOSE 30840-PP	2	
23		901678007	PLATE-COVER COP-3	1	
24		238210001	BOLT - 1/4-20X1 1/2 GR8 HEX ZYC	1	
25		53824001	FITTING-#8M O-RING-#8M JIC ST.	1	
26		277693001	MOUNT - HARNESS	1	
27		240310001	SCREW - HCS - .38 - 16 X .50 - GR8 - YZ	2	
28		2326756	DECAL-HYDRAULIC OIL	1	DOM.
28A		2326I756	DECAL-HYDRAULIC FLUID	1	INTL.
29		70000394	DECAL-VERMEER HY POWER	1	
30		96291001	PLATE-CLEANOUT PORT	3	
31		78544001	O-RING AS-378 B46	3	
32		53843679	HOSE-1/4X52 4FS JIC 2500 PSI	1	

https://truckmanualshub.com/

Hydraulic Oil Tank Assembly Fig 4-12

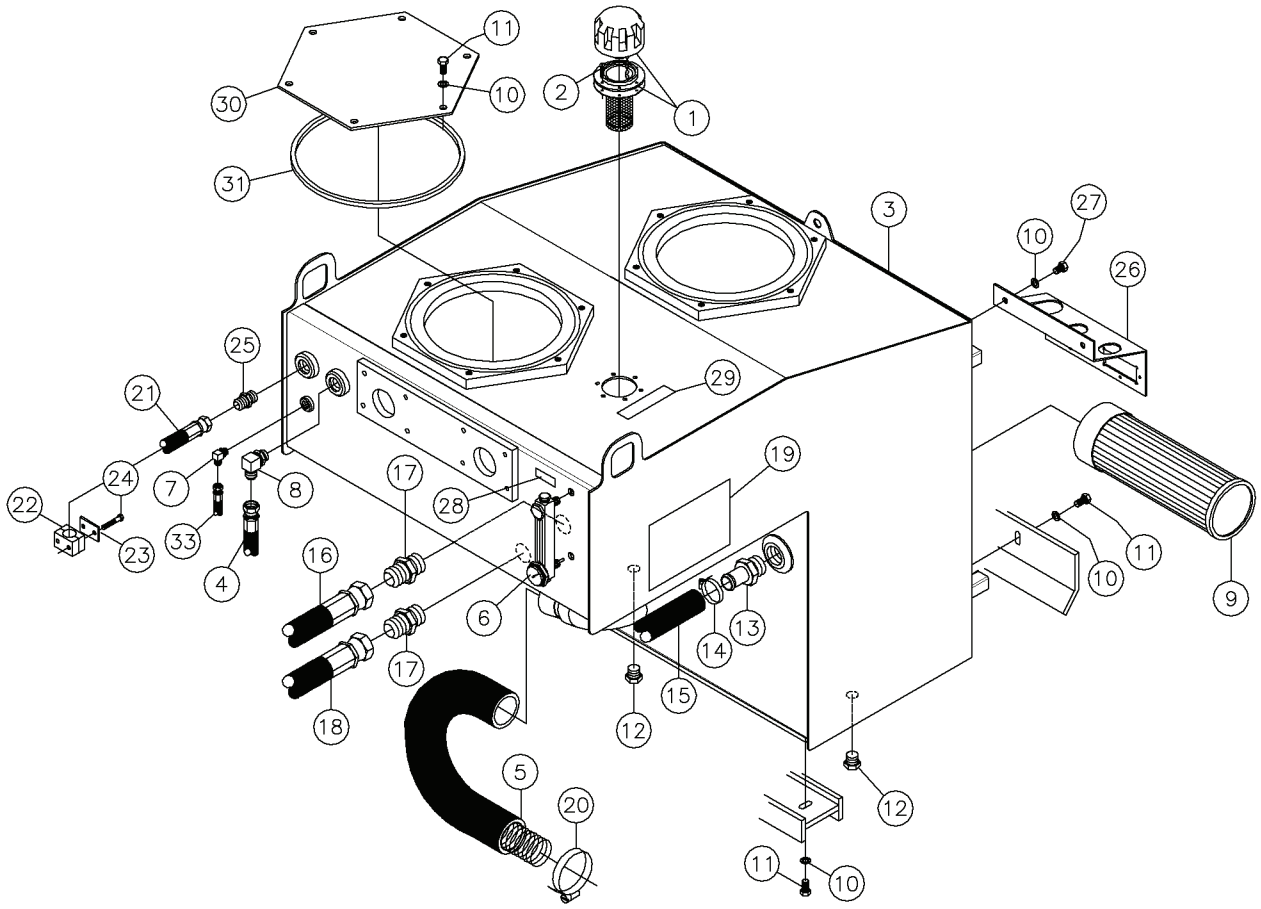

Hydraulic Oil Tank Assembly Fig 4-12

REF. NO.	*	PART NO.	DESCRIPTION	QTY.	REMARKS
1		235808001	CAP-FILLER/BREATHER W/O RELIEF	1	
2		1802006	BOLT-10-24 X 3/4 RND HD STOVE	6	
3		251453003	TANK - OIL	1	
4		53844403	HOSE-1/2X30 8FS JIC/8FS JIC 90	1	
5		251243001	HOSE - PUMP SUCTION	1	
6		81590001	GAUGE-SIGHT	1	
7		59423001	FIT-4M JICX4M ADJ.90 DEG.ELBOW	1	
8		53837001	FITTING - 8M O-RING X 8M JIC 90 DEGREE	1	
9		98681001	FILTER-TANK 3 NPT OUTLET PORT	1	
10		235713001	WASHER-3/8 SAE HARD ZINC PLTD	32	
11		235726001	BOLT-3/8-16X3/4 GR8 HEX ZNCPLT	30	
12		56218001	PLUG-#8M	2	
13		96709001	HOSE INSERT-16MX1 BEAD STR.	1	
14		1580005	HOSE CLAMP - 1”	1	
15		278794001	HOSE-1X12 W/ NO ENDS 250 PSI	1	
16		278993001	HOSE - 1 X 15 16FSJIC ST/90 250PSI	1	
17		60907001	FITTING-16M JICX16M STR ADAPT	2	
18		278806001	HOSE-1X30 16FSJIC ST/90 250PSI	1	
19		7000B294	DECAL - FLUIDS	1	
20		1580013	HOSE CLAMP - 2 1/2”	2	
21		53844317	HOSE-1/2X52 8FS JIC 3000 PSI	1	
22		901678005	CLAMP-HOSE 30840-PP	2	
23		901678007	PLATE-COVER COP-3	1	
24		238210001	BOLT - 1/4-20X1 1/2 GR8 HEX ZYC	1	
25		53824001	FITTING-#8M O-RING-#8M JIC ST.	1	
26		277693001	MOUNT - HARNESS	1	
27		240310001	BOLT-3/8-16X1/2 GR8 ZINC PLTD	2	
28		2326756	DECAL-HYDRAULIC OIL	1	DOM.
28A		2326I756	DECAL-HYDRAULIC FLUID	1	INTL.
29		70000394	DECAL-VERMEER HY POWER	1	
30		96291001	PLATE-CLEANOUT PORT	3	
31		78544001	O-RING AS-378 B46	3	
33		53843679	HOSE-1/4X52 4FS JIC 2500 PSI	1	
38		53824001	FITTING-#8M O-RING-#8M JIC ST.	1	

https://truckmanualshub.com/

Hydraulic Pump Assembly (Rotation) Fig 4-13r01

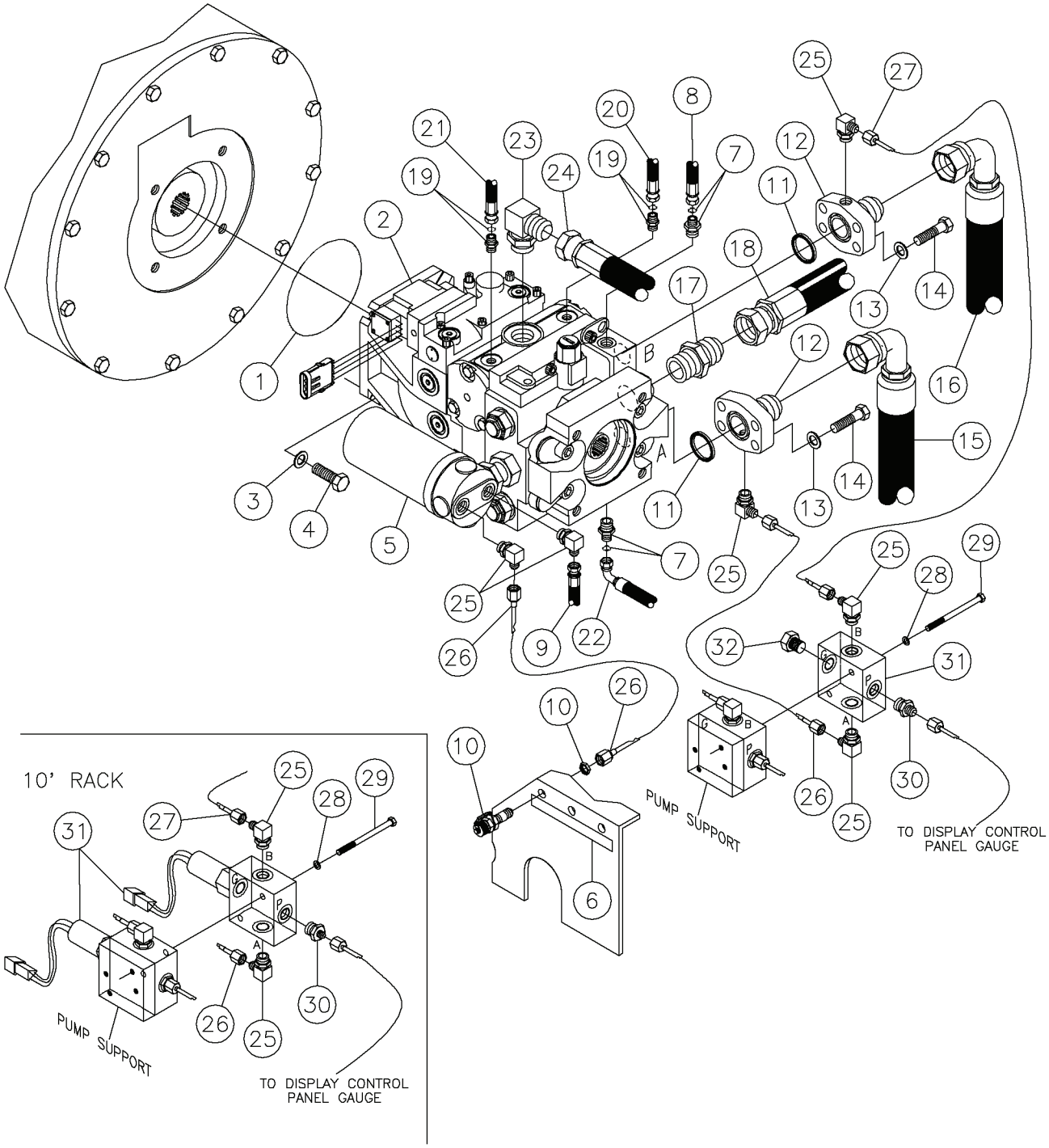

Hydraulic Pump Assembly (Rotation) Fig 4-13r01

REF. NO.	*	PART NO.	DESCRIPTION	QTY.	REMARKS
		Revision Date	June, 2004		Update In Illustration & Parts List.
1		85642163	O-RING	1	
2		278884001	PUMP - HYD 90 SERIES 55CC	1	(BREAKDOWN FIG 14-12)
3		485025	WASHER-1/2 FLAT-HARDENED-YZ	4	
4		235721001	BOLT-1/2-13X1 1/2 GR8 ZINC PLT	4	
5		81902001	FILTER-OIL	1	
6		7000B300	DECAL - TEST POINT	1	
7		278947001	FITTING-STR-4MORFF-6MORB	2	
8		278943001	HOSE - 1/4 X 13 FFOR ST/ST 6000 PSI	1	
9		53843559	HOSE-1/4X32 4FS JIC 3000 PSI	1	
10		86230001	FITTING-MALE BLKHD CPLG7/16JIC	1	
		83015001	FITTING-4F JIC DIAGNOSTIC	1	
11		72895001	O RING-SQ. #16 FLANGE	2	
12		278764001	FITTING -#16 CODE 62 FLANGE	2	
13		250515001	7/16 HARD WASHER SAE Y/ZINC	8	
14		250516001	BOLT - 12M X 35M Gr8 Y/ZINC	8	
15		291529001	HOSE - 1 X 13.5 16FS JIC ST/90 6000 PSI	1	
16		291531001	HOSE 1 X 18 16FSJIC ST/90 6000 PSI	1	
17		60907001	FITTING-16M JICX16M STR ADAPT	1	
18		278806001	HOSE-1X30 16FSJIC ST/90 250PSI	1	
19		294561001	FITTING - STR- 4MORFF - 4MORB - R.063	2	
20		278941001	HOSE - 1/4 X 11 FFOR ST/ST 6000 PSI	1	
21		278942001	HOSE - 1/4 X 11 FFOR ST/90 6000 PSI	1	
22		278944001	HOSE - 1/4 X 26 FFOR ST/90 6000 PSI	1	
23		59410001	FITTING-90-12MJ-12MORBA	1	
24		53845389	HOSE-3/4X14 12FS JIC 300 PSI	1	
25		57950001	FITTING-90-4MJ-6MORBA	6	
26		285556001	HOSE - .078 X 18 4 FS JIC ST/ST 6900 PSI	1	
27		285557001	HOSE - .078 X 12 4 FS JIC ST/ST 6900 PSI	1	
28		510337603	WASHER-FLATSTD-.25-.31X.75-.07-YZ	2	
29		244204001	BOLT-1/4-20X3 1/2 GR8 ZNC PLTD	2	
30		57968001	FITTING-STR-4MJ-6MORB	1	
31		296260319	VALVE - SHUTTLE W/PRESSURE SWITCH	1	
		296260320	SWITCH - 500 PSI PRESSURE	1	
		296267116	SHUTTLE VALVE	1	
		260040007	SEAL KIT	1	
32		5553001	FITTING - PLUG - 6MORB - HEX	1	15’ RACK ONLY

https://truckmanualshub.com/

Hydraulic Pump Assembly (Rotation) Fig 4-13

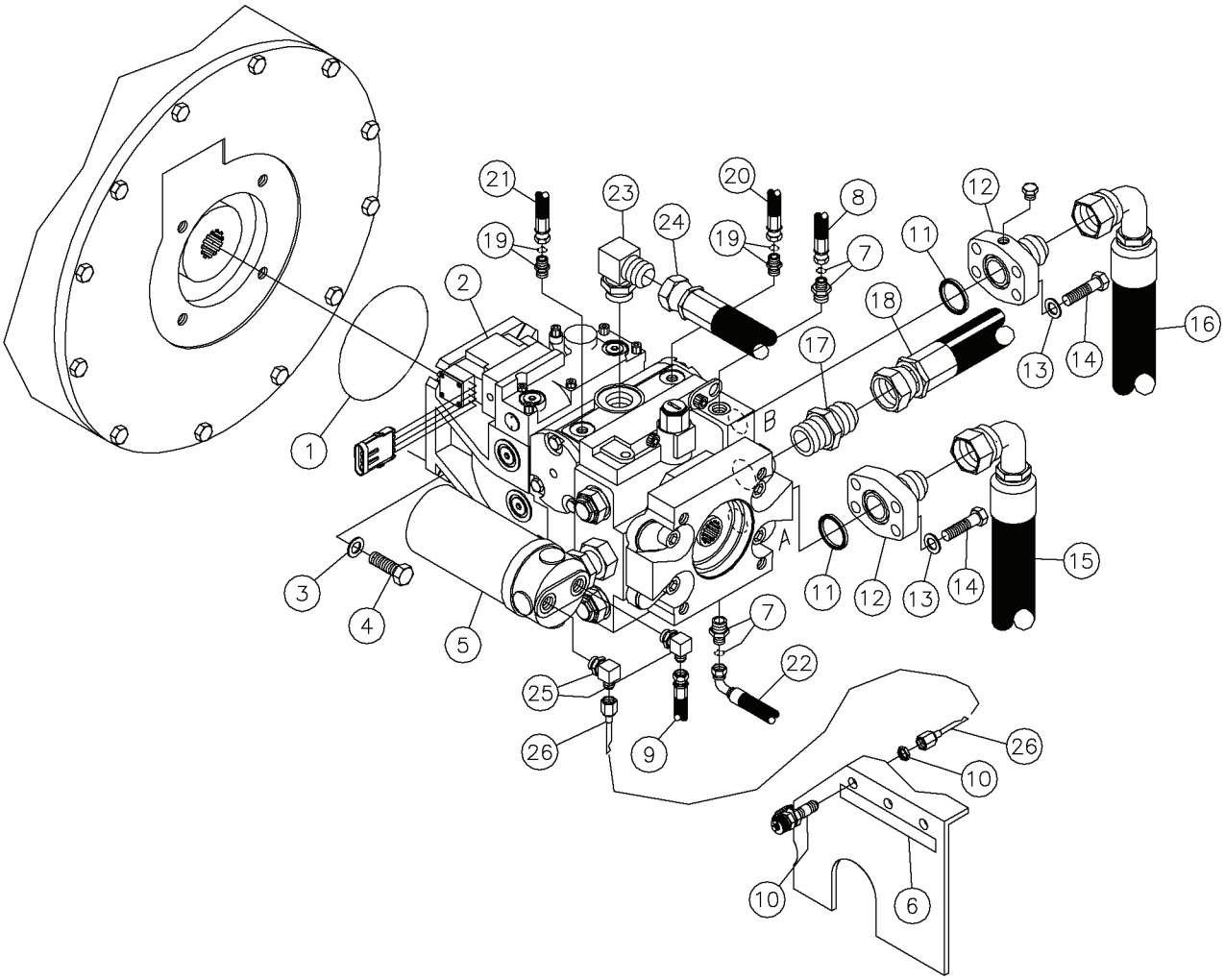

Hydraulic Pump Assembly (Rotation) Fig 4-13

REF. NO.	*	PART NO.	DESCRIPTION	QTY.	REMARKS
1		85642163	O-RING	1	
2		278884001	PUMP - HYD 90 SERIES 55CC	1	(BREAKDOWN FIG 14-12)
3		485025	WASHER-1/2 FLAT-HARDENED-ZINC	4	
4		235721001	BOLT-1/2-13X1 1/2 GR8 ZINC PLT	4	
5		81902001	FILTER-OIL	1	
6		7000B300	DECAL - TEST POINT	1	
7		278947001	FITTING-STR-4MORFF-6MORB	2	
8		278943001	HOSE - 1/4 X 13 FFOR ST/ST 6000 PSI	1	
9		53843559	HOSE-1/4X32 4FS JIC 3000 PSI	1	
10		83015001	FITTING-4F JIC DIAGNOSTIC	1	
10		86230001	FITTING-MALE BLKHD CPLG7/16JIC	1	
11		72895001	O RING-SQ. #16 FLANGE	2	
12		278764001	FITTING -#16 CODE 62 FLANGE	2	
13		250515001	WASHER - 7/16 HARD SAE Y/ZINC	8	
14		250506001	BOLT 7/16-14 X 1 1/2” GR8 HEX	8	
15		291529001	HOSE - 1 X 13.5 16FS JIC ST/90 6000 PSI	1	
16		291531001	HOSE 1 X 18 16FSJIC ST/90 6000 PSI	1	
17		60907001	FITTING-16M JICX16M STR ADAPT	1	
18		278806001	HOSE-1X30 16FSJIC ST/90 250PSI	1	
19		294561001	FITTING - STR- 4MORFF - 4MORB - R.063	2	
20		278941001	HOSE - 1/4 X 11 FFOR ST/ST 6000 PSI	1	
21		278942001	HOSE - 1/4 X 11 FFOR ST/90 6000 PSI	1	
22		278944001	HOSE - 1/4 X 26 FFOR ST/90 6000 PSI	1	
23		59410001	ELBOW - 12M JICX12M ADJ. 90 DEG.	1	
24		53845389	HOSE-3/4X14 12FS JIC 300 PSI	1	
25		57950001	FITTING-90-4MJ-6MORBA	2	
26		285556001	HOSE - .078 X 18 4 FS JIC ST/ST 6900 PSI	1	

https://truckmanualshub.com/

Hydraulic Pump Assembly (Thrust/Pullback) Fig 4-14r01

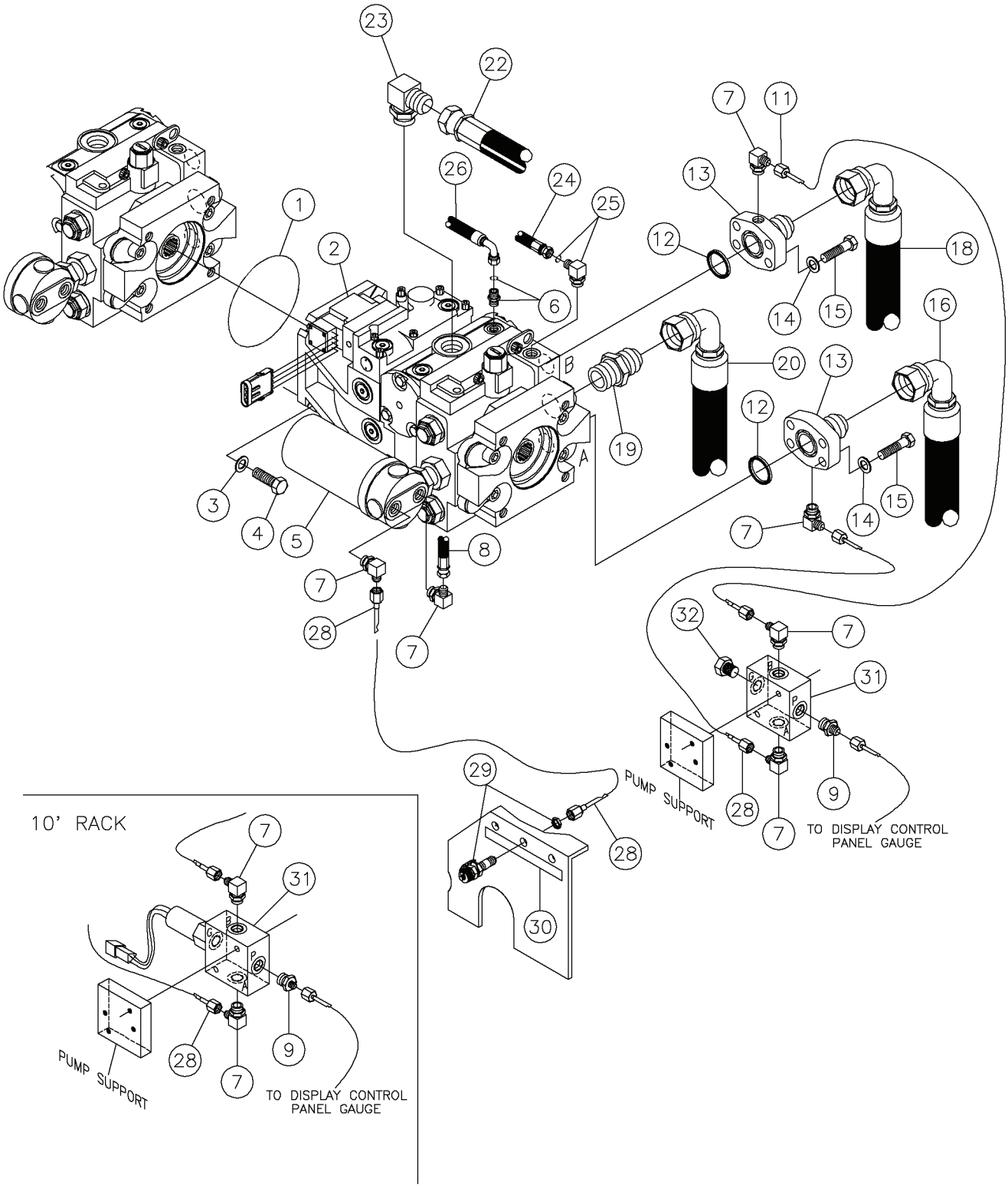

https://truckmanualshub.com/

Hydraulic Pump Assembly (Thrust/Pullback) Fig 4-14r01

REF. NO.	*	PART NO.	DESCRIPTION	QTY.	REMARKS
		Revision Date	June, 2004		Update In Illustration & Parts List.
1		85642163	O-RING	1	
2		278884001	PUMP - HYD 90 SERIES 55CC	1	(BREAKDOWN FIG 14-12)
3		485025	WASHER-1/2 FLAT-HARDENED-YZ	4	
4		235721001	BOLT-1/2-13X1 1/2 GR8 ZINC PLT	4	
5		81902001	FILTER-OIL	1	
6		294561001	FITTING - STR- 4MORFF - 4MORB - R.063	1	
7		57950001	FITTING-90-4MJ-6MORBA	6	
8		279090001	HOSE - 1/4X10 JIC ST/90 3000 PSI	1	
9		57968001	FITTING-STR-4MJ-6MORB	1	
10		296256080	VALVE - GAUGE SHUTTLE	1	
11		285556001	HOSE - .078 X 18 4 FS JIC ST/ST 6900 PSI	1	
12		72895001	O RING-SQ. #16 FLANGE	2	
13		278764001	FITTING -#16 CODE 62 FLANGE	2	
14		250515001	7/16 HARD WASHER SAE Y/ZINC	8	
15		250506001	BOLT 7/16-14 X 1 1/2” GR8 HEX	8	
16		291532001	HOSE - 1X 21 16FSJIC ST/90 6000 PSI	4	
17		5553001	FITTING - PLUG - 6MORB - HEX	1	
18		278789001	HOSE-1X25 16 FSJIC ST/90 G6K	1	
19		60907001	FITTING-16M JICX16M STR ADAPT	1	
20		278993001	HOSE - 1 X 15 16FSJIC ST/90 250PSI	1	
21		57968001	FITTING-STR-4MJ-6MORB	1	
22		53845151	HOSE-3/4X12 12FS JIC (100R1)	1	
23		59410001	FITTING-90-12MJ-12MORBA	1	
24		278949001	HOSE - 1/4 X 24 FFOR ST/90 6000 PSI	1	
25		278948001	FITTING - 90 - 4MORFF - 6MORBA	1	
26		278945001	HOSE - 1/4 X 20 FFOR ST/90 6000 PSI	1	
27		278923001	HOSE - .078X168 4FSJIC ST/ST MICRO 6900 PSI	1	
28		285557001	HOSE - .078 X 12 4 FS JIC ST/ST 6900 PSI	2	
29		86230001	FITTING-MALE BLKHD CPLG7/16JIC	1	
30		7000B300	DECAL - TEST POINT	1	
31		296260319	VALVE - SHUTTLE W/PRESSURE SWITCH	1	
		296260320	SWITCH - 500 PSI PRESSURE	1	
		296267116	SHUTTLE VALVE	1	
		260040007	SEAL KIT	1	
32		5553001	FITTING - PLUG - 6MORB - HEX	1	15’ RACK ONLY

https://truckmanualshub.com/

Hydraulic Pump Assembly (Thrust/Pullback) Fig 4-14

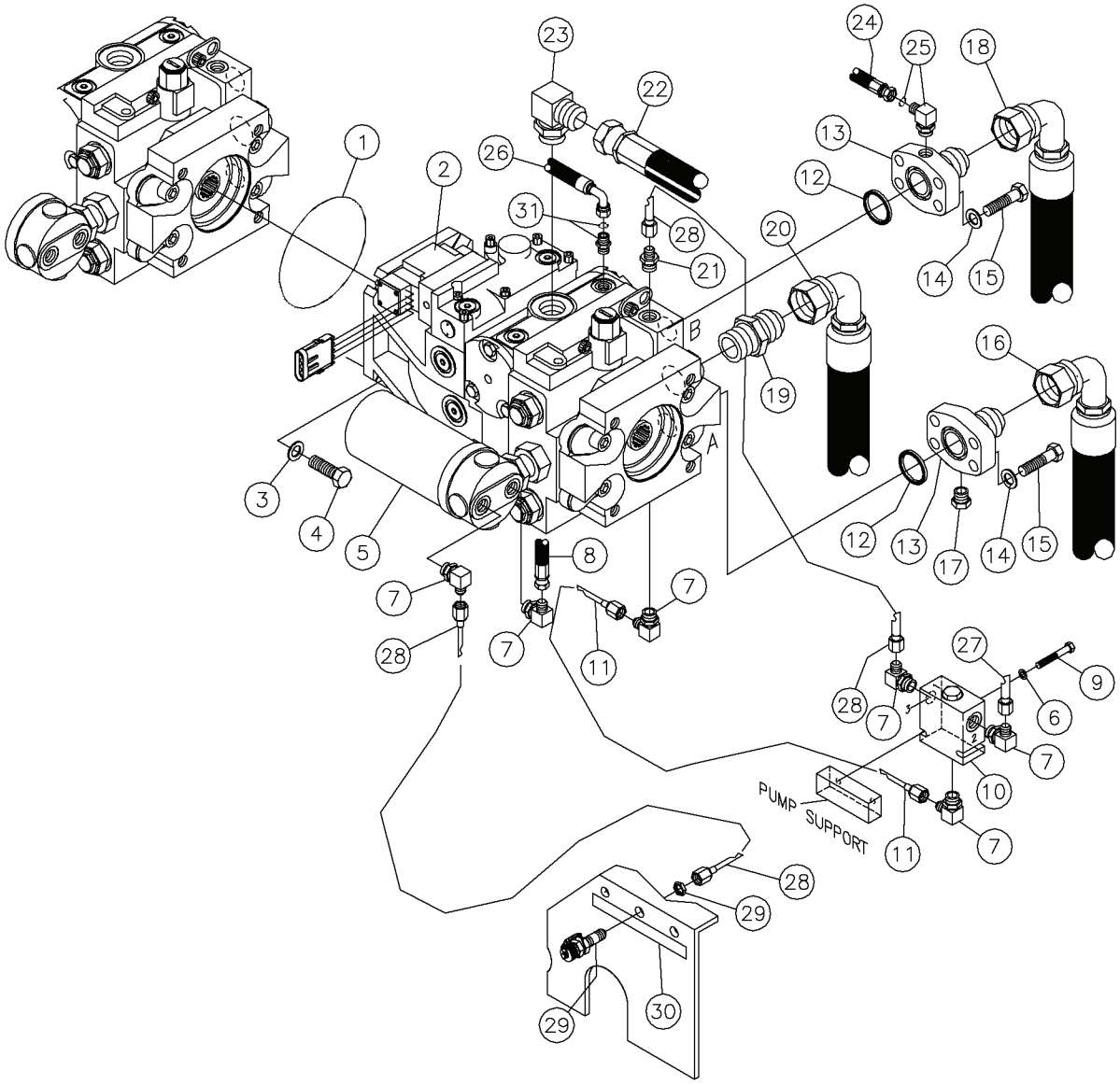

https://truckmanualshub.com/

Hydraulic Pump Assembly (Thrust/Pullback) Fig 4-14

REF. NO.	*	PART NO.	DESCRIPTION	QTY.	REMARKS
1		85642163	O-RING	1	
2		278884001	PUMP - HYD 90 SERIES 55CC	1	(BREAKDOWN FIG 14-12)
3		485025	WASHER-1/2 FLAT-HARDENED-ZINC	4	
4		235721001	BOLT-1/2-13X1 1/2 GR8 ZINC PLT	4	
5		81902001	FILTER-OIL	1	
6		510337603	WASHER-FLATSTD-.25-.31X.75-.07-YZ	2	
7		57950001	FITTING-90-4MJ-6MORBA	6	
8		279090001	HOSE - 1/4X10 JIC ST/90 3000 PSI	1	
9		248107001	BOLT-1/4-20X1 3/4 GR 8 ZINC PL	2	
10		296256080	VALVE - GAUGE SHUTTLE	1	
11		285556001	HOSE - .078 X 18 4 FS JIC ST/ST 6900 PSI	1	
12		72895001	O RING-SQ. #16 FLANGE	2	
13		278764001	FITTING -#16 CODE 62 FLANGE	2	
14		250515001	7/16 HARD WASHER SAE Y/ZINC	8	
15		250506001	BOLT 7/16-14 X 1 1/2” GR8 HEX	8	
16		291532001	HOSE - 1X 21 16FSJIC ST/90 6000 PSI	1	
17		5553001	PLUG-#6M	1	
18		278789001	HOSE-1X25 16 FSJIC ST/90 G6K	1	
19		60907001	FITTING-16M JICX16M STR ADAPT	1	
20		278993001	HOSE - 1 X 15 16FSJIC ST/90 250PSI	1	
21		57968001	FITTING-STR-4MJ-6MORB	1	
22		53845151	HOSE-3/4X12 12FS JIC (100R1)	1	
23		59410001	12M JICX12M ADJ. 90 DEG.ELBOW	1	
24		278949001	HOSE - 1/4 X 24 FFOR ST/90 6000 PSI	1	
25		278948001	FITTING - 6 MOR X 4 FFOR 90 DEG	1	
26		278945001	HOSE - 1/4 X 20 FFOR ST/90 6000 PSI	1	
27		278923001	HOSE - .078X168 4FSJIC ST/ST MICRO 6900 PSI	1	
28		285557001	HOSE - .078 X 12 4 FS JIC ST/ST 6900 PSI	2	
29		86230001	FITTING-MALE BLKHD CPLG7/16JIC	1	
30		7000B300	DECAL - TEST POINT	1	
31		294561001	FITTING - STR- 4MORFF - 4MORB - R.063	1	

https://truckmanualshub.com/

Hydraulic Pump Assembly (PFC/Implement) Fig 4-15

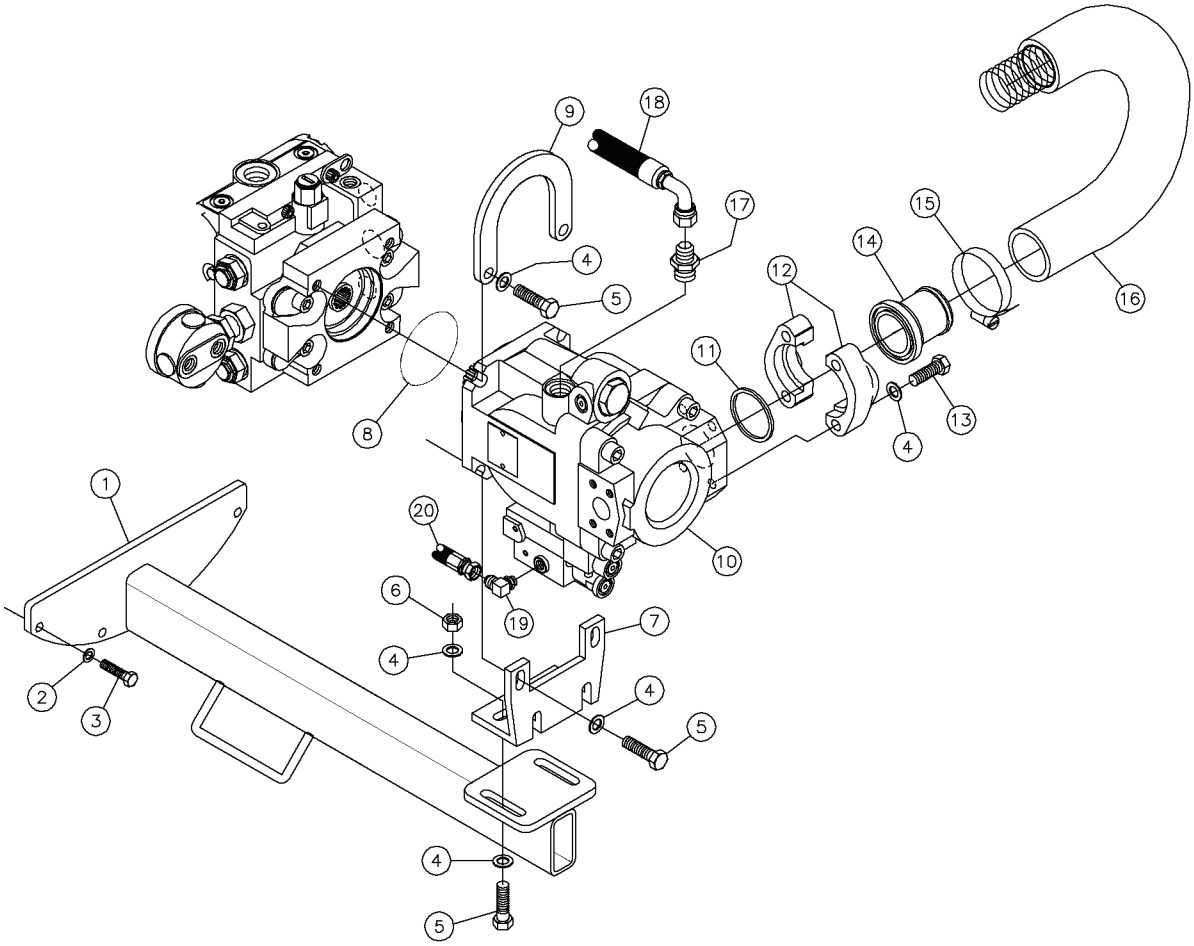

https://truckmanualshub.com/

Hydraulic Pump Assembly (PFC/Implement) Fig 4-15

REF. NO.	*	PART NO.	DESCRIPTION	QTY.	REMARKS
1		251190001	SUPPORT-PUMP	1	
2		141350001	WASHER-M10 HARDEN PLATED FLAT	4	
3		250574001	BOLT-10M X 50M 10.9 HEX Y/ZINC	4	
4		485025	WASHER-1/2 FLAT-HARDENED-ZINC	12	
5		240334001	BOLT-1/2-13X1 3/4 GR8 ZINC PLT	8	
6		235731001	NUT-1/2-13 GR8 ZINC PLTD	2	
7		278842001	PLATE - PUMP SUPPORT	1	
8		85642163	O-RING	1	
9		251238001	PLATE - LIFT POINT	1	
10		278885001	PUMP - HYDRAULIC 45 SERIES 74CC	1	(BREAKDOWN FIG 14-13)
11		72898001	O RING-SQ. #32 FLANGE	1	
12		73114001	FITTING-CODE 61 #32 FLANGE	2	
13		235721001	BOLT-1/2-13X1 1/2 GR8 ZINC PLT	4	
14		278765001	FITTING-#32 FLANGE X 2” HB ST.	1	
15		1580013	HOSE CLAMP - 2 1/2”	1	
16		251243001	HOSE - PUMP SUCTION	1	
17		53826001	#10M O-RING-#8M JIC ST.	1	
18		53844403	HOSE-1/2X30 8FS JIC/8FS JIC 90	1	
19		278934001	FILTER - 4 MOR X 6 MJIC 90 DEG 100 MICRON	1	
20		57940445	HOSE-3/8X20 6FS JIC 3000 PSI	1	

https://truckmanualshub.com/

Rotation Drive Motor Hydraulic Assembly Fig 4-16

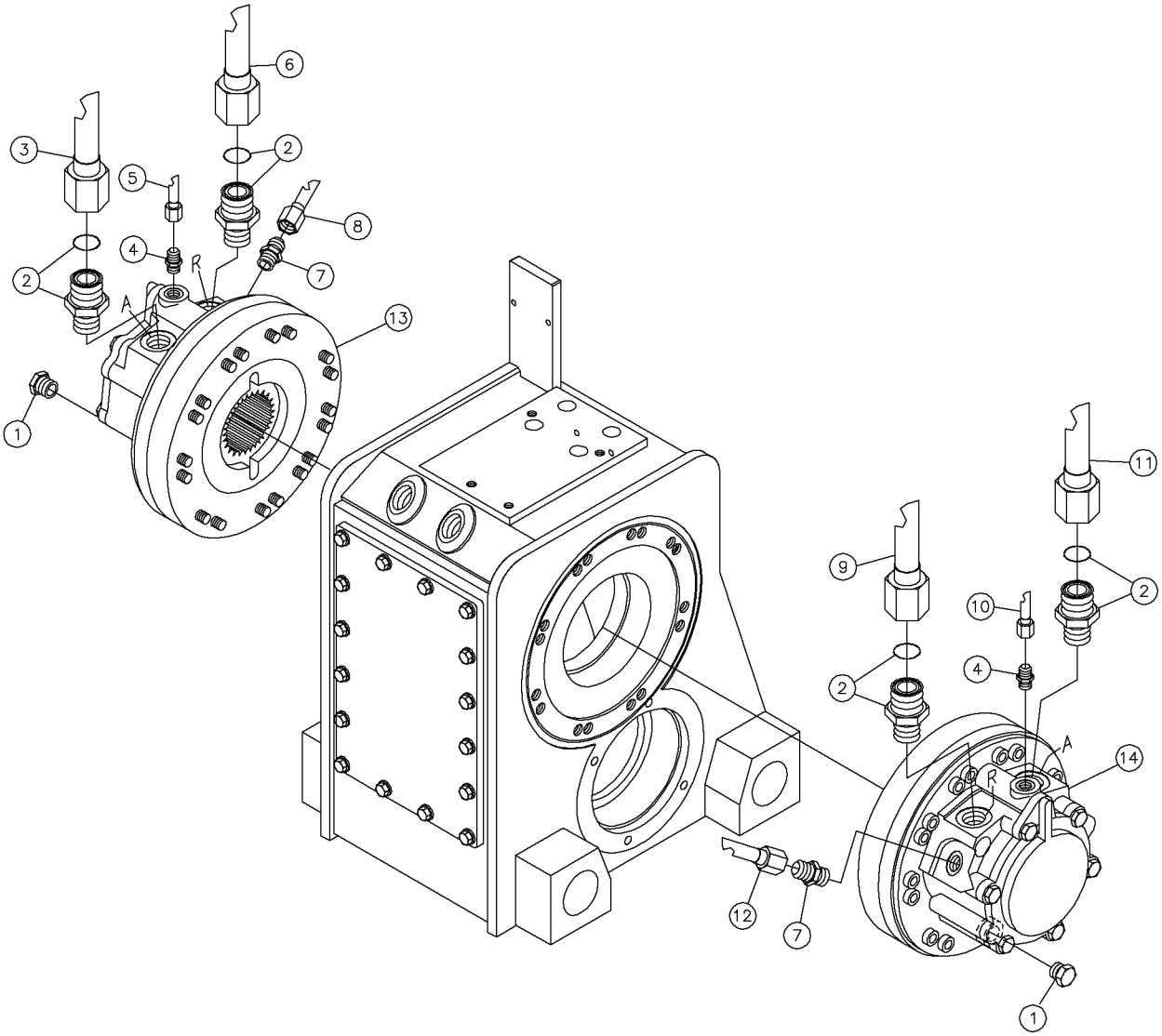

https://truckmanualshub.com/

Rotation Drive Motor Hydraulic Assembly Fig 4-16

REF. NO.	*	PART NO.	DESCRIPTION	QTY.	REMARKS
1		56218001	PLUG-#8M	2	
2		278957001	FITTING - 12 MOR X 16 MFFOR	4	
3		278964001	TUBE - GEARBOX VALVE B1	1	
4		65565001	FITTING - 6M O-RING X 6M JIC ST.	2	
5		278970001	TUBE - GEARBOX VALVE D2	1	
6		278965001	TUBE - GEARBOX VALVE A1	1	
7		53824001	FITTING-#8M O-RING-#8M JIC ST.	2	
8		278967001	TUBE - GEARBOX VALVE C2	1	
9		278963001	TUBE - GEAR BOX VALVE A2	1	
10		278968001	TUBE - GEARBOX VALVE D1	1	
11		278962001	TUBE - GEARBOX VALVE B2	1	
12		278966001	TUBE - GEARBOX VALVE C1	1	
13		235791001	MOTOR-38.2CID W/O BRAKE G PREF	1	(BREAKDOWN FIG 14-3)
14		235790001	MOTOR-38.2CID W/O BRAKE D PREF	1	(BREAKDOWN FIG 14-2)

https://truckmanualshub.com/

Track Drive Motor Assembly Fig 4-17

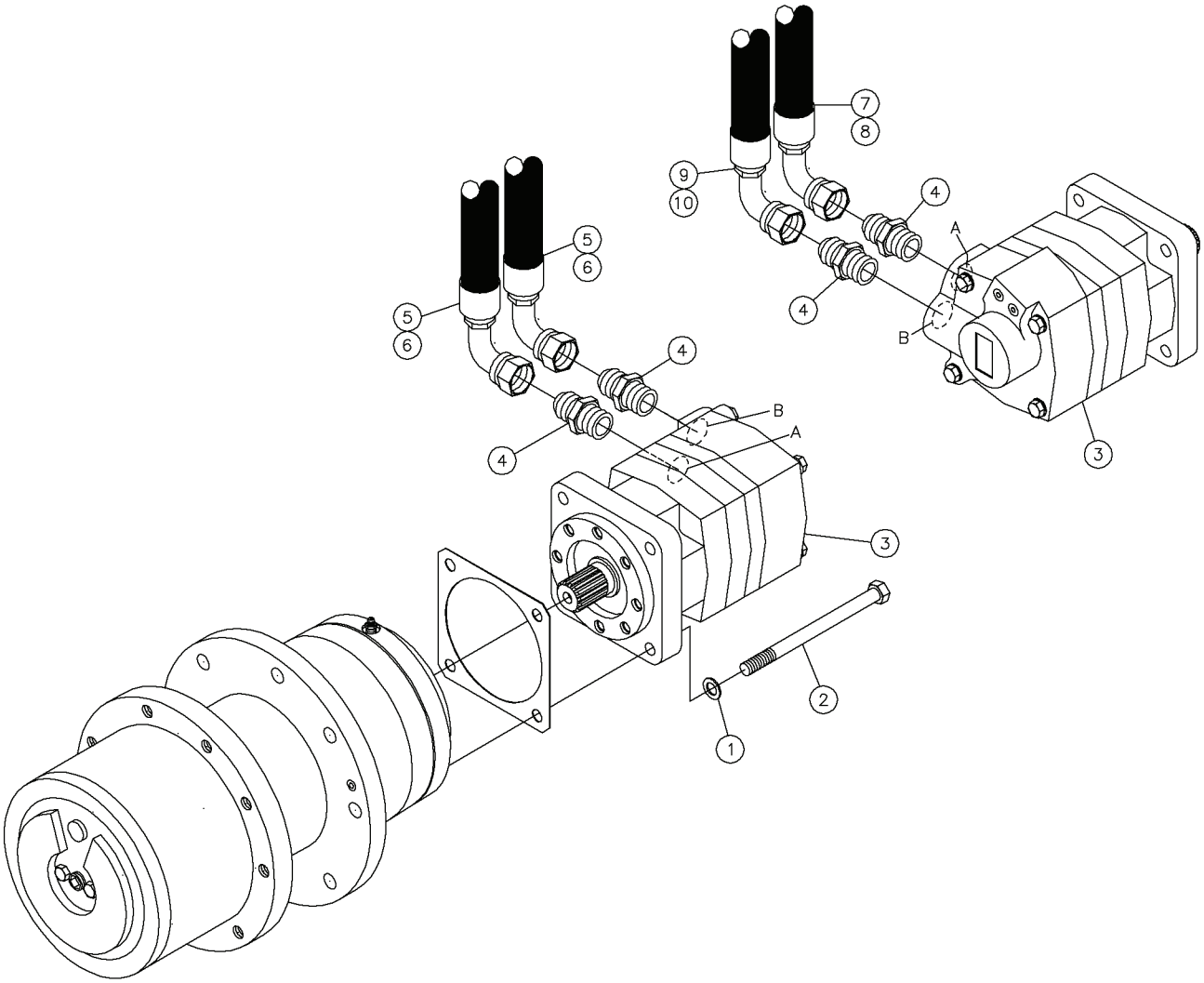

https://truckmanualshub.com/

Track Drive Motor Assembly Fig 4-17

REF. NO.	*	PART NO.	DESCRIPTION	QTY.	REMARKS
1		485025	WASHER-1/2 FLAT-HARDENED-ZINC	8	
2		251046001	BOLT-1/2-13X6 3/4 GR8 HEX ZINC	8	
3		251105001	MOTOR-7.9 CID 4000 SERIES HYD.	2	(BREAKDOWN FIG 14-7)
4		53828001	#12M O-RING-#12M JIC ST.	4	
5		53845457	HOSE-3/4X28 12FS JIC 3000 PSI	2	15’ RACK
6		294588001	HOSE - HYD - .75 X 47 - 12FSJ - ST/45 - 3000PSI	2	10’ RACK
7		53845535	HOSE-3/4X38 12FS JIC 3000 PSI	1	15’ RACK
8		294589001	HOSE - HYD- .75 X 58 -12FSJ - ST/90 - 3000PSI	1	10’ RACK
9		278803001	HOSE-3/4X40 12FSJIC ST/90 M3K	1	15’ RACK
10		294590001	HOSE - HYD -.75 X 60 - 12FSJ - ST/90 - 3000PSI	1	10’ RACK

https://truckmanualshub.com/

Thrust/Pullback Drive Motor Assembly Fig 4-18

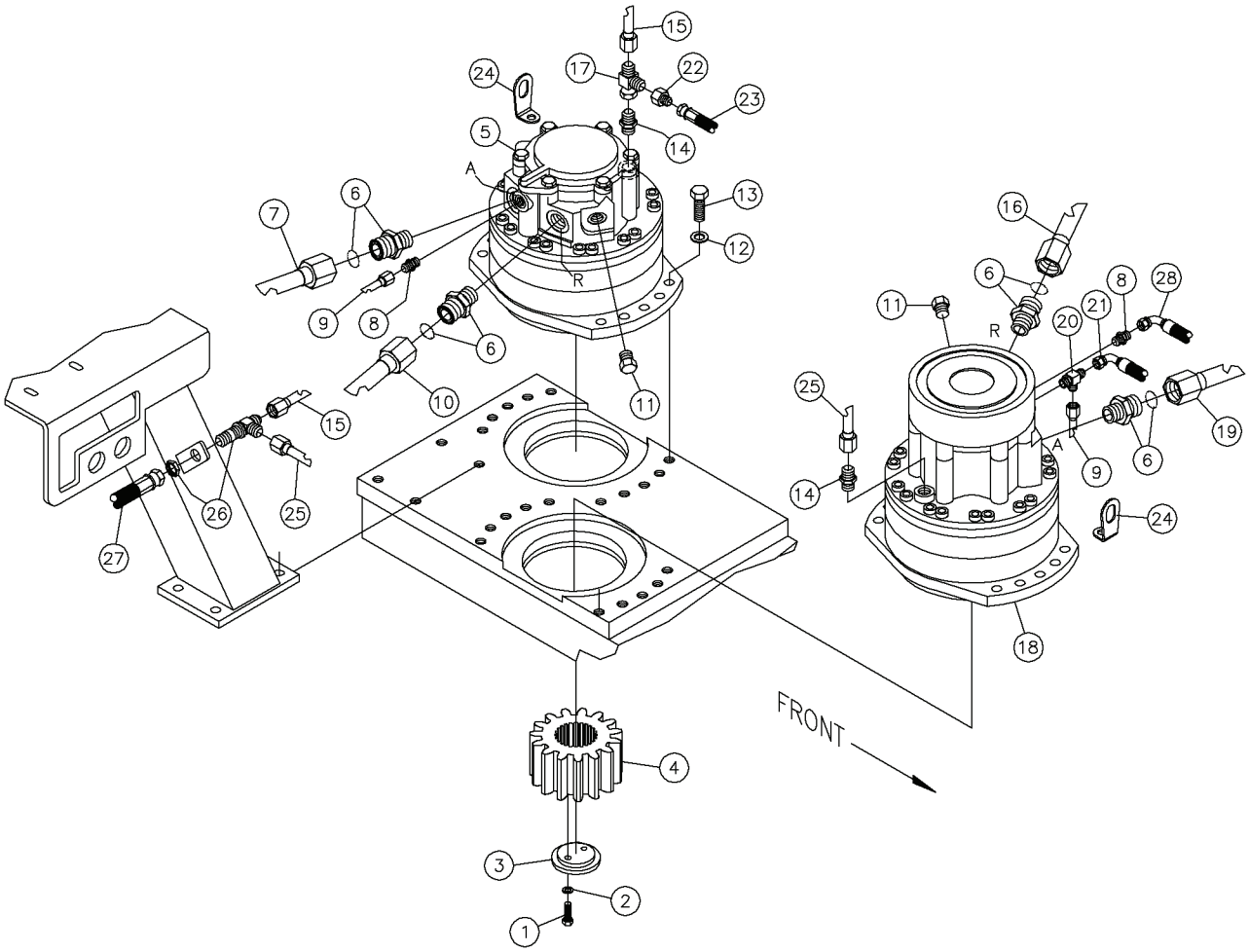

Thrust/Pullback Drive Motor Assembly Fig 4-18

REF. NO.	*	PART NO.	DESCRIPTION	QTY.	REMARKS
1		281779001	BOLT -M10X16MM SOC HD CAP SCREW	4	
2		250519001	WASHER - 10MM HARD Y /ZINC	4	
3		276320001	PLATE - PINION CAP	2	
4		276263001	GEAR - PINION THRUST PULLBACK	2	
5		276258001	MOTOR-57.5 CI/REV MS08 D PREF	1	(BREAKDOWN FIG 14-4)
6		278957001	FITTING - 12 MOR X 16 MFFOR	4	
7		278928001	TUBE - REAR THRUST MOTOR A	1	
8		65565001	FITTING - 6M O-RING X 6M JIC ST.	2	
9		278971001	TUBE - THRUST MOTOR Y	1	
10		278930001	TUBE - REAR THRUST MOTOR R	1	
11		56218001	PLUG-#8M	2	
12		235715001	WASHER-5/8 SAE HARD ZINC PLTD	20	
13		238220001	BOLT-5/8-11X1 3/4 GR 8 HEX YZC - 230728001 REPLACE	20	
14		53824001	FITTING-#8M O-RING-#8M JIC ST.	2	
15		278972001	TUBE - REAR THRUST MOTOR CD	1	
16		278931001	TUBE - FRONT THRUST MOTOR R	1	
17		59461001	FITTING - 8 JIC SW RUN TEE	1	
18		278973001	MOTOR - 57.5 CID MSO8 G W/ BRAKE	1	(BREAKDOWN FIG 14-5)
19		278929001	TUBE - FRONT THRUST MOTOR A	1	
20		68774001	FITTING-6MX6M JIC (RUN)X6M JIC	1	
21		278960001	HOSE - 3/8 X 23 6FSJIC ST/90 3000PSI	1	
22		61500001	FITTING - 8 JIC F X 6 JIC M STR.	1	
23		57940739	HOSE-3/8X27 6FS JIC 3000 PSI	1	
24		278926001	PLATE - LIFT POINT	4	
25		278940001	TUBE - FRONT THRUST MOTOR CD	1	
26		278866001	FITTING -8 MJIC BULKHEAD RUN TEE	1	
27		278959001	HOSE - 1/2 X 218 8FSJIC ST/ST M3K	1	
28		278961001	HOSE - 3/8 X 21 6FSJIC ST/90 3000PSI	1	

https://truckmanualshub.com/

Water Pump Drive Motor Assembly Fig 4-19

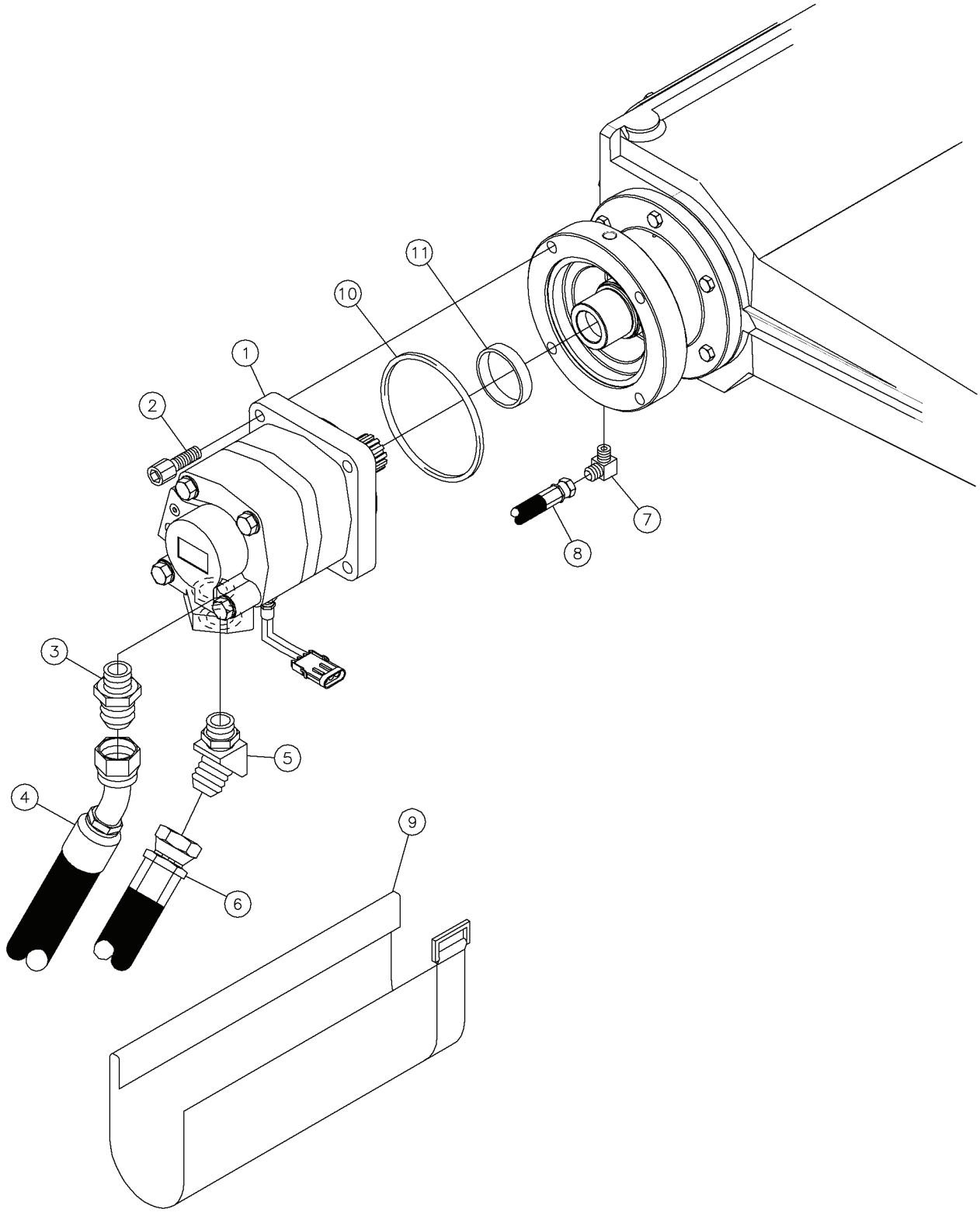

https://truckmanualshub.com/

Water Pump Drive Motor Assembly Fig 4-19

REF. NO.	*	PART NO.	DESCRIPTION	QTY.	REMARKS
1		251106001	MOTOR -12.5 CID 4000 SERIES HY	1	(BREAKDOWN FIG 14-6)
2		276402001	SCREW-1/2-13X1 1/2 SHC Y ZINC	4	
3		70009001	FITTING-12M X 16M JIC STR.	1	
4		279040001	HOSE-1X77 16FSJIC ST/45 M3K	1	
5		65568001	FITTING - 12M X 16M JIC 45 DEGREE	1	
6		279039001	HOSE-1X74 16FSJIC ST/ST M3K	1	
7		68707001	FITTING-1/4MX6M JIC 90 DEG.	1	
8		279053001	HOSE - 3/8 X 78 6FS JIC-6FS 90DEG	1	
9		278898001	SLEEVE - HYD HOSE	1	
10		278882025	O-RING	1	
11		278882026	BEARING SLEEVE	1	

https://truckmanualshub.com/

Proportional /Dump Valve Assembly Fig 4-20

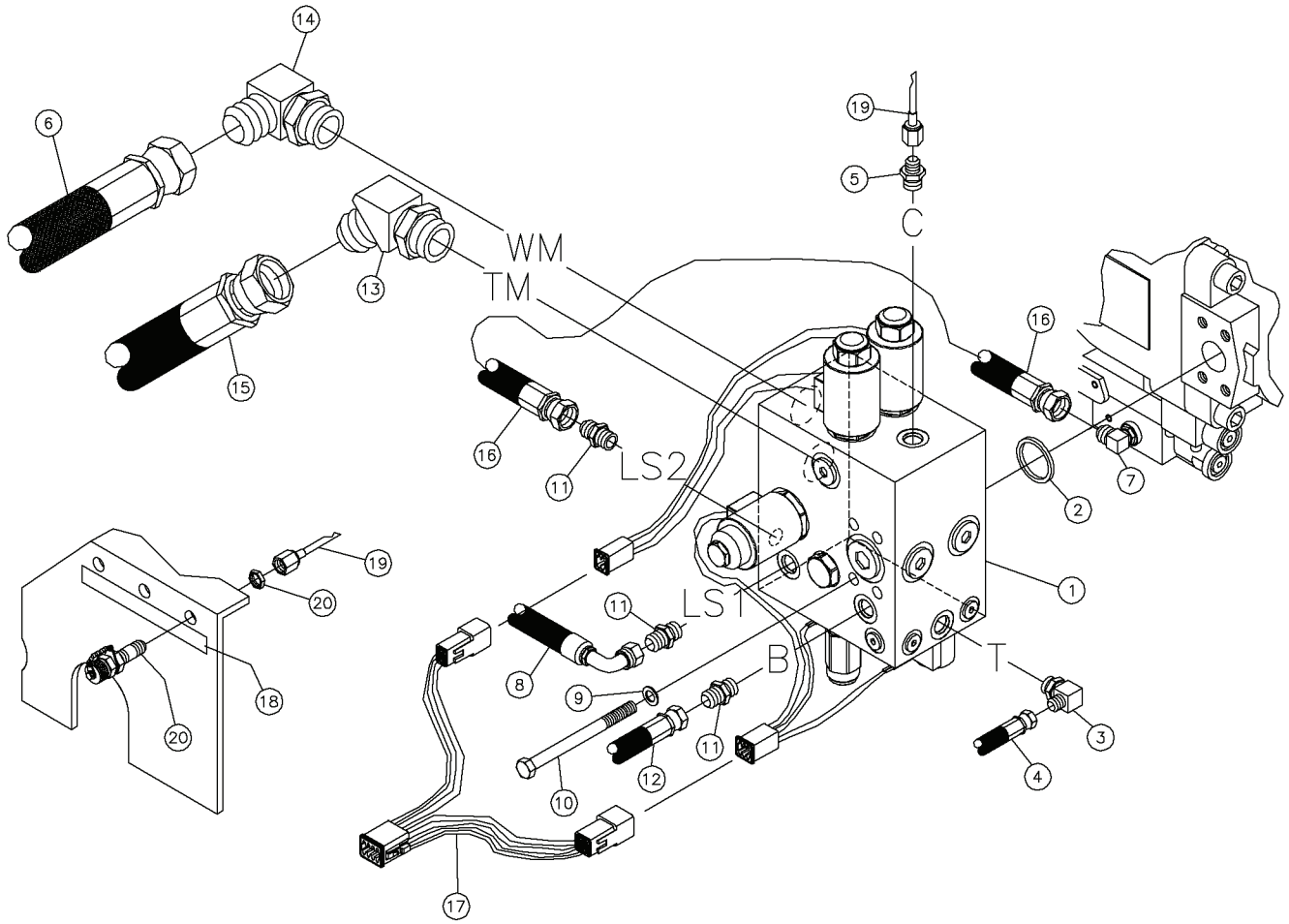

Proportional /Dump Valve Assembly Fig 4-20

REF. NO.	*	PART NO.	DESCRIPTION	QTY.	REMARKS
1		294546001	VALVE-PROPORTIONAL/DUMP	1	BREAKDOWN FIG. (14-25)
2		72895001	O RING-SQ. #16 FLANGE	1	
3		57950001	FITTING-90-4MJ-6MORBA	2	
4		53843679	HOSE-1/4X52 4FS JIC 2500 PSI	1	
5		57968001	FITTING-STR-4MJ-6MORB	1	
6		294554001	HOSE - HYD - 1 - 49 - 16FSJ - ST/45 - 3000PSI	1	
7		60906001	FITTING - 4MX6M JIC 90 DEG ELBOW	1	
8		242729001	HOSE-3/8X45 6FSJIC X6FSJIC 90	1	
9		235713001	WASHER-3/8 SAE HARD ZINC PLTD	4	
10		238246001	BOLT 3/8”-16 X 4 1/2” GR8 HEX	4	
11		65565001	FITTING - 6M O-RING X 6M JIC ST.	1	
12		57940721	HOSE-3/8X63 6FSJICST 3000 PSI	1	
13		53835001	#16M O-RING-#16M JIC 45 DEG.	1	
14		59426001	FITTING - 6M JIC X 6M O-RING ADJ 90 ELBOW	1	
15		278797001	HOSE-1X38 16FSJIC ST/90 M3K	1	
16		57940445	HOSE-3/8X20 6FS JIC 3000 PSI	1	
17		294555001	HARNESS-PROP/DUMP VALVE	1	
18		7000B300	DECAL - TEST POINT	1	
19		285556001	HOSE - .078 X 18 4 FS JIC ST/ST 6900 PSI	1	
20		86230001	FITTING-MALE BLKHD CPLG7/16JIC	1	

https://truckmanualshub.com/

Torque Limiter/Thrust Limiter Valve Assembly Fig 4-21

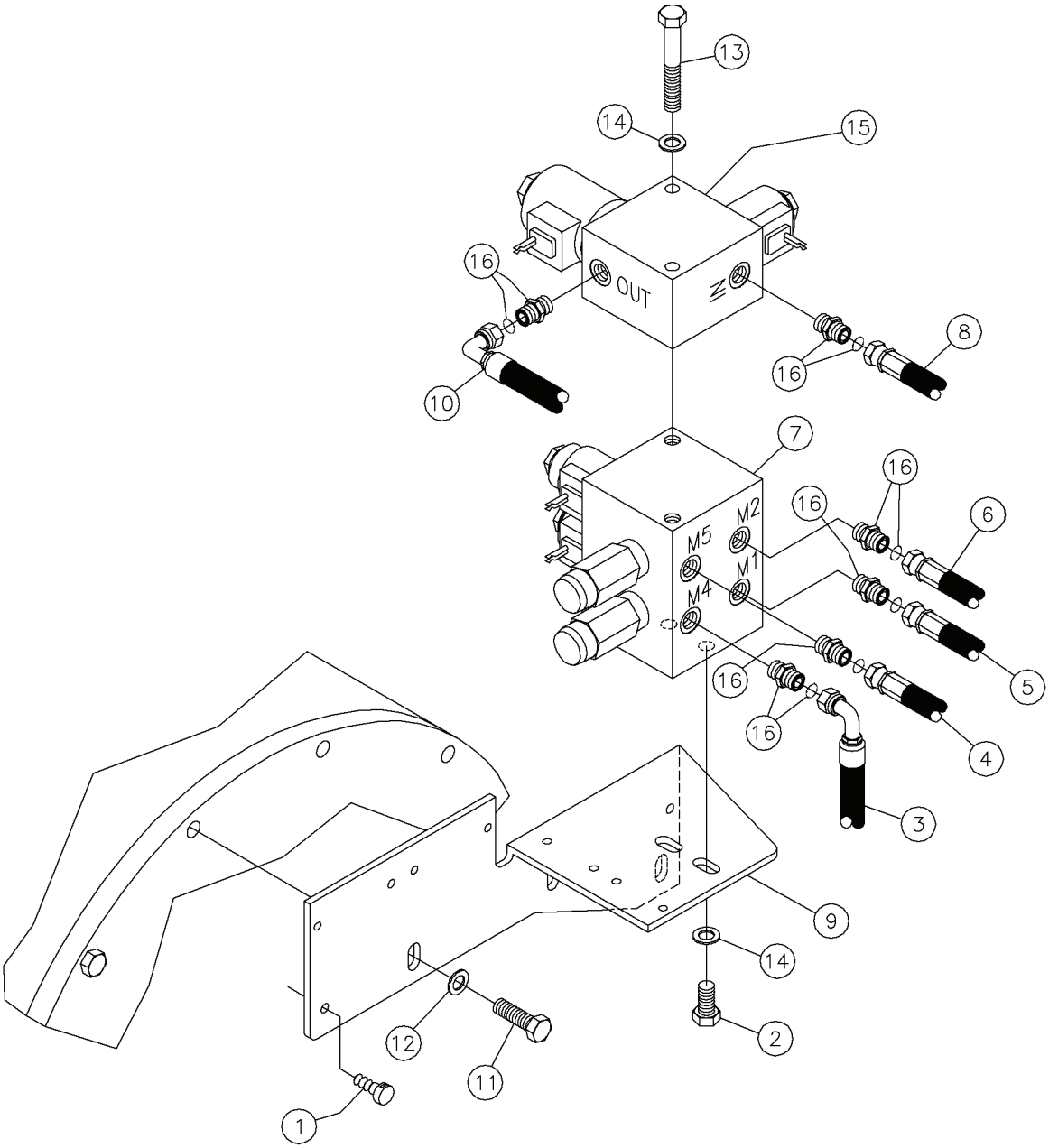

Torque Limiter/Thrust Limiter Valve Assembly Fig 4-21

REF. NO.	*	PART NO.	DESCRIPTION	QTY.	REMARKS
1		278953001	ANCHOR - CABLE TIE	2	
2		235726001	BOLT-3/8-16X3/4 GR8 HEX ZNCPLT	2	
3		278942001	HOSE - 1/4 X 11 FFOR ST/90 6000 PSI	1	
4		278941001	HOSE - 1/4 X 11 FFOR ST/ST 6000 PSI	1	
5		278944001	HOSE - 1/4 X 26 FFOR ST/90 6000 PSI	1	
6		278943001	HOSE - 1/4 X 13 FFOR ST/ST 6000 PSI	1	
7		278917001	VALVE - TORQUE LIMITER	1	(BREAKDOWN FIG 14-22)
8		278945001	HOSE - 1/4 X 20 FFOR ST/90 6000 PSI	1	
9		278935001	PLATE-TOURQUE LIMITER MOUNT	1	
10		278949001	HOSE - 1/4 X 24 FFOR ST/90 6000 PSI	1	
11		249891001	BOLT-M10X35 10.9 HHCS D933 ZNC	3	
12		141350001	WASHER-M10 HARDEN PLATED FLAT	3	
13		250259001	BAR-INDICATOR	2	
14		235713001	WASHER-3/8 SAE HARD ZINC PLTD	4	
15		278950001	VALVE - THRUST LIMITER	1	(BREAKDOWN FIG 14-15)
16		278946001	FITTING - 4 MOR X 4FFOR ST	6	

https://truckmanualshub.com/

Three Speed/Loop Flush Valve Assembly Fig 4-22

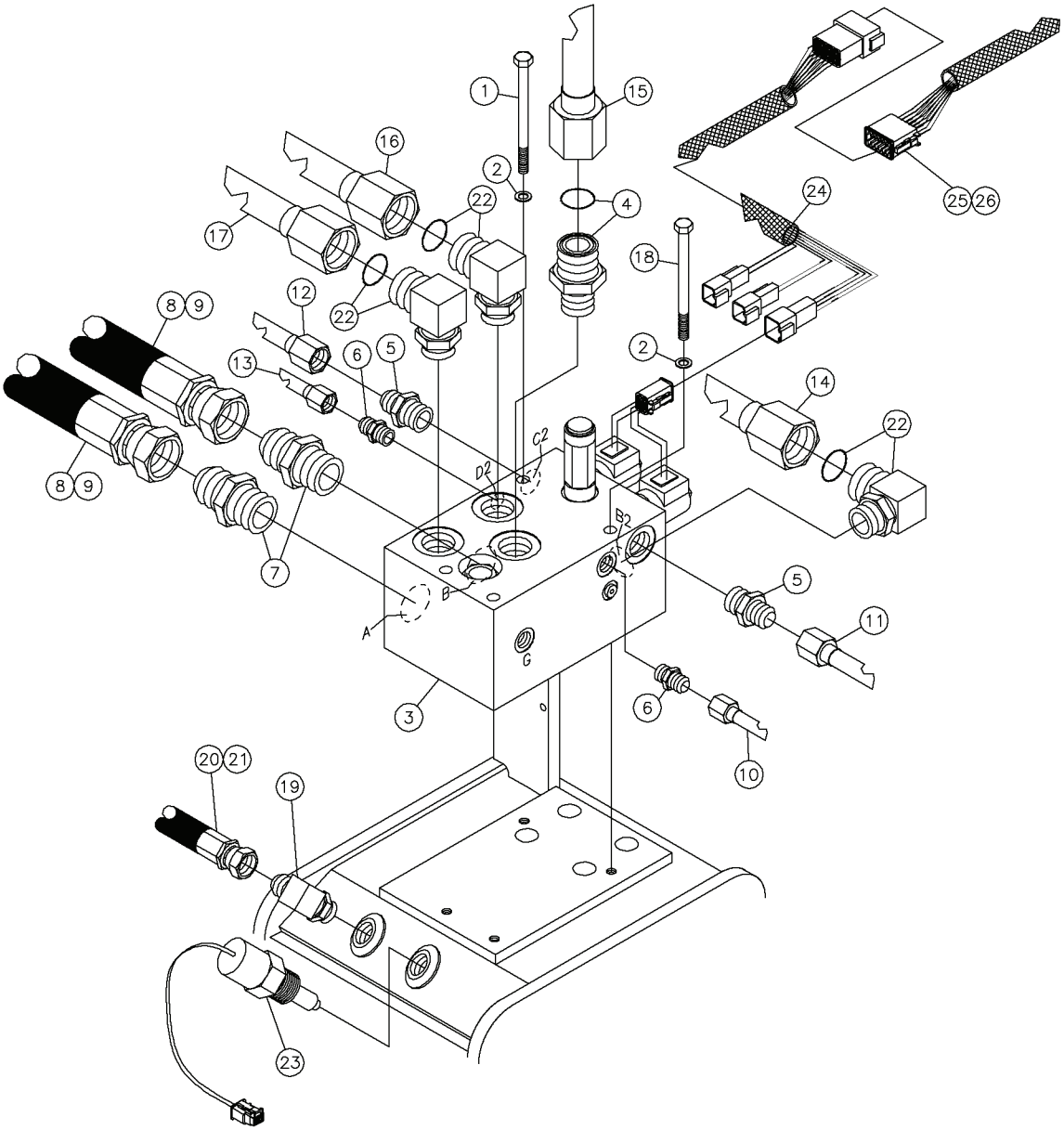

https://truckmanualshub.com/

Three Speed/Loop Flush Valve Assembly Fig 4-22

REF. NO.	*	PART NO.	DESCRIPTION	QTY.	REMARKS
1		278958001	BOLT - 5/16-18 X 4-1/4 GR8 HCS YZ	2	(FLOOD LIGHT INSTALLATION)
2		235714001	WASHER-5/16 SAE HARD ZINC PLTD	4	
3		278997001	VALVE - THREE SPEED LOOP FLUSH	1	(BREAKDOWN FIG 14-24)
4		278957001	FITTING - 12 MOR X 16 MFFOR	1	
5		53826001	#10M O-RING-#8M JIC ST.	2	
6		65565001	FITTING - 6M O-RING X 6M JIC ST.	2	
7		60907001	FITTING-16M JICX16M STR ADAPT	2	
8		279139001	HOSE - 1” X 246” 16 FSJIC ST/45 G6K	2	
9		279076001	HOSE-1X203 16 FSJIC ST/45 G6K	2	(10’ RACK)
10		278968001	TUBE - GEARBOX VALVE D1	1	
11		278966001	TUBE - GEARBOX VALVE C1	1	
12		278967001	TUBE - GEARBOX VALVE C2	1	
13		278970001	TUBE - GEARBOX VALVE D2	1	
14		278962001	TUBE - GEARBOX VALVE B2	1	
15		278964001	TUBE - GEARBOX VALVE B1	1	
16		278963001	TUBE - GEAR BOX VALVE A2	1	
17		278965001	TUBE - GEARBOX VALVE A1	1	
18		250523001	BOLT-5/16-18 X 4 1/2 GR8 HEX Y	2	(15’ RACK)
19		53837001	FITTING - 8M O-RING X 8M JIC 90 DEGREE	1	
20		279140001	HOSE - 1/2” X 247” 8FSJIC ST/ST M3K	1	(15’ RACK)
21		294605001	HOSE - HYD - .50 X 206 - 8FSJ - ST/ST - 3000PSI	1	(10’ RACK)
22		278956001	FITTING - 12 MOR X 16 MFFOR 90 DEG	3	
23		279828001	SWITCH - 110 TEMPERATURE	1	
24		277739001	HARNESS - CARRIAGE	1	
25		278996001	HARNESS - HOSE CARRIER	1	(15’ RACK)
26		294632001	HARNESS - HOSE CARRIER	1	(10’ RACK)

https://truckmanualshub.com/

Solenoid Valve Assembly - Three Speed Gearbox Fig 4-23r01

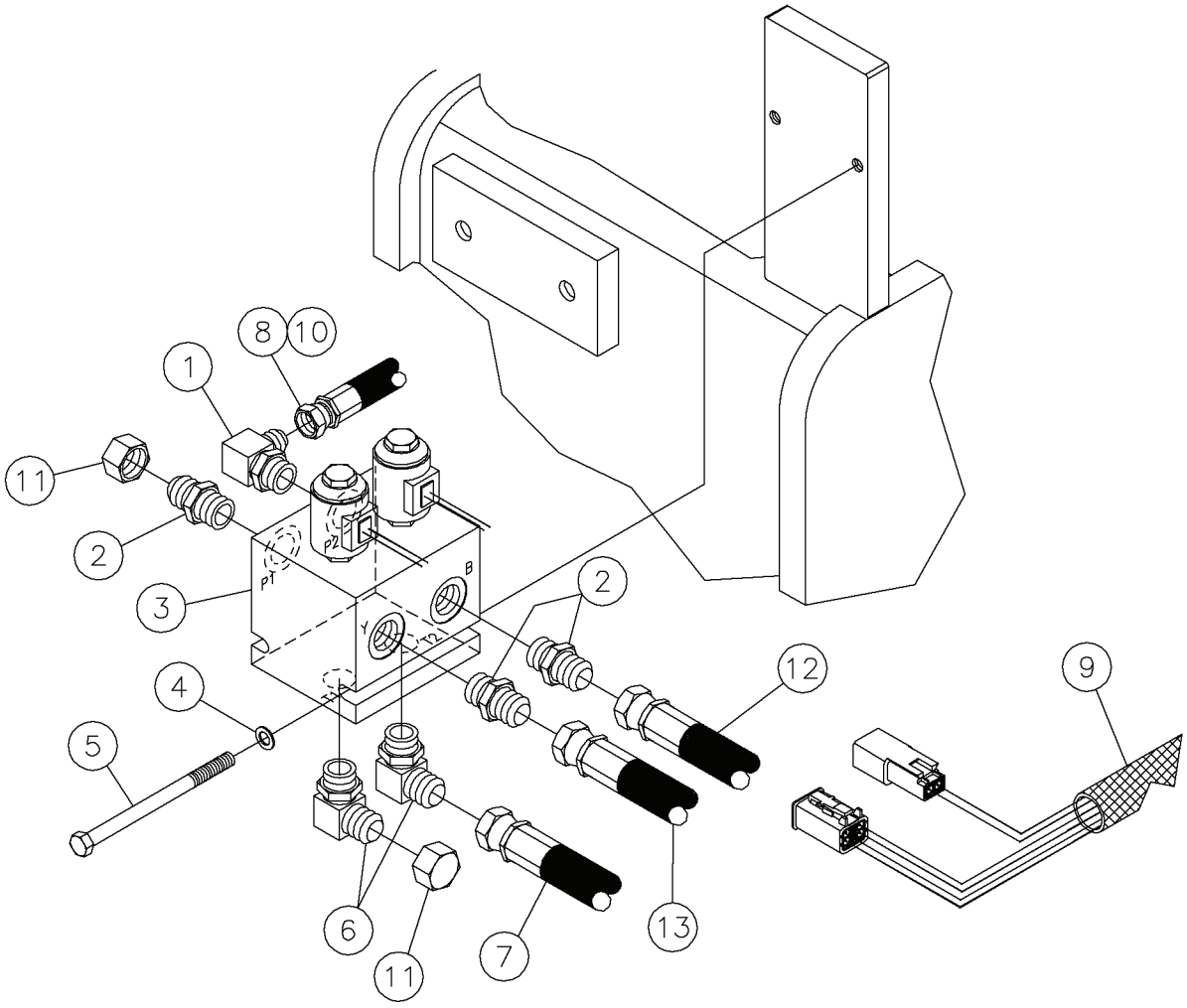

https://truckmanualshub.com/

Solenoid Valve Assembly - Three Speed Gearbox Fig 4-23r01

REF. NO.	*	PART NO.	DESCRIPTION	QTY.	REMARKS
		Revision Date	July, 2004		Update In Illustration & Parts List.
1		57950001	FITTING-90-4MJ-6MORBA	1	
2		65565001	FITTING - 6M O-RING X 6M JIC ST.	3	
3		276485001	VALVE - 2 SPEED / BRAKE	1	(BREAKDOWN FIG. 14-23)
4		235716001	WASHER - FLATSTRL - .25 -.28 X .63 - .06 - CZ	2	
5		244204001	BOLT-1/4-20X3 1/2 GR8 ZNC PLTD	2	
6		59426001	FITTING - 90-6MJ-6MORBA	2	
7		57940739	HOSE-3/8X27 6FS JIC 3000 PSI	1	
8		281838001	HOSE - 1/4 X 244 4FS ST/ST 3000 PSI	1	(15’ RACK)
9		277739001	HARNESS - CARRIAGE	1	(10” RACK)
10		53843555	HOSE-1/4X200 4FS JIC 3000 PSI	1	
11		59403001	CAP NUT - 6 JIC	2	
12		278961001	HOSE - 3/8 X 21 6FSJIC ST/90 3000PSI	1	
13		278960001	HOSE - 3/8 X 23 6FSJIC ST/90 3000PSI	1	

https://truckmanualshub.com/

Solenoid Valve Assembly - Three Speed Gearbox Fig 4-23

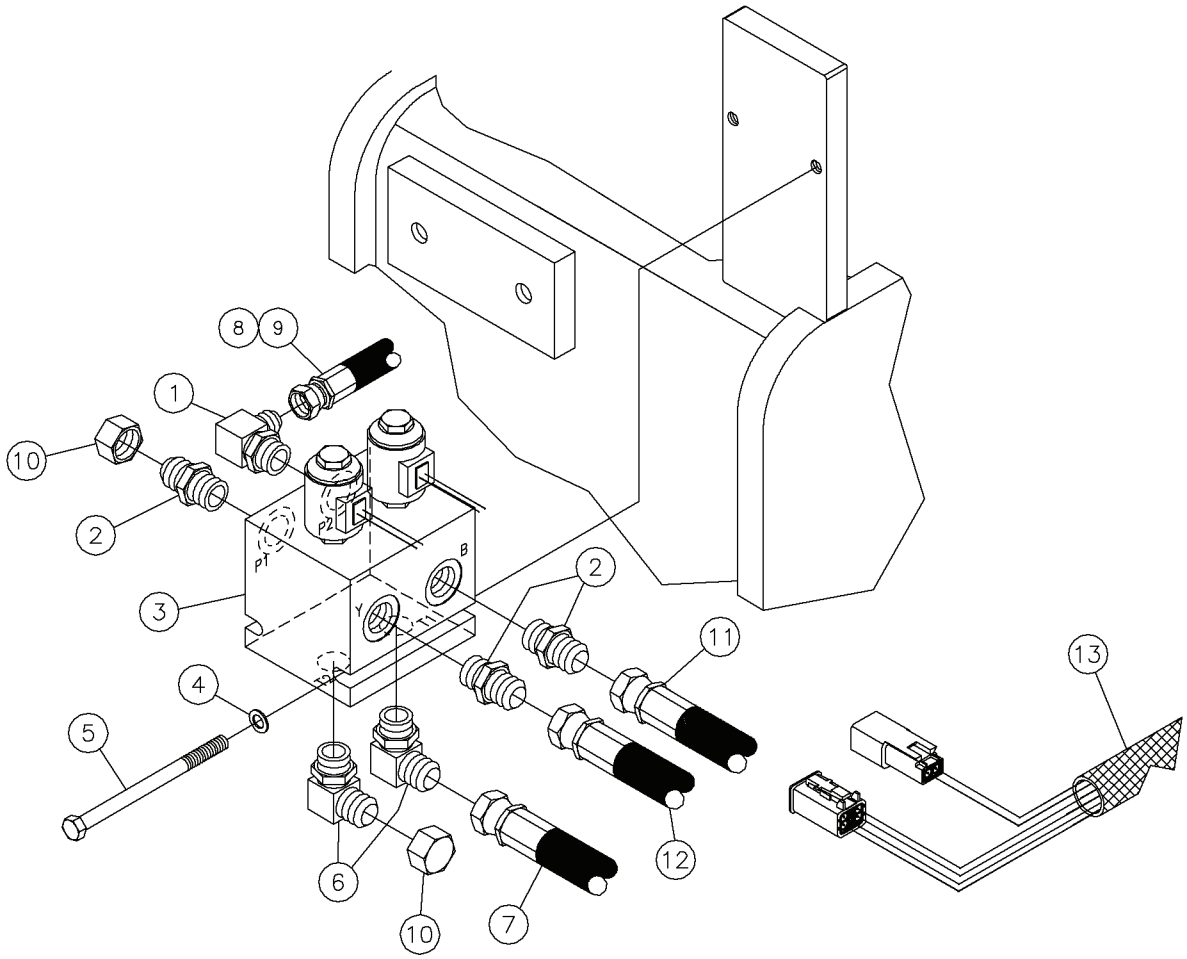

Solenoid Valve Assembly - Three Speed Gearbox Fig 4-23

REF. NO.	*	PART NO.	DESCRIPTION	QTY.	REMARKS
1		57950001	FITTING-90-4MJ-6MORBA	1	
2		65565001	FITTING - 6M O-RING X 6M JIC ST.	4	
3		276485001	VALVE - 2 SPEED / BRAKE	1	(BREAKDOWN FIG 14-23)
4		235716001	WASHER-1/4 SAE HARD ZINC PLTD	2	
5		244204001	BOLT-1/4-20X3 1/2 GR8 ZNC PLTD	2	
6		59426001	FITTING - 6M JIC X 6M O-RING ADJ 90 ELBOW	2	
7		57940649	HOSE-3/8X25 6FS JIC 3000 PSI	1	
8		281838001	HOSE - 1/4 X 244 4FS ST/ST 3000 PSI	1	
8		279051001	HOSE-3/8X20 6FS JIC-6FS 3000	1	
9		53843555	HOSE-1/4X200 4FS JIC 3000 PSI		
10		59403001	CAP NUT - 6 JIC	2	
11		278961001	HOSE - 3/8 X 21 6FSJIC ST/90 3000PSI	1	
12		278960001	HOSE - 3/8 X 23 6FSJIC ST/90 3000PSI	1	
13		277739001	HARNESS - CARRIAGE	1	
15		278969001	TUBE - GEARBOX VALVE G	1	

https://truckmanualshub.com/

Control Valve Assembly - Transport Drive Fig 4-24r01

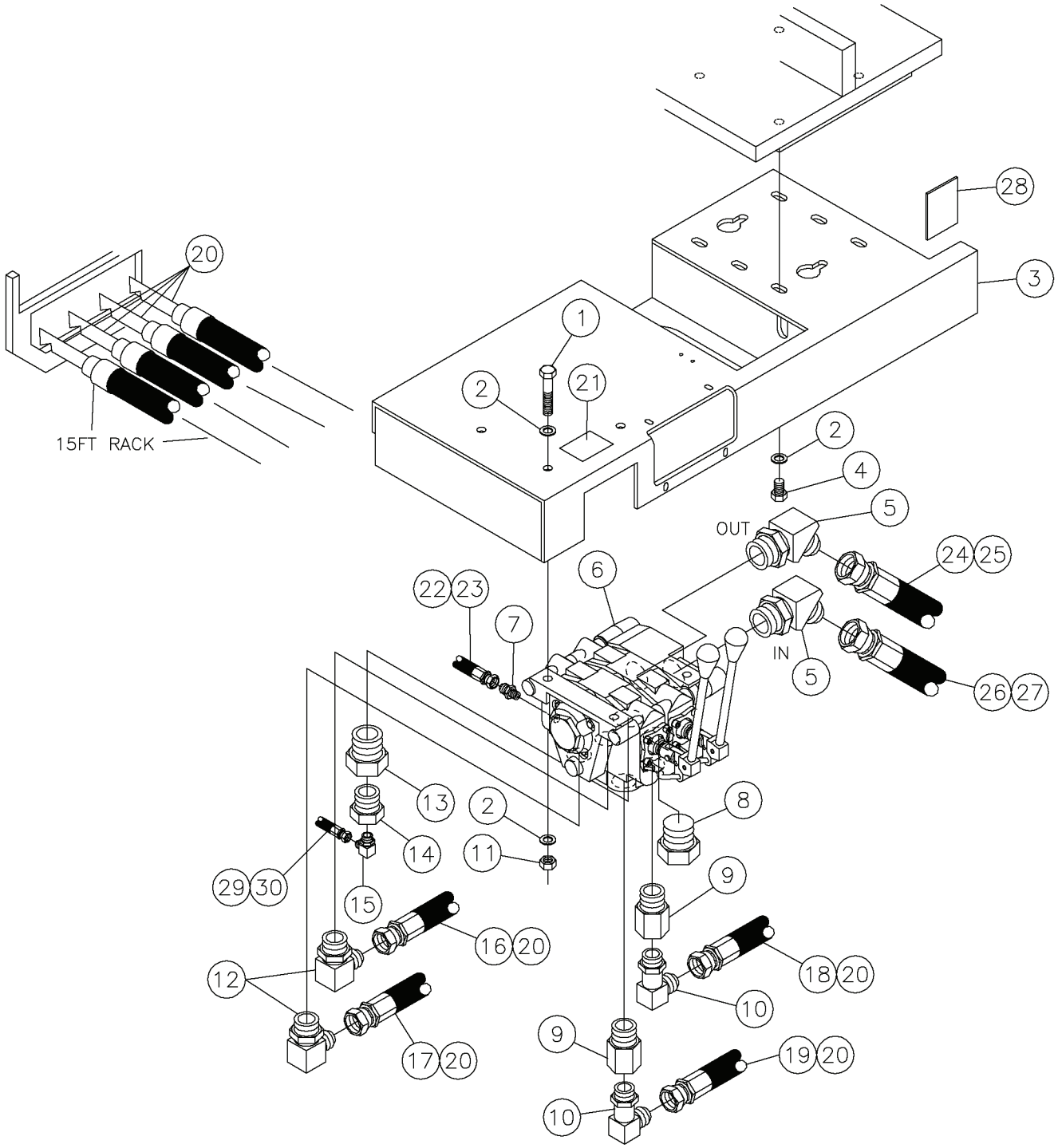

https://truckmanualshub.com/

Control Valve Assembly - Transport Drive Fig 4-24r01

REF. NO.	*	PART NO.	DESCRIPTION	QTY.	REMARKS
		Revision Date	June, 2004		Update In Illustration & Parts List.
1		250573001	BOLT-1/2-13 X 2 1/2 GR8 HX Y/Z	3	
2		485025	WASHER-1/2 FLAT-HARDENED-YZ	10	
3		277213001	MOUNT - TRANSPORT VALVE	1	
4		235728001	BOLT-1/2-13X3/4 GR8 ZINC PLTD	4	
5		276383001	FITTING-16JIC/20 ORING 45 ELBW	2	
6		251115001	VALVE-2 SECTION V40-1145	1	(BREAKDOWN FIG 14-28)
7		65569001	4M X 6M JIC ST.	1	
8		81704001	FITTING-20M PLUG	1	
9		71252001	FITTING - STR - 16MORB - 12FORB	2	
10		278867001	FITTING-12M X 12M JIC LONG 90	2	
11		235731001	NUT-1/2-13 GR8 ZINC PLTD	4	
12		78057001	FITTING-90-12MJ-16MORBA	2	
13		79498001	FITTING - STR - 20MORB - 16FORB	1	
14		279128001	FITTING - STR - 16MORB -6FORB	1	
15		57950001	FITTING-90-4MJ-6MORBA	1	
16		294593001	HOSE - HYD - .75 X 21 - 12FSJ - ST/90 - 3000PSI	1	(10’ RACK)
17		294594001	HOSE - HYD -.75 X 20 - 12FSJ - ST/90 - 3000PSI	1	(10’ RACK)
18		53845729	HOSE-3/4X22 12FS JIC MEGA 3000	1	(10’ RACK)
19		53845431	HOSE-3/4X18 12FSJICST/12FSJC90	1	(10’ RACK)
20		278862001	TUBE - TRACK DRIVE	4	(15’ RACK)
21		700IB354	DECAL - CONTROL TRACK	1	
22		57940179	HOSE-3/8X140 6FS JIC (100R2)	1	(15’ RACK)
23		57940353	HOSE-3/8X90 6FSJIC 3000 PSI	1	(10’ RACK)
24		279054001	HOSE-1X126 16FSJIC ST/ST M3K	1	(15’ RACK)
25		294595001	HOSE - HYD - 1 X 81 - 16FSJ - ST/ST - 3000PSI	1	(10’ RACK)
26		279048001	HOSE-1X134 16FSJIC ST/ST M3K	1	(15’ RACK)
27		294596001	HOSE - HYD - 1 X 84 - 16FSJ - ST/ST - 3000PSI	1	(10’ RACK)
28		276489001	STOP - CUSHION COVER	1	
29		279046001	HOSE-1/4X82 4FSJIC ST/ST M3K	1	(15’ RACK)
30		258206001	HOSE-1/4 X 15 4FS JIC ST/ST 3000 PSI	1	(10’ RACK)

https://truckmanualshub.com/

Control Valve Assembly - Transport Drive Fig 4-24

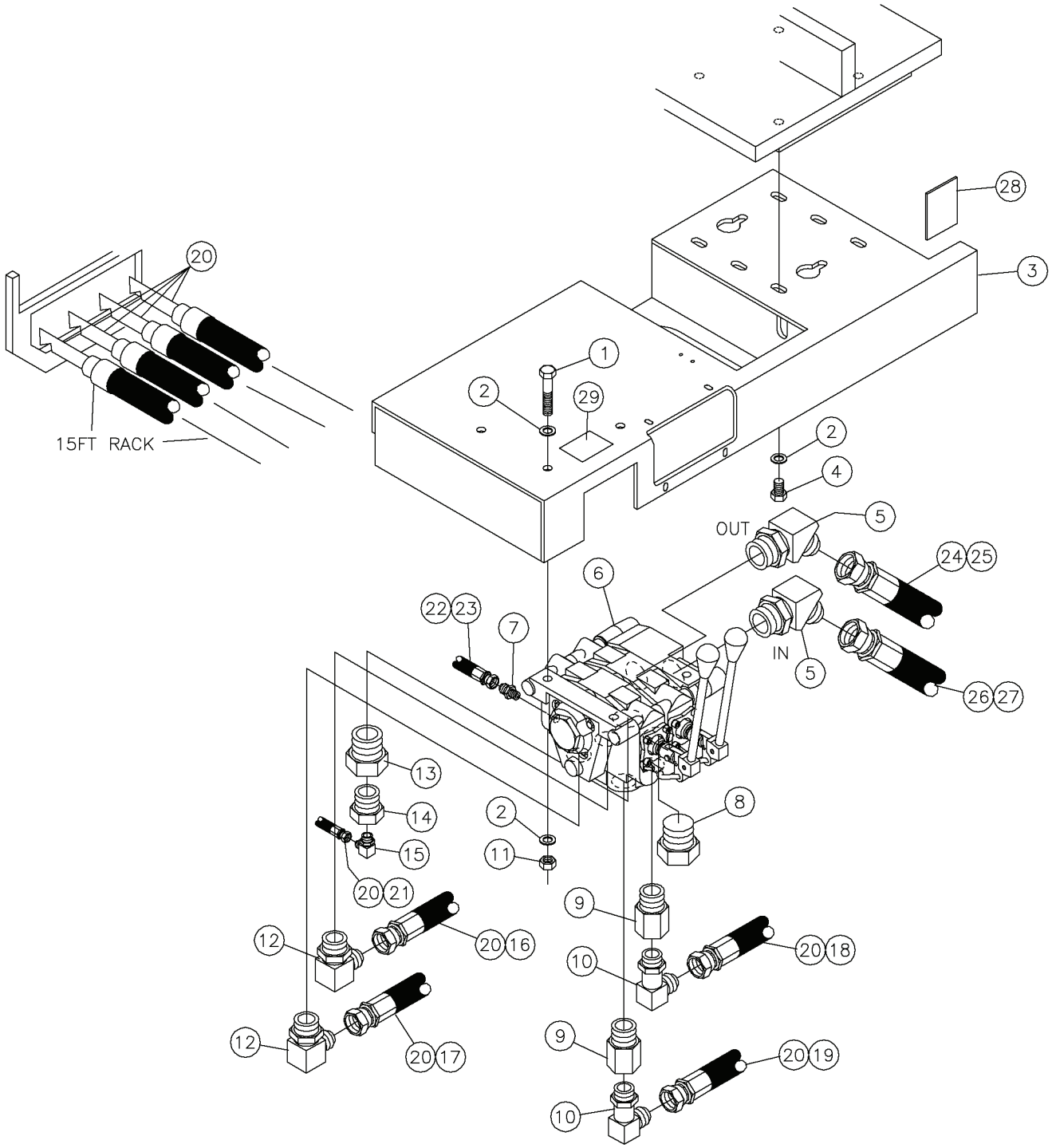

https://truckmanualshub.com/

Control Valve Assembly - Transport Drive Fig 4-24

REF. NO.	*	PART NO.	DESCRIPTION	QTY.	REMARKS
1		250573001	BOLT-1/2-13 X 2 1/2 GR8 HX Y/Z	3	
2		485025	WASHER-1/2 FLAT-HARDENED-ZINC	10	
3		277213001	MOUNT - TRANSPORT VALVE	1	
4		235728001	BOLT-1/2-13X3/4 GR8 ZINC PLTD	4	
5		276383001	FITTING-16JIC/20 ORING 45 ELBW	2	
6		251115001	VALVE-2 SECTION V40-1145	1	(BREAKDOWN FIG 14-28)
7		65569001	FITTING - 4M X 6M JIC ST.	1	
8		81704001	FITTING-20M PLUG	1	
9		71252001	FITTING-12FOR X 16MOR ADAPTER	2	
10		278867001	FITTING-12M X 12M JIC LONG 90	2	
11		235731001	NUT-1/2-13 GR8 ZINC PLTD	4	
12		78057001	FITTING-16MX12M JIC 90 DEG	2	
13		79498001	FITTING-20MX16F ST. REDUCER	1	
14		279128001	REDUCER - 16M X 6F ORING	1	
15		57950001	FITTING-90-4MJ-6MORBA	1	
16		294593001	HOSE - HYD - .75 X 21 - 12FSJ - ST/90 - 3000PSI	1	(10’ RACK)
17		294594001	HOSE - HYD -.75 X 20 - 12FSJ - ST/90 - 3000PSI	1	(10’ RACK)
18		53845729	HOSE-3/4X22 12FS JIC MEGA 3000	1	(10’ RACK)
19		53845431	HOSE-3/4X18 12FSJICST/12FSJC90	1	(10’ RACK)
20		279046001	HOSE-1/4X82 4FSJIC ST/ST M3K	1	(15’ RACK)
20		278862001	TUBE - TRACK DRIVE	4	(15’ RACK)
21		258206001	HOSE-1/4 X 15 4FS JIC ST/ST 3000 PSI	1	(10’ RACK)
22		57940179	HOSE-3/8X140 6FS JIC (100R2)	1	(15’ RACK)
23		57940353	HOSE-3/8X90 6FSJIC 3000 PSI	1	(10’ RACK)
24		279054001	HOSE-1X126 16FSJIC ST/ST M3K	1	(15’ RACK)
25		294595001	HOSE - HYD - 1 X 81 - 16FSJ - ST/ST - 3000PSI	1	(10’ RACK)
26		279048001	HOSE-1X134 16FSJIC ST/ST M3K	1	(15’ RACK)
27		294596001	HOSE - HYD - 1 X 84 - 16FSJ - ST/ST - 3000PSI	1	(10’ RACK)
28		276489001	STOP - CUSHION COVER	1	
29		700IB354	DECAL - CONTROL TRACK	1	

https://truckmanualshub.com/

Control Valve Assembly - Outrigger/Rack Fig 4-25

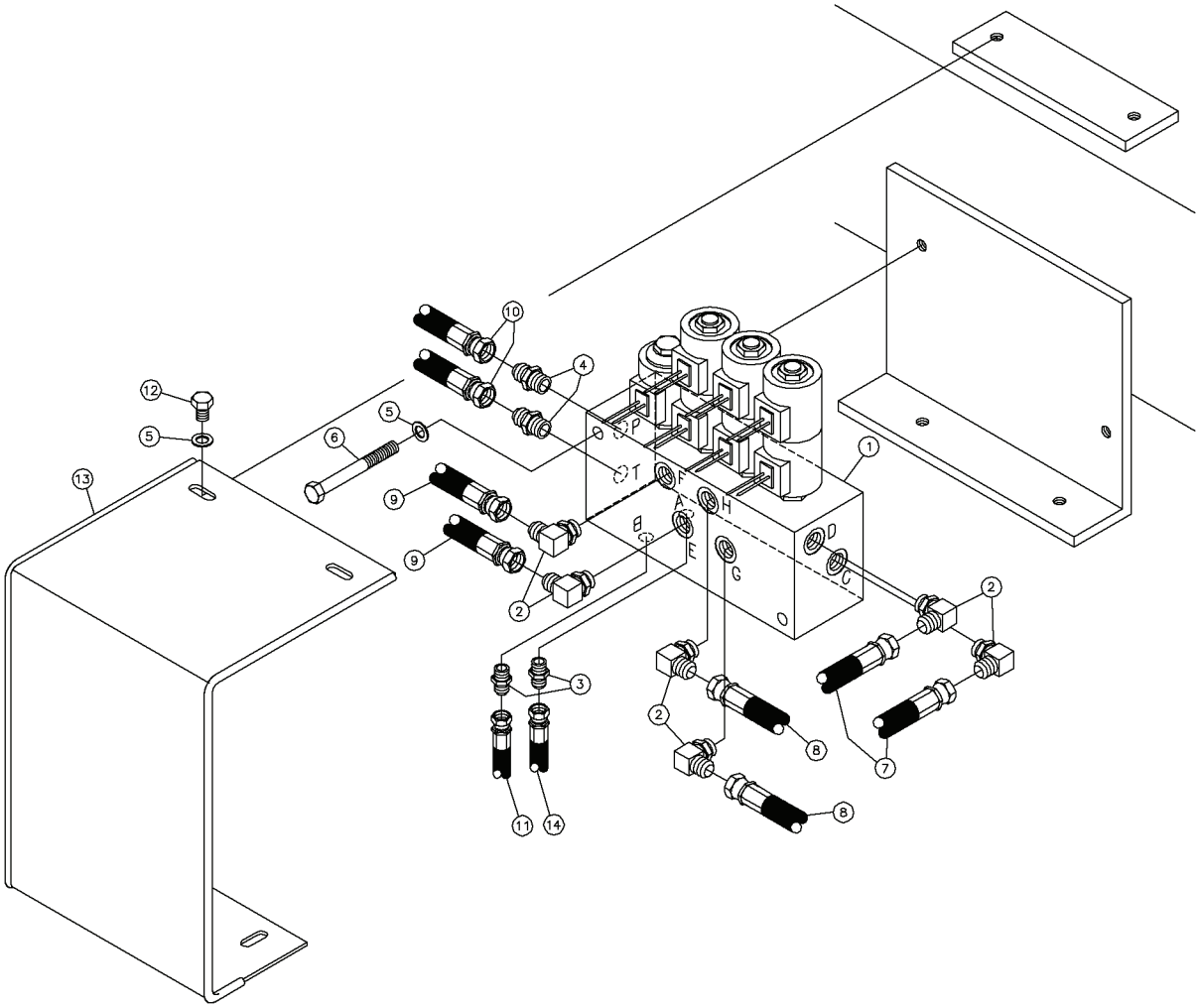

https://truckmanualshub.com/

Control Valve Assembly - Outrigger/Rack Fig 4-25

REF. NO.	*	PART NO.	DESCRIPTION	QTY.	REMARKS
1		288661001	VALVE-4 SECTION SOLENOID	1	(BREAKDOWN FIG 14-16)
2		122606001	FITTING-6MX6M JIC90 DEGW/ RSTS	6	
3		60908001	FITTING-4MX4M JIC STR ADAPTER	2	
4		65565001	FITTING - 6M O-RING X 6M JIC ST.	2	
5		235713001	WASHER-3/8 SAE HARD ZINC PLTD	6	
6		240377001	BOLT-3/8-16X3 1/4 GR8 ZINC PLT	2	
7		57940257	HOSE-3/8X22 6FS JIC ST M1T	2	
8		57940381	HOSE-3/8X38 6FSJIC SAE-100R1	2	
9		278801001	HOSE-3/8X52 6FSJIC ST/90 M3K	2	
10		57940419	HOSE-3/8X41 6FS JIC 3500 PSI	2	
11		53843199	HOSE-1/4X118 4FS JIC 3000 PSI	1	
12		240310001	BOLT-3/8-16X1/2 GR8 ZINC PLTD	4	
13		285555001	SHIELD - OUTRIGGER VALVE COVER	1	
14		279138001	HOSE - 1/4” X 122” 4FSJIC ST/ST M3K	1	

Control Valve Assembly - Brake Fig 4-26

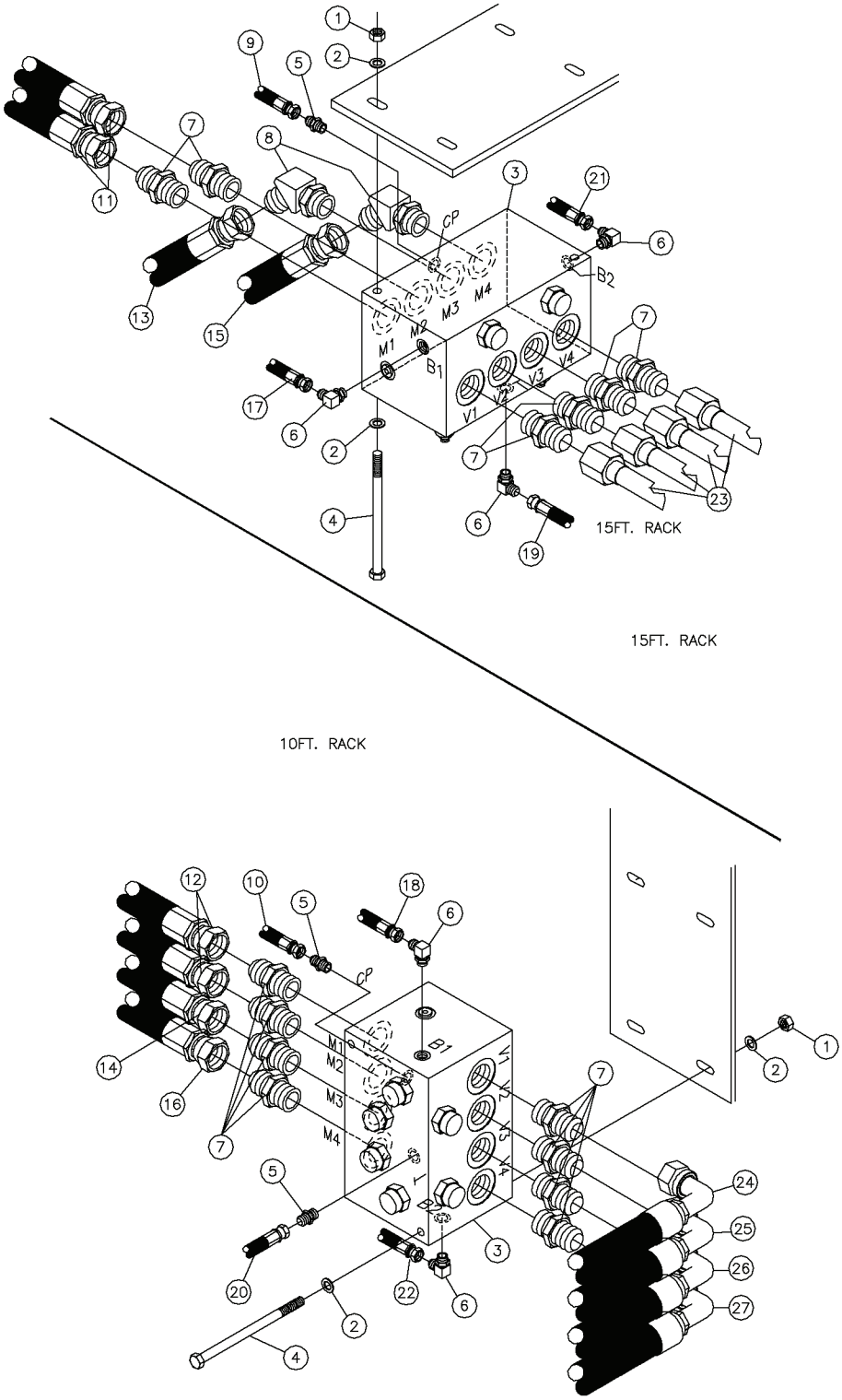

https://truckmanualshub.com/

Control Valve Assembly - Brake Fig 4-26

REF. NO.	*	PART NO.	DESCRIPTION	QTY.	REMARKS
1		235725001	NUT-3/8-16 GR8 ZINC PLTD	2	
2		235713001	WASHER-3/8 SAE HARD ZINC PLTD	4	
3		251114001	VALVE - TRACK DRIVE	1	(BREAKDOWN FIG 14-17)
4		238214001	BOLT 3/8-16 X 6” GR8 HEX Y\ZINC	2	
5		60908001	FITTING-4MX4M JIC STR ADAPTER	1	
6		59423001	FIT-4M JICX4M ADJ.90 DEG.ELBOW	3	
7		53828001	#12M O-RING-#12M JIC ST.	6	
8		60718001	FITTING - 12M JICX12M ADJ.45 DEG.EL	2	
9		53843075	HOSE-1/4X50 4FS JIC (100R1)	1	
10		53843681	HOSE-1/4X11 4FSJIC-4FSJIC 90	1	(10’ RACK)
11		53845457	HOSE-3/4X28 12FS JIC 3000 PSI	2	(15’ RACK)
12		294588001	HOSE - HYD - .75 X 47 - 12FSJ - ST/45 - 3000PSI	1	(10’ RACK)
13		278803001	HOSE-3/4X40 12FSJIC ST/90 M3K	1	(15’ RACK)
14		294590001	HOSE - HYD -.75 X 60 - 12FSJ - ST/90 - 3000PSI	1	(10’ RACK)
15		53845535	HOSE-3/4X38 12FS JIC 3000 PSI	1	(15’ RACK)
16		294589001	HOSE - HYD- .75 X 58 -12FSJ - ST/90 - 3000PSI	1	(10’ RACK)
17		53843701	HOSE-1/4X42 4FSST/4FS90 2750	1	(15’ RACK)
18		294592001	HOSE - HYD- .25 X 63 - 4FSJ - ST/90 - 3000PSI	1	(10’ RACK)
19		279046001	HOSE-1/4X82 4FSJIC ST/ST M3K	1	(15’ RACK)
20		258206001	HOSE-1/4 X 15 4FS JIC ST/ST 3000 PSI	1	(10’ RACK)
21		279144001	HOSE - 1/4” X 50” 4FSJIC ST/90 M3K	1	(15’ RACK)
22		294591001	HOSE - HYD - .25 X 76 - 4FSJ - ST/90 - 3000PSI	1	(10’ RACK)
23		278862001	TUBE - TRACK DRIVE	4	(15’ RACK)
24		294594001	HOSE - HYD -.75 X 20 - 12FSJ - ST/90 - 3000PSI	1	(10’ RACK)
25		53845431	HOSE-3/4X18 12FSJICST/12FSJC90	1	(10’ RACK)
26		294593001	HOSE - HYD - .75 X 21 - 12FSJ - ST/90 - 3000PSI	1	(10’ RACK)
27		53845729	HOSE-3/4X22 12FS JIC MEGA 3000	1	(10’ RACK)

https://truckmanualshub.com/

Control Valve Assembly - Return Fig 4-27

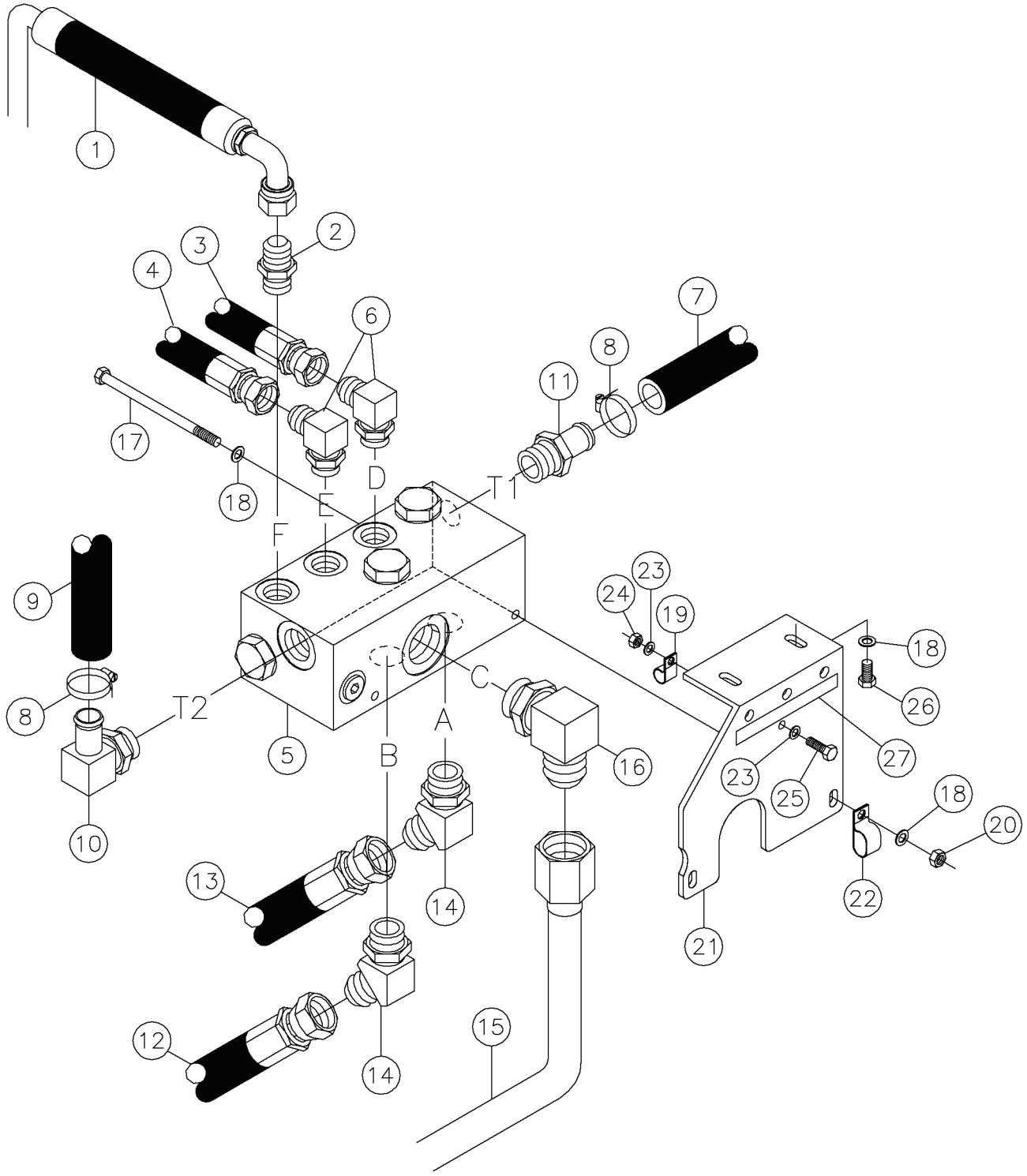

Control Valve Assembly - Return Fig 4-27

REF. NO.	*	PART NO.	DESCRIPTION	QTY.	REMARKS
1		278762001	TUBE - CASE DRAIN	1	
2		53828001	#12M O-RING-#12M JIC ST.	1	
3		53845151	HOSE-3/4X12 12FS JIC (100R1)	1	
4		53845389	HOSE-3/4X14 12FS JIC 300 PSI	1	
5		251107001	VALVE - HYDRAULIC RETURN	1	(BREAKDOWN FIG 14-18)
6		59410001	FITTING - 12M JICX12M ADJ. 90 DEG.ELBOW	2	
7		278794001	HOSE-1X12 W/ NO ENDS 250 PSI	1	
8		1580005	HOSE CLAMP - 1”	2	
9		278793001	HOSE-1X14 W/ NO ENDS 250 PSI	1	
10		100000001	FITTING-16MORINGX1”BEADED90DEG	1	
11		96709001	HOSE INSERT-16MX1 BEAD STR.	1	
12		287641001	HOSE - 1 X 36 16FS JIC ST/90 250 PSI	1	
13		278796001	HOSE-1X37 16FSJIC ST/90 250PSI	1	
14		53835001	#16M O-RING-#16M JIC 45 DEG.	2	
15		251228001	TUBE - LOWER OIL COOLER	1	
16		77137001	FITTING-20MX20M JIC 90 DEG.	1	
17		238214001	BOLT 3/8-16 X 6” GR8 HEX Y\ZINC	2	
18		235713001	WASHER-3/8 SAE HARD ZINC PLTD	6	
19		2595001	HOSE CLAMP - TS7FR 1/2”	1	
20		235725001	NUT-3/8-16 GR8 ZINC PLTD	2	
21		278752001	PLATE-RETURN VALVE MOUNT	1	
22		70076001	CLIP-CUSHION KMC CDV-0813	1	
23		235714001	WASHER-5/16 SAE HARD ZINC PLTD	2	
24		235741001	NUT-5/16-18 GR8 ZINC PLTD	1	
25		238209001	BOLT-5/16-18X1 GR8 NEX ZINC YC	1	
26		235726001	BOLT-3/8-16X3/4 GR8 HEX ZNCPLT	2	
27		7000B300	DECAL - TEST POINT	1	

https://truckmanualshub.com/

Rack Lift Cylinder Assembly Fig 4-28

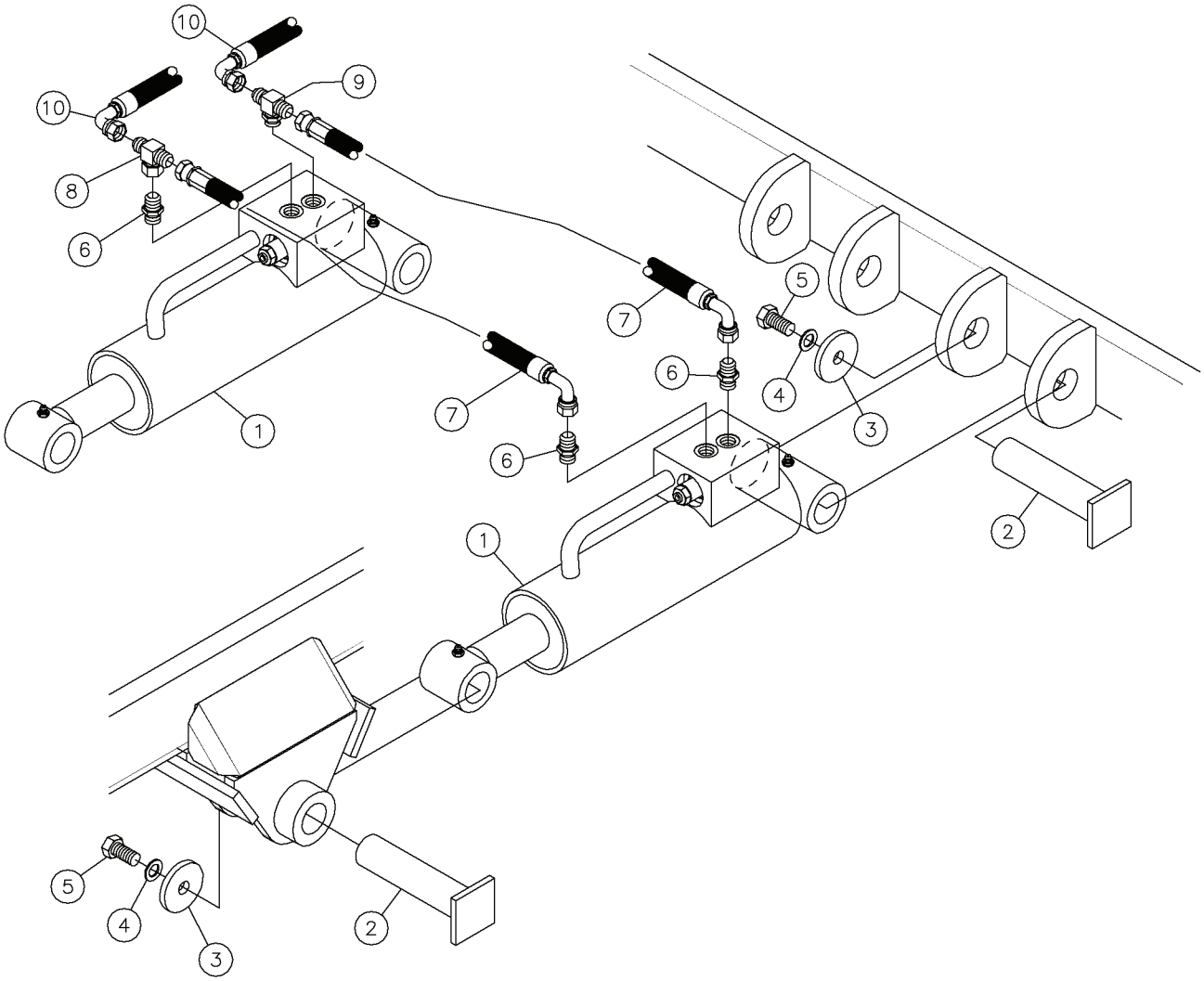

https://truckmanualshub.com/

Rack Lift Cylinder Assembly Fig 4-28

REF. NO.	*	PART NO.	DESCRIPTION	QTY.	REMARKS
1		278769001	CYLINDER-3 1/2”BORE X 7”STROKE	2	(BREAKDOWN FIG 14-34)
2		277202001	PIN-CYLINDER RACK	4	
3		281787001	SLUG -.53 ID X 2.00 OD - 1/4”	4	
4		485025	WASHER-1/2 FLAT-HARDENED-ZINC	4	
5		235729001	SCREW-HCS-.50-13X1.00-GR8-YZ	4	
6		65565001	FITTING - 6M O-RING X 6M JIC ST.	3	
7		278804001	HOSE-3/8X12 6FSJIC ST/90 M3K	2	
8		60852001	FITTING - 6M JICX6FS JIC SWIV.NUT B TEE	1	
9		68787001	FITTING-6M (BCH)X6M JICX6M JIC	1	
10		278801001	HOSE-3/8X52 6FSJIC ST/90 M3K	2	

https://truckmanualshub.com/

Outrigger Assembly Fig 4-29

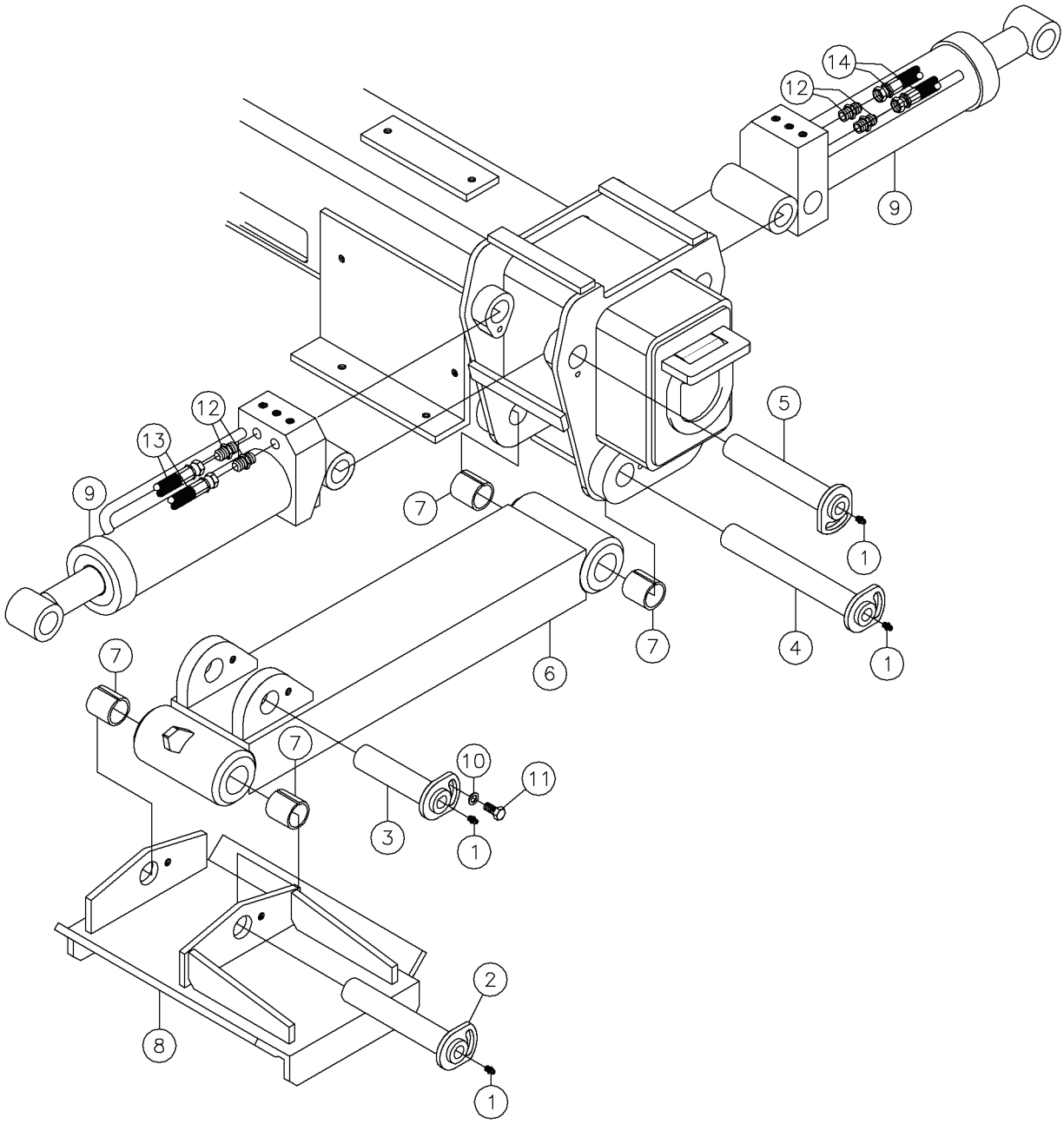

Outrigger Assembly Fig 4-29

REF. NO.	*	PART NO.	DESCRIPTION	QTY.	REMARKS
1		598001	ZERK-1/4” NF ST GREASE	8	
2		251495003	PIN ASSEMBLY-PAD PIVOT	2	(INC REF 1)
3		251494003	PIN ASSEMBLY - CYLINDER	2	(INC REF 1)
4		251492003	PIN ASSEMBLY-ARM PIVOT	2	(INC REF 1)
5		251493003	PIN ASSEMBLY - CYLINDER	5	(INC REF 1)
6		251477003	OUTRIGGER ASSEMLY-REAR	2	(INC FOUR OF REF 6)
7		1835027	BSHG.-STL.-1 1/2X1 1/4X1 1/2	8	
8		278907001	PAD-OUTRIGGER	2	
9		278954001	CYLINDER - 4 X 7 W/ PO CHECKS	2	(BREAKDOWN FIG 14-37)
10		235713001	WASHER-3/8 SAE HARD ZINC PLTD	8	
11		235726001	BOLT-3/8-16X3/4 GR8 HEX ZNCPLT	8	
12		65565001	FITTING - 6M O-RING X 6M JIC ST.	4	
13		57940257	HOSE-3/8X22 6FS JIC ST M1T	2	
14		57940381	HOSE-3/8X38 6FSJIC SAE-100R1	2	

https://truckmanualshub.com/

Water Valve On-Off Cylinder Assembly Fig 4-30r01

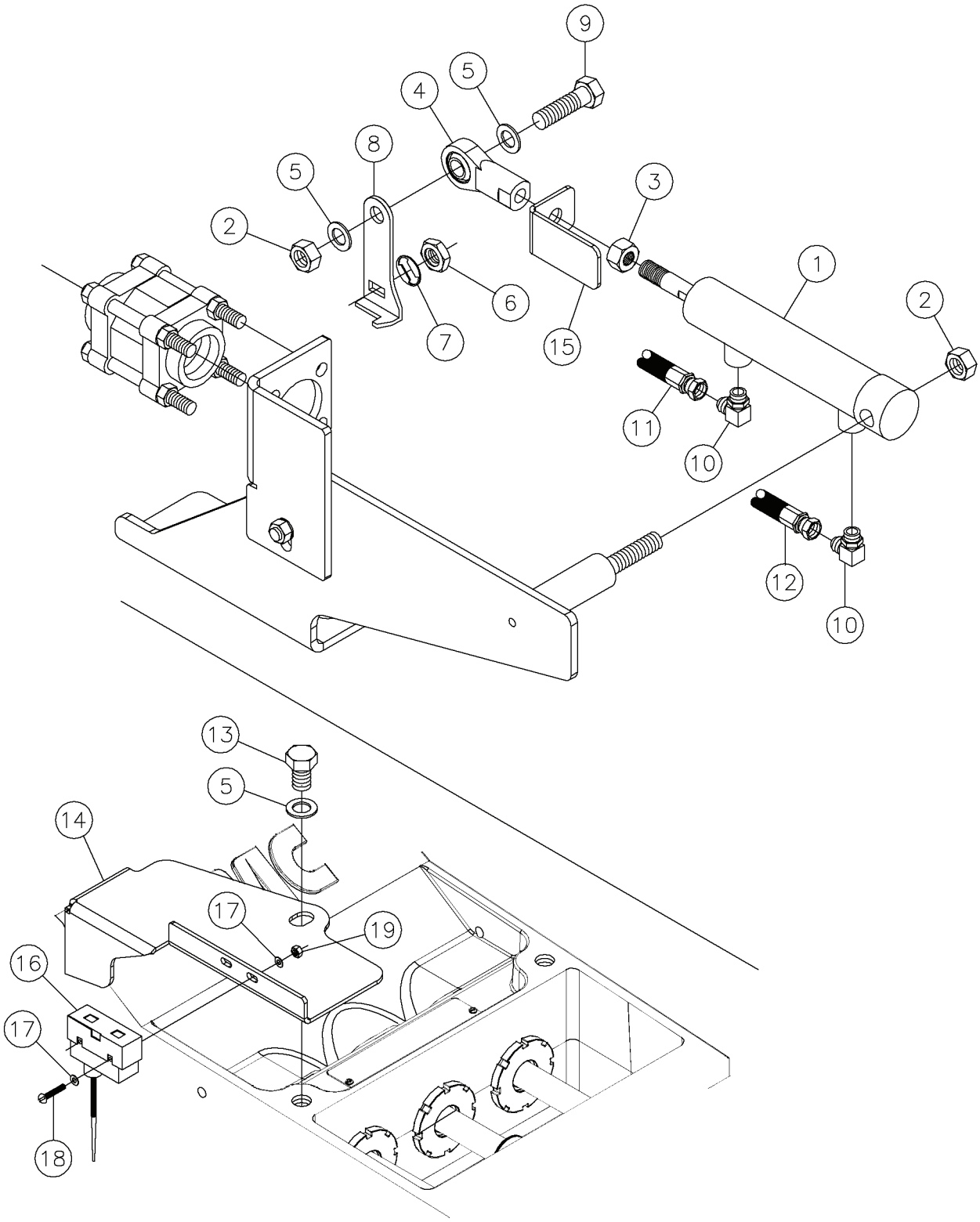

https://truckmanualshub.com/

Water Valve On-Off Cylinder Assembly Fig 4-30r01

REF. NO.	*	PART NO.	DESCRIPTION	QTY.	REMARKS
		Revision Date	June, 2004		Update In Illustration & Parts List.
1		287591001	CYLINDER - 1 X 3-1/2	1	(BREAKDOWN FIG. 14-41)
2		75382001	NUT-1/2-UNC GRADE 8 SLTL	2	
3		451001	NUT-1/2 N.F. HEX	1	
4		224291001	BALL JOINT-1/2-20 FEMALE THDS.	1	
5		485025	WASHER-1/2 FLAT-HARDENED-YZ	3	
6		245079003	STEM NUT	1	
7		245079009	STEM SPRING	1	
8		278002001	ARM-LEVER	1	
9		235721001	BOLT-1/2-13X1 1/2 GR8 ZINC PLT	1	
10		59423001	FIT-4M JICX4M ADJ.90 DEG.ELBOW	2	
11		53843199	HOSE-1/4X118 4FS JIC 3000 PSI	1	
12		279138001	HOSE - 1/4” X 122” 4FSJIC ST/ST M3K	1	
13		235728001	BOLT-1/2-13X3/4 GR8 ZINC PLTD	1	
14		296260375	PLATE - BALL VALVE SHIELD	1	
15		291705001	PLATE - PROXIMITY SWITCH TARGET	1	
16		283529001	SWITCH - WHISKER LIMIT W/3 PIN DEUTSCH	1	
17		57337001	WASHER-#6 FLAT	4	
18		144654001	SCREW-#8-32 X 1 1/2 STOVE	2	
19		69759001	LOCK NUT-#8-32 NYLON INSERT PL	2	

Water Valve On-Off Cylinder Assembly Fig 4-30

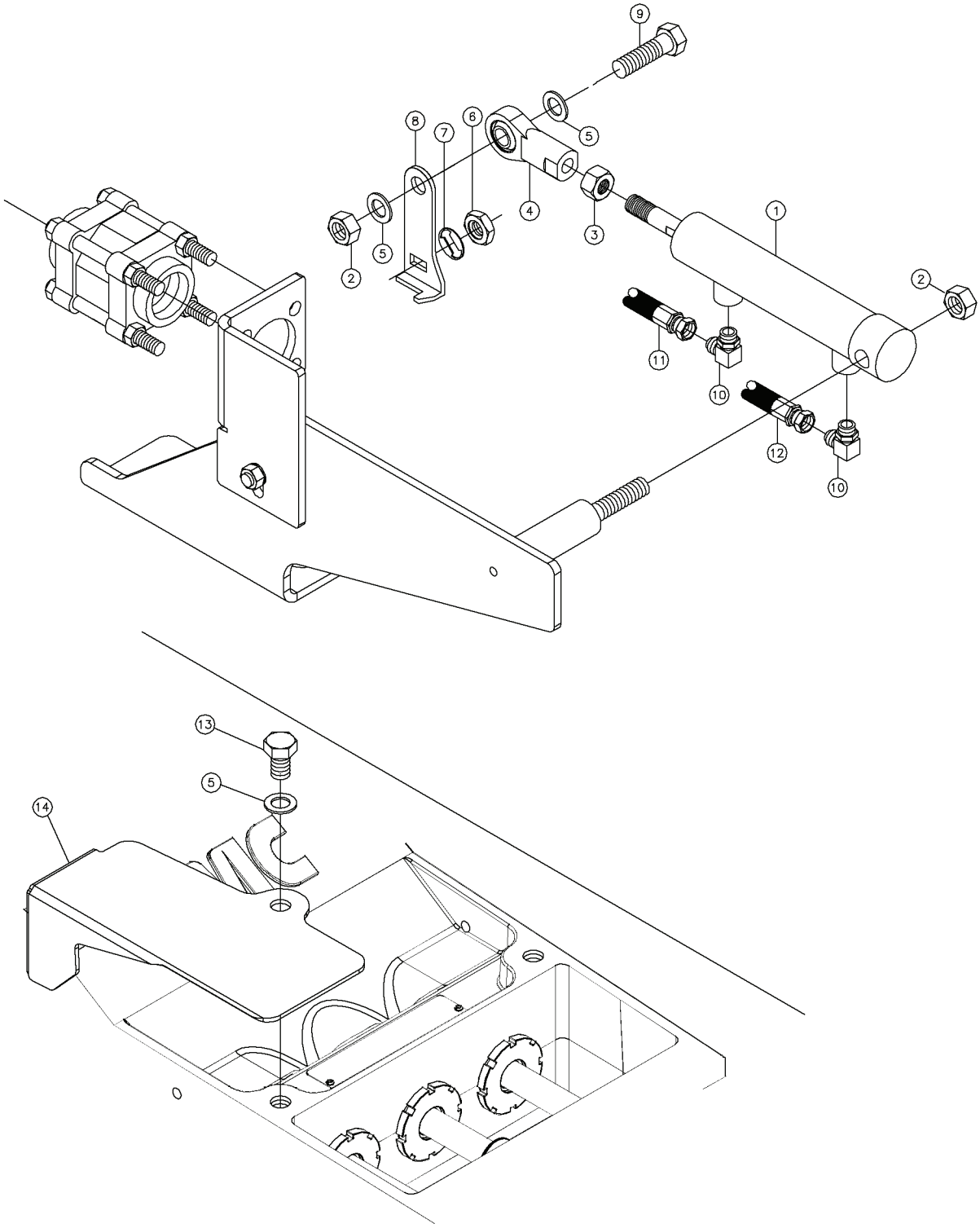

https://truckmanualshub.com/

Water Valve On-Off Cylinder Assembly Fig 4-30

REF. NO.	*	PART NO.	DESCRIPTION	QTY.	REMARKS
1		287591001	CYLINDER - 1 X 3-1/2	1	(BREAKDOWN FIG 14-41)
2		75382001	NUT-1/2-UNC GRADE 8 SLTL	2	
3		451001	NUT-1/2 N.F. HEX	1	
4		224291001	BALL JOINT-1/2-20 FEMALE THDS.	1	
5		485025	WASHER-1/2 FLAT-HARDENED-ZINC	3	
6		245079003	STEM NUT	1	
7		245079009	STEM SPRING	1	
8		278002001	ARM-LEVER	1	
9		235721001	BOLT-1/2-13X1 1/2 GR8 ZINC PLT	1	
10		59423001	FIT-4M JICX4M ADJ.90 DEG.ELBOW	2	
11		53843199	HOSE-1/4X118 4FS JIC 3000 PSI	1	
12		279138001	HOSE - 1/4” X 122” 4FSJIC ST/ST M3K	1	
13		235728001	BOLT-1/2-13X3/4 GR8 ZINC PLTD	1	
14		296260375	PLATE - BALL VALVE SHIELD	1	
15		291705001	PLATE - PROXIMITY SWITCH TARGET	1	

Oil Cooler Assembly Fig 4-31

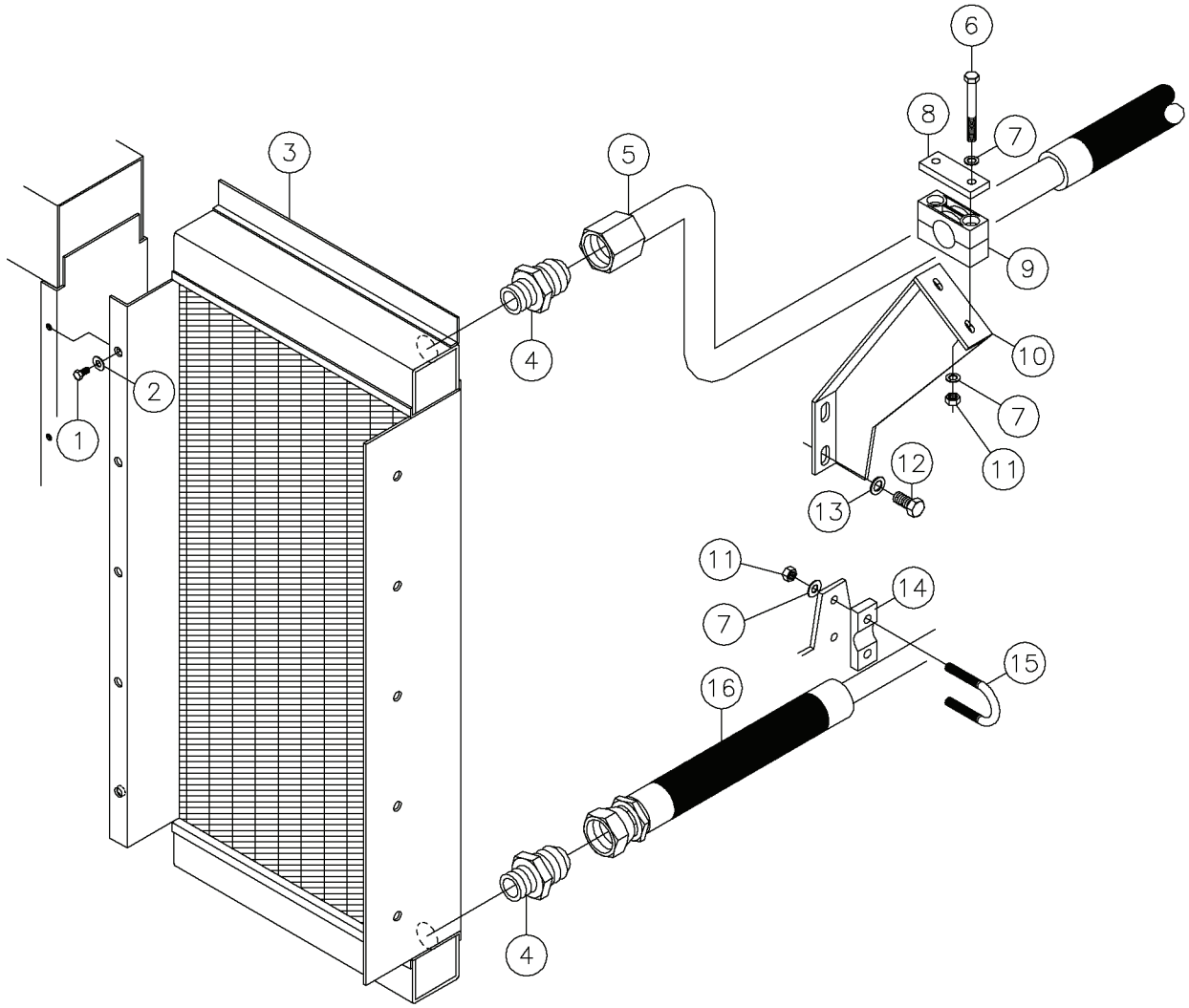

Oil Cooler Assembly Fig 4-31

REF. NO.	*	PART NO.	DESCRIPTION	QTY.	REMARKS
1		235740001	BOLT-5/16-18X1/2 GR8 ZINC PLT	5	
2		485005	WASHER-5/16 FLAT	5	
3		278861001	OIL COOLER	1	
4		86320001	FIT-ADAPT 16M ORINGX20MJIC STR	2	
5		251231001	TUBE - UPPER OIL COOLER	1	
6		240377001	BOLT-3/8-16X3 1/4 GR8 ZINC PLT	2	
7		235713001	WASHER-3/8 SAE HARD ZINC PLTD	6	
8		71220007	PLATE-HOSE CLAMP TOP	1	
9		217034003	CLAMP HALF-PLASTIC 1 1/4” ID	1	
10		278753001	MOUNT - TUBE CLAMP	10	
11		235725001	NUT-3/8-16 GR8 ZINC PLTD	4	
12		250516001	BOLT - 12M X 35M GR8 Y/ZINC	2	
13		238249001	WASHER - 12MM HARD Y/ ZINC	2	
14		285606001	SATTLE - HOSE SUPPORT	1	
15		285605001	U-BOLT - HOSE SUPPORT	1	
16		251228001	TUBE - LOWER OIL COOLER	1	

Hydraulic Oil Filter Assembly Fig 4-32

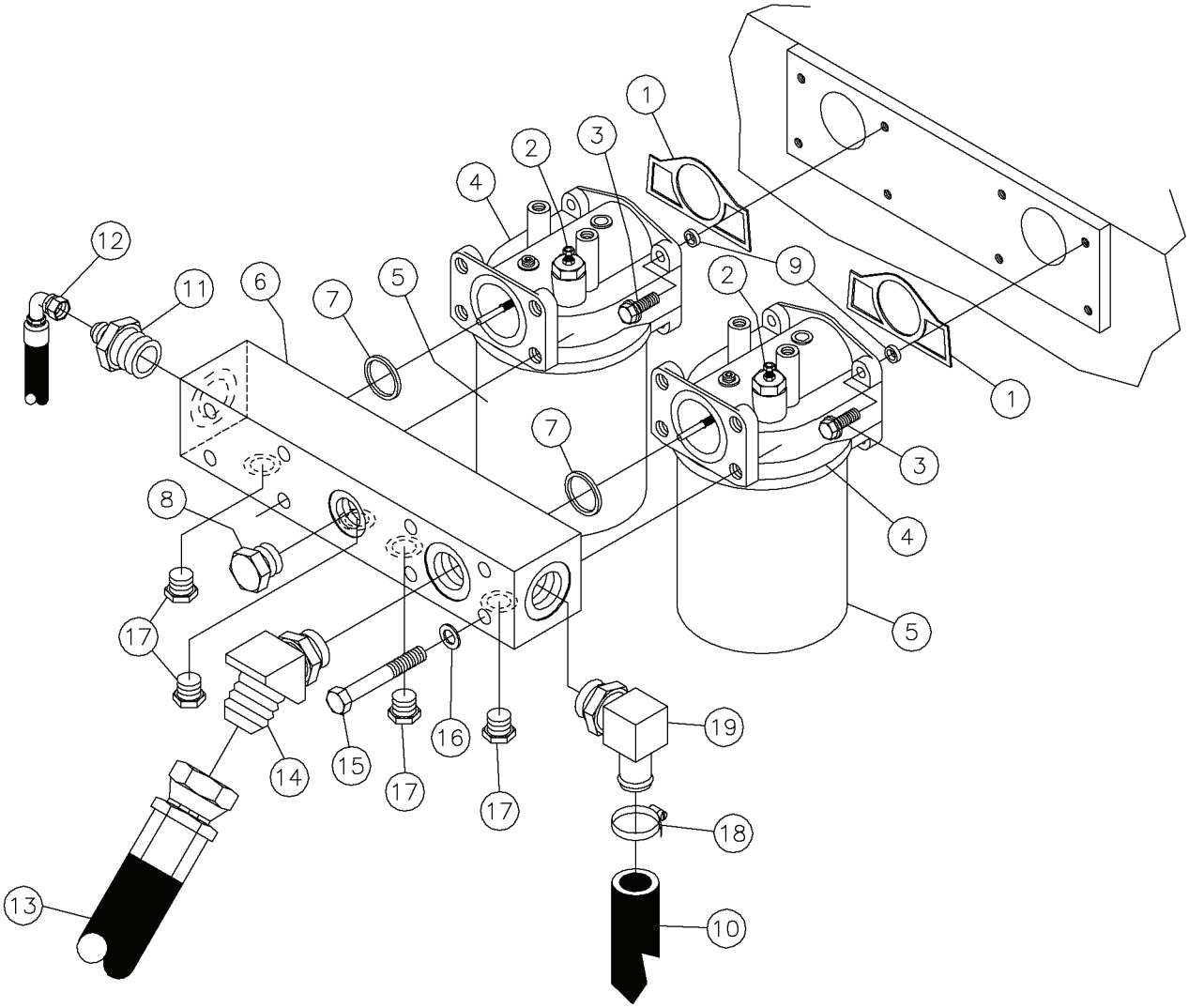

Hydraulic Oil Filter Assembly Fig 4-32

REF. NO.	*	PART NO.	DESCRIPTION	QTY.	REMARKS
1		251140003	GASKET	2	
2		251140005	SWITCH - FILTER RESTRICTION	2	
3		4474010	BOLT-5/16-18X1 FLG.WHIZ PLATED	8	
4		251140001	HEAD - FILTER	2	
5		251137001	FILTER -10 MICRON HYDRAULIC	2	
6		251454001	BLOCK - MANIFOLD	1	
7		72895001	O RING-SQ. #16 FLANGE	2	
8		67570001	PLUG - 12M	1	
9		278858003	SEAL- FLANGE (FLUOROCARBON)	8	
10		278793001	HOSE-1X14 W/ NO ENDS 250 PSI	1	
11		276382001	FITTING-16 O-RING X 6 JIC CONN	1	
12		57940619	HOSE-3/8X49 6FS JIC ST/90	1	
13		251231001	TUBE - UPPER OIL COOLER	1	
14		86234001	FITTING - 16M ORING X 20M JIC 45DEG.	1	
15		238213001	BOLT-1/2-13X3 3/4 GR8 HEX ZYC	8	
16		485025	WASHER-1/2 FLAT-HARDENED-ZINC	8	
17		56218001	PLUG-#8M	4	
18		1580009	HOSE CLAMP - 1 3/4”	1	
19		100000001	FITTING-16MORINGX1”BEADED90DEG	1	

https://truckmanualshub.com/

Hose Bulkhead Assembly Fig 4-33

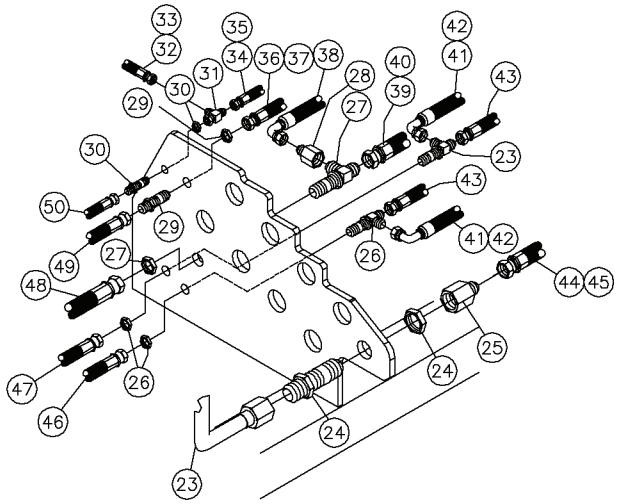

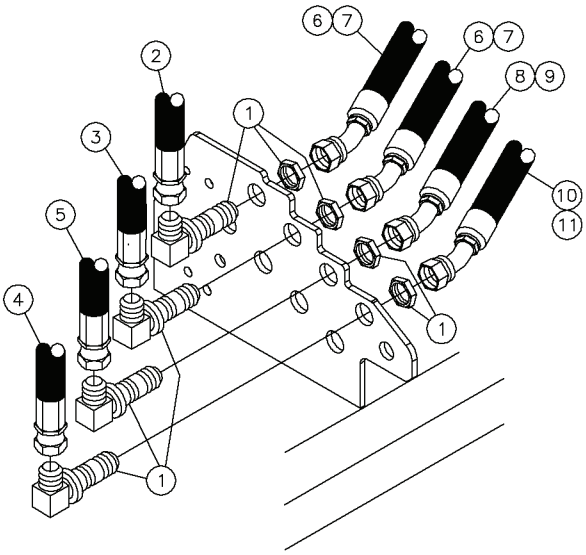

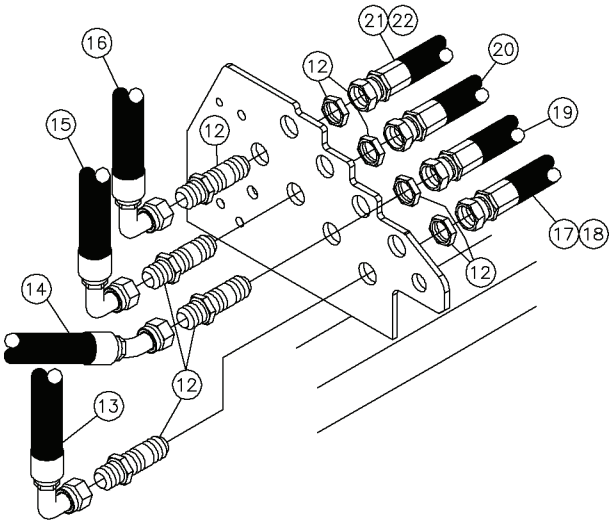

Hose Bulkhead Assembly Fig 4-33

REF. NO.	*	PART NO.	DESCRIPTION	QTY.	REMARKS
1		81785001	FIT-16M BULKHEAD JICX16M JIC90	4	
2		291531001	HOSE 1 X 18 16FSJIC ST/90 6000 PSI	1	
3		291529001	HOSE - 1 X 13.5 16FS JIC ST/90 6000 PSI	1	
4		278789001	HOSE-1X25 16 FSJIC ST/90 G6K	1	
5		291532001	HOSE - 1X 21 16FSJIC ST/90 6000 PSI	1	
6		279139001	HOSE - 1” X 246” 16 FSJIC ST/45 G6K	2	15’ RACK
7		279076001	HOSE-1X203 16 FSJIC ST/45 G6K	2	10’ RACK
8		279137001	HOSE - 1” X 202” 16FSJIC ST/45 G6K	1	15’ RACK
9		294604001	HOSE-HYD-1 X 162-16FSJ-ST/45-6000PSI	1	10’ RACK
10		279076001	HOSE-1X203 16 FSJIC ST/45 G6K	1	15’ RACK
11		294603001	HOSE-HYD-1 X 165-16FSJ-ST/45- 6000PSI	1	10’ RACK
12		81698001	FITTING-16MJIC BULKHEAD STR.	4	
13		278797001	HOSE-1X38 16FSJIC ST/90 M3K	1	
14		294554001	HOSE-HYD-1-49-16FSJ - ST/45 - 3000PSI	1	
15		278796001	HOSE-1X37 16FSJIC ST/90 250PSI	1	
16		287641001	HOSE - 1 X 36 16FS JIC ST/90 250 PSI	1	
17		279048001	HOSE-1X134 16FSJIC ST/ST M3K	1	15’ RACK
18		294596001	HOSE-HYD-1 X 84-16FSJ-ST/ST - 3000PSI	1	10’ RACK
19		279039001	HOSE-1X74 16FSJIC ST/ST M3K	1	
20		279040001	HOSE-1X77 16FSJIC ST/45 M3K	1	
21		279054001	HOSE-1X126 16FSJIC ST/ST M3K	1	15’ RACK
22		294595001	HOSE-HYD-1 X 81-16FSJ-ST/ST - 3000PSI	1	10’ RACK
23		278762001	TUBE - CASE DRAIN	1	
24		201485001	FITTING-12M JIC X 12M JIC BIKHD STR	1	
25		59421001	FITTING - 12F JICX8M JIC ST REDUCER	1	
26		96693001	FITTING-6MJIC BLKHD RUN TEE	2	
27		278866001	FITTING -8 MJIC BULKHEAD RUN TEE	1	
28		61500001	FITTING - 8 JIC F X 6 JIC M STR.	1	
29		79475001	FITTING-6M BULKHEAD JIC ST.	1	
30		65564001	FITTING - 4M JIC BULKHEAD ST.	1	
31		60248001	TEE-4M JICX4M JICX4FS JIC	1	
32		281838001	HOSE - 1/4 X 244 4FS ST/ST 3000 PSI	1	15’ RACK
33		53843555	HOSE-1/4X200 4FS JIC 3000 PSI	1	10’ RACK
34		53843075	HOSE-1/4X50 4FS JIC (100R1)	1	15’ RACK
35		53843681	HOSE-1/4X11 4FSJIC-4FSJIC 90	1	10’ RACK
36		57940179	HOSE-3/8X140 6FS JIC (100R2)	1	
37		57940353	HOSE-3/8X90 6FSJIC 3000 PSI	1	
38		279053001	HOSE - 3/8 X 78 6FS JIC-6FS 90DEG	1	
39		278959001	HOSE - 1/2 X 218 8FSJIC ST/ST M3K	1	15’ RACK
40		53844179	HOSE-1/2X180 8FS JIC 2000 PSI	1	10’ RACK
41		279086001	HOSE -3/8X84 6FS/90 JIC 3000PSI	2	15’ RACK
42		294597001	HOSE-HYD-.38X93-6FSJ - ST/90 - 3000PSI	2	10’ RACK
43		57940419	HOSE-3/8X41 6FS JIC 3500 PSI	2	
44		279140001	HOSE - 1/2” X 247” 8FSJIC ST/ST M3K	1	15’ RACK
45		294605001	HOSE-HYD-.50X206-8FSJ-ST/ST-3000PSI	1	10’ RACK
46		57940721	HOSE-3/8X63 6FSJICST 3000 PSI	1	
47		57940619	HOSE-3/8X49 6FS JIC ST/90	1	
48		53844317	HOSE-1/2X52 8FS JIC 3000 PSI	1	
49		242729001	HOSE-3/8X45 6FSJIC X6FSJIC 90	1	
50		53843559	HOSE-1/4X32 4FS JIC 3000 PSI	1	

https://truckmanualshub.com/

Hose Carrier Mount/Bulkhead Assembly Fig 4-34r01

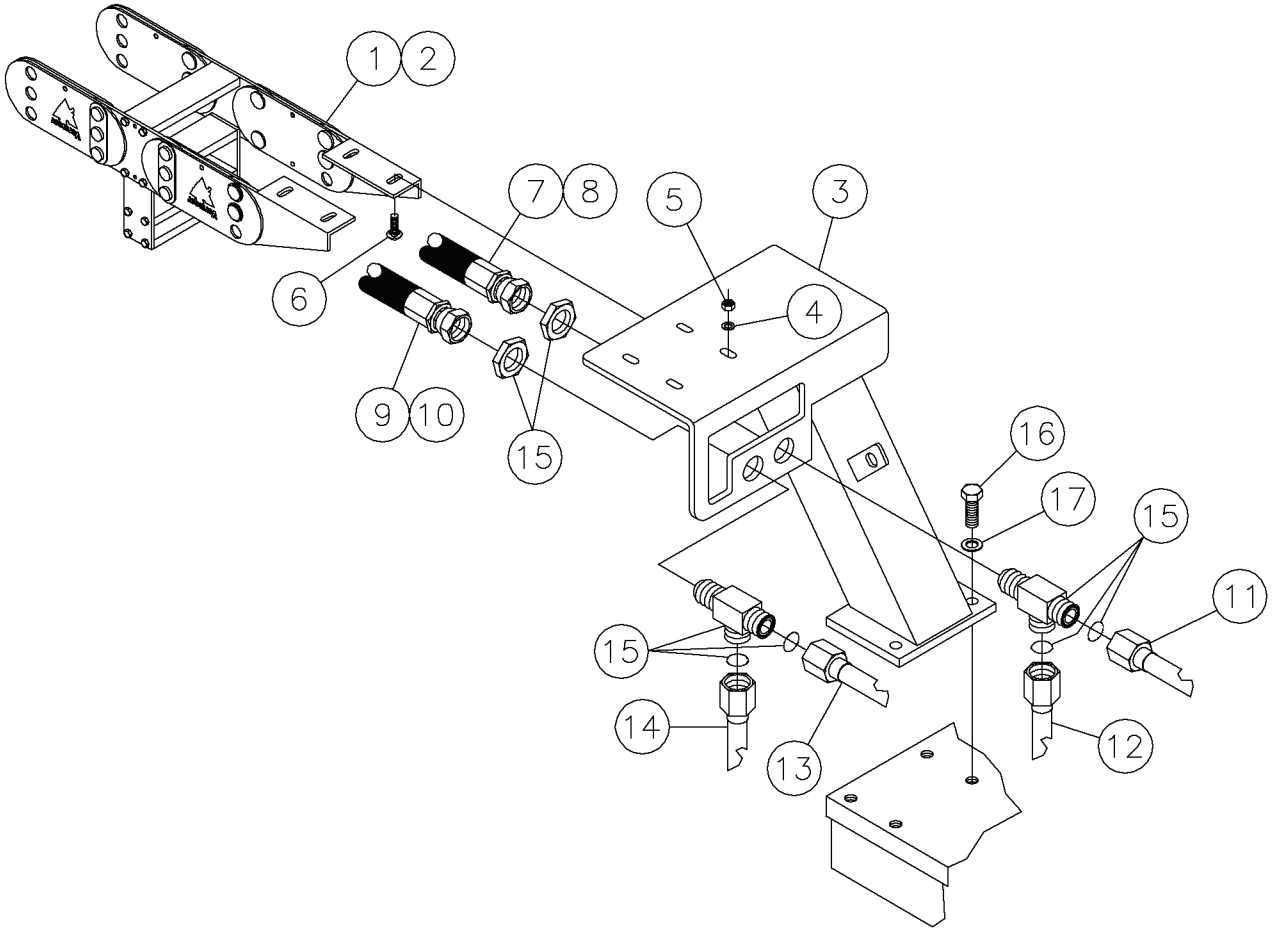

https://truckmanualshub.com/

Hose Carrier Mount/Bulkhead Assembly Fig 4-34r01

REF. NO.	*	PART NO.	DESCRIPTION	QTY.	REMARKS
		Revision Date	July, 2004		Update In Parts List.
1		276280001	TRACK - HOSE CARRIER 15’	1	(BREAKDOWN FIG. 14-49)
2		294636001	TRACK - HOSE CARRIER 10’	1	(BREAKDOWN FIG. 14-48)
3		279360001	VALVE - N.O. 2-WAY POPPET	1	
4		235713001	WASHER - FLATSTRL - .38 - .41 X .81 - .06-YA-A325	8	
5		235725001	NUT - HEX - .38 - 16 - GR8 - YZ	8	
6		235723001	SCREW - HCS -.38 - 16 X 1.50 - GR8 - YZ	8	
7		279137001	HOSE - 1” X 202” 16FSJIC ST/45 G6K	1	
8		294604001	HOSE - HYD - 1.00 X 162 - 16FSJ - ST/45 - 6000PSI	1	
9		279076001	HOSE-1X203 16 FSJIC ST/45 G6K	1	
10		294603001	HOSE - HYD - 1.00 X 165 - 16FSJ - ST/45 - 6000PSI	1	
11		278929001	TUBE - FRONT THRUST MOTOR A	1	
12		278928001	TUBE - REAR THRUST MOTOR A	1	
13		278931001	TUBE - FRONT THRUST MOTOR R	1	
14		278930001	TUBE - REAR THRUST MOTOR R	1	
15		278955001	FITTING - 16 MFFORX X 16 MJIC BLKHD RUN TEE	2	
16		230728001	BOLT-5/8-11X1 3/4GR 8 PLATED	4	
17		235715001	WASHER-5/8 SAE HARD ZINC PLTD	4	

https://truckmanualshub.com/

Hose Carrier Mount/Bulkhead Assembly Fig 4-34

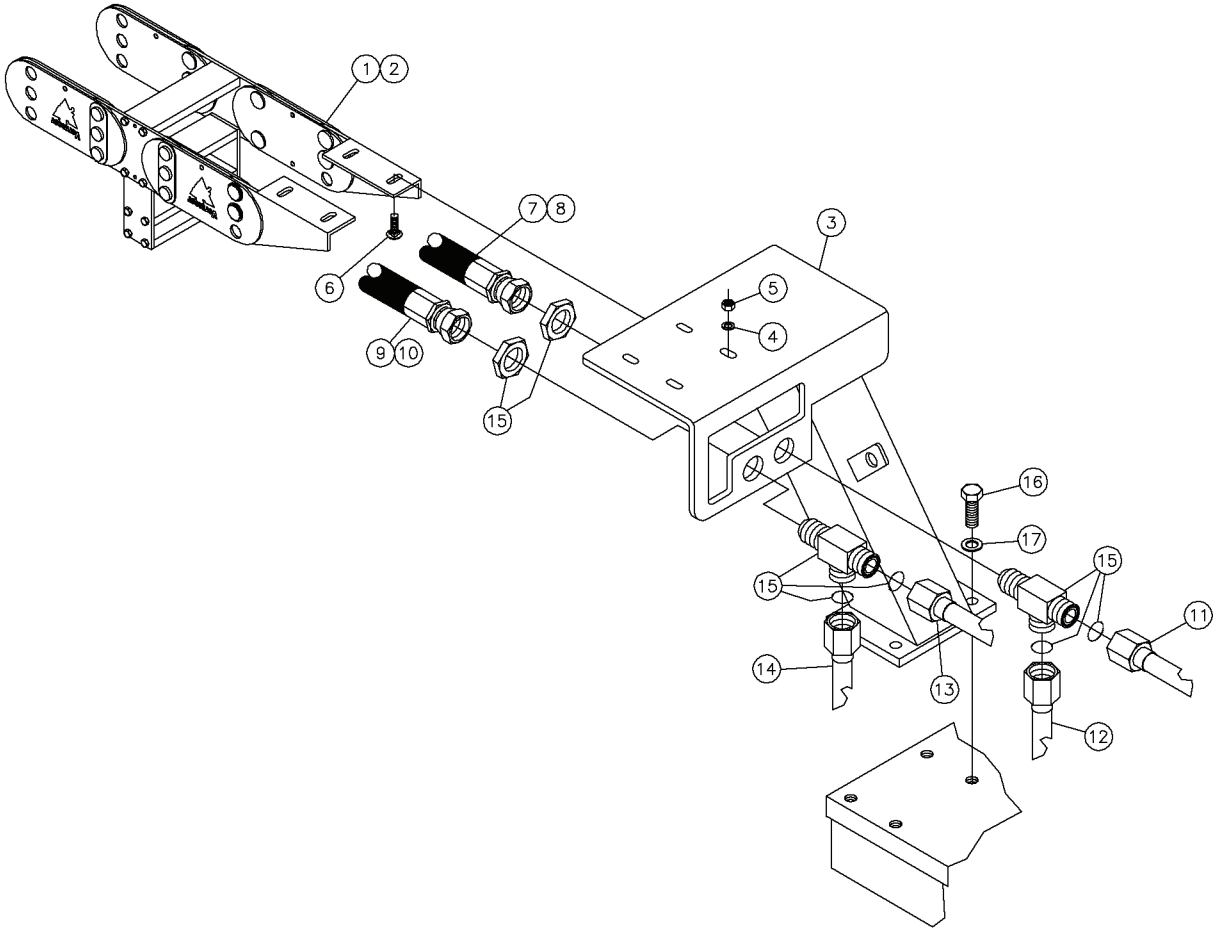

https://truckmanualshub.com/

Hose Carrier Mount/Bulkhead Assembly Fig 4-34

REF. NO.	*	PART NO.	DESCRIPTION	QTY.	REMARKS
1		276280001	TRACK - HOSE CARRIER	1	(BREAKDOWN FIG 14-48)
2		294636001	TRACK - HOSE CARRIER 10’	1	(BREAKDOWN FIG 14-48)
3		276360001	MOUNT - HOSE TRACK	1	
4		235713001	WASHER-3/8 SAE HARD ZINC PLTD	8	
5		235725001	NUT-3/8-16 GR8 ZINC PLTD	8	
6		235723001	BOLT-3/8-16X1 1/2 GR8 ZINC PLT	8	
7		279137001	HOSE - 1” X 202” 16FSJIC ST/45 G6K	1	
8		294604001	HOSE - HYD - 1.00 X 162 - 16FSJ - ST/45 - 6000PSI	1	
9		279076001	HOSE-1X203 16 FSJIC ST/45 G6K	1	
10		294603001	HOSE - HYD - 1.00 X 165 - 16FSJ - ST/45 - 6000PSI	1	
11		278929001	TUBE - FRONT THRUST MOTOR A	1	
12		278928001	TUBE - REAR THRUST MOTOR A	1	
13		278931001	TUBE - FRONT THRUST MOTOR R	1	
14		278930001	TUBE - REAR THRUST MOTOR R	1	
15		278955001	FITTING - 16 MFFORX X 16 MJIC BLKHD RUN TEE	2	
16		230728001	BOLT-5/8-11X1 3/4GR 8 PLATED	4	
17		235715001	WASHER-5/8 SAE HARD ZINC PLTD	4	

https://truckmanualshub.com/

Lock Cylinder/Bulkhead Assembly Fig 4-35r01

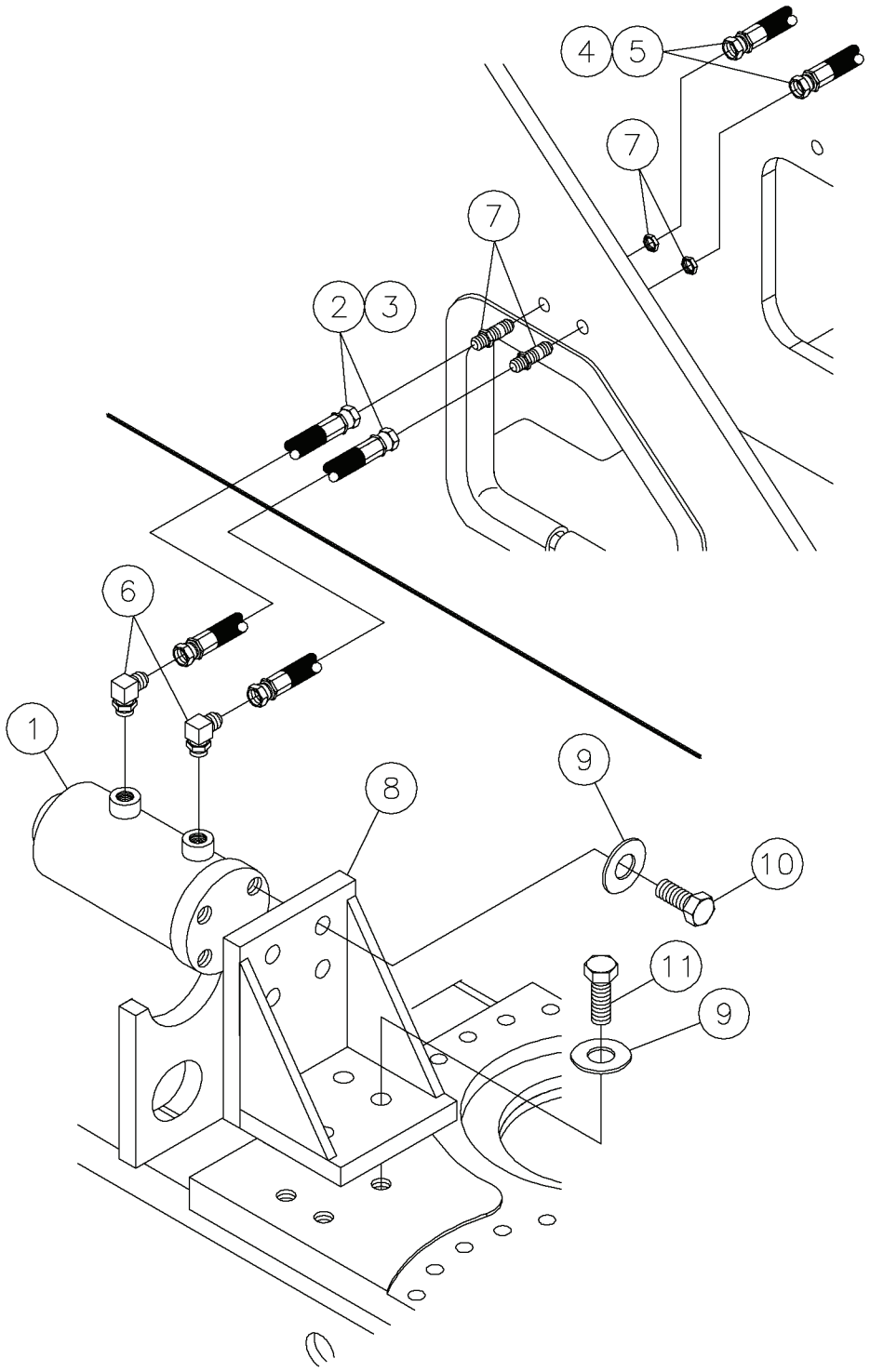

https://truckmanualshub.com/

Lock Cylinder/Bulkhead Assembly Fig 4-35r01

REF. NO.	*	PART NO.	DESCRIPTION	QTY.	REMARKS
		Revision Date	July, 2004		Update In Parts List.
1		278306001	CYLINDER - HYDRAULIC LOCK	1	
2		281838001	HOSE - 1/4 X 244 4FS ST/ST 3000 PSI	2	
3		53843555	HOSE-1/4X200 4FS JIC 3000 PSI	2	
4		281839001	HOSE - 1/4 X 200 4FS JIC ST/90 3000 PSI	2	
5		294606001	HOSE - HYD. - .25 X 188 - 4FSJ - ST/90 - 3000PSI	2	
6		57950001	FITTING-90-4MJ-6MORBA	2	
7		65564001	FITTING - 4M JIC BULKHEAD ST.	2	
8		276430001	MOUNT - LOCK CYLINDER	1	
9		235715001	WASHER-5/8 SAE HARD ZINC PLTD	8	
10		230727001	BOLT-5/8-11X1 1/2GR8 PLATED	4	
11		230728001	BOLT-5/8-11X1 3/4GR 8 PLATED	4	

https://truckmanualshub.com/

Lock Cylinder/Bulkhead Assembly Fig 4-35

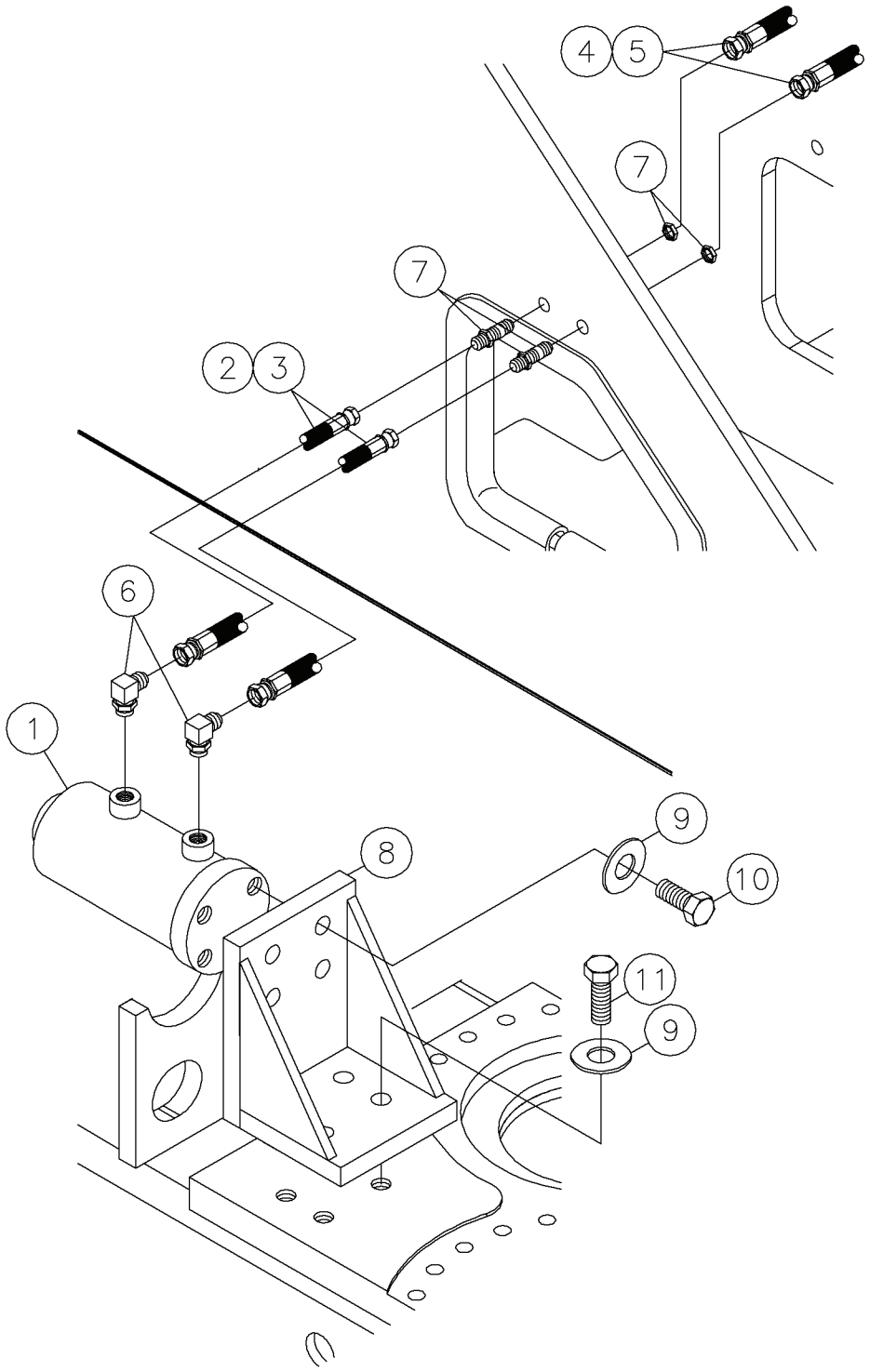

https://truckmanualshub.com/

Lock Cylinder/Bulkhead Assembly Fig 4-35

REF. NO.	*	PART NO.	DESCRIPTION	QTY.	REMARKS
1		278306001	CYLINDER - HYDRAULIC LOCK	1	(BREAKDOWN FIG 14-38)
2		281838001	HOSE - 1/4 X 244 4FS ST/ST 3000 PSI	2	(15’ RACK)
3		53843555	HOSE-1/4X200 4FS JIC 3000 PSI	2	(10’ RACK)
4		281839001	HOSE - 1/4 X 200 4FS JIC ST/90 3000 PSI	2	(15’ RACK)
5		294606001	HOSE - HYD. - .25 X 188 - 4FSJ - ST/90 - 3000PSI	2	(10’ RACK)
6		57950001	FITTING-90-4MJ-6MORBA	2	REPLACES 57968001
7		65564001	FITTING - 4M JIC BULKHEAD ST.	2	
8		276430001	MOUNT - LOCK CYLINDER	1	
9		235715001	WASHER-5/8 SAE HARD ZINC PLTD	8	
10		230727001	BOLT-5/8-11X1 1/2GR8 PLATED	4	
11		203728001	HYD.CRUMBER FOLD 10”EI 48”BOOM	4	

https://truckmanualshub.com/

Miscellaneous Supplies Fig 4-36

CORDURA SLEEVES

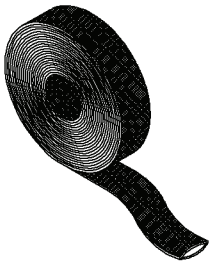

INSIDE DIAMETER	PART NUMBER
.71	83726001
1.22	66094001
1.42	67264001
1.59	69129001
1.81	53840001
2.37	53841001

NOTE: SPECIFY LENGTH WHEN ORDERING

TIE STRAPS

LENGTH	PART NUMBER
4 IN.	78657001
8 IN.	59634001
15 IN.	58151001

O-RINGS

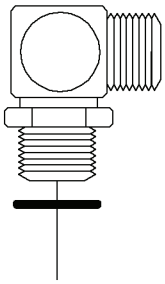

SAE FITTING SIZE	REPLACEMENT O-RING PART NO.
4M	78185027
5M	53649081
6M	59088057
8M	59088053
10M	792029
12M	78518037
14M	64082019
16M	81580001
20M	93316001

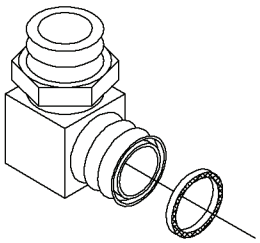

ORS (FLAT FACE) FITTING SIZE	REPLACEMENT O-RING PART NO.
4	93843001
6	93844001
8	93845001
10	93846001
12	93847001
16	93848001
20	93849001
24	93850001

NOTE: O-RINGS LISTED ARE 90 DUROMETER

https://truckmanualshub.com/

Miscellaneous Supplies Fig 4-36

REF. NO.	*	PART NO.	DESCRIPTION	QTY.	REMARKS

Auto Greaser Assembly Fig 4-37r01

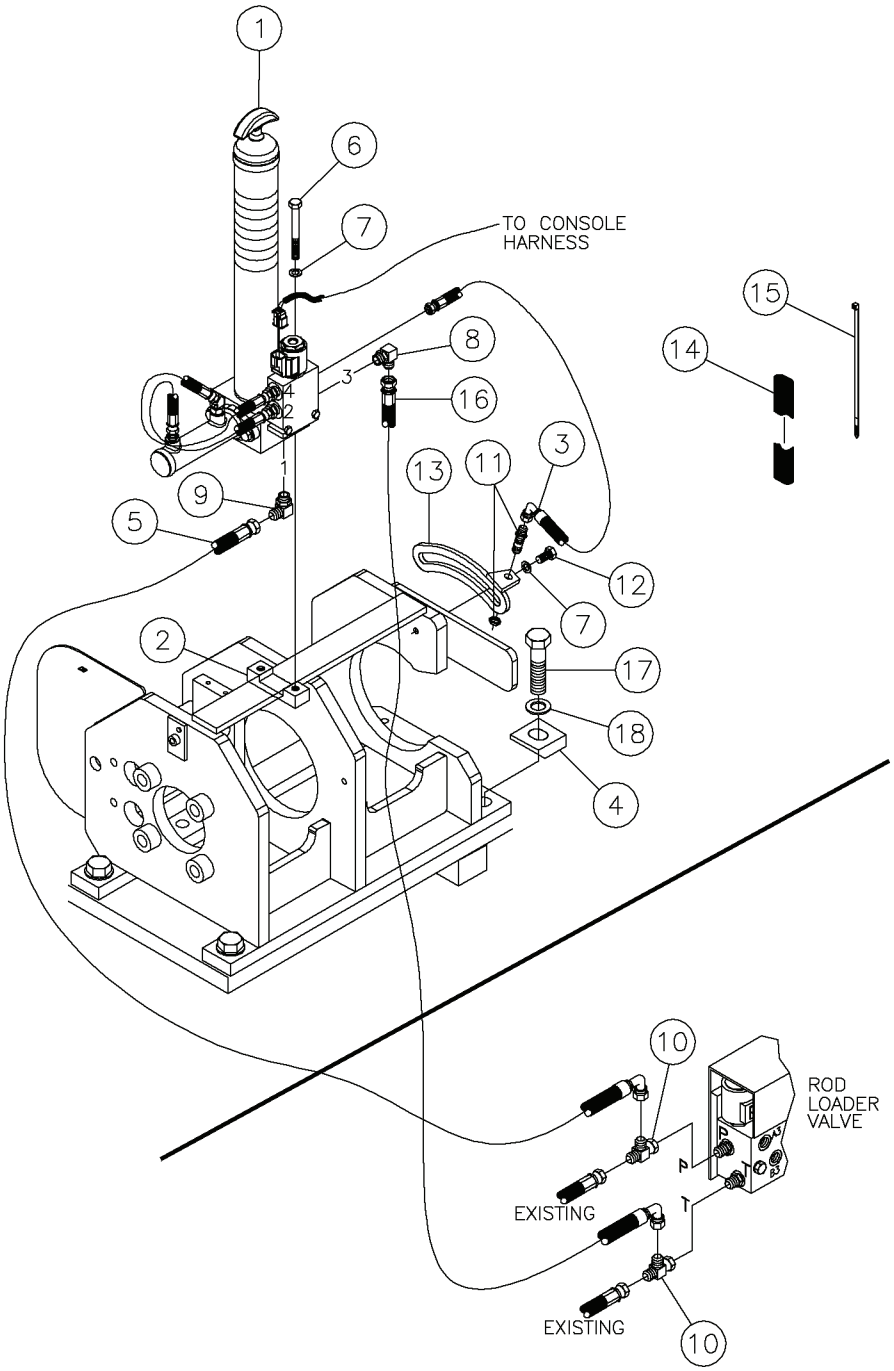

Auto Greaser Assembly Fig 4-37r01

REF. NO.	*	PART NO.	DESCRIPTION	QTY.	REMARKS
		Revision Date	June, 2004		Update In Illustration & Parts List.
1		294900001	GREASE PUMP AY - VAR DISP	1	(BREAKDOWN FIG. 14-30)
2		294908001	BAR - BLOCK MOUNT	1	
3		53843681	HOSE-1/4X11 4FSJIC-4FSJIC 90	1	
4		700IB913	DECAL - CONTROLS	1	
5		57940515	HOSE-3/8X43 6 FS JIC 3000 PSI	1	
6		240377001	BOLT-3/8-16X3 1/4 GR8 ZINC PLT	2	
7		235713001	WASHER - FLATSTRL - .38 - .41 X .81 - .06-YA-A325	4	
8		59426001	FITTING - 90-6MJ-6MORBA	1	
9		59426001	FITTING - 90-6MJ-6MORBA	1	
10		59427001	TEE-6MJ-6FSJ-6MJ	2	
11		65564001	FITTING - 4M JIC BULKHEAD ST.	1	
12		235723001	SCREW - HCS -.38 - 16 X 1.50 - GR8 - YZ	2	
13		296265785	MOUNT - NOZZLE	1	
14		66094001	CORDURA SLEEVE .090WALL 1.22ID	1	
15		59634001	SINGLE NYTIE - 8”	15	
16		291642001	HOSE - HYD. -.38 X 53 6FS JIC ST/90-3000 PSI	1	
17		238242001	BOLT 3/4”-10 X 3” GR8 HEX Y/Z	2	
18		235717001	WASHER-3/4 FLAT HARDENED YELLOW ZINC	2	
19		296265771	BLOCK - STOP	2	

https://truckmanualshub.com/

Auto Greaser Assembly Fig 4-37

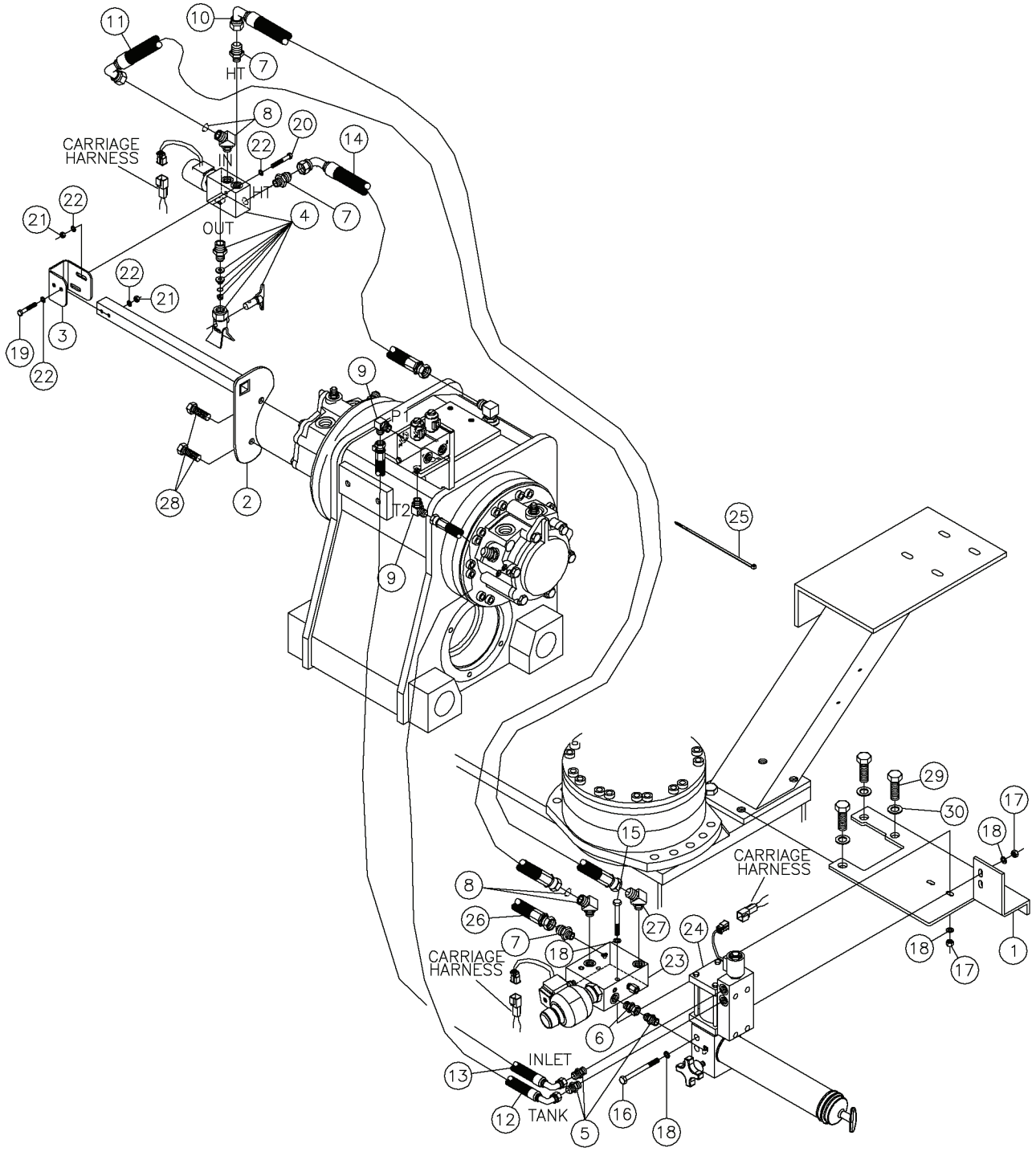

Auto Greaser Assembly Fig 4-37

REF. NO.	*	PART NO.	DESCRIPTION	QTY.	REMARKS
1		291500001	PLATE - GREASE MOUNTING	1	
2		275923001	MOUNT - NOZZLE FIXTURE	1	
3		291555001	MOUNT - SPRAY BLOCK	1	
4		296263793	MEASURING VALVE	1	(BREAKDOWN FIG14-32)
5		65565001	FITTING - 6M O-RING X 6M JIC ST.	3	
6		93411001	ADAPTER - 6M O-RINGX6FS JIC STR	1	
7		86235001	FITTING-6M ORING X 8M JIC STR.	3	
8		288616001	FITTING - 6 MB 8 MO 45	2	
9		59426001	FITTING - 6M JIC X 6M O-RING ADJ 90 ELBOW	2	
10		291647001	HOSE-HYD.-.50X76 8FS JIC ST/90 - 3000PSI	1	
11		291640001	HOSE-HYD.-.5 X 75-8FS ORFF-ST/90-6000PSI	1	
12		57940619	HOSE-3/8X49 6FS JIC ST/90	1	
13		291642001	HOSE - HYD. -.38 X 53 6FS JIC ST/90-3000 PSI	1	
14		291641001	HOSE-HYD.-5 X 25-8FS JIC-ST/90-3000 PSI	1	
15		250502001	BOLT 5/16-18 X 2 3/4”GR8 HEX Y	2	
16		248013001	BOLT-5/16-18X3 1/2 GD8 ZINC PL	2	
17		235741001	NUT-5/16-18 GR8 ZINC PLTD	4	
18		235714001	WASHER-5/16 SAE HARD ZINC PLTD	8	
19		238210001	BOLT - 1/4-20X1 1/2 GR8 HEX ZYC	2	
20		248107001	BOLT-1/4-20X1 3/4 GR 8 ZINC PL	2	
21		235732001	NUT-1/4-20 GR8 ZINC PLTD	4	
22		235716001	WASHER-1/4 SAE HARD ZINC PLTD	8	
23		296263800	MEASURING VALVE	1	(BREAKDOWN FIG 14-31)
24		296263765	PUMP ASSEMBLY	1	(BREAKDOWN FIG 14-30)
25		59634001	NYTIE - 8”	10	
26		279140001	HOSE - 1/2” X 247” 8FSJIC ST/ST M3K	1	
27		102667001	FITTING-6MX8M JIC 45DEG. ELBOW	1	
28		142402001	HHCS-M12X1.75X35 DIN931 GR10.9	2	
29		230728001	BOLT-5/8-11X1 3/4GR 8 PLATED	3	
30		235715001	WASHER-5/8 SAE HARD ZINC PLTD	3	

https://truckmanualshub.com/

Control Console/Console Mount Assembly (S/N 491-504) Fig 5-1r01

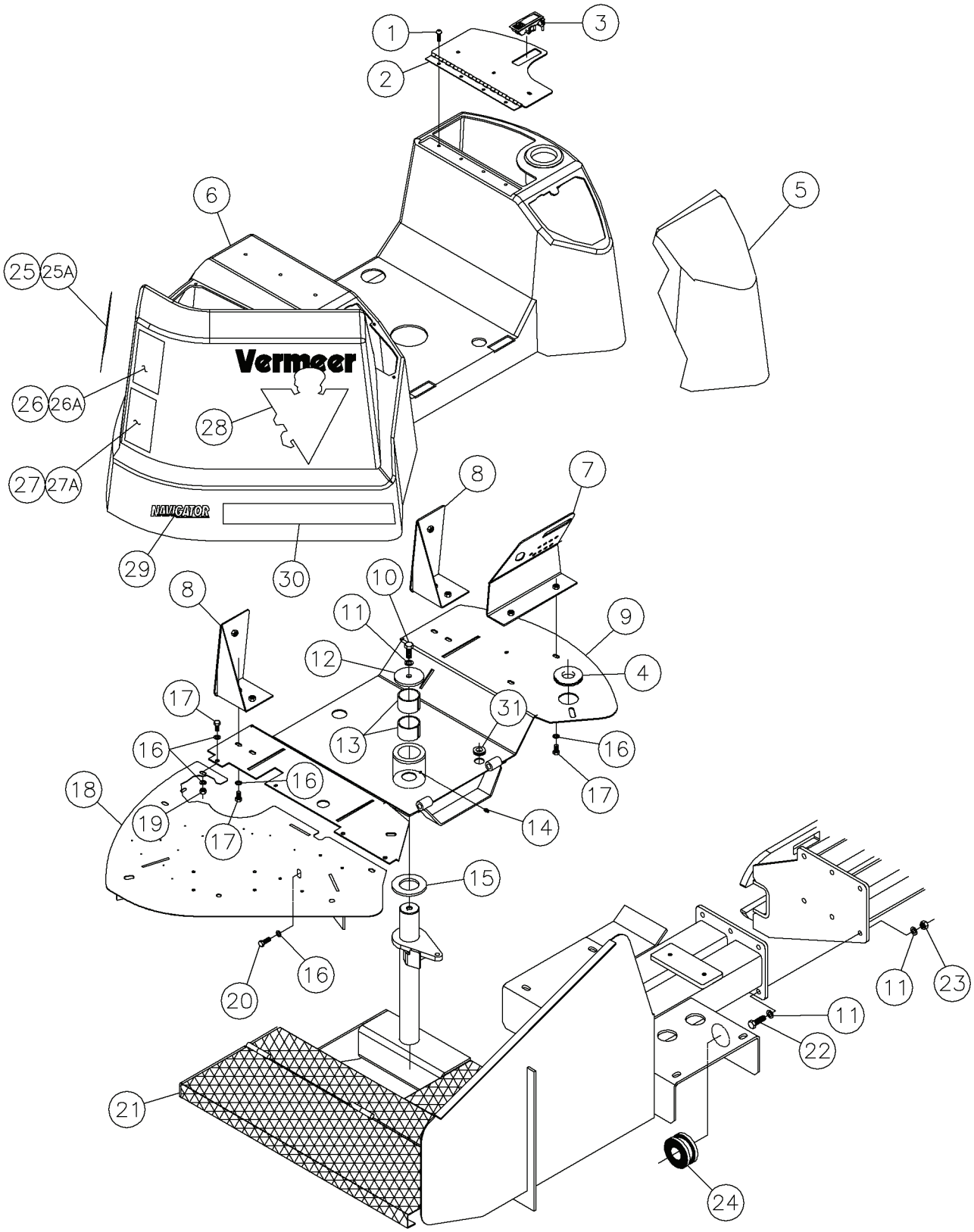

https://truckmanualshub.com/

Control Console/Console Mount Assembly (S/N 491-504) Fig 5-1r01

REF. NO.	*	PART NO.	DESCRIPTION	QTY.	REMARKS
		Revision Date	June, 2004		Update In Illustration & Parts List.
1		240419001	BOLT-1/4-20X3/4 BUTTON HEAD	4	
2		277657001	TOOL BOX LID WELDMENT	1	
3		218080001	LATCH-ADJ.LEVER W/RAISED BUTTN(INC KEYS)	1	
4		902401001	GROMMET-1 45/64”RUBBER	1	
5		281843001	COVER - FIBERGLASS OPERATOR CONSOLE	1	
6		277599001	OPERATOR CONTROL	1	
7		277645001	BAFFLE WELDMENT	1	
8		277642001	MOUNT - UMBRELLA	2	
9		277639003	BASE ASSEMBLY-CONSOLE	1	(INC REF 13 & 14)
10		235729001	SCREW-HCS-.50-13X1.00-GR8-YZ	1	
11		485025	WASHER-1/2 FLAT-HARDENED-YZ	13	
12		53276001	WASHER-JACKSHAFT END REF T10767	1	
13		85790003	BUSHING-SPRING 2 1/4X2 X 1 1/2	2	
14		598001	FITTING-1/4” NF ST GREASE ZERK	1	
15		215200001	WASHER-THRUST	1	
16		235713001	WASHER - FLATSTRL - .38 - .41 X .81 - .06-YA-A325	16	
17		235726001	BOLT-3/8-16X3/4 GR8 HEX ZNCPLT	14	
18		285565001	MOUNT - CONSOLE	1	
19		235725001	NUT - HEX - .38 - 16 - GR8 - YZ	4	
20		235727001	BOLT-3/8-16X1 GR8 HEX ZINC PLT	1	
21		294650001	PLATFORM OPERATOR	1	
22		235721001	BOLT-1/2-13X1 1/2 GR8 ZINC PLT	6	
23		235731001	NUT-1/2-13 GR8 ZINC PLTD	6	
24		1865001	GROMMET - 1/4 X 2 1/2 (YELLOW) REF T08692	1	
25		7000A627	DECAL-DANGER	1	DOM.
25A		700IA627	DECAL-DANGER	1	INTL.
26		7000A393	DECAL - DANGER	1	DOM.
26A		700IA393	DECAL - DANGER	1	INTL.
27		7000A394	DECAL - WARNING	1	DOM.
27A		700IA394	DECAL - WARNING	1	INTL.
28		70000787	DECAL 12”VERMEER LOGO	1	
29		70000615	DECAL-MODEL NAVIGATOR (SMALL)	1	
30		70000774	DECAL 2 1/2”VERMEER STRIPE	21”	(SPECIFY LENGTH)
31		900869001	GROMMET 2567	1	

https://truckmanualshub.com/

Control Console/Console Mount Assembly (S/N 491-504) Fig 5-1

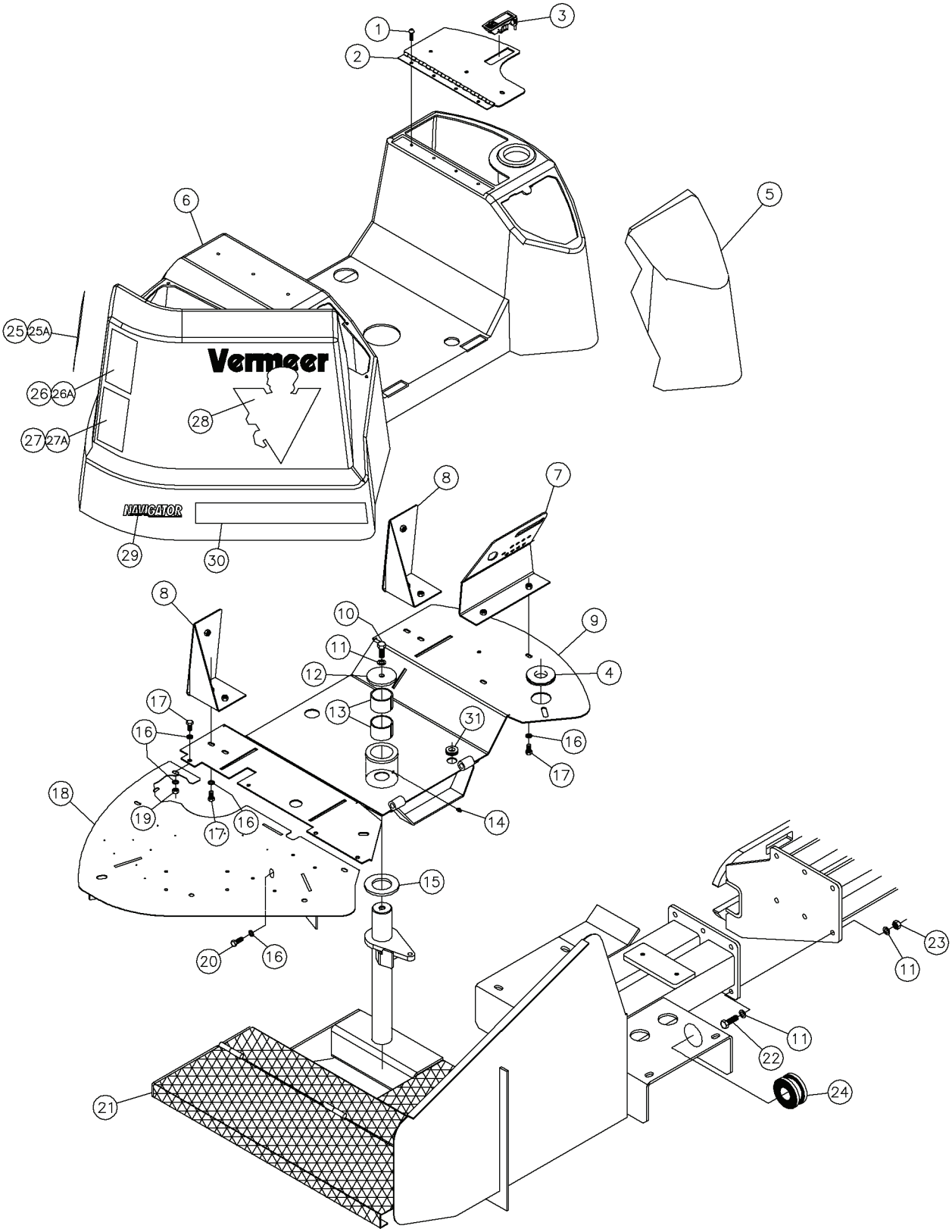

https://truckmanualshub.com/

Control Console/Console Mount Assembly (S/N 491-504) Fig 5-1

REF. NO.	*	PART NO.	DESCRIPTION	QTY.	REMARKS
1		240419001	BOLT-1/4-20X3/4 BUTTON HEAD	4	
2		277657001	TOOL BOX LID WELDMENT	1	
3		218080001	LATCH-ADJ.LEVER W/RAISED BUTTN	1	
4		902401001	GROMMET-1 45/64”RUBBER	1	
5		281843001	COVER - FIBERGLASS OPERATOR CONSOLE	1	
6		277599001	OPERATOR CONTROL	1	
7		277645001	BAFFLE WELDMENT	1	
8		277642001	MOUNT - UMBRELLA	2	
9		277639003	BASE ASSEMBLY-CONSOLE	1	(INC REF 13 & 14)
10		235729001	SCREW-HCS-.50-13X1.00-GR8-YZ	1	
11		485025	WASHER-1/2 FLAT-HARDENED-ZINC	13	
12		53276001	WASHER-JACKSHAFT END	1	
13		85790003	BUSHING-SPRING 2 1/4X2 X 1 1/2	2	
14		598001	ZERK-1/4” NF ST GREASE	1	
15		215200001	WASHER-THRUST	1	
16		235713001	WASHER-3/8 SAE HARD ZINC PLTD	16	
17		235726001	BOLT-3/8-16X3/4 GR8 HEX ZNCPLT	14	
18		28565001	PLATE-HITCH (LOWER)	1	
19		235725001	NUT-3/8-16 GR8 ZINC PLTD	4	
20		235727001	BOLT-3/8-16X1 GR8 HEX ZINC PLT	1	
21		294650001	PLATFORM OPERATOR	1	
22		235721001	BOLT-1/2-13X1 1/2 GR8 ZINC PLT	6	
23		235731001	NUT-1/2-13 GR8 ZINC PLTD	6	
24		1865001	GROMMET - 1/4 X 2 1/2 (YELLOW)	1	
25		7000A627	DECAL-DANGER	1	DOM.
25A		700IA627	DECAL-DANGER	1	INTL.
26		7000A393	DECAL - DANGER	1	DOM.
26A		700IA393	DECAL - DANGER	1	INTL.
27		7000A394	DECAL - WARNING	1	DOM.
27A		700IA394	DECAL - WARNING	1	INTL.
28		70000787	DECAL 12”VERMEER LOGO	1	
29		70000615	DECAL-MODEL NAVIGATOR (SMALL)	1	
30		70000774	DECAL 2 1/2”VERMEER STRIPE	21”	(SPECIFY LENGTH)
31		900869001	GROMMET 2567	1	

https://truckmanualshub.com/

Control Console/Console Mount Assembly (S/N 505-) Fig 5-1Ar01

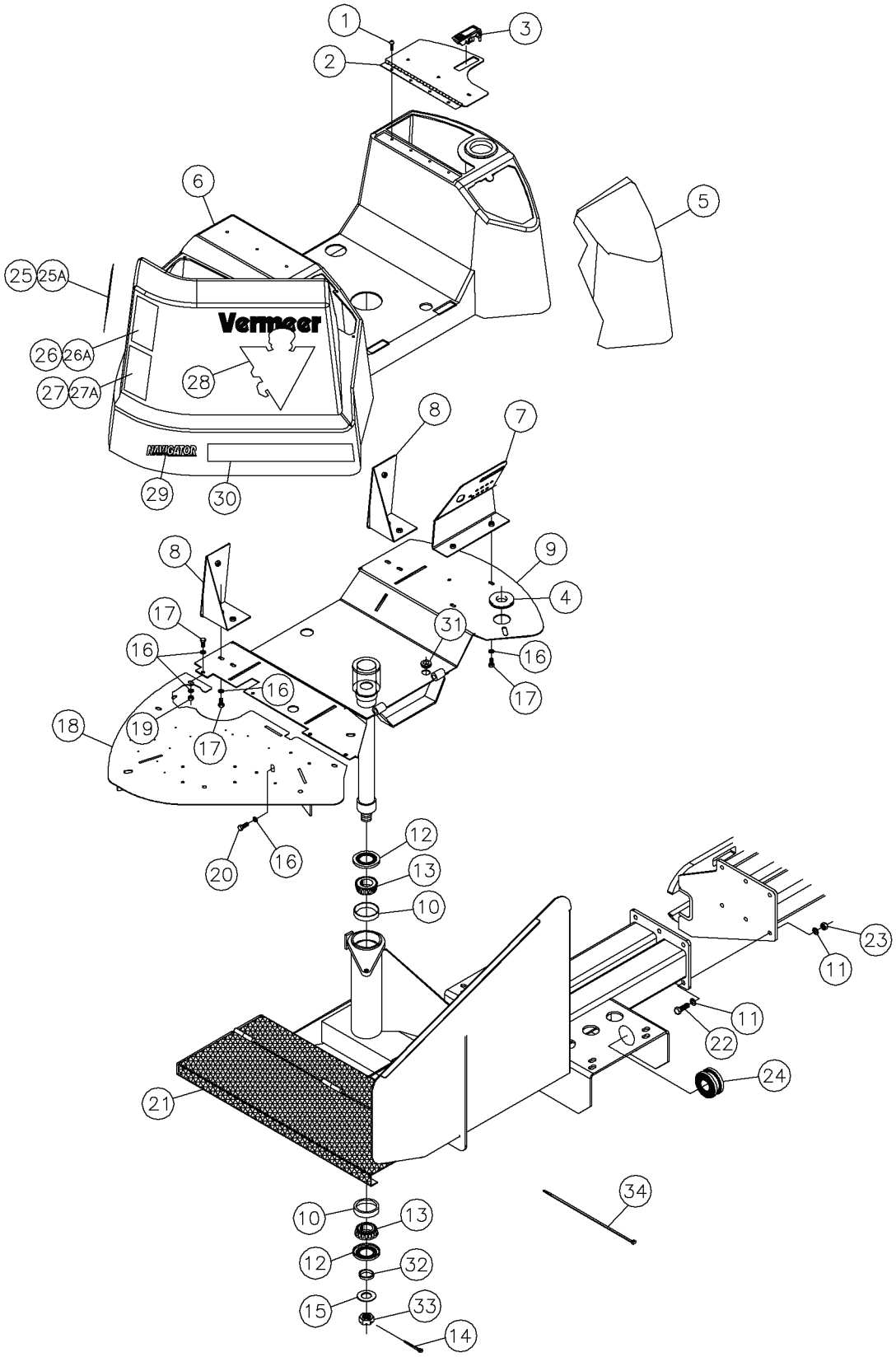

https://truckmanualshub.com/

Control Console/Console Mount Assembly (S/N 505-) Fig 5-1Ar01

REF. NO.	*	PART NO.	DESCRIPTION	QTY.	REMARKS
		Revision Date	June, 2004		Update In Illustration & Parts List.
1		240419001	BOLT-1/4-20X3/4 BUTTON HEAD	4	
2		277657001	TOOL BOX LID WELDMENT	1	
3		218080001	LATCH-ADJ.LEVER W/RAISED BUTTN(INC KEYS)	1	
4		902401001	GROMMET-1 45/64”RUBBER	1	
5		281843001	COVER - FIBERGLASS OPERATOR CONSOLE	1	
6		277599001	OPERATOR CONTROL	1	
7		277645001	BAFFLE WELDMENT	1	
8		277642001	MOUNT - UMBRELLA	2	
9		294654001	BASE - CONSOLE	1	
10		502247001	BEARING CUP 2”-LM104911	1	
11		485025	WASHER-1/2 FLAT-HARDENED-YZ	13	
12		502246001	SEAL-2.50 ID X 3.251 OD	1	
13		502248001	BEARING CONE 2”-LM104949	2	
14		510043	COTTER PIN-1/8” X 2” REF T15290	1	
15		238891001	WASHER-1 1/4 HARDENED FLAT ZY	1	
16		235713001	WASHER - FLATSTRL - .38 - .41 X .81 - .06-YA-A325	16	
17		235726001	BOLT-3/8-16X3/4 GR8 HEX ZNCPLT	14	
18		285565001	MOUNT - CONSOLE	1	
19		235725001	NUT - HEX - .38 - 16 - GR8 - YZ	4	
20		235727001	BOLT-3/8-16X1 GR8 HEX ZINC PLT	1	
21		294650001	PLATFORM OPERATOR	1	
22		235721001	BOLT-1/2-13X1 1/2 GR8 ZINC PLT	6	
23		235731001	NUT-1/2-13 GR8 ZINC PLTD	6	
24		1865001	GROMMET - 1/4 X 2 1/2 (YELLOW) REF T08692	1	
25		7000A627	DECAL-DANGER	1	DOM.
25A		700IA627	DECAL-DANGER	1	INTL.
26		7000A393	DECAL - DANGER	1	DOM.
26A		700IA393	DECAL - DANGER	1	INTL.
27		7000A394	DECAL - WARNING	1	DOM.
27A		700IA394	DECAL - WARNING	1	INTL.
28		70000787	DECAL 12”VERMEER LOGO	1	
29		70000615	DECAL-MODEL NAVIGATOR (SMALL)	1	
30		70000774	DECAL 2 1/2”VERMEER STRIPE	21”	(SPECIFY LENGTH)
31		900869001	GROMMET 2567	1	
32		502225001	SPACER-BEARING	1	
33		59492001	NUT-1 1/4-12 SLOTTED HEX JAM	1	
34		59634001	SINGLE NYTIE - 8”	A/R	

https://truckmanualshub.com/

Control Console/Console Mount Assembly (S/N 505-) Fig 5-1A

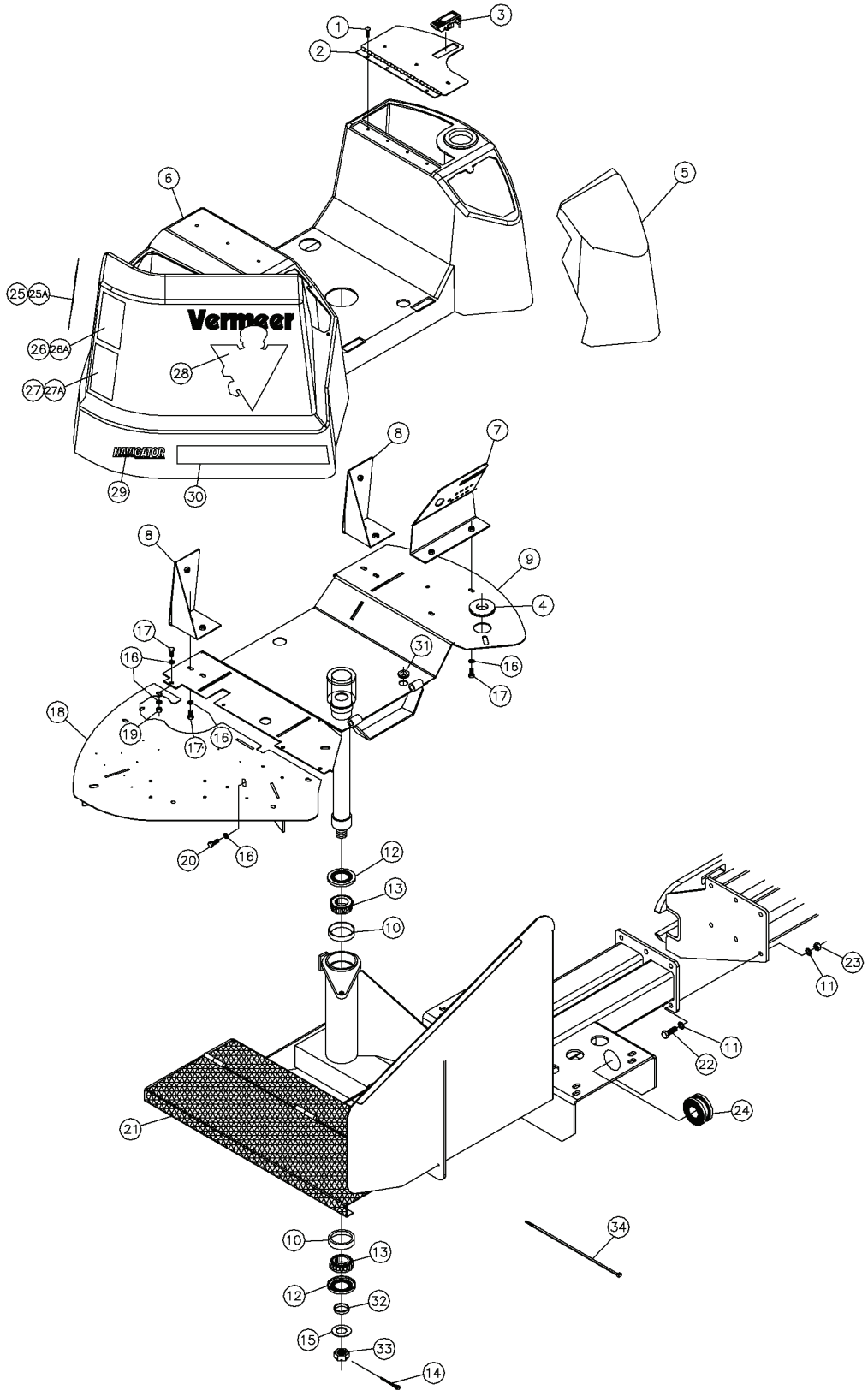

https://truckmanualshub.com/

Control Console/Console Mount Assembly (S/N 505-) Fig 5-1A

REF. NO.	*	PART NO.	DESCRIPTION	QTY.	REMARKS
1		240419001	BOLT-1/4-20X3/4 BUTTON HEAD	4	
2		277657001	TOOL BOX LID WELDMENT	1	
3		218080001	LATCH-ADJ.LEVER W/RAISED BUTTN	1	
4		902401001	GROMMET-1 45/64”RUBBER	1	
5		281843001	COVER - FIBERGLASS OPERATOR CONSOLE	1	
6		277599001	OPERATOR CONTROL	1	
7		277645001	BAFFLE WELDMENT	1	
8		277642001	MOUNT - UMBRELLA	2	
9		294654001	BASE - CONSOLE	1	
10		502247001	BEARING CUP 2”-LM104911	2	
11		485025	WASHER-1/2 FLAT-HARDENED-ZINC	13	
12		502246001	SEAL-2.50 ID X 3.251 OD	2	
13		502248001	BEARING CONE 2”-LM104949	2	
14		510043	COTTER PIN-1/8” X 2”	1	
15		238891001	WASHER-1 1/4 HARDENED FLAT ZY	1	
16		235713001	WASHER-3/8 SAE HARD ZINC PLTD	16	
17		235726001	BOLT-3/8-16X3/4 GR8 HEX ZNCPLT	14	
18		28565001	PLATE-HITCH (LOWER)	1	
19		235725001	NUT-3/8-16 GR8 ZINC PLTD	4	
20		235727001	BOLT-3/8-16X1 GR8 HEX ZINC PLT	1	
21		294650001	PLATFORM OPERATOR	1	
22		235721001	BOLT-1/2-13X1 1/2 GR8 ZINC PLT	6	
23		235731001	NUT-1/2-13 GR8 ZINC PLTD	6	
24		1865001	GROMMET - 1/4 X 2 1/2 (YELLOW)	1	
25		7000A627	DECAL-DANGER	1	DOM.
25A		700IA627	DECAL-DANGER	1	INTL.
26		7000A393	DECAL - DANGER	1	DOM.
26A		700IA393	DECAL - DANGER	1	INTL.
27		7000A394	DECAL - WARNING	1	DOM.
27A		700IA394	DECAL - WARNING	1	INTL.
28		70000787	DECAL 12”VERMEER LOGO	1	
29		70000615	DECAL-MODEL NAVIGATOR (SMALL)	1	
30		70000774	DECAL 2 1/2”VERMEER STRIPE	21”	(SPECIFY LENGTH)
31		900869001	GROMMET 2567	1	
32		502225001	SPACER-BEARING	1	
33		59492001	NUT-1 1/4-12 SLOTTED HEX JAM	1	
34		59634001	NYTIE - 8”	A/R	

https://truckmanualshub.com/

Gauge Panel Assembly (15' Rack) Fig 5-2

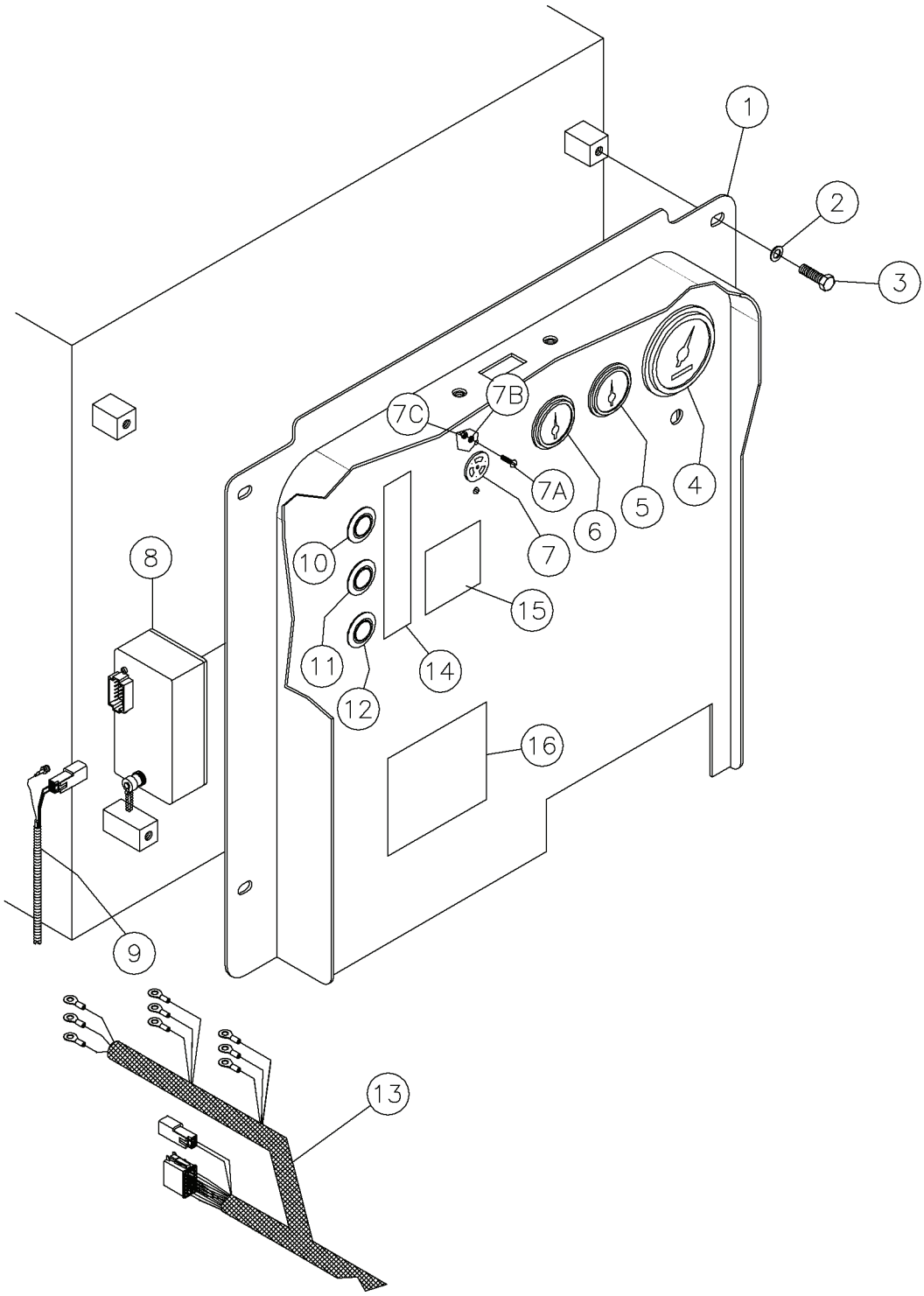

https://truckmanualshub.com/

Gauge Panel Assembly (15' Rack) Fig 5-2

REF. NO.	*	PART NO.	DESCRIPTION	QTY.	REMARKS
1		251247001	CONSOLE- ELECTRICAL	1	
2		235713001	WASHER-3/8 SAE HARD ZINC PLTD	6	
3		235727001	BOLT-3/8-16X1 GR8 HEX ZINC PLT	4	
4		201785001	TACH/HOURMETER DATCON 28A4EM	1	
5		201793001	GAUGE-WATER TEMP DATCON 826EM	1	
6		201786001	GAUGE-FUEL DATCON 810EM	1	
7		904346001	BUZZER	1	
7A		905001001	BOLT-8-32 X 2 STOVE	2	
7B		904995001	WASHER-8 INTERNAL STAR	2	
7C		399001	NUT-8-32 HEX	2	
8		281523001	ZAP ALERT - CURRENT SENSE	1	
9		282517001	ZAP ALERT COIL -23’ COAX 3 WIRE	1	
10		277695001	SWITCH - PUSH BUTTON ZAP ALERT RESET	1	
11		277696001	SWITCH - PUSH BUTTON ZAP ALERT VOLTAGE TEST	1	
12		277697001	SWITCH - PUSH BUTTON ZAP ALERT CURRENT TEST	1	
13		277668001	HARNESS - GAUGE PANEL	1	
14		700IA474	DECAL-STRIKE ALERT (UG)	1	
15		7000B119	DECAL - PATENT	1	
16		7000B295	DECAL - GREASE CHART	1	

https://truckmanualshub.com/

Setup Control Panel Assembly (15' Rack) Fig 5-3

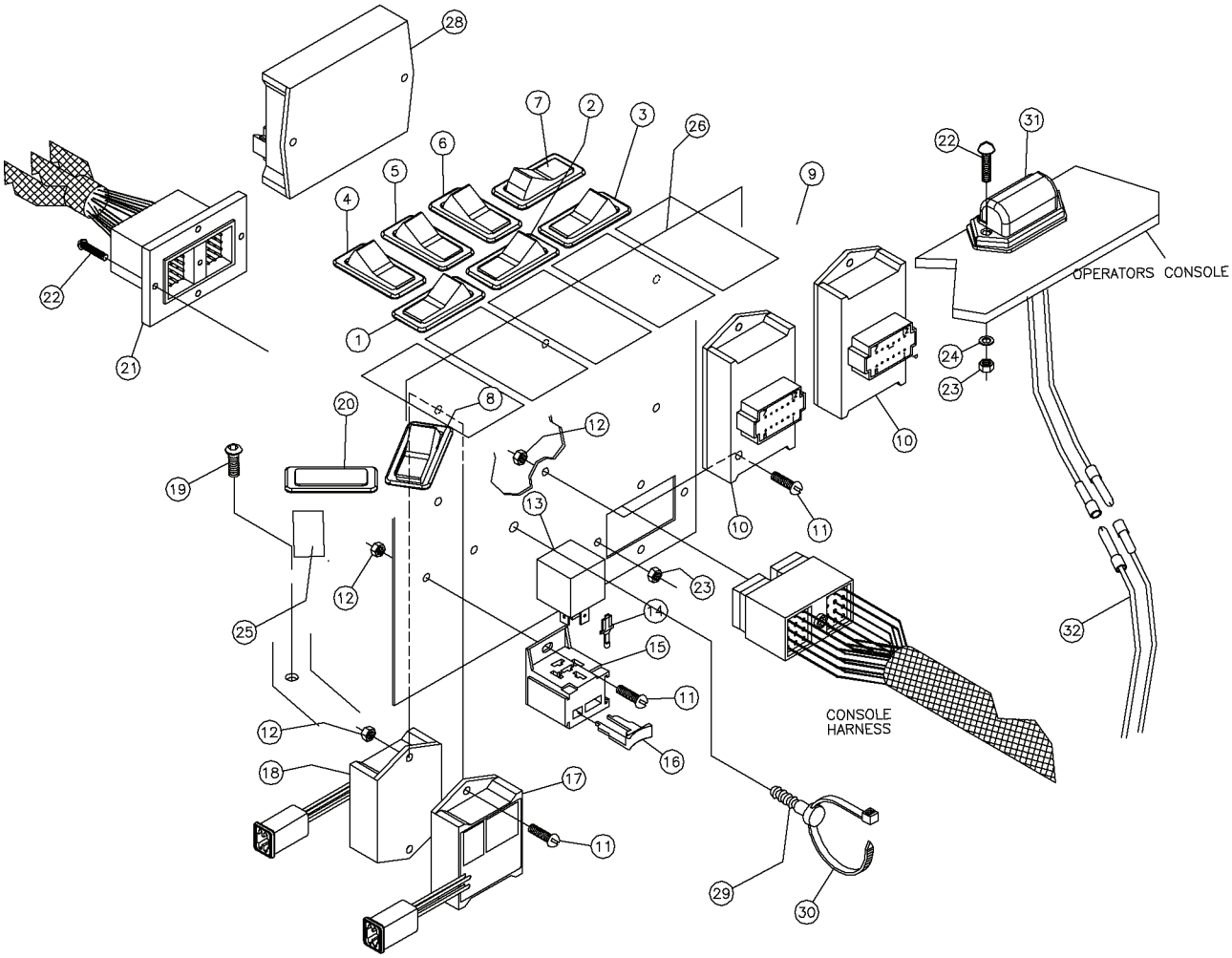

https://truckmanualshub.com/

Setup Control Panel Assembly (15' Rack) Fig 5-3

REF. NO.	*	PART NO.	DESCRIPTION	QTY.	REMARKS
1		277600001	ROCKER SWITCH-STAKEDOWN THRUST	1	
2		277601001	ROCKER SWITCH-STAKEDOWN ROTATE	1	
3		277602001	ROCKER SWITCH-STAKE DOWN SELCT	1	
4		277603001	ROCKER SWITCH-LEFT OUTRIGGER	1	
5		277604001	ROCKER SWITCH-RIGHT OUTRIGGER	1	
6		277647001	SWITCH -RACK ANGLE ROCKER	1	
7		277605001	ROCKER SWITCH-CONSOLE ROTATE	1	
8		289646001	SWITCH-ROCKER ROCKFIRE	1	
9		277658001	PANEL SETUP WELDMENT	1	
10		278857001	MODULE - 10 INPUT EXPANDER	2	
11		1802006	BOLT-10-24 X 3/4 RND HD STOVE	10	
12		400001	NUT-3/16 NC HEX	10	
13		251681001	RELAY - SEALED 40 AMP	2	
14		279315001	TERM. -14/16 GA LOCKING RELAY	10	
15		279313001	MOUNT -RELAY W/LOCKABLE TERMNS	2	
16		279314001	TAB -RELAY TERMNL LOCK	2	
17		251672001	ELECTRONICS MODULE-DSR CONTROL	1	
18		251673001	ELECTRONIC MODULE-5SEC DLY RLY	1	
19		240419001	BOLT-1/4-20X3/4 BUTTON HEAD	4	
20		609566001	PLUG - ROCKER SWITCH FILLER	1	
21		277665001	HARNESS - SETUP PANEL	1	
22		10530006	SCREW-#8-32X3/4 SLOT RD.HD.	6	
23		69759001	LOCK NUT-#8-32 NYLON INSERT PL	6	
24		224769001	WASHER-#8 FLAT	2	
25		7000B170	DECAL - WATERFLOW	1	
26		7000A528	DECAL-WARNING	1	
26A		700IA528	DECAL-WARNING	1	
27		277734001	RIVET - PLASTIC 1/4	4	
28		278952001	MODULE - PWM CONTROL	1	
29		278953001	ANCHOR - CABLE TIE	1	
30		59634001	NYTIE - 8”	1	
31		296256067	LIGHT - CONSOLE, M434	1	
32		296256081	HARNESS - CONSOLE LIGHT	1	

https://truckmanualshub.com/

Setup Control Panel Assembly (10' Rack) Fig 5-4

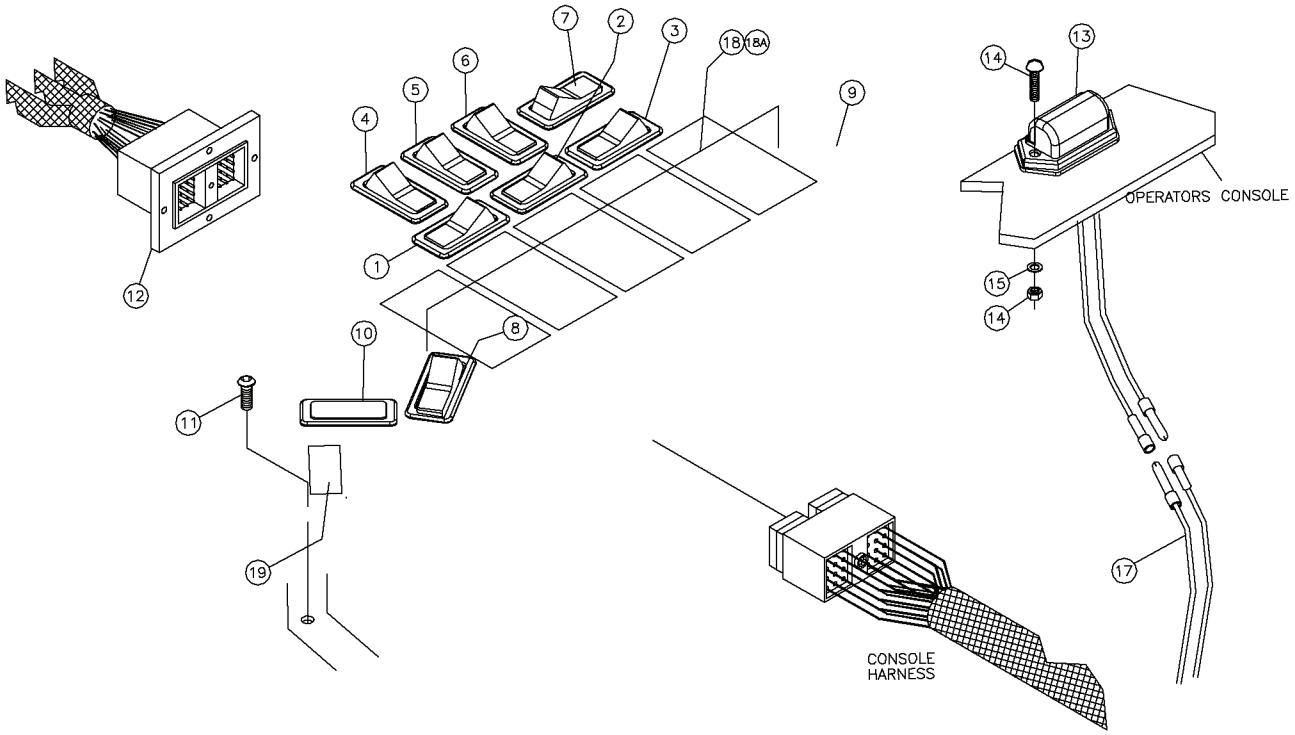

https://truckmanualshub.com/

Setup Control Panel Assembly (10' Rack) Fig 5-4

REF. NO.	*	PART NO.	DESCRIPTION	QTY.	REMARKS
1		277600001	ROCKER SWITCH-STAKEDOWN THRUST	1	
2		277601001	ROCKER SWITCH-STAKEDOWN ROTATE	1	
3		277602001	ROCKER SWITCH-STAKE DOWN SELCT	1	
4		277603001	ROCKER SWITCH-LEFT OUTRIGGER	1	
5		277604001	ROCKER SWITCH-RIGHT OUTRIGGER	1	
6		277647001	SWITCH -RACK ANGLE ROCKER	1	
7		277605001	ROCKER SWITCH-CONSOLE ROTATE	1	
8		289646001	SWITCH-ROCKER ROCKFIRE	1	
9		277621001	PANEL - SETUP	1	
10		609566001	PLUG - ROCKER SWITCH FILLER	10	
11		240419001	BOLT-1/4-20X3/4 BUTTON HEAD	4	
12		287717001	HARNESS - SETUP PANEL	1	
13		296256067	LIGHT - CONSOLE, M434	1	
14		10530006	SCREW-#8-32X3/4 SLOT RD.HD.	6	
15		224769001	WASHER-#8 FLAT	2	
16		69759001	LOCK NUT-#8-32 NYLON INSERT PL	6	
17		296256081	HARNESS - CONSOLE LIGHT	1	
18		7000A528	DECAL-WARNING	1	DOM.
18A		700IA528	DECAL-WARNING	1	INTL.
19		7000B170	DECAL - WATERFLOW	1	

https://truckmanualshub.com/

Starter Control Panel Assembly (15' Rack) Fig 5-5r01

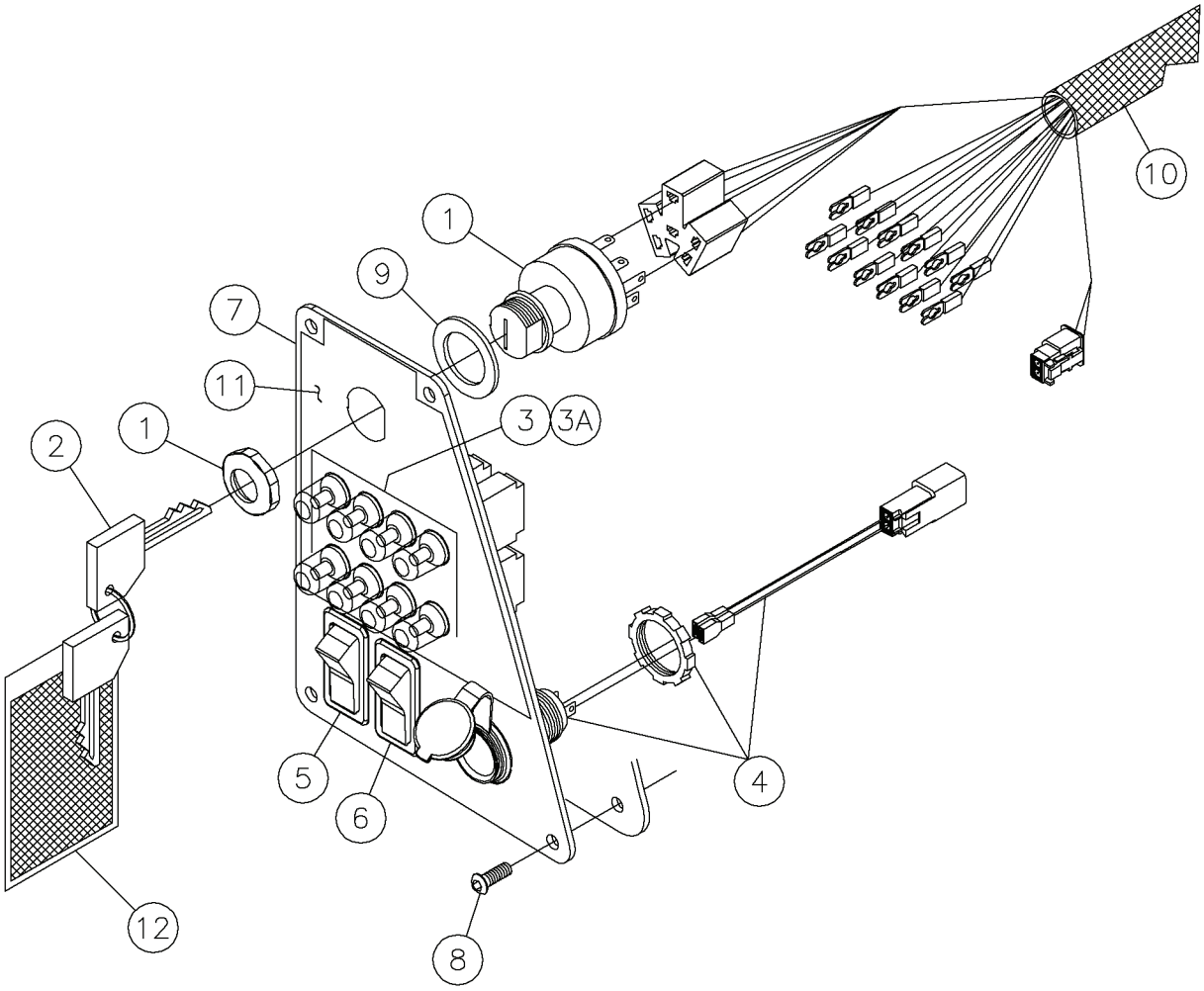

https://truckmanualshub.com/

Starter Control Panel Assembly (15' Rack) Fig 5-5r01

REF. NO.	*	PART NO.	DESCRIPTION	QTY.	REMARKS
		Revision Date	June, 2004		Update In Illustration & Parts List.
1		285597001	SWITCH - IGNITION	1	
2		285597002	KEYS - IGNITION SWITCH (MATCHED PAIR)	1	
3		72081001	BREAKER 2-5700-514 DD 15 AMP	8	
3A		89597001	COVER-BREAKER SWITCH	8	
4		154677001	OUTLET - 12 VOLT	1	
5		277630001	ROCKER SWITCH-WASH WAND	1	
6		277635001	ROCKER SWITCH - LIGHTS	1	
7		285607001	PANEL - STARTER	1	
8		240419001	BOLT-1/4-20X3/4 BUTTON HEAD	4	
9		483005	WASHER-1 1/2X1X14 GA M.B. REF T10919	1	
10		285598001	HARNESS - STARTER PANEL	1	
11		7000B171	DECAL - CONTROL	1	
12		296264000	REMOTE ENGINE/HYDRAULIC LOCKOUT CARD	1	

https://truckmanualshub.com/

Starter Control Panel Assembly (15' Rack) Fig 5-5

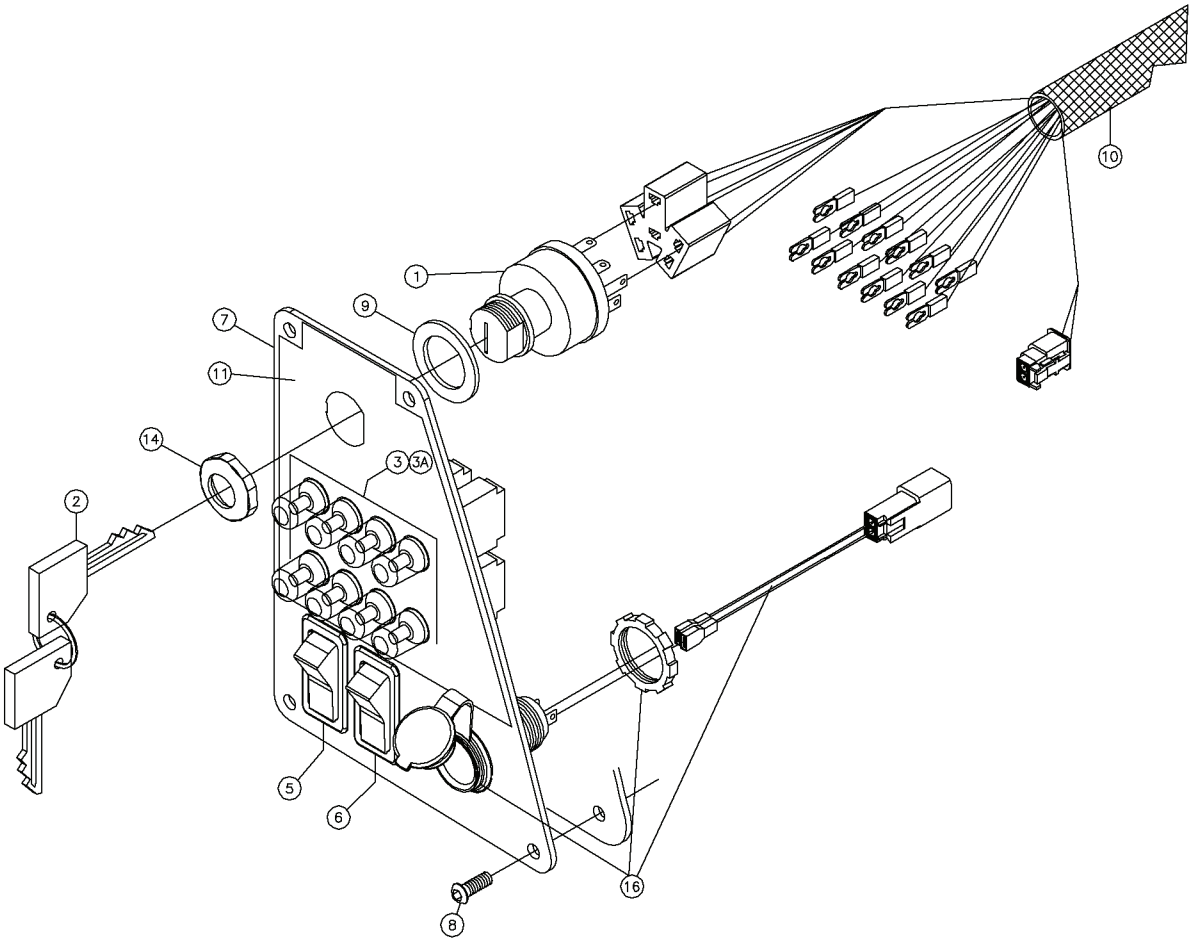

https://truckmanualshub.com/

Starter Control Panel Assembly (15' Rack) Fig 5-5

REF. NO.	*	PART NO.	DESCRIPTION	QTY.	REMARKS
1		285597001	SWITCH - IGNITION	1	
2		285597002	KEYS - IGNITION SWITCH (MATCHED PAIR)	1	
3		72081001	BREAKER 45-700-514-DD 15 AMP	8	
3A		89597001	COVER-BREAKER SWITCH	8	
4		285604001	OUTLET - 12 VOLT	1	
5		277630001	ROCKER SWITCH-WASH WAND	1	
6		277635001	ROCKER SWITCH - LIGHTS	1	
7		285607001	PANEL - STARTER	1	
8		240419001	BOLT-1/4-20X3/4 BUTTON HEAD	4	
9		483005	WASHER-1 1/2X1X14 GA M.B.	1	
10		285598001	HARNESS - STARTER PANEL	1	
11		7000B171	DECAL - CONTROL	1	

https://truckmanualshub.com/

Starter Control Panel Assembly (10' Rack) Fig 5-6r01

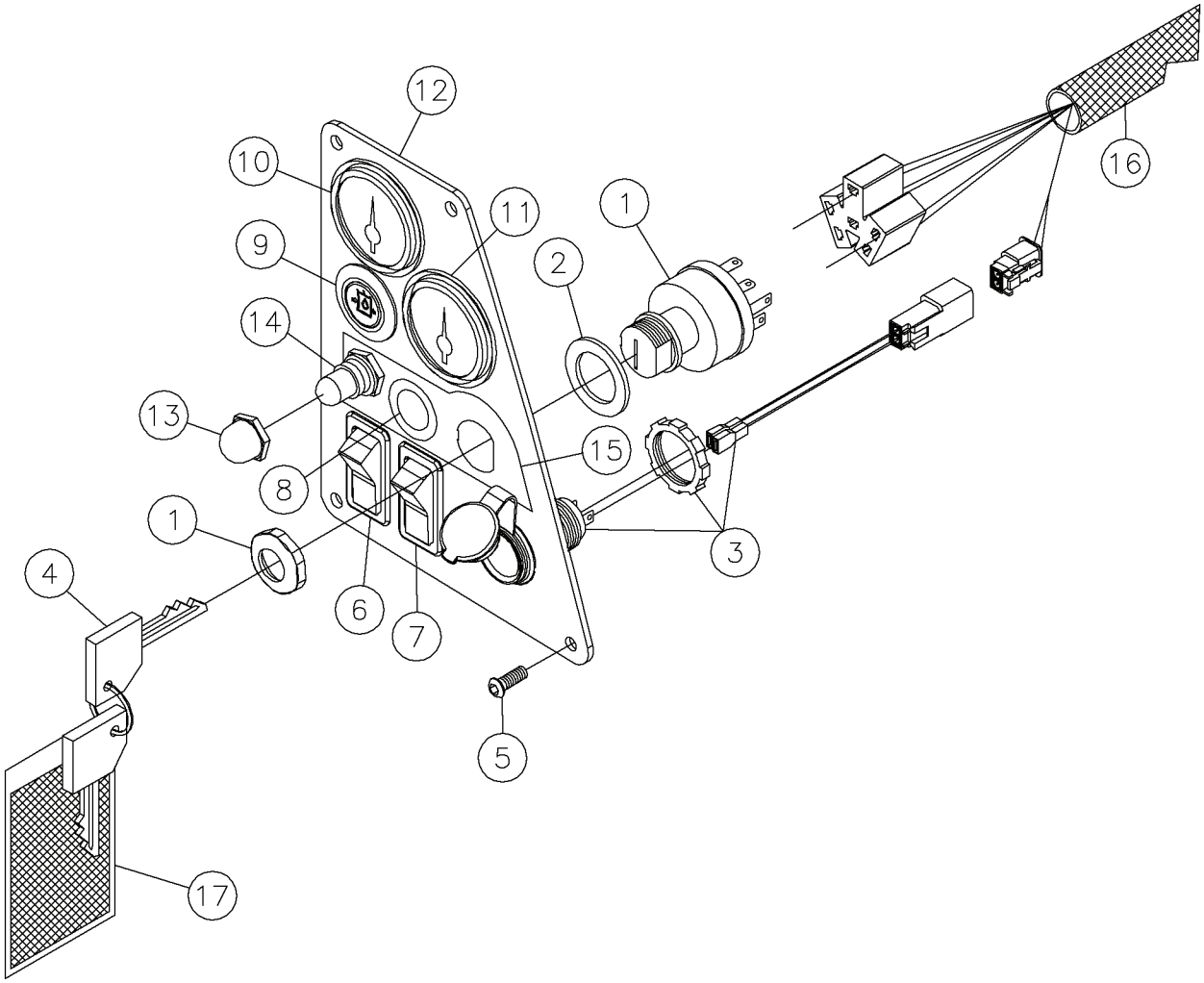

https://truckmanualshub.com/

Starter Control Panel Assembly (10' Rack) Fig 5-6r01

REF. NO.	*	PART NO.	DESCRIPTION	QTY.	REMARKS
		Revision Date	June, 2004		Update In Illustration & Parts List.
1		285597001	SWITCH - IGNITION	1	
2		483005	WASHER-1 1/2X1X14 GA M.B. REF T10919	1	
3		154677001	OUTLET - 12 VOLT	1	
4		285597002	KEYS - IGNITION SWITCH (MATCHED PAIR)	1	
5		278986001	SCREW - 1/4 - 20 X 3/4 GR8 SBHCS CZ	4	
6		277630001	ROCKER SWITCH-WASH WAND	1	
7		277635001	ROCKER SWITCH - LIGHTS	1	
8		65977001	PLUG-11/16 HOLE ARDEN-DP 687	1	
9		277699001	SWITCH - PUSH BUTTON HYDRAULIC ENABLE	1	
10		201793001	GAUGE-WATER TEMP DATCON 826EM	1	
11		201786001	GAUGE-FUEL DATCON 810EM	1	
12		277741001	STARTER PANEL	1	
13		90622001	COVER-PUSHBUTTON SWITCH 5/8-32	1	
14		66816001	SWITCH - MOMENTARY	1	
15		700IB520	DECAL - STARTER PANEL	1	
16		287716001	HARNESS - STARTER PANEL	1	
17		296264000	REMOTE ENGINE/HYDRAULIC LOCKOUT CARD	1	

https://truckmanualshub.com/

Starter Control Panel Assembly (10' Rack) Fig 5-6

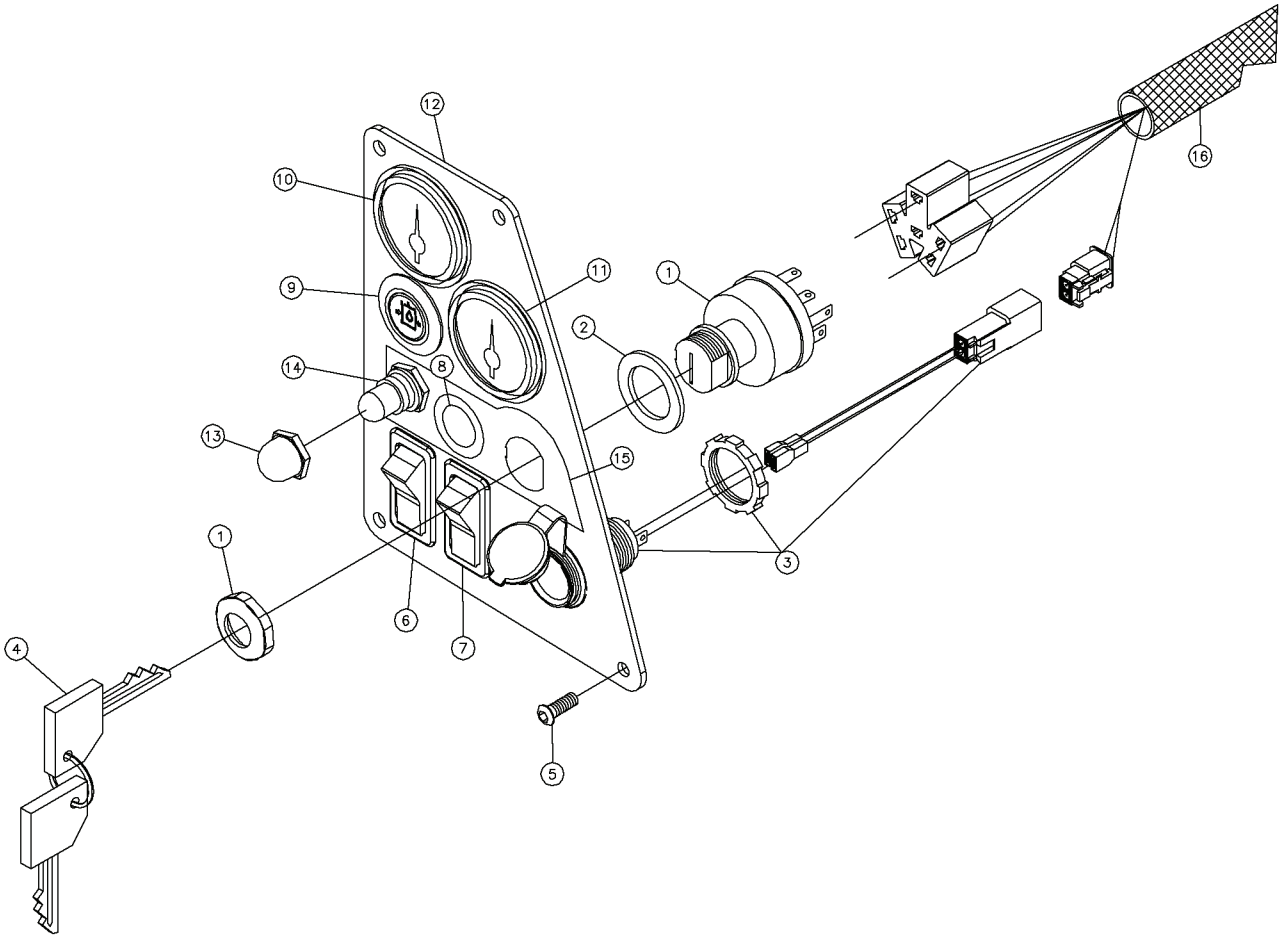

https://truckmanualshub.com/

Starter Control Panel Assembly (10' Rack) Fig 5-6

REF. NO.	*	PART NO.	DESCRIPTION	QTY.	REMARKS
1		285597001	SWITCH - IGNITION	1	
2		483005	WASHER-1 1/2X1X14 GA M.B.	1	
3		285604001	OUTLET - 12 VOLT	1	
4		285597002	KEYS - IGNITION SWITCH (MATCHED PAIR)	1	
5		278986001	SCREW - 1/4 - 20 X 3/4 GR8 SBHCS CZ	4	
6		277630001	ROCKER SWITCH-WASH WAND	1	
7		277635001	ROCKER SWITCH - LIGHTS	1	
8		65977001	PLUG-11/16 HOLE ARDEN-DP 687	1	
9		277699001	SWITCH - PUSH BUTTON HYDRAULIC ENABLE	1	
10		201793001	GAUGE-WATER TEMP DATCON 826EM	1	
11		201786001	GAUGE-FUEL DATCON 810EM	1	
12		277741001	STARTER PANEL	1	
13		90622001	COVER-PUSHBUTTON SWITCH 5/8-32	1	
14		66816001	SWITCH ASSY- #13389	1	
15		700IB520	DECAL - STARTER PANEL	1	
16		287716001	HARNESS - STARTER PANEL	1	

https://truckmanualshub.com/

Display Control Panel Assembly (15' Rack) Fig 5-7r01

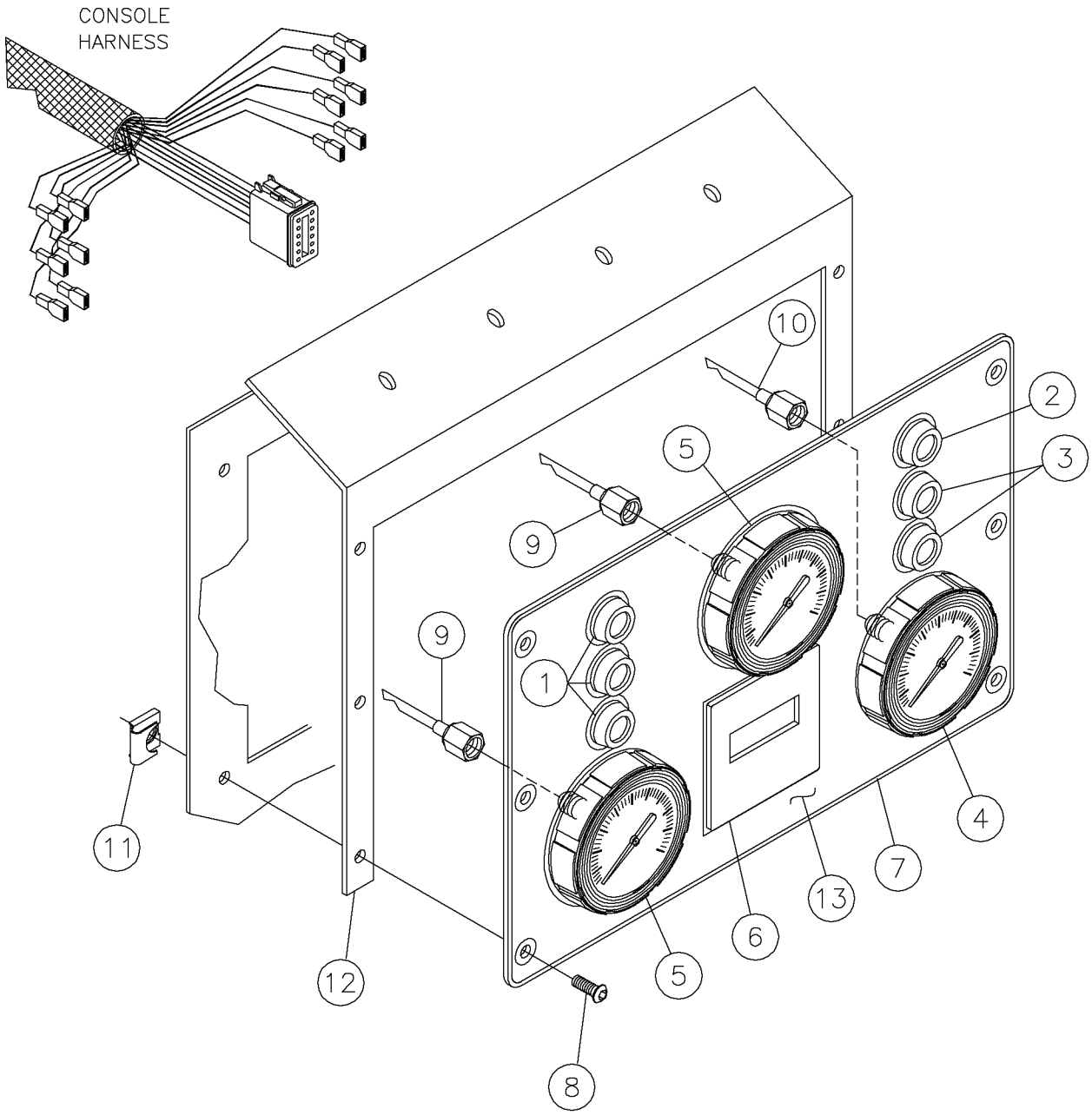

https://truckmanualshub.com/

Display Control Panel Assembly (15' Rack) Fig 5-7r01

REF. NO.	*	PART NO.	DESCRIPTION	QTY.	REMARKS
		Revision Date	June, 2004		Update In Illustration & Parts List.
1		27148001	LIGHT-RED WARNING	3	
1A		70889001	BULB. #112-1418	3	
2		81374001	LIGHT-GREEN WARNING #338-8049	1	
2A		70889001	BULB. #112-1418	1	
3		86581001	LIGHT-WARNING (AMBER)	2	
3A		70889001	BULB. #112-1418	2	
4		277616001	GAUGE - 2000 PSI SPAN JIC	1	
5		277618001	GAUGE - 7500 PSI SPAN JIC	2	
6		296262032	MODULE - M1114 WATER CONTROL	1	
7		278979001	PLATE-DISPLAY PANEL	1	
8		278986001	SCREW - 1/4 - 20 X 3/4 GR8 SBHCS CZ	6	
9		278923001	HOSE - .078X168 4FSJIC ST/ST MICRO 6900 PSI	2	
10		278922001	HOSE - .078X88 4FSJIC ST/ST MICRO 6900 PSI	1	
11		277650001	NUT-1/4-20 J CLIP FLOATING	6	
12		277694001	MOUNT LOCATOR	1	
13		7000B172	DECAL - CONTROL	1	

https://truckmanualshub.com/

Display Control Panel Assembly (15' Rack) Fig 5-7

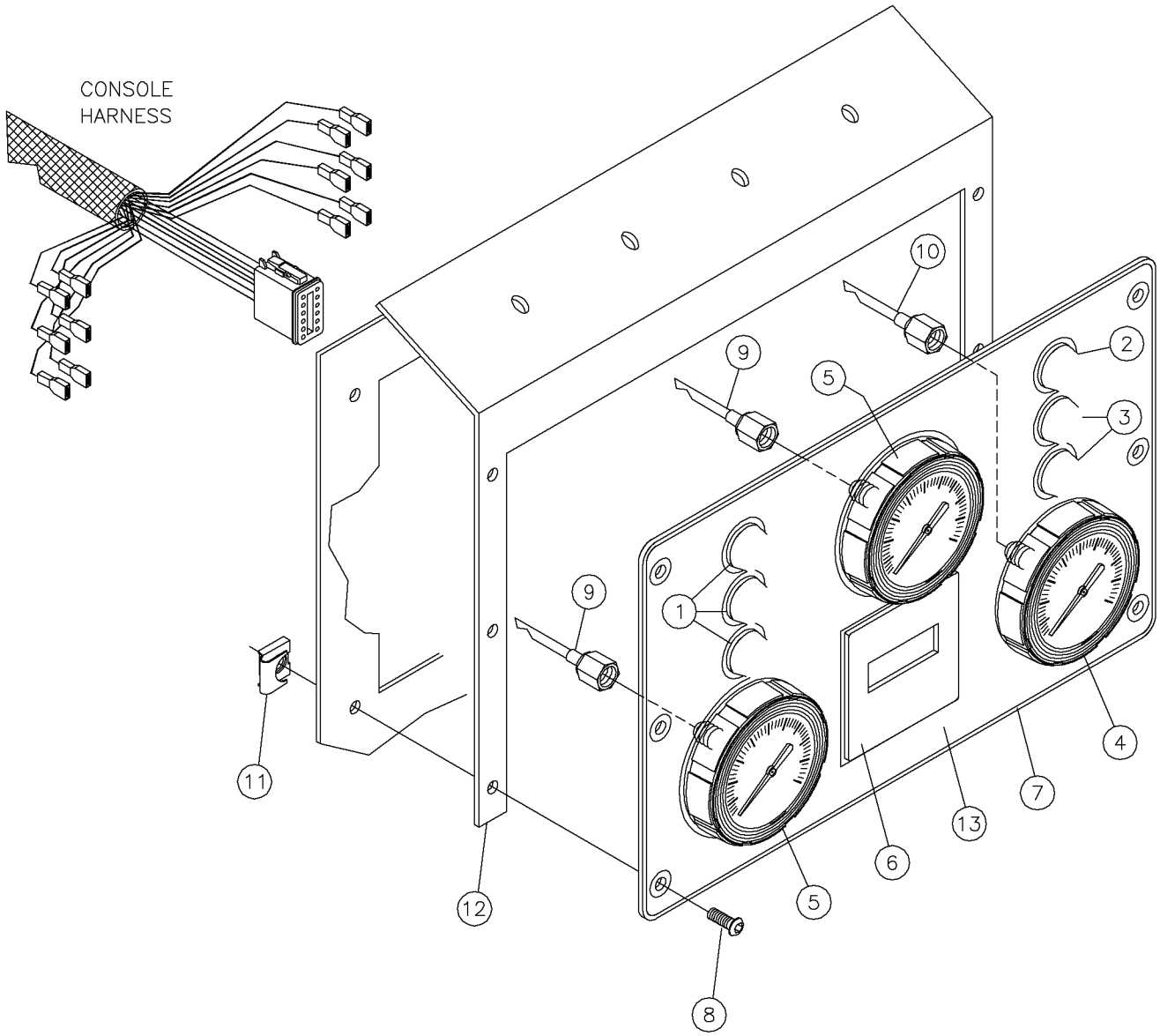

https://truckmanualshub.com/

Display Control Panel Assembly (15' Rack) Fig 5-7

REF. NO.	*	PART NO.	DESCRIPTION	QTY.	REMARKS
1		27148001	LIGHT-RED WARNING	3	
1A		70889001	BULB. #112-1418	3	
2		81374001	LIGHT-GREEN WARNING #338-8049	1	
2A		70889001	BULB. #112-1418	1	
3		86581001	LIGHT-WARNING (AMBER)	2	
3A		70889001	BULB. #112-1418	2	
4		277616001	GAUGE - 2000 PSI SPAN JIC	1	
5		277618001	GAUGE - 7500 PSI SPAN JIC	2	
6		283607001	WATER CONTROL MODULE	1	
7		278979001	PLATE-DISPLAY PANEL	1	
8		278986001	SCREW - 1/4 - 20 X 3/4 GR8 SBHCS CZ	6	
9		278923001	HOSE - .078X168 4FSJIC ST/ST MICRO 6900 PSI	2	
10		278922001	HOSE - .078X88 4FSJIC ST/ST MICRO 6900 PSI	1	
11		277650001	NUT-1/4-20 J CLIP FLOATING	6	
12		277694001	MOUNT LOCATOR	1	
13		7000B172	DECAL - CONTROL	1	

https://truckmanualshub.com/

Display Control Panel Assembly (10' Rack) Fig 5-8r01

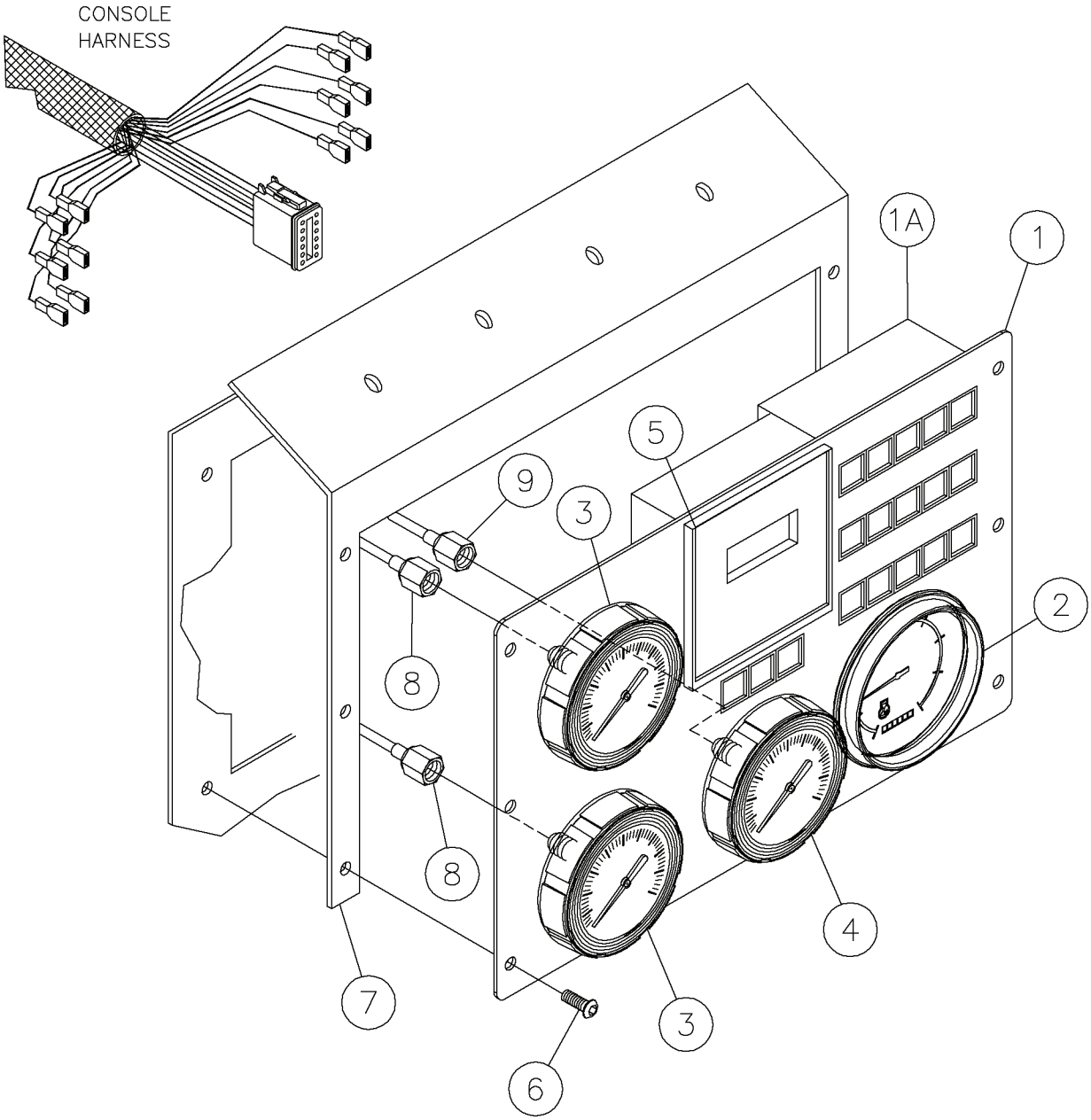

https://truckmanualshub.com/

Display Control Panel Assembly (10' Rack) Fig 5-8r01

REF. NO.	*	PART NO.	DESCRIPTION	QTY.	REMARKS
		Revision Date	June, 2004		Update In Illustration & Parts List.
1		289589001	ASSY - DISPLAY PANEL	1	
1A		296251031	LIGHT BOX SUB-ASSY	1	
2		201785001	TACH/HOURMETER DATCON 28A4EM	1	
3		289651001	GAUGE - 7500 PSI - SPAN - JIC - LIGHT	2	
4		289650001	GAUGE - 2000 PSI - SPAN - JIC - LIGHT	1	
5		296262032	MODULE - M1114 WATER CONTROL	1	
6		278986001	SCREW - 1/4 - 20 X 3/4 GR8 SBHCS CZ	6	
7		277694001	MOUNT LOCATOR	1	
8		278923001	HOSE - .078X168 4FSJIC ST/ST MICRO 6900 PSI	2	
9		278922001	HOSE - .078X88 4FSJIC ST/ST MICRO 6900 PSI	1	

https://truckmanualshub.com/

Display Control Panel Assembly (10' Rack) Fig 5-8

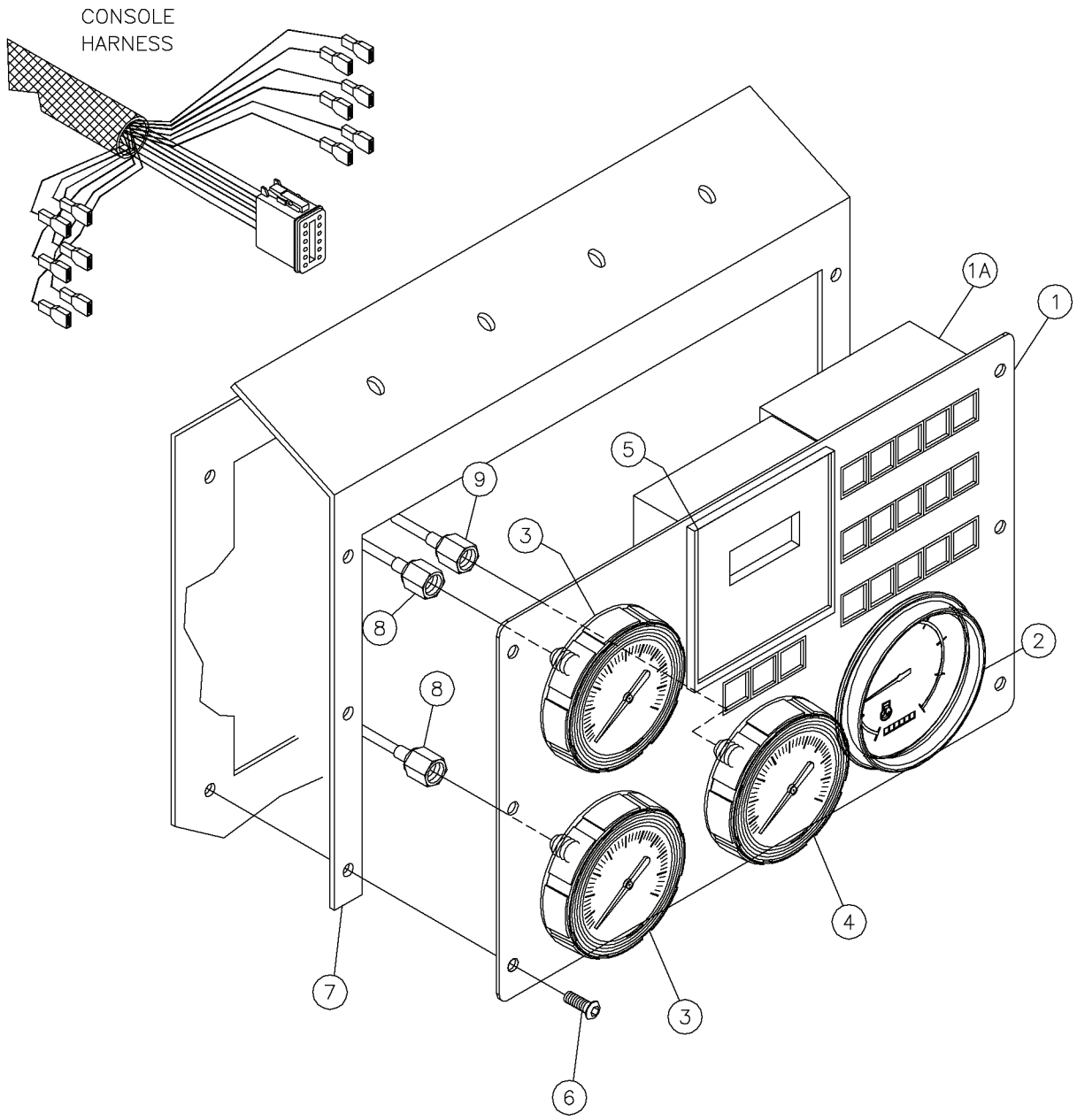

https://truckmanualshub.com/

Display Control Panel Assembly (10' Rack) Fig 5-8

REF. NO.	*	PART NO.	DESCRIPTION	QTY.	REMARKS
1		289589001	ASSY - DISPLAY PANEL	1	
1A		296251031	LIGHT BOX SUB-ASSY	1	
2		201785001	TACH/HOURMETER DATCON 28A4EM	1	
3		289651001	GAUGE - 7500 PSI - SPAN - JIC - LIGHT	2	
4		289650001	GAUGE - 2000 PSI - SPAN - JIC - LIGHT	1	
5		283607001	WATER CONTROL MODULE	1	
6		278986001	SCREW - 1/4 - 20 X 3/4 GR8 SBHCS CZ	6	
7		277694001	MOUNT LOCATOR	1	
8		278923001	HOSE - .078X168 4FSJIC ST/ST MICRO 6900 PSI	2	
9		278922001	HOSE - .078X88 4FSJIC ST/ST MICRO 6900 PSI	1	

https://truckmanualshub.com/

Rotation Control Panel Assembly (15' Rack) Fig 5-9

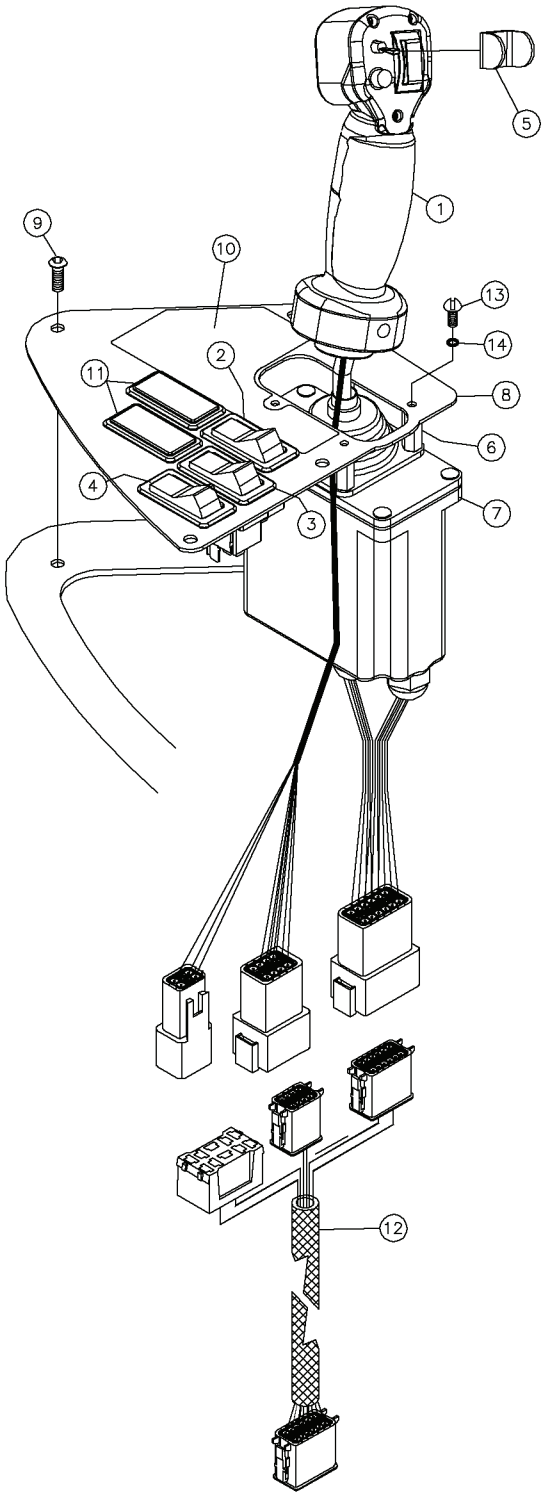

https://truckmanualshub.com/

Rotation Control Panel Assembly (15' Rack) Fig 5-9

REF. NO.	*	PART NO.	DESCRIPTION	QTY.	REMARKS
1		277746001	JOYSTICK GRIP - LEFT HAND (ROTATION)	1	(BREAKDOWN FIG 14-52)
2		277632001	ROCKER SWITCH-ROD LOADER SLIDE	1	
3		277633001	ROCKER SWITCH-ROD LOADER LIFT	1	
4		277660001	ROCKER SWITCH-FLUID CONTROL	1	
5		296250094	SWITCH - GUARD	1	
6		277651001	STANDOFF-3/8 HEX M/F 10-32 X 1	1	
7		277745001	JOYSTICK - LEFT CONTROLLER	1	(BREAKDOWN FIG 14-49)
8		277623001	PANEL - ROTATION CONTROL	1	
9		278986001	SCREW - 1/4 - 20 X 3/4 GR8 SBHCS CZ	4	
10		700IB173	DECAL - CONTROLS	1	
11		609566001	PLUG - ROCKER SWITCH FILLER	1	
12		277723001	HARNESS - ROD LOADER SWITCHES	1	
13		1802004	BOLT-3/16”NF X 1/2” STOVE	4	
14		480001	WASHER-3/16 S/T LOCK	4	

https://truckmanualshub.com/

Rotation Control Panel Assembly (10' Rack) Fig 5-10

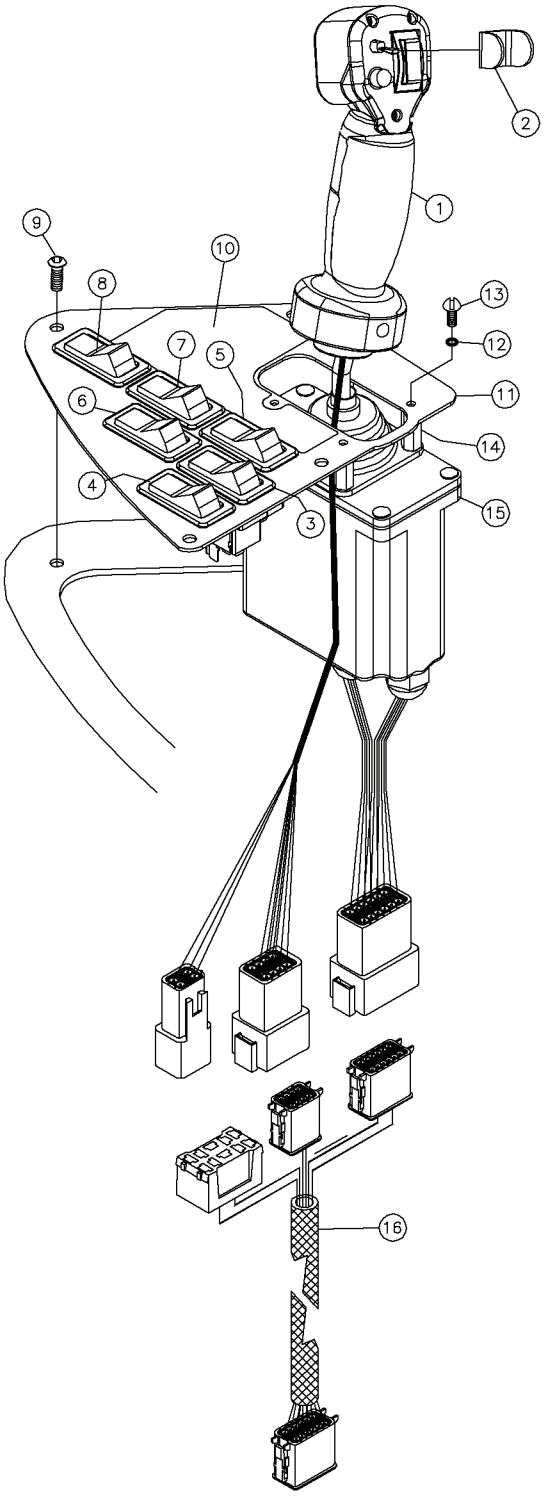

https://truckmanualshub.com/

Rotation Control Panel Assembly (10' Rack) Fig 5-10

REF. NO.	*	PART NO.	DESCRIPTION	QTY.	REMARKS
1		277746001	JOYSTICK GRIP - LEFT HAND (ROTATION)	1	(BREAKDOWN FIG 14-52)
2		296250094	SWITCH - GUARD	1	
3		277633001	ROCKER SWITCH-ROD LOADER LIFT	1	
4		289608001	SWITCH-ROCKER PICK'N XYX PLACE	1	
5		289610001	SWITCH-ROCKER ROD LOADER COMB	1	
6		289609001	SWITCH-ROCKER ROD LOADER AUTO/ MANUAL	1	
7		289611001	SWITCH-ROCKER ROD LOADER BLOCKER	1	
8		277660001	ROCKER SWITCH-FLUID CONTROL	1	
9		278986001	SCREW - 1/4 - 20 X 3/4 GR8 SBHCS CZ	4	
10		700IB173	DECAL - CONTROLS	1	
11		285914001	PANEL - ROTATION CONTROL	1	
12		480001	WASHER-3/16 S/T LOCK	4	
13		1802004	BOLT-3/16"NF X 1/2" STOVE	4	
14		277651001	STANDOFF-3/8 HEX M/F 10-32 X 1	1	
15		277745001	JOYSTICK - LEFT CONTROLLER	1	(BREAKDOWN FIG 14-49)
16		294630001	HARNESS ROD LOADER SWITCHES	1	

https://truckmanualshub.com/

Thrust Control Panel Assembly Fig 5-11r01

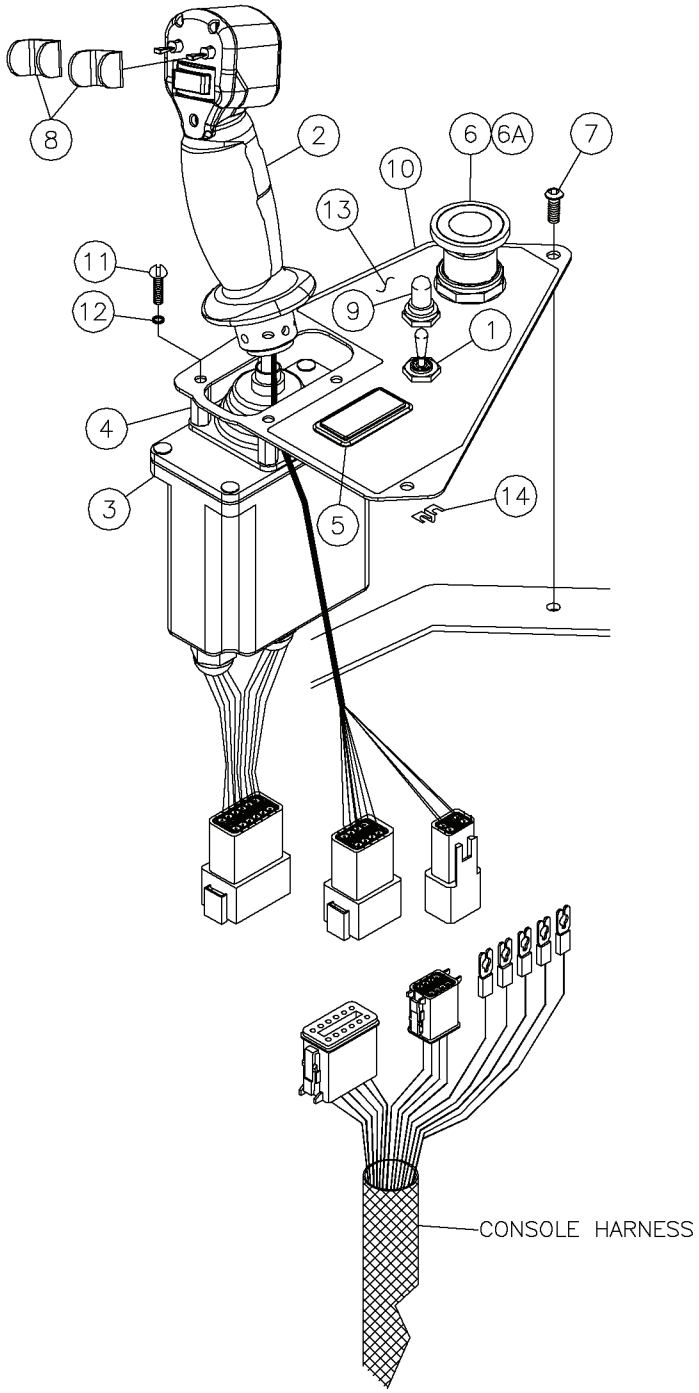

https://truckmanualshub.com/

Thrust Control Panel Assembly Fig 5-11r01

REF. NO.	*	PART NO.	DESCRIPTION	QTY.	REMARKS
		Revision Date	June, 2004		Update In Illustration & Parts List.
1		86579001	SWITCH-4 POLE ON-ON-ON	1	
2		277614001	JOYSTICK GRIP -RIGHT HAND	1	(BREAKDOWN FIG 14-51)
3		277744001	JOYSTICK - RIGHT CONTROLLER	1	(BREAKDOWN FIG 14-50)
4		277651001	STANDOFF-3/8 HEX M/F 10-32 X 1	4	
5		609566001	PLUG - ROCKER SWITCH FILLER	1	
6		296259684	BUTTON - RED PUSH/PULL	1	
6A		180005209	ADAPTER WASHER 22MM TO 30MM	1	
7		278986001	SCREW - 1/4 - 20 X 3/4 GR8 SBHCS CZ	3	
8		296250094	SWITCH - GUARD	2	
9		5537001	COVER-TOGGLE SWITCH	1	
10		277622001	PANEL - THRUST CONTROL	1	
11		1802004	BOLT-3/16”NF X 1/2” STOVE	4	
12		480001	WASHER-3/16 S/T LOCK	4	
13		7000B169	DECAL - CONTROL	1	
14		66482001	TERMINAL JUMPER CURTIS 247-A20	1	

https://truckmanualshub.com/

Thrust Control Panel Assembly Fig 5-11

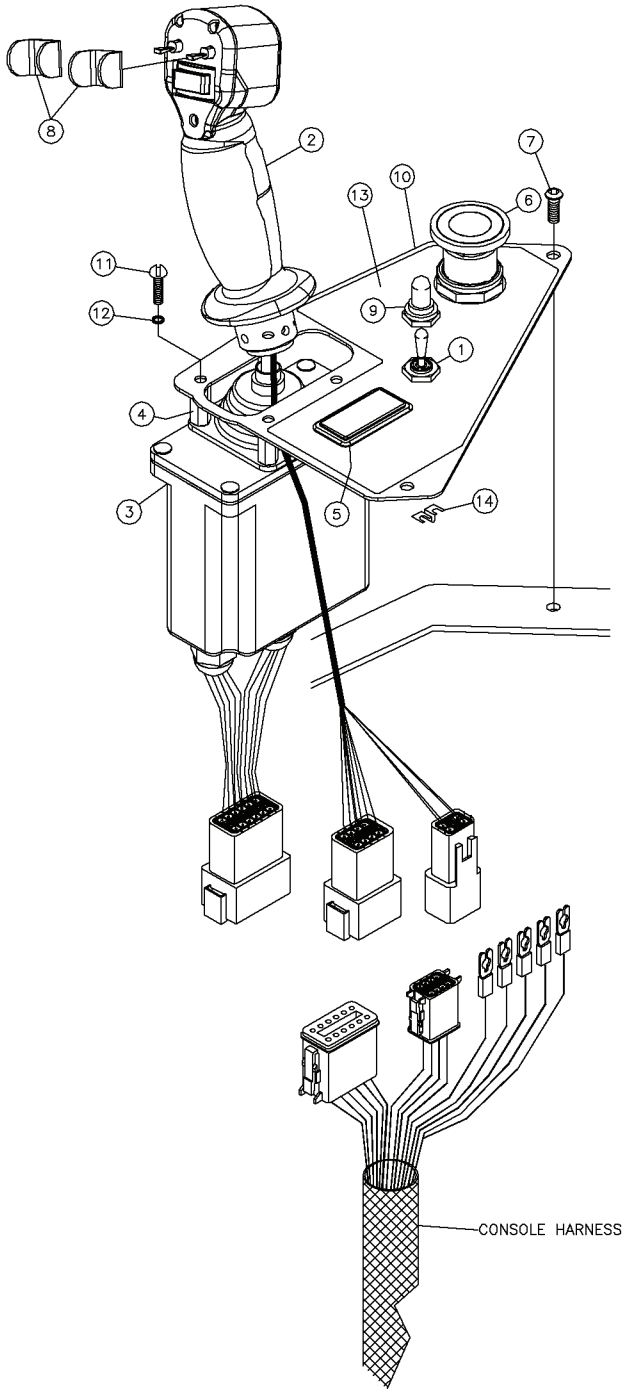

https://truckmanualshub.com/

Thrust Control Panel Assembly Fig 5-11

REF. NO.	*	PART NO.	DESCRIPTION	QTY.	REMARKS
1		86579001	SWITCH-4 POLE ON-ON-ON	1	
2		277614001	JOYSTICK GRIP -RIGHT HAND	1	(BREAKDOWN FIG 14-51)
3		277744001	JOYSTICK - RIGHT CONTROLLER	1	(BREAKDOWN FIG 14-50)
4		277651001	STANDOFF-3/8 HEX M/F 10-32 X 1	4	
5		609566001	PLUG - ROCKER SWITCH FILLER	1	
6		86575001	OPERATOR-PUSH/PULL W/O BUTTON	1	
6A		904563001	E-STOP LENS	1	
6B		215998001	BLOCK-N.C. CONTACT	1	
7		278986001	SCREW - 1/4 - 20 X 3/4 GR8 SBHCS CZ	3	
8		296250094	SWITCH - GUARD	2	
9		5537001	COVER-TOGGLE SWITCH	1	
10		277622001	PANEL - THRUST CONTROL	1	
11		1802004	BOLT-3/16”NF X 1/2” STOVE	4	
12		480001	WASHER-3/16 S/T LOCK	4	
13		7000B169	DECAL - CONTROL	1	
14		66482001	TERMINAL JUMPER CURTIS 247-A20	1	

https://truckmanualshub.com/

Accessory Panel Assembly (15' Rack) Fig 5-12r01

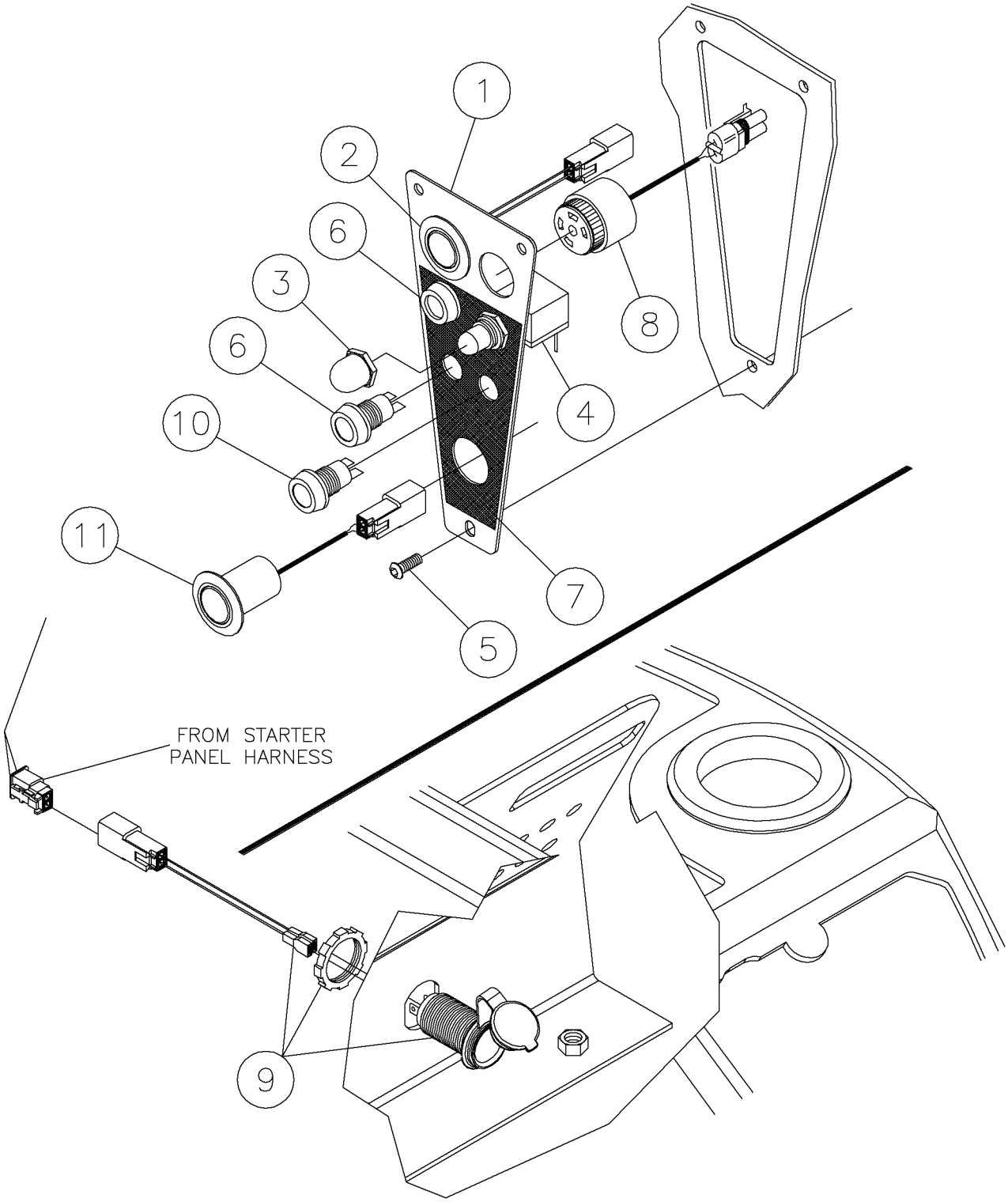

https://truckmanualshub.com/

Accessory Panel Assembly (15' Rack) Fig 5-12r01

REF. NO.	*	PART NO.	DESCRIPTION	QTY.	REMARKS
		Revision Date	June, 2004		Update In Illustration & Parts List.
1		296252916	RLE-D33 X 44 - 10 FT ACCESSORY PANEL	1	
2		277699001	SWITCH - PUSH BUTTON HYDRAULIC ENABLE	1	
3		90622001	COVER-PUSHBUTTON SWITCH 5/8-32	1	
4		66816001	SWITCH - MOMENTARY	1	
5		278986001	SCREW - 1/4 - 20 X 3/4 GR8 SBHCS CZ	3	
6		27148001	LIGHT-RED WARNING	2	
7		700IB836	DECAL - ACCESSORY PANEL	1	
8		286920001	REMOTE LOCKOUT BUZZER	1	
9		154677001	OUTLET - 12 VOLT	1	
10		81374001	LIGHT-GREEN WARNING #338-8049	1	
11		257248001	SWITCH-PUSH BUTTON (NO)	1	

https://truckmanualshub.com/

Accessory Panel Assembly (15' Rack) Fig 5-12

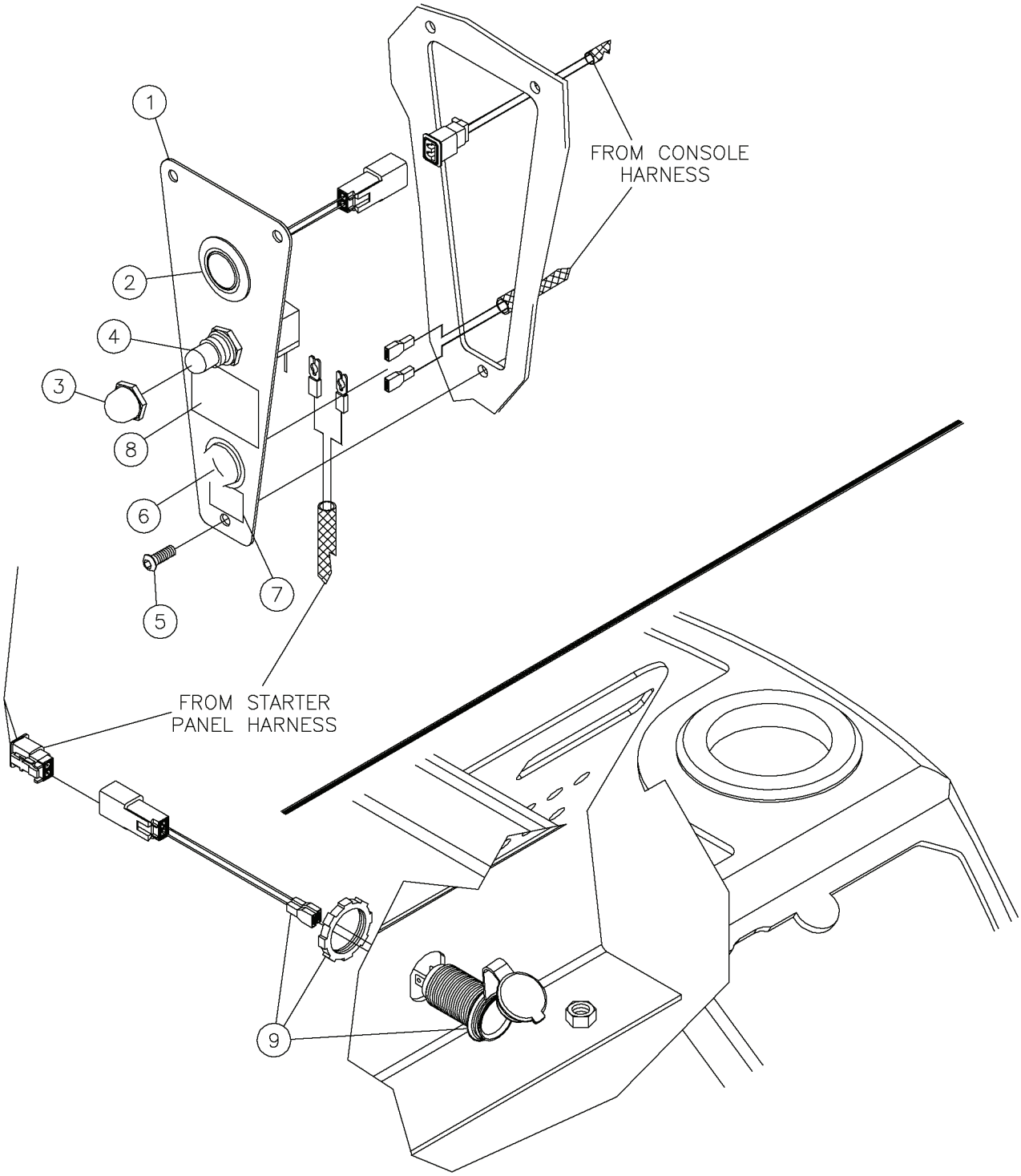

https://truckmanualshub.com/

Accessory Panel Assembly (15' Rack) Fig 5-12

REF. NO.	*	PART NO.	DESCRIPTION	QTY.	REMARKS
1		277704001	PANEL - ACCESSORY	1	
2		277699001	SWITCH - PUSH BUTTON HYDRAULIC ENABLE	1	
3		90622001	COVER-PUSHBUTTON SWITCH 5/8-32	1	
4		66816001	SWITCH ASSY- #13389	1	
5		278986001	SCREW - 1/4 - 20 X 3/4 GR8 SBHCS CZ	3	
6		27148001	LIGHT-RED WARNING	1	
7		700IB438	DECAL - WARNING LIGHT	1	
8		700IA193	DECAL-ETHER STARTING (UND)	1	
9		285604001	OUTLET - 12 VOLT	1	

https://truckmanualshub.com/

Accessory Panel Assembly (10' Rack) Fig 5-13r01

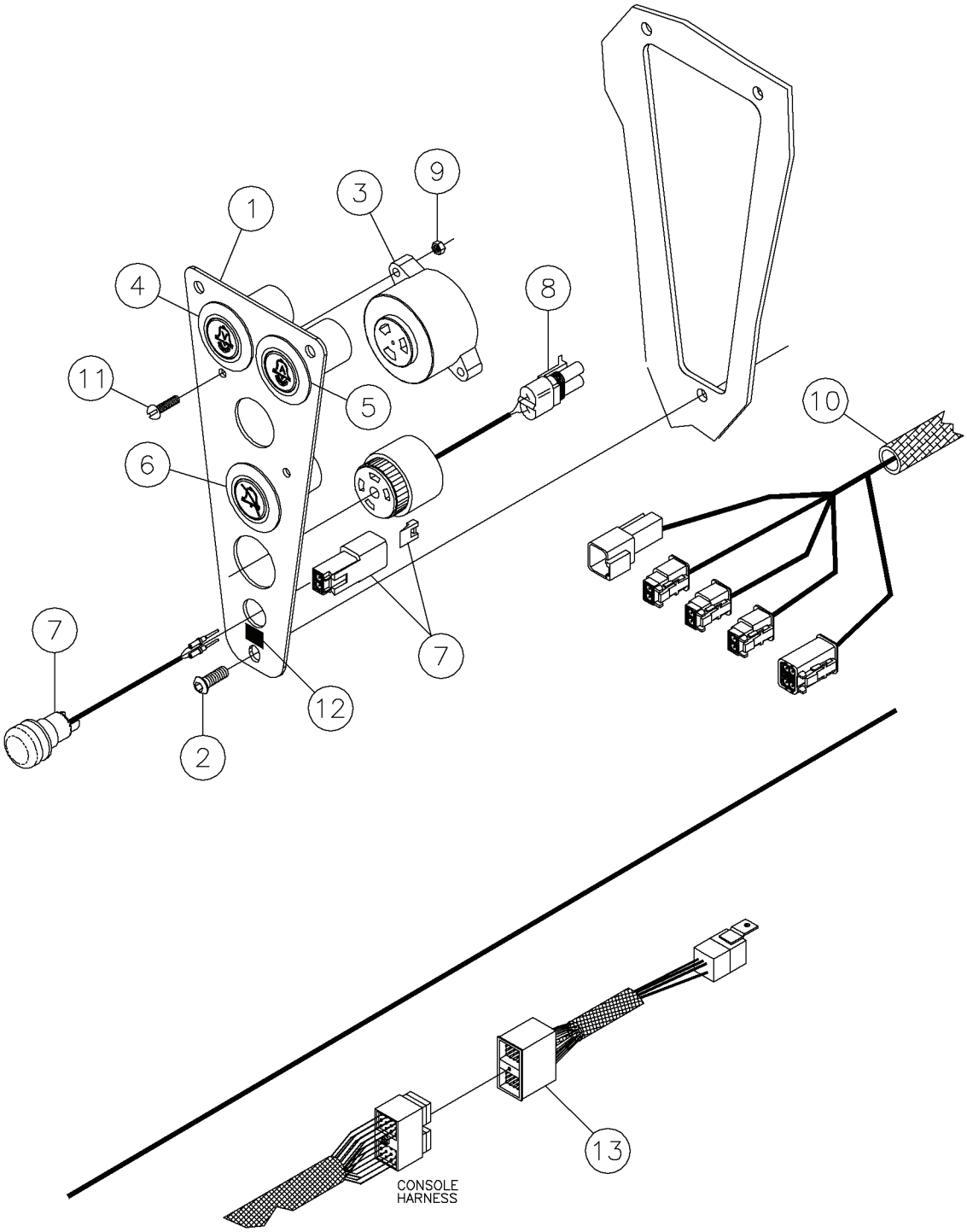

https://truckmanualshub.com/

Accessory Panel Assembly (10' Rack) Fig 5-13r01

REF. NO.	*	PART NO.	DESCRIPTION	QTY.	REMARKS
		Revision Date	June, 2004		Update In Illustration & Parts List.
1		296260389	PANEL - ZAP ALERT AND LOCKOUT TEST	1	
2		278986001	SCREW - 1/4 - 20 X 3/4 GR8 SBHCS CZ	3	
3		285617001	HORN - ZAP ALERT 2 PIN DEUTCSH	1	
4		277696001	SWITCH - PUSH BUTTON ZAP ALERT VOLTAGE TEST	1	
5		277697001	SWITCH - PUSH BUTTON ZAP ALERT CURRENT TEST	1	
6		277695001	SWITCH - PUSH BUTTON ZAP ALERT RESET	1	
7		260766001	SWITCH-MOM BUTTON NO	1	
8		286920001	REMOTE LOCKOUT BUZZER	1	
9		69759001	LOCK NUT-#8-32 NYLON INSERT PL	2	
10		287723001	HARNESS - ZAP ALERT PANEL	1	
11		296252288	SCREW - 8 - 32 X 2 PHIL ROUND HD ZP	2	
12		700IB837	DECAL - LOCK	1	
13		296260259	HARNESS - REMOTE LOCKOUT JUMPER	1	

https://truckmanualshub.com/

Accessory Panel Assembly (10' Rack) Fig 5-13

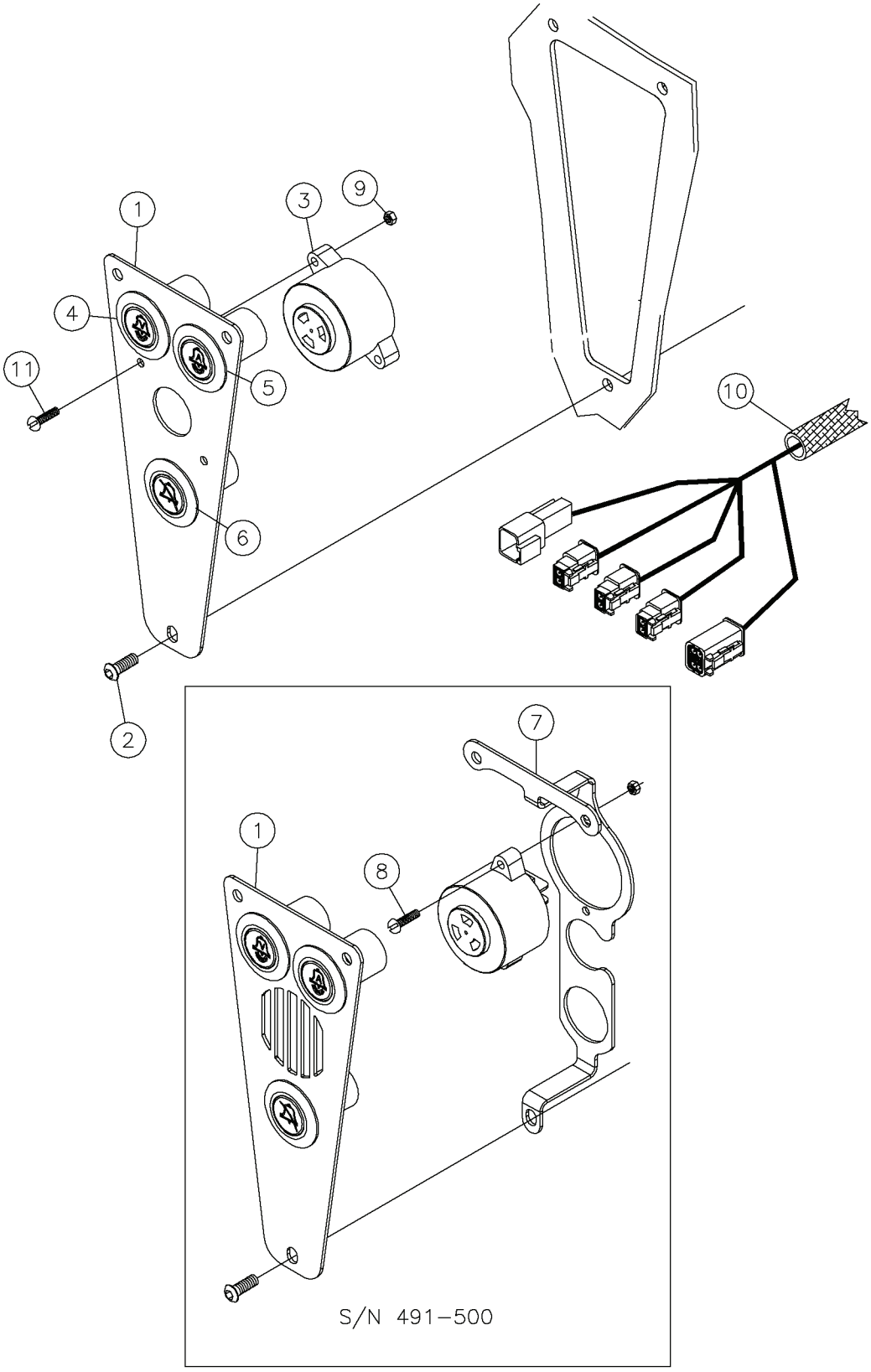

https://truckmanualshub.com/

Accessory Panel Assembly (10' Rack) Fig 5-13

REF. NO.	*	PART NO.	DESCRIPTION	QTY.	REMARKS
1		277743001	PANEL - ACCESSORY	1	REDESIGN (S/N 501)
2		278986001	SCREW - 1/4 - 20 X 3/4 GR8 SBHCS CZ	3	
3		285617001	HORN - ZAP ALERT 2 PIN DEUTCSH	1	
4		277696001	SWITCH-PUSH BUTTON ZAP ALERT VOLTAGE TEST	1	
5		277697001	SWITCH-PUSH BUTTON ZAP ALERT CURRENT TEST	1	
6		277695001	SWITCH - PUSH BUTTON ZAP ALERT RESET	1	
7		289664001	MOUNT HORNS	1	S/N 491-500
8		10530006	SCREW-#8-32X3/4 SLOT RD.HD.	2	S/N 491-500
9		69759001	LOCK NUT-#8-32 NYLON INSERT PL	2	
10		287723001	HARNESS - ZAP ALERT PANEL	1	
11		296252288	SCREW - 8 - 32 X 2 PHIL ROUND HD ZP	2	S/N 501 -

https://truckmanualshub.com/

Rear Angle/Throttle/Outrigger Control Panel Assembly Fig 5-14

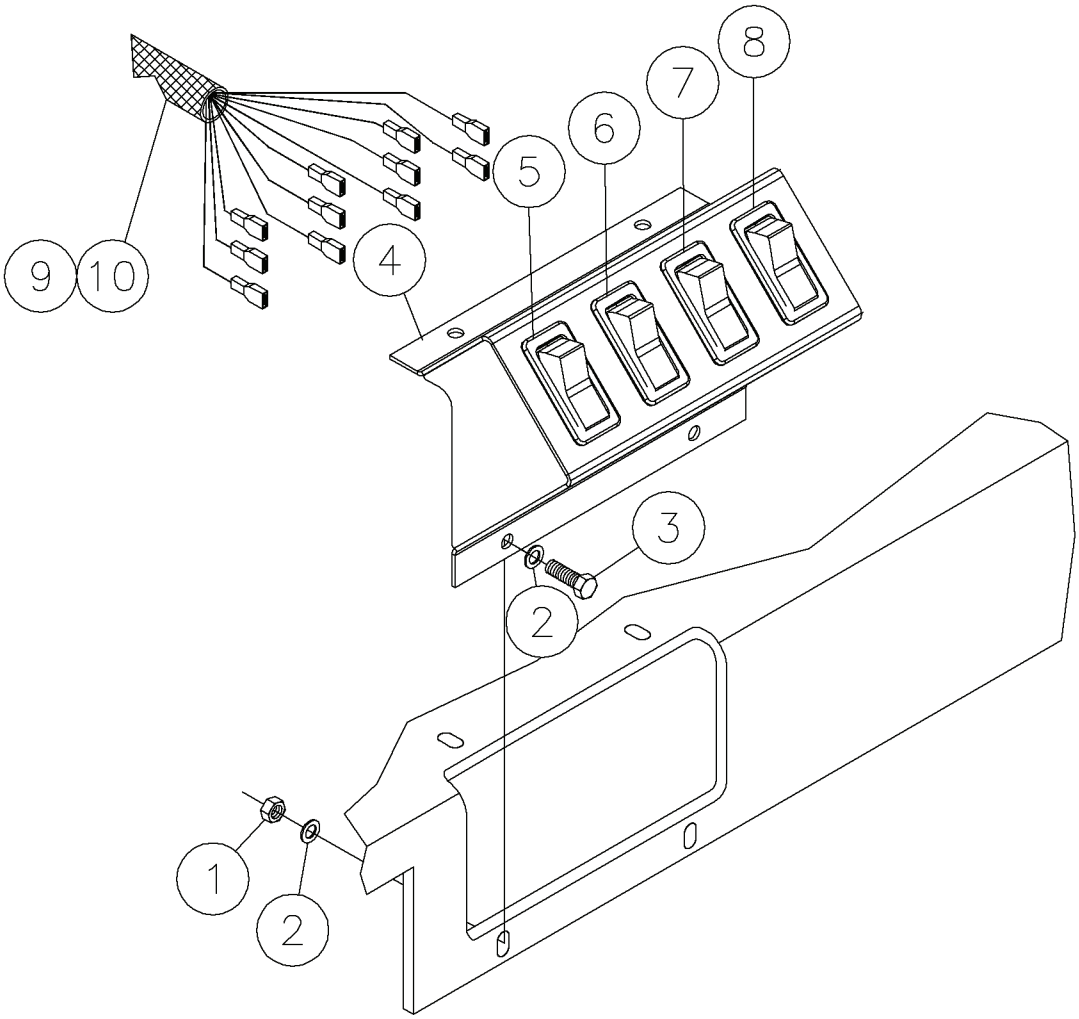

https://truckmanualshub.com/

Rear Angle/Throttle/Outrigger Control Panel Assembly Fig 5-14

REF. NO.	*	PART NO.	DESCRIPTION	QTY.	REMARKS
1		235732001	NUT-1/4-20 GR8 ZINC PLTD	4	
2		235716001	WASHER-1/4 SAE HARD ZINC PLTD	8	
3		235734001	BOLT-1/4-20X3/4 GR8 ZINC PLTD	4	
4		277707001	MOUNT - ROCKET SWITCHES	1	
5		277603001	ROCKER SWITCH-LEFT OUTRIGGER	1	
6		277604001	ROCKER SWITCH-RIGHT OUTRIGGER	1	
7		277647001	SWITCH -RACK ANGLE ROCKER	1	
8		277700001	ROCKER SWITCH - ENGINE THROTTLE	1	
9		278995001	HARNESS - D33X44 REAR RACK	1	(15’ RACK)
10		294628001	HARNESS - REAR RACK	1	(10’ RACK)

https://truckmanualshub.com/

Electrical Harness Assembly - Console, Engine, Rack Fig 5-15

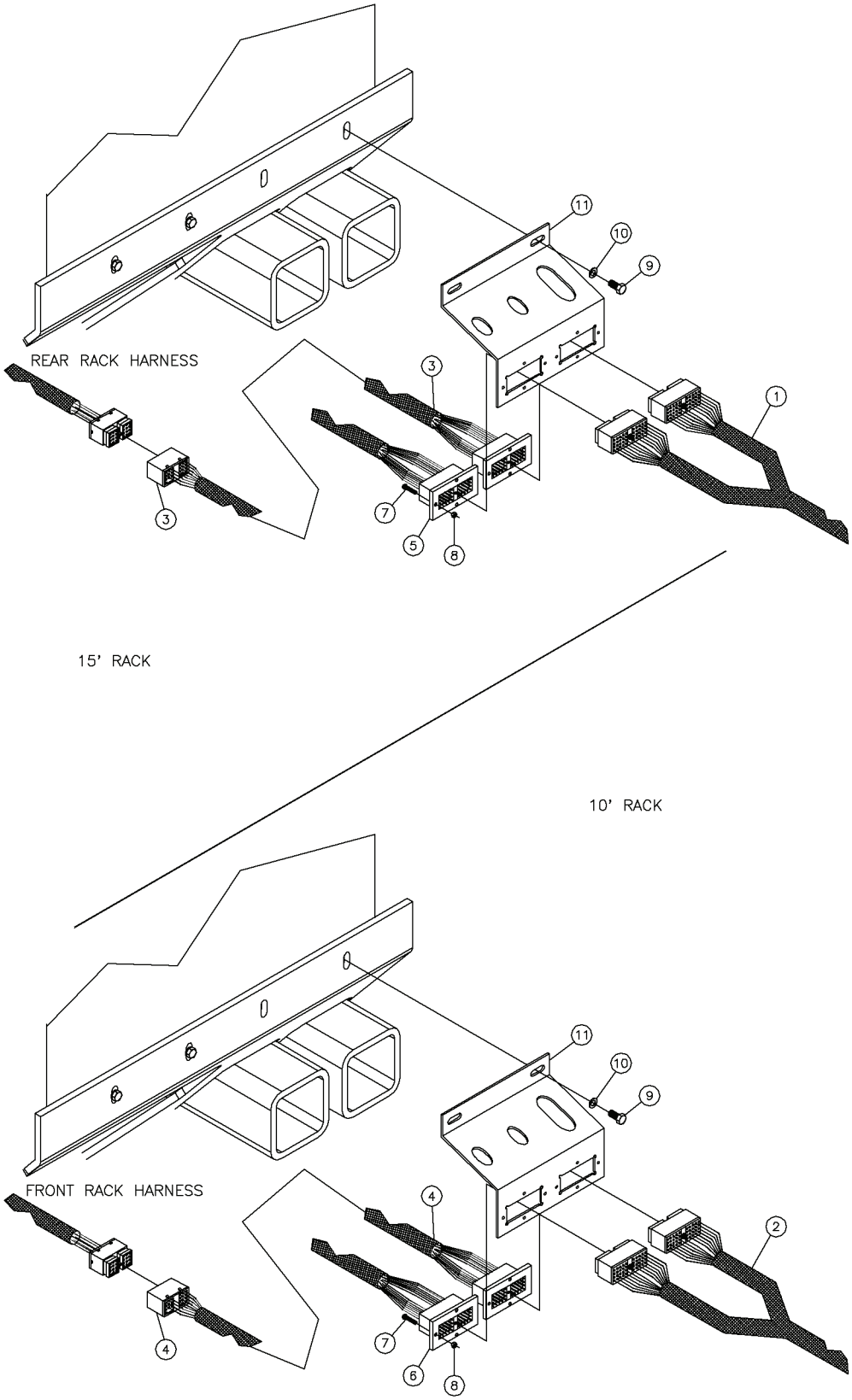

https://truckmanualshub.com/

Electrical Harness Assembly - Console, Engine, Rack Fig 5-15

REF. NO.	*	PART NO.	DESCRIPTION	QTY.	REMARKS
1		277724001	HARNESS - D33X44 CONSOLE	1	(15’ RACK)
2		294631001	HARNESS - CONSOLE	1	(10’ RACK)
3		277733001	HARNESS - FRONT RACK	1	(15’ RACK)
4		294628001	HARNESS - REAR RACK	1	(10’ RACK)
5		277661001	HARNESS - ENGINE BAY	1	(15’ RACK)
6		294627001	HARNESS - ENGINE BAY WIRE	1	(10’ RACK)
7		10530012	SCREW-8-32X1 1/4 RDHDSLOT MACH	8	
8		69759001	LOCK NUT-#8-32 NYLON INSERT PL	8	
9		240310001	BOLT-3/8-16X1/2 GR8 ZINC PLTD	2	
10		235713001	WASHER-3/8 SAE HARD ZINC PLTD	2	
11		277693001	MOUNT - HARNESS	1	

https://truckmanualshub.com/

Seat Assembly Fig 5-16

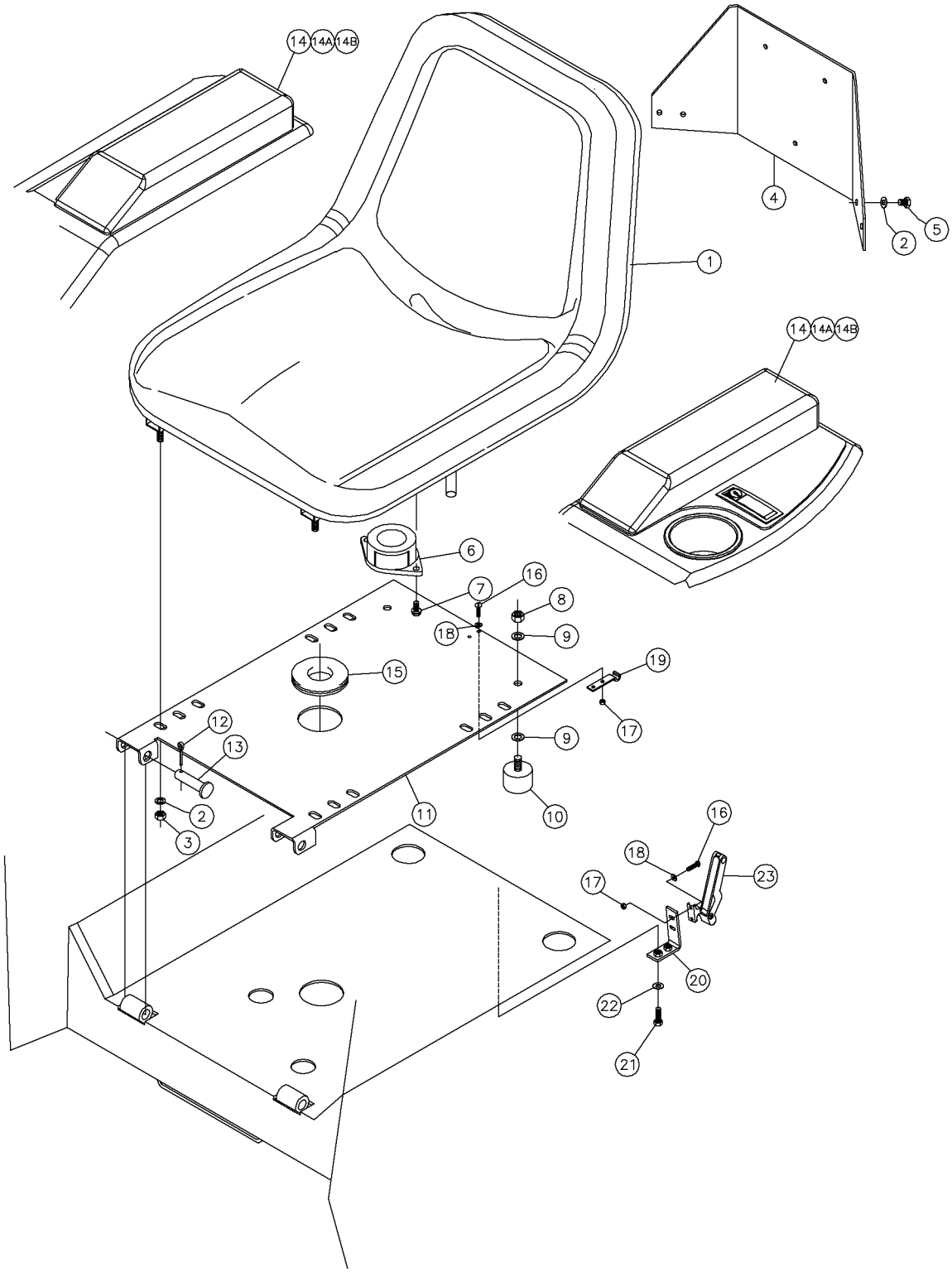

https://truckmanualshub.com/

Seat Assembly Fig 5-16

REF. NO.	*	PART NO.	DESCRIPTION	QTY.	REMARKS
1		279361001	SEAT - MILSCO W/ ONE FOAM PC.	1	
2		235714001	WASHER-5/16 SAE HARD ZINC PLTD	8	
3		235741001	NUT-5/16-18 GR8 ZINC PLTD	4	
4		235683001	MOUNT-MANUAL BOX	1	
5		235740001	BOLT-5/16-18X1/2 GR8 ZINC PLT	4	
6		279361003	SWITCH - SAFETY (SEALED)	1	
7		4473004	BOLT - 1/4-20X1/2 FLGE WHIZ	2	
8		235725001	NUT-3/8-16 GR8 ZINC PLTD	2	
9		235713001	WASHER-3/8 SAE HARD ZINC PLTD	4	
10		122474001	MOUNT-SANDWICH SINGLE STUD	2	
11		277507001	SEAT MOUNT	1	
12		510009	COTTER PIN-1/8” X 1”	2	
13		277732001	PIN - CLEVIS PLATED	2	
14		287682001	ARM REST	2	
14A		235716001	WASHER-1/4 SAE HARD ZINC PLTD	6	
14B		235732001	NUT-1/4-20 GR8 ZINC PLTD	6	
15		902401001	GROMMET-1 45/64”RUBBER	1	
16		10530006	SCREW-#8-32X3/4 SLOT RD.HD.	4	
17		69759001	LOCK NUT-#8-32 NYLON INSERT PL	4	
18		224769001	WASHER-#8 FLAT	4	
19		281828001	HOOK - LATCH	1	
20		281831001	LATCH - SOUTHCO SOFT	1	
21		235734001	BOLT-1/4-20X3/4 GR8 ZINC PLTD	2	
22		485003	WASHER-1/4 FLAT	2	
23		281831001	LATCH - SOUTHCO SOFT	1	

https://truckmanualshub.com/

Seat Actuator Assembly Fig 5-17

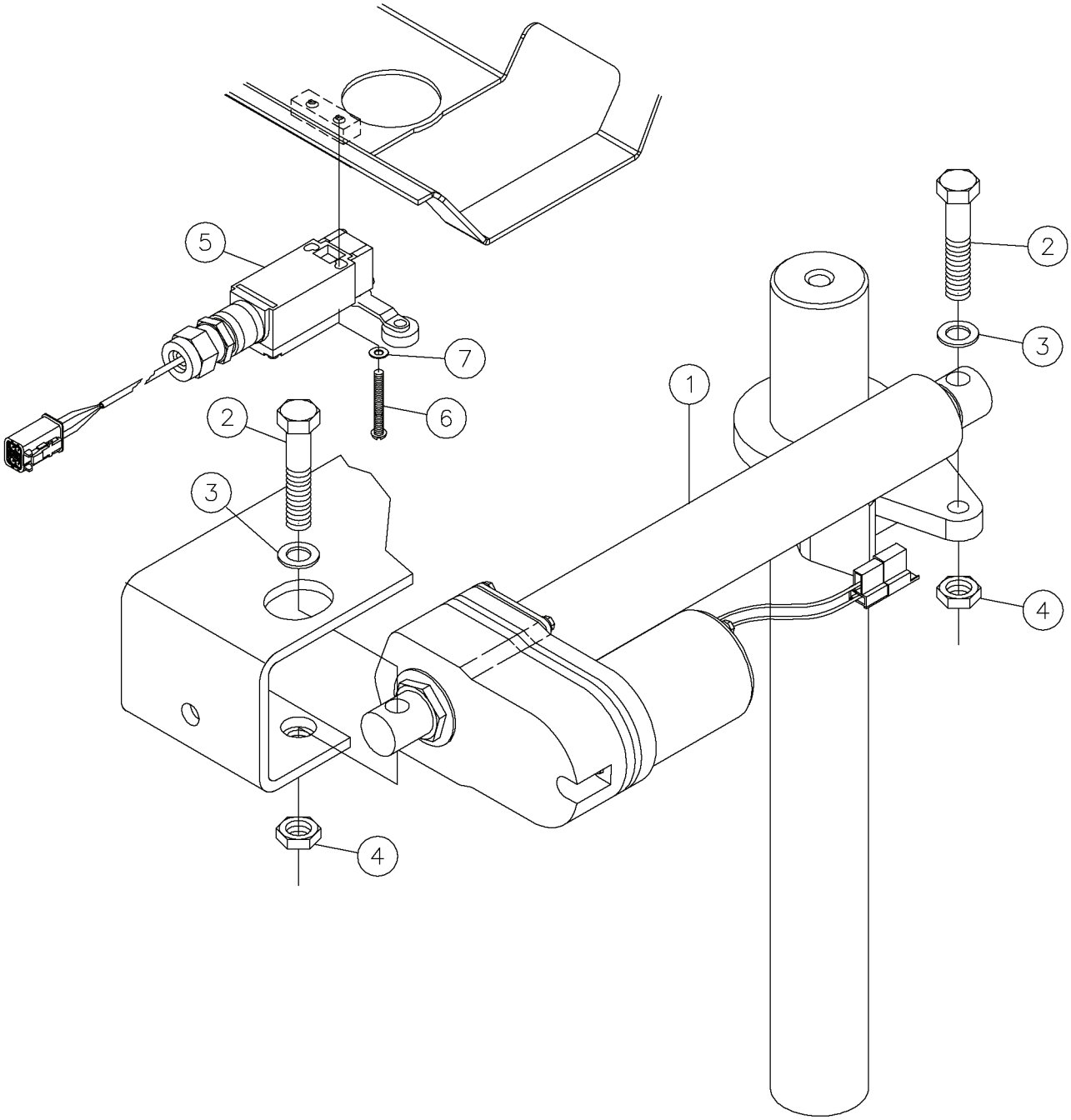

https://truckmanualshub.com/

Seat Actuator Assembly Fig 5-17

REF. NO.	*	PART NO.	DESCRIPTION	QTY.	REMARKS
1		52864001	ACTUATOR-D12-10A5-06	1	
1A		52864003	MOTOR-12V DC	1	
1B		52864005	SEALING KIT	1	
1C		52864007	INTERMEDIATE GEAR-10:1	1	
1D		52864009	CLUTCH	1	
2		250573001	BOLT-1/2-13 X 2 1/2 GR8 HX Y/Z	2	
3		485025	WASHER-1/2 FLAT-HARDENED-ZINC	2	
4		75383001	NUT-1/2-UNC GR.8 JAM HEX	2	
5		276467001	SWITCH - LIMIT NO/NC LEVER/ROLLER	1	
6		10530012	SCREW-8-32X1 1/4 RDHDSLOT MACH	2	
7		224769001	WASHER-#8 FLAT	2	

https://truckmanualshub.com/

Throttle Control Solenoid Assembly Fig 5-18

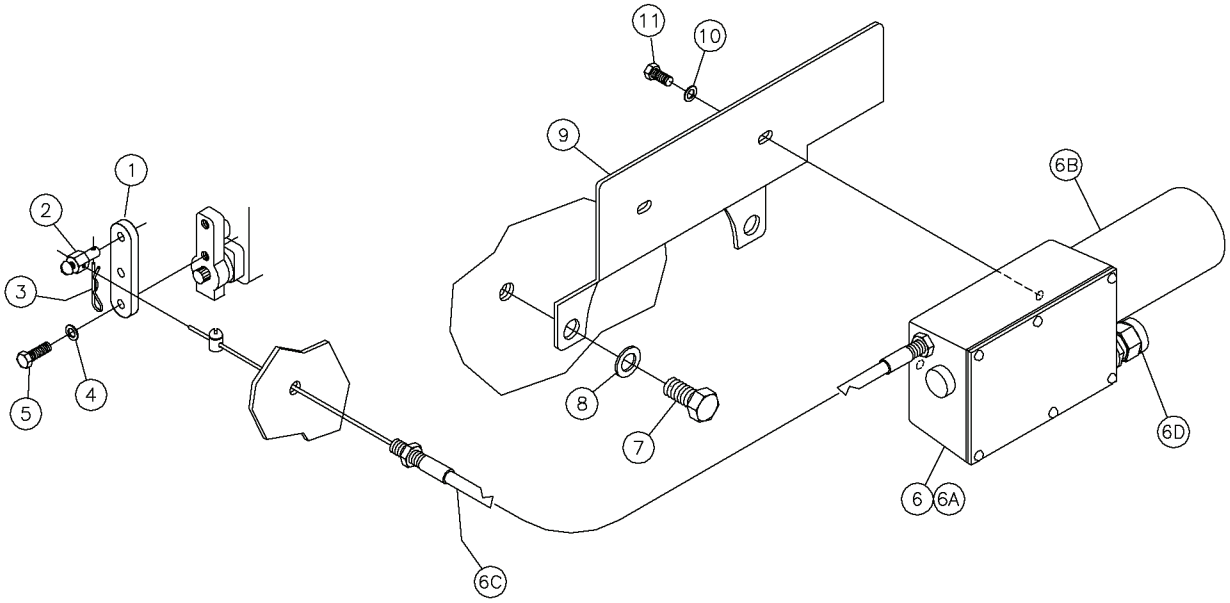

https://truckmanualshub.com/

Throttle Control Solenoid Assembly Fig 5-18

REF. NO.	*	PART NO.	DESCRIPTION	QTY.	REMARKS
1		251205001	BAR - THROTTLE ARM	1	
2		2809001	PIVOT AO47641	1	
3		1794007	HAIR PIN COTTER - .080 WIRE	1	
4		250511001	WASHER - 6 MM HARD Y/ZINC	2	
5		243776001	BOLT-6M X 16M HEX METRIC Y/ZINC	2	
6		278758001	SOLENOID 0 THROTTLE	1	INC. REF. 6A,6B,6C,6D
6A		278758003	CIRCUIT BOARD W/ GASKET	1	
6B		278758005	MOTOR ASSEMBLY	1	
6C		278758002	OUTPUT CABLE	1	
6D		278758004	CABLE ASSY. - ELECTRIC	1	
7		249888001	BOLT-M12X25 10.9 HHCS D933 ZNC	2	
8		238249001	WASHER - 12MM HARD Y/ ZINC	2	
9		251216001	PLATE-THROTTLE SOLENOID MOUNT	1	
10		235716001	WASHER-1/4 SAE HARD ZINC PLTD	2	
11		235733001	BOLT-1/4-20X1/2 GR8 ZINC PLTD	2	

https://truckmanualshub.com/

Wing Panel Assembly (10' Rack) Fig 5-19r01

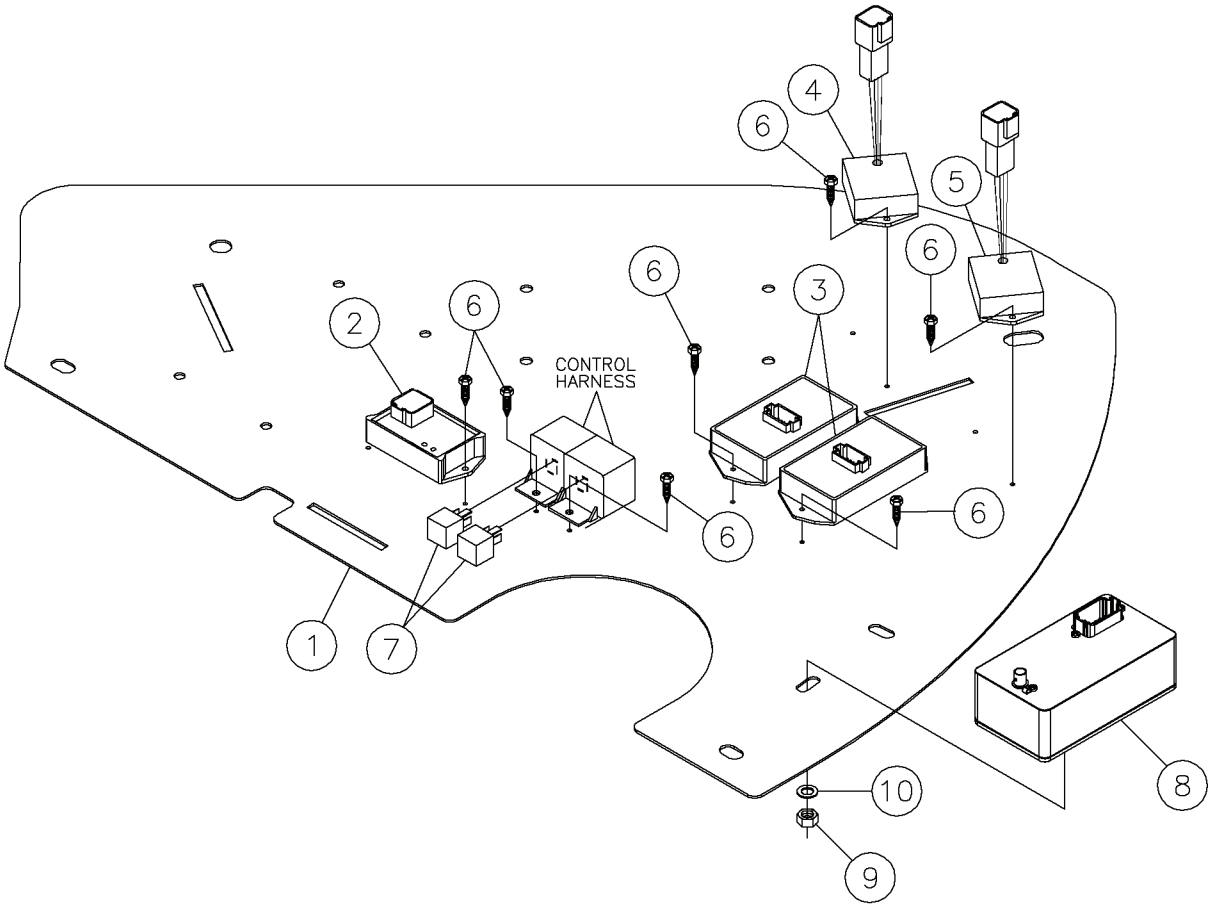

https://truckmanualshub.com/

Wing Panel Assembly (10' Rack) Fig 5-19r01

REF. NO.	*	PART NO.	DESCRIPTION	QTY.	REMARKS
		Revision Date	June, 2004		Update In Illustration & Parts List.
1		285565001	MOUNT - CONSOLE	1	
2		278952001	MODULE - PWM CONTROL	1	
3		296250551	MODULE - 10 DIODE INPUT	2	
4		251673001	ELECTRONIC MODULE-5SEC DLY RLY	1	
5		251972001	SONDE HOUSING	1	
6		255163001	SCREW-TCTAP-8-32X.38-GR2-CZ-HWH-SLTD	1	
7		251681001	RELAY - SEALED 40 AMP	2	
8		289502001	KIT - ZAP ALERT	1	
9		406001	NUT-5/16 NC HEX	2	
10		485005	WASHER-5/16 FLAT	2	

https://truckmanualshub.com/

Wing Panel Assembly (10' Rack) Fig 5-19

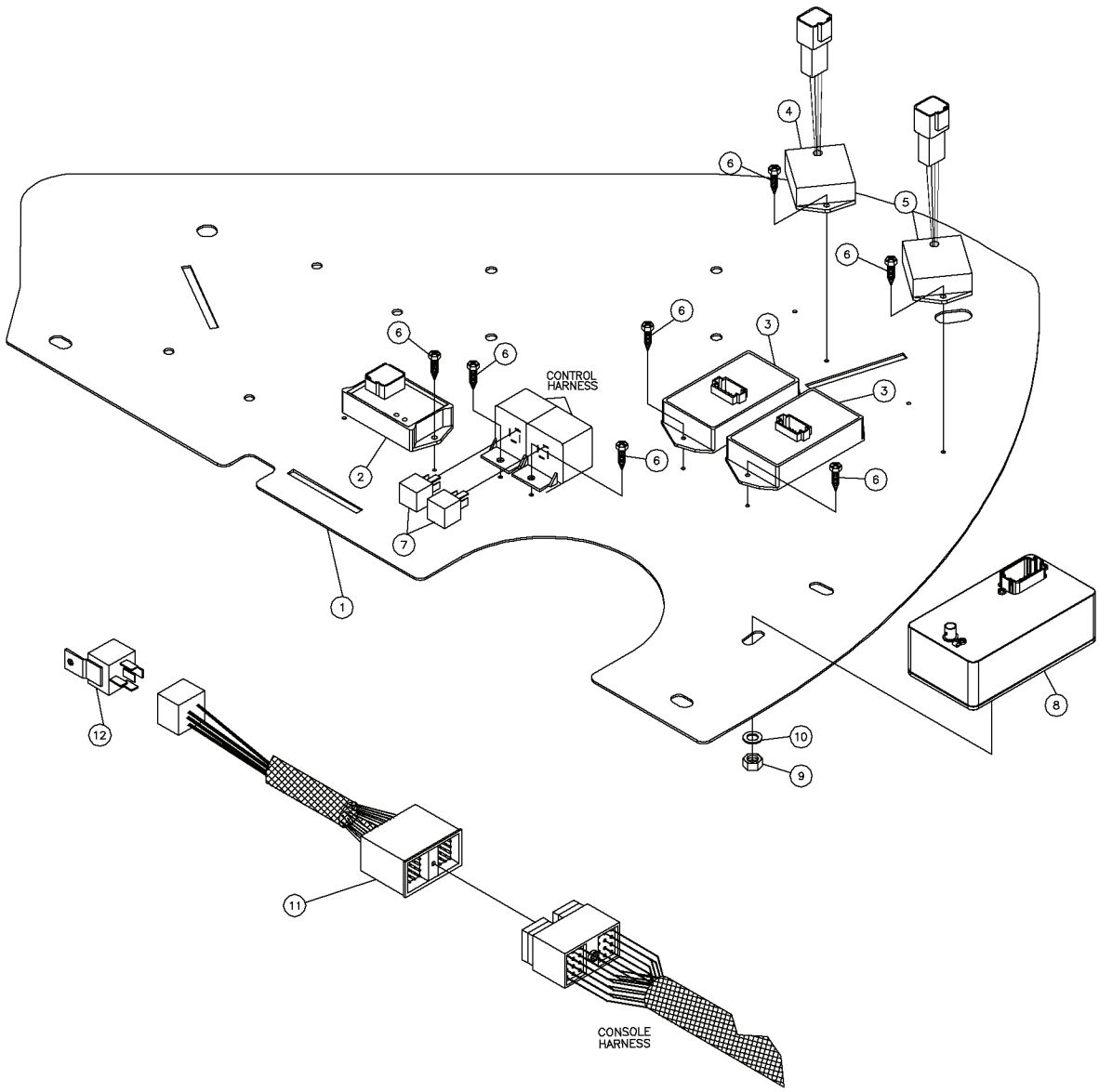

https://truckmanualshub.com/

Wing Panel Assembly (10' Rack) Fig 5-19

REF. NO.	*	PART NO.	DESCRIPTION	QTY.	REMARKS
1		285565001	MOUNT - CONSOLE	1	
2		278952001	MODULE - PWM CONTROL	1	
3		278857001	MODULE - 10 INPUT EXPANDER	2	
4		251673001	ELECTRONIC MODULE-5SEC DLY RLY	1	
5		251672001	ELECTRONICS MODULE-DSR CONTROL	1	
6		255163001	SCREW-TCTAP-8-32X.38-GR2-CZ-HWH-SLTD	1	
7		251681001	RELAY - SEALED 40 AMP	2	
8		289502001	KIT - ZAP ALERT	1	
9		406001	NUT-5/16 NC HEX	2	
10		485005	WASHER-5/16 FLAT	2	
11		296260259	HARNESS - REMOTE LOCKOUT JUMPER	1	

https://truckmanualshub.com/

Break Panel Assembly (10' Rack) Fig 5-20r01

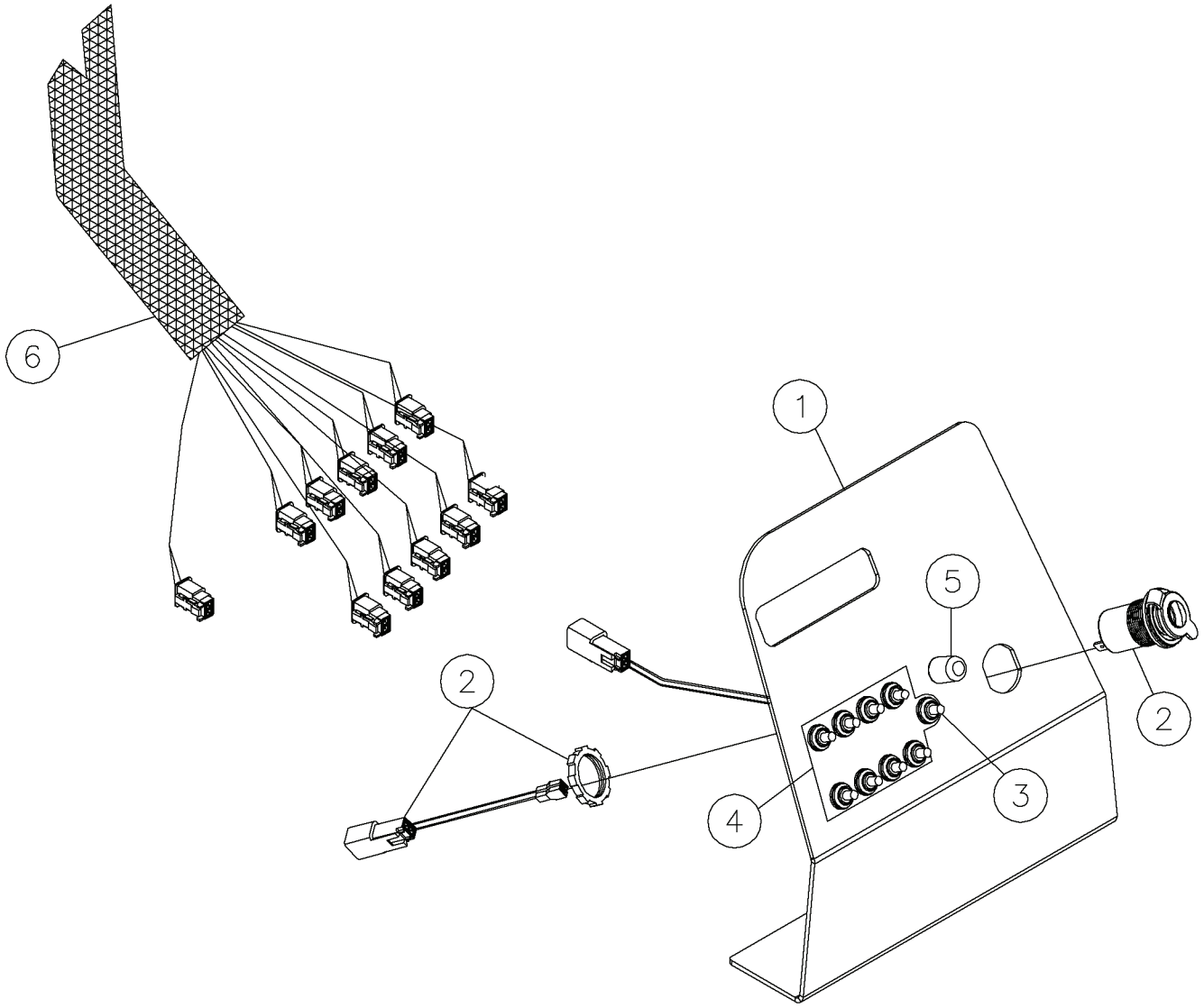

https://truckmanualshub.com/

Break Panel Assembly (10' Rack) Fig 5-20r01

REF. NO.	*	PART NO.	DESCRIPTION	QTY.	REMARKS
		Revision Date	June, 2004		Update In Illustration & Parts List.
1		277645001	BAFFLE WELDMENT	1	
2		154677001	OUTLET - 12 VOLT	1	
3		72081001	BREAKER 2-5700-514 DD 15 AMP	9	
4		700IB710	DECAL - FUSE CONTROLS	1	
5		89597001	COVER-BREAKER SWITCH	9	
6		287722001	HARNESS - CIRCUIT BREAKER PANEL	1	

https://truckmanualshub.com/

Break Panel Assembly (10' Rack) Fig 5-20

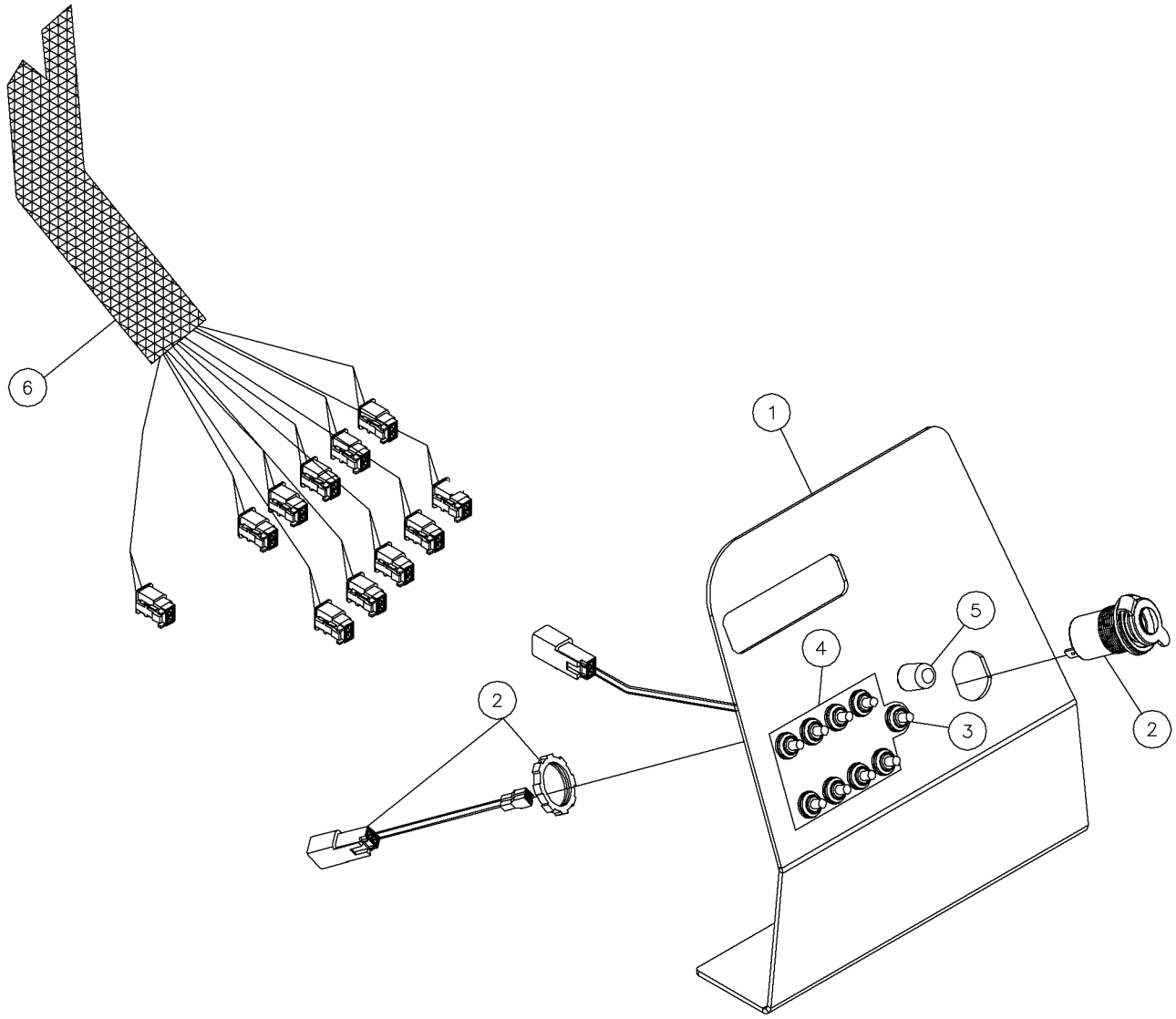

https://truckmanualshub.com/

Break Panel Assembly (10' Rack) Fig 5-20

REF. NO.	*	PART NO.	DESCRIPTION	QTY.	REMARKS
1		277645001	BAFFLE WELDMENT	1	
2		285604001	OUTLET - 12 VOLT	1	
3		72081001	BREAKER 45-700-514-DD 15 AMP	9	
4			DECAL - BREAKER PANEL	1	
5		89597001	COVER-BREAKER SWITCH	9	
6		287722001	HARNESS - CIRCUIT BREAKER PANEL	1	

https://truckmanualshub.com/

Battery Assembly Fig 5-21r01

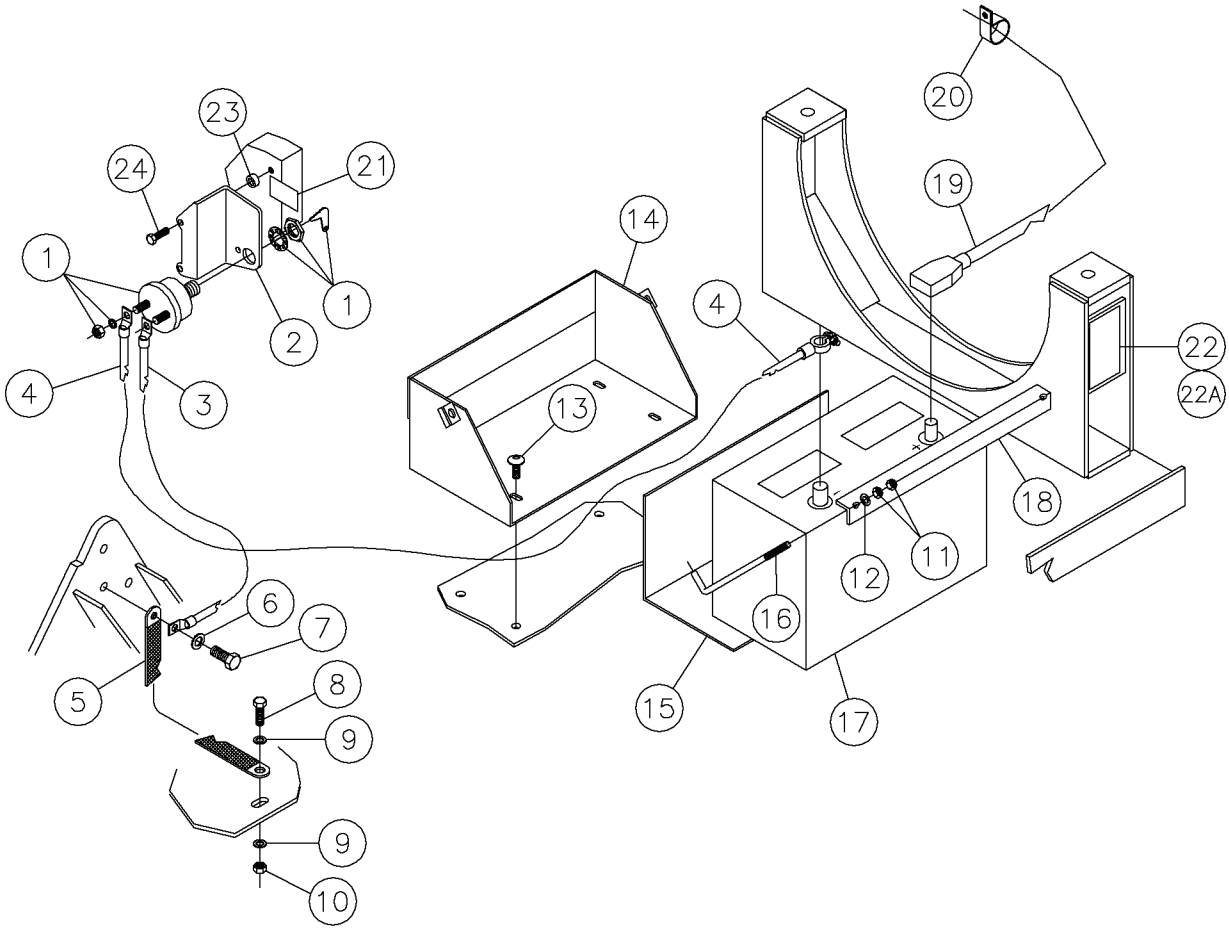

https://truckmanualshub.com/

Battery Assembly Fig 5-21r01

REF. NO.	*	PART NO.	DESCRIPTION	QTY.	REMARKS
		Revision Date	July, 2004		Update In Parts List.
1		904365001	DISCONNECT SWITCH		
2		251404001	MOUNT-SWITCH	1	
3		228400001	CABLE-BATT. 2/0 GA.X15”E-E BLK	1	
4		3262027	BATT.CABLE 2/0GA. 16 N-E BL	1	
		296272021	CABLE - BATTERY GROUND - 55”	1	
5		218260001	STRAP-4GA.X18”E-E BRAIDED GRND	1	
6		238249001	12MM HARD WASHER Y/ ZINC	1	
7		250516001	BOLT - 12M X 35M Gr8 Y/ZINC	1	
8		235736001	BOLT-3/8-16X1 1/4 ZINC PLTD	1	
9		235713001	WASHER - FLATSTRL - .38 - .41 X .81 - .06-YA-A325	2	
10		235725001	NUT - HEX - .38 - 16 - GR8 - YZ	1	
11		235741001	NUT - HEX - .31 - 18 - GR8 -YZ	2	
12		235714001	WASHER - FLATSTRL - .31 - .34 X .69 - .06-YZ-A325	2	
13		504918001	BOLT-5/16 NC X 1 BUTT HD GR 5	4	
14		277043001	BOX - BATTERY	1	
15		277044001	PAD - RUBBER	1	
16		240880001	BOLT-BATTERY ANCHOR	2	
17		N/A	BATTERY	1	
18		214360001	HOLDDOWN-BATTERY	1	
19		245015001	BATT CABLE-2/10 3/8 9OD 48P-ER	1	
20		2595007	HOSE CLAMP - TS7J 3/4”	1	
21		700IA477	DECAL_BATTERY SWITCH (UG)	1	
22		70000044	DECAL-WARNING(AT/UND)	1	DOMESTIC
22A		7000I044	DECAL-WARNING	1	INTERNATIONAL
23		244963001	TUBE-SPACER	2	
24		119512001	BOLT-M8 X 1.25-25MM HEX HEAD	2	

https://truckmanualshub.com/

Battery Assembly Fig 5-21

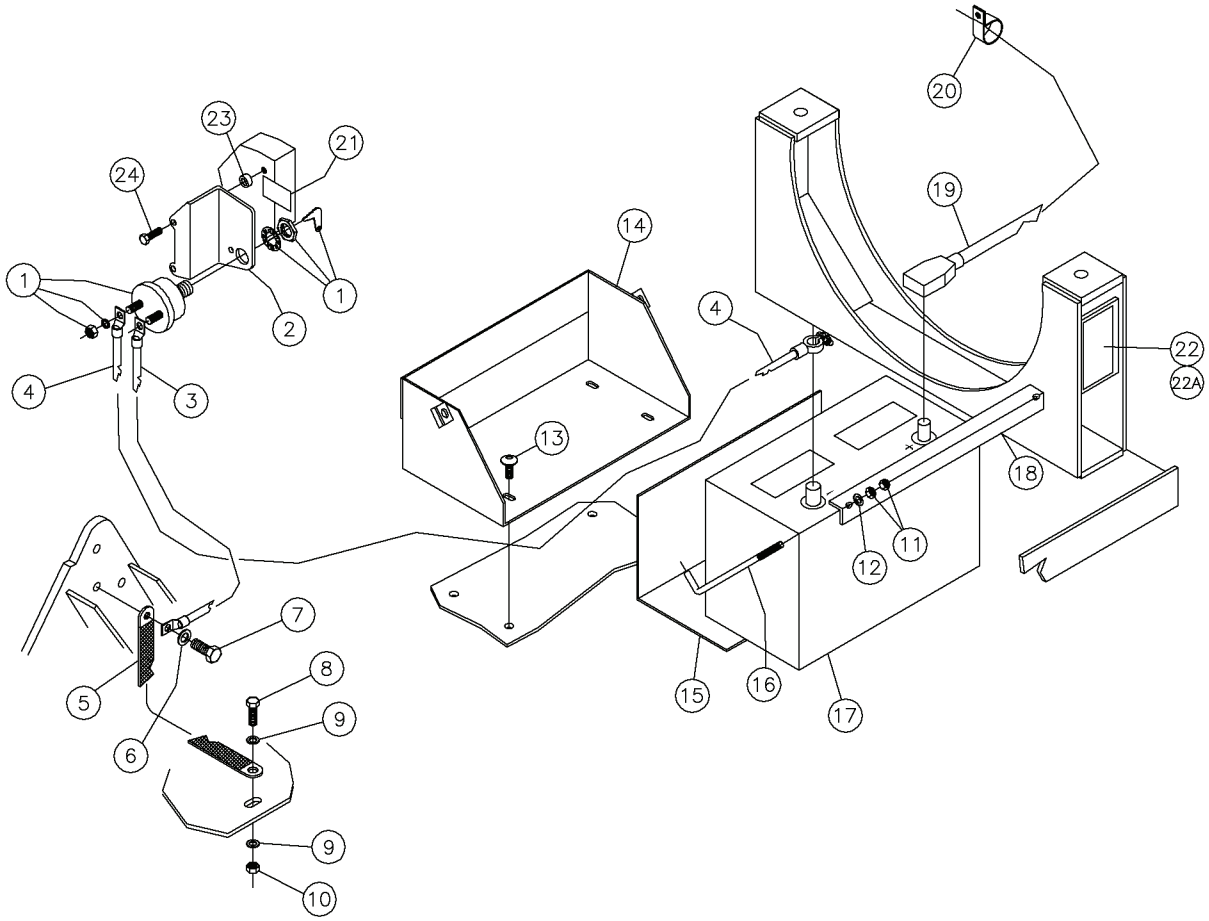

https://truckmanualshub.com/

Battery Assembly Fig 5-21

REF. NO.	*	PART NO.	DESCRIPTION	QTY.	REMARKS
1		904365001	DISCONNECT SWITCH	1	
2		251404001	MOUNT-SWITCH	1	
3		228400001	CABLE-BATT. 2/0 GA.X15”E-E BLK	1	
4		3262027	BATT.CABLE 2/0GA. 16 N-E BL	1	
5		218260001	STRAP-4GA.X18”E-E BRAIDED GRND	1	
6		238249001	WASHER - 12MM HARD Y/ ZINC	1	
7		250516001	BOLT - 12M X 35M GR8 Y/ZINC	1	
8		235736001	BOLT-3/8-16X1 1/4 ZINC PLTD	1	
9		235713001	WASHER-3/8 SAE HARD ZINC PLTD	2	
10		235725001	NUT-3/8-16 GR8 ZINC PLTD	1	
11		235741001	NUT-5/16-18 GR8 ZINC PLTD	2	
12		235714001	WASHER-5/16 SAE HARD ZINC PLTD	2	
13		504918001	BOLT-5/16 NC X 1 BUTT HD GR 5	4	
14		277043001	BOX - BATTERY	1	
15		277044001	PAD - RUBBER	1	
16		240880001	BOLT-BATTERY ANCHOR	2	
17		N/A	BATTERY	1	
18		214360001	HOLDDOWN-BATTERY	1	
19		245015001	BATT CABLE-2/10 3/8 9OD 48P-ER	1	
20		2595007	HOSE CLAMP - TS7J 3/4”	1	
21		700IA477	DECAL_BATTERY SWITCH (UG)	1	
22		70000044	DECAL-WARNING(AT/UND)	1	DOM.
22A		7000I044	DECAL-WARNING	1	INTL.
23		244963001	TUBE-SPACER	2	
24		119512001	BOLT-M8 X 1.25-25MM HEX HEAD	2	

https://truckmanualshub.com/

Engine Electrical Panel Assembly Fig 5-22

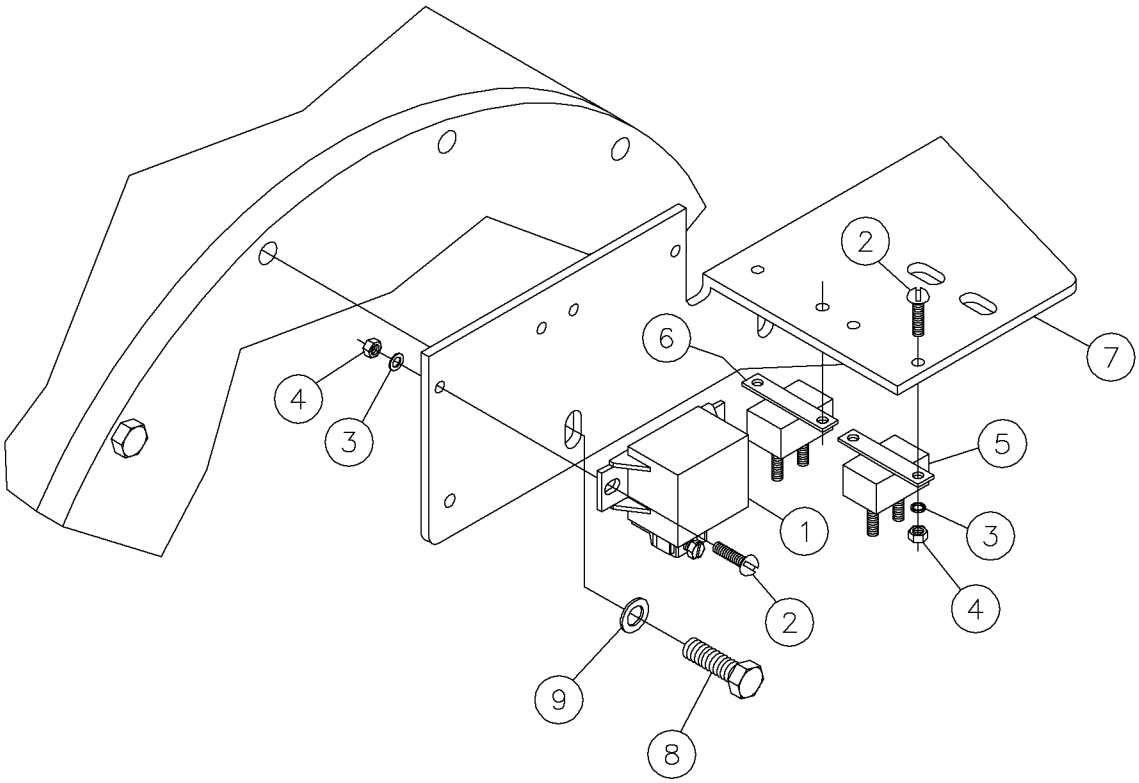

https://truckmanualshub.com/

Engine Electrical Panel Assembly Fig 5-22

REF. NO.	*	PART NO.	DESCRIPTION	QTY.	REMARKS
1		86217001	RELAY-BOSCH SPST 75 AMP SEALED	2	
2		1802006	BOLT-10-24 X 3/4 RND HD STOVE	4	
3		480001	WASHER-3/16 S/T LOCK	8	
4		99042001	NUT-10-24 NYLON INSERT LOCK	8	
5		64075001	BREAKER-RAMCO 12A30A2-0001	1	
6		21285001	BREAKER-RAMCO 12A15A0 15AMP	1	
7		278935001	PLATE-TOURQUE LIMITER MOUNT	1	
8		249891001	BOLT-M10X35 10.9 HHCS D933 ZNC	3	
9		141350001	WASHER-M10 HARDEN PLATED FLAT	3	

https://truckmanualshub.com/

Work Light Assembly Fig 5-23

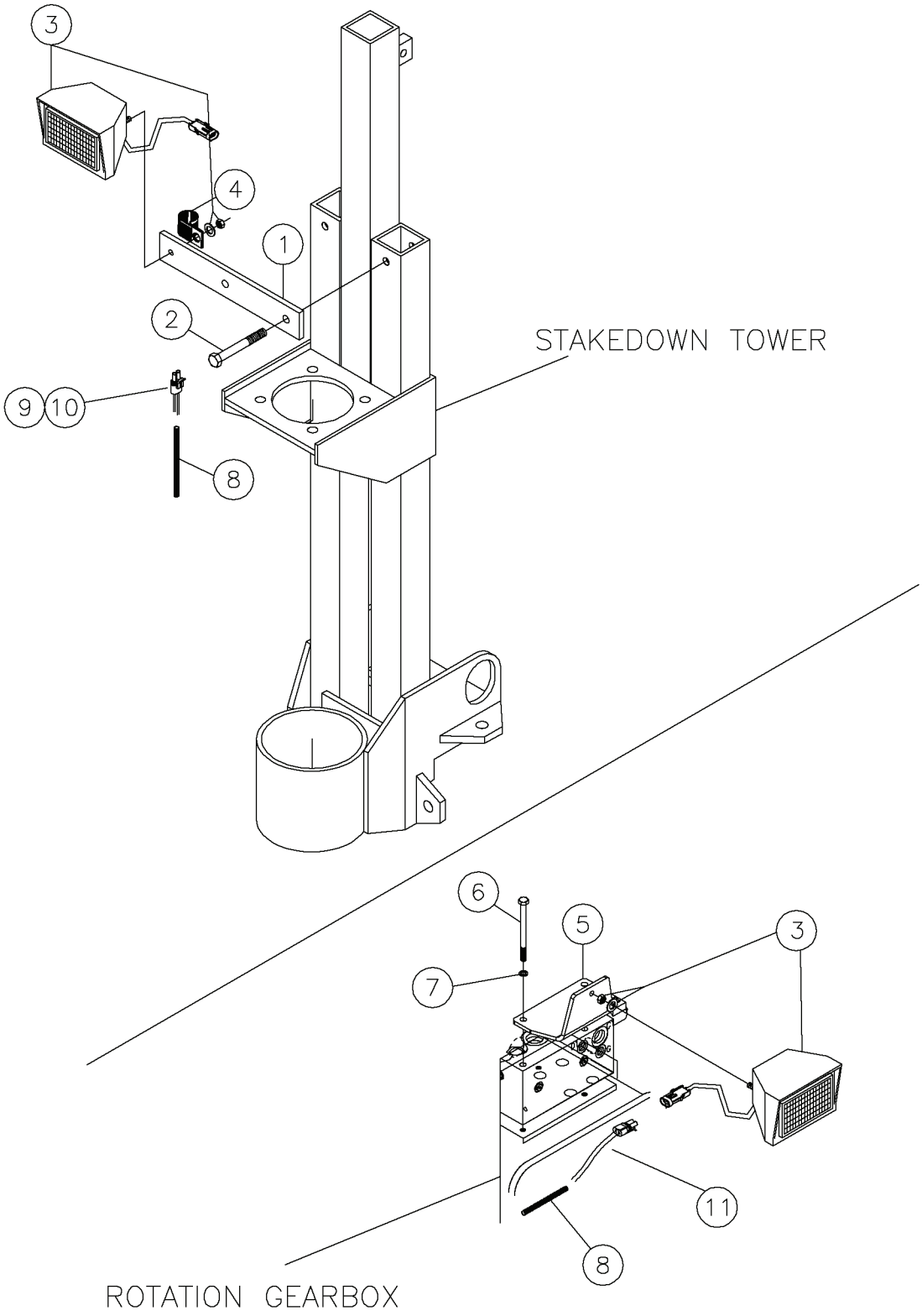

https://truckmanualshub.com/

Work Light Assembly Fig 5-23

REF. NO.	*	PART NO.	DESCRIPTION	QTY.	REMARKS
1		279150001	BAR-LIGHT REINFORCEMENT	2	
2		238244001	BOLT 1/2”-13 X 4”GR8 HEX Y/ZIN	4	
3		245006001	ASSEMBLY-3X5 FLOOD LIGHT	3	
4		2595009	CLAMP-1 1/4 HOSE #7701164	2	
5		279148001	PLATE - MOUNT	1	
6		250523001	BOLT-5/16-18 X 4 1/2 GR8 HEX Y	2	
7		235714001	WASHER-5/16 SAE HARD ZINC PLTD	2	
8		86318001	LOOM-FLEX GARD HI TEMP 1/4 ID	A/R	
9		277733001	HARNESS - FRONT RACK	1	(15’ RACK)
10		294633001	HARNESS - FRONT RACK	1	(10’ RACK)
11		277739001	HARNESS - CARRIAGE	1	

https://truckmanualshub.com/

Auto Rod Loader Sequencer Assembly (15' Rack) Fig 5-24

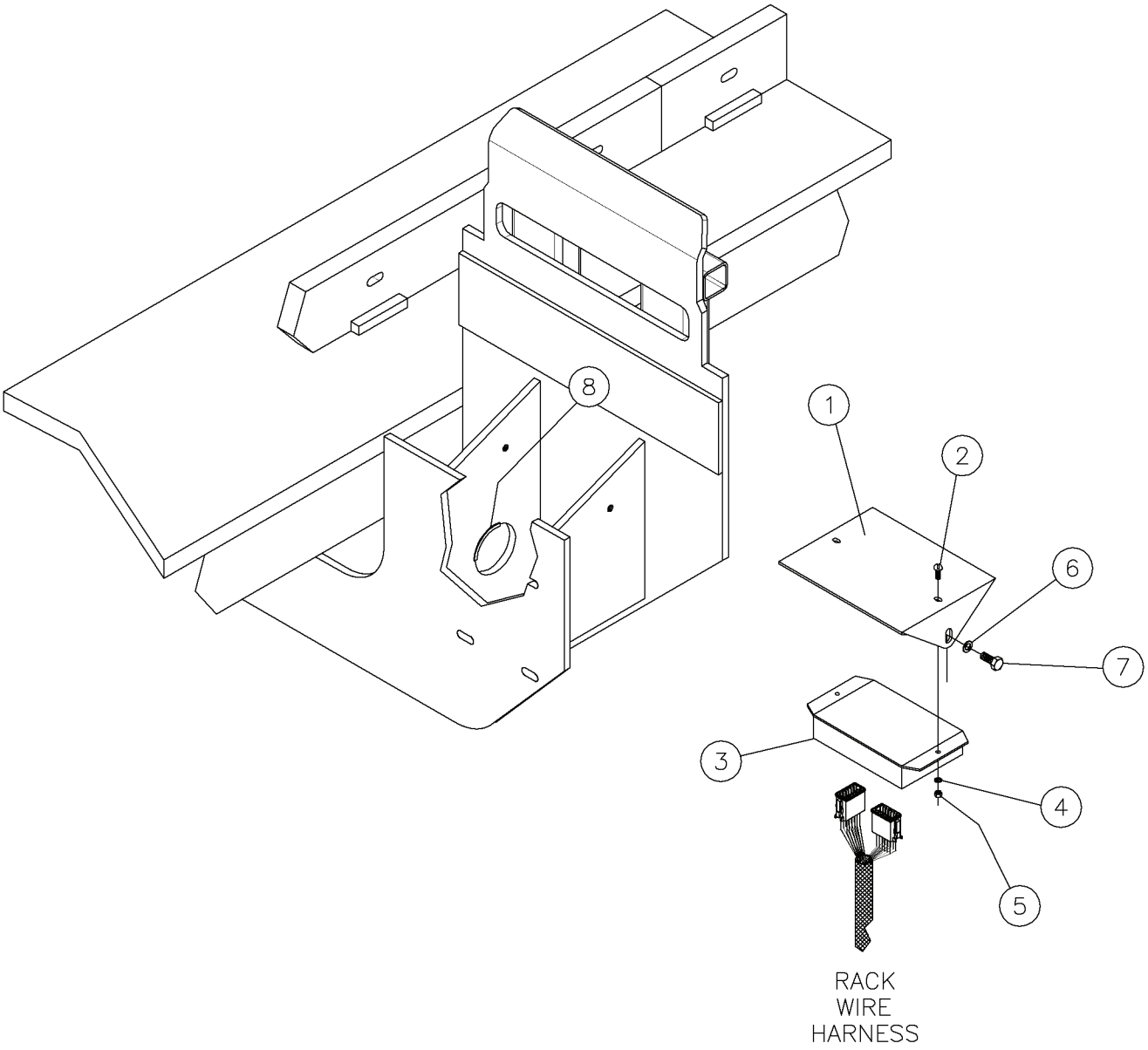

https://truckmanualshub.com/

Auto Rod Loader Sequencer Assembly (15' Rack) Fig 5-24

REF. NO.	*	PART NO.	DESCRIPTION	QTY.	REMARKS
1		285517001	BRACKET - MODULE MOUNT	1	
2		1802004	BOLT-3/16”NF X 1/2” STOVE	2	
3		278656001	I/O MODULE FOR AUTO ROD LOADER/ SEQUENCER	1	
4		485001	WASHER-3/16 FLAT	2	
5		26692001	NUT-10-32 NF HEX	2	
6		235714001	WASHER-5/16 SAE HARD ZINC PLTD	2	
7		235742001	BOLT-5/16-18X3/4 GR8 ZINC PLTD	2	
8		278773001	SEAL - EDGE 3/8” STYLE	A/R	(SPECIFY LENGTH)

https://truckmanualshub.com/

Autoloader - Electrical Assembly (10' Rack) Fig 5-25r01

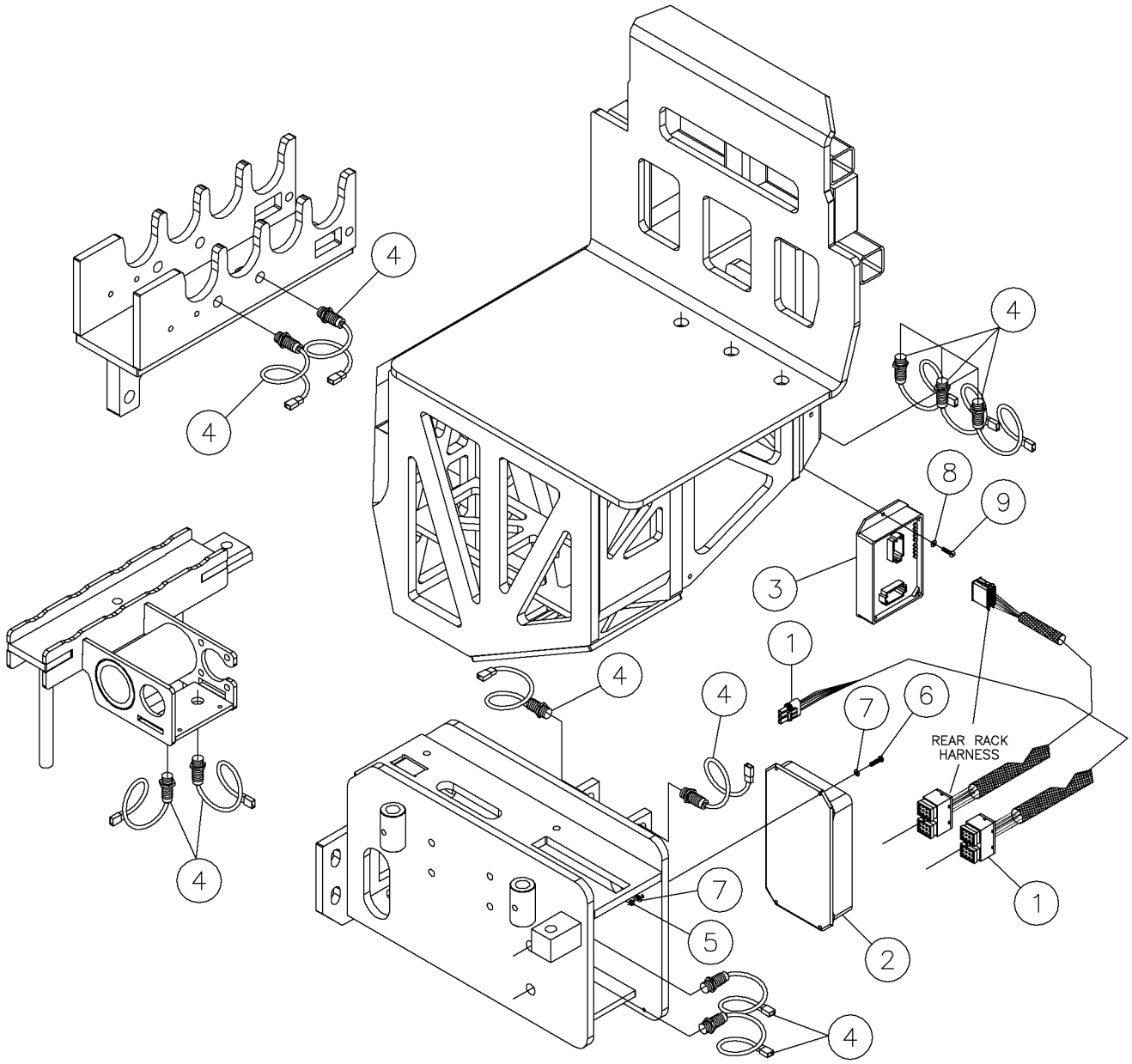

https://truckmanualshub.com/

Autoloader - Electrical Assembly (10' Rack) Fig 5-25r01

REF. NO.	*	PART NO.	DESCRIPTION	QTY.	REMARKS
		Revision Date	July, 2004		Update In Illustration & Parts List.
1		294634001	HARNESS - ROD LOADER	1	
2		291623001	MODULE - AUTO ROD LOADER	1	
3		278956001	FITTING - 12 MOR X 16 MFFOR 90 DEG	1	
4		276442001	SWITCH - PROX 18 MM NO/SUB TO 296276341	17	
5		99042001	NUT - NYLOCK - 10 - 24 - GR2 - CZ	4	
6		1802010	BOLT - 3/16” X 1” NC STOVE	4	
7		485001	WASHER - FLATSTD - .19 - .22 X .56 - .05 - CZ	8	
8		224769001	WASHER-#8 FLAT	2	
9		10530006	SCREW-#8-32X3/4 SLOT RD.HD.	2	

https://truckmanualshub.com/

Autoloader - Electrical Assembly (10' Rack) Fig 5-25

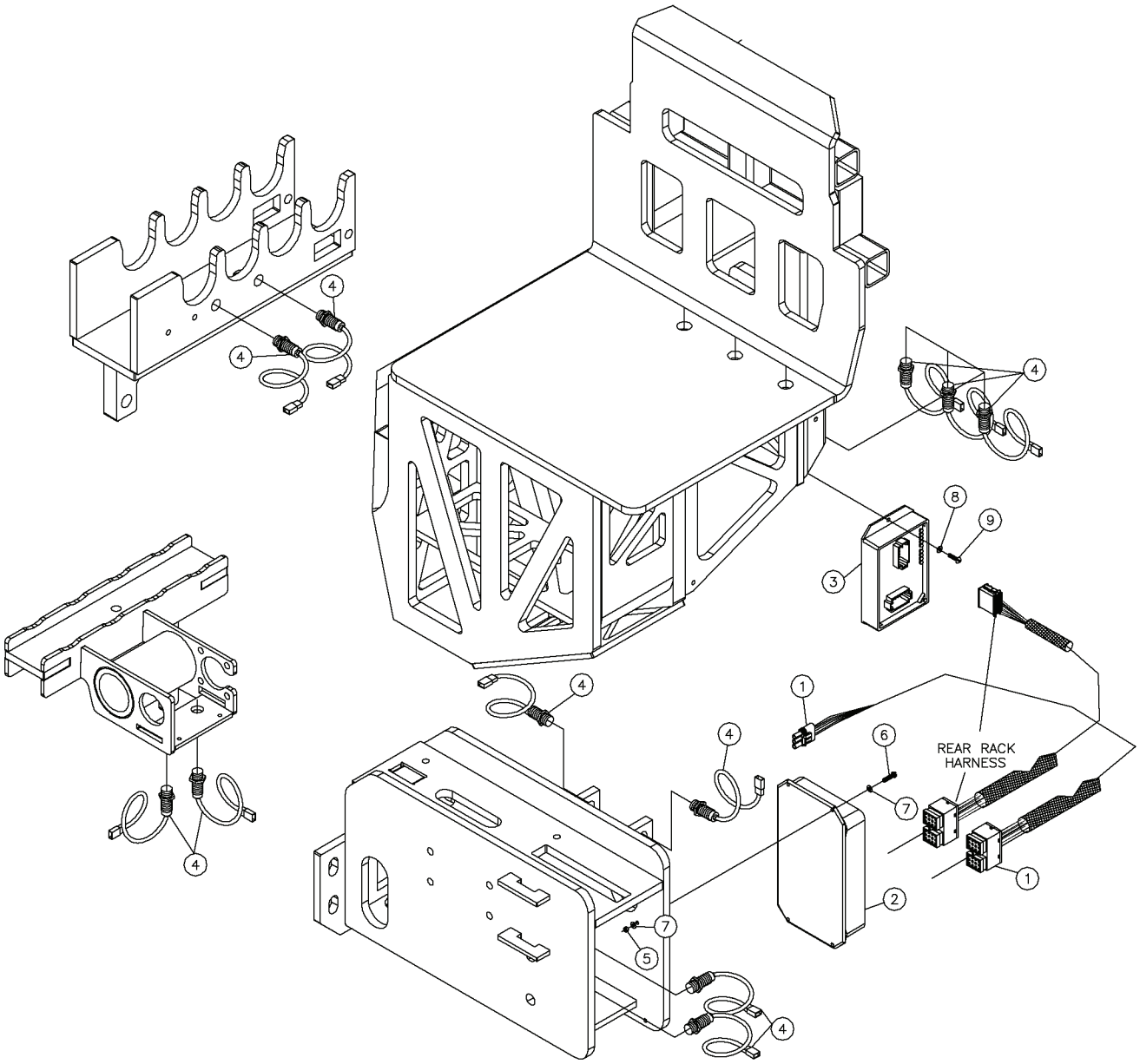

https://truckmanualshub.com/

Autoloader - Electrical Assembly (10' Rack) Fig 5-25

REF. NO.	*	PART NO.	DESCRIPTION	QTY.	REMARKS
1		294634001	HARNESS - ROD LOADER	1	
2		291623001	MODULE - ATUO ROD LOADER	1	
3		278656001	I/O MODULE FOR AUTO ROD LOADER/ SEQUENCER	1	
4		276442001	SWITCH - PROXIMITY 18 MM NO	14	
5		99042001	NUT-10-24 NYLON INSERT LOCK	4	
6		1802010	BOLT - 3/16” X 1” NC STOVE	4	
7		485001	WASHER-3/16 FLAT	8	
8		224769001	WASHER-#8 FLAT	2	
9		10530006	SCREW-#8-32X3/4 SLOT RD.HD.	2	

https://truckmanualshub.com/

Auto Greaser Electrical Control Assembly Fig 5-26r01

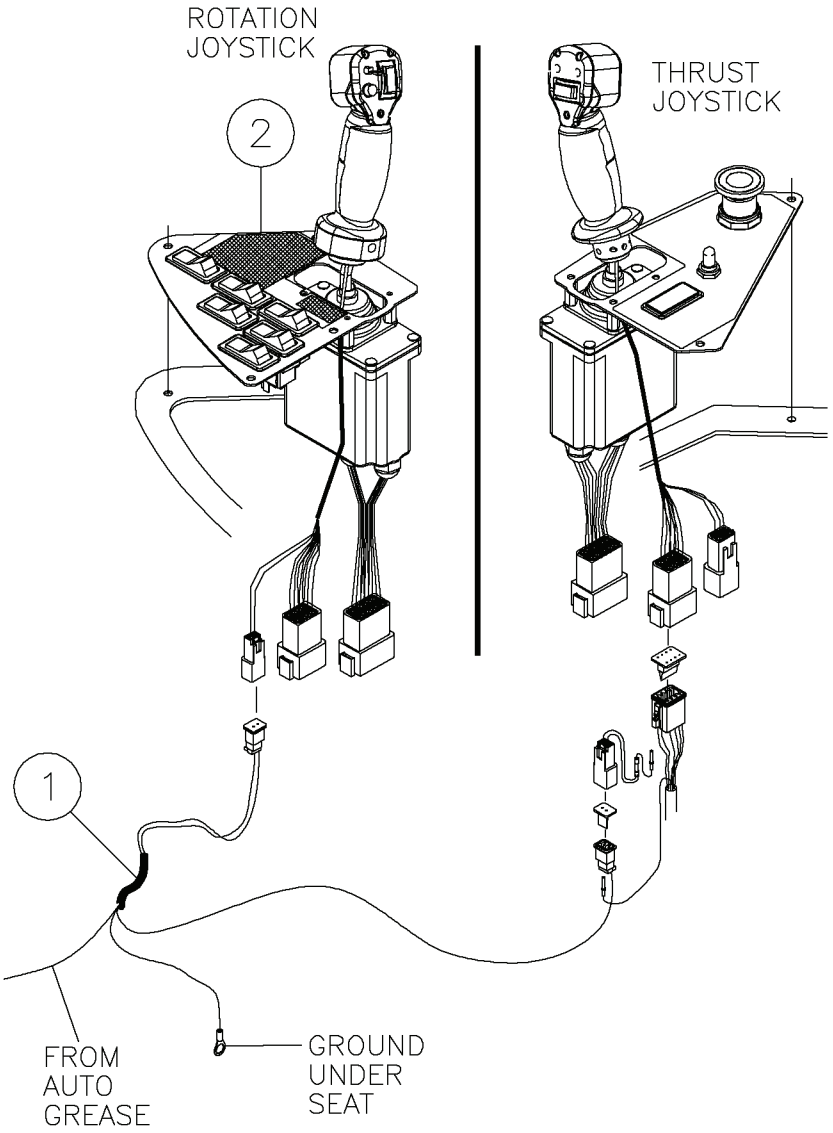

https://truckmanualshub.com/

Auto Greaser Electrical Control Assembly Fig 5-26r01

REF. NO.	*	PART NO.	DESCRIPTION	QTY.	REMARKS
		Revision Date	June, 2004		Update In Illustration & Parts List.
1		296265781	HARNESS - WIRE D33X44 GREASER		
2		700IB913	DECAL - CONTROLS		

https://truckmanualshub.com/

Auto Greaser Electrical Control Assembly Fig 5-26

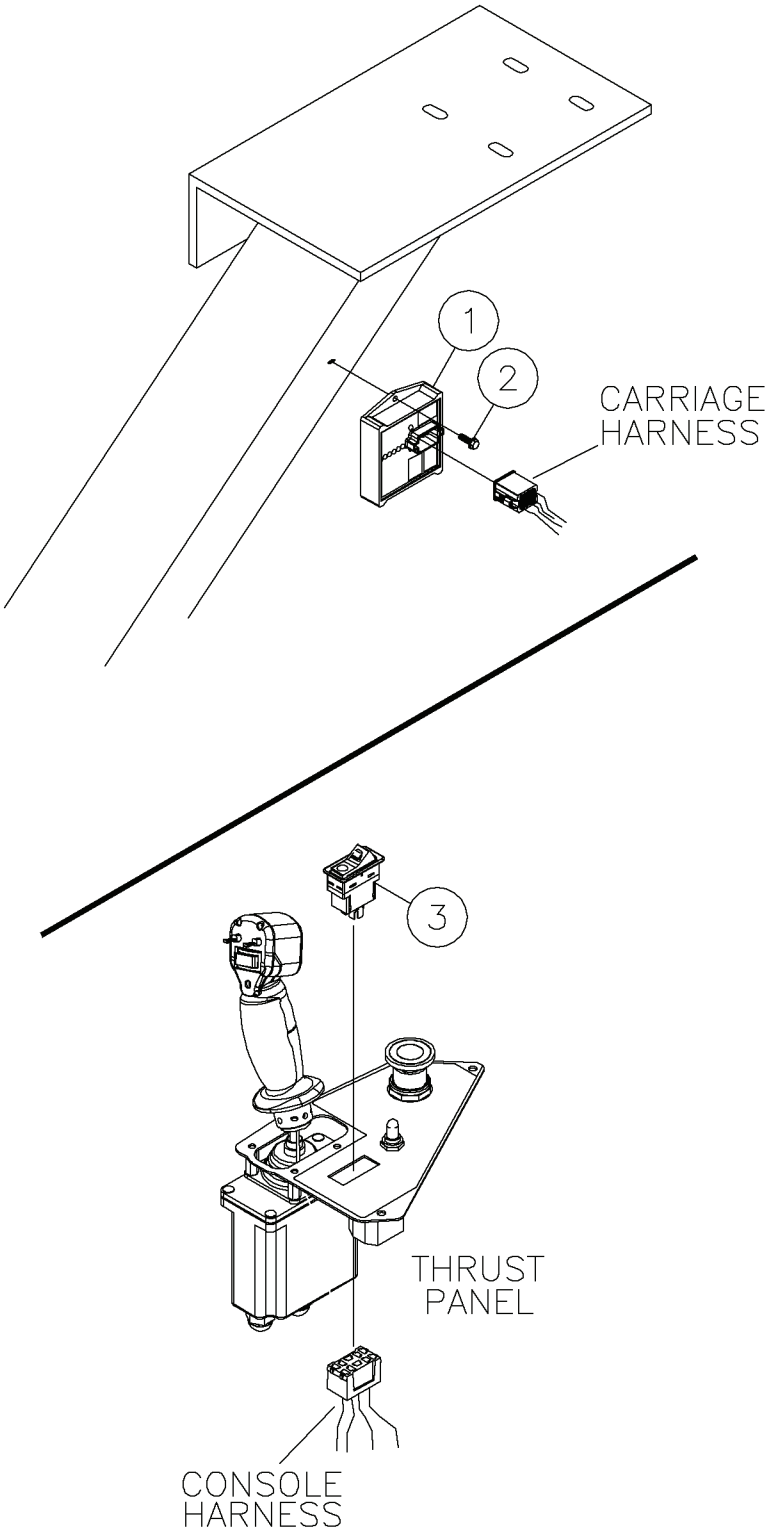

https://truckmanualshub.com/

Auto Greaser Electrical Control Assembly Fig 5-26

REF. NO.	*	PART NO.	DESCRIPTION	QTY.	REMARKS
1		291537001	MODULE - AUTO GREASE	1	
2		233502001	SCREW- #10-24X5/8 PHILLIPS PAN	2	
3		277737001	SWITCH - ROCKER AUTO-GREASER	1	

https://truckmanualshub.com/

Miscellaneous Supplies Fig 5-27

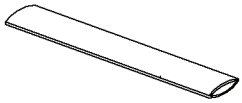

HEAT SHRINK TUBE

INSIDE DIAMETER	PART NUMBER
.187	83097001
.375	89675001
.75	291595001
1.1	208312001
1.5	124653001
1.5 RED	215936001
2.0	291593001
3.5	124652001

https://truckmanualshub.com/

Miscellaneous Supplies Fig 5-27

REF. NO.	*	PART NO.	DESCRIPTION	QTY.	REMARKS

https://truckmanualshub.com/

DRC Series Connectors Fig 5-28

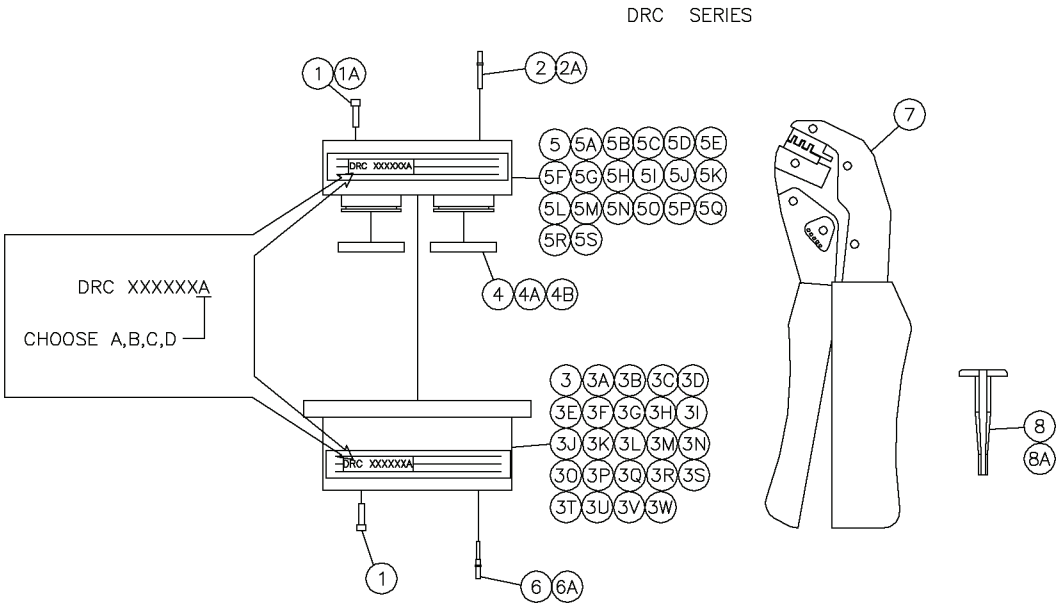

https://truckmanualshub.com/

DRC Series Connectors Fig 5-28

REF. NO.	*	PART NO.	DESCRIPTION	QTY.	REMARKS
1		276906001	PLUG - SEALING (20)		
1A		94201001	PLUG - SEALING (12-16)		
2		91354001	SOCKET - 16/18 GA.		
2A		276916001	SOCKET - 20 GA.		
3		276894001	RECEPTACLE - 24 PIN INLINE (A)		
3A		276907001	RECEPTACLE - 24 PIN INLINE (B)		
3B		276917001	RECEPTACLE - 24 PIN INLINE (C)		
3C		276918001	RECEPTACLE - 24 PIN INLINE (D)		
3D		276895001	RECEPTACLE - 24 IN FLNG MNT (A)		
3E		276908001	RECEPTACLE - 24 PIN FLNG MNT (B)		
3F		276919001	RECEPTACLE - 24 PIN FLNG MNT (C)		
3G		276920001	RECEPTACLE - 24 PIN FLNG MNT (D)		
3H		276896001	RECEPTACLE - 40 PIN INLINE (A)		
3I		276909001	RECEPTACLE - 40 PIN INLINE (B)		
3J		276921001	RECEPTACLE - 40 PIN INLINE (C)		
3K		276922001	RECEPTACLE - 40 PIN INLINE (D)		
3L		276897001	RECEPTACLE - 40 PIN FLNG MNT (A)		
3M		276910001	RECEPTACLE - 40 PIN FLNG MNT (B)		
3N		276923001	RECEPTACLE - 40 PIN FLNG MNT (C)		
3O		276924001	RECEPTACLE - 40 PIN FLNG MNT (D)		
3P		276898001	RECEPTACLE - 70 PIN INLINE (A)		
3Q		276911001	RECEPTACLE - 70 PIN INLINE (B)		
3R		276925001	RECEPTACLE - 70 PIN INLINE (C)		
3S		276926001	RECEPTACLE - 70 PIN INLINE (D)		
3T		276899001	RECEPTACLE - 70 PIN FLNG MNT (A)		
3U		276912001	RECEPTACLE - 70 PIN FLNG MNT (B)		
3V		276927001	RECEPTACLE - 70 PIN FLNG MNT (C)		
3W		276928001	RECEPTACLE - 70 PIN FLNG MNT (D)		
			Continued On Next Page		

https://truckmanualshub.com/

DRC Series Connectors Fig 5-28

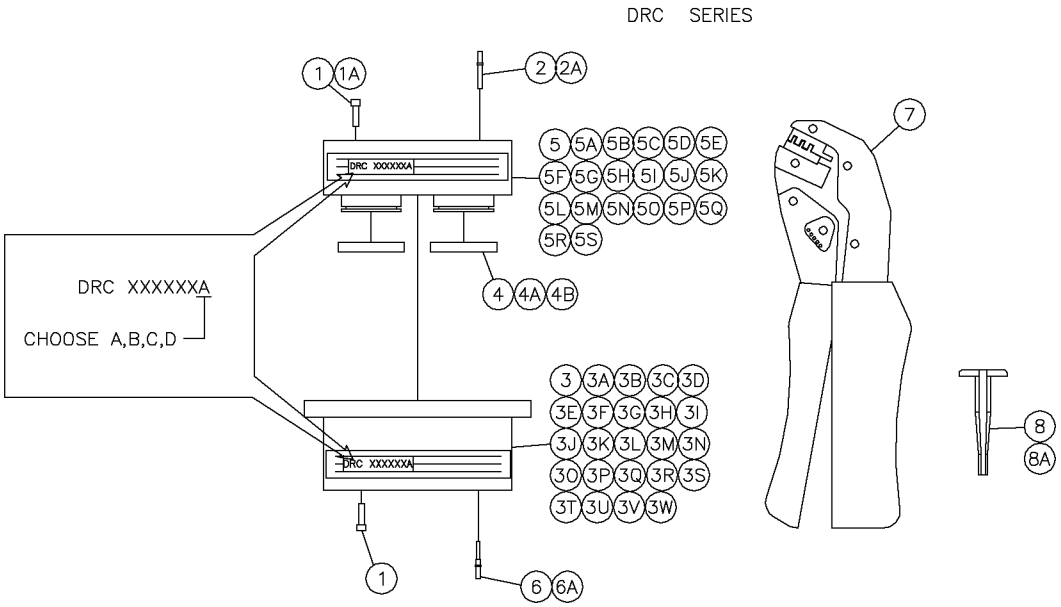

https://truckmanualshub.com/

DRC Series Connectors Fig 5-28

REF. NO.	*	PART NO.	DESCRIPTION	QTY.	REMARKS
4		276900001	GASKET - 24 PIN INTERFACE		
4A		276901001	GASKET - 40 PIN INTERFACE		
4B		276902001	GASKET - 70 PIN INTERFACE		
5		276931001	PLUG - 24 PIN (SIZE 20 CONTACTS) (A)		
5A		276932001	PLUG - 24 PIN (SIZE 20 CONTACTS)		
5B		276933001	PLUG - 24 PIN (SIZE 20 CONTACTS) (C)		
5C		276934001	PLUG - 24 PIN (SIZE 20 CONTACTS) (D)		
5D		276939001	PLUG - 40 PIN (SIZE 20 CONTACTS) (A)		
5E		276940001	PLUG - 40 PIN (SIZE 20 CONTACTS) (B)		
5F		276941001	PLUG - 40 PIN (SIZE 20 CONTACTS) (C)		
5G		276942001	PLUG - 40 PIN (SIZE 20 CONTACTS) (D)		
5H		276903001	PLUG - 24 PIN (A)		
5I		276913001	PLUG - 24 PIN (B)		
5J		276929001	PLUG - 24 PIN (C)		
5K		276930001	PLUG - 24 PIN (D)		
5L		276904001	PLUG - 40 PIN (A)		
5M		276914001	PLUG - 40 PIN (B)		
5N		276935001	PLUG - 40 PIN (C)		
5O		276936001	PLUG - 40 PIN (D)		
5P		276905001	PLUG - 70 PIN (A)		
5Q		276915001	PLUG - 70 PIN (B)		
5R		276937001	PLUG - 70 PIN (C)		
5S		276938001	PLUG - 70 PIN (D)		
6		276866001	PIN - 14/16 GA.		
6A		87696001	PIN-16/18 GA.		
7		286553001	TOOL - DEUTSCH CRIMPING (FIELD)		
8		276892001	TOOL - 16/18 GA. EXTRACTOR (BLUE)		
8A		276893001	TOOL - 20/24 GA. EXTRACTOR (RED)		

https://truckmanualshub.com/

DT Series Connectors Fig 5-29

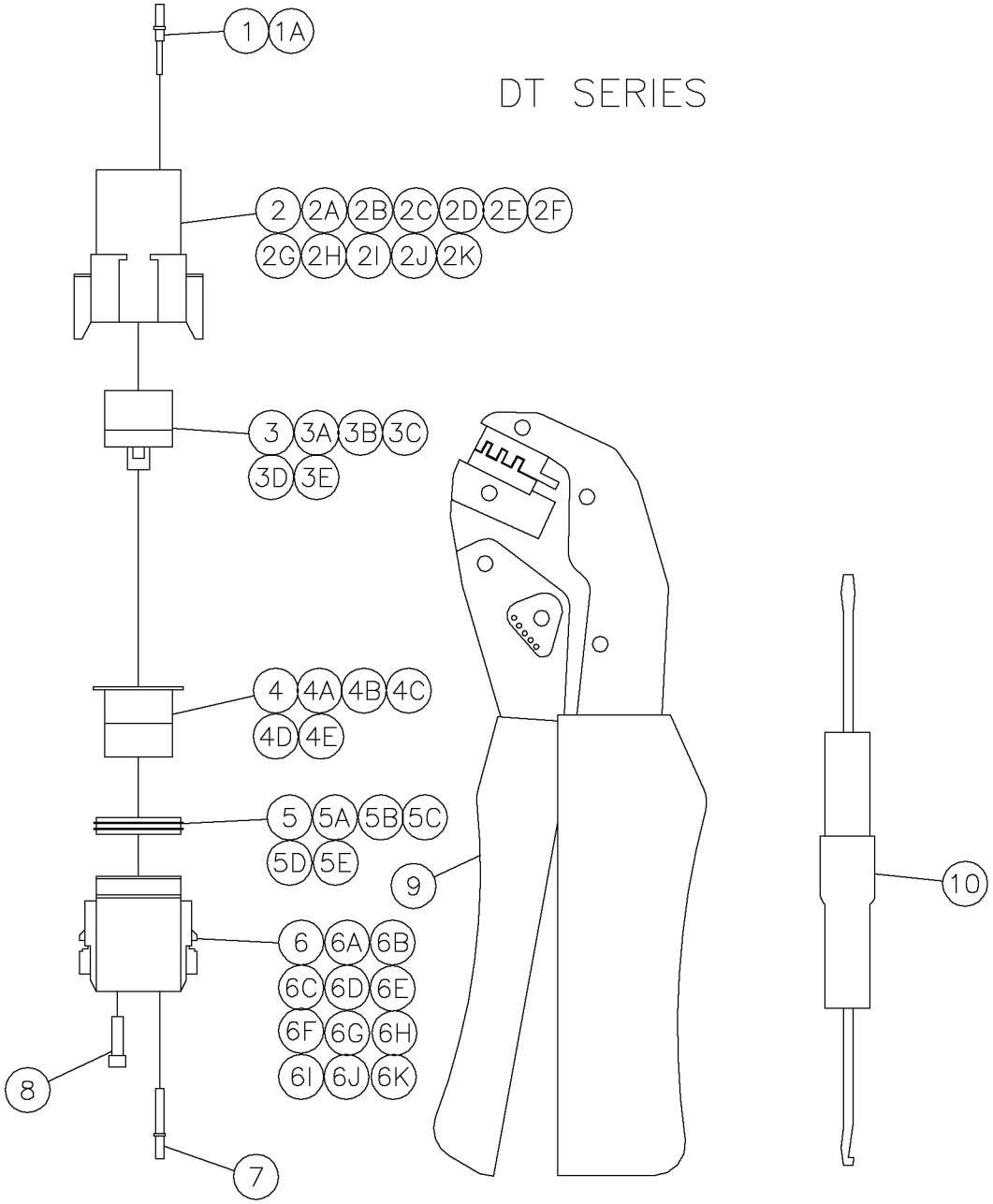

https://truckmanualshub.com/

DT Series Connectors Fig 5-29

REF. NO.	*	PART NO.	DESCRIPTION	QTY.	REMARKS
1		276866001	PIN - 14/16 GA.		
1A		87696001	PIN-16/18 GA.		
2		276867001	RECEPTACLE - 2 PIN		
2A		276868001	RECEPTACLE - 3 PIN		
2B		276869001	RECEPTACLE - 4 PIN		
2C		276890001	RECEPTACLE - 6 PIN		
2D		276943001	RECEPTACLE - 8 PIN (A)		
2E		276944001	RECEPTACLE - 8 PIN (B)		
2F		276945001	RECEPTACLE - 8 PIN (C)		
2G		276946001	RECEPTACLE - 8 PIN (D)		
2H		276947001	RECEPTACLE - 12 PIN (A)		
2I		276948001	RECEPTACLE - 12 PIN (B)		
2J		276949001	RECEPTACLE - 12 PIN (C)		
2K		276950001	RECEPTACLE - 12 PIN (D)		
3		276870001	WEDGE - 2 PIN RECEPTACLE		
3A		276871001	WEDGE - 3 PIN RECEPTACLE		
3B		276872001	WEDGE - 4 PIN RECEPTACLE		
3C		276873001	WEDGE - 6 PIN RECEPTACLE		
3D		94200001	WEDGE - 8 PIN RECEPTACLE		
3E		103213001	WEDGE - 12 PIN RECEPTACLE		
4		276874001	WEDGE - 2 PIN PLUG		
4A		276875001	WEDGE - 3 PIN PLUG		
4B		276876001	WEDGE - 4 PIN PLUG		
4C		276877001	WEDGE - 6 PIN PLUG		
4D		98106001	WEDGE - 8 PIN PLUG		
4E		103214001	WEDGE - 12 PIN PLUG		
5		276878001	GASKET - INTERFACE 2 PIN		
5A		276879001	GASKET - INTERFACE 3 PIN		
5B		276880001	GASLET - INTERFACE 4 PIN		
5C		276881001	GASKET - INTERFACE 6 PIN		
5D		276882001	GASKET - INTERFACE 8 PIN		
5E		276883001	GASKET - INTERFACE 12 PIN		
6		276884001	PLUG - 2 PIN		
6A		276885001	PLUG - 3 PIN		
6B		276886001	PLUG - 4 PIN		
6C		276887001	PLUG - 6 PIN		
6D		98107001	PLUG - 8 PIN (A)		
6E		276985001	PLUG - 8 PIN (B)		
6F		276986001	PLUG - 8 PIN (C)		
6G		276987001	PLUG - 8 PIN (D)		
6H		103211001	PLUG - 12 PIN (A)		
6I		276988001	PLUG - 12 PIN (B)		
6J		276989001	PLUG - 12 PIN (C)		
6K		276990001	PLUG - 12 PIN (D)		
7		91354001	SOCKET - 16/18 GA.		
8		94201001	PLUG - SEALING (12-16)		
9		286553001	TOOL - DEUTSCH CRIMPING (FIELD)		
10		286553003	TOOL - DEUTSCH (FIELD)		

https://truckmanualshub.com/

DTHD Series/HDFB Modules Fig 5-30

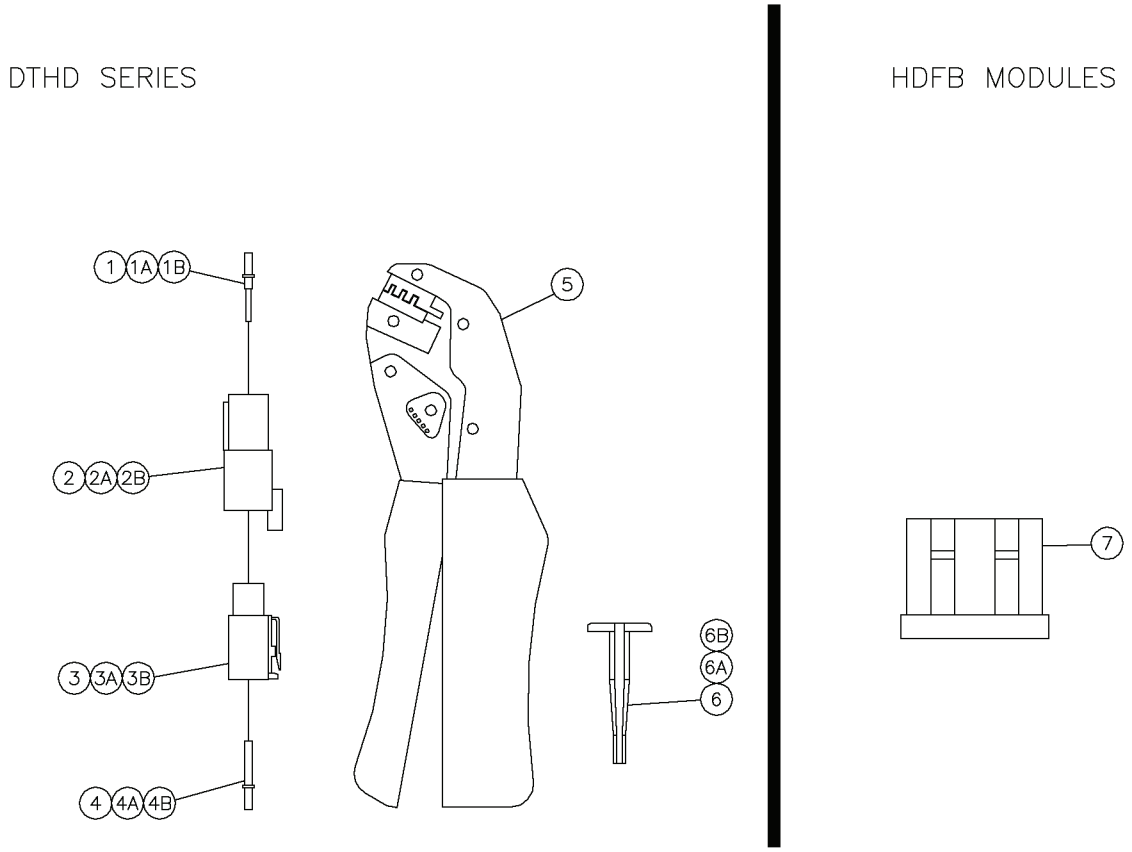

https://truckmanualshub.com/

DTHD Series/HDFB Modules Fig 5-30

REF. NO.	*	PART NO.	DESCRIPTION	QTY.	REMARKS
1		231988001	PIN-12 GA		
1A		276953001	PIN - 8/10 GA.		
1B		276954001	PIN - 6 GA.		
2		279423001	RECEPTACLE - SIZE 4 CONTACT		
2A		279424001	RECEPTACLE - SIZE 8 CONTACT		
2B		279425001	RECEPTACLE - SIZE 12 CONTACT		
3		279426001	PLUG - SIZE 4 CONTACT		
3A		279427001	PLUG - SIZE 8 CONTACT		
3B		279428001	PLUG - SIZE 12 CONTACT		
4		276982001	SOCKET - 12/14 GA. DEUTSCH		
4A		276984001	SOCKET - 8/12 GA.		
4B		276952001	SOCKET - 6 GA.		
5		286553001	TOOL - DEUTSCH CRIMPING (FIELD)		
6		276891001	TOOL - 12/14 GA. EXTRACTOR (YELLOW)		
6A		276889001	TOOL - 8/10 GA. EXTRACTOR (GREEN)		
6B		276888001	TOOL - 6 GA. EXTRACTOR (WHITE)		
7		279430001	MODULE - FEEDBACK (10 PIN)		

https://truckmanualshub.com/

DT Series Diode/Buss Blocks Fig 5-31

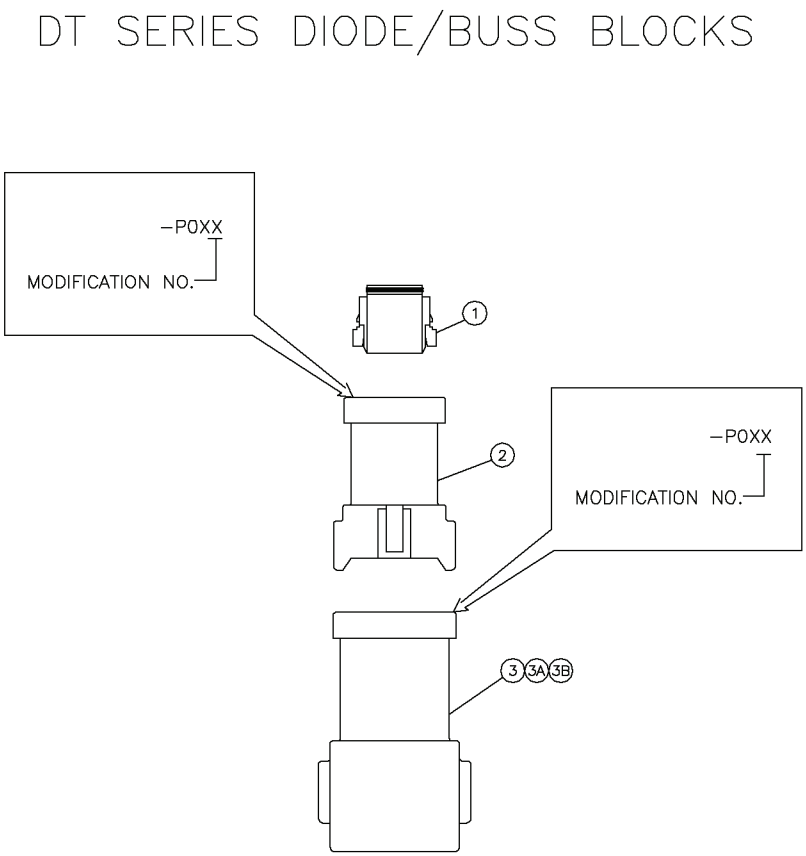

https://truckmanualshub.com/

DT Series Diode/Buss Blocks Fig 5-31

REF. NO.	*	PART NO.	DESCRIPTION	QTY.	REMARKS
1		282531001	MODULE - DEUTSCH DT06-6S 3AMP DIODE	1	
2		700000096	BUSS BLOCK	1	
3		700000102	BUSS BLOCK	1	
3A		700000104	BUSS BLOCK	1	
3B		700000106	BUSS BLOCK	1	

https://truckmanualshub.com/

Remote Lockout Assembly (15' Rack) Fig 5-32

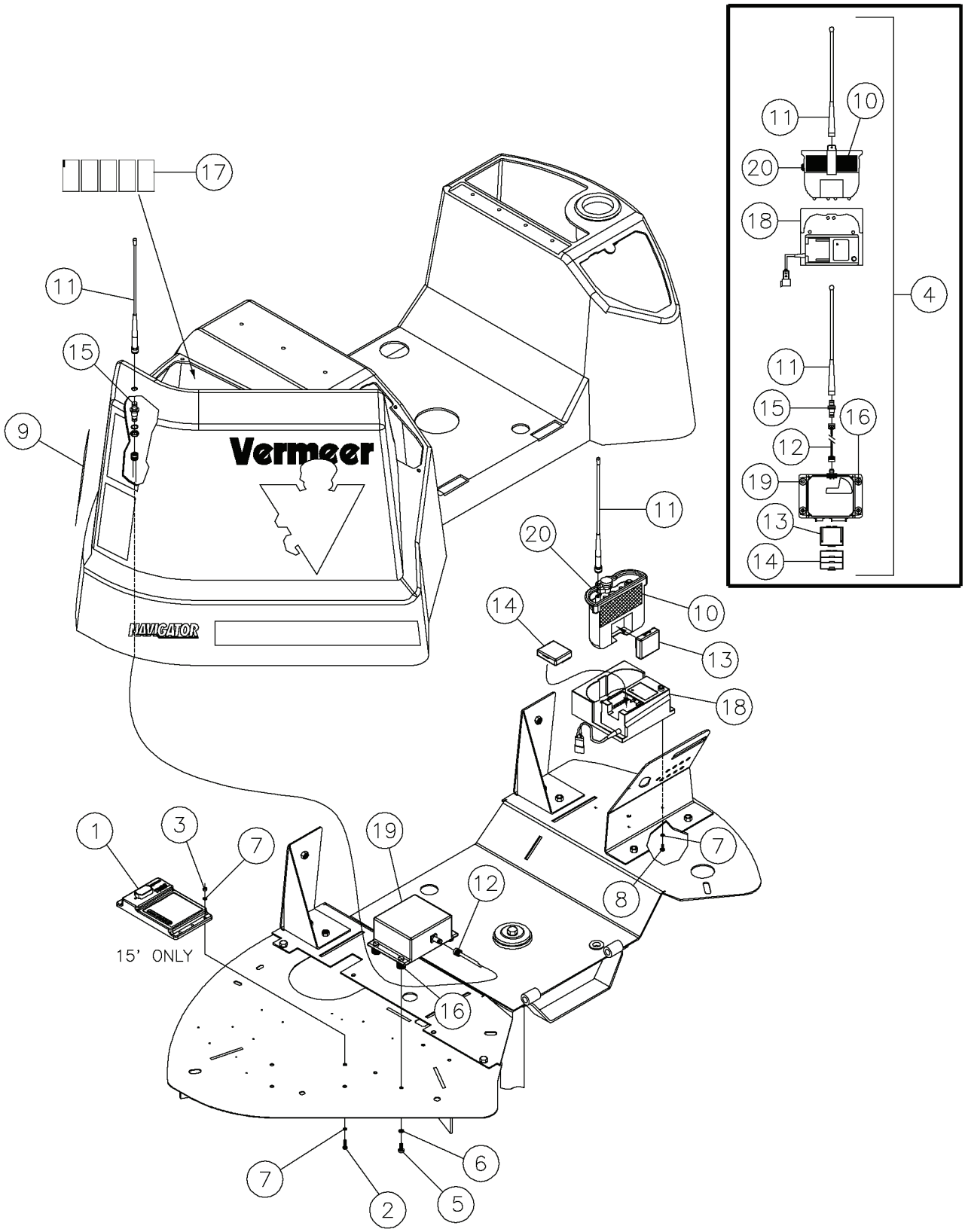

https://truckmanualshub.com/

Remote Lockout Assembly (15' Rack) Fig 5-32

REF. NO.	*	PART NO.	DESCRIPTION	QTY.	REMARKS
		Revision Date	June, 2004		Addition To Manual
1		296252891	REMOTE LOCKOUT CONTROLLER	1	(15' ONLY)
2		57200001	SCREW-#8-32X1/2 RND.HD.MACH.	4	
3		399001	NUT-8-32 HEX	4	
4		296252542	REMOTE LOCKOUT RADIO KIT 458 MHZ	1	
		296250303	REMOTE LOCKOUT RADIO KIT 434 MHZ	1	
		296252543	REMOTE LOCKOUT RADIO KIT 448 MHZ	1	
		296252542	REMOTE LOCKOUT RADIO KIT 458 MHZ	1	
5		506031010	SCREW-HCS,M6-1.00X10,8.8,YZ,D933,FT	4	
6		506046006	WASHER-FLAT,M6,YZ,D,125A	4	
7		485001	WASHER - FLATSTD - .19 - .22 X .56 - .05 - CZ	8	
8		283517001	SCREW - 10 -24 UNC X 3/8 MACHINE	4	
9		7000B811	DECAL - DANGER - RLE - DOMESTIC	1	DOMESTIC
		700IB811	DECAL - DANGER - RLE INTERNATIONAL	1	INTERNATIONAL
10		7000B737	RL TRANSMITTER DECAL	1	
11		286918001	REMOTE LOCKOUT ANTENNA	2	
12		286919001	REMOTE LOCKOUT CABELING FOR ANTENNA	1	
13		296250300	BATTERY - 3.5 VOLTS 1.2 AH	2	
14		296250302	BATTERY HOLDER 3-AA	1	
15		296250301	CONNECTOR BULK HEAD	1	
16		296252528	MOUNT, SHOCK RX M6X10	4	
17		7000B812	DECAL - WARNING	1	DOMESTIC
		700IB812	DECAL - WARNING	1	INTERNATIONAL
18		286903001	REMOTE LOCKOUT DOCKING STATION	1	
		286903501	REMOTE LOCKOUT DOCKING STATION (REBUILT)	1	
19		296252551	REMOTE LOCKOUT RADIO KIT (LOST RX 429)	1	
		286904001	REMOTE LOCKOUT RADIO KIT (LOST RX 434)	1	
		296252547	REMOTE LOCKOUT RADIO KIT (LOST RX 448)	1	
		278530001	REMOTE LOCKOUT RADIO KIT (LOST RX 548)	1	
20		296252550	REMOTE LOCKOUT RADIO KIT (LOST RX 429)	1	
		286917001	REMOTE LOCKOUT RADIO KIT (LOST RX 434)	1	
		296252546	REMOTE LOCKOUT RADIO KIT (LOST RX 448)	1	
		278560001	REMOTE LOCKOUT RADIO KIT (LOST RX 458)	1	

https://truckmanualshub.com/

Remote Lockout Assembly (10' Rack) Fig 5-33

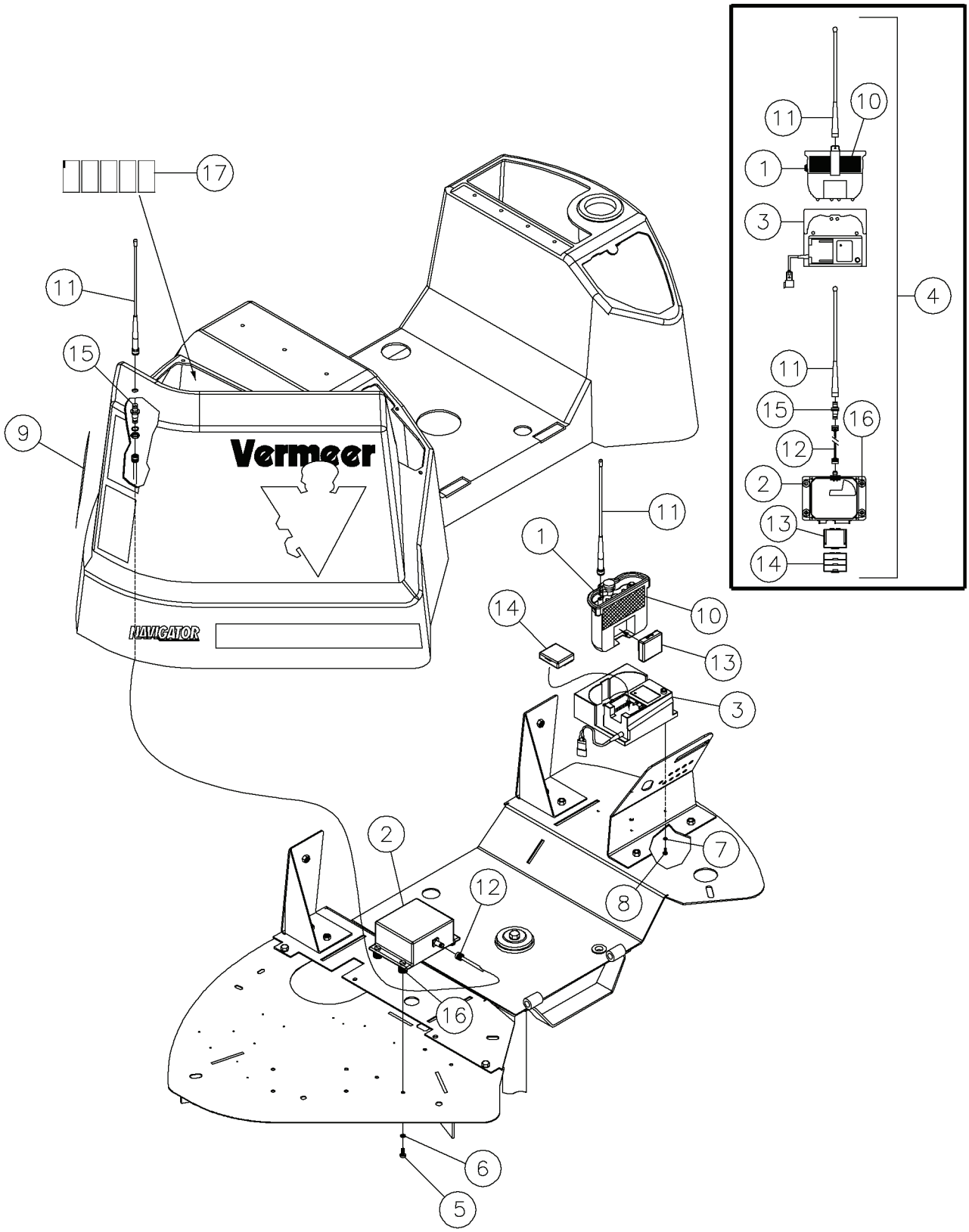

https://truckmanualshub.com/

Remote Lockout Assembly (10' Rack) Fig 5-33

REF. NO.	*	PART NO.	DESCRIPTION	QTY.	REMARKS
		Revision Date	June, 2004		Addition To Manual
1		296252550	REMOTE LOCKOUT RADIO KIT (LOST RX 429)	1	
		286917001	REMOTE LOCKOUT RADIO KIT (LOST RX 434)	1	
		296252546	REMOTE LOCKOUT RADIO KIT (LOST RX 448)	1	
		278560001	REMOTE LOCKOUT RADIO KIT (LOST RX 458)	1	
2		296252551	REMOTE LOCKOUT RADIO KIT (LOST RX 429)	1	
		286904001	REMOTE LOCKOUT RADIO KIT (LOST RX 434)	1	
		296252547	REMOTE LOCKOUT RADIO KIT (LOST RX 448)	1	
		278530001	REMOTE LOCKOUT RADIO KIT (LOST RX 548)	1	
3		286903001	REMOTE LOCKOUT DOCKING STATION	1	
		286903501	REMOTE LOCKOUT DOCKING STATION (REBUILT)	1	
4		296252542	REMOTE LOCKOUT RADIO KIT 458 MHZ	1	
		296250303	REMOTE LOCKOUT RADIO KIT 434 MHZ	1	
		296252543	REMOTE LOCKOUT RADIO KIT 448 MHZ	1	
		296252542	REMOTE LOCKOUT RADIO KIT 458 MHZ	1	
5		506031010	SCREW-HCS,M6-1.00X10,8.8,YZ,D933,FT	4	
6		506046006	WASHER-FLAT,M6,YZ,D,125A	4	
7		485001	WASHER - FLATSTD - .19 - .22 X .56 - .05 - CZ	4	
8		283517001	SCREW - 10 -24 UNC X 3/8 MACHINE	4	
9		7000B811	DECAL - DANGER - RLE - DOMESTIC	1	DOMESTIC
		700IB811	DECAL - DANGER - RLE INTERNATIONAL	1	INTERNATIONAL
10		7000B737	RL TRANSMITTER DECAL	1	
11		286918001	REMOTE LOCKOUT ANTENNA	2	
12		286919001	REMOTE LOCKOUT CABELING FOR ANTENNA	1	
13		296250300	BATTERY - 3.5 VOLTS 1.2 AH	2	
14		296250302	BATTERY HOLDER 3-AA	1	
15		296250301	CONNECTOR BULK HEAD	1	
16		296252528	MOUNT, SHOCK RX M6X10	4	
17		7000B812	DECAL - WARNING	1	DOMESTIC
		700IB812	DECAL - WARNING	1	INTERNATIONAL

https://truckmanualshub.com/

Voltage Assembly Fig 6-1

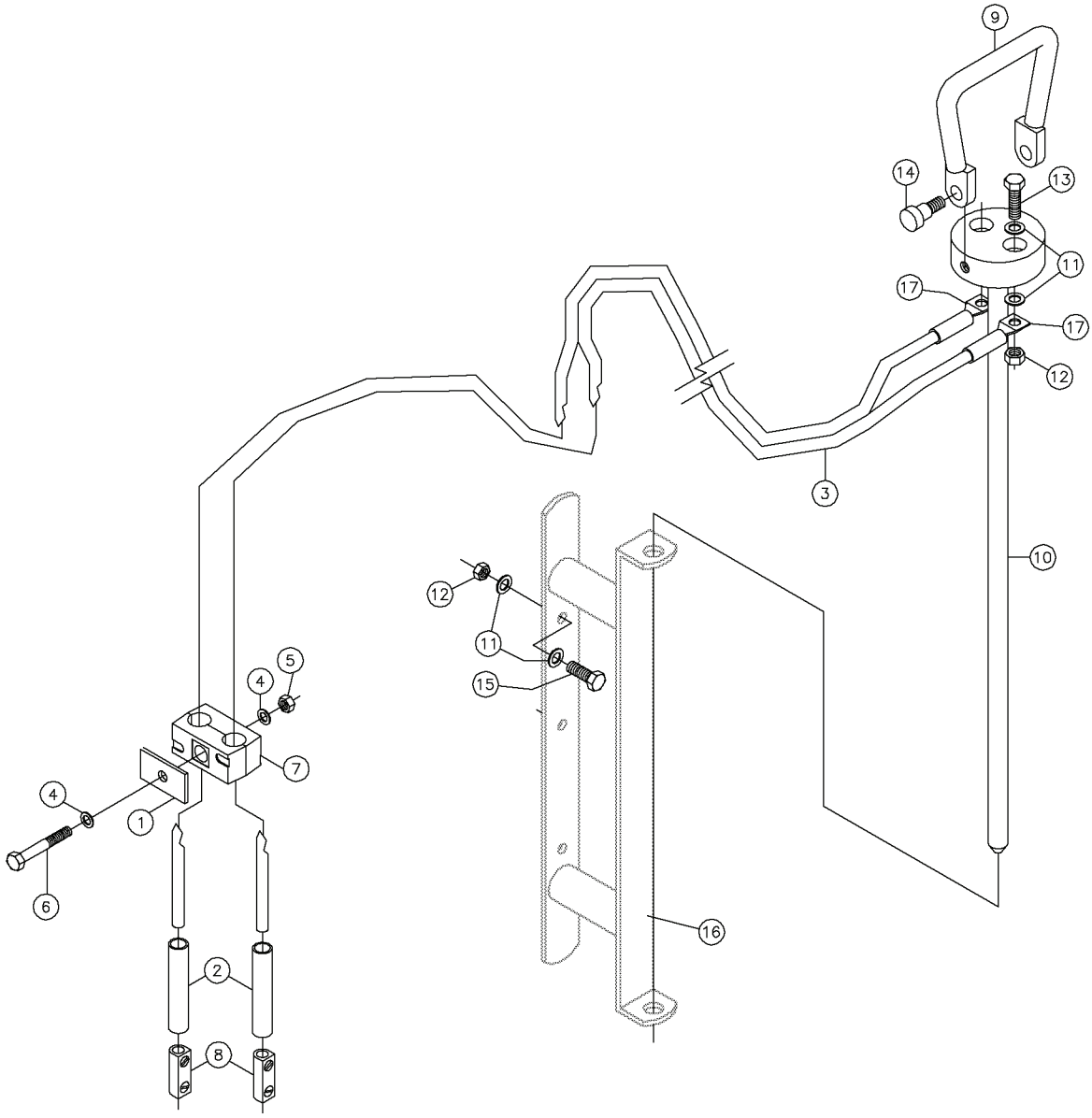

https://truckmanualshub.com/

Voltage Assembly Fig 6-1

REF. NO.	*	PART NO.	DESCRIPTION	QTY.	REMARKS
1		67846003	PLATE-TWIN COVER	1	(15’ RACK)
2		208065001	SHRINK TUBE-3/4ID COMMERCL GRD	A/R	(SPECIFY LENGTH)
3		282078001	CABLE - 6/2GA - 23 FT W/ LUGS	1	
4		235714001	WASHER-5/16 SAE HARD ZINC PLTD	2	(15’ RACK)
5		235741001	NUT-5/16-18 GR8 ZINC PLTD	1	(15’ RACK)
6		244147001	BOLT-5/16-18X2 1/4 GR8 ZINC PL	1	(15’ RACK)
7		900035005	CLAMP-3/8”DOUBLE HOSE	1	(15’ RACK)
8		904355001	CONNECTOR	2	
9		234164001	HANDLE-VOLTAGE STAKE	1	
10		234167001	STAKE-VOLTAGE	1	
11		235713001	WASHER-3/8 SAE HARD ZINC PLTD	5	(QTY 6 FOR 10’ RACK)
12		235725001	NUT-3/8-16 GR8 ZINC PLTD	2	(QTY 3 FOR 10’ RACK)
13		235736001	BOLT-3/8-16X1 1/4 ZINC PLTD	2	
14		240056001	SCREW-1/2-13X1/2 NCSOC HD ZNC	2	
15		235727001	BOLT-3/8-16X1 GR8 HEX ZINC PLT	2	
16		240791001	BRACKET-VOLTAGE STAKE	1	
17		904543001	LUG-4GA.#54140	2	

Safety Features- Gloves, Boots, Cones Fig 6-2

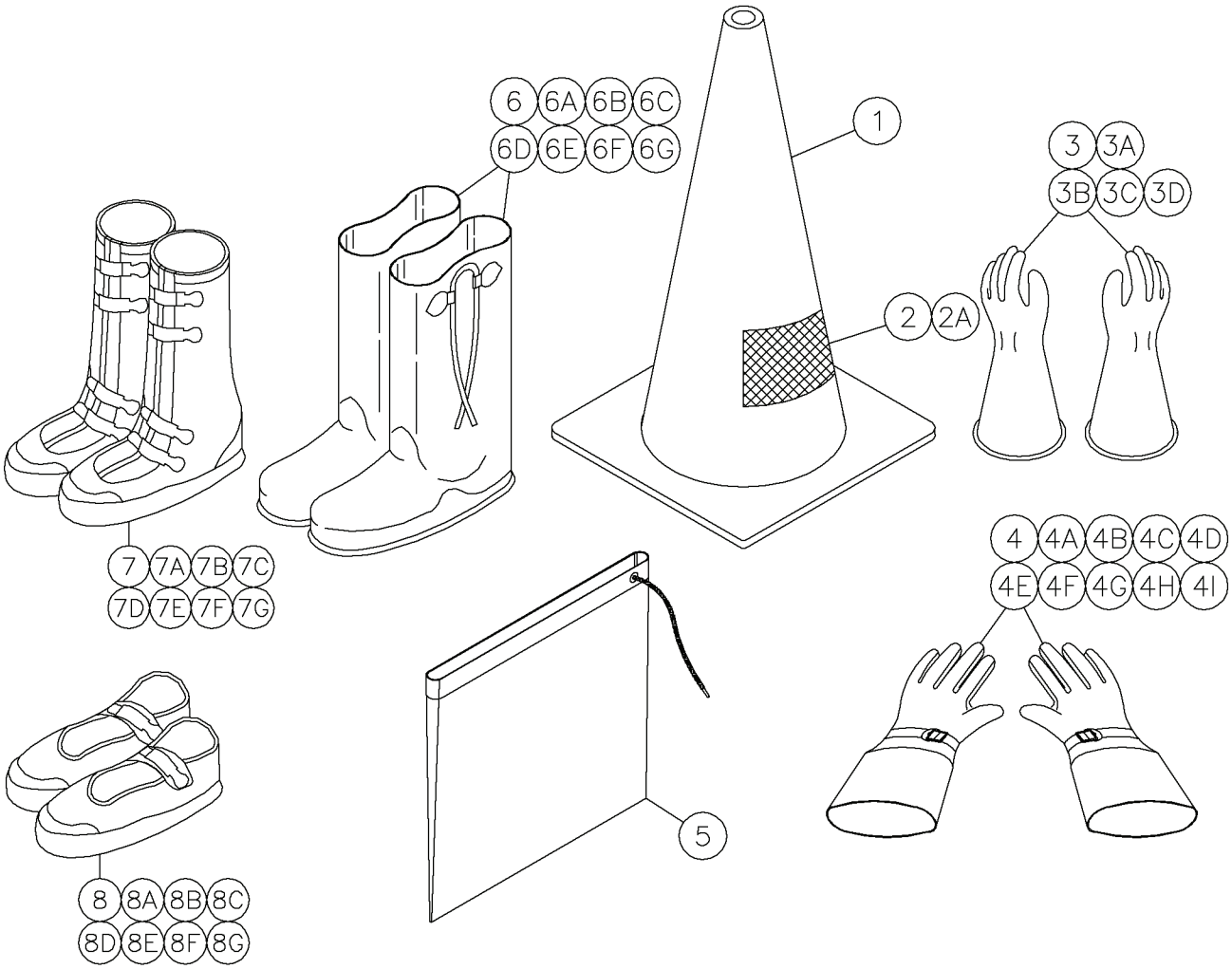

Safety Features- Gloves, Boots, Cones Fig 6-2

REF. NO.	*	PART NO.	DESCRIPTION	QTY.	REMARKS
1		904541001	CONES-ORANGE PVC	4	
2		70000530	DECAL-DANGER	4	
2A		7000I530	DECAL-WARNING (NAVIGATORS)	4	
3		210782001	GLOVES-SIZE 9 RUBBER INSULATE	1PR	
3A		210782005	GLOVES-SIZE 9 1/2 RUBBER INSUL	1PR	
3B		210782003	GLOVES-SIZE 10 RUBBER INSULATE	1PR	
3C		210782007	GLOVE-SIZE 11 RUBBER INSULATED	1PR	
3D		210782009	GLOVE-SIZE 12 RUBBER INSULATED	1PR	
4		210783001	GLOVES-SIZE 9 LEATHER PROTECT	1PR	
4A		210783005	GLOVES SIZE 9 1/2 LEATHER PROT	1PR	
4B		210783003	GLOVES-SIZE 10 LEATHER PROTECT	1PR	
4C		210783007	GLOVE-SIZE 11 LEATHER PROTECT	1PR	
4D		210783009	GLOVE-SIZE 12 LEATHER PROTECT	1PR	
4E		210781001	GLOVE KIT-SIZE 9	1	(INC 1PR OF RUBBER GLOVES & 1PR OF LEATHER GLOVES & 1 GLOVE BAG, REF 5)
4F		224979001	GLOVE KIT-SIZE 9 1/2	1	(INC 1PR OF RUBBER GLOVES & 1PR OF LEATHER GLOVES & 1 GLOVE BAG, REF 5)
4G		210785001	GLOVE KIT-SIZE 10	1	(INC 1PR OF RUBBER GLOVES & 1PR OF LEATHER GLOVES & 1 GLOVE BAG, REF 5)
4H		224990001	GLOVE KIT-SIZE 11	1	(INC 1PR OF RUBBER GLOVES & 1PR OF LEATHER GLOVES & 1 GLOVE BAG, REF 5)
4I		224991001	GLOVE KIT-SIZE 12		(INC 1PR OF RUBBER GLOVES & 1PR OF LEATHER GLOVES & 1 GLOVE BAG, REF 5)
5		210784001	BAG-GLOVE	1	
6		210780009	BOOTS-SIZE 9 OVER-THE-SHOE	1PR	
6A		210780001	BOOTS-SIZE 10 OVER-THE-SHOE	1PR	
6B		210780003	BOOTS-SIZE 11 OVER-THE-SHOE	1PR	
6C		210780005	BOOTS-SIZE 12 OVER-THE-SHOE	1PR	
6D		210780007	BOOTS-SIZE 13 OVER-THE-SHOE	1PR	
6E		210780011	BOOTS-SIZE 14 OVER-THE-SHOE	1PR	
6F		210780013	BOOTS-SIZE 15 OVER-THE-SHOE	1PR	
6G		210780015	BOOTS-SIZE 16 OVER-THE-SHOE	1PR	
7		279118001	BOOT - 4 BUCKLE SIZE 9	1PR	
7A		279118002	BOOT - 4 BUCKLE SIZE 10	1PR	
7B		279118003	BOOT 4 BUCKLE SIZE 11	1PR	
7C		279118004	BOOT - 4 BUCKLE SIZE 12	1PR	
7D		279118005	BOOT - 4 BUCKLE SIZE 13	1PR	
7E		279118006	BOOT - 4 BUCKLE SIZE 14	1PR	
7F		279118007	BOOT - 4 BUCKLE SIZE 15	1PR	
7G		279118008	BOOT - 4 BUCKLE SIZE 16	1PR	
8		279119001	BOOT - ANKLE RUBBER SIZE9	1PR	
8A		279119002	BOOT - ANKLE RUBBER SIZE 10	1PR	
8B		279119003	BOOT - ANKLE RUBBER SIZE 11	1PR	
8C		279119004	BOOT - ANKLE RUBBER SIZE 12	1PR	
8D		279119005	BOOT - ANKLE RUBBER SIZE 13	1PR	
8E		279119006	BOOT - ANKLE RUBBER SIZE 14	1PR	
8F		279119007	BOOT - ANKLE RUBBER SIZE 15	1PR	
8G		279119008	BOOT - ANKLE RUBBER SIZE 16	1PR	

https://truckmanualshub.com/

Water Pump Assembly Fig 7-1r01

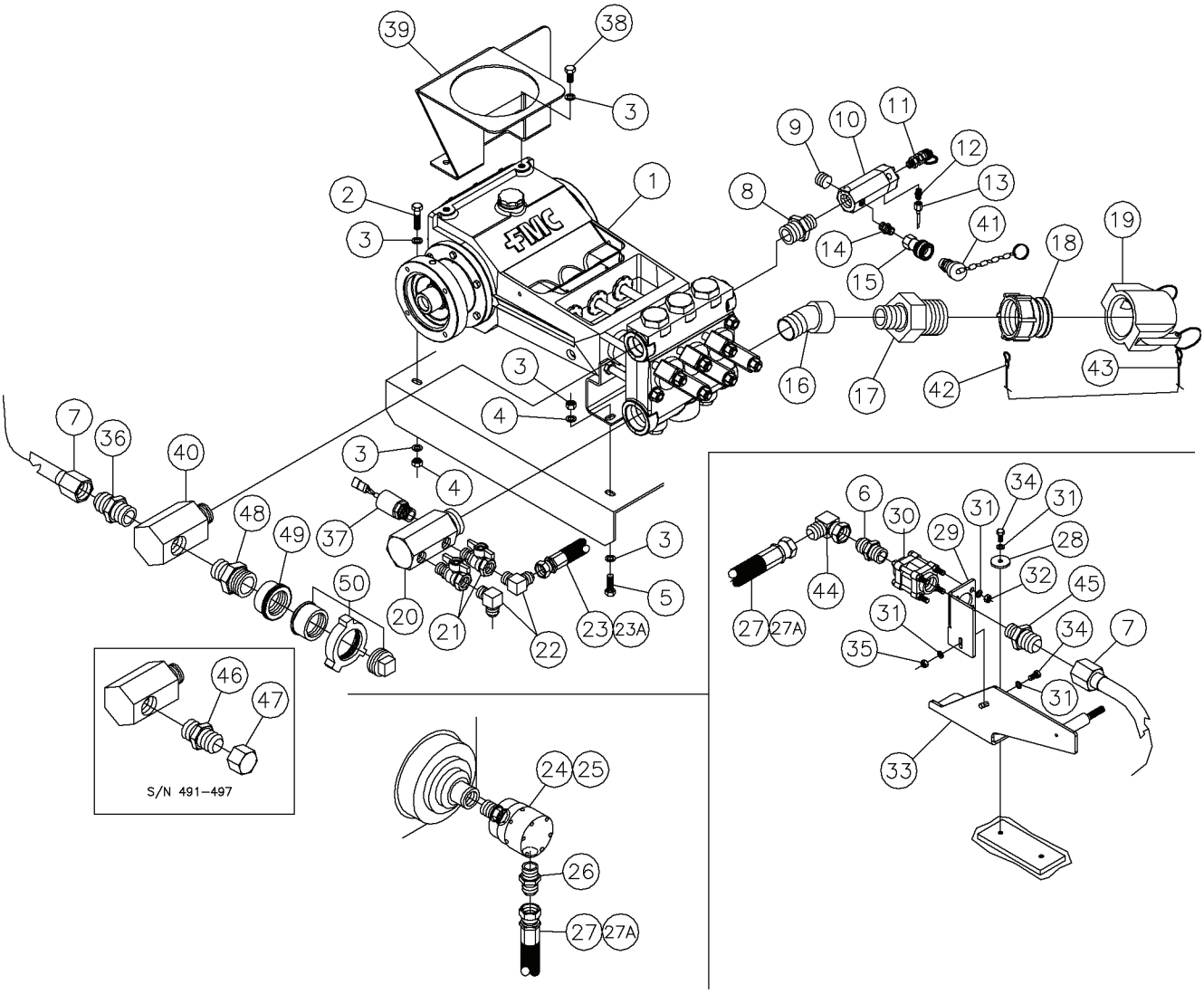

https://truckmanualshub.com/

Water Pump Assembly Fig 7-1r01

REF. NO.	*	PART NO.	DESCRIPTION	QTY.	REMARKS
		Revision Date	June, 2004		Update In Parts List.
1		278951001	PUMP - WATER	1	(BREAKDOWN FIG 14-14)
2		235718001	BOLT-1/2-13X2 GR8 HEX ZINC PLT	2	
3		485025	WASHER-1/2 FLAT-HARDENED-YZ	10	
4		235731001	NUT-1/2-13 GR8 ZINC PLTD	4	
5		235721001	BOLT-1/2-13X1 1/2 GR8 ZINC PLT	2	
6		279146001	FITTING - 1 1/2 MNPT X 16M JIC ST ADAPTER	1	
7		294656001	TUBE - BALL VALVE	1	
8		278827001	FITTING-1 1/2MNPT X 3/4 MNPT	1	
9		503188001	FITTING - PLUG - 12MNPT - HEX	1	
10		296265854	WATER PRESSURE DUMBELL PISTON MAN.ASSY	1	(BREAKDOWN FIG 14-53)
11		75493001	FITTING - TEST - 4MORB - 16MTP	1	
12		60908001	FITTING-4MX4M JIC STR ADAPTER	1	
13		278922001	HOSE - .078X88 4FSJIC ST/ST MICRO 6900 PSI	1	
14		707003	1/2” NPT HEX NIPPLE	1	
15		227235001	COUPLER-1/2”NPT QUICK(FEMALE)	1	
16		244118001	FITTING - 45 - 32FNPT - 32FNPT - CAST - GALV	1	
17		221506001	NIPPLE-REDUCING 3X2 MPT (POLY)	1	
18		275759001	COUPLINE-3”MTPT X3” FPT (POLY)	1	
19		215429001	CAP-3” CAM LOCK *	1	
20		285760001	FITTING - 2M X 3/4F TEE	1	
21		275770001	VALVE - 3/4 MXF BALL W/T-HNDL	2	
22		56215001	FITTING-3/4M PIPE-#12M JIC 90	2	
23		53845273	HOSE-3/4X144 12FS JIC 2250 PSI	1	
23A		53845705	HOSE-3/4X15 12FSJICST/45 2750#	1	(10’ RACK)
24		276390003	REPAIR KIT	1	
25		276390001	SWIVEL-1”NPT1500#1250RPM/46PGM	1	
			Continued On Next Page		

https://truckmanualshub.com/

Water Pump Assembly Fig 7-1r01

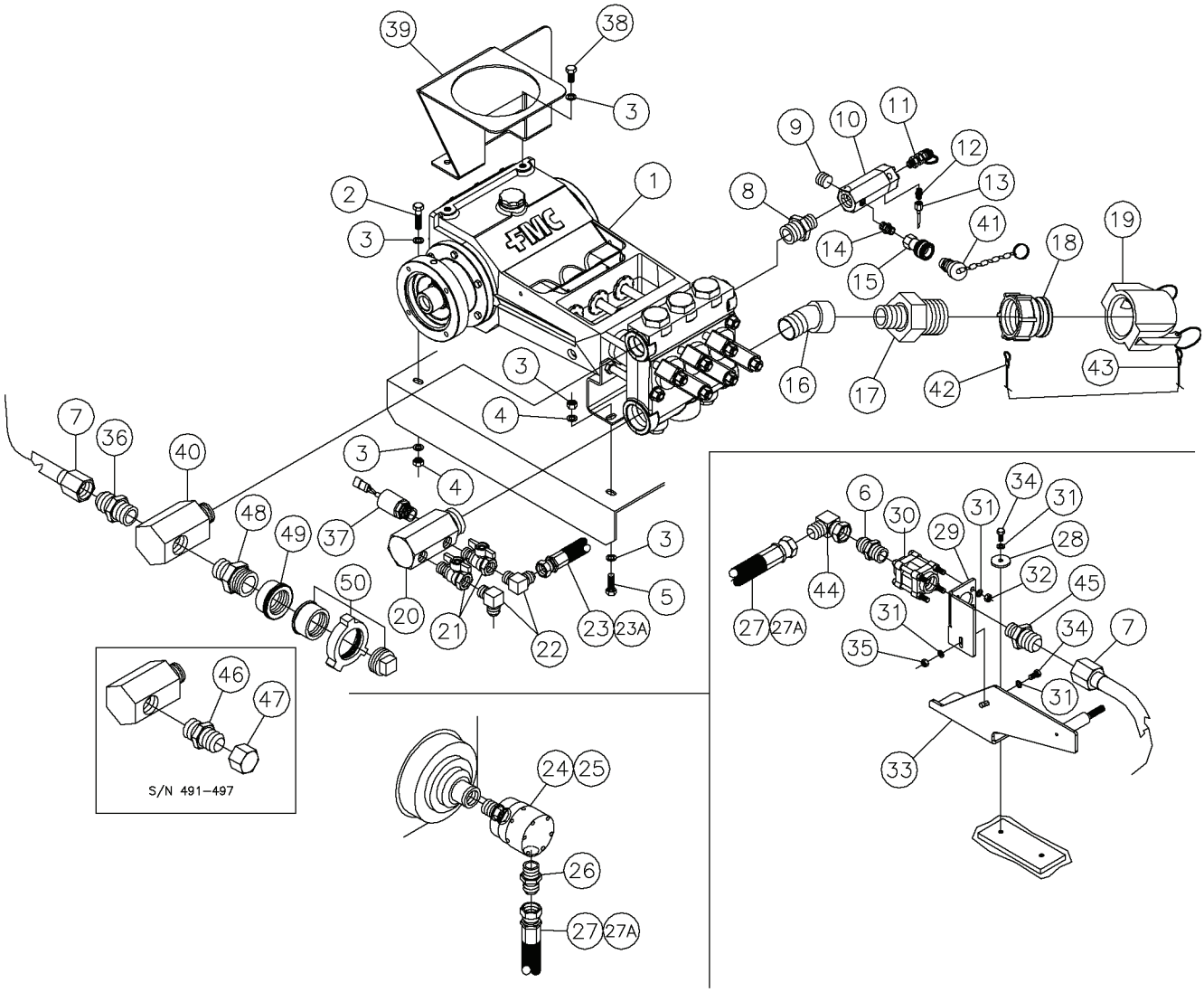

https://truckmanualshub.com/

Water Pump Assembly Fig 7-1r01

REF. NO.	*	PART NO.	DESCRIPTION	QTY.	REMARKS
26		59269001	1 NPTX16 JIC ST ADAPTER	1	
27		278994001	HOSE - 1X308 16FS JIC ST/ST 3000 PSI	1	(15’ RACK)
27A		294602001	HOSE - HYD - 1.00 X 266 - 16FSJ - ST/ST - 3000PSI	1	(10’ RACK)
28		240006001	WASHER - FLAT	2	
29		291693001	BRACKET - BALL VALVE	1	
30		278003001	VALVE - 1” 1500 PSI BRASS BALL	1	(BREAKDOWN FIG 14-29)
31		235713001	WASHER - FLATSTRL - .38 - .41 X .81 - .06-YA-A325	7	
32		250508001	NUT - 3/8-NC Gr8 TOP LOCK Y/ZINC	4	
33		296256159	WELDMENT - BALL VALVE MOUNT	1	
34		235726001	BOLT-3/8-16X3/4 GR8 HEX ZNCPLT	3	
35		235725001	NUT - HEX - .38 - 16 - GR8 - YZ	1	
36		244484001	FITTING - 1 1/2 MNPT X 20 MJIC ST.	1	
37		286893001	SWITCH - MUD PRESSURE 6-15 PSI	1	
38		235729001	SCREW-HCS-.50-13X1.00-GR8-YZ	2	
39		278992001	PLATE - GREASE BUCKET	1	
40		296256160	FITTING - 1.5MNPT X 1.5FNPT X 1.5 FNPT	1	
41		234679001	CAP-DUST	1	
42		244069001	CABLE-3/32”X12 XCX NYLON COATED	1	
43		1838001	CONNECTOR-WIRE (ETC)	2	
44		60904001	1M NPT X 16M JIC 45 DEG ELBOW	1	
45		78051001	FITTING-1”MX20M JIC STR.	1	
46		94569001	FITTING - STR - 24MJ - 24MNPT	1	S/N 491-497
47		86315001	FITTING - CAP - 24FJ	1	S/N 491-497
48		285249001	FITTING - STR 32MNPT - 24MNPT	1	S/N 498-
49		296259780	UNION - MALE	1	S/N 498-
50		296259782	ASSY-CAP-2.00”-HYD-HAMMER	1	S/N 498-

https://truckmanualshub.com/

Water Pump Assembly Fig 7-1

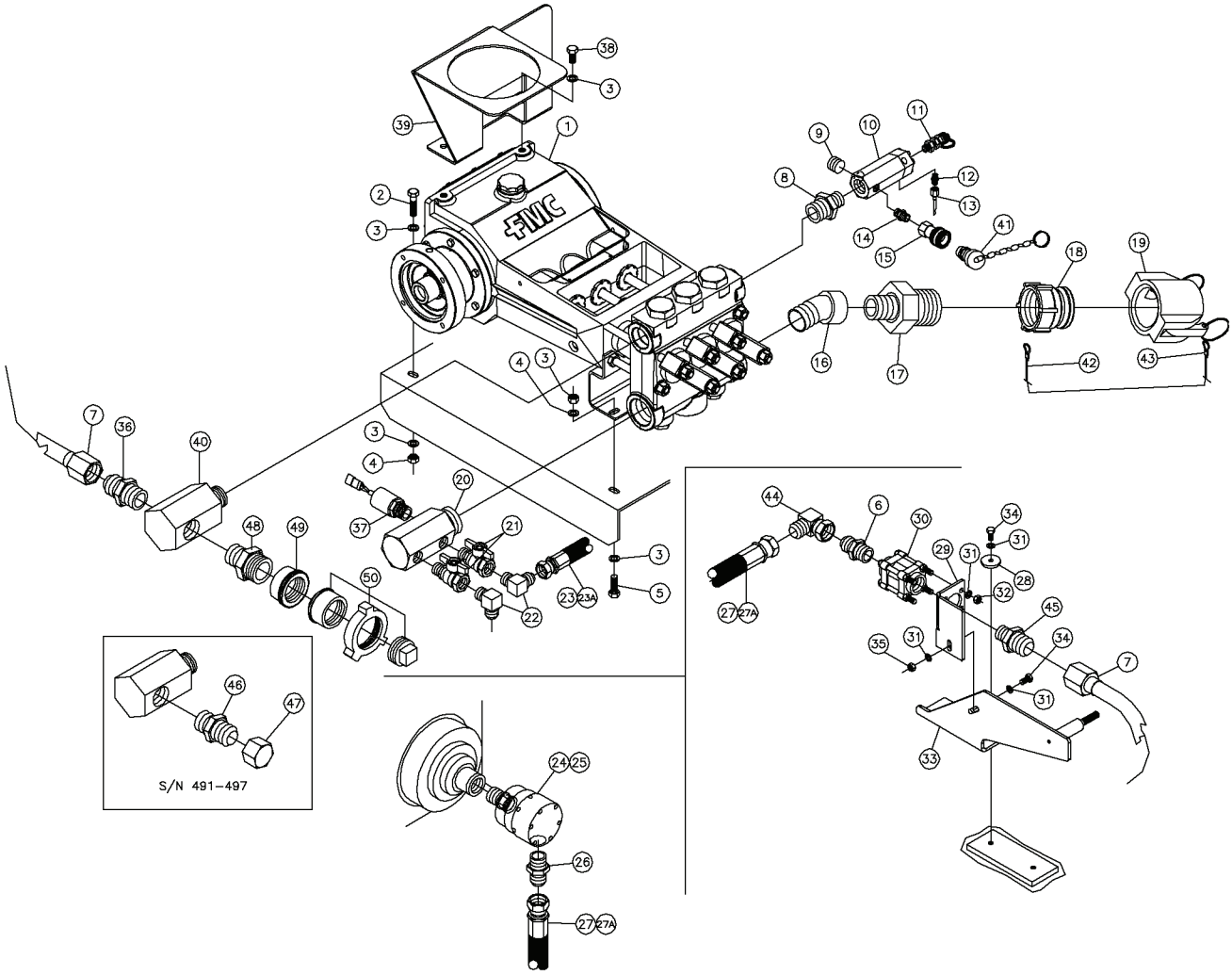

https://truckmanualshub.com/

Water Pump Assembly Fig 7-1

REF. NO.	*	PART NO.	DESCRIPTION	QTY.	REMARKS
1		278825001	PUMP - WATER	1	(BREAKDOWN FIG 14-14)
2		235718001	BOLT-1/2-13X2 GR8 HEX ZINC PLT	2	
3		485025	WASHER-1/2 FLAT-HARDENED-ZINC	10	
4		235731001	NUT-1/2-13 GR8 ZINC PLTD	4	
5		235721001	BOLT-1/2-13X1 1/2 GR8 ZINC PLT	2	
6		279146001	FITTING - 1 1/2 MNPT X 16M JIC ST ADAPTER	1	
7		294656001	TUBE - BALL VALVE	1	
8		278827001	FITTING-1 1/2MNPT X 3/4 MNPT	1	
9		503188001	PIPE PLUG-3/4 HEX HEAD STEEL	1	
10		296265854	WATER PRESSURE DUMBELL PISTON MAN.ASSY	1	(BREAKDOWN FIG 14-53)
11		75493001	COUPLER-MALE TCM20-7/16”UNF-V	1	
12		60908001	FITTING-4MX4M JIC STR ADAPTER	1	
13		278922001	HOSE - .078X88 4FSJIC ST/ST MICRO 6900 PSI	1	
14		707003	1/2” NPT HEX NIPPLE	1	
15		227235001	COUPLER-1/2”NPT QUICK(FEMALE)	1	
16		244118001	FITTING-2” 45 DEG ELBOW GALV	1	
17		221506001	NIPPLE-REDUCING 3X2 MPT (POLY)	1	
18		275759001	COUPLINE-3”MTPT X3” FPT (POLY)	1	
19		215429001	CAP-3” CAM LOCK *	1	
20		285760001	FITTING - 2M X 3/4F TEE	1	
21		275770001	VALVE - 3/4 MXF BALL W/T-HNDL	2	
22		56215001	FITTING-3/4M PIPE-#12M JIC 90	2	
23		53845273	HOSE-3/4X144 12FS JIC 2250 PSI	1	
23A		53845705	HOSE-3/4X15 12FSJICST/45 2750#	1	(10’ RACK)
24		276390003	REPAIR KIT	1	
25		276390001	SWIVEL-1”NPT1500#1250RPM/46PGM	1	
			Continued On Next Page		

https://truckmanualshub.com/

Water Pump Assembly Fig 7-1

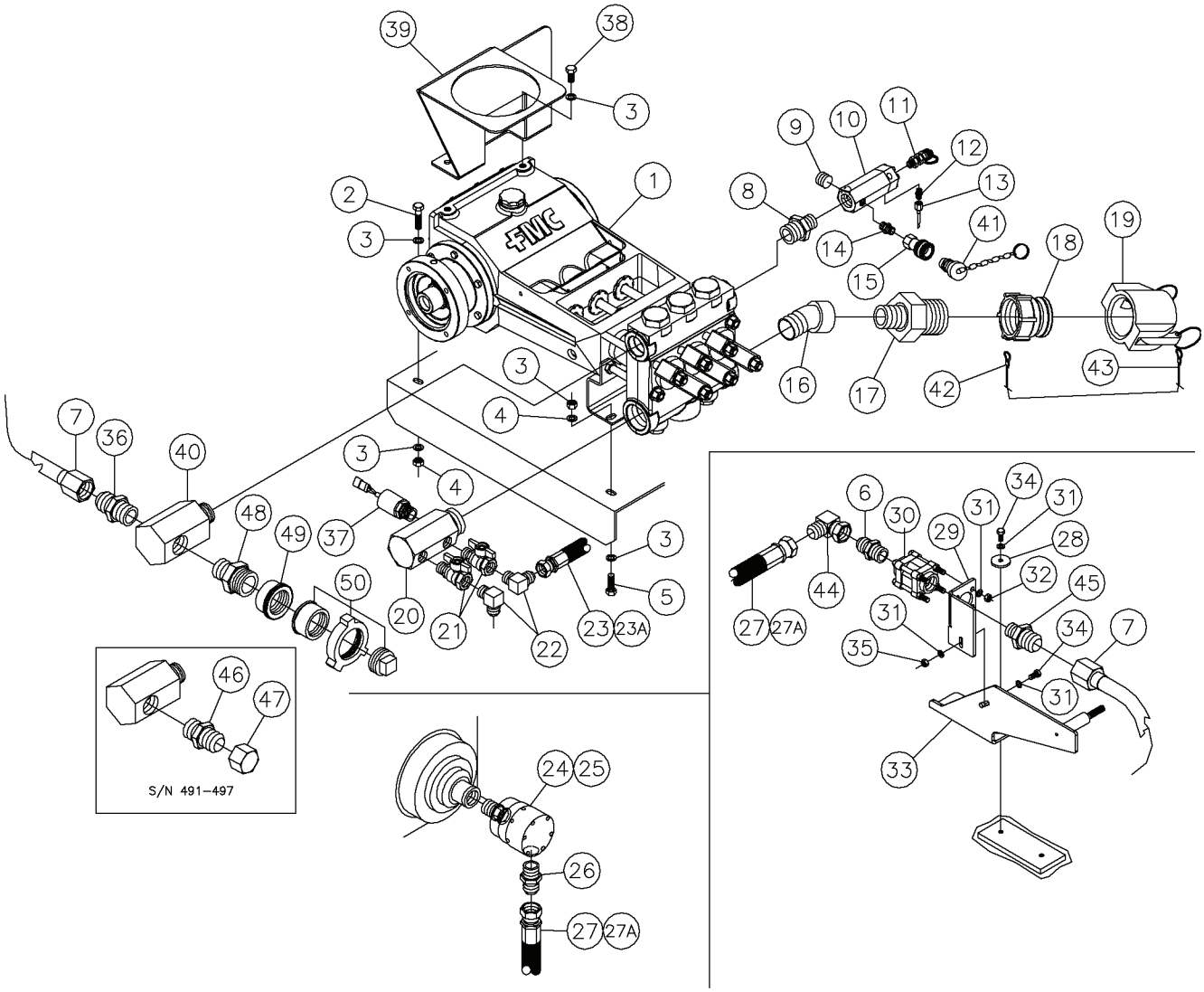

https://truckmanualshub.com/

Water Pump Assembly Fig 7-1

REF. NO.	*	PART NO.	DESCRIPTION	QTY.	REMARKS
26		59269001	ADAPTER - 1 NPTX16 JIC ST	1	
27		278994001	HOSE - 1X308 16FS JIC ST/ST 3000 PSI	1	(15’ RACK)
27A		294602001	HOSE - HYD - 1.00 X 266 - 16FSJ - ST/ST - 3000PSI	1	(10’ RACK)
28		277206001	WASHER - FLAT	1	
29		291693001	BRACKET - BALL VALVE	1	
30		278003001	VALVE - 1” 1500 PSI BRASS BALL	1	(BREAKDOWN FIG 14-29)
31		235713001	WASHER-3/8 SAE HARD ZINC PLTD	7	
32		250508001	NUT - 3/8-NC GR8 TOP LOCK Y/ZINC	4	
33		296256159	WELDMENT - BALL VALVE MOUNT	1	
34		235726001	BOLT-3/8-16X3/4 GR8 HEX ZNCPLT	3	
35		235725001	NUT-3/8-16 GR8 ZINC PLTD	1	
36		244484001	FITTING - 1 1/2 MNPT X 20 MJIC ST.	1	
37		286893001	SWITCH - MUD PRESSURE 6-15 PSI	1	
38		235729001	SCREW-HCS-.50-13X1.00-GR8-YZ	2	
39		278992001	PLATE - GREASE BUCKET	1	
40		296256160	FITTING - 1.5MNPT X 1.5FNPT X 1.5 FNPT	1	
41		234679001	CAP-DUST	1	
42		244069001	CABLE-3/32”X12 XCX NYLON COATED	1	
43		1838001	CONNECTOR-WIRE (ETC)	2	
44		60904001	1M NPT X 16M JIC 45 DEG ELBOW	1	
45		78051001	FITTING-1”MX20M JIC STR.	1	
46		94569001	FITTING1 1/2MNPTX24MJIC STR.	1	S/N 491-497
47		86315001	FITTING-CAP NUT -24F JIC	1	S/N 491-497
48		285249001	FITTING - STR 32MNPT - 24MNPT	1	S/N 498-
49		296259780	UNION - MALE	1	S/N 498-
50		296259782	ASSY-CAP-2.00”-HYD-HAMMER	1	S/N 498-

https://truckmanualshub.com/

Antifreeze System Assembly Fig 7-2

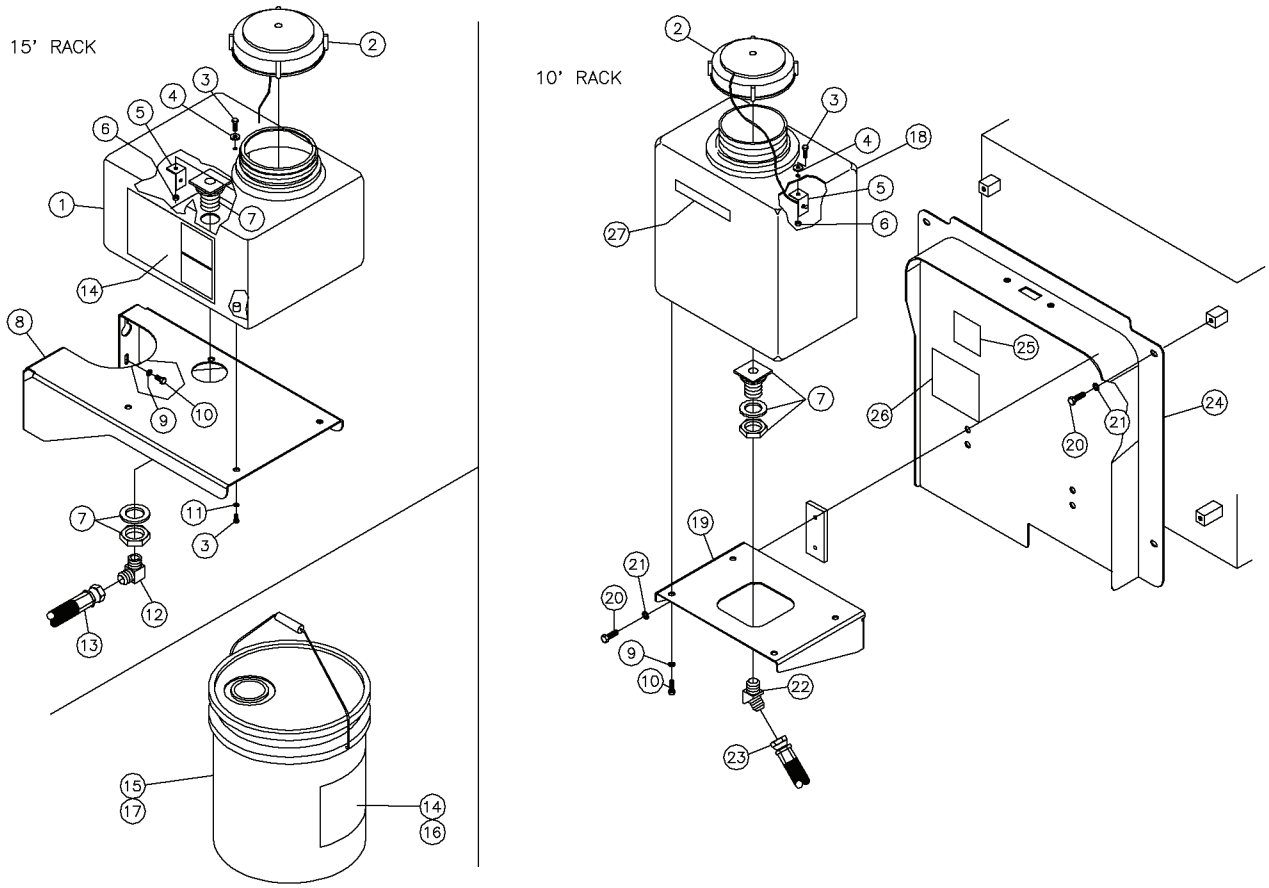

https://truckmanualshub.com/

Antifreeze System Assembly Fig 7-2

REF. NO.	*	PART NO.	DESCRIPTION	QTY.	REMARKS
1		236466001	TANK-6 GALLON POLY	1	
2		236466003	LID-TANK W/ STRING	1	
3		235734001	BOLT-1/4-20X3/4 GR8 ZINC PLTD	5	
4		236466005	WASHER-1/4” SEAL	1	
5		236466007	CLIP	1	
6		235732001	NUT-1/4-20 GR8 ZINC PLTD	1	
7		904062005	BUNG - 3/4”	1	
8		277209001	PLATE-ANTI-FREEZE TANK MOUNT	1	
9		235714001	WASHER-5/16 SAE HARD ZINC PLTD	4	
10		235742001	BOLT-5/16-18X3/4 GR8 ZINC PLTD	4	
11		235716001	WASHER-1/4 SAE HARD ZINC PLTD	4	
12		56215001	FITTING-3/4M PIPE-#12M JIC 90	1	
13		53845273	HOSE-3/4X144 12FS JIC 2250 PSI	1	
14		70000675	DECAL-NAVIGATOR FREEZE GUARD	1	
15		210779001	NAVIGATOR FREEZE GUARD	1	
16		7000A027	DECAL-NAVIGATOR FREEZE GUARD	1	
17		210779005	NAVIGATOR FREEZE GUARD	1	
18		288579001	TANK - 8 GALLON WATER	1	
19		296256133	PLATE - ANTI-FREEZE TANK MOUNT	1	
20		235727001	BOLT-3/8-16X1 GR8 HEX ZINC PLT	8	
21		235713001	WASHER-3/8 SAE HARD ZINC PLTD	8	
22		53666001	FITTING-3/4M PIPE-#12M JIC 45 DEG.	1	
23		53845705	HOSE-3/4X15 12FSJICST/45 2750#	1	
24		294622001	PANEL - FRONT OIL TANK	1	
25		7000B119	DECAL - PATENT	1	
26		7000B295	DECAL - GREASE CHART	1	
27		7000B499	DECAL - ANTIFREEZE	1	

https://truckmanualshub.com/

Wash Wand Assembly Fig 7-3

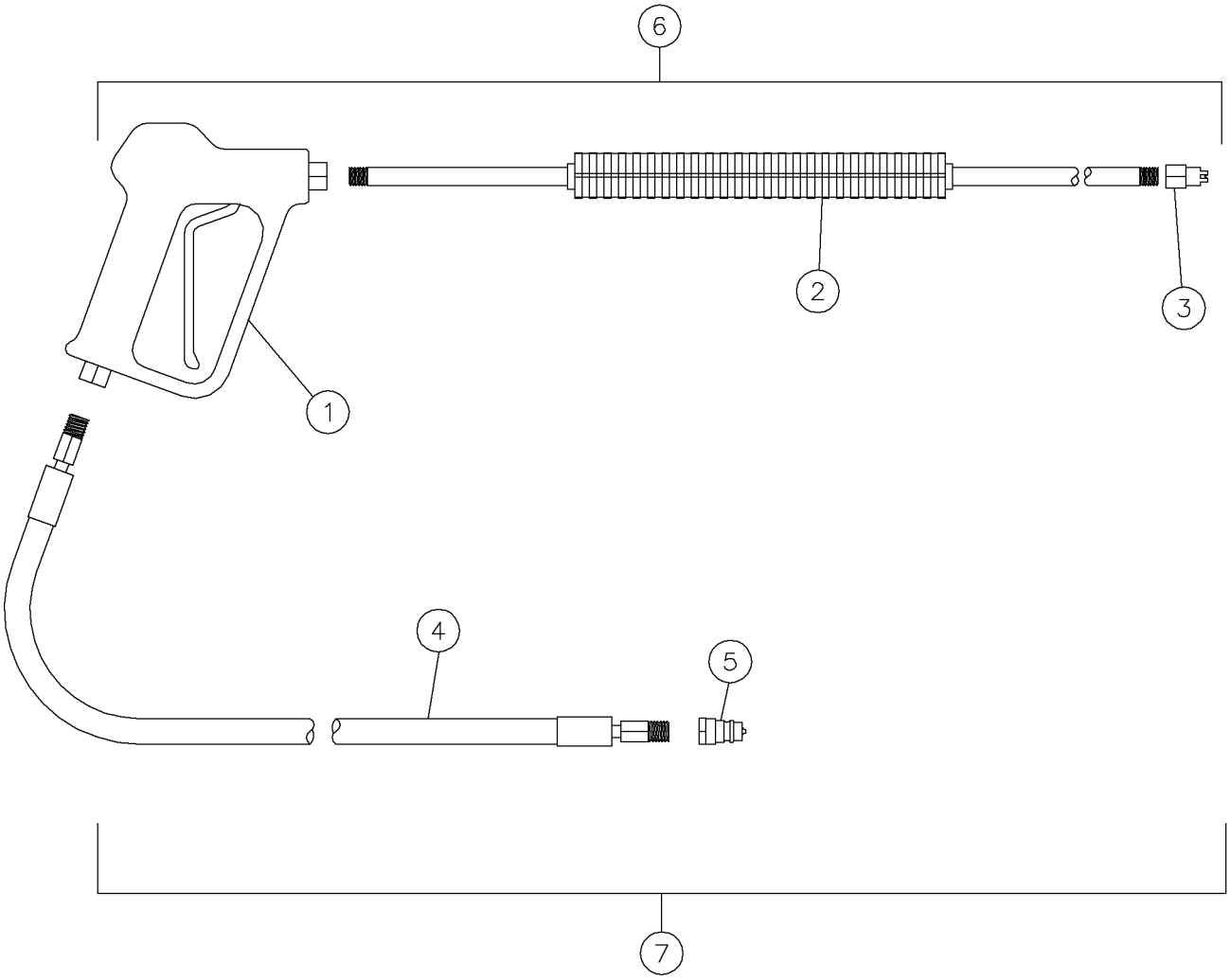

https://truckmanualshub.com/

Wash Wand Assembly Fig 7-3

REF. NO.	*	PART NO.	DESCRIPTION	QTY.	REMARKS
1		904578001	GUN HANDLE	1	
2		904577001	MOLDED LANCE	1	
3		904576001	SPRAY NOZZLE	1	
4		282761001	HOSE-3/8X500 3/8MSNPT/1/2MNPT 100R2	1	
5		227236001	COUPLER-1/2” NPT QUICK(MALE)	1	
6		285927001	GUN ASSY	1	
7		240264001	WAND ASSY	1	(INC ALL ITEMS IN THIS FIGURE)

https://truckmanualshub.com/

Hydraulic Component Location Diagram-Vise Clamp (15' Rack) Fig 8-1

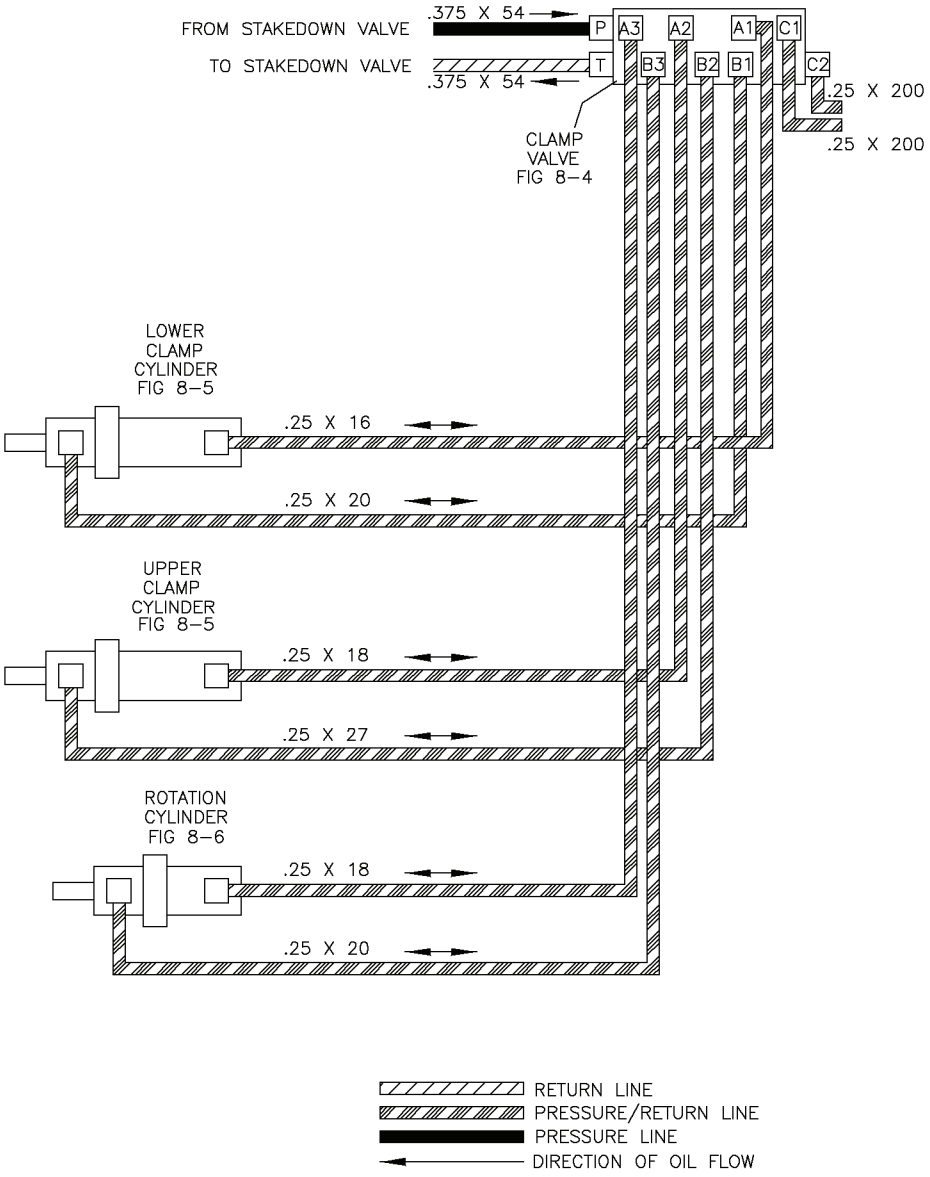

https://truckmanualshub.com/

Hydraulic Component Location Diagram-Vise Clamp (15' Rack) Fig 8-1

REF. NO.	*	PART NO.	DESCRIPTION	QTY.	REMARKS

https://truckmanualshub.com/

Hydraulic Component Location Diagram-Vise Clamp (10' Rack) Fig 8-2

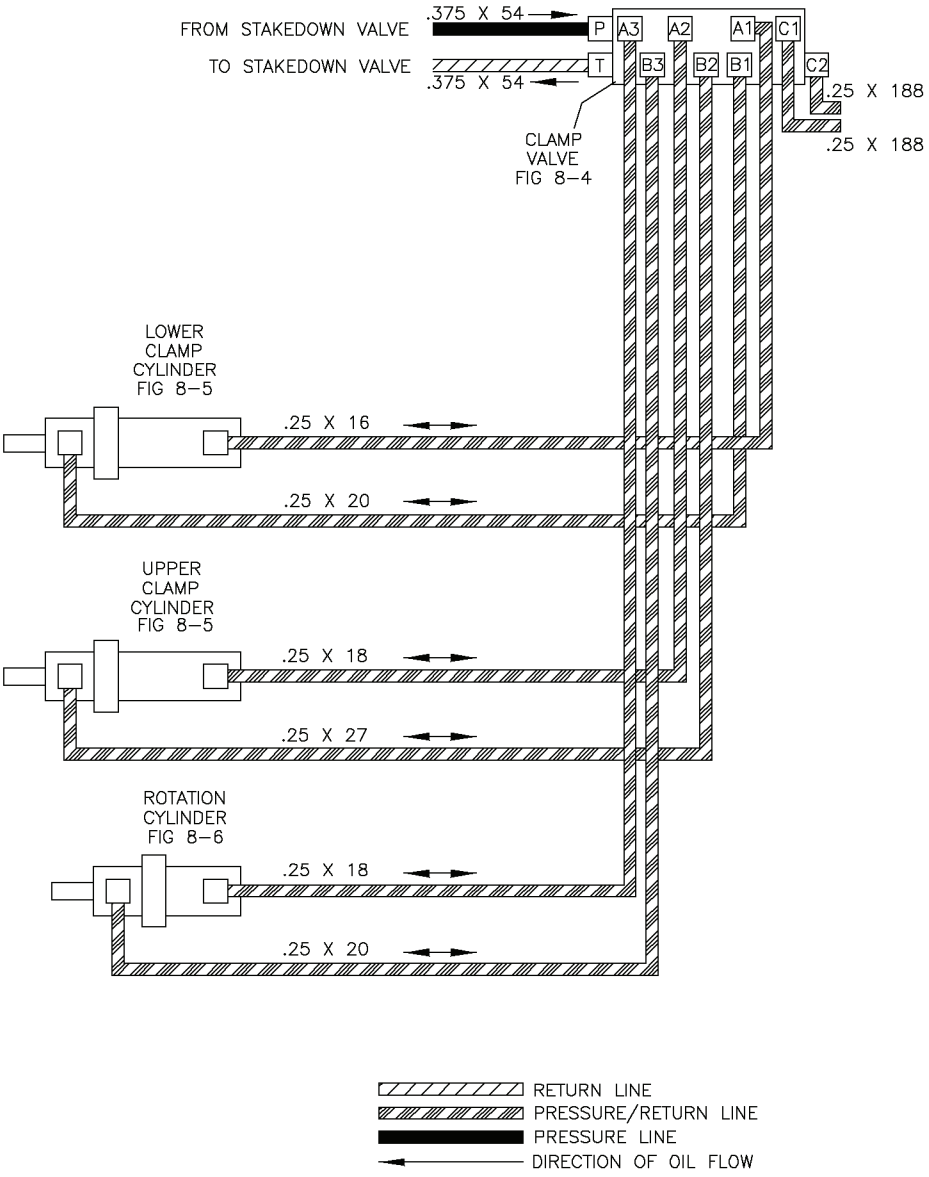

https://truckmanualshub.com/

Hydraulic Component Location Diagram-Vise Clamp (10' Rack) Fig 8-2

REF. NO.	*	PART NO.	DESCRIPTION	QTY.	REMARKS

https://truckmanualshub.com/

Clamp Assembly Fig 8-3r01

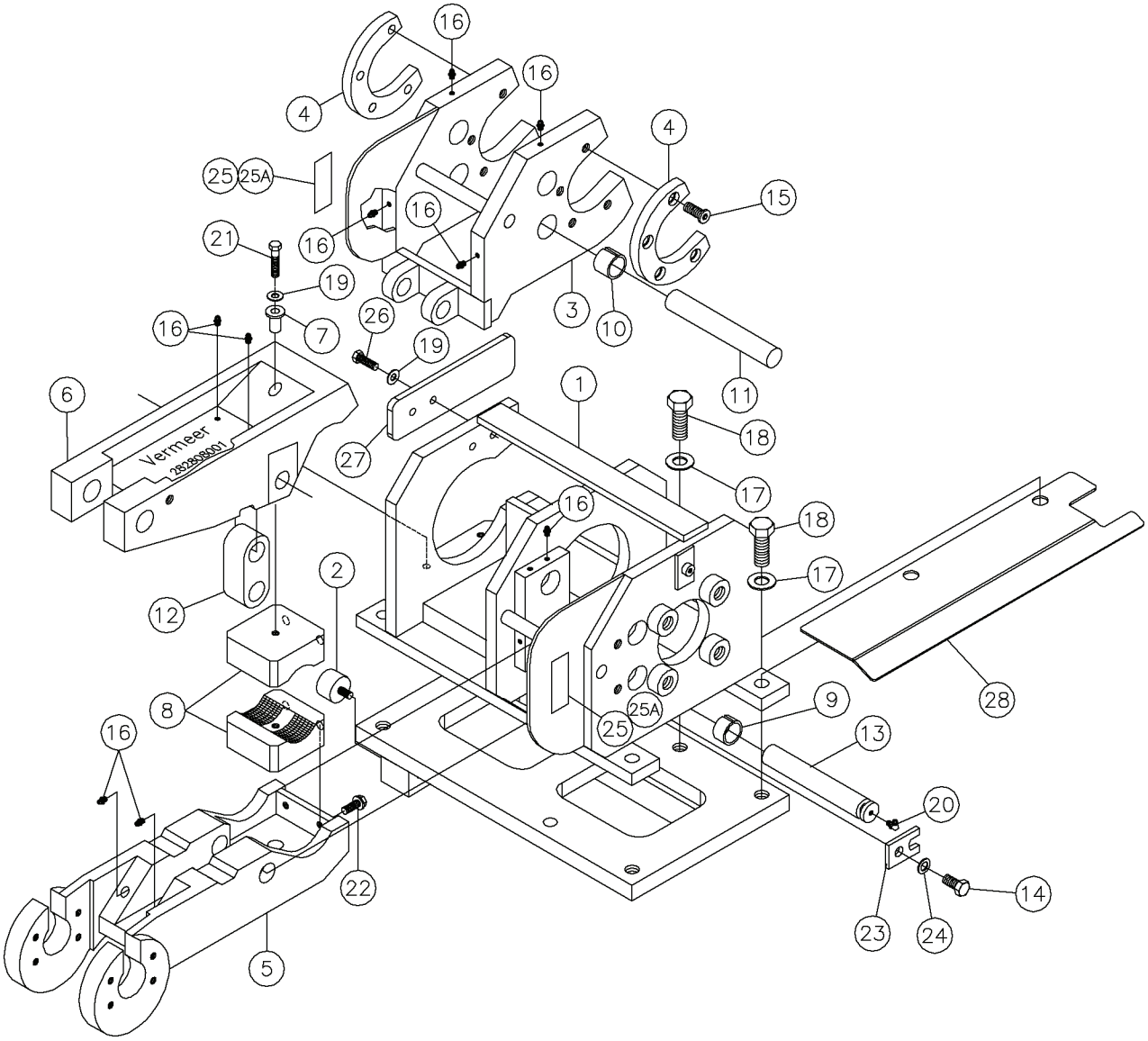

https://truckmanualshub.com/

Clamp Assembly Fig 8-3r01

REF. NO.	*	PART NO.	DESCRIPTION	QTY.	REMARKS
		Revision Date	June, 2004		Update In Illustration & Parts List.
1		243025003	FRAME ASSEMBLY-VISE	1	(INC TWO OF REF 16 & REF 10)
2		122474001	MOUNT-SANDWICH SINGLE STUD	2	
3		240885003	PIVOT ASSEMBLY-VISE	1	(INC FOUR OF REF 16 & REF 10)
4		240908001	PLATE-INSERT	2	
5		282810003	ARM ASSEMBLY - LOWER VISE ARM	2	(INC TWO OF REF 16)
6		282811003	ARM ASSY - UPPER VISE	2	(INC TWO OF REF 16)
7		228061001	PIN-TILT	2	
8		276415001	DIE - JAW 2 3/4 OD	4	(FIRESTICK II 2-3/8’ DIA ROD)
9		240878001	BSHG-STL 1 3/8 ODX1 1/8 ID-.75	4	
10		240877001	BSHG-STL 1 3/8 ODX1 1/8 ID-1.0	4	
11		240918001	PIN-PIVOT	2	
12		240917001	PLATE-LINK	2	
13		240909003	PIN ASSEMBLY-VISE	2	(INC ONE OF REF 20)
14		235729001	SCREW-HCS-.50-13X1.00-GR8-YZ	2	
15		240854001	SCREW-1/2-13 UNCX1 1/4 LOW SH	8	
16		598001	FITTING-1/4” NF ST GREASE ZERK	12	
17		235717001	WASHER-3/4 FLAT HARDENED YELLOW ZINC	4	
18		235746001	BOLT-3/4-10X2 GR8 HEX ZNC PLTD	4	
19		235713001	WASHER - FLATSTRL - .38 - .41 X .81 - .06-YA-A325	6	
20		597001	ZERK-1/4” NF 90 DEG GREASE	2	
21		235720001	BOLT-3/8-16X1 3/4 6R8 ZINC PLT	2	
22		4475010	BOLT-3/8-16X1 FLANGE WHIZ	4	
23		235929001	PLATE-TAB	2	
24		485025	WASHER-1/2 FLAT-HARDENED-YZ	2	
25		7000A864	DECAL-WARNING DOMESTIC	2	
25A		700IA864	DECAL-WARNING INTERNATIONAL	2	
26		235726001	BOLT-3/8-16X3/4 GR8 HEX ZNCPLT	4	
27		291534001	BAR - ROD GUARD	1	
28		291538001	PLATE-FRONT VICE	1	

https://truckmanualshub.com/

Clamp Assembly Fig 8-3

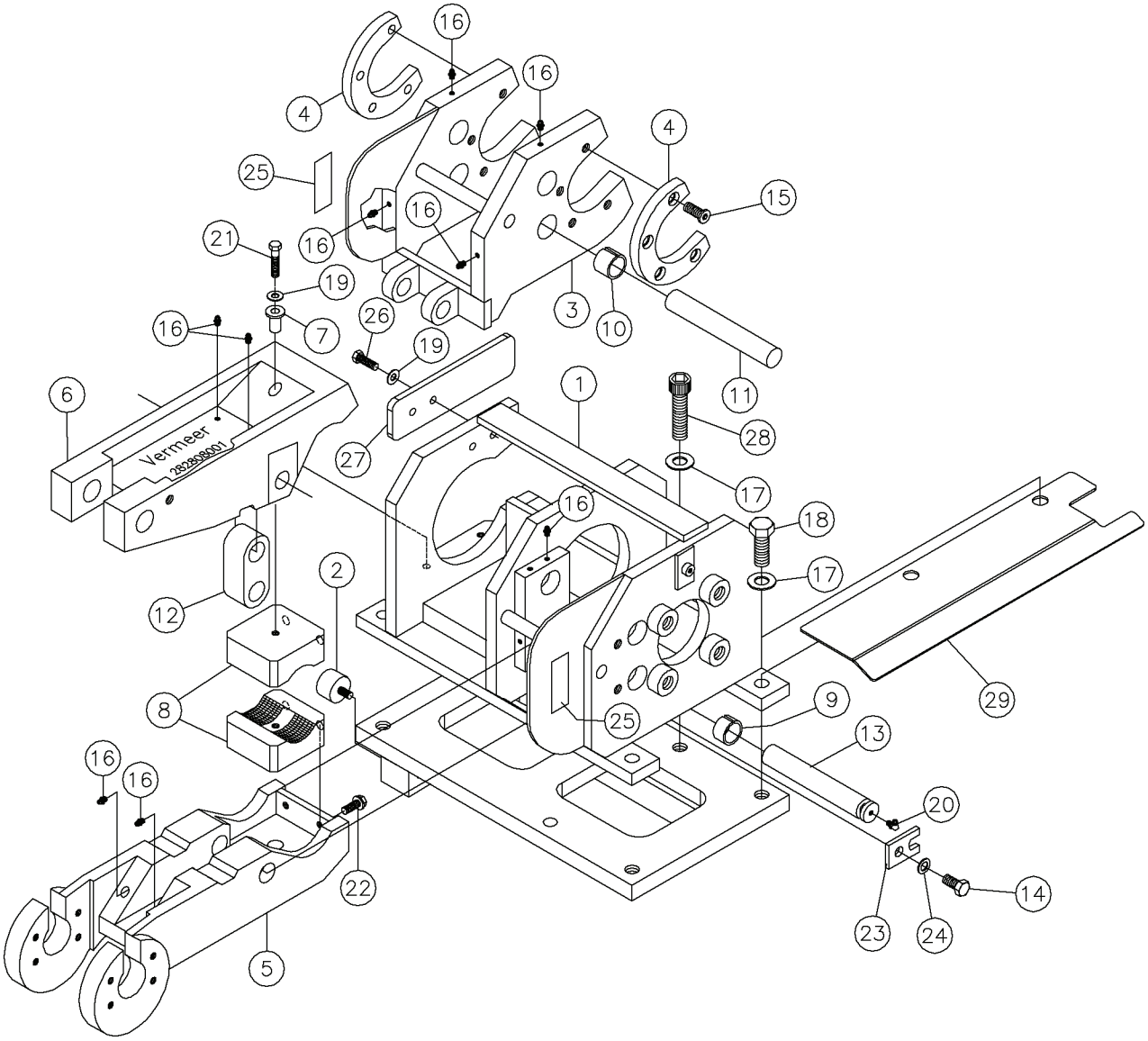

https://truckmanualshub.com/

Clamp Assembly Fig 8-3

REF. NO.	*	PART NO.	DESCRIPTION	QTY.	REMARKS
1		243025003	FRAME ASSEMBLY-VISE	1	(INC TWO OF REF 16 & FOUR OF REF 10)
2		122474001	MOUNT-SANDWICH SINGLE STUD	2	
3		240885003	PIVOT ASSEMBLY-VISE	1	(INC FOUR OF REF 16 & REF 10)
4		240908001	PLATE-INSERT @22852	2	
5		282810003	ARM ASSEMBLY - LOWER VISE ARM	2	(INC TWO OF REF 16)
6		282811003	ARM ASSY - UPPER VISE	2	(INC TWO OF REF 16)
7		228061001	PIN-TILT	2	
8		276415001	DIE - JAW 2 3/4 OD	4	(FIRESTICK II 2-3/8' DIA ROD)
9		240878001	BSHG-STL 1 3/8 ODX1 1/8 ID-.75	4	
10		240877001	BSHG-STL 1 3/8 ODX1 1/8 ID-1.0	4	
11		240918001	PIN-PIVOT	2	
12		240917001	PLATE-LINK F/C72750	2	
13		240909003	PIN ASSEMBLY-VISE	2	(INC ONE OF REF 20)
14		235729001	SCREW-HCS-.50-13X1.00-GR8-YZ	2	
15		240854001	SCREW-1/2-13 UNCX1 1/4 LOW SH	8	
16		598001	ZERK-1/4" NF ST GREASE	12	
17		235717001	WASHER-3/4 FLAT HARDENED YELLOW ZINC	6	
18		235746001	BOLT-3/4-10X2 GR8 HEX ZNC PLTD	6	
19		235713001	WASHER-3/8 SAE HARD ZINC PLTD	6	
20		597001	ZERK-1/4" NF 90 DEG GREASE	2	
21		235720001	BOLT-3/8-16X1 3/4 6R8 ZINC PLT	2	
22		4475010	BOLT-3/8-16X1 FLANGE WHIZ	4	
23		235929001	PLATE-TAB @22852	2	
24		485025	WASHER-1/2 FLAT-HARDENED-ZINC	2	
25		7000A864	DECAL-WARNING DOMESTIC	2	
25A		700IA864	DECAL-WARNING INTERNATIONAL	2	
26		235726001	BOLT-3/8-16X3/4 GR8 HEX ZNCPLT	4	
27		276486001	COVER - RUBBER STOP	1	
28		249153001	SCREW-3/4-10X2 1/4 GR8 Y/ZINC	1	
29		291538001	PLATE-FRONT VICE	1	

https://truckmanualshub.com/

Vise Clamp Valve Assembly Fig 8-4

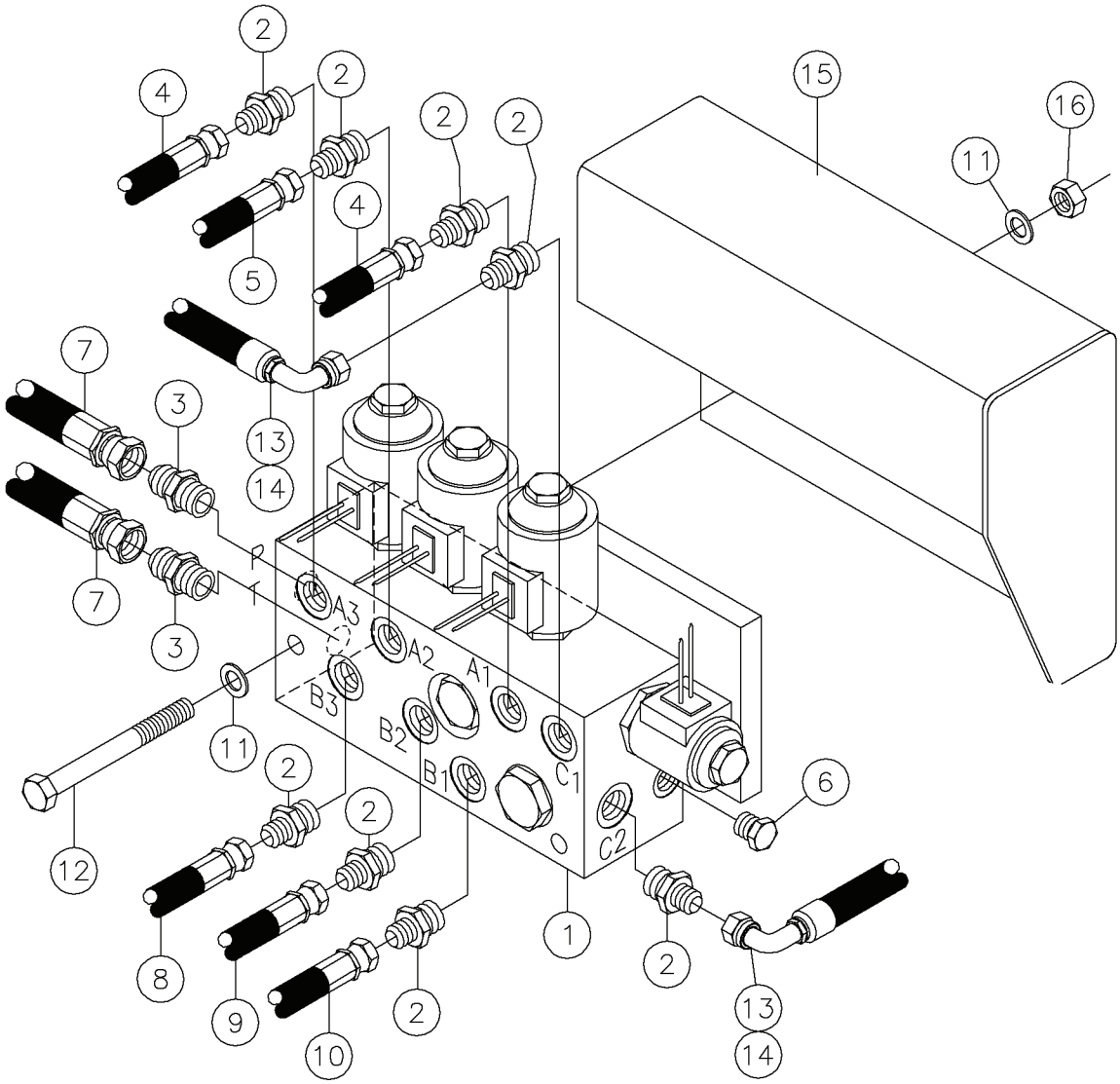

https://truckmanualshub.com/

Vise Clamp Valve Assembly Fig 8-4

REF. NO.	*	PART NO.	DESCRIPTION	QTY.	REMARKS
1		251113001	VALVE - VISE LOCK	1	(BREAKDOWN FIG 14-19)
2		57968001	FITTING-STR-4MJ-6MORB	8	
3		65565001	FITTING - 6M O-RING X 6M JIC ST.	2	
4		53843593	HOSE-1/4X18 4FS JIC 3000 PSI	2	
5		53843741	HOSE-1/4X18 4FSJICST/90 3000#	1	
6		5553001	PLUG-#6M	1	
7		279052001	HOSE-3/8 X 54 FSJIC X FSJIC 90	2	
8		53843385	HOSE-1/4X20 4FS JIC 3000 PSI	1	
9		279050001	HOSE-1/4X27 4FSJIC ST/90 M3K	1	
10		53843577	HOSE-1/4X16 4FSJICST/4FSJIC90D	1	
11		235713001	WASHER-3/8 SAE HARD ZINC PLTD	4	
12		16114034	BOLT-3/8-16X3 1/2 HEX HD. GR8	2	
13		281839001	HOSE - 1/4 X 200 4FS JIC ST/90 3000 PSI	2	(15’ RACK)
14		294606001	HOSE - HYD. - .25 X 188 - 4FSJ - ST/90 - 3000PSI	2	(10’ RACK)
15		285543001	SHIELD-VICE VALVE	1	
16		235725001	NUT-3/8-16 GR8 ZINC PLTD	2	

https://truckmanualshub.com/

Jaw Cylinder Assembly Fig 8-5

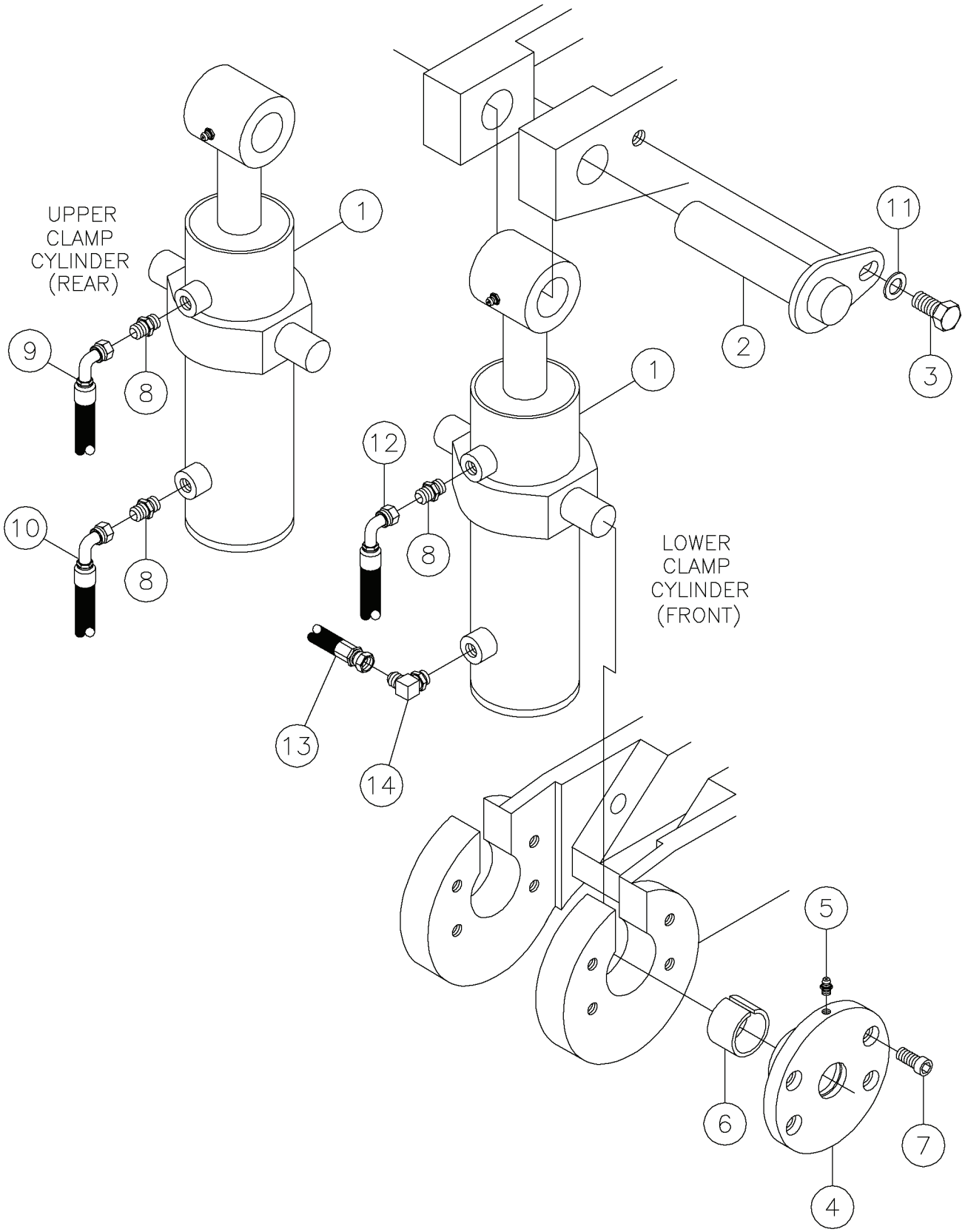

Jaw Cylinder Assembly Fig 8-5

REF. NO.	*	PART NO.	DESCRIPTION	QTY.	REMARKS
1		287590001	CYLINDER - 2-1/2 X 6-5/8	2	(BREAKDOWN FIG 14-40)
2		228058001	PIN-CLAMP	2	
3		235729001	SCREW-HCS-.50-13X1.00-GR8-YZ	2	
4		240907001	BUSHING-TRUNNION	4	
5		598001	ZERK-1/4” NF ST GREASE	4	
6		1835025	BSHG.-STL.- 1 1/2 X 1 1/4 X 1	4	
7		601696010	SOCKET HD CAP SCREW 3/8-16X1 Z	16	
8		60908001	FITTING-4MX4M JIC STR ADAPTER	3	
9		279050001	HOSE-1/4X27 4FSJIC ST/90 M3K	1	
10		53843593	HOSE-1/4X18 4FS JIC 3000 PSI	1	
11		485025	WASHER-1/2 FLAT-HARDENED-ZINC	2	
12		53843531	HOSE-1/4X20 4FS JIC ST/4FSJC90	1	
13		53843577	HOSE-1/4X16 4FSJICST/4FSJIC90D	1	
14		59423001	FIT-4M JICX4M ADJ.90 DEG.ELBOW	1	

https://truckmanualshub.com/

Rotation Cylinder Assembly Fig 8-6

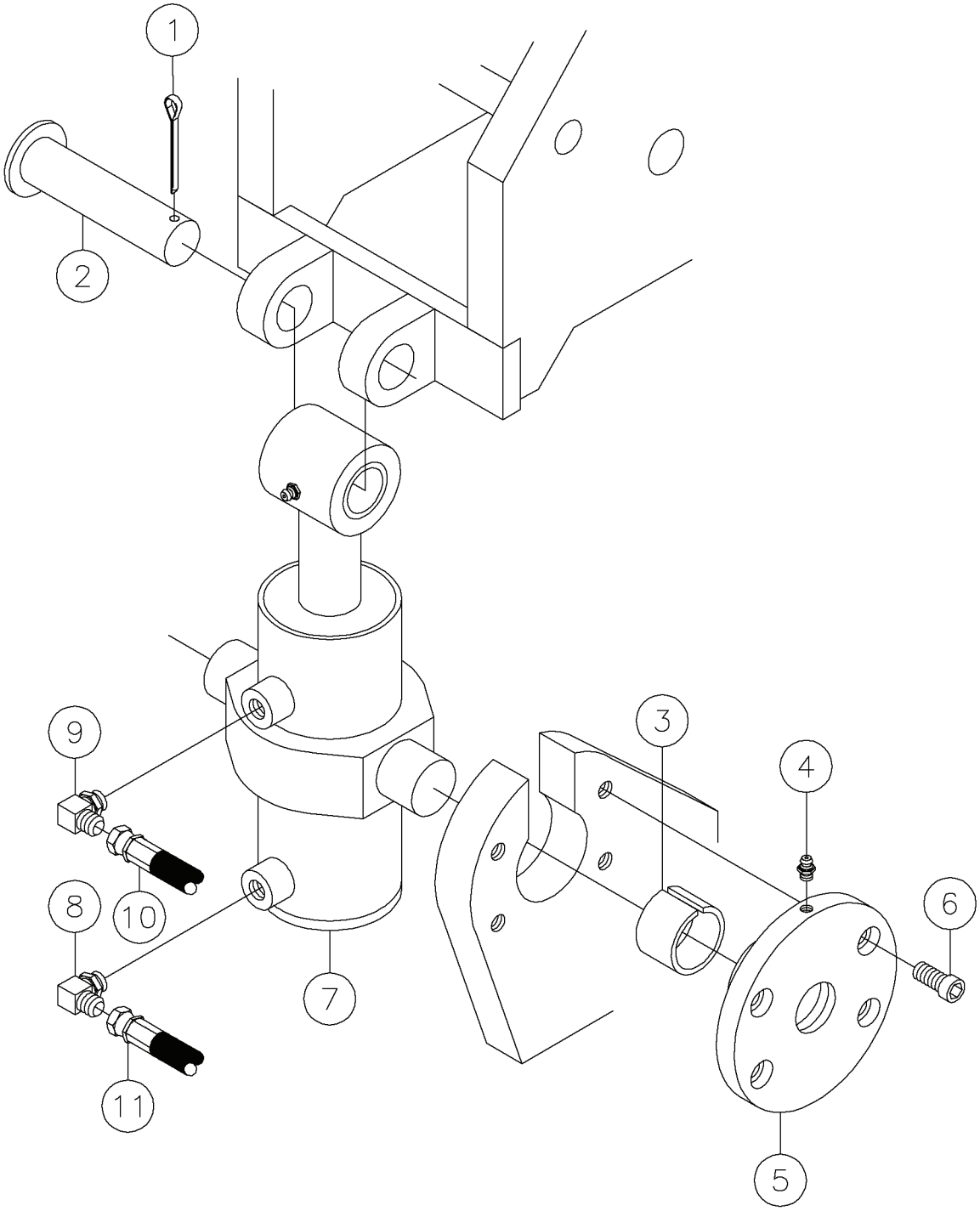

https://truckmanualshub.com/

Rotation Cylinder Assembly Fig 8-6

REF. NO.	*	PART NO.	DESCRIPTION	QTY.	REMARKS
1		510025	COTTER PIN-3/16” X 2”	1	
2		228061001	PIN-TILT	1	
3		1835025	BSHG.-STL.- 1 1/2 X 1 1/4 X 1	2	
4		598001	ZERK-1/4” NF ST GREASE	2	
5		240907001	BUSHING-TRUNNION	2	(INC REF 3 & 4)
6		601696010	SOCKET HD CAP SCREW 3/8-16X1 Z	8	
7		276260001	CYLINDER-2 1/2 X 3 3000 PSI	1	(BREAKDOWN FIG 14-35)
8		279290001	FITTNG-4MORX4MJIC 90DEG R.060	1	
9		59423001	FIT-4M JICX4M ADJ.90 DEG.ELBOW	1	
10		53843385	HOSE-1/4X20 4FS JIC 3000 PSI	1	
11		53843593	HOSE-1/4X18 4FS JIC 3000 PSI	1	

https://truckmanualshub.com/

Zap Alert Coil Assembly Fig 8-7

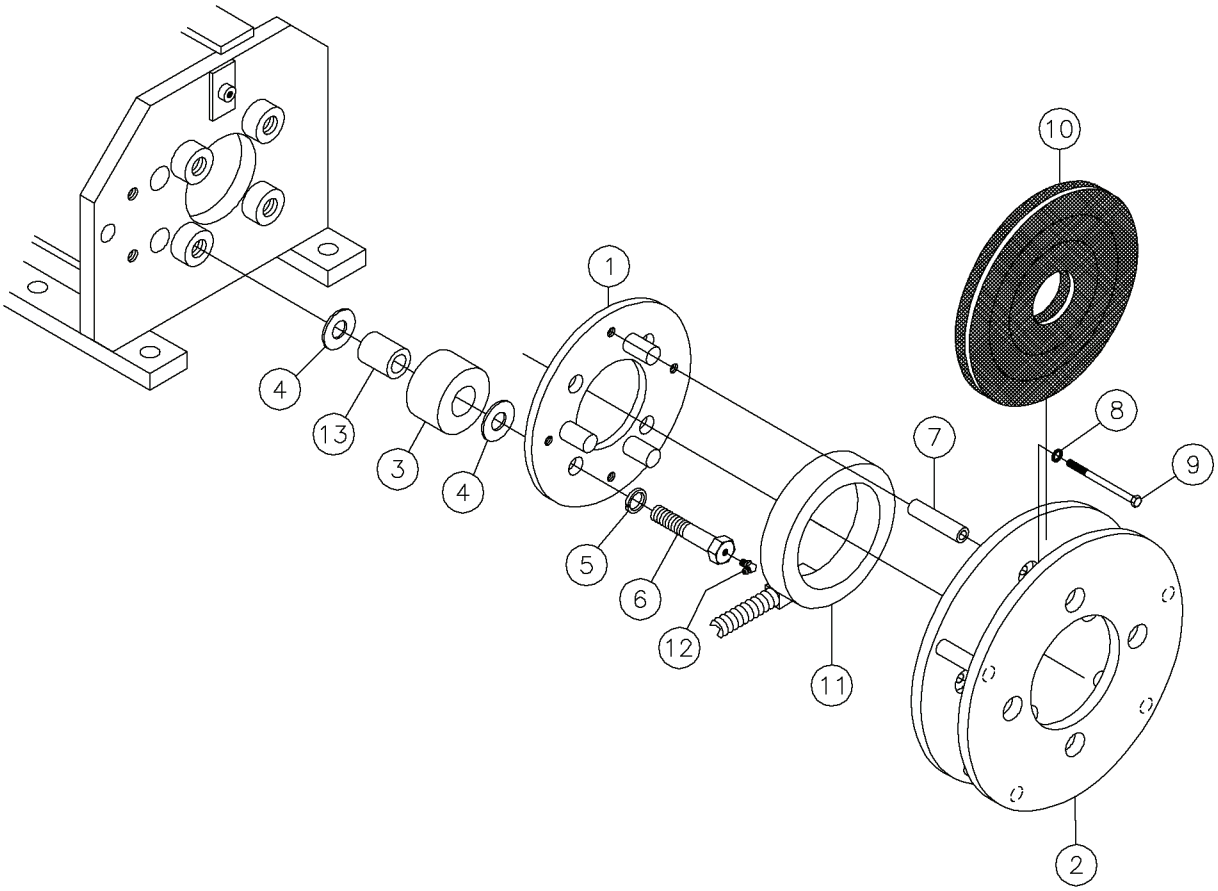

Zap Alert Coil Assembly Fig 8-7

REF. NO.	*	PART NO.	DESCRIPTION	QTY.	REMARKS
1		228051001	SUPPORT-ROLLER	1	
2		235313001	HOLDER-ROD WIPER	1	
3		244679001	ROLLER-GUIDE	4	
4		485017	WASHER-3/4 FLAT	8	
5		235717001	WASHER-3/4 FLAT HARDENED YELLOW ZINC	4	
6		235915003	BOLT ASSEMBLY-GREASE	4	(INC ONE OF REF 12)
7		1070049	TUBE-5/8ODX11GA.-2 9/16”	4	
8		235713001	WASHER-3/8 SAE HARD ZINC PLTD	4	
9		16114034	BOLT-3/8-16X3 1/2 HEX HD. GR8	4	
10		235924001	WIPER-2 3/8 OD ROD	1	
11		282517001	ZAP ALERT COIL -23’ COAX 3 WIRE	1	
12		597001	ZERK-1/4” NF 90 DEG GREASE	4	
13		244678001	BUSHING GUIDE ROLLER	4	

https://truckmanualshub.com/

Tubing Tong Assembly Fig 8-8

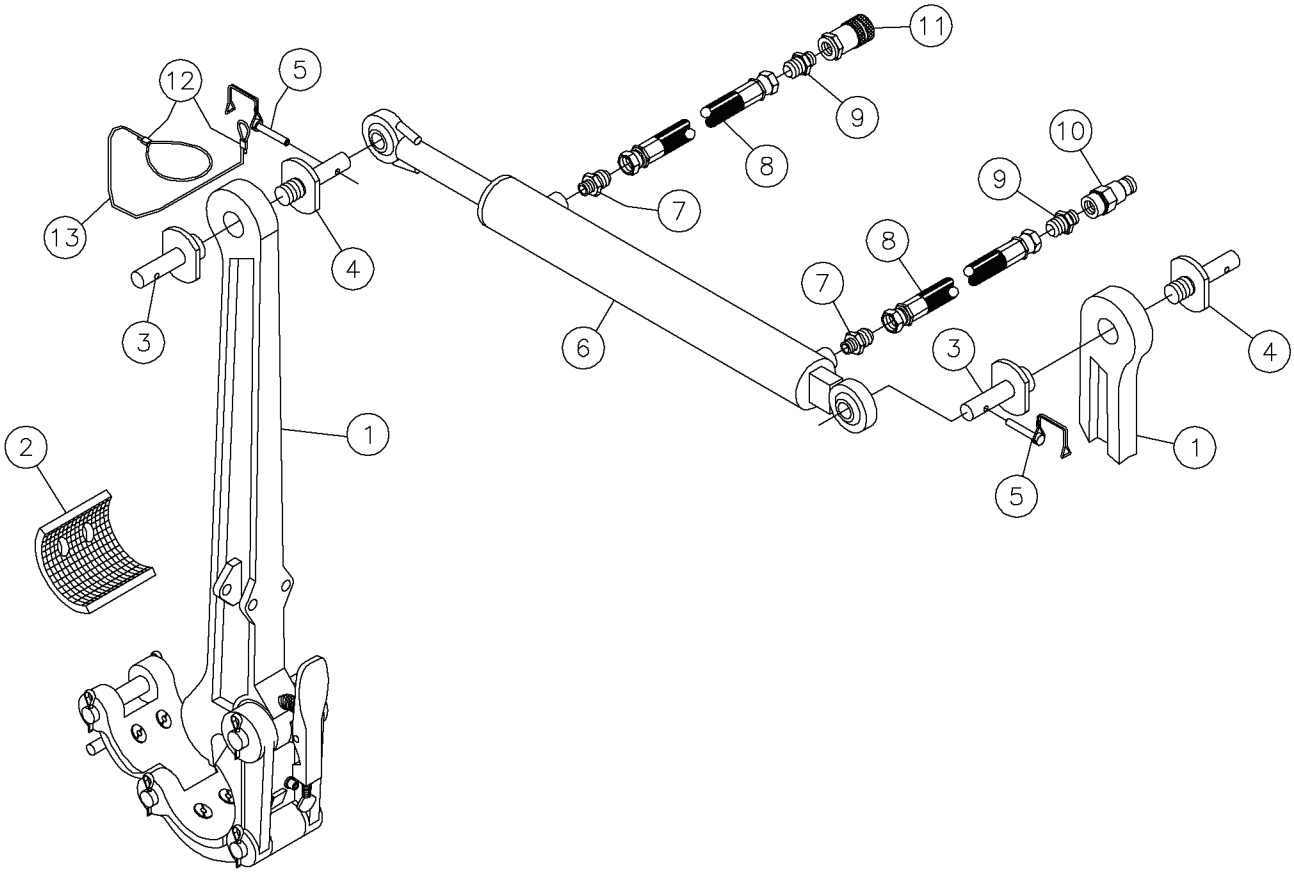

https://truckmanualshub.com/

Tubing Tong Assembly Fig 8-8

REF. NO.	*	PART NO.	DESCRIPTION	QTY.	REMARKS
1		230970001	TONG-K30 LIGHT WEIGHT TUBING	2	(BREAKDOWN FIG 14-54)
2		291546001	K-30 2-3/4” DIE SET (3/SET)	1	
3		234967001	PIN-FEMALE CYLINDER	2	
4		234966001	PIN-MALE CYLINDER	2	
5		2108001	LYNCH PIN - 1/4 X 2	2	
6		230977001	CYLINDER-2”X15 XCX	1	(BREAKDOWN FIG 14-46)
7		86235001	FITTING - 6M ORING X 8M JIC STR.	2	
8		53844167	HOSE-1/2X240 8FS JIC 3000 PSI	2	
9		68634001	FITTING-3/8MX8M JIC (STR)	2	
10		221503001	COUPLER-3/8 NPT QUICK (MALE)	1	
11		221504001	COUPLER-3/8 NPT QUICK (FEM)	1	
12		1838001	CONNECTOR-WIRE (ETC)	4	
13		240546001	CABLE-3/32 NYLON-18.00	2	

https://truckmanualshub.com/

Hydraulic Component Location Diagram-Rod Loader (15' Rack) Fig 9-1

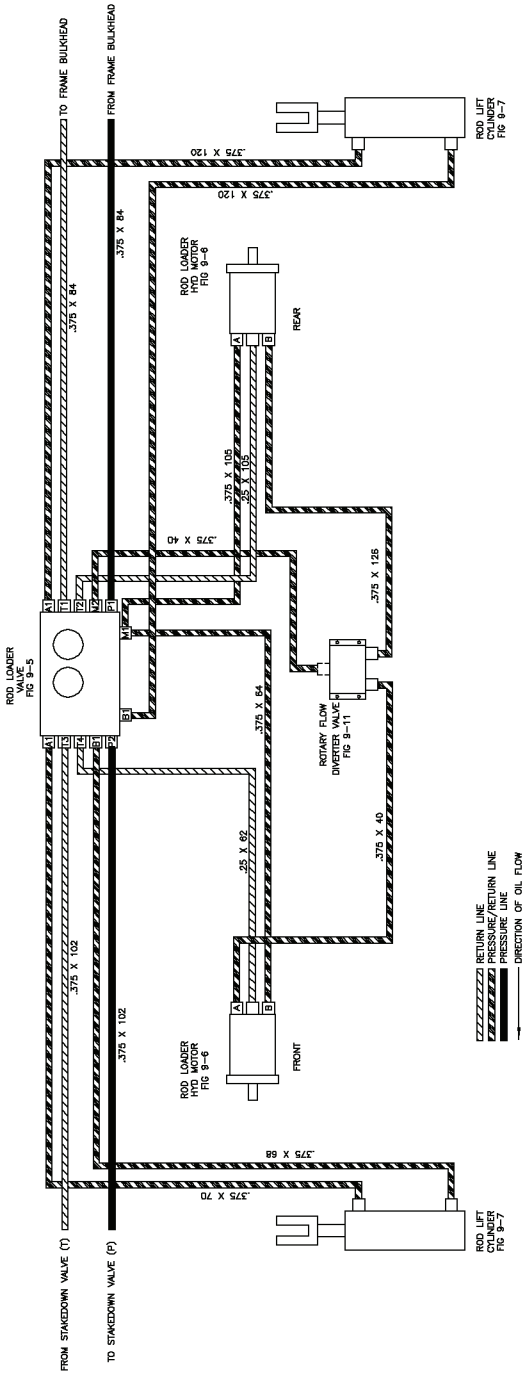

https://truckmanualshub.com/

Hydraulic Component Location Diagram-Rod Loader (15' Rack) Fig 9-1

REF. NO.	*	PART NO.	DESCRIPTION	QTY.	REMARKS

https://truckmanualshub.com/

Rod Selector Assembly (15' Rack) Fig 9-2r01

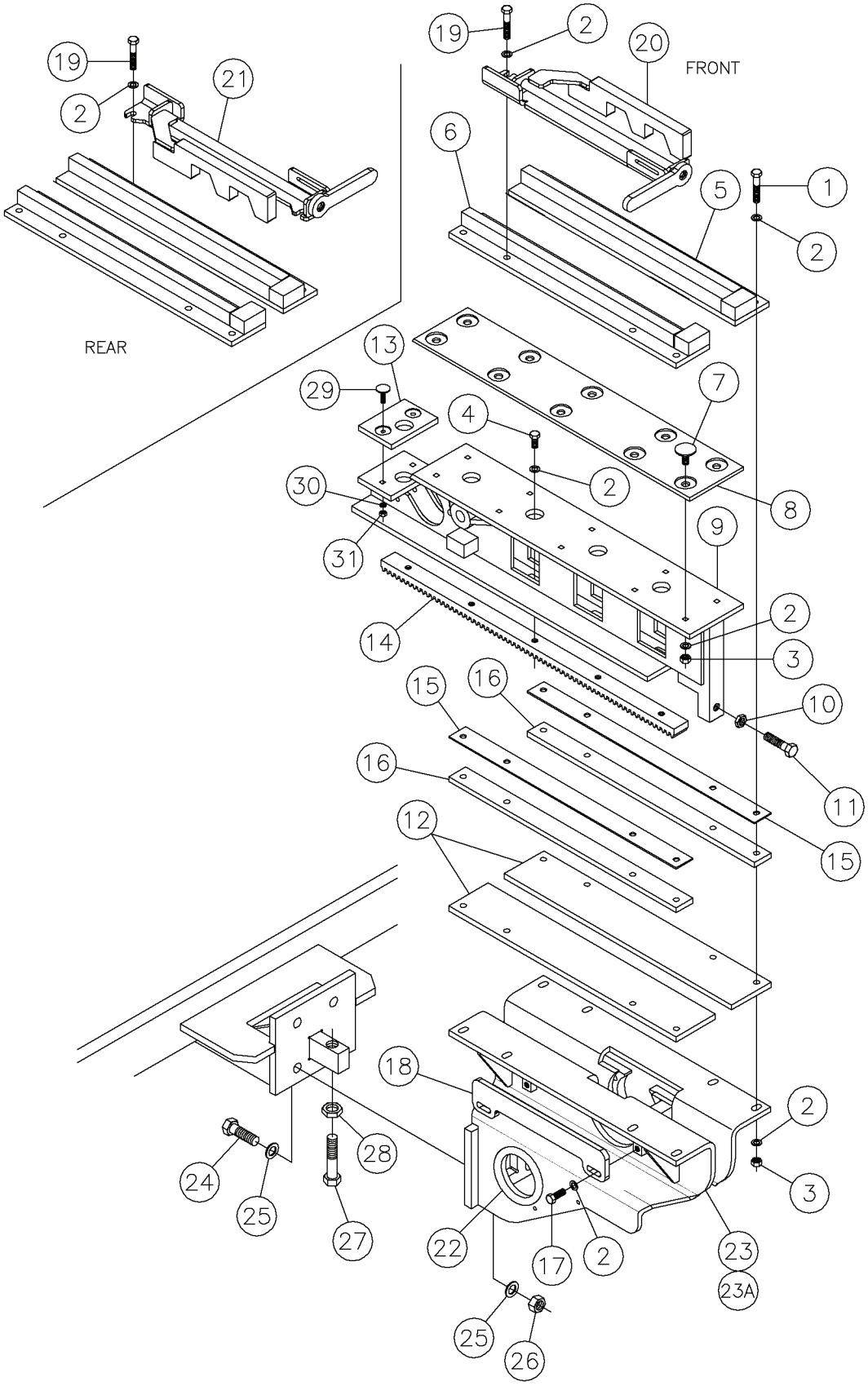

https://truckmanualshub.com/

Rod Selector Assembly (15' Rack) Fig 9-2r01

REF. NO.	*	PART NO.	DESCRIPTION	QTY.	REMARKS
		Revision Date	June, 2004		Update In Illustration & Parts List.
1		250504001	BOLT 3/8-16 X 2 1/4"GR8 HEX Y	10	
2		235713001	WASHER - FLATSTRL - .38 - .41 X .81 - .06-YA-A325	50	
3		250508001	NUT - 3/8-NC Gr8 TOP LOCK Y/ZINC	32	
4		235726001	BOLT-3/8-16X3/4 GR8 HEX ZNCPLT	10	
5		291619001	COVER - PLATE RIGHT	1	
6		291620001	COVER - PLATE LEFT	1	
7		601699012	3/8-16X1 1/4 ELEVATOR BOLT ZNC	20	
8		287624001	STRIP-WEAR	2	
9		276291003	SLIDE ASSY-ROD EXTEND/EXTRACT	2	(INC REF 10 & 11)
10		235722001	REPLACED BY 75383001	2	
11		235718001	BOLT-1/2-13X2 GR8 HEX ZINC PLT	2	
12		277140001	STRIP - PLASTIC WEAR	4	
13		277154001	BAR - WEAR	2	
14		277156001	GEAR - RACK	2	
15		250469001	SHIM - HOLD DOWN	4	
16		250473001	SPACER - HOLD DOWN	4	
17		235727001	BOLT-3/8-16X1 GR8 HEX ZINC PLT	8	
18		277238001	BAR - CLAMP	4	
19		250529001	BOLT 3/8-16X2 1/2"GR.8 HEX	6	
20		287626001	STOP - FRONT ROW SELECTOR	1	
21		287627001	STOP - REAR ROW SELECTOR	1	
22		278774001	SEAL - EDGE 1/2" STYLE	A/R	
23		276470001	D33X44 MOUNT - ROD LOADER	1	(FRONT)
23A		276471001	D33X44 MOUNT - ROD LOADER	1	(REAR)
24		250607001	REPLACED BY 145645001	8	
25		235715001	WASHER-5/8 SAE HARD ZINC PLTD	16	
26		241065001	REPLACED BY 238221001	8	
27		235747001	BOLT-5/8-11X3 GR8 HEX ZNC PLTD	2	
28		250514001	NUT -5/8NC JAM Y/ZINC	2	
29		276477001	BOLT - 1/4-20 X 1 ELEVATOR ZN PLT	4	
30		235716001	WASHER - FLATSTRL - .25 -.28 X .63 - .06 - CZ	4	
31		235732001	NUT - HEX - .25 - 20 - GR8 - YZ	4	

https://truckmanualshub.com/

Rod Selector Assembly (15' Rack) Fig 9-2

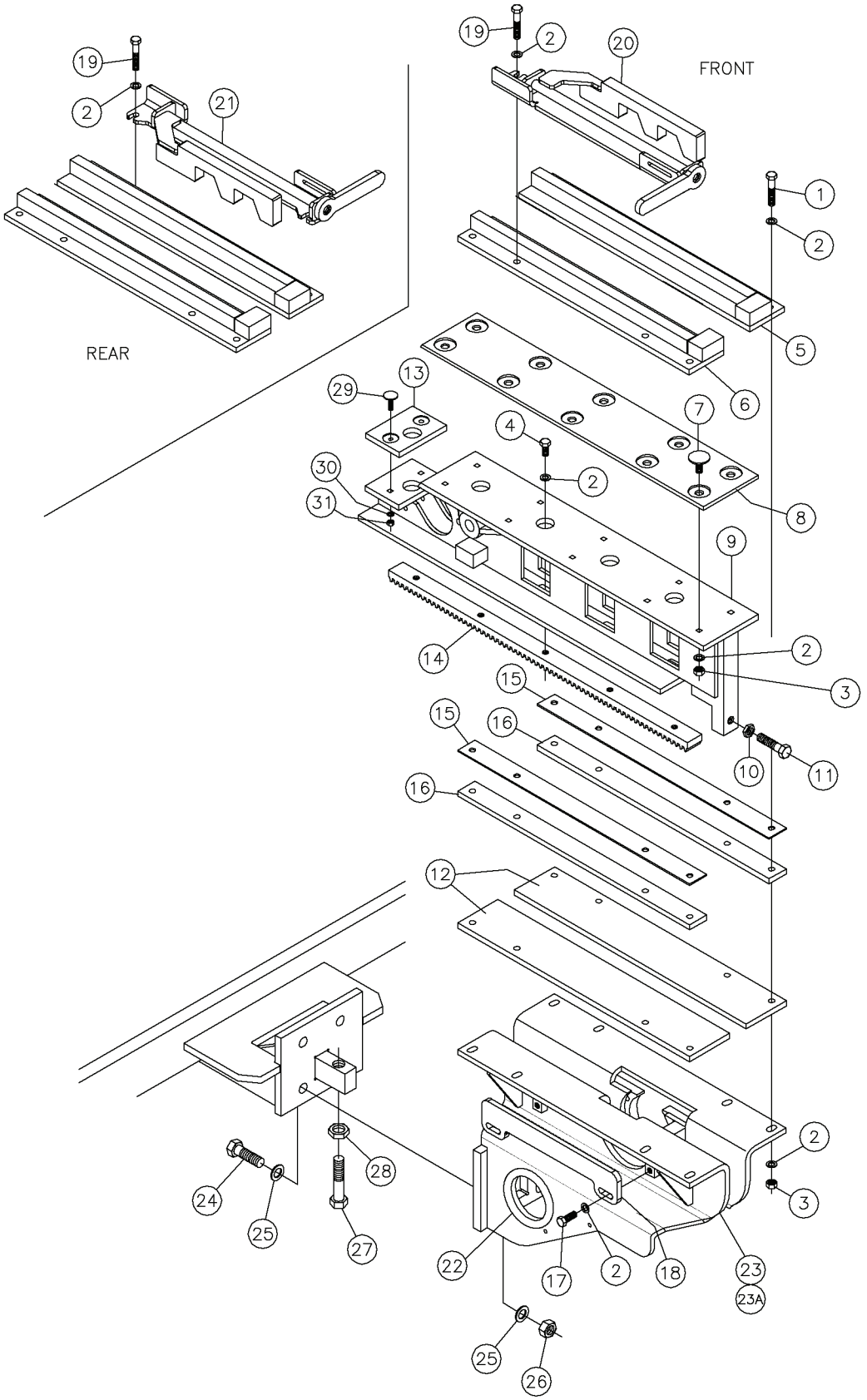

https://truckmanualshub.com/

Rod Selector Assembly (15' Rack) Fig 9-2

REF. NO.	*	PART NO.	DESCRIPTION	QTY.	REMARKS
1		250504001	BOLT 3/8-16 X 2 1/4”GR8 HEX Y	10	
2		235713001	WASHER-3/8 SAE HARD ZINC PLTD	50	
3		250508001	NUT - 3/8-NC GR8 TOP LOCK Y/ZINC	32	
4		235726001	BOLT-3/8-16X3/4 GR8 HEX ZNCPLT	10	
5		291619001	COVER - PLATE RIGHT	1	
6		291620001	COVER - PLATE LEFT	1	
7		601699012	BOLT - 3/8-16X1 1/4 ELEVATOR ZNC	20	
9		276291003	SLIDE ASSY-ROD EXTEND/EXTRACT	2	(INC REF 10 & 11)
10		235722001	REPLACED BY 75383001	2	
11		235718001	BOLT-1/2-13X2 GR8 HEX ZINC PLT	2	
12		277140001	STRIP - PLASTIC WEAR	4	
13		277154001	BAR - WEAR	2	
14		277156001	GEAR - RACK	2	
15		250469001	SHIM - HOLD DOWN	4	
16		250473001	SPACER - HOLD DOWN	4	
17		235727001	BOLT-3/8-16X1 GR8 HEX ZINC PLT	8	
18		277238001	BAR - CLAMP	4	
19		250529001	BOLT 3/8-16X2 1/2”GR.8 HEX	6	
20		287626001	STOP - FRONT ROW SELECTOR	1	
21		287627001	STOP - REAR ROW SELECTOR	1	
22		278774001	SEAL - EDGE 1/2” STYLE	A/R	
23		276470001	D33X44 MOUNT - ROD LOADER	1	(FRONT)
23A		276471001	D33X44 MOUNT - ROD LOADER	1	(REAR)
24		250607001	REPLACED BY 145645001	8	
25		235715001	WASHER-5/8 SAE HARD ZINC PLTD	16	
26		241065001	REPLACED BY 238221001	8	
27		235747001	BOLT-5/8-11X3 GR8 HEX ZNC PLTD	2	
28		250514001	NUT -5/8NC JAM Y/ZINC	2	
29		276477001	BOLT - 1/4-20 X 1 ELEVATOR ZN PLT	4	
30		235716001	WASHER-1/4 SAE HARD ZINC PLTD	4	
31		235732001	NUT-1/4-20 GR8 ZINC PLTD	4	

https://truckmanualshub.com/

Rod Loader Arm/Magnet Assembly (15' Rack) Fig 9-3r01

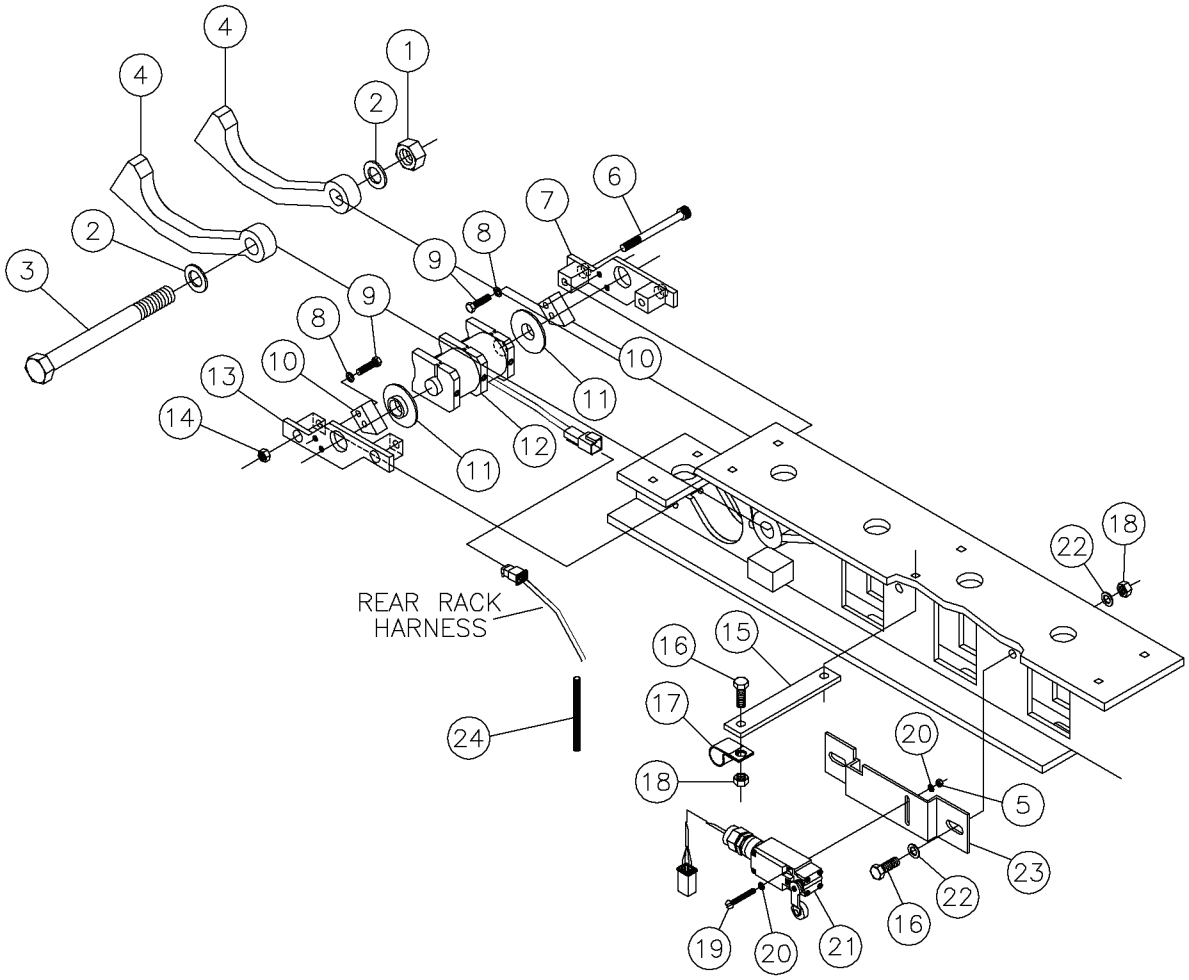

https://truckmanualshub.com/

Rod Loader Arm/Magnet Assembly (15' Rack) Fig 9-3r01

REF. NO.	*	PART NO.	DESCRIPTION	QTY.	REMARKS
		Revision Date	June, 2004		Update In Illustration & Parts List.
1		250510001	NUT 3/4 NC Gr8 SLTL Y/ZINC	2	
2		235717001	WASHER-3/4 FLAT HARDENED YELLOW ZINC	4	
3		240344001	BOLT-3/4-10X7 1/2 GR#8 ZINC PL	2	
4		277147001	ARM -LOADER	4	
5		69759001	LOCK NUT-#8-32 NYLON INSERT PL	2	
6		276427001	SCREW-5/16-18X3 1/2 SHC GD8 YZ	4	
7		276425001	MOUNT - MAGNET RIGHT SIDE	1	
8		235716001	WASHER - FLATSTRL - .25 -.28 X .63 - .06 - CZ	8	
9		235735001	BOLT-1/4-20X1 GR8 HEX ZNC PLTD	8	
10		276417001	STOP - MAGNET	4	
11		276420001	WASHER - MAGNET SHIM	4	
12		276315001	MAGNET - ELECTRO COIL	2	
13		276424001	MOUNT - MAGNET LEFT SIDE	1	
14		235741001	NUT - HEX - .31 - 18 - GR8 -YZ	4	
15		276462001	BAR - WIRE HARNESS GUARD	2	
16		235727001	BOLT-3/8-16X1 GR8 HEX ZINC PLT	4	
17		2595001	HOSE CLAMP - TS7FR 1/2" REF T15802	2	
18		250508001	NUT - 3/8-NC Gr8 TOP LOCK Y/ZINC	2	
19		144654001	SCREW-#8-32 X 1 1/2 STOVE	2	
20		224769001	WASHER-#8 FLAT	4	
21		276467001	SWITCH - LIMIT NO/NC LEVER/ROLLER	1	
22		235713001	WASHER - FLATSTRL - .38 - .41 X .81 - .06-YA-A325	4	
23		276468001	PLATE - SWITCH BRACKET	1	
24		86318001	LOOM-FLEX GARD HI TEMP 1/4 ID	A/R	(SPECIFY LENGTH)

https://truckmanualshub.com/

Rod Loader Arm/Magnet Assembly (15' Rack) Fig 9-3

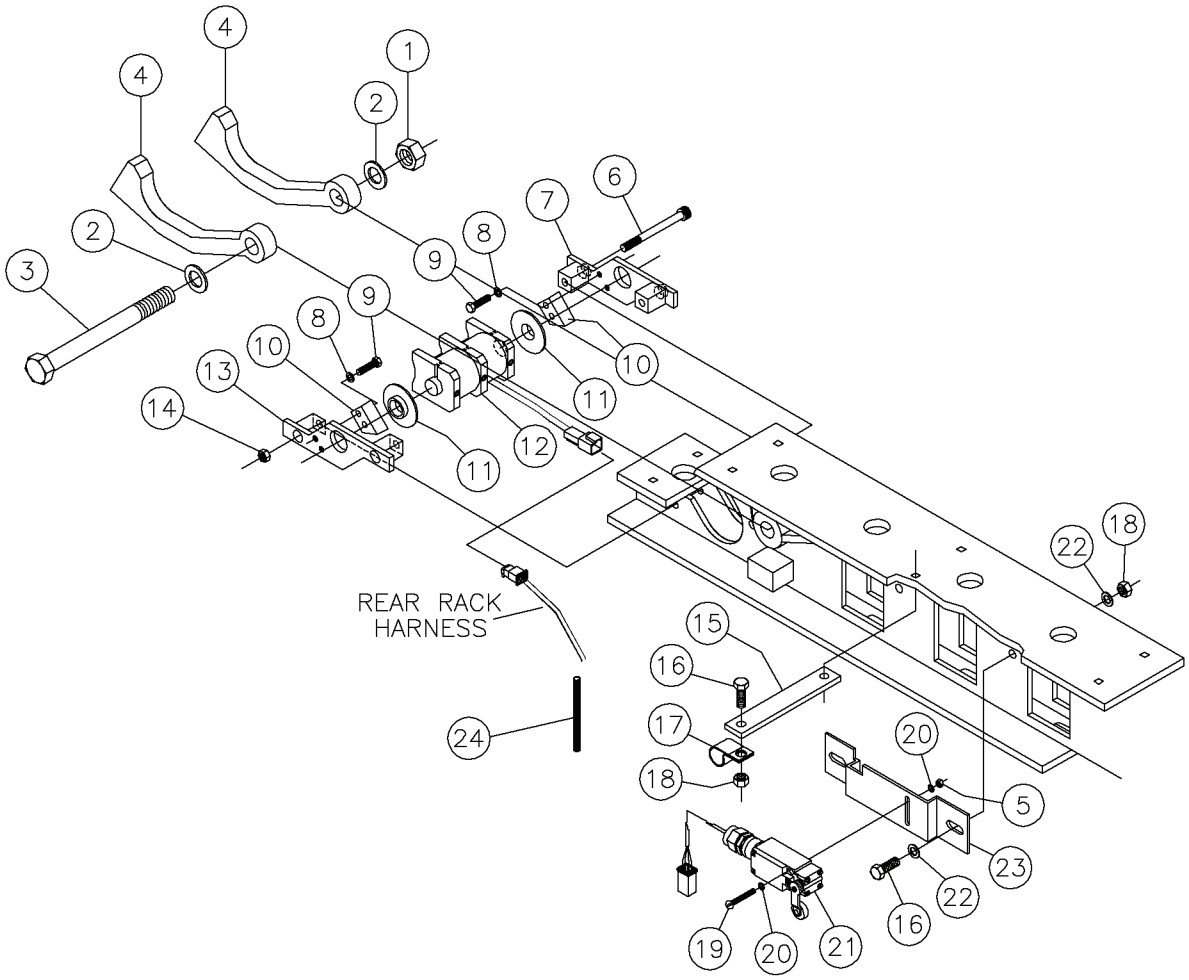

https://truckmanualshub.com/

Rod Loader Arm/Magnet Assembly (15' Rack) Fig 9-3

REF. NO.	*	PART NO.	DESCRIPTION	QTY.	REMARKS
1		250510001	NUT 3/4 NC GR8 SLTL Y/ZINC	2	
2		235717001	WASHER-3/4 FLAT HARDENED YELLOW ZINC	4	
3		240344001	BOLT-3/4-10X7 1/2 GR#8 ZINC PL	2	
4		277147001	ARM -LOADER	4	
5		69759001	LOCK NUT-#8-32 NYLON INSERT PL	2	
6		276427001	SCREW-5/16-18X3 1/2 SHC GD8 YZ	4	
7		276424001	MOUNT - MAGNET LEFT SIDE	1	
8		235716001	WASHER-1/4 SAE HARD ZINC PLTD	8	
9		235735001	BOLT-1/4-20X1 GR8 HEX ZNC PLTD	8	
10		276417001	STOP - MAGNET	4	
11		276420001	WASHER - MAGNET SHIM	4	
12		276315001	MAGNET - ELECTRO COIL	2	
13		276425001	MOUNT - MAGNET RIGHT SIDE	1	
14		235741001	NUT-5/16-18 GR8 ZINC PLTD	4	
15		276462001	BAR - WIRE HARNESS GUARD	2	
16		235727001	BOLT-3/8-16X1 GR8 HEX ZINC PLT	4	
17		2595001	HOSE CLAMP - TS7FR 1/2”	2	
18		250508001	NUT - 3/8-NC GR8 TOP LOCK Y/ZINC	2	
19		144654001	SCREW-#8-32 X 1 1/2 STOVE	2	
20		224769001	WASHER-#8 FLAT	4	
21		276467001	SWITCH - LIMIT NO/NC LEVER/ROLLER	1	
22		235713001	WASHER-3/8 SAE HARD ZINC PLTD	4	
23		276468001	PLATE - SWITCH BRACKET	1	
24		86318001	LOOM-FLEX GARD HI TEMP 1/4 ID	A/R	(SPECIFY LENGTH)

https://truckmanualshub.com/

Rod Loader Guard Assembly (15' Rack) Fig 9-4

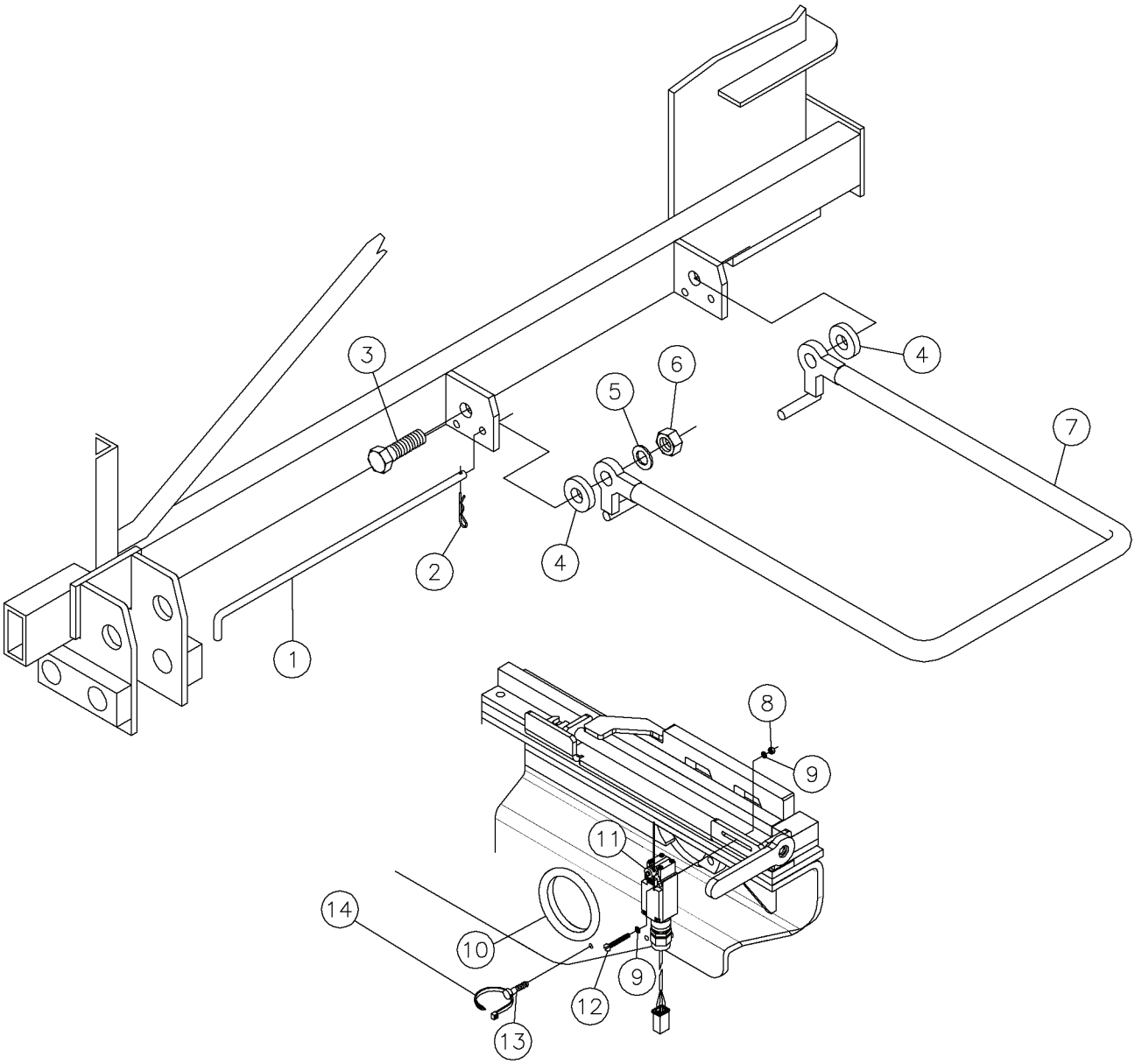

https://truckmanualshub.com/

Rod Loader Guard Assembly (15' Rack) Fig 9-4

REF. NO.	*	PART NO.	DESCRIPTION	QTY.	REMARKS
1		276466001	BAR - ARM PIN	2	
2		1794007	HAIR PIN COTTER - .080 WIRE	2	
3		238880001	BOLT-3/4-10X2 1/2 HHCS GR8 ZY	4	
4		276465001	TUBE - ARM SPACER	4	
5		235717001	WASHER-3/4 FLAT HARDENED YELLOW ZINC	4	
6		250510001	NUT 3/4 NC GR8 SLTL Y/ZINC	2	
7		276463001	ARM - SAFETY GUARD	2	
8		69759001	LOCK NUT-#8-32 NYLON INSERT PL	4	
9		485001	WASHER-3/16 FLAT	8	
10		278774001	SEAL - EDGE 1/2” STYLE	A/R	
11		281844001	SWITCH - LIMIT NO/NC LEVER	2	
12		144654001	SCREW-#8-32 X 1 1/2 STOVE	4	
13		278953001	ANCHOR - CABLE TIE	2	
14		59634001	NYTIE - 8”	2	

https://truckmanualshub.com/

Rod Loader Valve Assembly (15' Rack) Fig 9-5

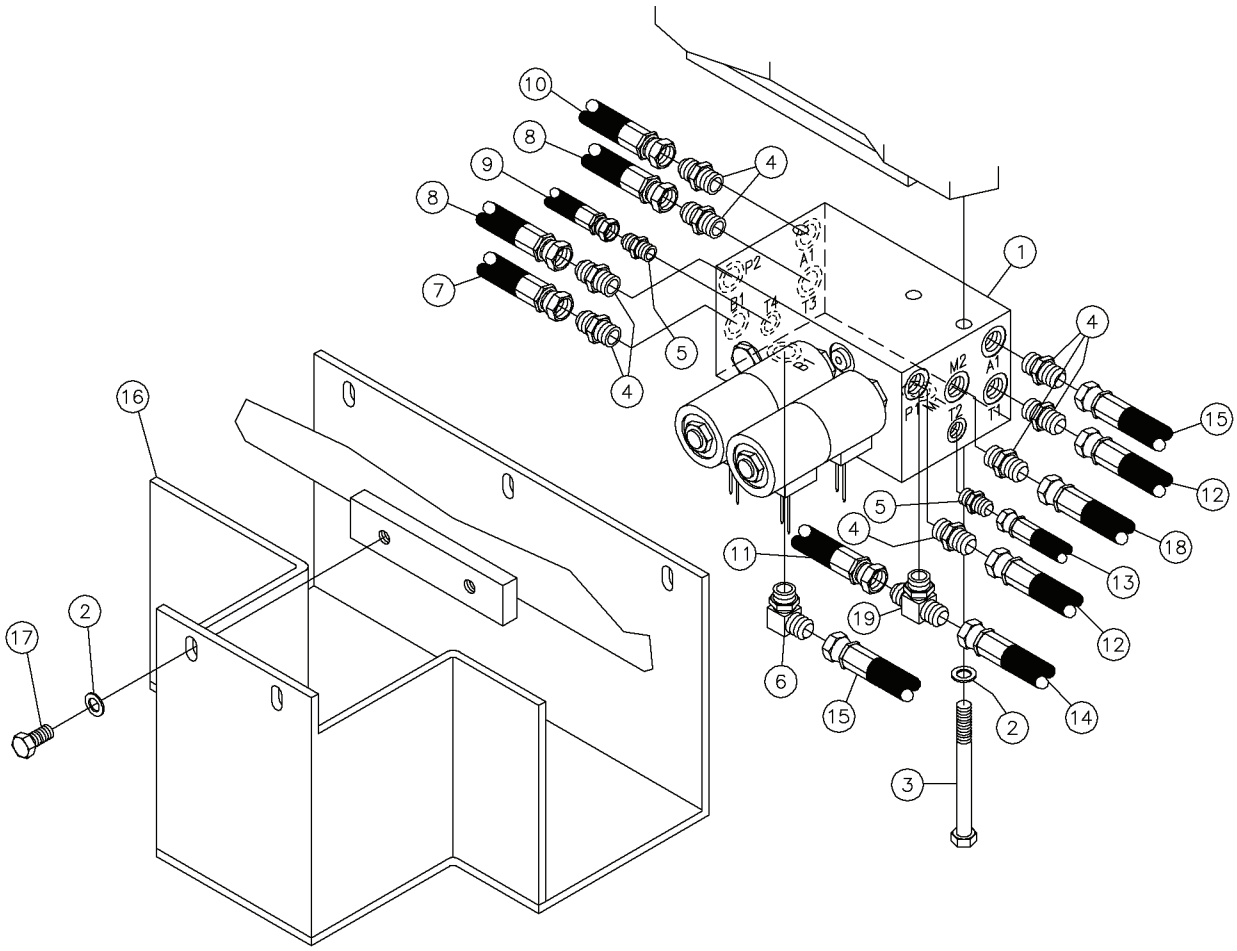

https://truckmanualshub.com/

Rod Loader Valve Assembly (15' Rack) Fig 9-5

REF. NO.	*	PART NO.	DESCRIPTION	QTY.	REMARKS
1		278859001	VALVE - ROD LOADER	1	(BREAKDOWN FIG 14-20)
2		235713001	WASHER-3/8 SAE HARD ZINC PLTD	8	
3		250541001	BOLT-3/8-16 X 4” GR8 HEX Y/ZI	3	
4		65565001	FITTING - 6M O-RING X 6M JIC ST.	8	
5		60908001	FITTING-4MX4M JIC STR ADAPTER	2	
6		59426001	FITTING - 6M JIC X 6M O-RING ADJ 90 ELBOW	1	
7		57940543	HOSE-3/8X70 6FS 3000 PSI	1	
8		57940299	HOSE-3/8X102 6FS JIC 3000 PSI	2	
9		53843711	HOSE-1/4X62 4FS JIC 3000 PSI	1	
10		57940161	HOSE-3/8X68-6FS JIC 3000 PSI	1	
11		57940239	HOSE-3/8X64 6FS JIC 3000PSI	1	
12		279086001	HOSE -3/8X84 6FS/90 JIC 3000PSI	2	
13		53843749	HOSE-1/4X105 4FSJICST/ST 3000#	1	
14		279141001	HOSE - 3/8” X 105” 6FSJIC ST/ST M3K	1	
15		57940285	HOSE-3/8X120 6FS JIC 3000 PSI	2	
16		279089001	COVER - VALVE BRACKET	1	
17		235726001	BOLT-3/8-16X3/4 GR8 HEX ZNCPLT	5	
18		57940281	HOSE-3/8X40 6FS JIC 3000 PSI	1	
19		68787001	FITTING-6M (BCH)X6M JICX6M JIC	1	

https://truckmanualshub.com/

Rod Loader Motor Assembly (15' Rack) Fig 9-6

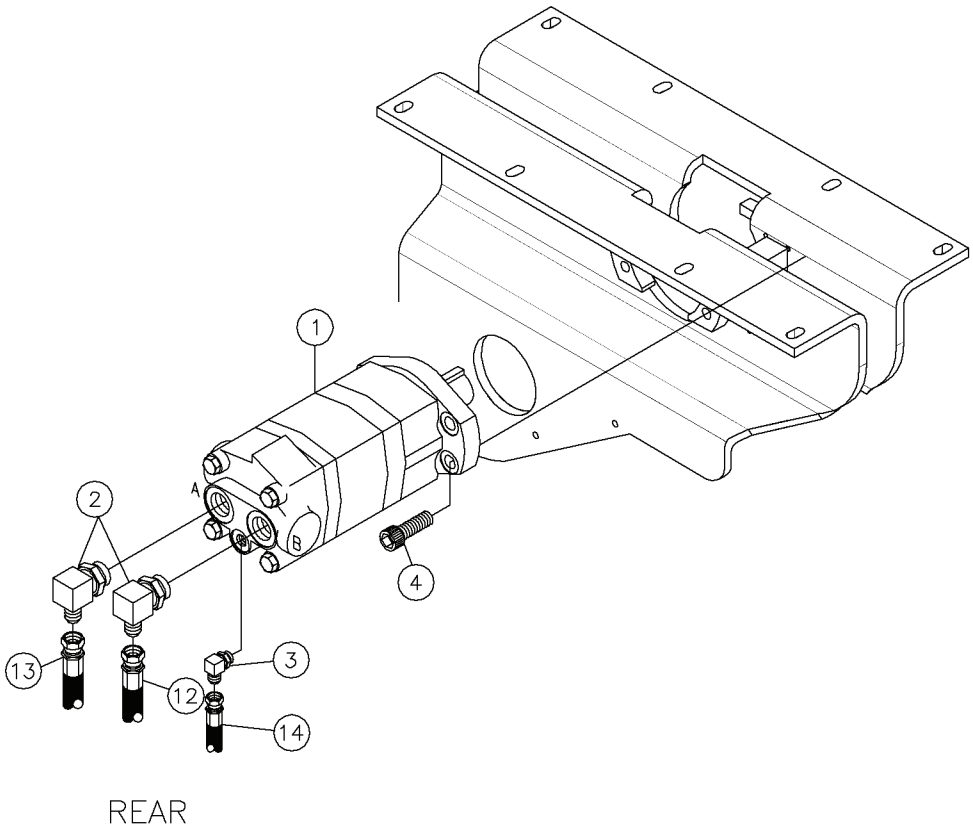

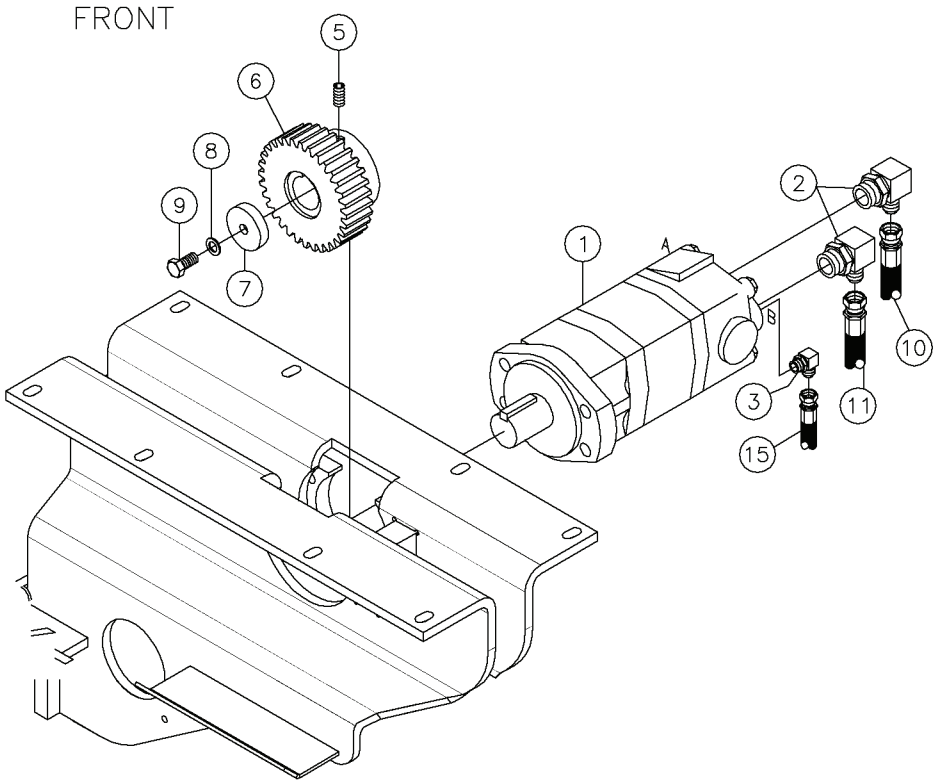

https://truckmanualshub.com/

Rod Loader Motor Assembly (15' Rack) Fig 9-6

REF. NO.	*	PART NO.	DESCRIPTION	QTY.	REMARKS
1		246413001	MOTOR- HYD 2000	2	(BREAKDOWN FIG 14-8)
2		59401001	FITTING - 6M JICX10M ADJ. 90 DEG.ELBOW	4	
3		59423001	FIT-4M JICX4M ADJ.90 DEG.ELBOW	2	
4		276402001	SCREW-1/2-13X1 1/2 SHC Y ZINC	4	
5		526003	SSS-3/8-16X3/4	2	
6		246356001	GEAR - 8 DP 32 T	2	
7		285603001	WASHER - FLAT	2	
8		235713001	WASHER-3/8 SAE HARD ZINC PLTD	2	
9		235726001	BOLT-3/8-16X3/4 GR8 HEX ZNCPLT	2	
10		57940281	HOSE-3/8X40 6FS JIC 3000 PSI	1	
11		57940239	HOSE-3/8X64 6FS JIC 3000PSI	1	
12		57940487	HOSE-3/8X126-6FS JIC 3000 PSI	1	
13		279141001	HOSE - 3/8” X 105” 6FSJIC ST/ST M3K	1	
14		53843749	HOSE-1/4X105 4FSJICST/ST 3000#	1	
15		53843711	HOSE-1/4X62 4FS JIC 3000 PSI	1	

https://truckmanualshub.com/

Rod Lift Cylinder Assembly (15' Rack) Fig 9-7

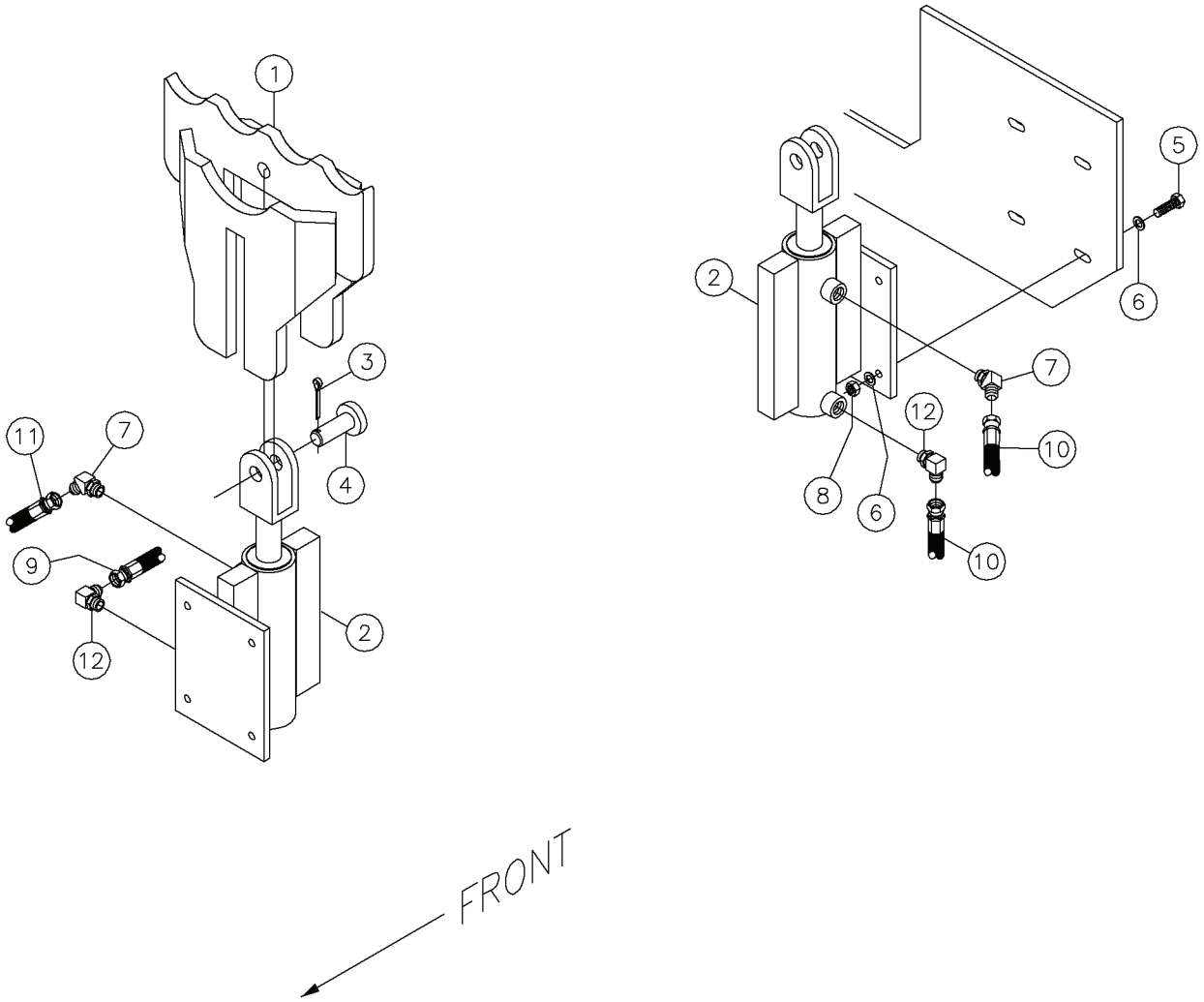

https://truckmanualshub.com/

Rod Lift Cylinder Assembly (15' Rack) Fig 9-7

REF. NO.	*	PART NO.	DESCRIPTION	QTY.	REMARKS
1		276428001	LIFT - ROD	2	
2		250494001	CYLINDER - 2 X 5”	2	(BREAKDOWN FIG 14-36)
3		510047	PIN - 3/16 X 1 1/4 COTTER	2	
4		222815001	PIN-STEER CYLINDER	2	
5		235723001	BOLT-3/8-16X1 1/2 GR8 ZINC PLT	8	
6		235713001	WASHER-3/8 SAE HARD ZINC PLTD	16	
7		65563001	FITTING - 6M O-RING X 6M JIC 45 DEGREE	2	
8		250508001	NUT - 3/8-NC GR8 TOP LOCK Y/ZINC	8	
9		57940161	HOSE-3/8X68-6FS JIC 3000 PSI	1	
10		57940285	HOSE-3/8X120 6FS JIC 3000 PSI	2	
11		57940543	HOSE-3/8X70 6FS 3000 PSI	1	
12		122606001	FITTING-6MX6M JIC90 DEGW/ RSTS	2	

https://truckmanualshub.com/

Rod Box Assembly (600') (15' Rack) Fig 9-8

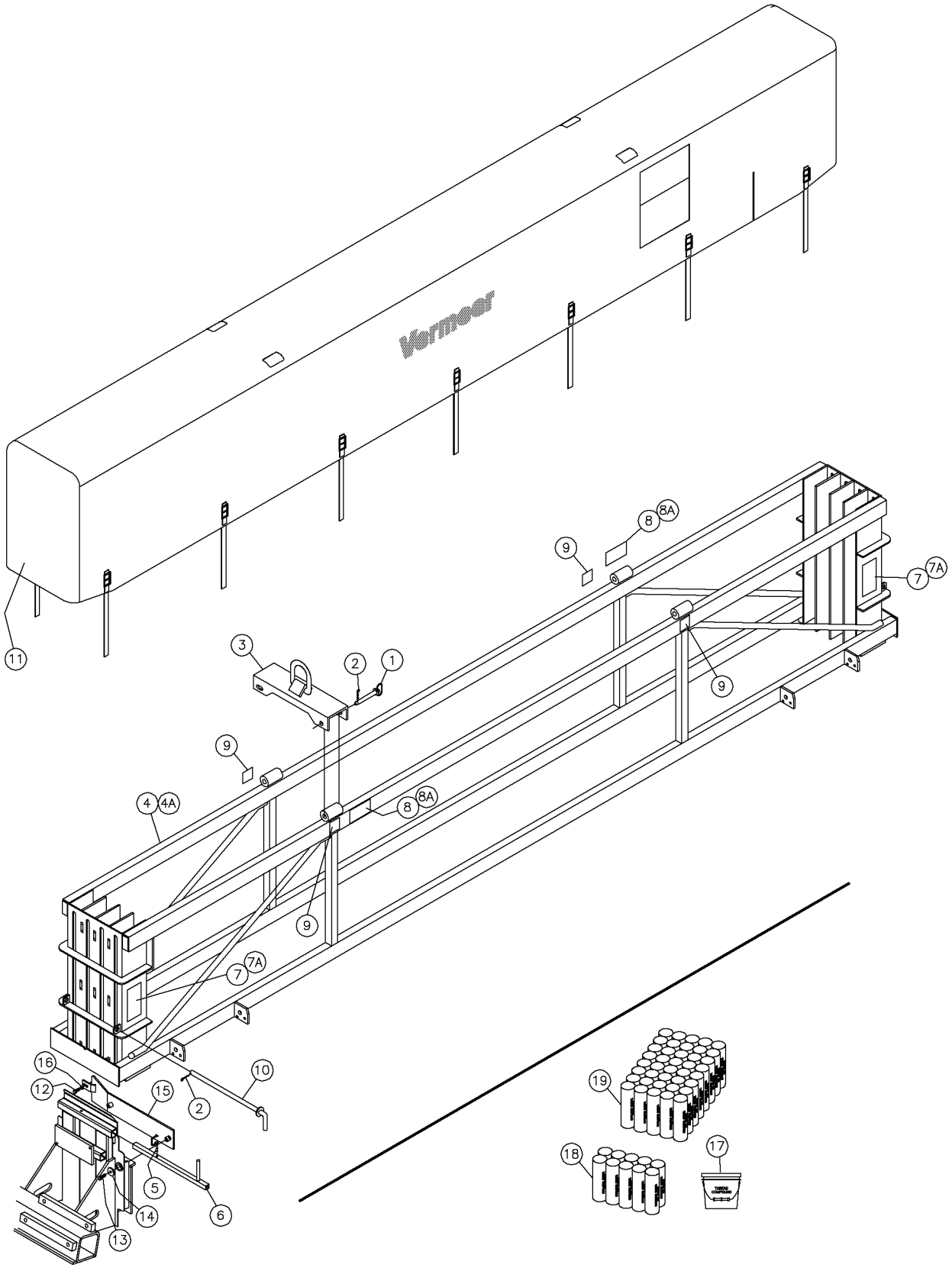

https://truckmanualshub.com/

Rod Box Assembly (600') (15' Rack) Fig 9-8

REF. NO.	*	PART NO.	DESCRIPTION	QTY.	REMARKS
1		2107007	PIN-HITCH 3/4 X 6	4	
2		1794003	HAIR PIN COTTER - .148 WIRE	6	
3		276378001	KEEPER - TOP ROD BOX	2	
4		276345003	BOX ASSEMBLY-ROD (600') (DOMESTIC)	1	(INC TWO OF REF 7, 8, 9)
4A		276345005	BOX ASSEMBLY-ROD (600') (INTERNATIONAL)	1	(INC TWO OF REF 7A, 8A, 9)
5		2108001	LYNCH PIN - 1/4 X 2	2	
6		276404001	PIN - ROD BOX	2	
7		7000A627	DECAL-DANGER	2	
7A		700IA627	DECAL-DANGER	2	
8		70000563	DECAL-WARNING (UND)	2	
8A		7000I563	DECAL-WARNING (UND)	2	
9		7000I445	DECAL-LIFT POINT	4	
10		281805001	PIN - ROD KEEPER	2	
11		287668001	COVER - D33 X 44 TALL ROD BOX	1	REPLACES 276481001
12		235727001	BOLT-3/8-16X1 GR8 HEX ZINC PLT	1	
13		235736001	BOLT-3/8-16X1 1/4 ZINC PLTD	2	
14		277206001	WASHER - FLAT	2	
15		277241001	PLATE - FRONT SLIDE	1	
16		235713001	WASHER-3/8 SAE HARD ZINC PLTD	1	
17		235983001	THRD CMPD-PLUSCO 135 HT CU 13#	A/R	
18		275927982	THRD CMPND - PLUSCO 135 - 10 PACK	A/R	
19		275928982	THRD CMPND - PLUSCO 135 - 4/10 PACK	A/R	

https://truckmanualshub.com/

Rod Box Assembly (300') (15' Rack) Fig 9-9

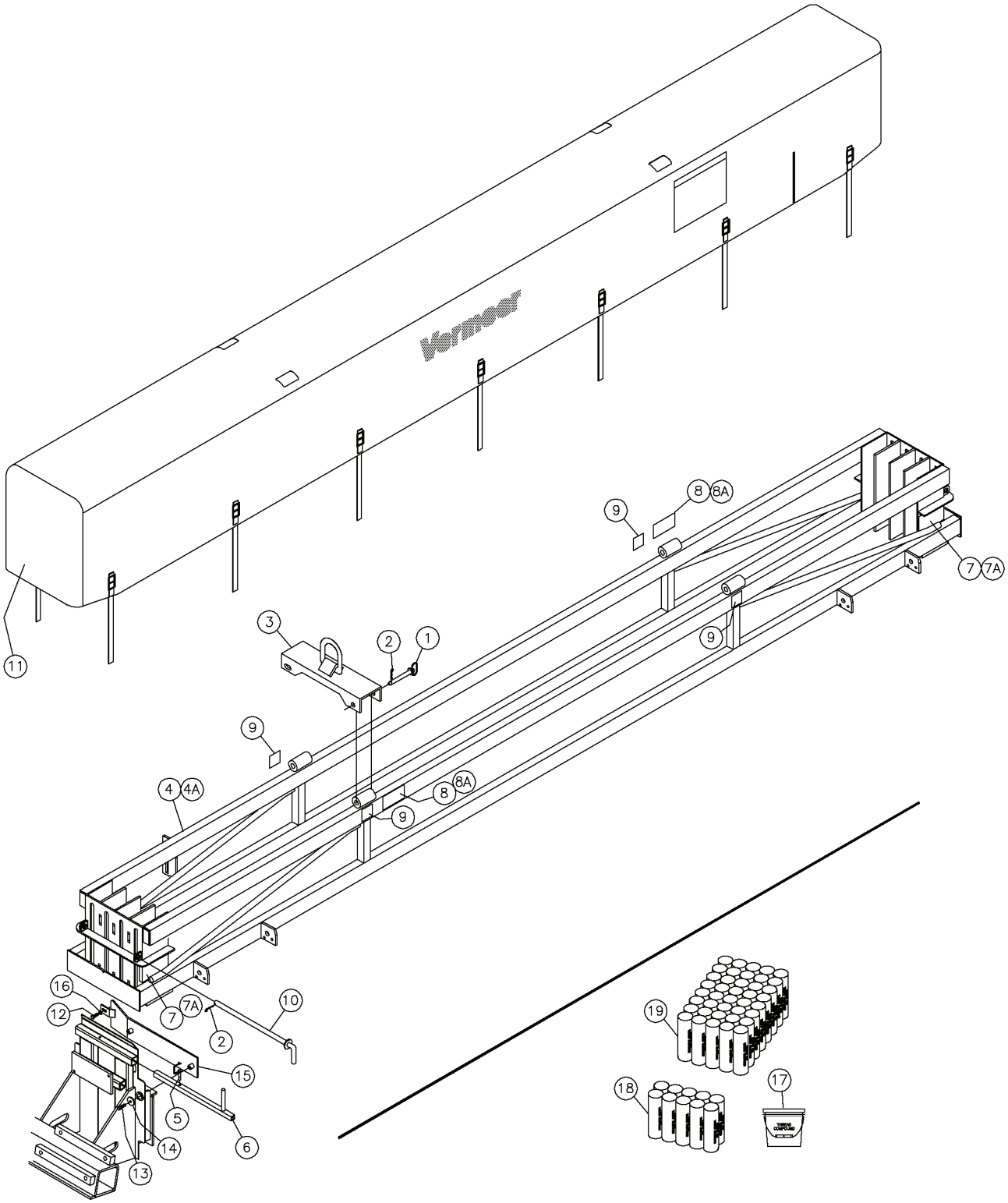

https://truckmanualshub.com/

Rod Box Assembly (300') (15' Rack) Fig 9-9

REF. NO.	*	PART NO.	DESCRIPTION	QTY.	REMARKS
1		2107007	PIN-HITCH 3/4 X 6	4	
2		1794003	HAIR PIN COTTER - .148 WIRE	6	
3		276378001	KEEPER - TOP ROD BOX	2	
4		281776003	ROD BOX ASSEMBLY	1	(INC TWO OF REF 7, 8, 9)
4A		281776005	BOX ASSEMBLY - ROD (300') (INTERNATIONAL)	1	(INC TWO OF REF 7A, 8A, 9)
5		2108001	LYNCH PIN - 1/4 X 2	2	
6		276404001	PIN - ROD BOX	2	
7		7000A576	DECAL-DANGER	2	
7A		700IA576	DECAL-DANGER	2	
8		70000563	DECAL-WARNING (UND)	2	
8A		7000I563	DECAL-WARNING (UND)	2	
9		7000I445	DECAL-LIFT POINT	4	
10		281805001	PIN - ROD KEEPER	2	
11		287684001	COVER - D33X44 SMALL ROD BOX	1	REPLACES 285585001
12		235727001	BOLT-3/8-16X1 GR8 HEX ZINC PLT	1	
13		235736001	BOLT-3/8-16X1 1/4 ZINC PLTD	2	
14		277206001	WASHER - FLAT	2	
15		277241001	PLATE - FRONT SLIDE	1	
16		235713001	WASHER-3/8 SAE HARD ZINC PLTD	1	
17		235983001	THRD CMPD-PLUSCO 135 HT CU 13#	A/R	
18		275927982	THRD CMPND - PLUSCO 135 - 10 PACK	A/R	
19		275928982	THRD CMPND - PLUSCO 135 - 4/10 PACK	A/R	

https://truckmanualshub.com/

Wire Harness Carrier Assembly (15' Rack) Fig 9-10

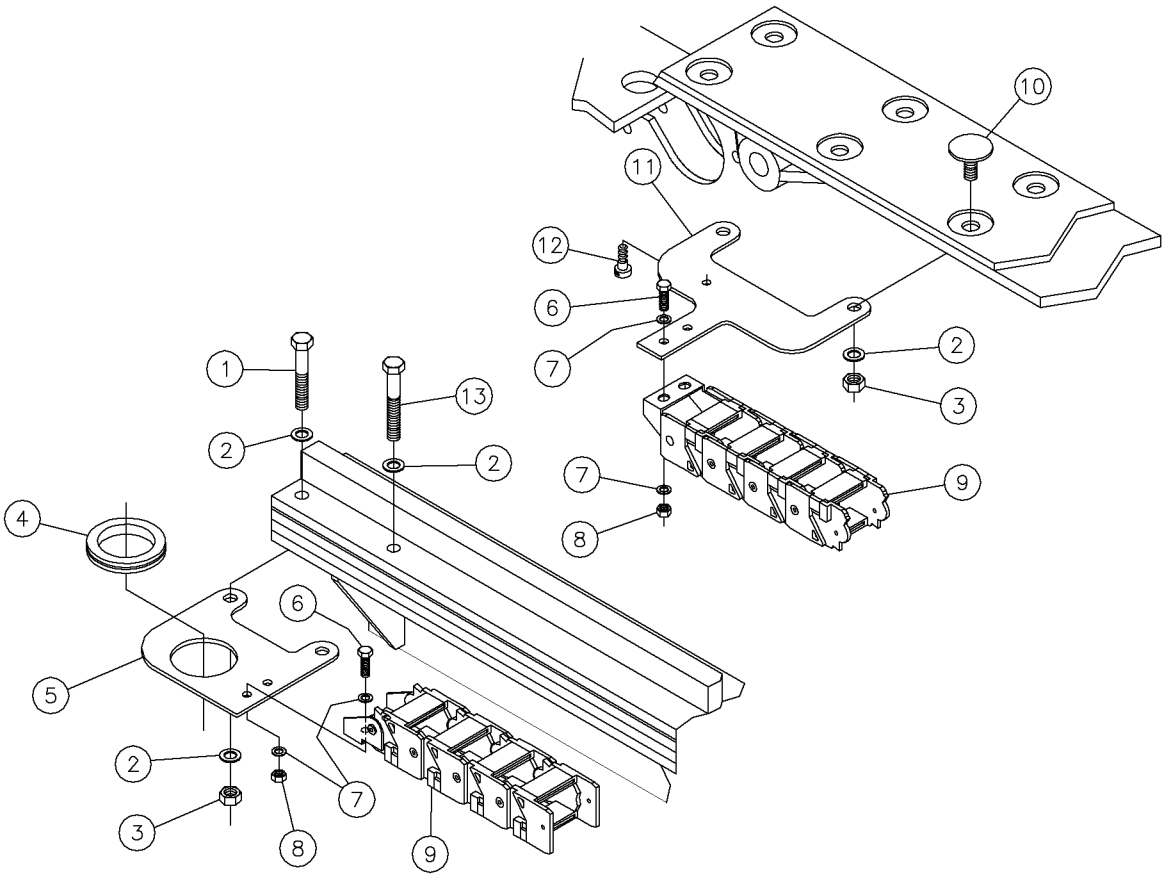

https://truckmanualshub.com/

Wire Harness Carrier Assembly (15' Rack) Fig 9-10

REF. NO.	*	PART NO.	DESCRIPTION	QTY.	REMARKS
1		250504001	BOLT 3/8-16 X 2 1/4”GR8 HEX Y	2	
2		235713001	WASHER-3/8 SAE HARD ZINC PLTD	12	
3		250508001	NUT - 3/8-NC GR8 TOP LOCK Y/ZINC	4	
4		902401001	GROMMET-1 45/64”RUBBER	2	
5		281809001	BRACKET - WIRE TRACK	2	
6		235734001	BOLT-1/4-20X3/4 GR8 ZINC PLTD	8	
7		235716001	WASHER-1/4 SAE HARD ZINC PLTD	16	
8		235732001	NUT-1/4-20 GR8 ZINC PLTD	8	
9		281811001	POWERTRAK - NYLON	2	
10		601699012	BOLT - 3/8-16X1 1/4 ELEVATOR ZNC	4	
11		281807001	BRACKET - WIRE TRACK	2	
12		278953001	ANCHOR - CABLE TIE	2	
13		250529001	BOLT 3/8-16X2 1/2”GR.8 HEX	2	

https://truckmanualshub.com/

Hydraulic Assembly - Flow Divider (15' Rack) Fig 9-11

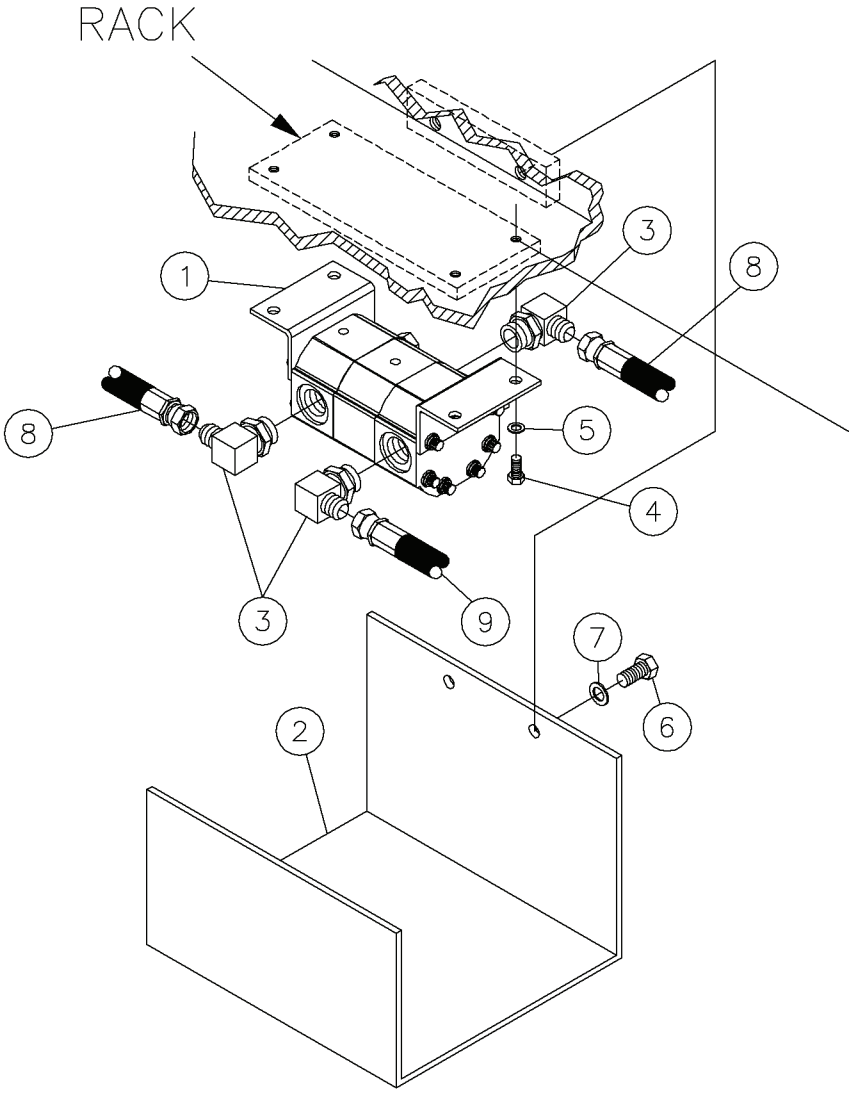

https://truckmanualshub.com/

Hydraulic Assembly - Flow Divider (15' Rack) Fig 9-11

REF. NO.	*	PART NO.	DESCRIPTION	QTY.	REMARKS
1		294789001	FLOW DIVIDER - ROTARY 1300634	1	
2		294559001	PLATE-FLOW DIVIDER COVER	1	
3		57954001	FITTING-8M X 6M JIC 90 DEGS	3	
4		235733001	BOLT-1/4-20X1/2 GR8 ZINC PLTD	4	
5		235716001	WASHER-1/4 SAE HARD ZINC PLTD	4	
6		235726001	BOLT-3/8-16X3/4 GR8 HEX ZNCPLT	2	
7		235713001	WASHER-3/8 SAE HARD ZINC PLTD	2	
8		57940281	HOSE-3/8X40 6FS JIC 3000 PSI	2	
9		57940487	HOSE-3/8X126-6FS JIC 3000 PSI	1	

https://truckmanualshub.com/

Hydraulic Component Location Diagram-Rod Loader (10' Rack) Fig 10-1

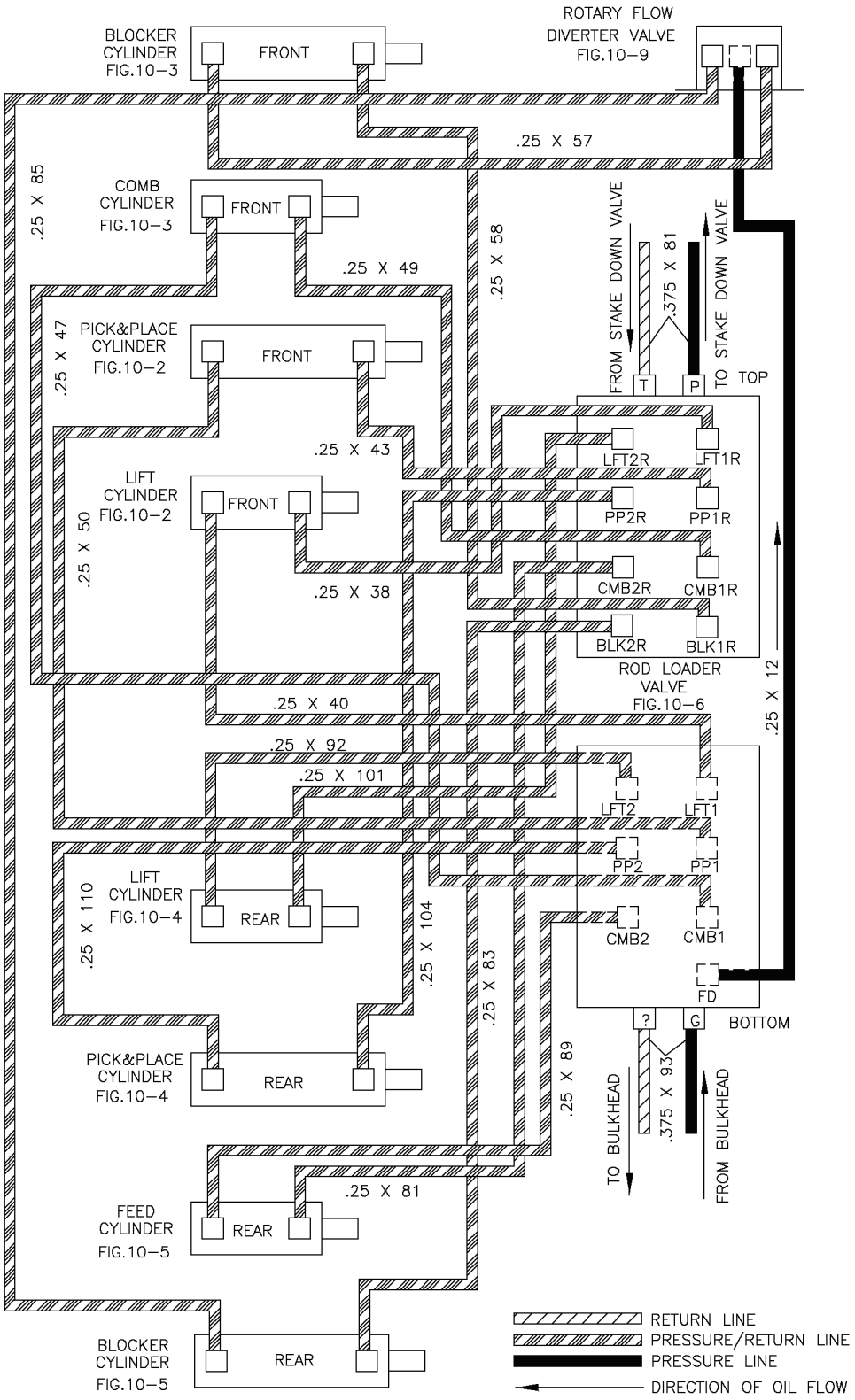

https://truckmanualshub.com/

Hydraulic Component Location Diagram-Rod Loader (10' Rack) Fig 10-1

REF. NO.	*	PART NO.	DESCRIPTION	QTY.	REMARKS

https://truckmanualshub.com/

Lift, Pick-Place Assembly - Front (10' Rack) Fig 10-2r01

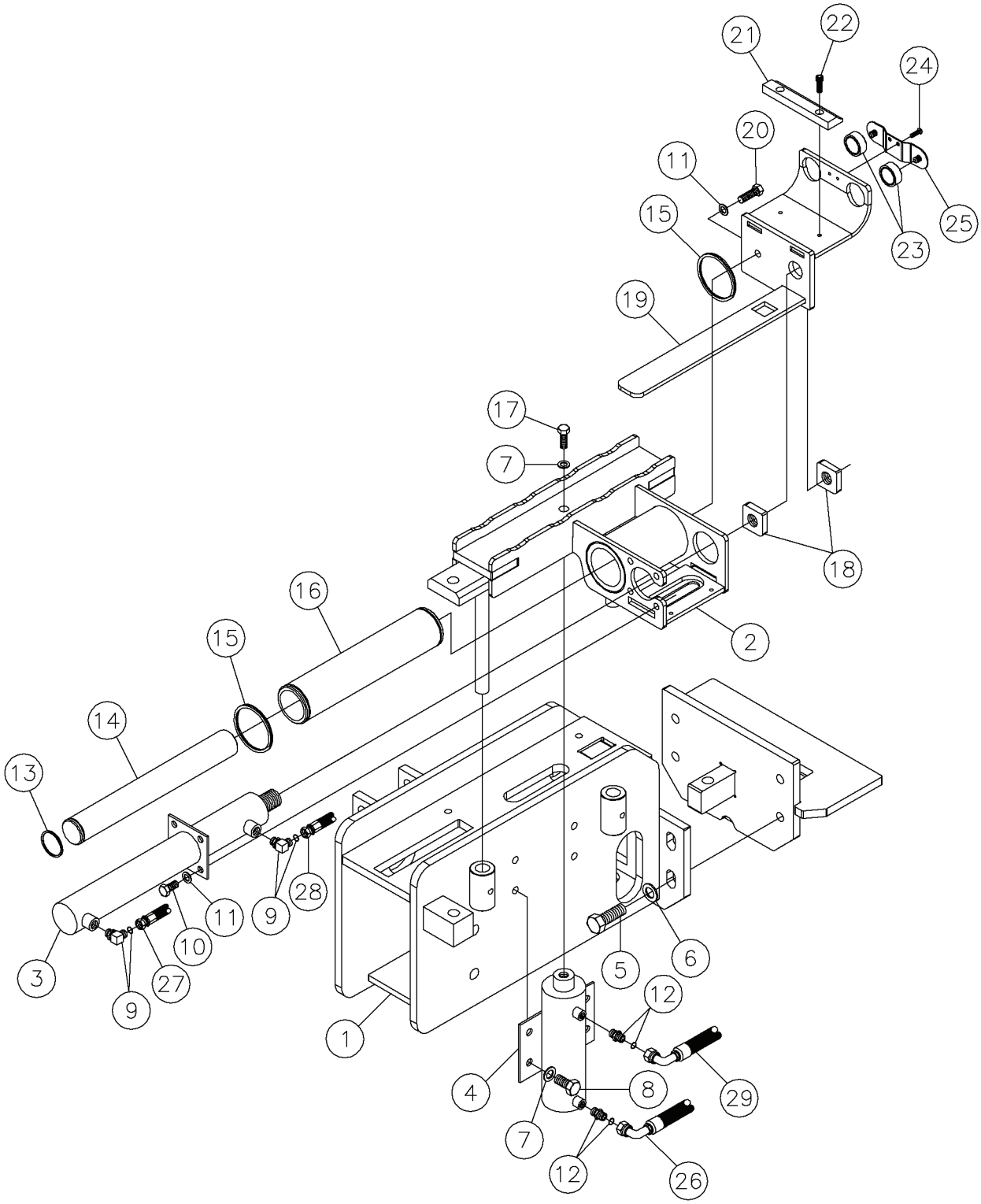

https://truckmanualshub.com/

Lift, Pick-Place Assembly - Front (10' Rack) Fig 10-2r01

REF. NO.	*	PART NO.	DESCRIPTION	QTY.	REMARKS
		Revision Date	June, 2004		Update In Illustration & Parts List.
1		296275033	WELDMENT - FRONT ROD LOADER FRAME	1	
2		296275027	WELDMENT- FRONT FOD LOADER LIFT	1	
3		291688001	CYLINDER - 1 1/2" BORE X 11 1/2" STROKE-HYD.	1	(BREAKDOWN FIG 14-45)
4		291638001	CYLINDER - 2"BORE X 3 3/8" STROKE HYDRAULIC	1	(BREAKDOWN FIG 14-44)
5		230728001	BOLT-5/8-11X1 3/4GR 8 PLATED	4	
6		235715001	WASHER-5/8 SAE HARD ZINC PLTD	4	
7		485025	WASHER-1/2 FLAT-HARDENED-YZ	5	
8		235729001	SCREW-HCS-.50-13X1.00-GR8-YZ	4	
9		72451001	FITTING-90-4MORFF-4MORBA	2	
10		3931006	3/8-24X3/4 GR 8 HEX HEAD	4	
11		235713001	WASHER - FLATSTRL - .38 - .41 X .81 - .06-YA-A325	5	
12		60908001	FITTING-4MX4M JIC STR ADAPTER	2	
13		291630001	RING - 1-1/2" EXTERNAL SPIRAL RETAINING	1	
14		291683001	SHAFT - INTER PICK & PLACE	1	
15		291631001	RING - 2-1/4" EXTERNAL SPIRAL RETAINING	2	
16		291682001	SLEEVE - INTERMEDIATE SLIP	1	
17		235721001	BOLT-1/2-13X1 1/2 GR8 ZINC PLT	1	
18		291681001	NUT - JAM	2	
19		296275044	WELDMENT - FRONT ROD CATCH	1	
20		235727001	BOLT-3/8-16X1 GR8 HEX ZINC PLT	1	
21		291607001	BLOCK - ROD WEDGE	1	
22		3147089	SCREW-1/4-20X1/2 SOCKET HEAD	2	
23		282642001	MAGNET - 1.25" ROD HOLDER	2	
24		240310001	SCREW - HCS - .38 - 16 X .50 - GR8 - YZ	2	
25		296275040	HOLDER - ROD MAGNET CLIP WELDMENT	1	
26		294608001	HOSE - HYD - .25 X 40 - 4FSORFF - ST/90 - 3000PSI	1	
27		294086001	HOSE - HYD.-0.25-50-4FOX-4FOX-100R17	1	
28		288722001	HOSE - HYD- .25-43-4FOX-4FOX-M3K	1	
29		294609001	HOSE - HYD -.25 X 38 - 4FSORFF - ST/90 - 3000PSI	1	

https://truckmanualshub.com/

Lift, Pick-Place Assembly - Front (10' Rack) Fig 10-2

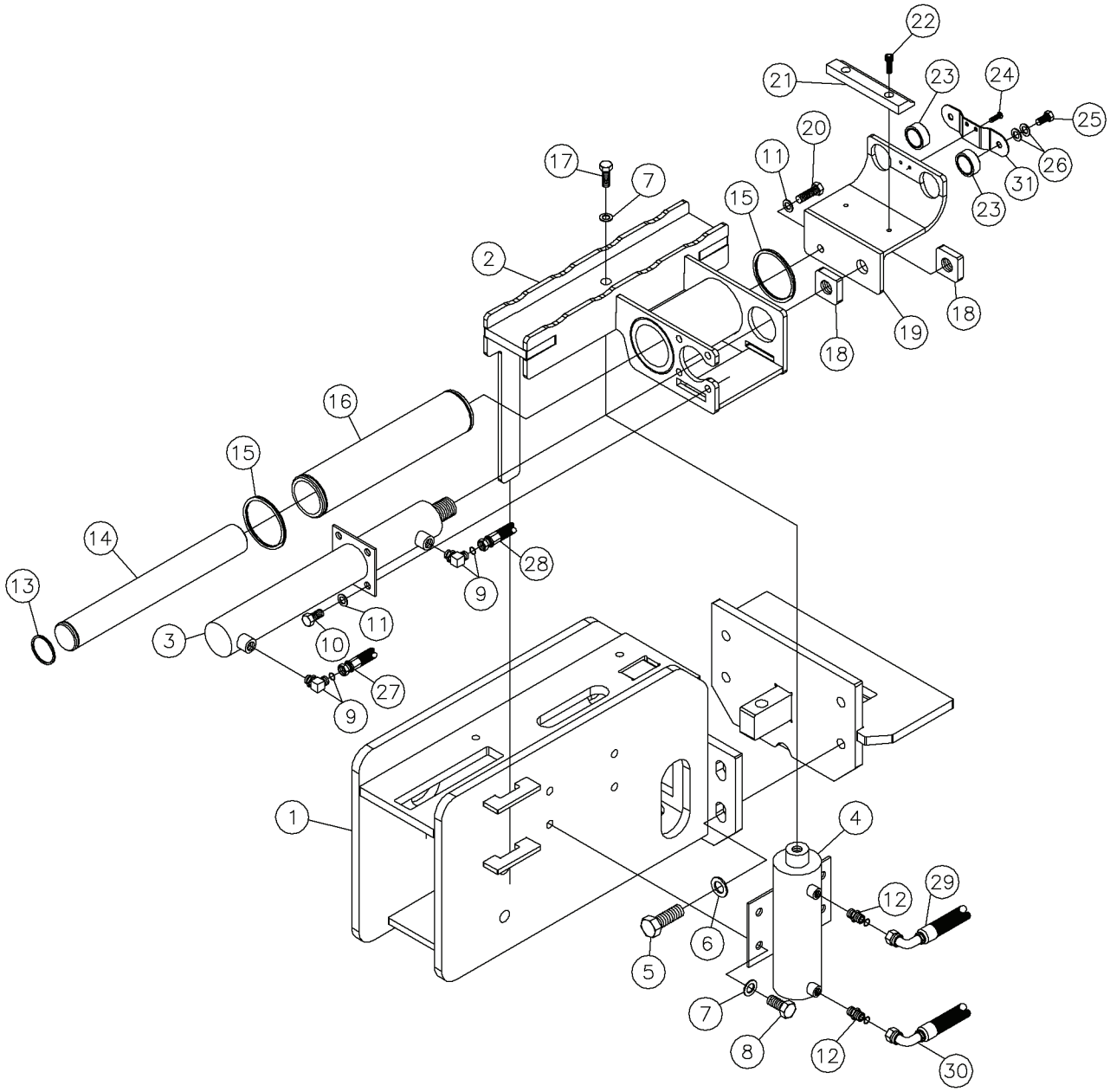

https://truckmanualshub.com/

Lift, Pick-Place Assembly - Front (10' Rack) Fig 10-2

REF. NO.	*	PART NO.	DESCRIPTION	QTY.	REMARKS
1		291652001	WELDMENT - FRONT ROD LOADER FRAME	1	
2		291649001	WELDMENT - FRONT ROD LOADER LIFT	1	
3		291688001	CYLINDER - 1 1/2" BORE X 11 1/2" STROKE-HYD.	1	(BREAKDOWN FIG. 14-45)
4		291638001	CYLINDER - 2"BORE X 3 3/8" STROKE HYDRAULIC	1	(BREAKDOWN FIG. 14-44)
5		230728001	BOLT-5/8-11X1 3/4GR 8 PLATED	4	
6		235715001	WASHER-5/8 SAE HARD ZINC PLTD	4	
7		485025	WASHER-1/2 FLAT-HARDENED-ZINC	5	
8		235729001	SCREW-HCS-.50-13X1.00-GR8-YZ	4	
9		72451001	FITTING-90-4MORFF-4MORBA	2	
10		3931006	BOLT - 3/8-24X3/4 GR 8 HEX HEAD	4	
11		235713001	WASHER-3/8 SAE HARD ZINC PLTD	5	
12		60908001	FITTING-4MX4M JIC STR ADAPTER	2	
13		291630001	RING - 1-1/2" EXTERNAL SPIRAL RETAINING	1	
14		291683001	SHAFT - INTER PICK & PLACE	1	
15		291631001	RING - 2-1/4" EXTERNAL SPIRAL RETAINING	2	
16		291682001	SLEEVE - INTERMEDIATE SLIP	1	
17		235721001	BOLT-1/2-13X1 1/2 GR8 ZINC PLT	1	
18		291681001	NUT - JAM	2	
19		291662001	WELDMENT - FRONT ROD CATCH	1	
20		235727001	BOLT-3/8-16X1 GR8 HEX ZINC PLT	1	
21		291607001	BLOCK - ROD WEDGE	1	
22		3147089	SCREW-1/4-20X1/2 SOCKET HEAD	2	
23		282642001	MAGNET - 1.25" ROD HOLDER	2	
24		904993001	BOLT-10-24 X 3/8 STOVE	2	
25		235740001	BOLT-5/16-18X1/2 GR8 ZINC PLT	2	
26		485005	WASHER-5/16 FLAT	4	
27		294086001	HOSE - HYD.-0.25-50-4FOX-4FOX-100R17	1	
28		288722001	HOSE - HYD- .25-43-4FOX-4FOX-M3K	1	
29		294609001	HOSE - HYD -.25 X 38 - 4FSORFF - ST/90 - 3000PSI	1	
30		294608001	HOSE - HYD - .25 X 40 - 4FSORFF - ST/90 - 3000PSI	1	
31		281734001	HOLDER - ROD MAGNET	1	

https://truckmanualshub.com/

Feed/Blocker Cylinder Assembly - Front (10' Rack) Fig 10-3r01

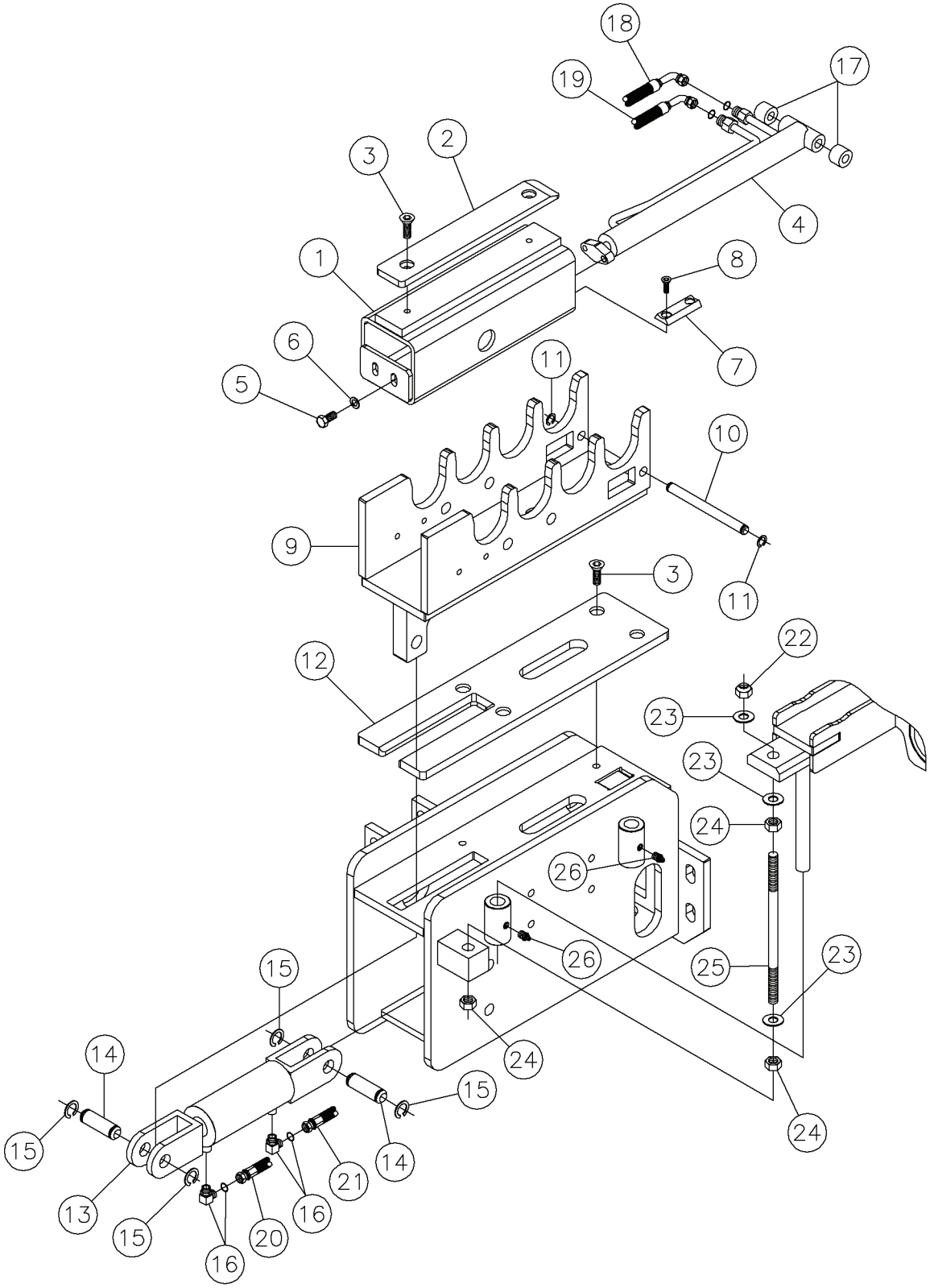

https://truckmanualshub.com/

Feed/Blocker Cylinder Assembly - Front (10' Rack) Fig 10-3r01

REF. NO.	*	PART NO.	DESCRIPTION	QTY.	REMARKS
		Revision Date	June, 2004		Update In Illustration & Parts List.
1		291585001	WELDMENT - ROD BLOCKER	1	
2		285679001	PLASTIC - TOP BLOCKER	1	
3		95988010	CAPSCREW-3/8-16X1 FLTHD SOCKET	6	
4		291558001	CYLINDER - 1” BORE X 9-3/4” STROKE HYDRAULIC	1	(BREAKDOWN FIG 14-42)
5		235726001	BOLT-3/8-16X3/4 GR8 HEX ZNCPLT	2	
6		235713001	WASHER - FLATSTRL - .38 - .41 X .81 - .06-YA-A325	2	
7		291636001	GUIDE - CYLINDER BARREL	1	
8		294847001	SCREW - SFHCS - .25 - 20 X .50 - GR8 - NP	2	
9		296275043	WELDMENT - REAR ROD LOADER COM.	1	
10		291616001	PIN - 1/2” X 5.75	1	
11		294761001	SNAP RING - .50 SHR-50	2	
12		291562001	PLATE - PLASTIC WEAR PAD	1	
13		291571001	CYLINDER - 2” BORE X 3 1/4” STROKE HYDRAULIC	1	(BREAKDOWN FIG 14-43)
14		294754001	PIN - 3/4” X 2.5	2	
15		294762001	SNAP RING - .75 SHF - 75	4	
16		72451001	FITTING-90-4MORFF-4MORBA	2	
17		291634001	SPACER - CYLINDER PIN	2	
18		294620001	HOSE -HYD - .25 X 47 - 4FSORFF - ST/90 - 3000PSI	1	
19		285818001	HOSE - HYD - .25-58 4FOX-4FOX90S-100R16	1	
20		294612001	HOSE - HYD - .25 X 49 - 4FSORFF - ST/ ST - 3000PSI	1	
21		294611001	HOSE - HYD - .25 X 47 - 4FSORFF - ST/ ST - 3000PSI	1	
22		250512001	NUT- 1/2 NC Gr8 TOP LOCK Y/ ZINC	1	
23		485025	WASHER-1/2 FLAT-HARDENED-YZ	3	
24		75383001	NUT-1/2-UNC GR.8 JAM HEX	3	
25		296265792	BAR - LOADER GUIDE	1	
26		586001	ZERK-1/8” ST NPT GREASE REF TR00484	2	

https://truckmanualshub.com/

Feed/Blocker Cylinder Assembly - Front (10' Rack) Fig 10-3

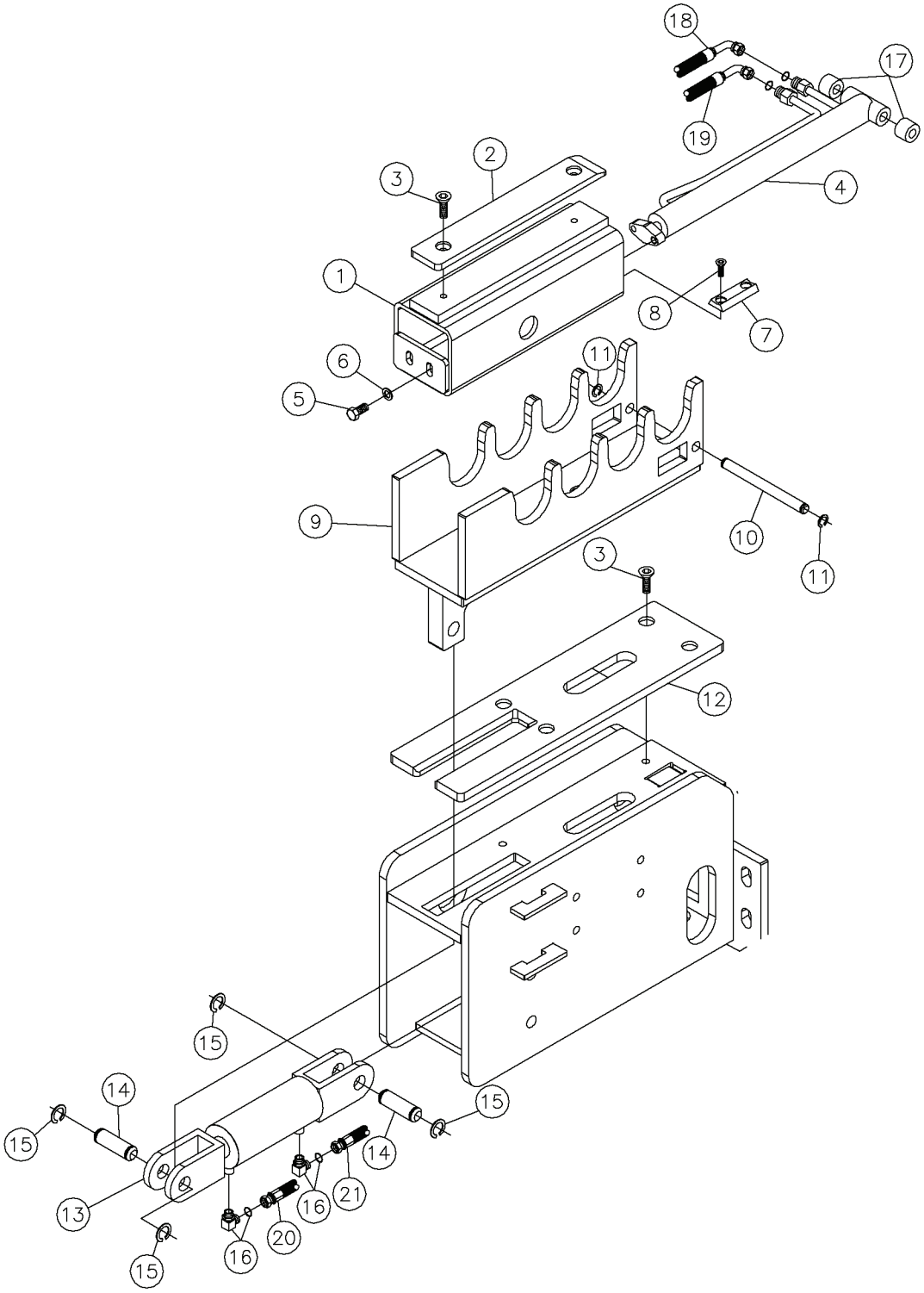

https://truckmanualshub.com/

Feed/Blocker Cylinder Assembly - Front (10' Rack) Fig 10-3

REF. NO.	*	PART NO.	DESCRIPTION	QTY.	REMARKS
1		291585001	WELDMENT - ROD BLOCKER	1	
2		285679001	PLASTIC - TOP BLOCKER	1	
3		95988001	CAPSCREW-3/8”-16 X 1” FLT HD SKT	6	
4		291558001	CYLINDER - 1” BORE X 9-3/4” STROKE HYDRAULIC	1	(BREAKDOWN FIG. 14-42)
5		235726001	BOLT-3/8-16X3/4 GR8 HEX ZNCPLT	2	
6		235713001	WASHER-3/8 SAE HARD ZINC PLTD	2	
7		291636001	GUIDE - CYLINDER BARREL	1	
8		294847001	SCREW - SFHCS - .25 - 20 X .50 - GR8 - NP	2	
9		291602001	WELDMENT - FRONT ROD LOADER COMB	1	
10		291616001	PIN - 1/2” X 5.75	1	
11		294761001	SNAP RING - .50 SHR-50	2	
12		291562001	PLATE - PLASTIC WEAR PAD	1	
13		291571001	CYLINDER - 2” BORE X 3 1/4” STROKE HYDRAULIC	1	(BREAKDOWN FIG. 14-43)
14		294754001	PIN - 3/4” X 2.5	2	
15		294762001	SNAP RING - .75 SHF - 75	4	
16		72451001	FITTING-90-4MORFF-4MORBA	2	
17		291634001	SPACER - CYLINDER PIN	2	
18		294620001	HOSE -HYD - .25 X 47 - 4FSORFF - ST/90 - 3000PSI	1	
19		285818001	HOSE - HYD - .25-58 4FOX-4FOX90S-100R16	1	
20		294612001	HOSE - HYD - .25 X 49 - 4FSORFF - ST/ ST - 3000PSI	1	
21		294611001	HOSE - HYD - .25 X 47 - 4FSORFF - ST/ ST - 3000PSI	1	

https://truckmanualshub.com/

Lift, Pick-Place Assembly - Rear (10' Rack) Fig 10-4r01

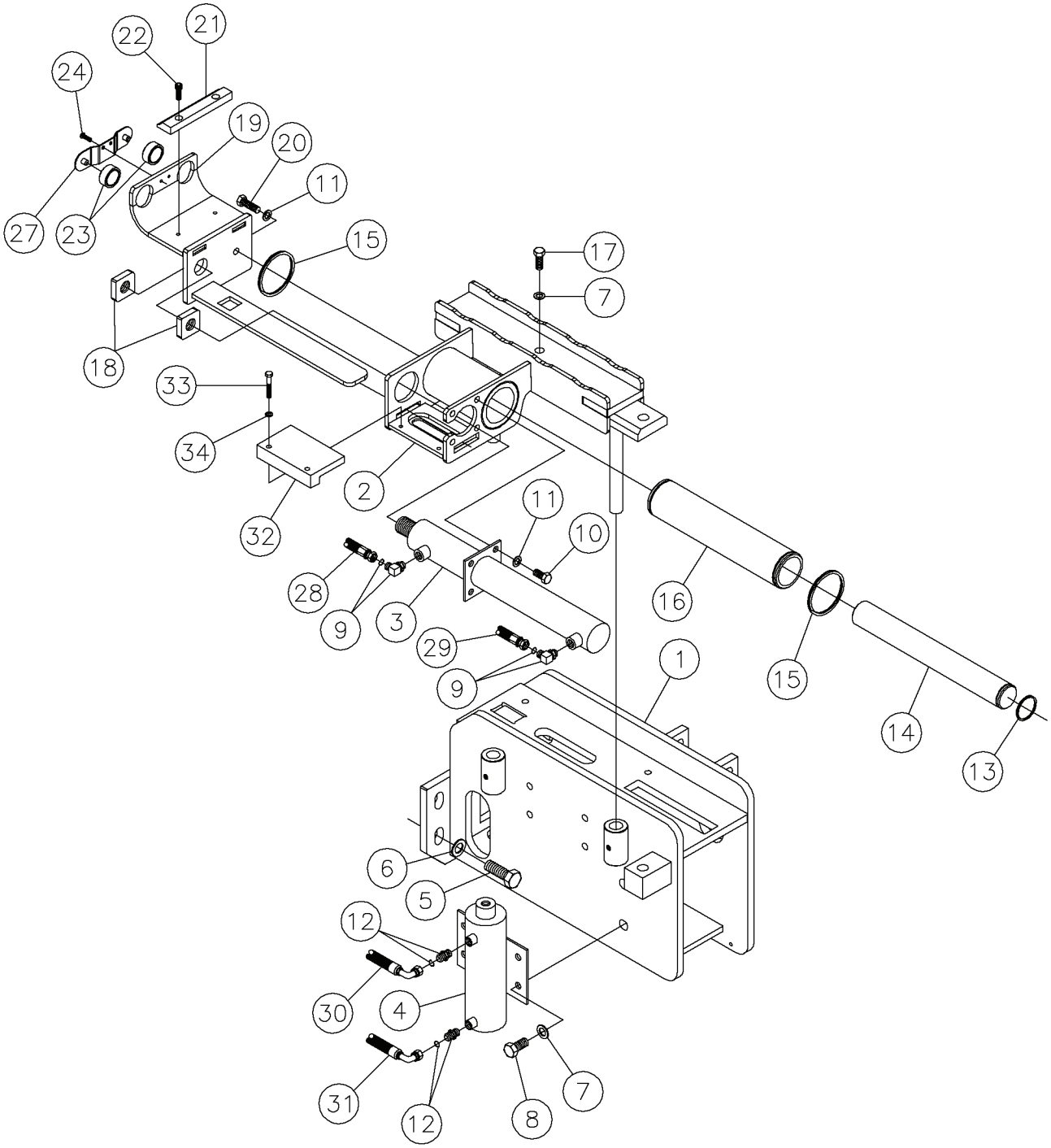

https://truckmanualshub.com/

Lift, Pick-Place Assembly - Rear (10' Rack) Fig 10-4r01

REF. NO.	*	PART NO.	DESCRIPTION	QTY.	REMARKS
		Revision Date	June, 2004		Update In Illustration & Parts List.
1		296275032	WELDMENT - REAR ROD LOADER FRAME	1	
2		296275031	WELDMENT - REAR ROD LOADER LIFT	1	
3		291688001	CYLINDER - 1 1/2" BORE X 11 1/2" STROKE-HYD.	1	(BREAKDOWN FIG 14-45)
4		291638001	CYLINDER - 2"BORE X 3 3/8" STROKE HYDRAULIC	1	(BREAKDOWN FIG 14-44)
5		230728001	BOLT-5/8-11X1 3/4GR 8 PLATED	4	
6		235714001	WASHER - FLATSTRL - .31 - .34 X .69 - .06-YZ-A325	4	
7		485025	WASHER-1/2 FLAT-HARDENED-YZ	5	
8		235729001	SCREW-HCS-.50-13X1.00-GR8-YZ	4	
9		72451001	FITTING-90-4MORFF-4MORBA	4	
10		3931006	3/8-24X3/4 GR 8 HEX HEAD	2	
11		235713001	WASHER - FLATSTRL - .38 - .41 X .81 - .06-YA-A325	5	
12		60908001	FITTING-4MX4M JIC STR ADAPTER	5	
13		291630001	RING - 1-1/2" EXTERNAL SPIRAL RETAINING	2	
14		291628001	SHAFT - INTER ROD LOADER	1	
15		291631001	RING - 2-1/4" EXTERNAL SPIRAL RETAINING	1	
16		291627001	SHAFT - INTERMEDIATE SLIP	2	
17		235721001	BOLT-1/2-13X1 1/2 GR8 ZINC PLT	1	
18		291681001	NUT - JAM	2	
19		296275039	WELDMENT - REAR ROD CATCH	1	
20		235727001	BOLT-3/8-16X1 GR8 HEX ZINC PLT	1	
21		291607001	BLOCK - ROD WEDGE	1	
22		60908001	FITTING-4MX4M JIC STR ADAPTER	2	
23		282642001	MAGNET - 1.25" ROD HOLDER	2	
24		904993001	BOLT-10-24 X 3/8 STOVE	2	
25		235740001	BOLT-5/16-18X1/2 GR8 ZINC PLT	2	
26		485005	WASHER-5/16 FLAT REF T04106	4	
27		296275040	HOLDER - ROD MAGNET CLIP WELDMENT	1	
28		294618001	HOSE - HYD -.25 X 104 - 4FSORFF - ST/ ST - 3000PSI	1	
29		97851041	HOSE-1/4X110 4FS ORFF 100R 24T	1	
30		294616001	HOSE - HYD - .25 X 101 - 4FSORFF - ST/ 90 - 3000PSI	1	
31		294615001	HOSE - HYD - .25 X 92 - 4FSORFF - ST/ ST - 3000PSI	1	
32		291690001	GUIDE - PROXY SLIDE	1	
33		238210001	BOLT - 1/4-20X1 1/2 GR8 HEX ZYC	2	
34		235716001	WASHER - FLATSTRL - .25 -.28 X .63 - .06 - CZ	2	

https://truckmanualshub.com/

Lift, Pick-Place Assembly - Rear (10' Rack) Fig 10-4

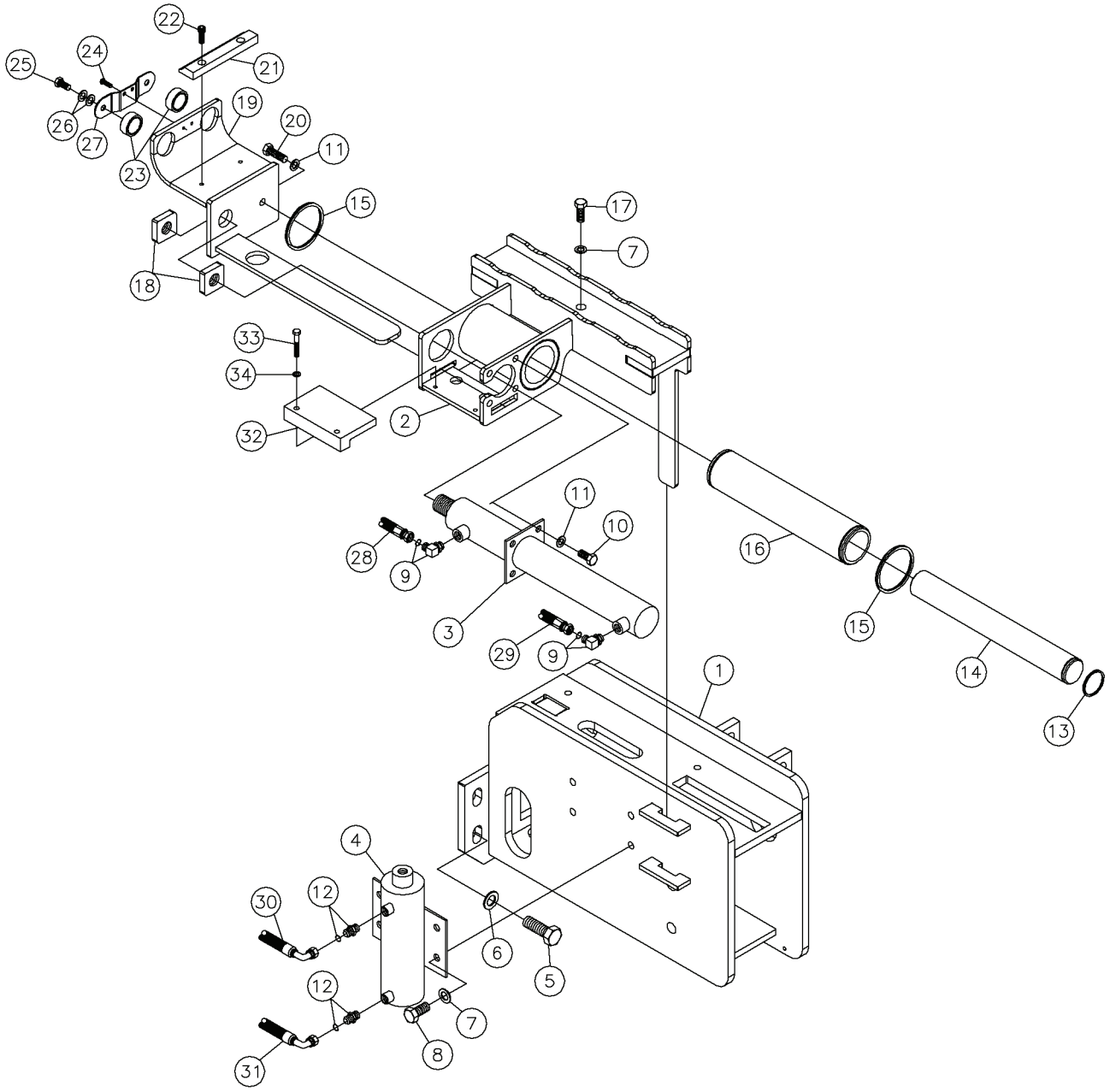

https://truckmanualshub.com/

Lift, Pick-Place Assembly - Rear (10' Rack) Fig 10-4

REF. NO.	*	PART NO.	DESCRIPTION	QTY.	REMARKS
1		291653001	WELDMENT - REAR ROD LOADER FRAME	1	
2		291648001	WELDMENT - REAR ROD LOADER LIFT	1	
3		291688001	CYLINDER - 1 1/2" BORE X 11 1/2" STROKE-HYD.	1	(BREKDOWN FIG. 14-45)
4		291638001	CYLINDER - 2"BORE X 3 3/8" STROKE HYDRAULIC	1	(BREKDOWN FIG. 14-44)
5		230728001	BOLT-5/8-11X1 3/4GR 8 PLATED	4	
6		235714001	WASHER-5/16 SAE HARD ZINC PLTD	4	
7		485025	WASHER-1/2 FLAT-HARDENED-ZINC	5	
8		235729001	SCREW-HCS-.50-13X1.00-GR8-YZ	4	
9		72451001	FITTING-90-4MORFF-4MORBA	2	
10		3931006	BOLT - 3/8-24X3/4 GR 8 HEX HEAD	4	
11		235713001	WASHER-3/8 SAE HARD ZINC PLTD	5	
12		60908001	FITTING-4MX4M JIC STR ADAPTER	2	
13		291630001	RING - 1-1/2" EXTERNAL SPIRAL RETAINING	1	
14		291628001	SHAFT - INTER ROD LOADER	1	
15		291631001	RING - 2-1/4" EXTERNAL SPIRAL RETAINING	2	
16		291627001	SHAFT - INTERMEDIATE SLIP	1	
17		235721001	BOLT-1/2-13X1 1/2 GR8 ZINC PLT	1	
18		291681001	NUT - JAM	2	
19		291660001	WELDMENT - REAR ROD CATCH	1	
20		235727001	BOLT-3/8-16X1 GR8 HEX ZINC PLT	1	
21		291607001	BLOCK - ROD WEDGE	1	
22		60908001	FITTING-4MX4M JIC STR ADAPTER	2	
23		282642001	MAGNET - 1.25" ROD HOLDER	2	
24		904993001	BOLT-10-24 X 3/8 STOVE	2	
25		235740001	BOLT-5/16-18X1/2 GR8 ZINC PLT	2	
26		485005	WASHER-5/16 FLAT	4	
27		281734001	HOLDER - ROD MAGNET	1	
28		294618001	HOSE - HYD -.25 X 104 - 4FSORFF - ST/ ST - 3000PSI	1	
29		97851041	HOSE-1/4X110 4FS ORFF 100R 24T	1	
30		294616001	HOSE - HYD - .25 X 101 - 4FSORFF - ST/ 90 - 3000PSI	1	
31		294615001	HOSE - HYD - .25 X 92 - 4FSORFF - ST/ ST - 3000PSI	1	
32		291690001	GUIDE - PROXY SLIDE	1	
33		238210001	BOLT - 1/4-20X1 1/2 GR8 HEX ZYC	2	
34		235716001	WASHER-1/4 SAE HARD ZINC PLTD	2	

https://truckmanualshub.com/

Feed/Blocker Cylinder Assembly - Rear (10' Rack) Fig 10-5r01

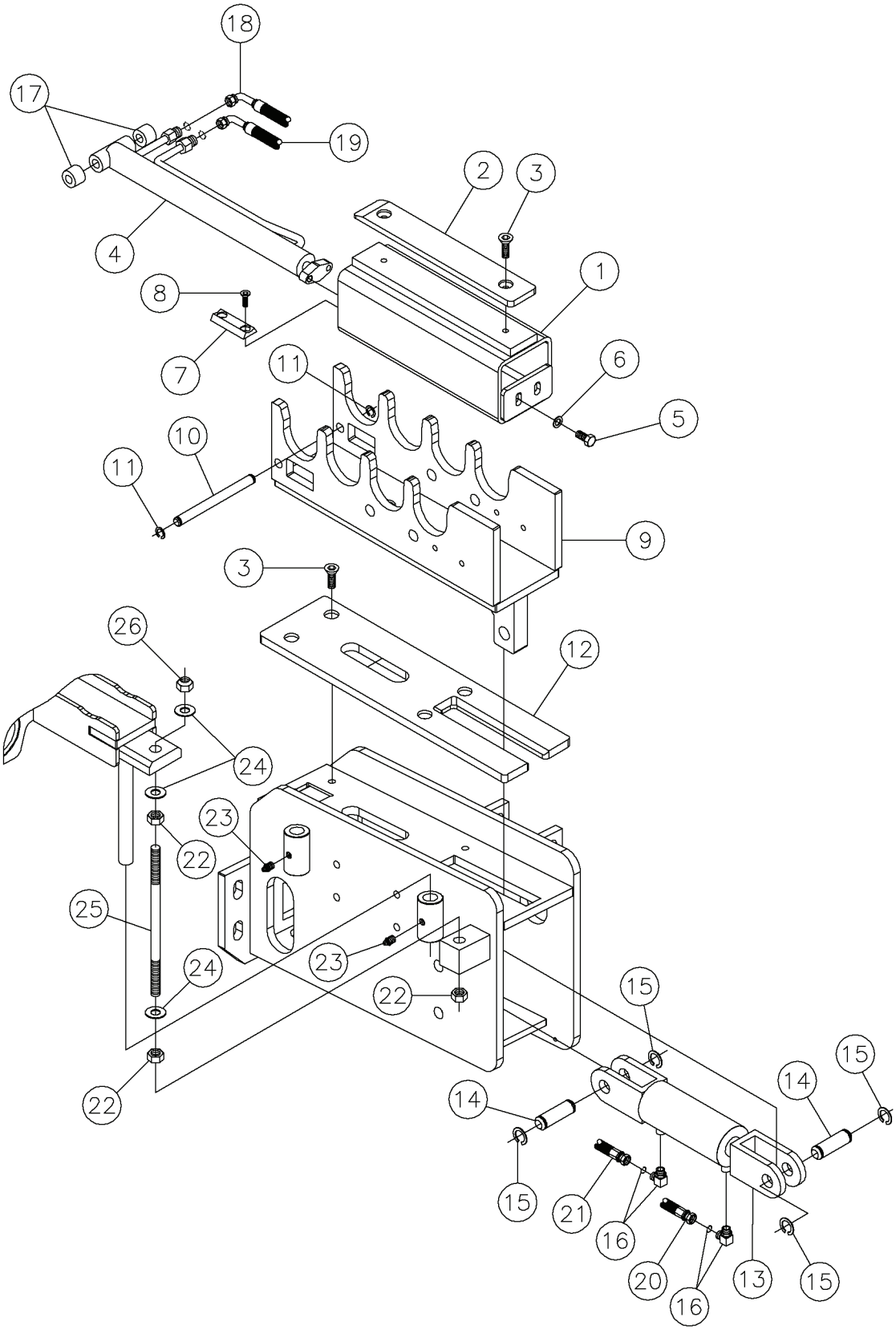

https://truckmanualshub.com/

Feed/Blocker Cylinder Assembly - Rear (10' Rack) Fig 10-5r01

REF. NO.	*	PART NO.	DESCRIPTION	QTY.	REMARKS
		Revision Date	June, 2004		Update In Illustration & Parts List.
1		291585001	WELDMENT - ROD BLOCKER	1	
2		285679001	PLASTIC - TOP BLOCKER	1	
3		95988010	CAPSCREW-3/8-16X1 FLTHD SOCKET	6	
4		291558001	CYLINDER - 1” BORE X 9-3/4” STROKE HYDRAULIC	1	(BREAKDOWN FIG 14-42)
5		235726001	BOLT-3/8-16X3/4 GR8 HEX ZNCPLT	2	
6		235713001	WASHER - FLATSTRL - .38 - .41 X .81 - .06-YA-A325	2	
7		291636001	GUIDE - CYLINDER BARREL	1	
8		294847001	SCREW - SFHCS - .25 - 20 X .50 - GR8 - NP	2	
9		296275043	WELDMENT - REAR ROD LOADER COM.	1	
10		291616001	PIN - 1/2” X 5.75	1	
11		294761001	SNAP RING - .50 SHR-50	2	
12		291562001	PLATE - PLASTIC WEAR PAD	1	
13		291571001	CYLINDER - 2” BORE X 3 1/4” STROKE HYDRAULIC	1	(BREAKDOWN FIG 14-43)
14		294754001	PIN - 3/4” X 2.5	2	
15		294762001	SNAP RING - .75 SHF - 75	4	
16		72451001	FITTING-90-4MORFF-4MORBA	2	
17		291634001	SPACER - CYLINDER PIN	2	
18		294610001	HOSE - HYD - .25 X 83 - 4FSORFF - ST/90 - 3000PSI	1	
19		285819001	HOSE - HYD - .25-66 4FOX-4FOX90S-100R16	1	
20		294614001	HOSE - HYD - .25 X 81 - 4FSORFF - ST/ ST - 3000PSI	1	
21		294613001	HOSE - HYD - .25 X89 - 4FSORFF - ST/ST - 3000PSI	1	
22		75383001	NUT-1/2-UNC GR.8 JAM HEX	3	
23		586001	ZERK-1/8” ST NPT GREASE	2	
24		485025	WASHER-1/2 FLAT-HARDENED-YZ	3	
25		296265792	BAR - LOADER GUIDE	1	
26		250512001	NUT- 1/2 NC Gr8 TOP LOCK Y/ ZINC	1	

https://truckmanualshub.com/

Feed/Blocker Cylinder Assembly - Rear (10' Rack) Fig 10-5

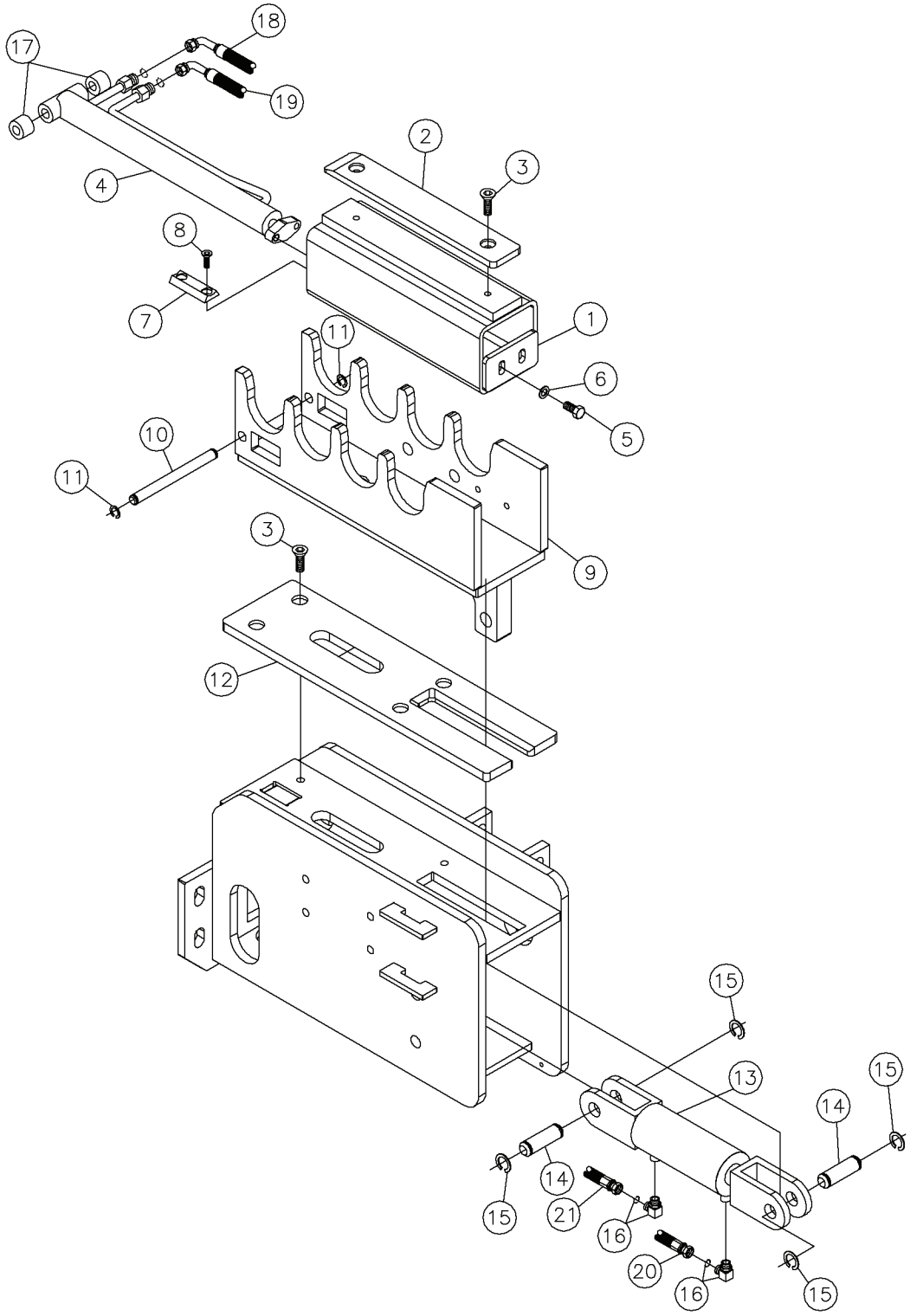

https://truckmanualshub.com/

Feed/Blocker Cylinder Assembly - Rear (10' Rack) Fig 10-5

REF. NO.	*	PART NO.	DESCRIPTION	QTY.	REMARKS
1		291585001	WELDMENT - ROD BLOCKER	1	
2		285679001	PLASTIC - TOP BLOCKER	1	
3		95988001	CAPSCREW-3/8”-16 X 1” FLT HD SKT	6	
4		291558001	CYLINDER - 1” BORE X 9-3/4” STROKE HYDRAULIC	1	(BREAKDOWN FIG. 14-42)
5		235726001	BOLT-3/8-16X3/4 GR8 HEX ZNCPLT	2	
6		235713001	WASHER-3/8 SAE HARD ZINC PLTD	2	
7		291636001	GUIDE - CYLINDER BARREL	1	
8		294847001	SCREW - SFHCS - .25 - 20 X .50 - GR8 - NP	2	
9		291601001	WELDMENT - REAR ROD LOADER COMB	1	
10		291616001	PIN - 1/2” X 5.75	1	
11		294761001	SNAP RING - .50 SHR-50	2	
12		291562001	PLATE - PLASTIC WEAR PAD	1	
13		291571001	CYLINDER - 2” BORE X 3 1/4” STROKE HYDRAULIC	1	(BREAKDOWN FIG. 14-43)
14		294754001	PIN - 3/4” X 2.5	2	
15		294762001	SNAP RING - .75 SHF - 75	4	
16		72451001	FITTING-90-4MORFF-4MORBA	2	
17		291634001	SPACER - CYLINDER PIN	2	
18		294610001	HOSE - HYD - .25 X 83 - 4FSORFF - ST/90 - 3000PSI	1	
19		294619001	HOSE - HYD - .25 X 85 - 4FSORFF - ST/90 - 3000PSI	1	
20		294614001	HOSE - HYD - .25 X 81 - 4FSORFF - ST/ ST - 3000PSI	1	
21		294613001	HOSE - HYD - .25 X89 - 4FSORFF - ST/ST - 3000PSI	1	

https://truckmanualshub.com/

Rod Loader Valve Assembly (10' Rack) Fig 10-6

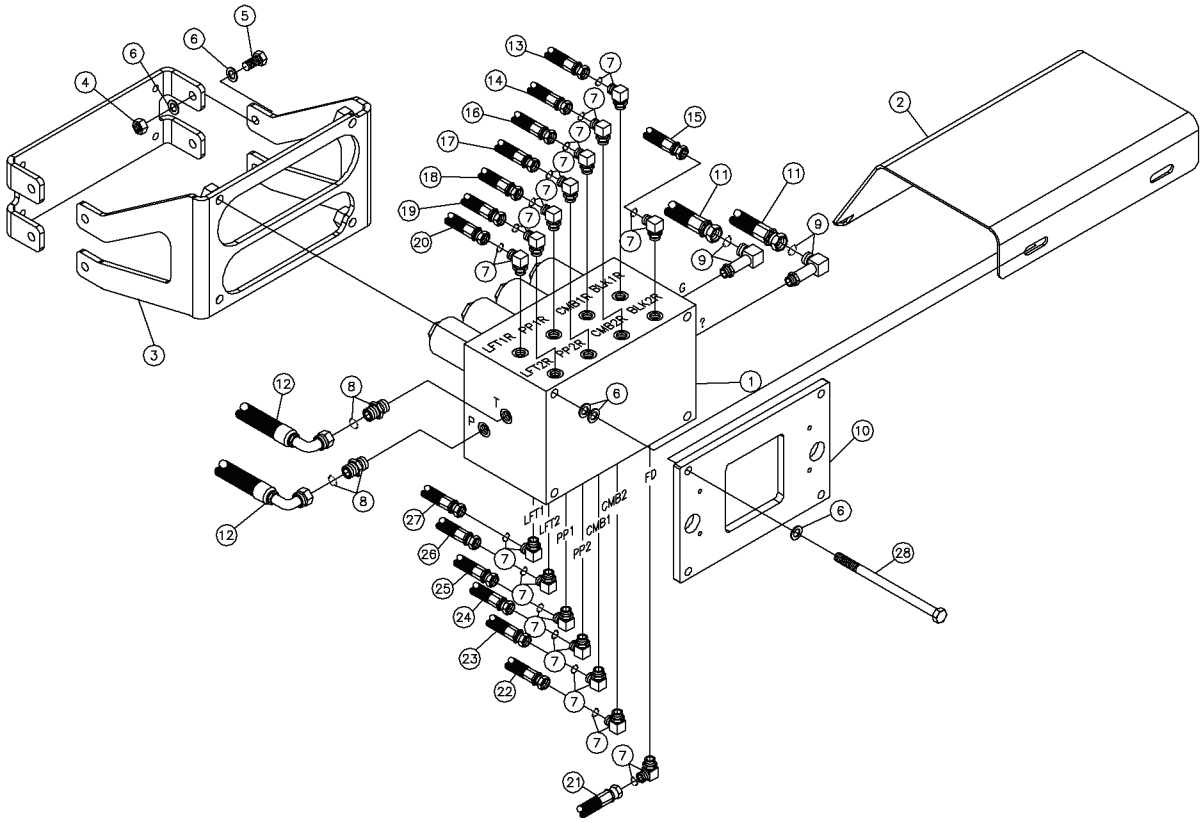

https://truckmanualshub.com/

Rod Loader Valve Assembly (10' Rack) Fig 10-6

REF. NO.	*	PART NO.	DESCRIPTION	QTY.	REMARKS
1		278293001	VALVE - ROD LOADER	1	BREAKDOWN FIG.14-27
2		294870001	SHIELD - ROD LOADER VALVE	1	
3		296252287	WELDMENT - ROD LOADER VALVE BRACKET	1	
4		235725001	NUT-3/8-16 GR8 ZINC PLTD	4	
5		235726001	BOLT-3/8-16X3/4 GR8 HEX ZNCPLT	4	
6		235713001	WASHER-3/8 SAE HARD ZINC PLTD	20	
7		72451001	FITTING-90-4MORFF-4MORBA	15	
8		72442001	FITTING-6F5OLO	2	
9		157172001	FITTING - 6M X 6M JIC LL 90 DEG	2	
10		291625001	PLATE - FLOW DIVIDER MOUNT	1	
11		294597001	HOSE -HYD - .38 X 93 - 6FSJ - ST/90 - 3000PSI	2	
12		294617001	HOSE - HYD - .38 X 81 - 6FSJ - ST/90 - 3000PSI	2	
13		285818001	HOSE - HYD - .25-58 4FOX-4FOX90S-100R16	1	
14		294614001	HOSE - HYD - .25 X 81 - 4FSORFF - ST/ ST - 3000PSI	1	
15		294610001	HOSE - HYD - .25 X 83 - 4FSORFF - ST/90 - 3000PSI	1	
16		294612001	HOSE - HYD - .25 X 49 - 4FSORFF - ST/ ST - 3000PSI	1	
17		294618001	HOSE - HYD -.25 X 104 - 4FSORFF - ST/ ST - 3000PSI	1	
18		288722001	HOSE - HYD- .25-43-4FOX-4FOX-M3K	1	
19		294616001	HOSE - HYD - .25 X 101 - 4FSORFF - ST/ 90 - 3000PSI	1	
20		294609001	HOSE - HYD -.25 X 38 - 4FSORFF - ST/90 - 3000PSI	1	
21		97851005	HOSE-1/4X12 4FSORS 3000 PSI	1	
22		294613001	HOSE - HYD - .25 X89 - 4FSORFF - ST/ST - 3000PSI	1	
23		294611001	HOSE - HYD - .25 X 47 - 4FSORFF - ST/ ST - 3000PSI	1	
24		97851041	HOSE-1/4X110 4FS ORFF 100R 24T	1	
25		294086001	HOSE - HYD.-0.25-50-4FOX-4FOX-100R17	1	
26		294615001	HOSE - HYD - .25 X 92 - 4FSORFF - ST/ ST - 3000PSI	1	
27		294608001	HOSE - HYD - .25 X 40 - 4FSORFF - ST/90 - 3000PSI	1	
28		238214001	BOLT 3/8-16 X 6” GR8 HEX Y\ZINC	4	

https://truckmanualshub.com/

Rod Box Assembly - Tall (10' Rack) Fig 10-7r01

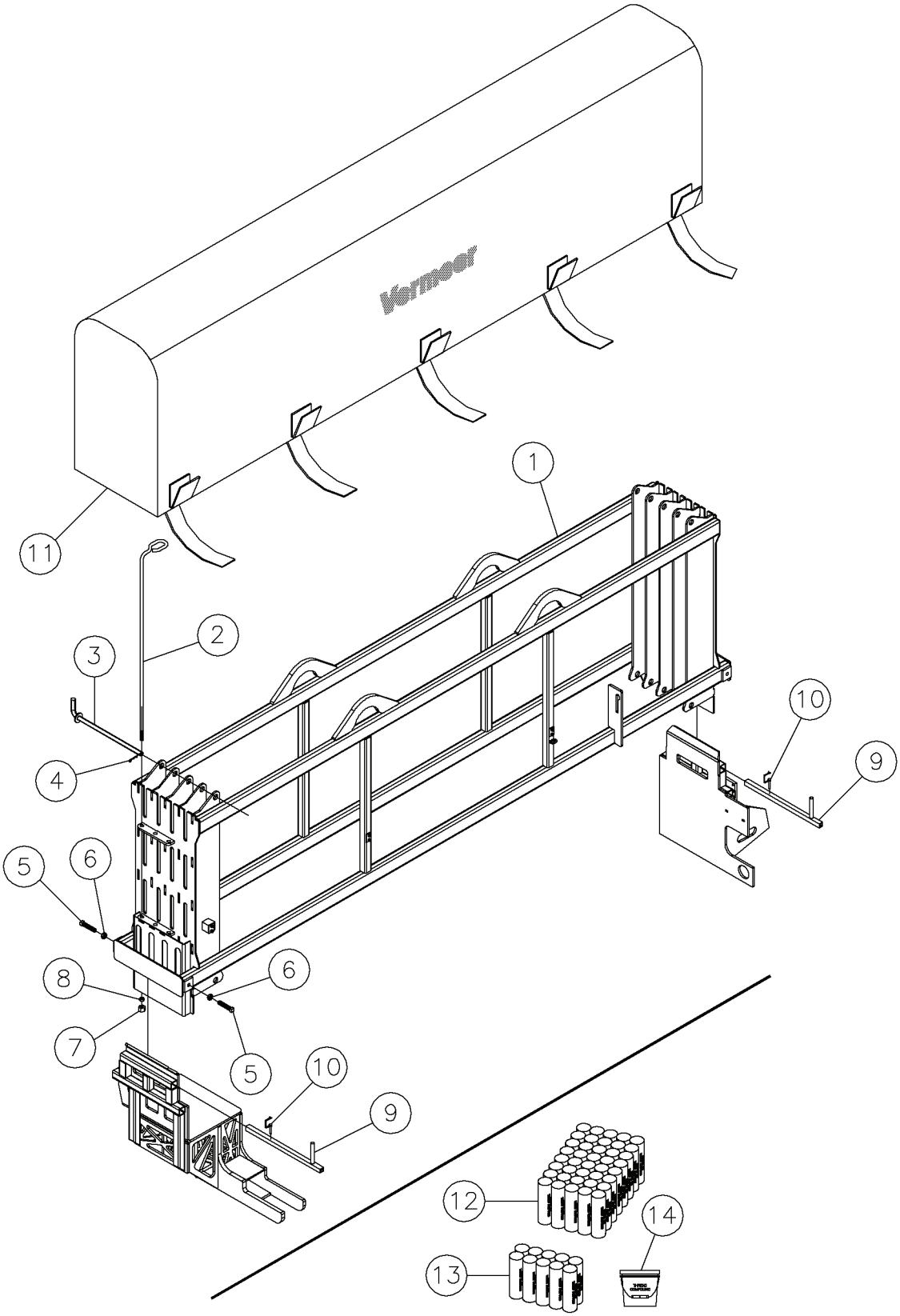

https://truckmanualshub.com/

Rod Box Assembly - Tall (10' Rack) Fig 10-7r01

REF. NO.	*	PART NO.	DESCRIPTION	QTY.	REMARKS
		Revision Date	June, 2004		Update In Parts List.
1		296256145	WELDMENT - ROD BOX - 10FT	1	
2		296256054	ROD - ROD BOX FULL - FORM - 38.5	3	
3		296256100	WELDMENT - ROD BOX PIN	4	
4		1794003	HAIR PIN COTTER - .148 WIRE	4	
5		601697030	SQ HSS-5/8-11X3 ZINC PLT	4	
6		250514001	NUT -5/8NC JAM Y/ZINC	4	
7		281692001	TARGET - COLUMN FULL SWITCH	3	
8		75383001	NUT-1/2-UNC GR.8 JAM HEX	3	
9		276404001	PIN - ROD BOX	2	
10		2108001	LYNCH PIN - 1/4 X 2	2	
11		294584001	COVER - 10’ ROD BOX	1	
12		275928982	THRD CMPND - CASE OF 4 / 10 PACKS	A/R	
13		275927982	THRD CMPND - PLUSCO 135 - 10 PACK	A/R	
14		235983001	LUBRICANT - THREAD 1 GALLON	A/R	

https://truckmanualshub.com/

Rod Box Assembly - Tall (10' Rack) Fig 10-7

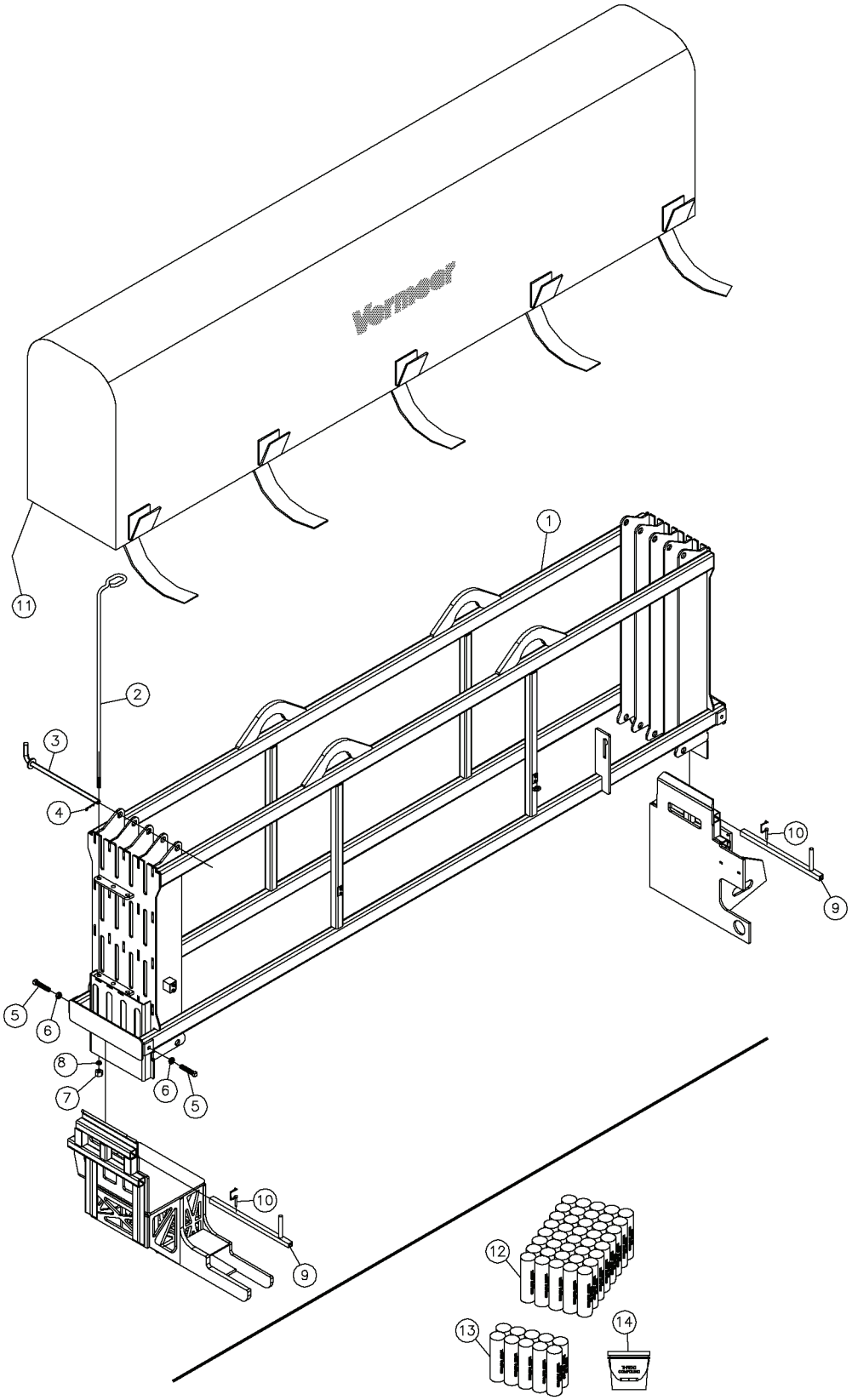

https://truckmanualshub.com/

Rod Box Assembly - Tall (10' Rack) Fig 10-7

REF. NO.	*	PART NO.	DESCRIPTION	QTY.	REMARKS
1		296256145	WELDMENT - ROD BOX - 10FT	1	
2		296256054	ROD - ROD BOX FULL - FORM - 35.5	3	
3		296256100	WELDMENT - ROD BOX PIN	4	
4		1794003	HAIR PIN COTTER - .148 WIRE	4	
5		551030	SQ HSS-5/8-11X3	4	
6		250514001	NUT -5/8NC JAM Y/ZINC	4	
7		281692001	TARGET - COLUMN FULL SWITCH	3	
8		75383001	NUT-1/2-UNC GR.8 JAM HEX	3	
9		276404001	PIN - ROD BOX	2	
10		2108001	LYNCH PIN - 1/4 X 2	2	
11		294584001	COVER - 10’ ROD BOX	1	
12		275928982	THRD CMPND - PLUSCO 135 - 4/10 PACK	A/R	
13		275927982	THRD CMPND - PLUSCO 135 - 10 PACK	A/R	
14		235983001	THRD CMPD-PLUSCO 135 HT CU 13#	A/R	

https://truckmanualshub.com/

Rod Box Assembly - Short (10' Rack) Fig 10-8r01

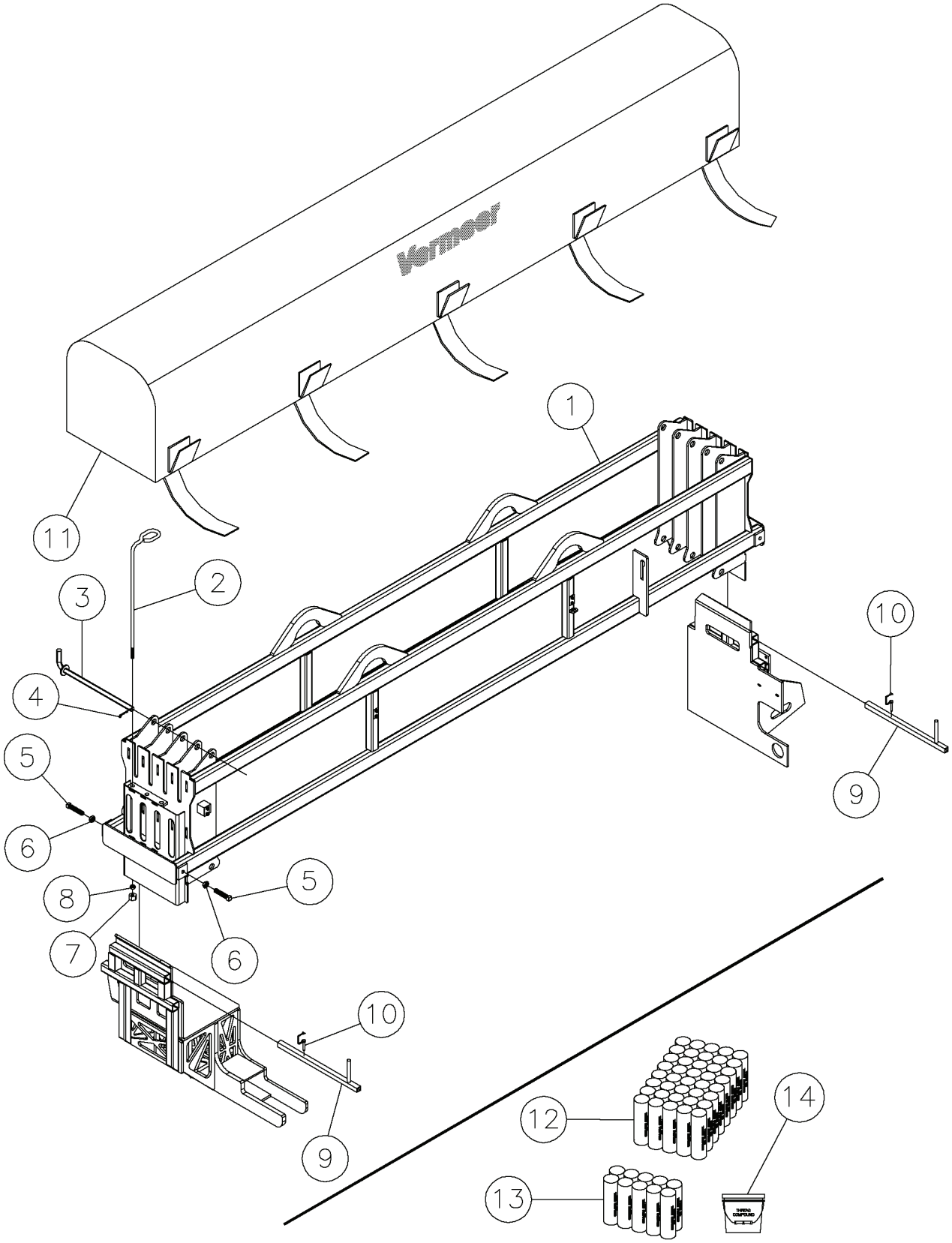

https://truckmanualshub.com/

Rod Box Assembly - Short (10' Rack) Fig 10-8r01

REF. NO.	*	PART NO.	DESCRIPTION	QTY.	REMARKS
		Revision Date	June, 2004		Update In Parts List.
1		296256104	WELDMENT - ROD BOX - 10FT	1	
2		296256112	ROD - ROD BOX FULL - FORM - 38.5	3	
3		296256100	WELDMENT - ROD BOX PIN	4	
4		1794003	HAIR PIN COTTER - .148 WIRE	4	
5		601697030	SQ HSS-5/8-11X3 ZINC PLT	4	
6		250514001	NUT -5/8NC JAM Y/ZINC	4	
7		281692001	TARGET - COLUMN FULL SWITCH	3	
8		75383001	NUT-1/2-UNC GR.8 JAM HEX	3	
9		276404001	PIN - ROD BOX	2	
10		2108001	LYNCH PIN - 1/4 X 2	2	
11		291708001	COVER - 10’ ROD BOX	1	
12		275928982	THRD CMPND - CASE OF 4 / 10 PACKS	1	
13		275927982	THRD CMPND - PLUSCO 135 - 10 PACK	1	
14		235983001	LUBRICANT - THREAD 1 GALLON	1	

https://truckmanualshub.com/

Rod Box Assembly - Short (10' Rack) Fig 10-8

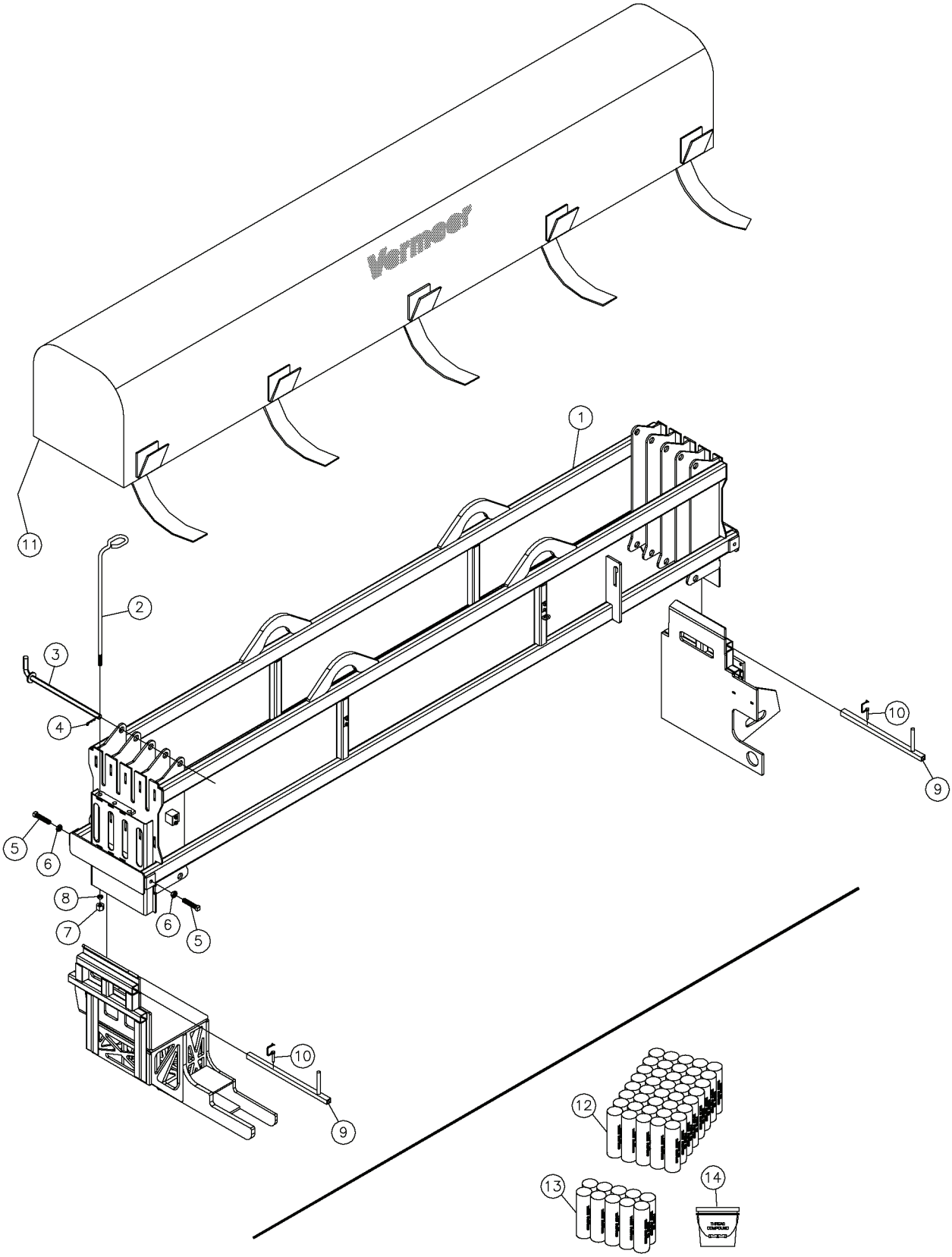

https://truckmanualshub.com/

Rod Box Assembly - Short (10' Rack) Fig 10-8

REF. NO.	*	PART NO.	DESCRIPTION	QTY.	REMARKS
1		296256104	WELDMENT - ROD BOX 10FT - 280FT	1	
2		296256112	ROD - ROD BOX FULL - FORM 21.75	3	
3		296256100	WELDMENT - ROD BOX PIN	4	
4		1794003	HAIR PIN COTTER - .148 WIRE	4	
5		551030	SQ HSS-5/8-11X3	4	
6		250514001	NUT -5/8NC JAM Y/ZINC	4	
7		281692001	TARGET - COLUMN FULL SWITCH	3	
8		75383001	NUT-1/2-UNC GR.8 JAM HEX	3	
9		276404001	PIN - ROD BOX	2	
10		2108001	LYNCH PIN - 1/4 X 2	2	
11		291708001	COVER-10’ (SHORT)ROD BOX	1	
12		275928982	THRD CMPND - PLUSCO 135 - 4/10 PACK	1	
13		275927982	THRD CMPND - PLUSCO 135 - 10 PACK	1	
14		235983001	THRD CMPD-PLUSCO 135 HT CU 13#	1	

https://truckmanualshub.com/

Hydraulic Assembly - Flow Divider (10' Rack) Fig 10-9

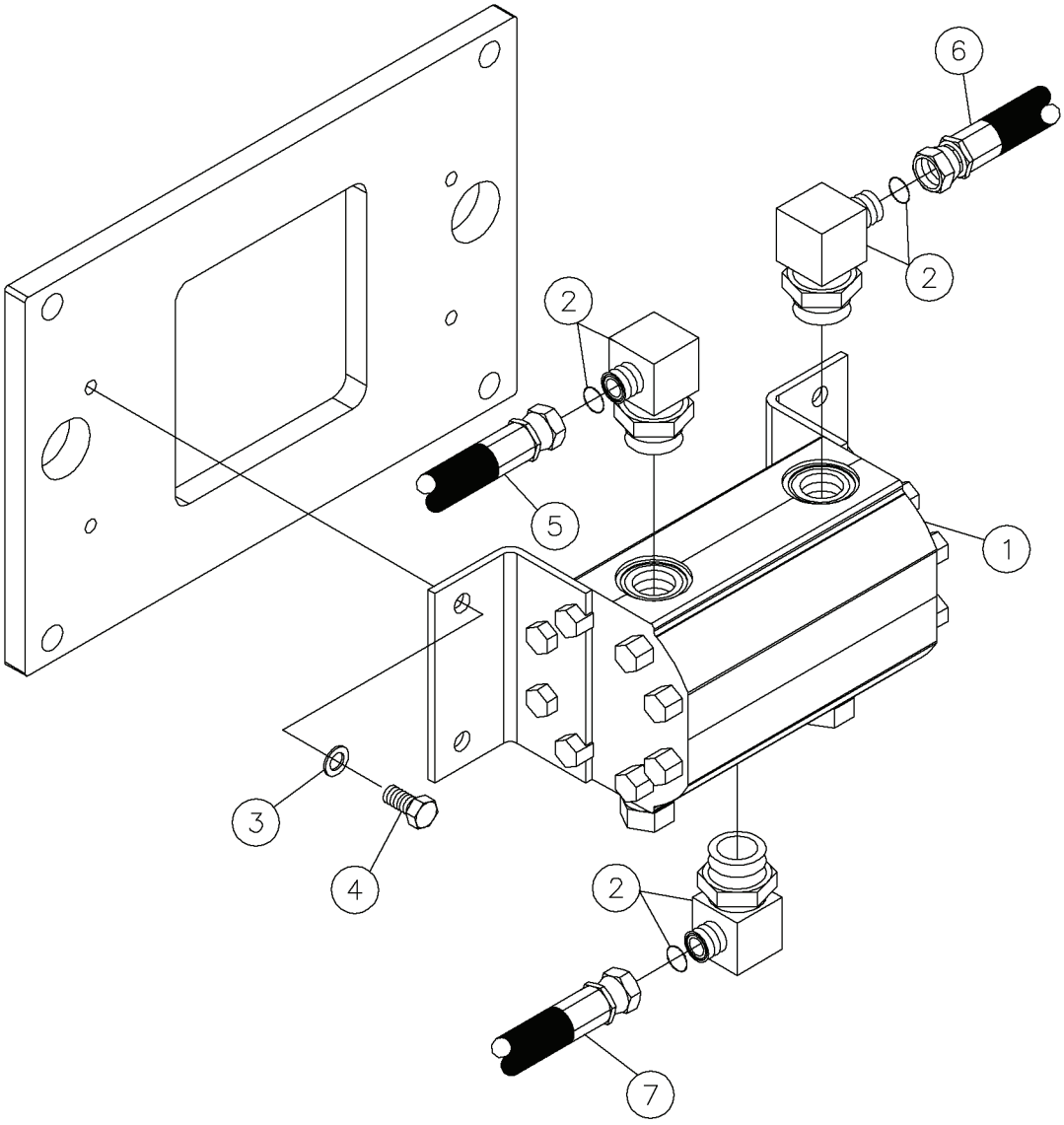

https://truckmanualshub.com/

Hydraulic Assembly - Flow Divider (10' Rack) Fig 10-9

REF. NO.	*	PART NO.	DESCRIPTION	QTY.	REMARKS
1		294789001	FLOW DIVIDER - ROTARY 1300634	1	
2		86671001	FITTING-8M ORING X4M JIC 90 EL	3	
3		235716001	WASHER-1/4 SAE HARD ZINC PLTD	4	
4		235733001	BOLT-1/4-20X1/2 GR8 ZINC PLTD	4	
5		294620001	HOSE -HYD - .25 X 47 - 4FSORFF - ST/90 - 3000PSI	1	
6		294619001	HOSE - HYD - .25 X 85 - 4FSORFF - ST/90 - 3000PSI	1	
7		97851005	HOSE-1/4X12 4FSORS 3000 PSI	1	

https://truckmanualshub.com/

Hydraulic Component Location Diagram-Stationary Stakedown (15' Rack) Fig 11-1

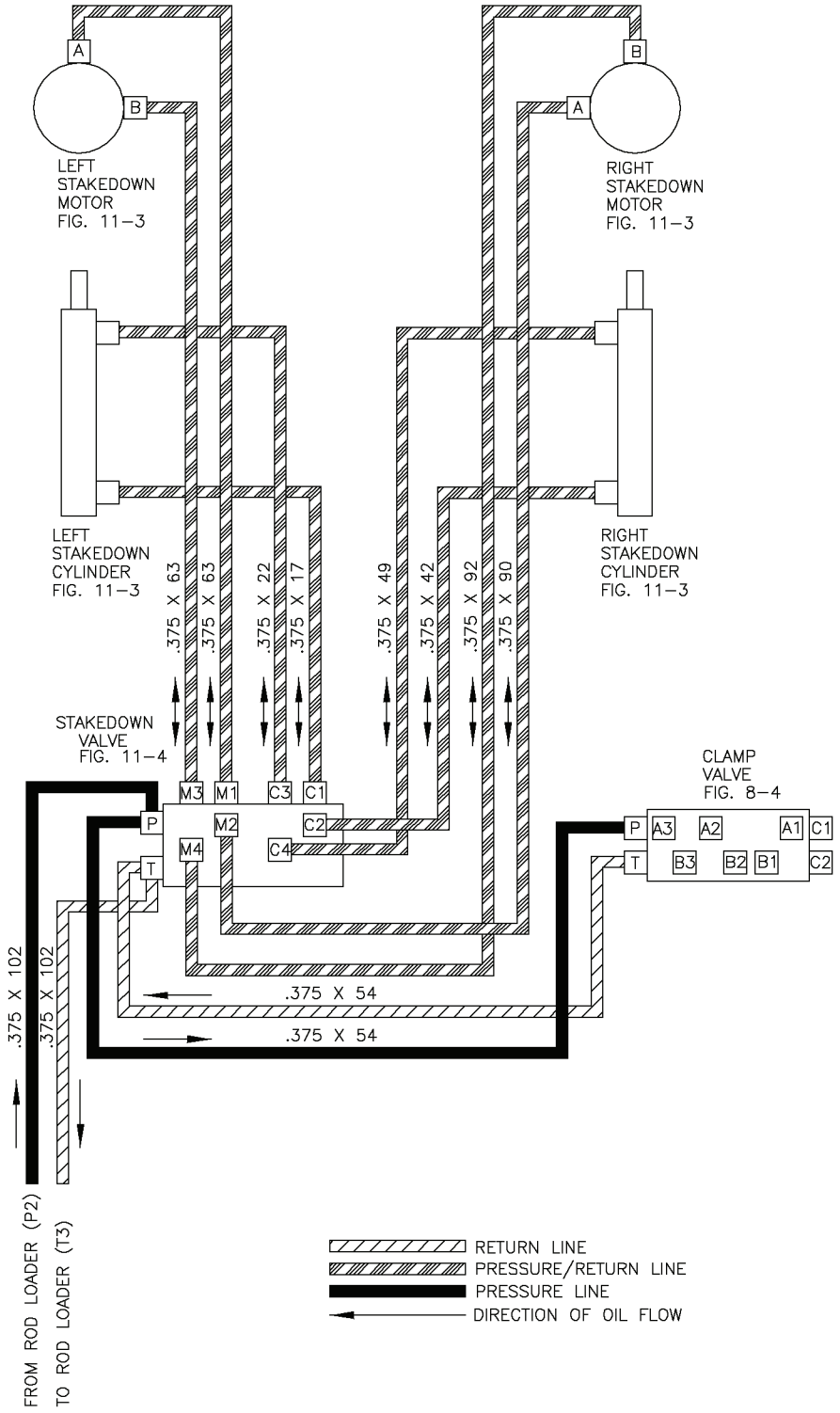

https://truckmanualshub.com/

Hydraulic Component Location Diagram-Stationary Stakedown (15' Rack) Fig 11-1

REF. NO.	*	PART NO.	DESCRIPTION	QTY.	REMARKS

https://truckmanualshub.com/

Hydraulic Component Location Diagram-Stationary Stakedown (10' Rack) Fig 11-2

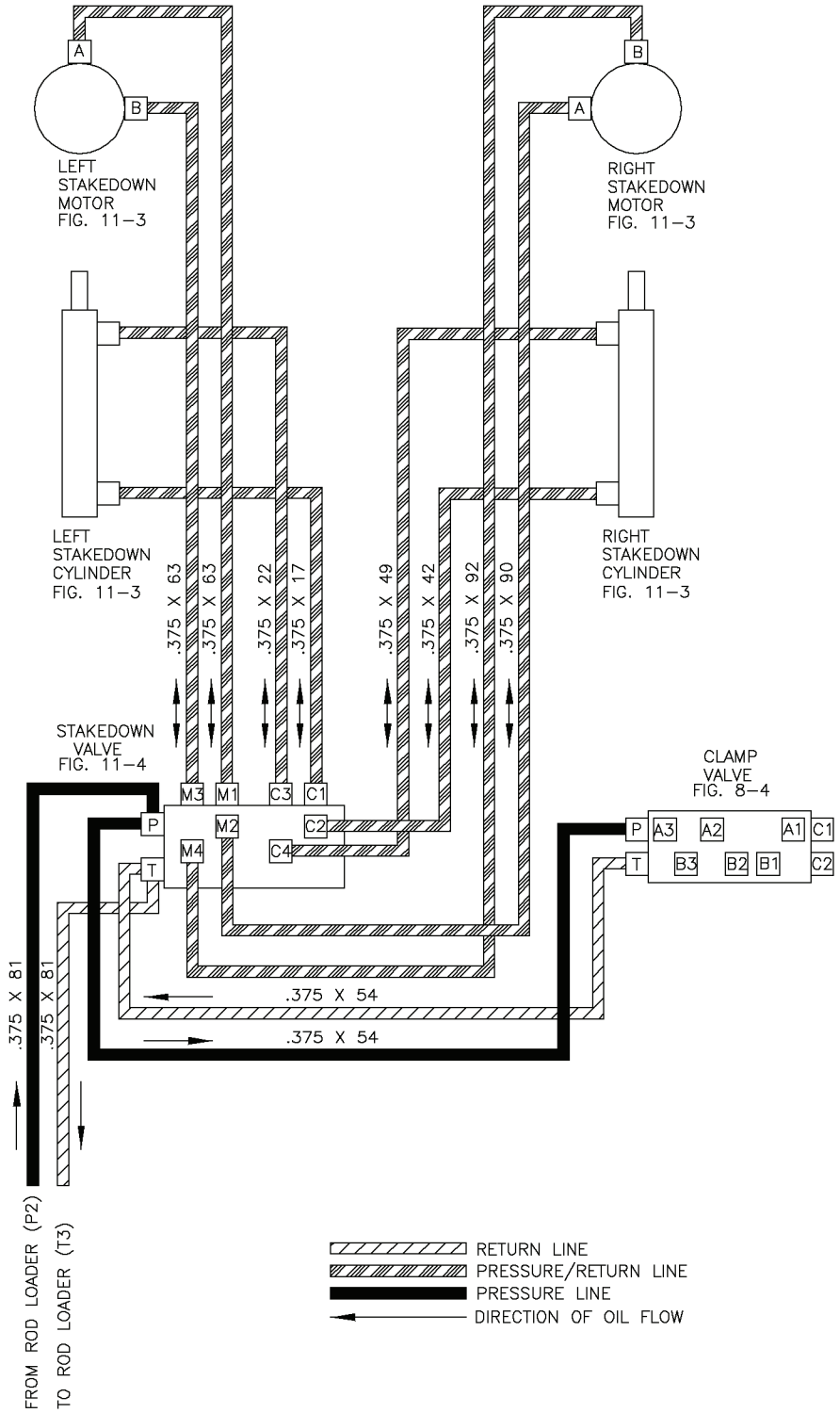

https://truckmanualshub.com/

Hydraulic Component Location Diagram-Stationary Stakedown (10' Rack) Fig 11-2

REF. NO.	*	PART NO.	DESCRIPTION	QTY.	REMARKS

https://truckmanualshub.com/

Stationary Stakedown Assembly Fig 11-3r01

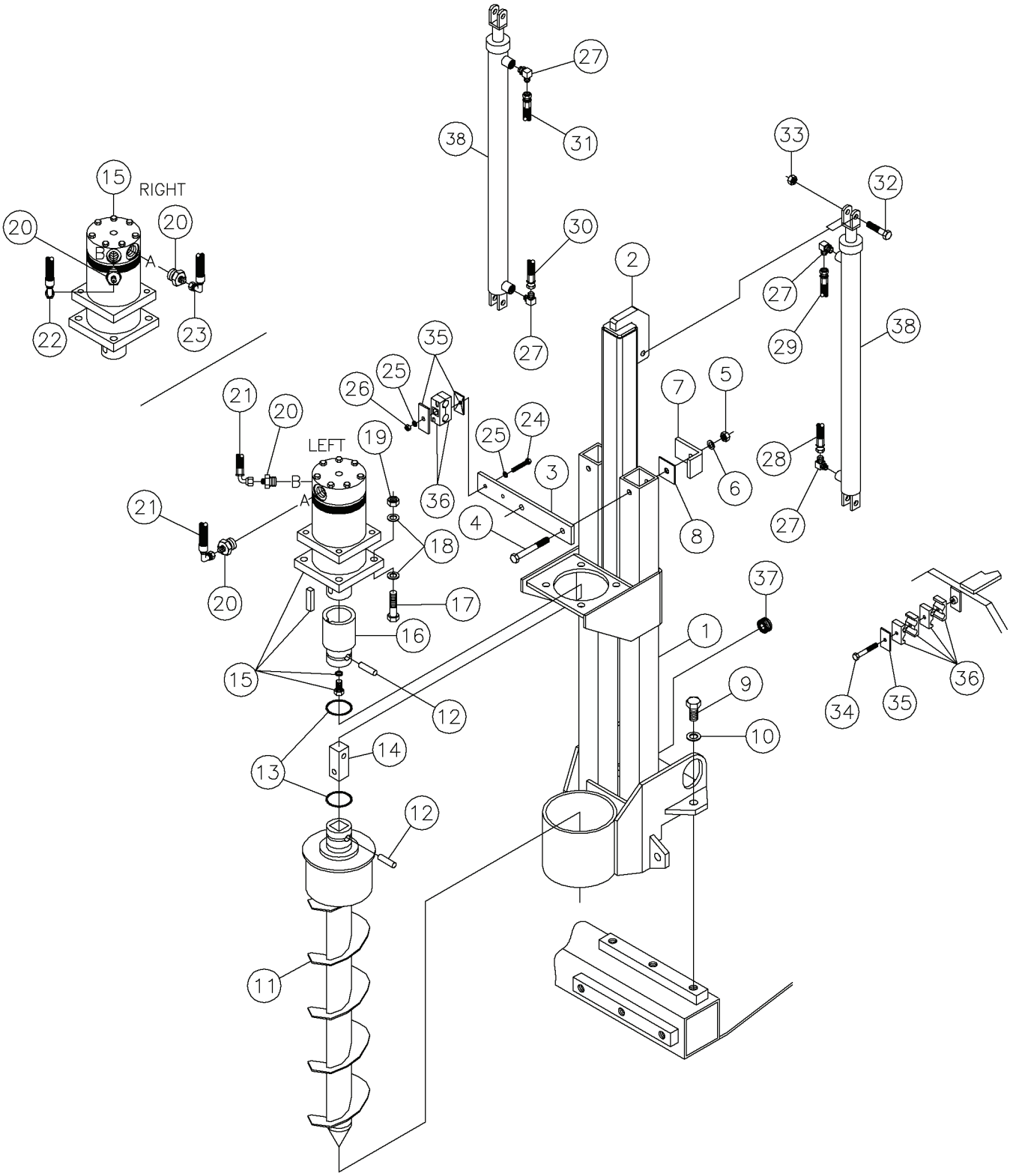

Stationary Stakedown Assembly Fig 11-3r01

REF. NO.	*	PART NO.	DESCRIPTION	QTY.	REMARKS
		Revision Date	June, 2004		Update In Illustration & Parts List.
1		235916001	TOWER-STAKEDOWN	2	
2		296265765	MOUNT - SLIDE MOTOR	2	
3		279150001	BAR-LIGHT REINFORCEMENT	2	
4		238244001	BOLT 1/2”-13 X 4”GR8 HEX Y/ZIN	4	
5		235731001	NUT-1/2-13 GR8 ZINC PLTD	4	
6		485025	WASHER-1/2 FLAT-HARDENED-YZ	4	
7		236232001	BAR-GUIDE	4	
89		236233001	PLATE-SPACER	4	
9		385014	BOLT-3/4”-10X1 1/2 GR.8 HEX	8	
10		235717001	WASHER-3/4 FLAT HARDENED YELLOW ZINC	8	
11		232484001	STAKE-6” FLIGHT	2	
12		236200001	PIN-STAKE KEEPER	4	
13		236229001	O-RING - 329	4	
14		236230001	BAR-STAKE DRIVE	2	
15		236219001	HYD MOTOR-66CI	2	(BREAKDOWN FIG 14-9)
16		236205001	HUB-STAKE DRIVE	2	
17		238245001	BOLT 5/8” - 11 X 2 1/4 Gr 8 HEX	8	
18		235715001	WASHER-5/8 SAE HARD ZINC PLTD	16	
19		241065001	REPLACED BY 238221001	8	
20		64168001	12MX6 JIC M STR.	4	
21		278841001	HOSE-3/8X63 6FSJIC ST/90 M3K	2	
22		278840001	HOSE-3/8X90 6FSJIC ST/90 M3K	1	
23		278843001	HOSE-3/8X92 6FSJIC ST/90 M3K	1	
24		244147001	BOLT-5/16-18X2 1/4 GR8 ZINC PL	2	
25		235714001	WASHER - FLATSTRL - .31 - .34 X .69 - .06-YZ-A325	4	
26		235741001	NUT - HEX - .31 - 18 - GR8 -YZ	2	
27		60906001	4MX6M JIC 90 DEG ELBOW	4	
28		278271001	HOSE-3/8X17 6 FSJIC ST-90 M2T	1	
29		232125001	HOSE - HYD - 3/8 X 22 6FS JIC ST/ST	1	
30		57940259	HOSE-3/8X42 6FS JIC 3000 PSI	1	
31		57940619	HOSE-3/8X49 6FS JIC ST/90	1	
32		235718001	BOLT-1/2-13X2 GR8 HEX ZINC PLT	4	
33		75382001	NUT-1/2-UNC GRADE 8 SLTL	4	
34		248029001	BOLT-5/16-18X2 1/2 GR8 ZINC PL	1	
35		67846003	PLATE-TWIN COVER	3	
36		900035005	CLAMP-3/8”DOUBLE HOSE	4	
37		1865017	GROMMET-7/8IDX1.25OD 1/4GROOVE	2	
38		287588001		2	(BREAKDOWN FIG 14-39)

https://truckmanualshub.com/

Stationary Stakedown Assembly Fig 11-3

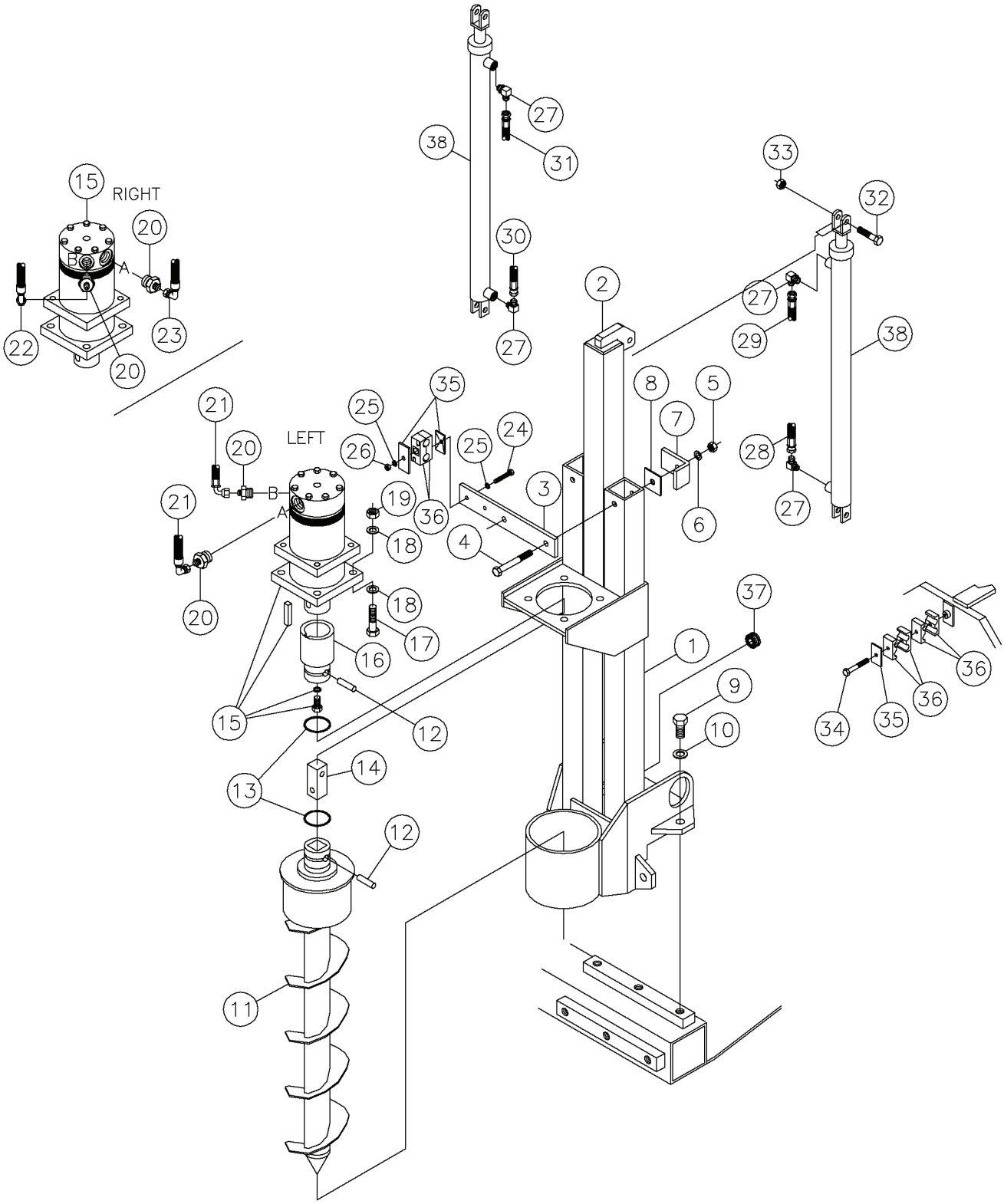

https://truckmanualshub.com/

Stationary Stakedown Assembly Fig 11-3

REF. NO.	*	PART NO.	DESCRIPTION	QTY.	REMARKS
1		235916001	TOWER-STAKEDOWN	2	
2		236210001	MOUNT-SLIDE MOTOR	2	S/N501 (DESIGN CHG)
3		279150001	BAR-LIGHT REINFORCEMENT	2	
4		238244001	BOLT 1/2”-13 X 4”GR8 HEX Y/ZIN	4	
5		235731001	NUT-1/2-13 GR8 ZINC PLTD	4	
6		485025	WASHER-1/2 FLAT-HARDENED-ZINC	4	
7		236232001	BAR-GUIDE	4	
8		236233001	PLATE-SPACER	4	
9		385014	BOLT-3/4”-10X1 1/2 GR.8 HEX	8	
10		235717001	WASHER-3/4 FLAT HARDENED YELLOW ZINC	8	
11		232484001	STAKE-6” FLIGHT	2	
12		236200001	PIN-STAKE KEEPER	4	
13		236229001	O-RING - 329	4	
14		236230001	BAR-STAKE DRIVE	2	
15		236219001	HYD MOTOR-66CI	2	(BREAKDOWN FIG 14-9)
16		236205001	HUB-STAKE DRIVE	2	
17		238245001	BOLT 5/8” - 11 X 2 1/4 GR 8 HEX	8	
18		235715001	WASHER-5/8 SAE HARD ZINC PLTD	16	
19		241065001	REPLACED BY 238221001	8	
20		64168001	FITTING - 12MX6 JIC M STR.	4	
21		278841001	HOSE-3/8X63 6FSJIC ST/90 M3K	2	
22		278840001	HOSE-3/8X90 6FSJIC ST/90 M3K	1	
23		278843001	HOSE-3/8X92 6FSJIC ST/90 M3K	1	
24		244147001	BOLT-5/16-18X2 1/4 GR8 ZINC PL	2	
25		235714001	WASHER-5/16 SAE HARD ZINC PLTD	4	
26		235741001	NUT-5/16-18 GR8 ZINC PLTD	2	
27		60906001	FITTING - 4MX6M JIC 90 DEG ELBOW	4	
28		278271001	HOSE-3/8X17 6 FSJIC ST-90 M2T	1	
29		232125001	HOSE-3/8” #301	1	
30		57940259	HOSE-3/8X42 6FS JIC 3000 PSI	1	
31		57940619	HOSE-3/8X49 6FS JIC ST/90	1	
32		235718001	BOLT-1/2-13X2 GR8 HEX ZINC PLT	4	
33		75382001	NUT-1/2-UNC GRADE 8 SLTL	4	
34		248029001	BOLT-5/16-18X2 1/2 GR8 ZINC PL	1	
35		67846003	PLATE-TWIN COVER	3	
36		900035005	CLAMP-3/8”DOUBLE HOSE	4	
37		1865017	GROMMET-7/8IDX1.25OD 1/4GROOVE	2	
38		287588001	CYLINDER - 1-1/2 X 24	2	(BREAKDOWN FIG 14-39)

https://truckmanualshub.com/

Stakedown Valve Assembly Fig 11-4r01

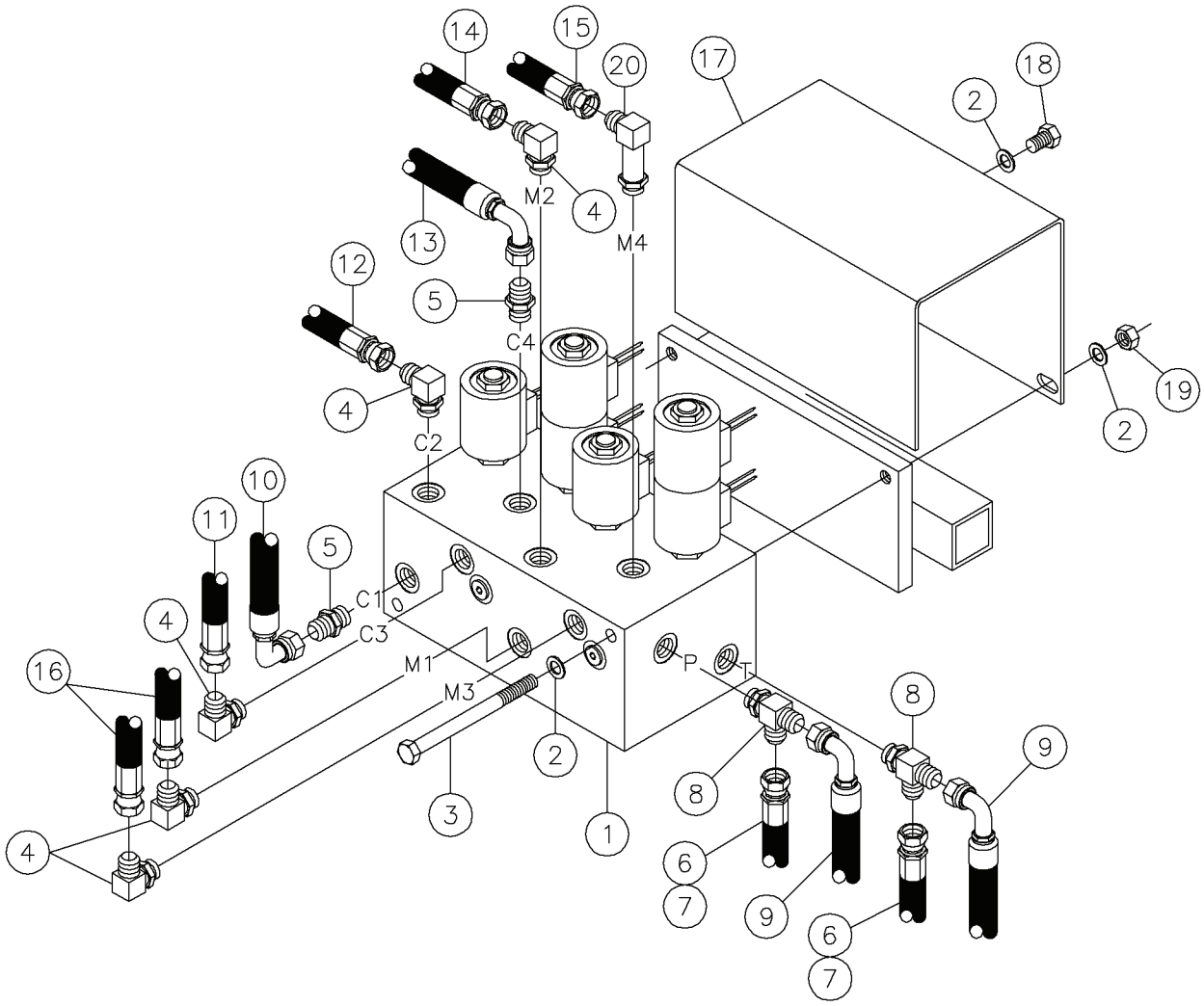

Stakedown Valve Assembly Fig 11-4r01

REF. NO.	*	PART NO.	DESCRIPTION	QTY.	REMARKS
		Revision Date	June, 2004		Update In Illustration & Parts List.
1		288660001	VALVE-ELECTRIC STAKEDOWN	1	(BREAKDOWN FIG 14-21)
2		235713001	WASHER - FLATSTRL - .38 - .41 X .81 - .06-YA-A325	6	
3		238214001	BOLT 3/8-16 X 6” Gr8 HEX Y\ZINC	2	
4		59426001	FITTING - 90-6MJ-6MORBA	5	
5		65565001	FITTING - 6M O-RING X 6M JIC ST.	2	
6		57940299	HOSE-3/8X102 6FS JIC 3000 PSI	2	
7		294617001	HOSE - HYD - .38 X 81 - 6FSJ - ST/90 - 3000PSI	2	
8		68774001	FITTING-6MX6M JIC (RUN)X6M JIC	2	
9		279052001	HOSE-3/8 X 54 FSJIC X FSJIC 90	2	
10		278271001	HOSE-3/8X17 6 FSJIC ST-90 M2T	1	
11		232125001	HOSE - HYD - 3/8 X 22 6FS JIC ST/ST	1	
12		57940259	HOSE-3/8X42 6FS JIC 3000 PSI	1	
13		57940619	HOSE-3/8X49 6FS JIC ST/90	1	
14		278840001	HOSE-3/8X90 6FSJIC ST/90 M3K	1	
15		278843001	HOSE-3/8X92 6FSJIC ST/90 M3K	1	
16		278841001	HOSE-3/8X63 6FSJIC ST/90 M3K	2	
17		279093001	SHIELD-VALVE	1	
18		240310001	SCREW - HCS - .38 - 16 X .50 - GR8 - YZ	1	
19		235725001	NUT - HEX - .38 - 16 - GR8 - YZ	1	
20		65570001	6M X 6M JIC 90 DEGREE LONG	1	

https://truckmanualshub.com/

Stakedown Valve Assembly Fig 11-4

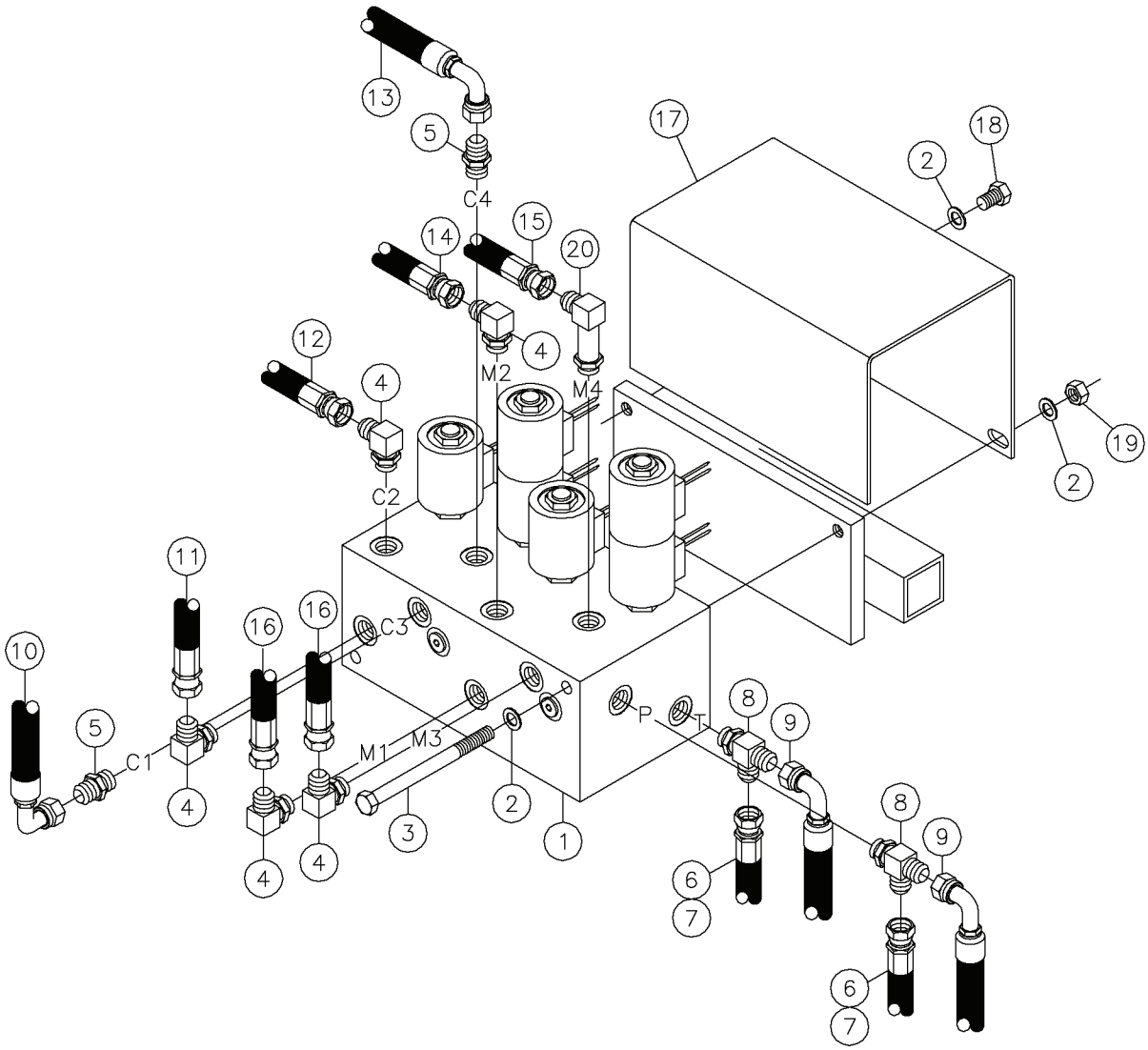

Stakedown Valve Assembly Fig 11-4

REF. NO.	*	PART NO.	DESCRIPTION	QTY.	REMARKS
1		288660001	VALVE-ELECTRIC STAKEDOWN	1	(BREAKDOWN FIG 14-21)
2		235713001	WASHER-3/8 SAE HARD ZINC PLTD	6	
3		238214001	BOLT 3/8-16 X 6” GR8 HEX Y\ZINC	2	
4		59426001	FITTING - 6M JIC X 6M O-RING ADJ 90 ELBOW	5	
5		65565001	FITTING - 6M O-RING X 6M JIC ST.	2	
6		57940299	HOSE-3/8X102 6FS JIC 3000 PSI	2	
7		294617001	HOSE - HYD - .38 X 81 - 6FSJ - ST/90 - 3000PSI	2	
8		68774001	FITTING-6MX6M JIC (RUN)X6M JIC	2	
9		279052001	HOSE-3/8 X 54 FSJIC X FSJIC 90	2	
10		278271001	HOSE-3/8X17 6 FSJIC ST-90 M2T	1	
11		252125001	REAR COVER	1	
12		57940259	HOSE-3/8X42 6FS JIC 3000 PSI	1	
13		57940619	HOSE-3/8X49 6FS JIC ST/90	1	
14		278840001	HOSE-3/8X90 6FSJIC ST/90 M3K	1	
15		278843001	HOSE-3/8X92 6FSJIC ST/90 M3K	1	
16		278841001	HOSE-3/8X63 6FSJIC ST/90 M3K	2	
17		279093001	SHIELD-VALVE	1	
18		240310001	BOLT-3/8-16X1/2 GR8 ZINC PLTD	1	
19		235725001	NUT-3/8-16 GR8 ZINC PLTD	1	
20		65570001	FITTING - 6M X 6M JIC 90 DEGREE LONG	1	

https://truckmanualshub.com/

Location Package, Mark III - Digitrak - Domestic & International Fig 12-1r01

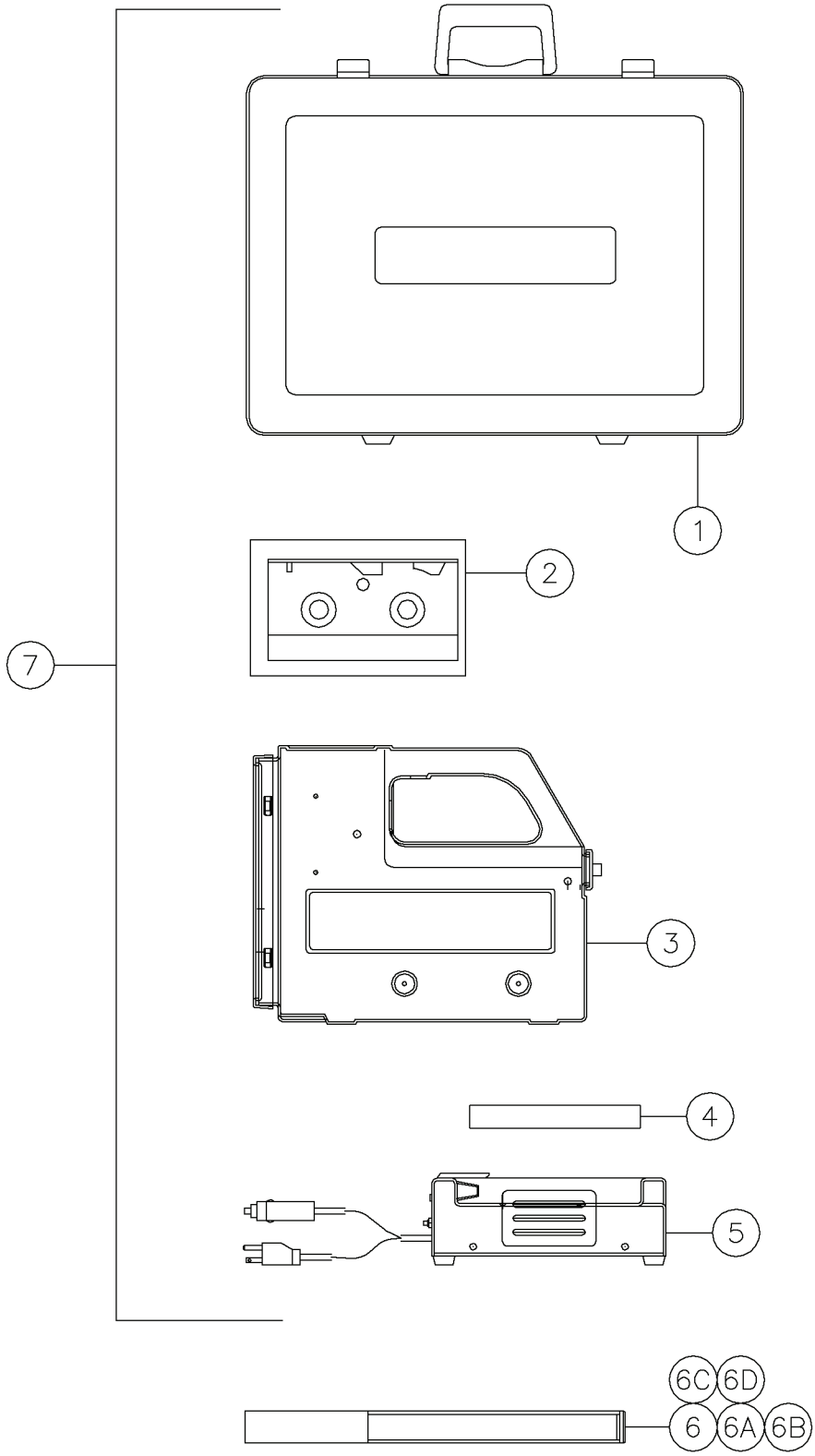

https://truckmanualshub.com/

Location Package, Mark III - Digitrak - Domestic & International Fig 12-1r01

REF. NO.	*	PART NO.	DESCRIPTION	QTY.	REMARKS
		Revision Date	June, 2004		Update In Parts List.
1		213389011	CARRYING CASE	1	
2		231990001	DIGITRAK OP. MAN. TRAIN VIDEO	1	
3		231991001	MARK III STANDARD RECEIVER (NON-REMOTE CAPABLE)	1	
4		213389009	BATTERY PACK	2	
5		213389007	BATTERY CHARGER 115/230V	1	
6		221806001	15’ SHORT RANGE TRANSMITTER (BLUE)	1	
6A		213389005	40’ STANDARD RANGE SONDE (YELLOW) (LOC111)	1	
6B		221643001	70’ LONG RANGE SONDE (RED)(LOC112)	1	
6C		226196001	70’LONG RANGE SONDE W/ EXT.BATT.(RED) (LOC113)	1	
6D		213086001	O-RING #122	3	
7		231212001	MARK III STANDARD SYSTEM (LOC005)	1	(INC REF 1-5)

https://truckmanualshub.com/

Location Package, Mark III - Digitrak - Domestic & International Fig 12-1

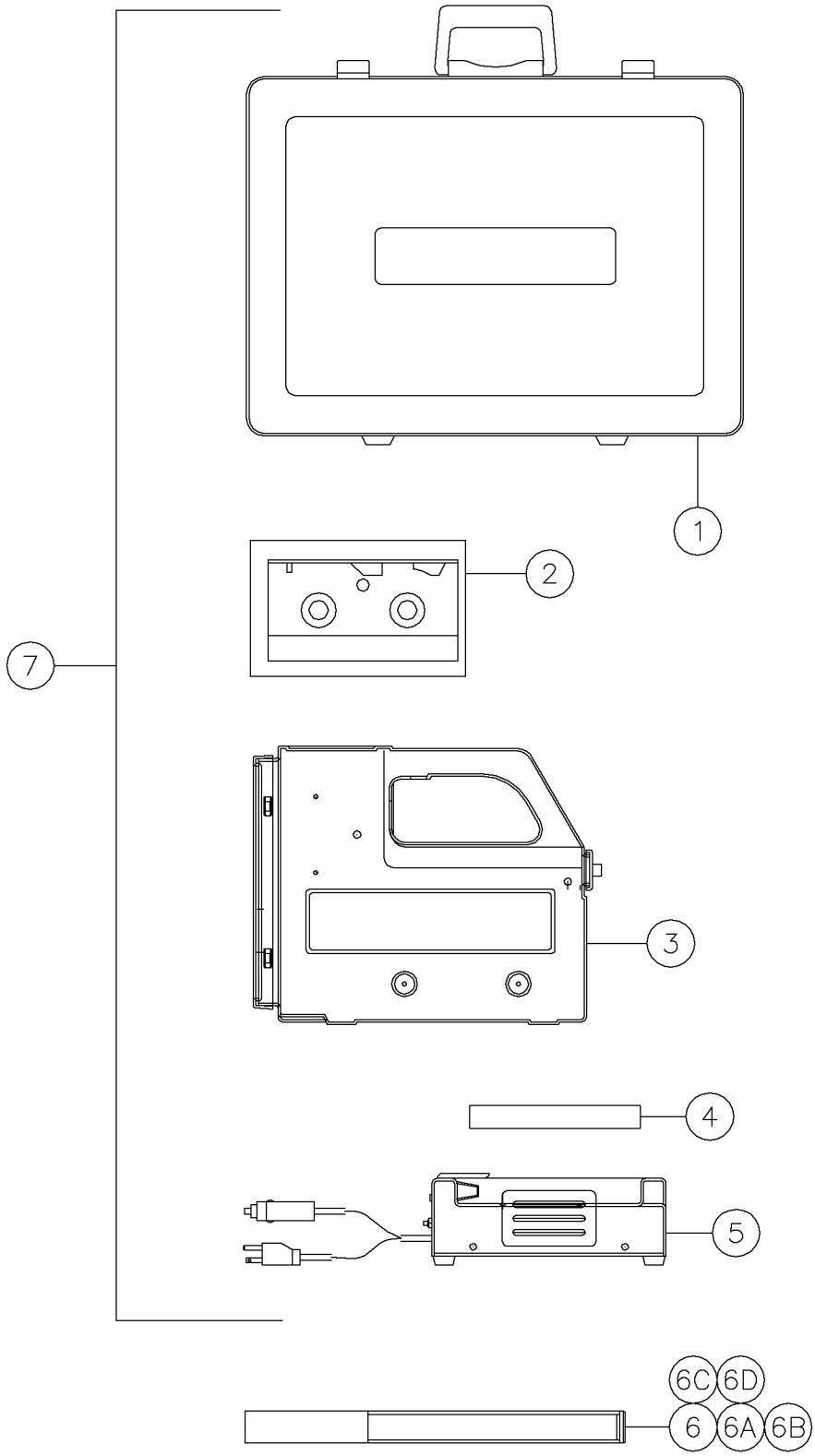

https://truckmanualshub.com/

Location Package, Mark III - Digitrak - Domestic & International Fig 12-1

REF. NO.	*	PART NO.	DESCRIPTION	QTY.	REMARKS
1		213389011	CARRYING CASE	1	
2		213990001	DIGITRAK OP MAN TRAIN VIDEO	1	
3		231991001	MARK III STANDARD RECEIVER (NON-REMOTE CAPABLE)	1	
4		213389009	BATTERY PACK	2	
5		213389007	BATTERY CHARGER 115/230V	1	
6		221806001	TRANSMITTER - 15’ SHORT RANGE (BLUE)	1	
6A		213389005	SONDE - 40’ STANDARD RANGE (YELLOW) (LOC111)	1	
6B		221643001	SONDE - 70’ LONG RANGE (RED)(LOC112)	1	
6C		226196001	SONDE - 70’LONG RANGE W/ EXT.BATT.(RED) (LOC113)	1	
6D		213086001	O-RING #122	3	
7		231212001	MARK III STANDARD LOCATOR (LOC005)	1	(INC REF 1-5)

https://truckmanualshub.com/

Location Package, Mark III - Digitrak (W/remote Display) Domestic Fig 12-2r01

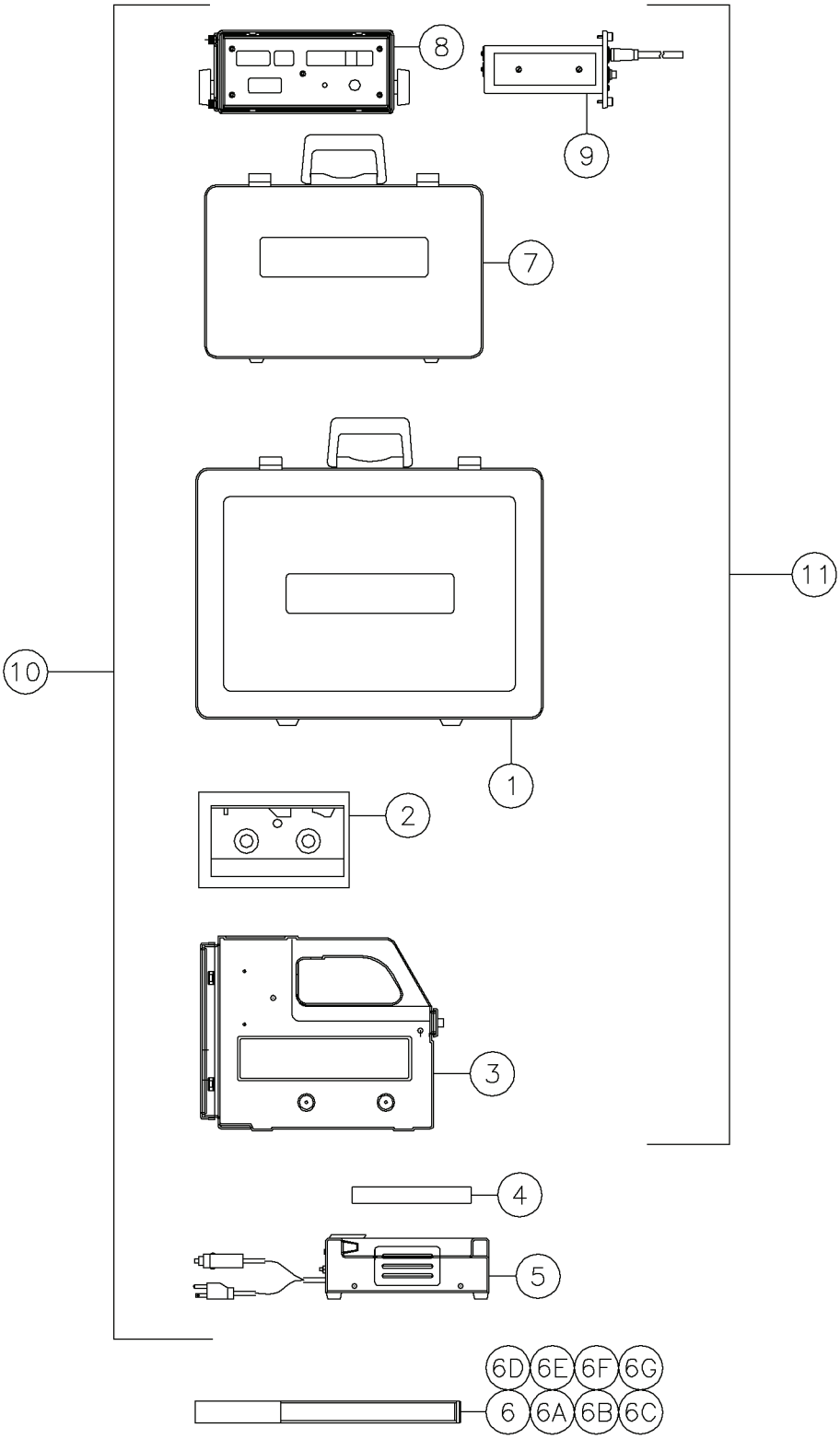

https://truckmanualshub.com/

Location Package, Mark III - Digitrak (W/remote Display) Domestic Fig 12-2r01

REF. NO.	*	PART NO.	DESCRIPTION	QTY.	REMARKS
		Revision Date	July, 2004		Update In Parts List.
1		213389011	CARRYING CASE	1	Standard & Cable Sonde
2		231990001	DIGITRAK OP. MAN. TRAIN VIDEO	1	Standard & Cable Sonde
3		231991001	MARK III STANDARD RECEIVER (NON-REMOTE CAPABLE)	1	Standard
4		213389009	BATTERY PACK	1	Standard
5		213389007	BATTERY CHARGER 115/230V	2	Standard
6		221806001	15’ SHORT RANGE TRANSMITTER (BLUE)	1	Standard
6A		213389005	40’ STANDARD RANGE SONDE (YELLOW) (LOC111)	1	Standard
6B		221643001	70’ LONG RANGE SONDE (RED)(LOC112)	1	Standard
6C		226196001	70’LONG RANGE SONDE W/ EXT.BATT.(RED) (LOC113)	1	Standard
6D		226197001	70’LONG RANGE SONDE W/0.1% PITCH(MAGENTA)(LOC114)	1	Standard
6E		226198001	70’ LR SONDE W/0.1PITCH-EXT. BATT. (MGT) (LOC115)	1	Standard
6F		226199001	100’ CABLE SONDE (GREEN)(LOC120)	1	Cable Sonde
6G		226200001	100’ CABLE SONDE W/ 0.1% PITCH (MAGENTA)(LOC121)	1	Cable Sonde
6H		213086001	O-RING #122	3	Standard & Cable Sonde
7		221658001	REMOTE CARRYING CASE	1	Standard & Cable Sonde
8		231993001	DIGITRAK REMOTE DISPLAY	1	Standard & Cable Sonde
8A		231994001	US REMOTE DISPLY FOR CABLE TRANSMITTER	1	Cable Sonde
9		226195001	CABLE SONDE POWER SUPPLY	1	Cable Sonde
10		231218001	MARK III SYSTEM W/REMOTE DISPLAY (LOC025)	1	Standard &Cable Sonde (INC REF 1-5, 7 & 8)
11		231221001	MARK III SYSTEM W/CABLE TRANSMITTER	1	Standard &Cable Sonde (INC REF 1-3, 7 & 9)

https://truckmanualshub.com/

Location Package, Mark III - Digitrak (W/remote Display) Domestic Fig 12-2

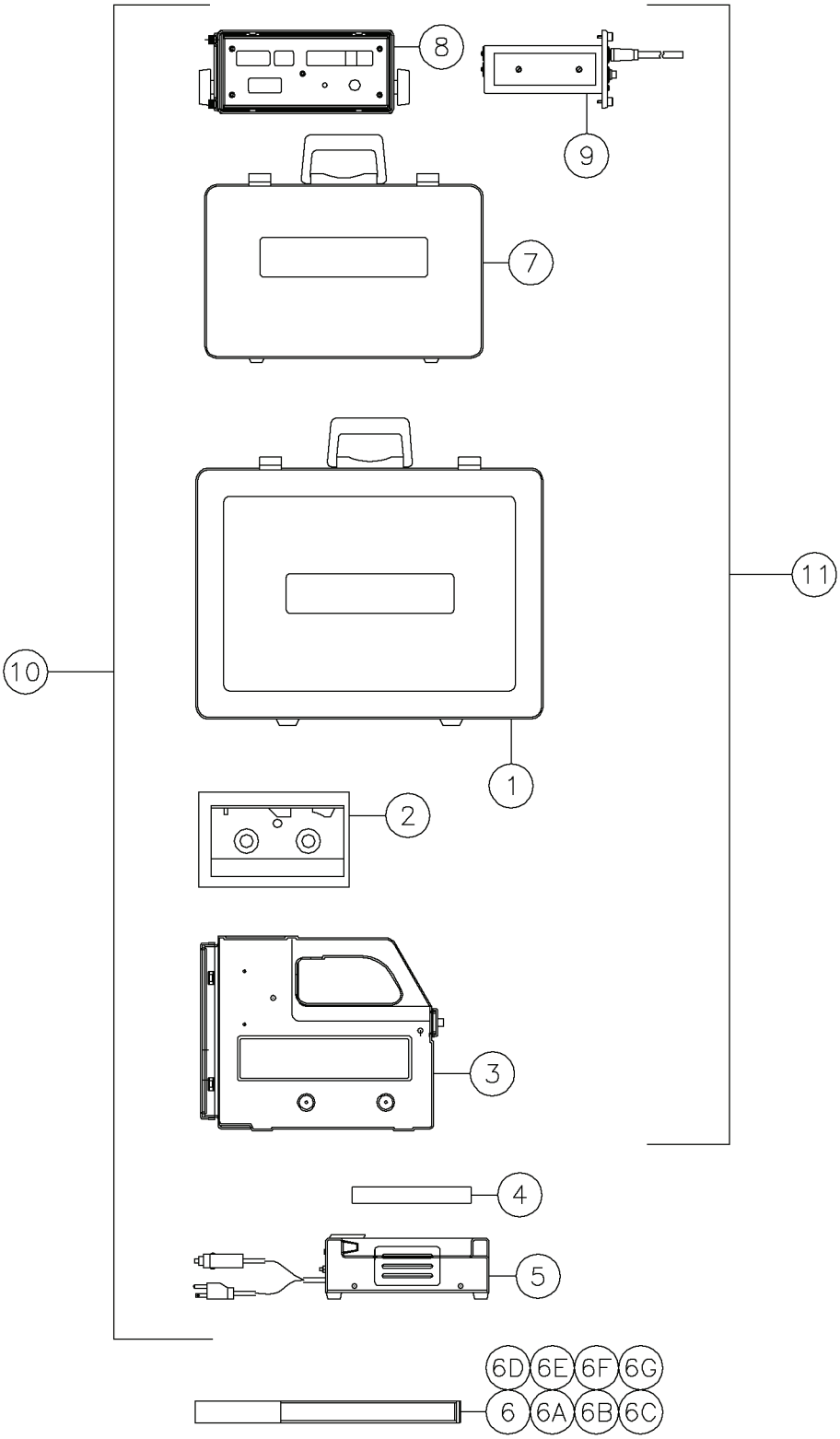

https://truckmanualshub.com/

Location Package, Mark III - Digitrak (W/remote Display) Domestic Fig 12-2

REF. NO.	*	PART NO.	DESCRIPTION	QTY.	REMARKS
1		213389011	CARRYING CASE	1	
2		231990001	DIGITRAK OP. MAN. TRAIN VIDEO	1	
3		231992001	MARK III RECEIVER W/REMOTE CAPABILITY ENGLISH/METR	1	
4		213389009	BATTERY PACK	1	
5		213389007	BATTERY CHARGER 115/230V	2	
6		221806001	TRANSMITTER - 15’ SHORT RANGE (BLUE)	1	
6A		213389005	SONDE - 40’ STANDARD RANGE (YELLOW) (LOC111)	1	
6B		221643001	SONDE - 70’ LONG RANGE (RED)(LOC112)	1	
6C		226196001	SONDE - 70’ LONG RANGE W/ EXT.BATT.(RED) (LOC113)	1	
6D		226197001	70’LONG RANGE SONDE W/0.1% PITCH(MAGENTA)(LOC114)	1	
6E		226198001	SONDE-70’ LR W/0.1PITCH-EXT. BATT. (MGT) (LOC115)	1	
6F		226199001	SONDE - 100’ CABLE (GREEN)(LOC120)		
6G		226200001	SONDE - 100’ CABLE W/ 0.1% PITCH (MAGENTA)(LOC121)		
6H		213086001	O-RING #122	3	
7		221658001	REMOTE CARRYING CASE	1	
8		231993001	DIGITRAK REMOTE DISPLAY	1	
8A		231994001	US REMOTE DISPLY FOR CABLE TRANSMITTER		
9		226195001	CABLE SONDE POWER SUPPLY		
10		231218001	MARK III LOCATOR W/REMOTE DISPLAY (LOC025)	1	(INC REF 1-5, 7 & 8)
11		231221001	MARK III LOCATOR W/REMOTE CABLE TRANSMITTER	1	(INC REF 1-3, 7 & 9)

Location Package, Mark III - Digitrak (W/remote Display) International Fig 12-3r01

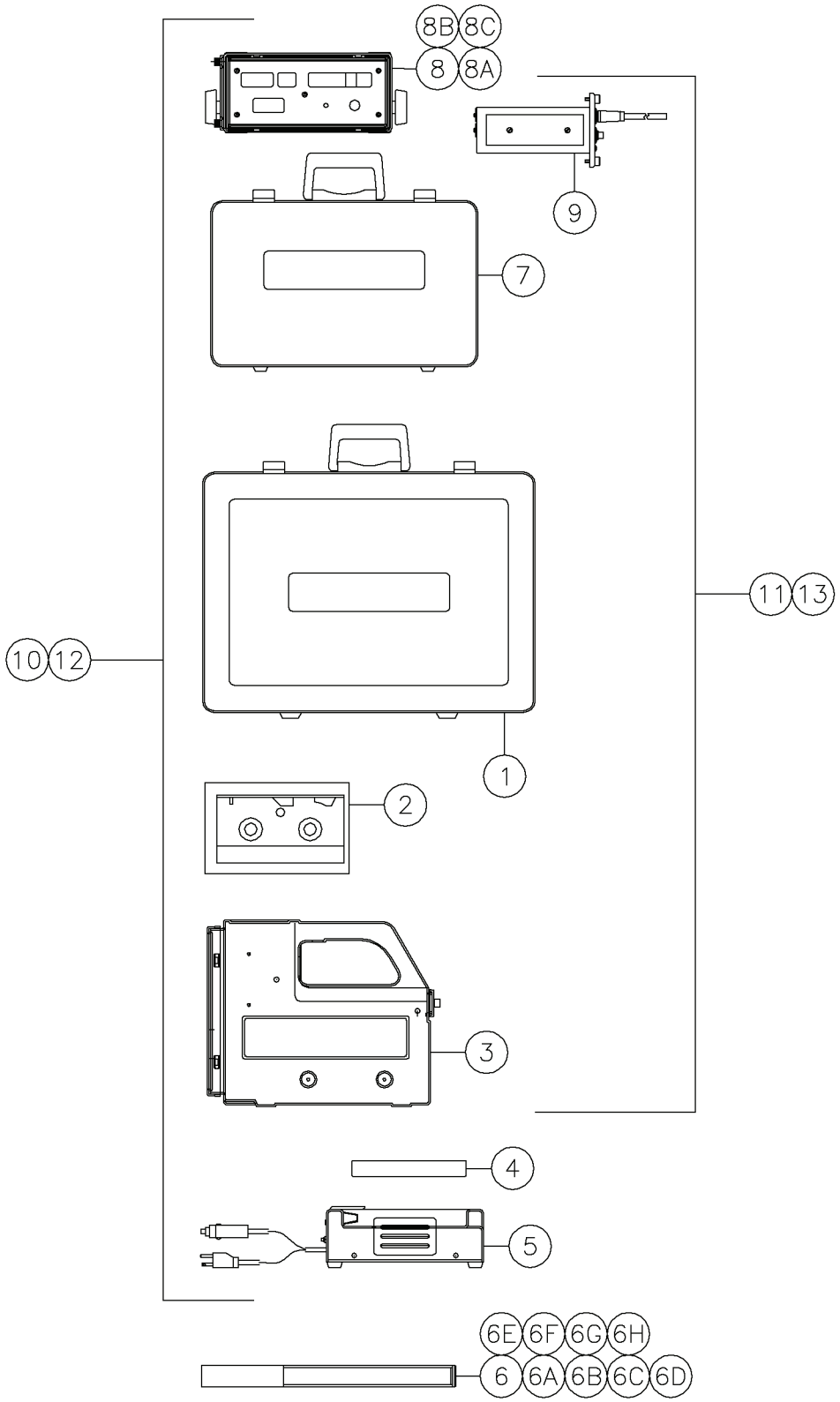

https://truckmanualshub.com/

Location Package, Mark III - Digitrak (W/remote Display) International Fig 12-3r01

REF. NO.	*	PART NO.	DESCRIPTION	QTY.	REMARKS
		Revision Date	July, 2004		Update In Parts List.
1		213389011	CARRYING CASE	1	Standard & Cable Sonde
2		231990001	DIGITRAK OP. MAN. TRAIN VIDEO	1	Standard & Cable Sonde
3		231995001	RECEIVER W/REMOTE FUNCTION AU	1	Standard & Cable Sonde
4		213389009	BATTERY PACK	1	Standard & Cable Sonde
5		213389007	BATTERY CHARGER 115/230V	2	Standard & Cable Sonde
6		221806001	15’ SHORT RANGE TRANSMITTER (BLUE)	1	Standard
6A		213389005	40’ STANDARD RANGE SONDE (YELLOW) (LOC111)	1	Standard
6B		221643001	70’ LONG RANGE SONDE (RED)(LOC112)	1	Standard
6C		226196001	70’LONG RANGE SONDE W/ EXT.BATT.(RED) (LOC113)	1	Standard
6D		226197001	70’LONG RANGE SONDE W/0.1% PITCH(MAGENTA)(LOC114)	1	Standard
6E		226198001	70’ LR SONDE W/0.1PITCH-EXT. BATT. (MGT) (LOC115)	1	Standard
6F		226199001	100’ CABLE SONDE (GREEN)(LOC120)		Cable Sonde
6G		226200001	100’ CABLE SONDE W/ 0.1% PITCH (MAGENTA)(LOC121)		Cable Sonde
6H		213086001	O-RING #122	3	Standard & Cable Sonde
7		221658001	REMOTE CARRYING CASE	1	Standard & Cable Sonde
8		231997001	REMOTE DISPLAY AU	1	Standard & Cable Sonde
8A		231998001	REMOTE DISPLY FOR CBLE SOND AU	1	Standard & Cable Sonde
8B		231999001	REMOTE DISPLAY UK	1	Standard & Cable Sonde
8C		226192001	REMOTE DISPLAY FOR CABLE SOND UK	1	Standard & Cable Sonde
9		226195001	CABLE SONDE POWER SUPPLY	1	Standard & Cable Sonde
10		231219001	MARK III SYSTEM W/REMOTE DISPLAY (AU) (LOC027)	1	Standard & Cable Sonde (INC REF 1-5, 7 & 8)
11		231222001	MARKIII SYSTEM W/CABLE TRANSMITTER REMOTE DISPLAY	1	Standard & Cable Sonde (INC REF 1-3, 7 & 9)
12		231220001	MARK III SYSTEM W/REMOTE DISPLAY (UK) (LOC029)	1	Standard & Cable Sonde (INC REF 1-5, 7 & 8)
13		231223001	MARK III SYSTEM W/CABLE TRANSMITTER REMOTE DISPLAY	1	Standard & Cable Sonde (INC REF 1-3, 7 & 9)

https://truckmanualshub.com/

Location Package, Mark III - Digitrak (W/remote Display) International Fig 12-3

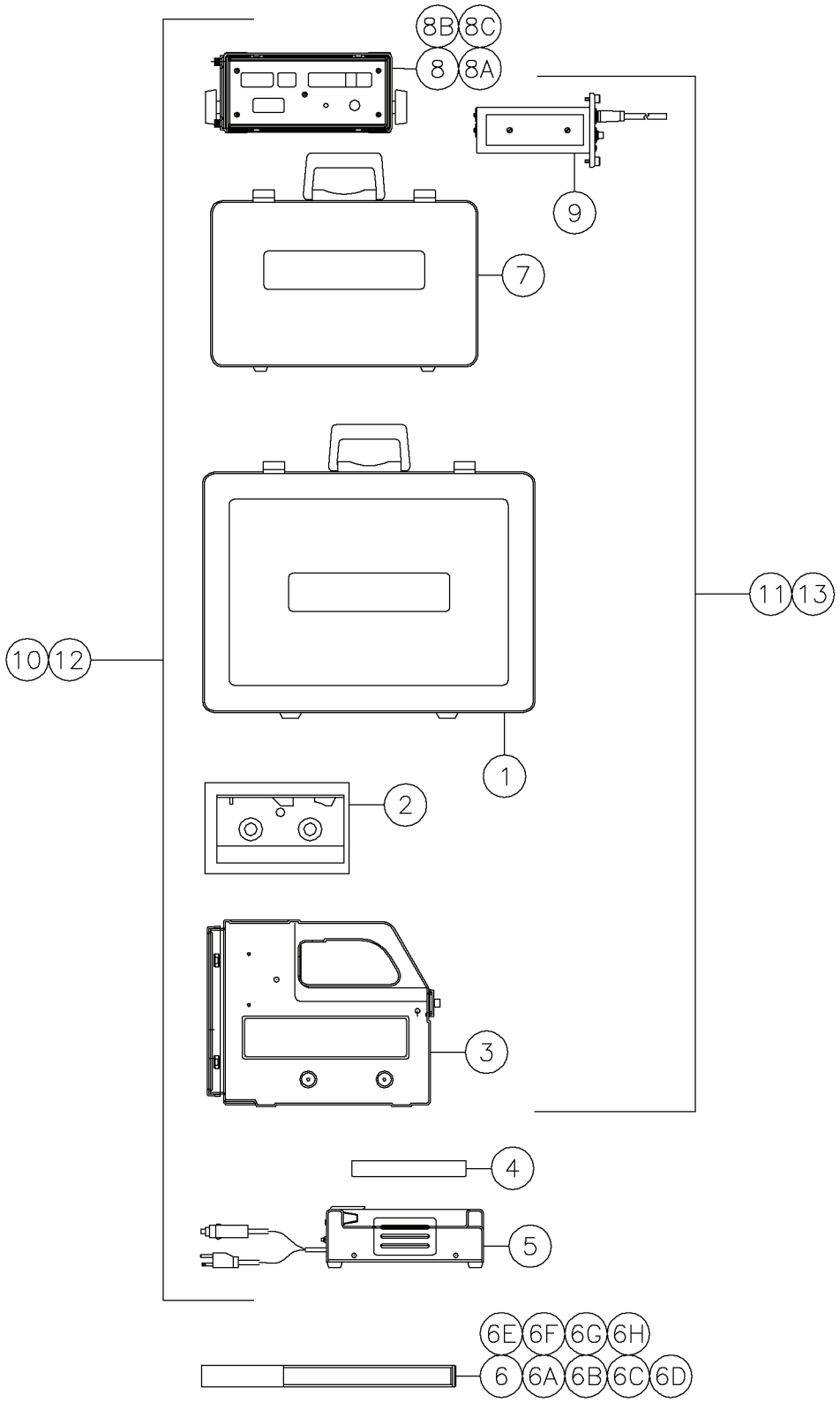

https://truckmanualshub.com/

Location Package, Mark III - Digitrak (W/remote Display) International Fig 12-3

REF. NO.	*	PART NO.	DESCRIPTION	QTY.	REMARKS
1		213389011	CARRYING CASE	1	
2		231990001	DIGITRAK OP. MAN. TRAIN VIDEO	1	
3		231995001	RECEIVER W/REMOTE FUNCTION AU	1	
3A		231996001	RECEIVER W/REMOTE FUNCTION UK	1	
4		213389009	BATTERY PACK	2	
5		213389007	BATTERY CHARGER 115/230V	1	
6		221806001	TRANSMITTER-15’ SHORT RANGE (BLUE)	1	
6A		213389005	SONDE-40’ STANDARD RANGE (YELLOW) (LOC111)	1	
6B		221643001	SONDE-70’ LONG RANGE (RED)(LOC112)	1	
6C		226196001	SONDE-70’LONG RANGE W/ EXT.BATT.(RED) (LOC113)	1	
6D		226197001	SONDE-70’LONG RANGE W/0.1% PITCH(MAGENTA)(LOC114)	1	
6E		226198001	SONDE-70’ LR W/0.1PITCH-EXT. BATT. (MGT) (LOC115)	1	
6F		226199001	SONDE-100’ CABLE (GREEN)(LOC120)		
6G		226200001	SONDE-100’ CABLE W/ 0.1% PITCH (MAGENTA)(LOC121)		
6H		213086001	O-RING #122	3	
7		221658001	REMOTE CARRYING CASE	1	
8		231997001	REMOTE DISPLAY AU	1	
8A		231998001	REMOTE DISPLY FOR CBLE SOND AU	1	
8B		231999001	REMOTE DISPLAY UK	1	
8C		226192001	REMOTE DISPLAY FOR CABLE SOND UK	1	
9		226195001	CABLE SONDE POWER SUPPLY	1	
10		231219001	MARK III LOCATOR W/REMOTE DISPLAY (AU) (LOC027)	1	(INC REF 1-5, 7 & 8)
11		231222001	MARKIII REMOTE CABLE TRANSMITTER SYS (AU) (LOC037)	1	(INC REF 1-3, 7-9)
12		231220001	MARK III LOCATOR W/REMOTE DISPLAY (UK) (LOC029)	1	(INC REF 1-5, 7 & 8)
13		231223001	MARK III REMOTE CABLE TRANS. SYSTEM (UK) (LOC039)	1	(INC REF 1-3, 7-9)

https://truckmanualshub.com/

Data Logger, Mark III - Digitrak Fig 12-4

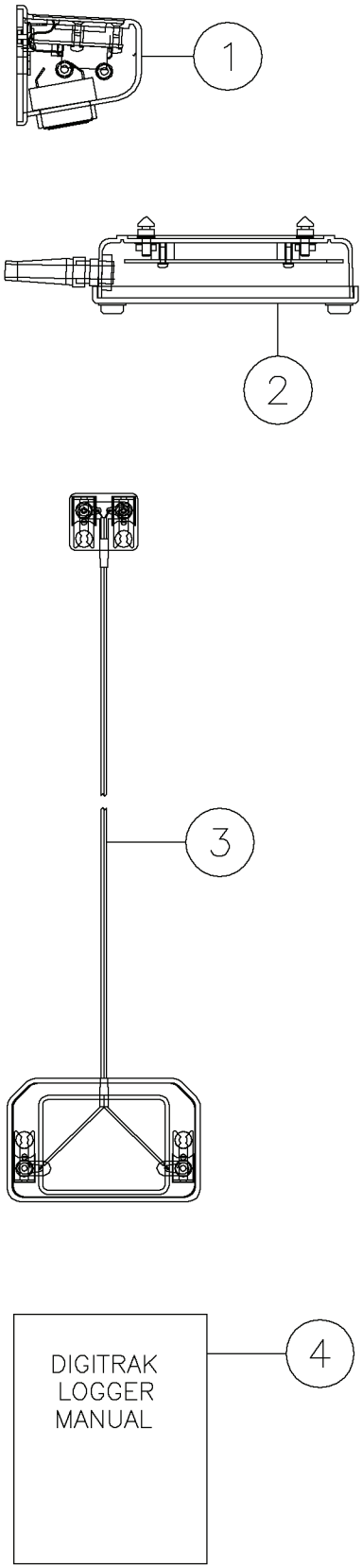

https://truckmanualshub.com/

Data Logger, Mark III - Digitrak Fig 12-4

REF. NO.	*	PART NO.	DESCRIPTION	QTY.	REMARKS
1		231224001	DATALOG MODULE	1	
2		231228001	DATALOG/PC INTERFACE	1	(INC REF 3 & 4)
3		238751001	DATA LOG REAL TIME CABLE	1	
4		238752001	DATA LOGGER MANUAL	1	

https://truckmanualshub.com/

Location Package, Spot D Tek II.2 Utility Fig 13-1

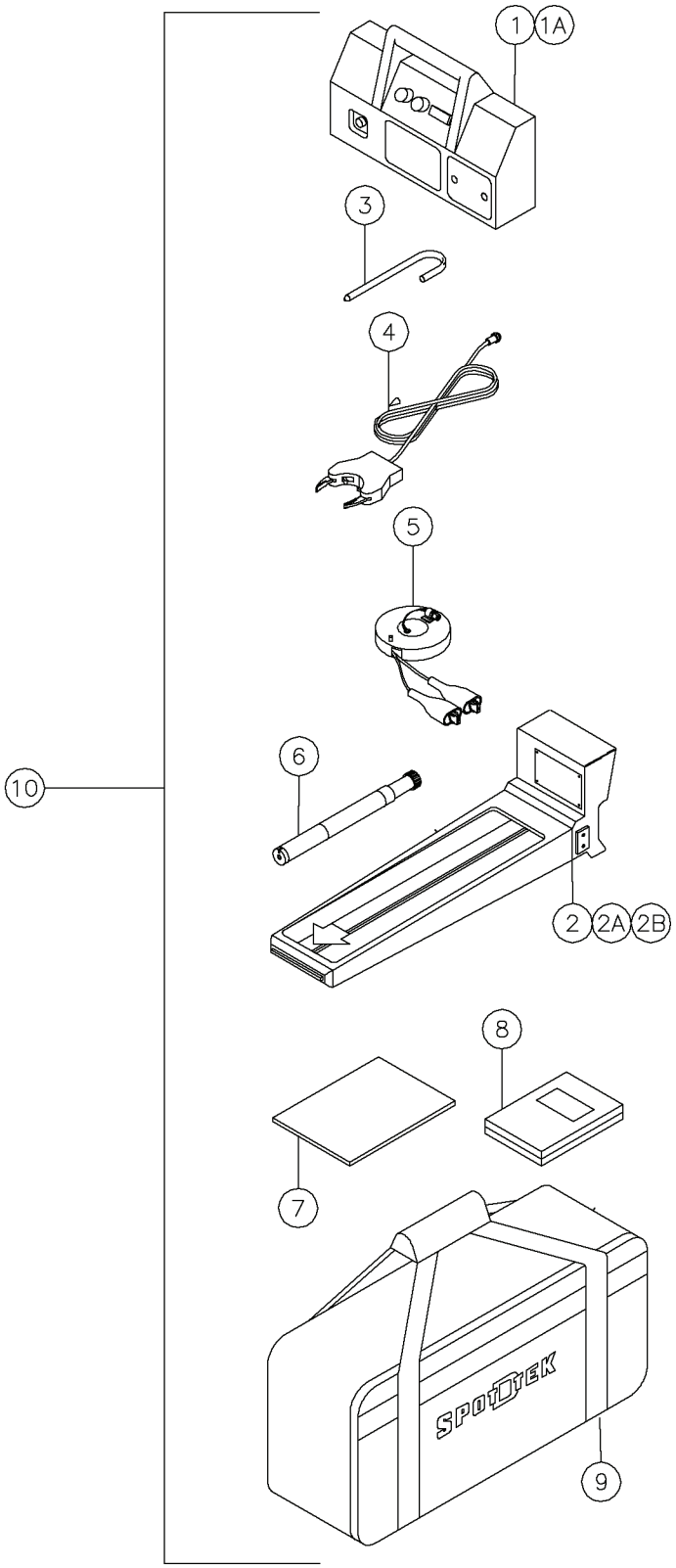

https://truckmanualshub.com/

Location Package, Spot D Tek II.2 Utility Fig 13-1

REF. NO.	*	PART NO.	DESCRIPTION	QTY.	REMARKS
1		213900003	TRANSMITTER FOR SPOT D TEK II	1	
1A		213900019	SUNSCREEN FOR TRANSMITTER	1	
2		215941001	RECEIVER II.2	1	
2A		213900023	SUNCSCREEN-RECEIVER II.2 MONIT	1	(NOT SHOWN)
2B		213900025	RAINCOVER-RECEIVER	1	(NOT SHOWN)
3		213900013	GROUND STAKE - SPOT D TEK II	1	
4		213900007	EXTERNAL COIL - SPOT D TEK II	1	
5		213900015	DIRECT CONNECTION CABLE	1	
6		215942001	DIR.PROBE II.2 (LOC100)	1	
7		215938003	OPERATIONAL MANUAL	1	
8		213900021	VIDEO TAPE	1	
9		213900009	CASE FOR SPOT D TEK II	1	
10		215938001	SPOTDTEK II.2 UTILITY LOC. PKG (LOC093)	1	(INC REF 1-9)

https://truckmanualshub.com/

Location Package, Spot D Tek II.2, III & IIIA Fig 13-2r01

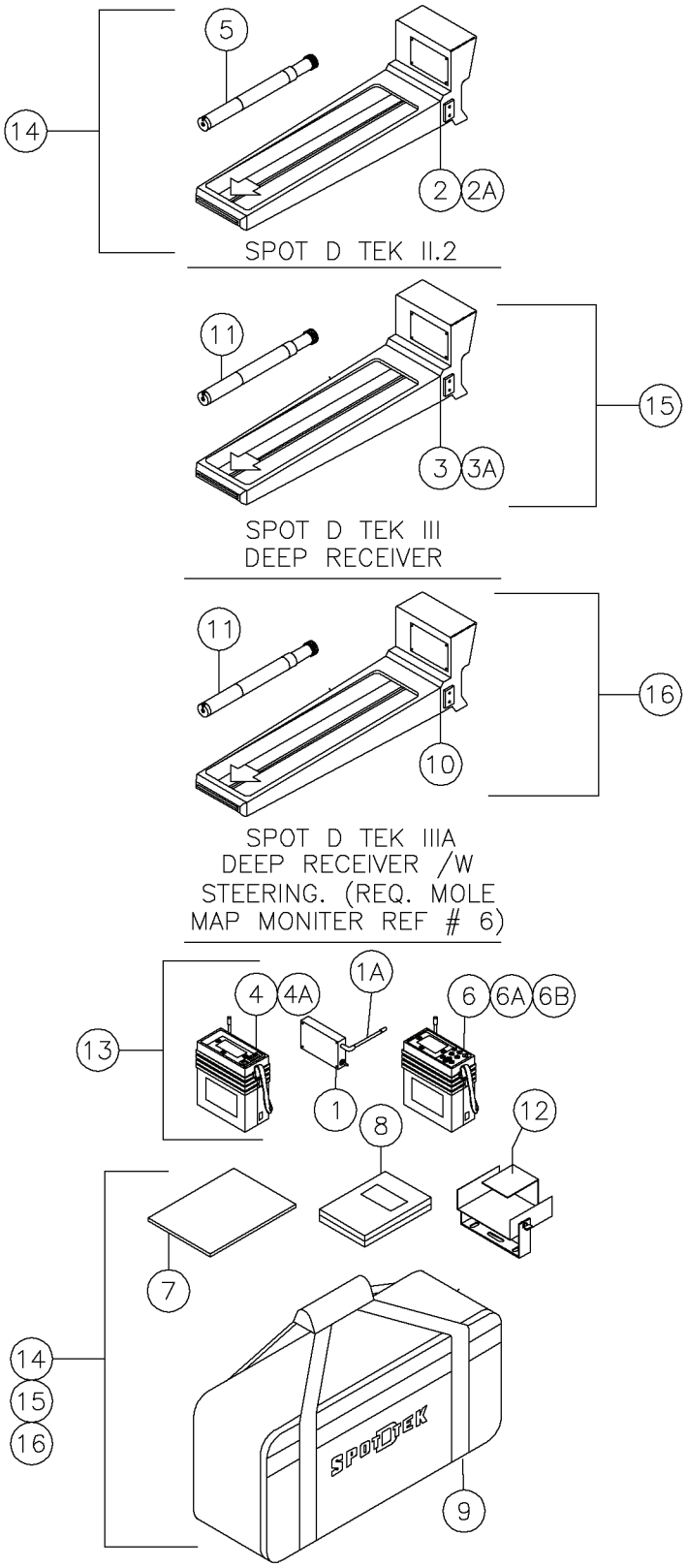

https://truckmanualshub.com/

Location Package, Spot D Tek II.2, III & IIIA Fig 13-2r01

REF. NO.	*	PART NO.	DESCRIPTION	QTY.	REMARKS
		Revision Date	June, 2004		Update In Parts List.
1		213902005	WIRELESS TRANSMITTER	1	
1A		216871001	ANTENNA-TRANSMITTER/MONITOR	1	(NOT SHOWN)
2		215941001	RECEIVER II.2	1	
2A		213900023	SUNCSCREEN-RECEIVER II.2 MONIT	1	(NOT SHOWN)
3		231197003	RECEIVER-III	1	
3A		213900025	RAINCOVER-RECEIVER	1	(NOT SHOWN)
4		215943001	WIRELESS MONITOR II.2	1	
4A		213902011	RAINCOVER-II.2 MONITOR	1	(NOT SHOWN)
5		215942001	DIR.PROBE II.2 (LOC100)	1	
6		231109001	MOLE MAP WIRELESS REMOTE MONITOR (LOC096)	1	
6A		238762001	SUNCSCREEN-MOLE MAP MONITOR	1	(NOT SHOWN)
6B		238763001	RAIN COVER-MOLE MAP MONITOR	1	(NOT SHOWN)
7		215938003	OPERATIONAL MANUAL	1	
8		215940003	VIDEO TAPE-INSTRUCTIONAL	1	(LOCATING PROBES)
9		213900009	CASE FOR SPOT D TEK II	1	
10		231111003	RECEIVER-IIIA	1	
11		231110001	SPOT-D-TEK DEEP SONDE (LOC097)	1	
12		244935001	HOLDER ASSY. - REMOTE MONITOR	1	
13		215940001	SPOTDTEK II.2 REMOTE MON. PKG. (LOC095)	1	(INC REF 1 & 4)
14		215939001	SPOTDTEK II.2 DIRECT.BORE PKG. (LOC091)	1	(INC REF 2, 5, 7-9)
15		231197001	SPOT-D-TEK III DEEP RECEIVER (LOC098)	1	(INC REF 3, 7-9)
16		231111001	SPOT-D-TEK IIIA DEEP REC W/REM (LOC094)	1	(INC REF 7-9, 10)

https://truckmanualshub.com/

Location Package, Spot D Tek II.2, III & IIIA Fig 13-2

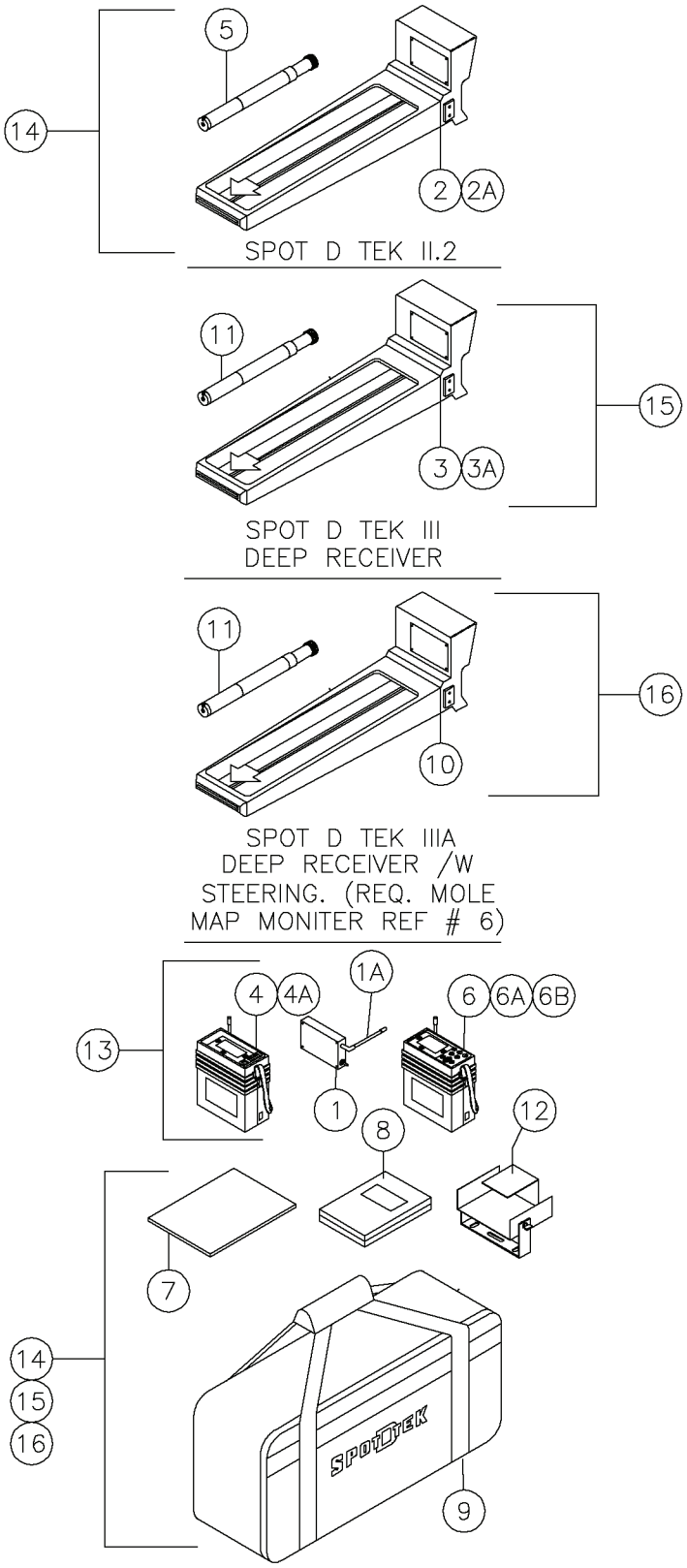

https://truckmanualshub.com/

Location Package, Spot D Tek II.2, III & IIIA Fig 13-2

REF. NO.	*	PART NO.	DESCRIPTION	QTY.	REMARKS
1		213902005	WIRELESS TRANSMITTER	1	
1A		216871001	ANTENNA-TRANSMITTER/MONITOR	1	(NOT SHOWN)
2		215941001	RECEIVER II.2	1	
2A		213900023	SUNCSCREEN-RECEIVER II.2 MONIT	1	(NOT SHOWN)
3		231197003	RECEIVER-III	1	
3A		213900025	RAINCOVER-RECEIVER	1	(NOT SHOWN)
4		215943001	WIRELESS MONTIOR II.2	1	
4A		213902011	RAINCOVER-II.2 MONITOR	1	(NOT SHOWN)
5		215942001	DIR.PROBE II.2 (LOC100)	1	
6		231109001	MOLE MAP WIRELESS REMOTE MONITOR (LOC096)	1	
6A		238762001	SUNSCREEN-MOLE MAP MONITOR	1	(NOT SHOWN)
6B		238763001	RAIN COVER-MOLE MAP MONITOR	1	(NOT SHOWN)
7		215938003	OPERATIONAL MANUAL	1	
8		215940003	VIDEO TAPE-INSTRUCTIONAL	1	(LOCATING PROBES)
9		213900009	CASE FOR SPOT D TEK II	1	
10		231111003	RECEIVER-IIIA	1	
11		231110001	SPOT-D-TEK DEEP SONDE (LOC097)	1	
12		244935001	HOLDER ASSY. - REMOTE MONITOR	1	
13		215940001	SPOTDTEK II.2 REMOTE MON. PKG. (LOC095)	1	(INC REF 1 & 4)
14		215939001	SPOTDTEK II.2 DIRECT.BORE PKG. (LOC091)	1	(INC REF 2, 5, 7-9)
15		231197001	SPOT-D-TEK III DEEP RECEIVER (LOC098)	1	(INC REF 3, 7-9)
16		231111001	SPOT-D-TEK IIIA DEEP REC W/REM (LOC094)	1	(INC REF 7-9, 10)

https://truckmanualshub.com/

Location Package, Spot D Tek Mole Mapping System Fig 13-3

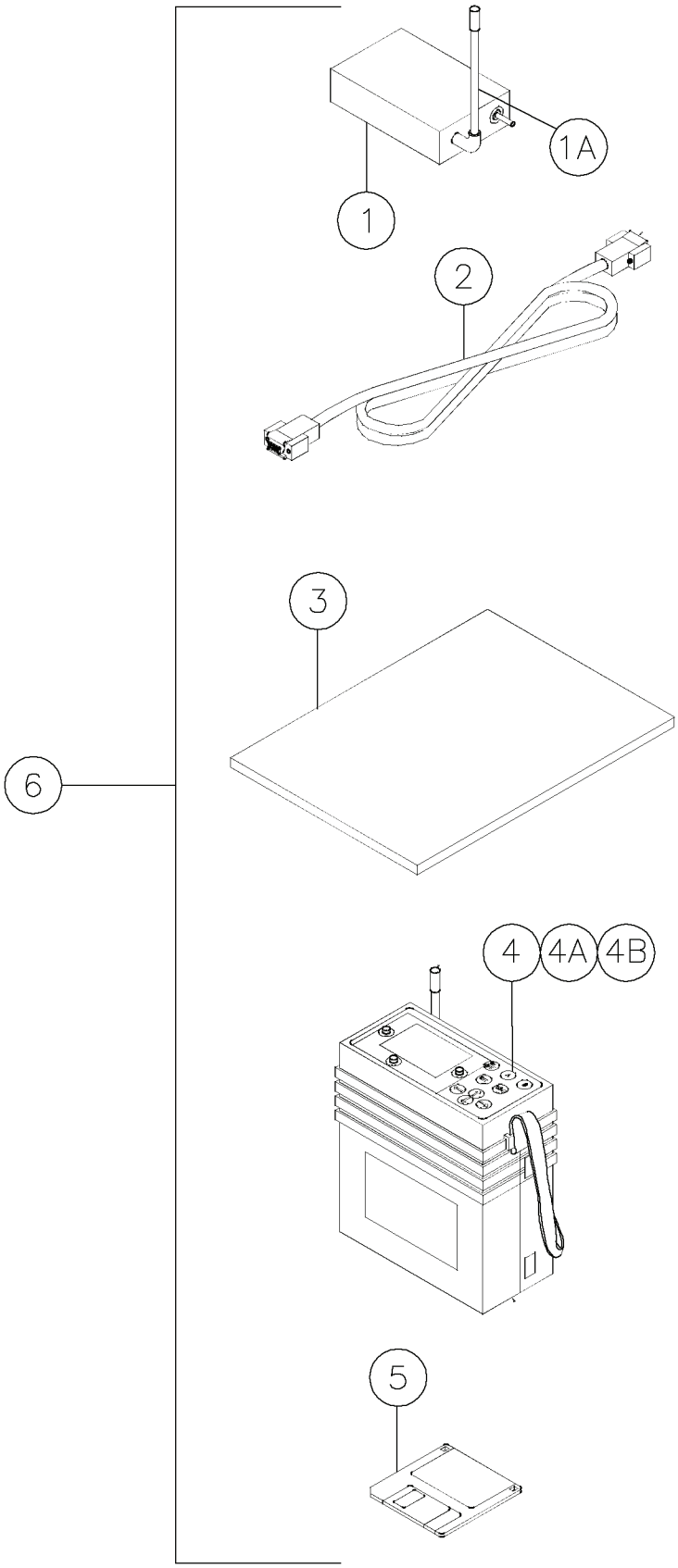

https://truckmanualshub.com/

Location Package, Spot D Tek Mole Mapping System Fig 13-3

REF. NO.	*	PART NO.	DESCRIPTION	QTY.	REMARKS
1		213902005	WIRELESS TRANSMITTER	1	
1A		216871001	ANTENNA-TRANSMITTER/MONITOR		(NOT SHOWN)
2		231109005	COMPUTER CORD	1	
3		231109007	OPERATIONAL MANUAL	1	
4		231109001	MOLE MAP WIRELESS REMOTE MONITOR (LOC096)	1	
4A		238763001	RAIN COVER-MOLE MAP MONITOR		(NOT SHOWN)
4B		238762001	SUNSCREEN-MOLE MAP MONITOR		(NOT SHOWN)
5		231109003	MAPPING SOFTWARE REPLACE DISK	1	
6		231113001	MOLE MAPPING SYSTEM COMPLETE (LOC099)		(INC REF 1-5)

https://truckmanualshub.com/

Spot D Tek II.2 Directional Probe (Repairable) Components Fig 13-4

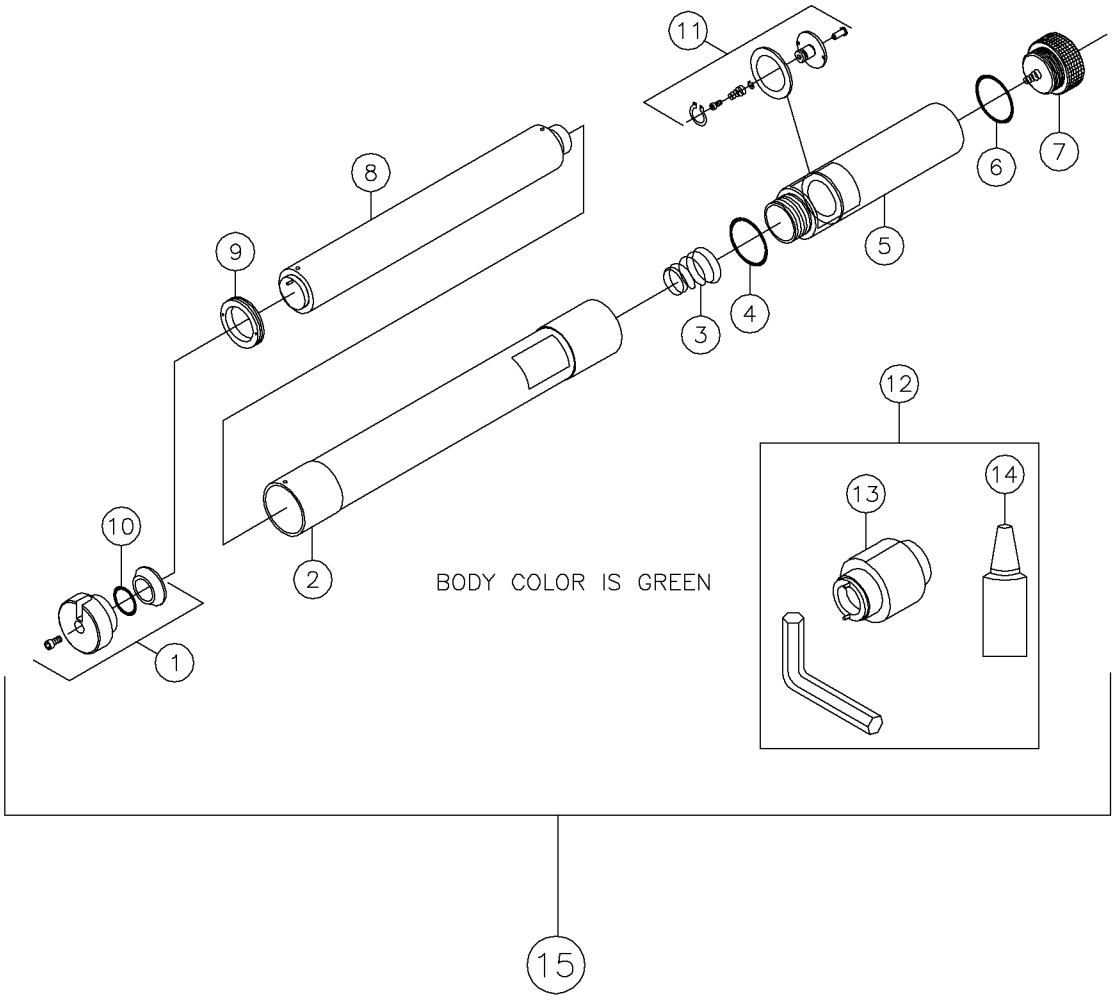

https://truckmanualshub.com/

Spot D Tek II.2 Directional Probe (Repairable) Components Fig 13-4

REF. NO.	*	PART NO.	DESCRIPTION	QTY.	REMARKS
1		215942003	SLOTTED HEAD ASSEMBLY	1	
2		215942005	FIBER PROBE BODY 11.2	1	
3		215942007	SPRING - SUSPENSION	1	
4		215942009	O-RING	1	
5		215942011	BATTERY COMPARTMENT ASSEMBLY	1	
6		215942013	O-RING	1	
7		215942015	BATTERY CAP ASSEMBLY	1	
8		215942017	SOLID STATE ELEC. CAPSULE 11.2	1	
9		215942019	ROUND SET NUT	1	
10		215942021	O-RING	1	
11		215942023	BATTERY CONTACT ASSEMBLY	1	
12		215942025	MAINTENANCE TOOL KIT	1	
13		215942027	TOOL-CAPSULE LINE-UP	1	
14		215942029	SEALANT-SILICONE	1	
15		215942001	DIR.PROBE II.2 (LOC100)	1	(INC ALL ITEMS IN FIGURE)

https://truckmanualshub.com/

Rotation Gearbox Components (S/N 563-) Fig 14-1r01

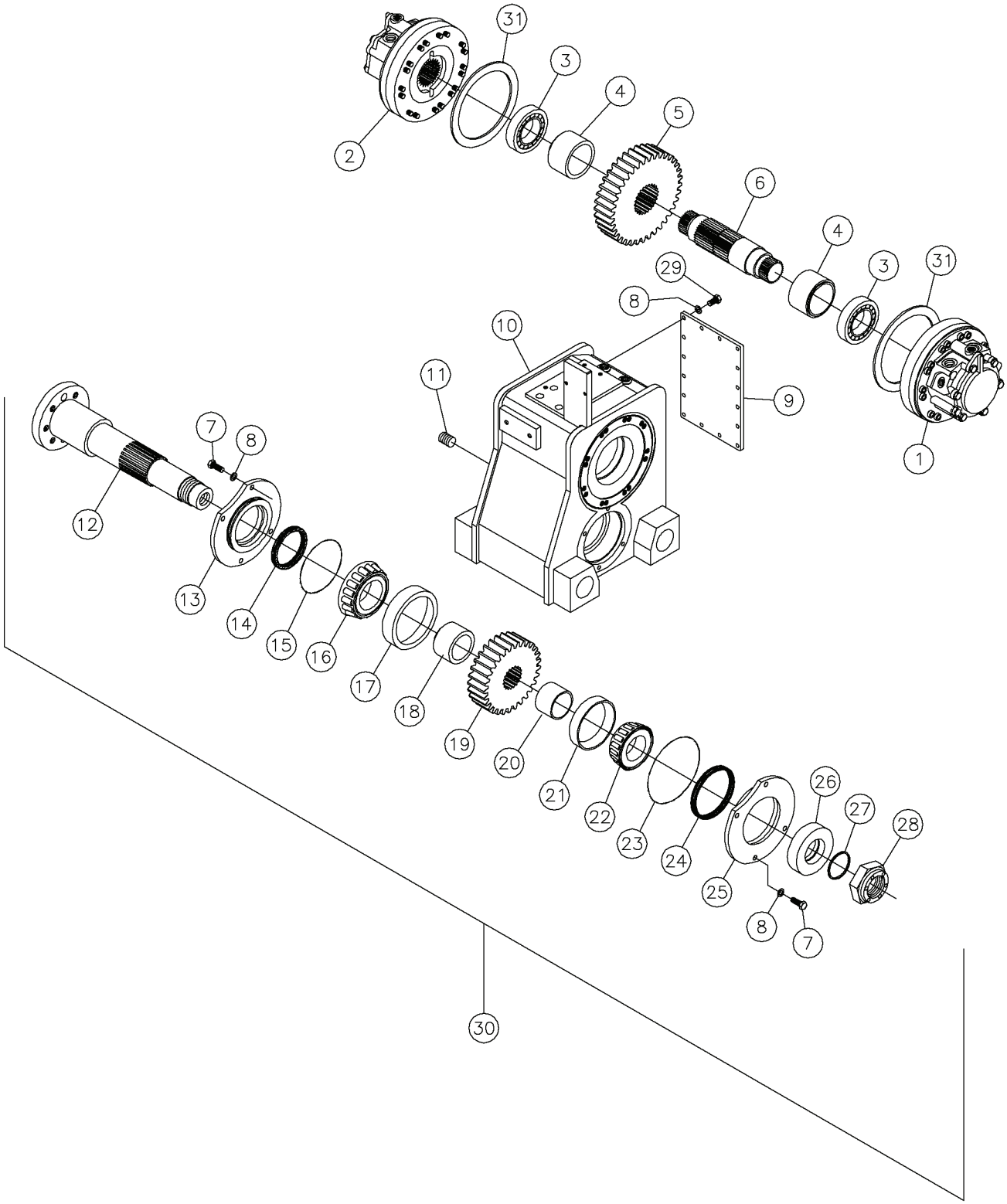

https://truckmanualshub.com/

Rotation Gearbox Components (S/N 563-) Fig 14-1r01

REF. NO.	*	PART NO.	DESCRIPTION	QTY.	REMARKS
		Revision Date	February, 2008		Change Parts And Added Serial Numbers
1	*	296273611	MOTOR - 38.2 CID W/O BRAKE D PREF	1	(BREAKDOWN FIG 14-2) (S/N 563-)
2	*	296273612	MOTOR - 38.2 CID W/O BRAKE G PREF	1	(BREAKDOWN FIG 14-3) (S/N 563-)
3		1706007	BRG.-22215 LB/C3 75MM SPH.ROL.	2	
4	*	296273606	TUBE - GEAR SPACER-MOD	2	(S/N 563-)
5		251224001	GEAR - 37 TOOTH 2.25 FACE	1	
6	*	296273604	SHAFT-TOP MOTOR-MOD	1	(S/N 563-)
7		235727001	BOLT-3/8-16X1 GR8 HEX ZINC PLT	8	
8		235713001	WASHER-3/8 SAE HARD ZINC PLTD	24	
9		220487001	PLATE-LID	1	
10	*	296273605	GEARBOX - ROTATION - MOD	1	(INC REF 17 & 20) (S/N 563-)
11		735003	PIPE PLUG - 1/2 COUNTERSUNK	1	
12		276352001	SHAFT - ROTATION	1	
13		228158001	GLAND-FRONT SEAL	1	
14		235788001	SEAL-3 1/8” HIGH PRESSURE	1	
15		228181001	O-RING -#243 7OD BUNA-N	1	
16		4771061	BRG. CONE 3994	1	
17		1715013	TIMKEN CUP-2 1/2” #3920	1	
18		278761001	TUBE - LOWER GEAR SPACE	1	
19		251223001	GEAR - 29 TOOTH 2.25 FACE	1	
20		278760001	TUBE - LOWER GEAR SPACE	1	
21		1715085	CUP-BEARING	1	
22		1716099	CONE-2 1/8” BRG.	1	
23		228180001	O-RING -#252 7OD BUNA-N	1	
24		235787001	SEAL-4” HIGHT PRESSURE	1	
25		228131001	GLAND-REAR SEAL	1	
26		215350001	SLEEVE-SEAL	1	
27		214202001	O-RING #138	1	
28		278767001	NUT - 50X18-4000# SPEITH-LOCK	1	
29		235726001	BOLT-3/8-16X3/4 GR8 HEX ZNCPLT	16	
30		276362001	GEARBOX ROTATION ASSY	1	(INC ALL ITEMS IN THIS FIGURE)
31	*	296273603	WASHER	2	(S/N 563-)

https://truckmanualshub.com/

Rotation Gearbox Components Fig 14-1

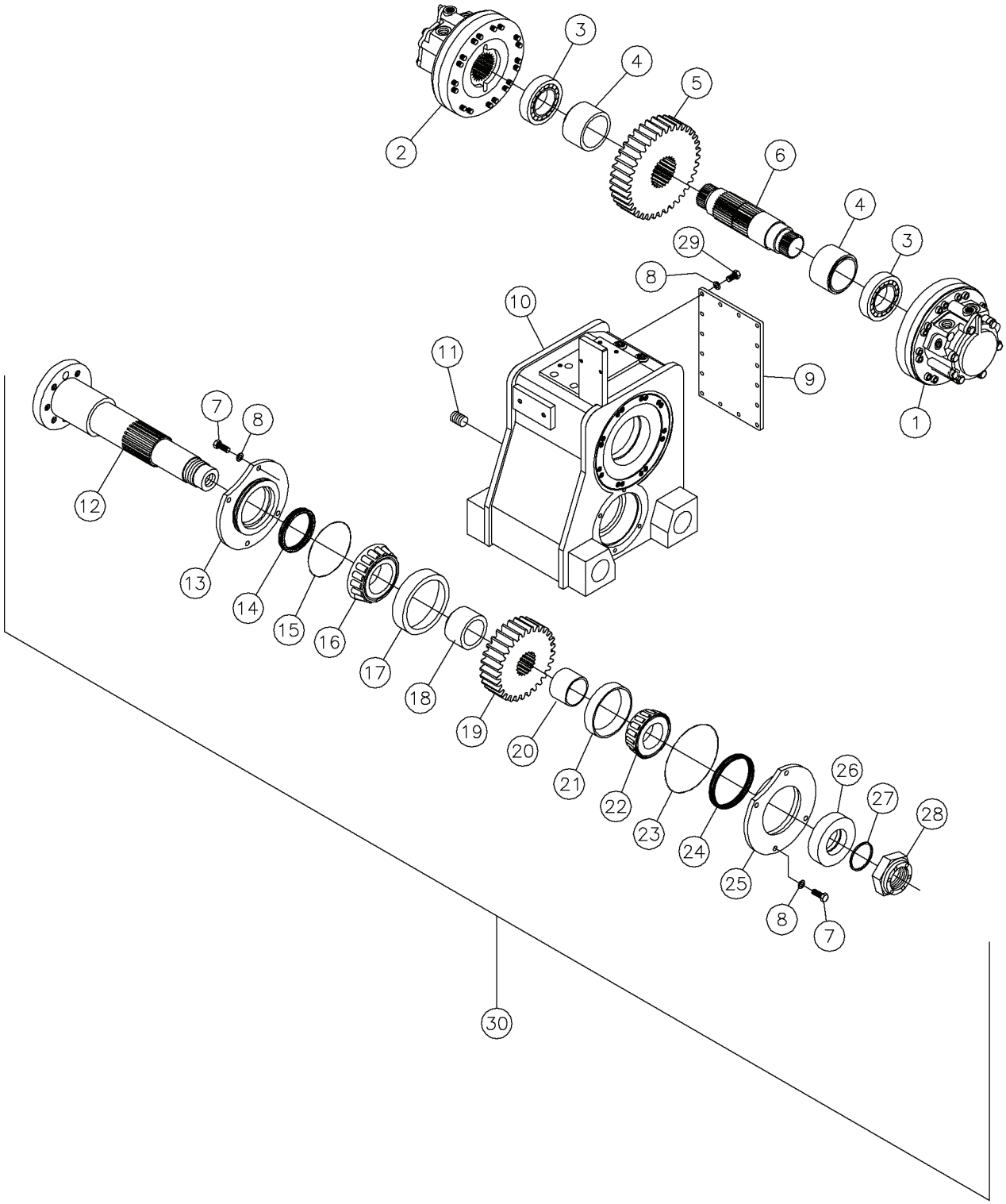

https://truckmanualshub.com/

Rotation Gearbox Components Fig 14-1

REF. NO.	*	PART NO.	DESCRIPTION	QTY.	REMARKS
1		235790001	MOTOR-38.2CID W/O BRAKE D PREF	1	(BREAKDOWN FIG 14-2)
2		235791001	MOTOR-38.2CID W/O BRAKE G PRE	1	(BREAKDOWN FIG 14-3)
3		1706007	BRG.-22215 LB/C3 75MM SPH.ROL.	2	
4		278759001	TUBE - GEAR SPACER	2	
5		251224001	GEAR - 37 TOOTH 2.25 FACE	1	
6		276353001	SHAFT - TOP MOTOR	1	
7		235727001	BOLT-3/8-16X1 GR8 HEX ZINC PLT	8	
8		235713001	WASHER-3/8 SAE HARD ZINC PLTD	24	
9		220487001	PLATE-LID	1	
10		277102003	GEARBOX ASSEMBLY-ROTATION	1	(INC REF 17 & 20)
11		735003	PIPE PLUG - 1/2 COUNTERSUNK	1	
12		276352001	SHAFT - ROTATION	1	
13		228158001	GLAND-FRONT SEAL	1	
14		235788001	SEAL-3 1/8” HIGH PRESSURE	1	
15		228181001	O-RING -#243 7OD BUNA-N	1	
16		4771061	BRG. CONE 3994	1	
17		1715013	TIMKEN CUP-2 1/2” #3920	1	
18		278761001	TUBE - LOWER GEAR SPACE	1	
19		251223001	GEAR - 29 TOOTH 2.25 FACE	1	
20		278760001	TUBE - LOWER GEAR SPACE	1	
21		1715085	CUP-BEARING	1	
22		1716099	CONE-2 1/8” BRG.	1	
23		228180001	O-RING -#252 7OD BUNA-N	1	
24		235787001	SEAL-4” HIGHT PRESSURE	1	
25		228131001	GLAND-REAR SEAL	1	
26		215350001	SLEEVE-SEAL	1	
27		214202001	O-RING #138	1	
28		278767001	NUT - 50X18-4000# SPEITH-LOCK	1	
29		235726001	BOLT-3/8-16X3/4 GR8 HEX ZNCPLT	16	
30		276362001	GEARBOX ROTATION ASSY	1	(INC ALL ITEMS IN THIS FIGURE)

https://truckmanualshub.com/

Hydraulic Motor Components (S/N 563-) Fig 14-2r01

THERE IS THE POSSIBILITY OF HAVING TWO SIZES OF PISTONS IN A MOTOR. NORMALLY CL "0" IS USED. THERE IS NO MARKING ON THE PISTON OR CYLINDER BLOCK. THERE IS THE POSSIBILITY OF HAVING CL "1" WHICH IS 1mm OVER SIZE. THERE WILL BE A "1" STAMPED ON THE PISTON AND A CORRESPONDING "1" STAMPED ON THE CYLINDER BLOCK IN THE AREA OF THE EFFECTED CYLINDER BORE.

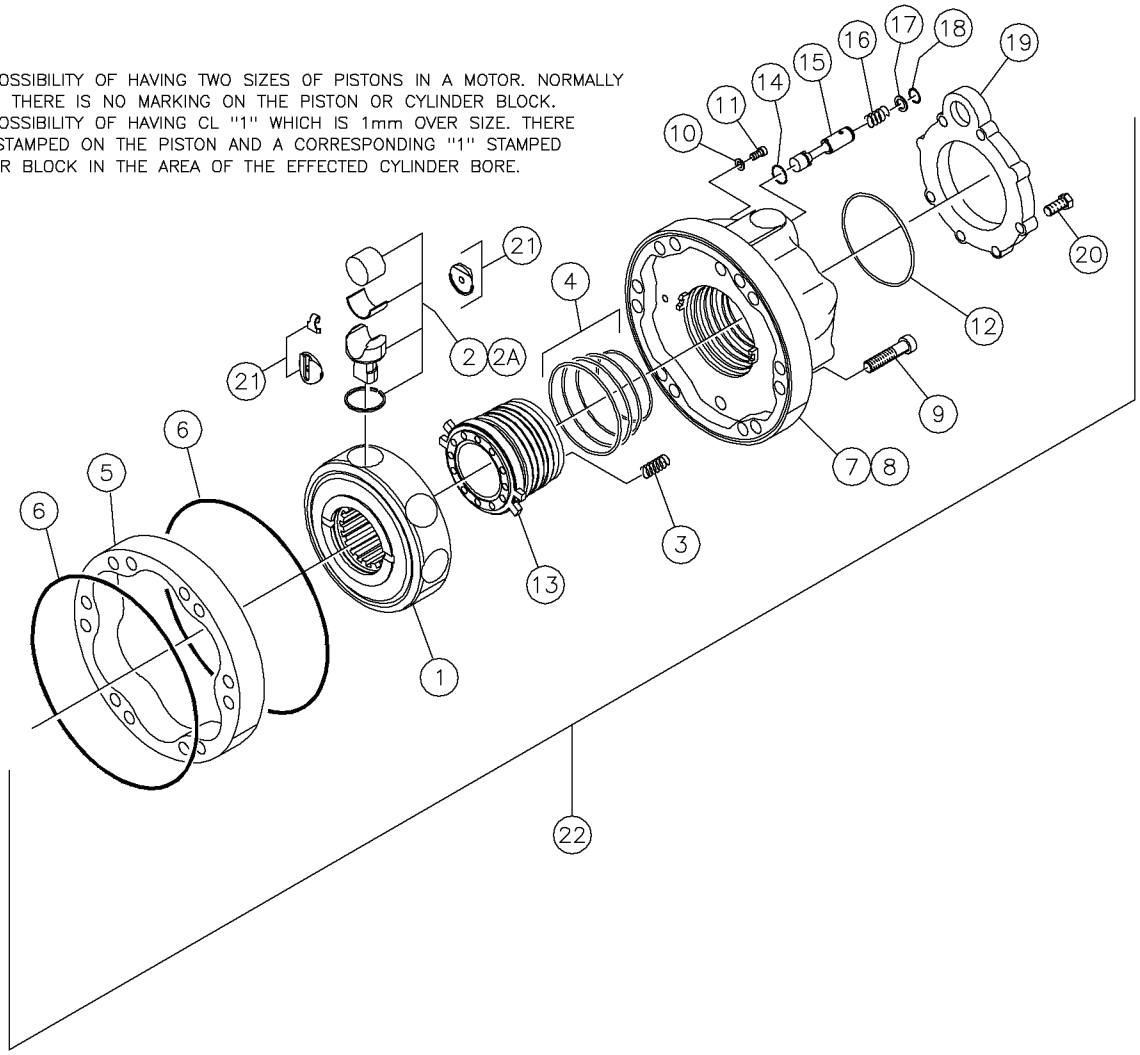

https://truckmanualshub.com/

Hydraulic Motor Components (S/N 563-) Fig 14-2r01

REF. NO.	*	PART NO.	DESCRIPTION	QTY.	REMARKS
		Revision Date	February, 2008		Change Part Numbers And Added Serial Numbers
1	*	296286311	CYLINDER BLOCK	1	(INC REF 2) (S/N 563-)
2		208148001	PISTON CL.1	A/R	
2A		224897005	PISTON CL “0”	A/R	
3		84550029	SPRING	8	
4		208157001	VALVE SEAL RING	1	
5		208151001	CAM RING	1	
6	*	256555021	O-RING	2	
7	*	296278024	VALVING COVER ASSEMBLY	1	(INC REF 3, 4, 8-18)
8		235790005	VALVING COVER	1	
9		235790007	SCREW	16	
10	*	208371001	WASHER	2	
11	*	140255041	SCREW-BLEEDING	2	
12	*	296278067	O-RING-2.62X145.72	1	
13		235790009	VALVING	1	
14		235790011	O-RING	1	
15		235790013	VALVE SPOOL	1	
16	*	84550029	SPRING	1	
17		235790017	WASHER	1	
18		235790019	SNAP RING	1	
19		235790021	BACK PLATE	1	
20		235790023	BOLT	6	
21		224897017	REPAIR KIT-PISTON	1	
22	*	296273611	MOTOR - 38.2 CID W/O BRAKE D PREF	1	(INC ALL ITEMS IN THIS FIGURE) (S/N 563-)

https://truckmanualshub.com/

Hydraulic Motor Components Fig 14-2

THERE IS THE POSSIBILITY OF HAVING TWO SIZES OF PISTONS IN A MOTOR. NORMALLY CL "0" IS USED. THERE IS NO MARKING ON THE PISTON OR CYLINDER BLOCK. THERE IS THE POSSIBILITY OF HAVING CL "1" WHICH IS 1mm OVER SIZE. THERE WILL BE A "1" STAMPED ON THE PISTON AND A CORRESPONDING "1" STAMPED ON THE CYLINDER BLOCK IN THE AREA OF THE EFFECTED CYLINDER BORE.

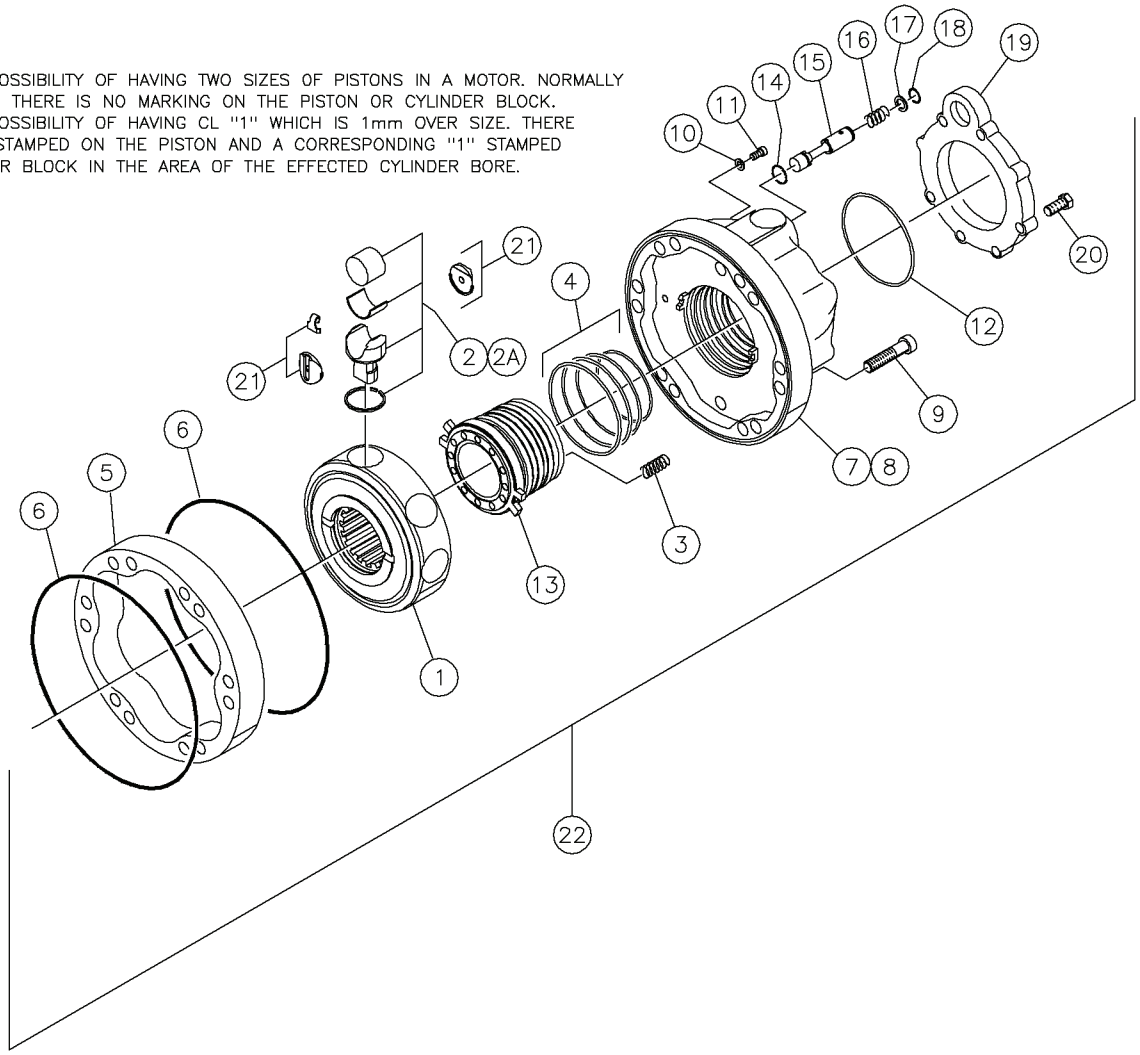

https://truckmanualshub.com/

Hydraulic Motor Components Fig 14-2

REF. NO.	*	PART NO.	DESCRIPTION	QTY.	REMARKS
1		224897003	CYLINDER BLOCK	1	(INC REF 2)
2		208148001	PISTON CL.1	A/R	
2A		224897005	PISTON CL “0”	A/R	
3		84550029	SPRING	8	
4		208157001	VALVE SEAL RING	1	
5		208151001	CAM RING	1	
6		208152001	O-RING	2	
7		235790003	VALVING COVER ASSEMBLY	1	(INC REF 3, 4, 8-18)
8		235790005	VALVING COVER	1	
9		235790007	SCREW	16	
10		64078025	WASHER	2	
11		64078027	SCREW-BLEEDING	2	
12		83651025	O-RING-2.62X145.72	1	
13		235790009	VALVING	1	
14		235790011	O-RING	1	
15		235790013	VALVE SPOOL	1	
16		235790015	SPRING	1	
17		235790017	WASHER	1	
18		235790019	SNAP RING	1	
19		235790021	BACK PLATE	1	
20		235790023	BOLT	6	
21		224897017	REPAIR KIT-PISTON	1	
22		235790001	MOTOR-38.2CID W/O BRAKE D PREF	1	(INC ALL ITEMS IN THIS FIGURE)

https://truckmanualshub.com/

Hydraulic Motor Components (S/N 563-) Fig 14-3r01

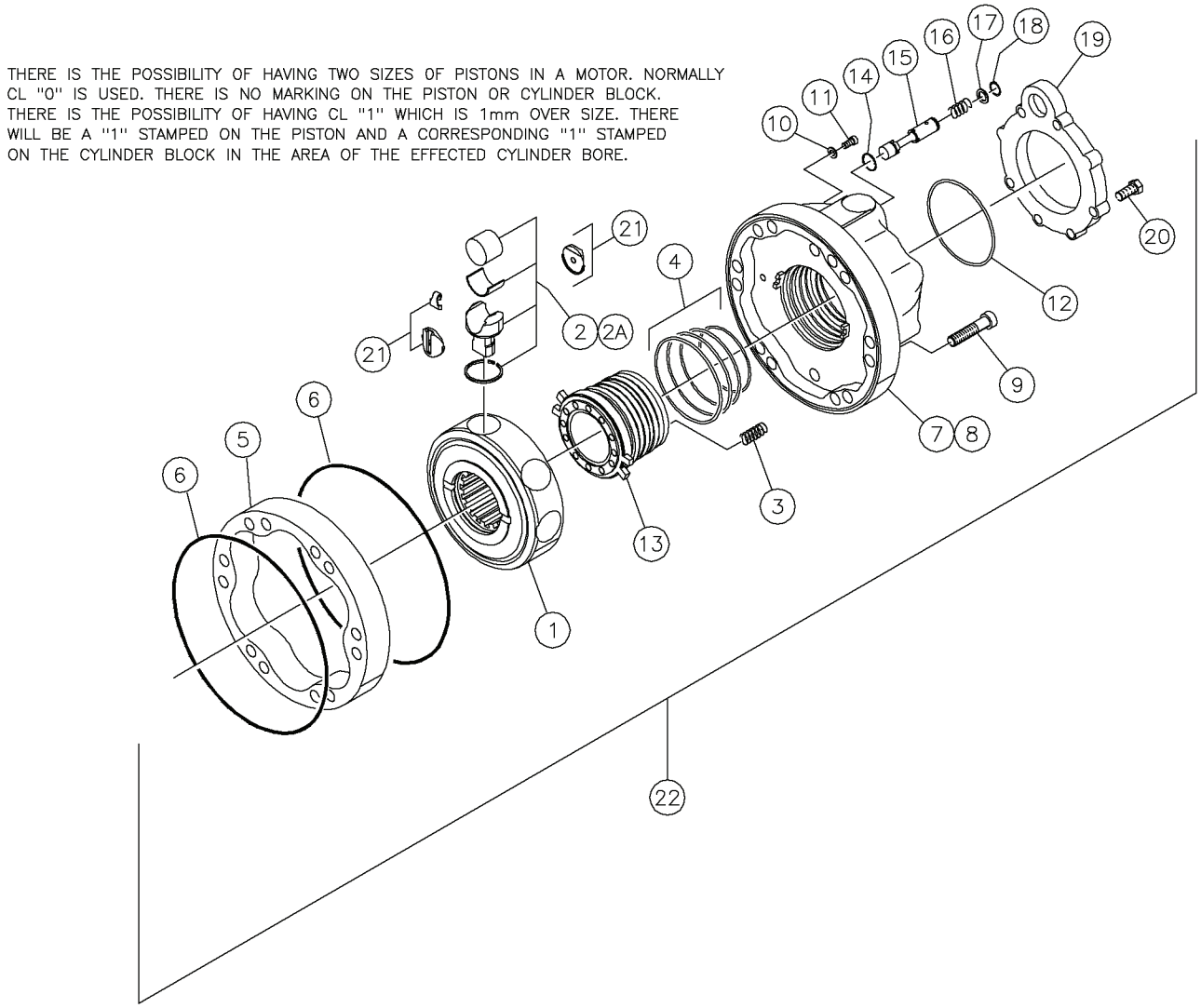

https://truckmanualshub.com/

Hydraulic Motor Components (S/N 563-) Fig 14-3r01

REF. NO.	*	PART NO.	DESCRIPTION	QTY.	REMARKS
		Revision Date	February, 2008		Change Parts Numbers And Added Serial Numbers.
1	*	296286311	CYLINDER BLOCK	1	(INC REF 2) (S/N 563-)
2		208148001	PISTON CL.1	A/R	
2A		224897005	PISTON CL “0”	A/R	
3		84550029	SPRING	8	
4		208157001	VALVE SEAL RING	1	
5		208151001	CAM RING	1	
6	*	256555021	O-RING	2	
7	*	296278024	VALVING COVER ASSEMBLY	1	(INC REF 3, 4, 8-18)
8		235790005	VALVING COVER	1	
9		235790007	SCREW	16	
10	*	208371001	WASHER-11 X 6.6 X 1.6	2	
11	*	1420255041	SCREW-BLEEDING	2	
12	*	296278067	SEAL	1	
13		235790009	VALVING	1	
14		235790011	O-RING	1	
15		235790013	VALVE SPOOL	1	
16		235790015	SPRING	1	
17		235790017	WASHER	1	
18		235790019	SNAP RING	1	
19		235790021	BACK PLATE	1	
20		235790023	BOLT	6	
21		208163001	SHIM	1	
22	*	296273612	MOTOR - 38.2 CID W/O BRAKE G PREF	1	(INC ALL ITEMS IN THIS FIGURE) (S/N 563-)

https://truckmanualshub.com/

Hydraulic Motor Components Fig 14-3

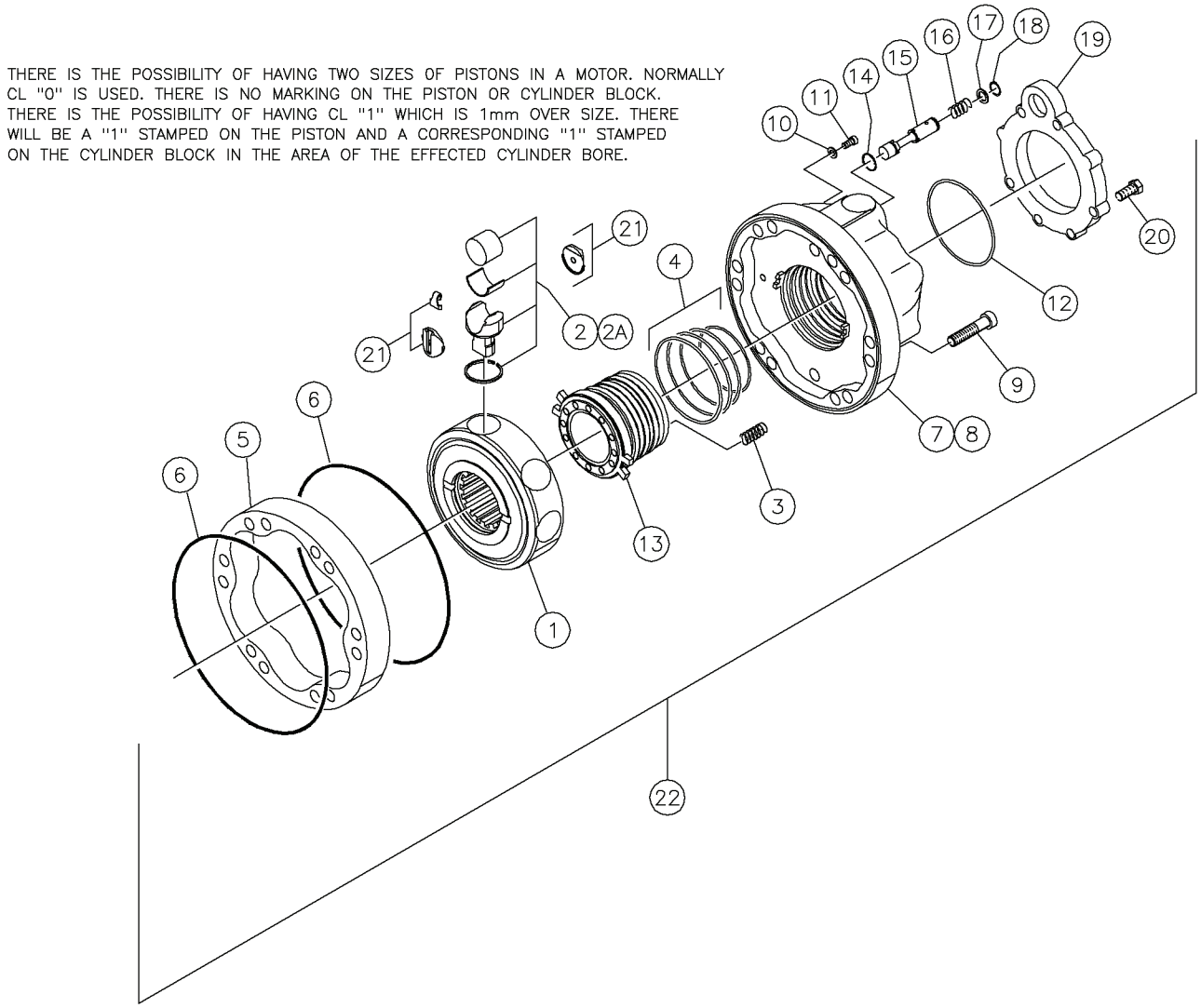

https://truckmanualshub.com/

Hydraulic Motor Components Fig 14-3

REF. NO.	*	PART NO.	DESCRIPTION	QTY.	REMARKS
1		224897003	CYLINDER BLOCK	1	(INC REF 2)
2		208148001	PISTON CL.1	A/R	
2A		224897005	PISTON CL “0”	A/R	
3		84550029	SPRING	8	
4		208157001	VALVE SEAL RING	1	
5		208151001	CAM RING	1	
6		208152001	O-RING	2	
7		235790003	VALVING COVER ASSEMBLY	1	(INC REF 3, 4, 8-18)
8		235790005	VALVING COVER	1	
9		235790007	SCREW	16	
10		64078025	WASHER	2	
11		64078027	SCREW-BLEEDING	2	
12		83651025	O-RING-2.62X145.72	1	
13		235790009	VALVING	1	
14		235790011	O-RING	1	
15		235790013	VALVE SPOOL	1	
16		235790015	SPRING	1	
17		235790017	WASHER	1	
18		235790019	SNAP RING	1	
19		235790021	BACK PLATE	1	
20		235790023	BOLT	6	
21		208163001	SHIM	1	
22		235791001	MOTOR-38.2CID W/O BRAKE G PREF	1	(INC ALL ITEMS IN THIS FIGURE)

https://truckmanualshub.com/

Hydraulic Motor Components Fig 14-4

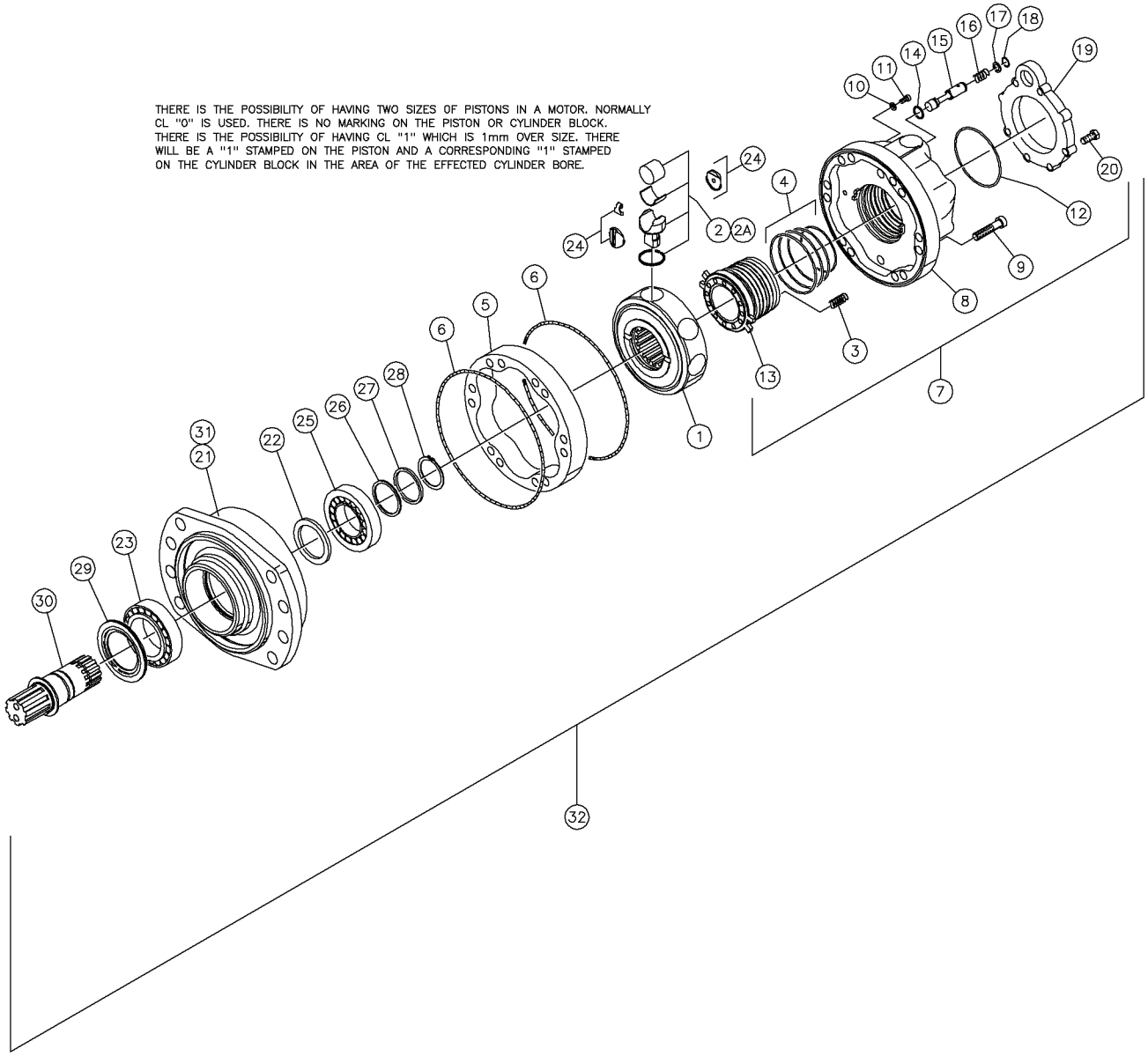

https://truckmanualshub.com/

Hydraulic Motor Components Fig 14-4

REF. NO.	*	PART NO.	DESCRIPTION	QTY.	REMARKS
1		224897003	CYLINDER BLOCK	1	
2		208148001	PISTON CL.1	A/R	
2A		224897005	PISTON CL “0”	A/R	
3		84550029	SPRING	8	
4		208157001	VALVE SEAL RING	1	
5		276258003	CAM RING	1	
6		208152001	O-RING	2	
7		235790003	VALVING COVER ASSEMBLY	1	(INC REF 3, 4, 8-20)
8		235790005	VALVING COVER	1	
9		235790007	SCREW	16	
10		64078025	WASHER	2	
11		64078027	SCREW-BLEEDING	2	
12		83651025	O-RING-2.62X145.72	1	
13		235790009	VALVING	1	
14		235790011	O-RING	1	
15		235790013	VALVE SPOOL	1	
16		235790015	SPRING	1	
17		235790017	WASHER	1	
18		235790019	SNAP RING	1	
19		235790021	BACK PLATE	1	
20		235790023	BOLT	6	
21		276258005	BEARING SUPPORT	1	
22		208160001	INNER SHAFT SEAL	1	
23		905439009	OUTER BEARING	1	
24		224897017	REPAIR KIT-PISTON	1	
25		208162001	INNER BEARING	1	
26		208163001	SHIM	1	
27		208164001	WASHER	1	
28		224897015	SNAP RING	1	
29		276258007	ENVIRONMENTAL SEAL	1	
30		276258009	SHAFT	1	
31		276258011	BEARING SUPPORT ASSEMBLY	1	(INC REF 21-23, 25-30)
32		276258001	MOTOR-57.5 CI/REV MS08 D PREF	1	(INC ALL ITEMS IN THIS FIGURE)

https://truckmanualshub.com/

Hydraulic Motor Components Fig 14-5

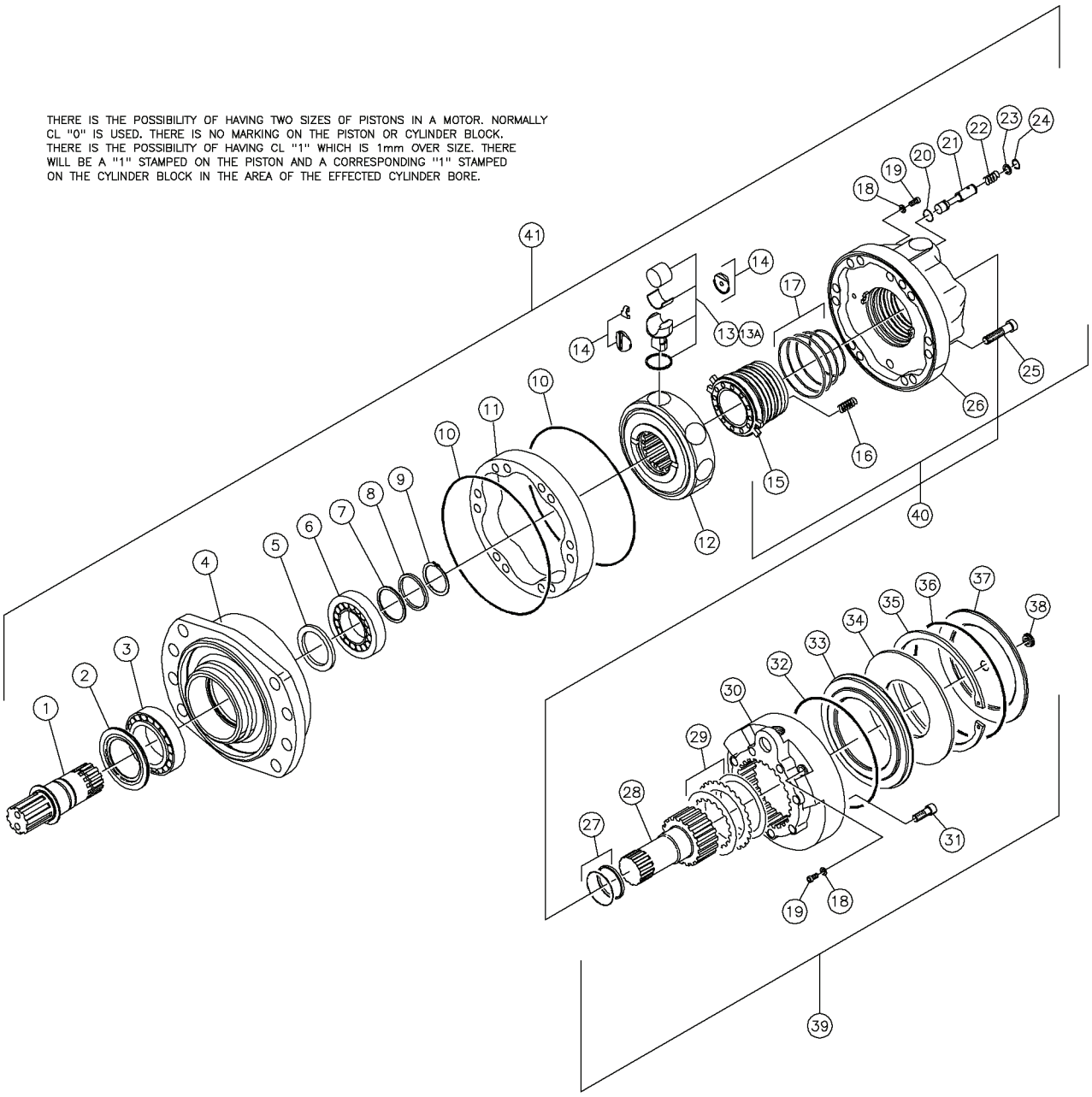

https://truckmanualshub.com/

Hydraulic Motor Components Fig 14-5

REF. NO.	*	PART NO.	DESCRIPTION	QTY.	REMARKS
1		276258009	SHAFT	1	
2		276258007	ENVIRONMENTAL SEAL	1	
3		905439009	OUTER BEARING	1	
4		276258005	BEARING SUPPORT	1	
5		208160001	INNER SHAFT SEAL	1	
6		208162001	INNER BEARING	1	
7		208163001	SHIM	1	
8		208164001	WASHER	1	
9		224897015	SNAP RING	1	
10		208152001	O-RING	2	
11		276258003	CAM RING	1	
12		224897003	CYLINDER BLOCK	1	(INC REF 13 & 14)
13		208148001	PISTON CL.1	A/R	
13A		224897005	PISTON CL “0”	A/R	
14		224897017	REPAIR KIT-PISTON	1	
15		235790009	VALVING	1	
16		84550029	SPRING	8	
17		208157001	VALVE SEAL RING	1	
18		64078025	WASHER	4	
19		64078027	SCREW-BLEEDING	4	
20		235790011	O-RING	1	
21		235790013	VALVE SPOOL	1	
22		235790015	SPRING	1	
23		235790017	WASHER	1	
24		235790019	SNAP RING	1	
25		235790007	SCREW	16	
26		235790005	VALVING COVER	1	
27		278973019	SEAL	1	
28		278973017	SHAFT	1	
29		278973021	BRAKE DISC KIT	1	
30		278973005	BRAKE BODY	1	
31		278973007	SCREW	8	
32		278973009	O-RING	1	
33		278973011	BRAKE PISTON	1	
34		278973013	SPRING WASHER	1	
35		278973015	SNAP RING	1	
36		278973025	O-RING	1	
37		278973027	PROTECTOR	1	
38		278973023	PLUG	1	
39		278973003	DISC BRAKE	1	(INC REF 27-38)
40		235790003	VALVING COVER ASSEMBLY	1	(INC REF 15-26)
41		278973001	MOTOR - 57.5 CID MSO8 G W/ BRAKE	1	(INC ALL ITEMS IN THIS FIGURE)

https://truckmanualshub.com/

Hydraulic Motor Components Fig 14-6

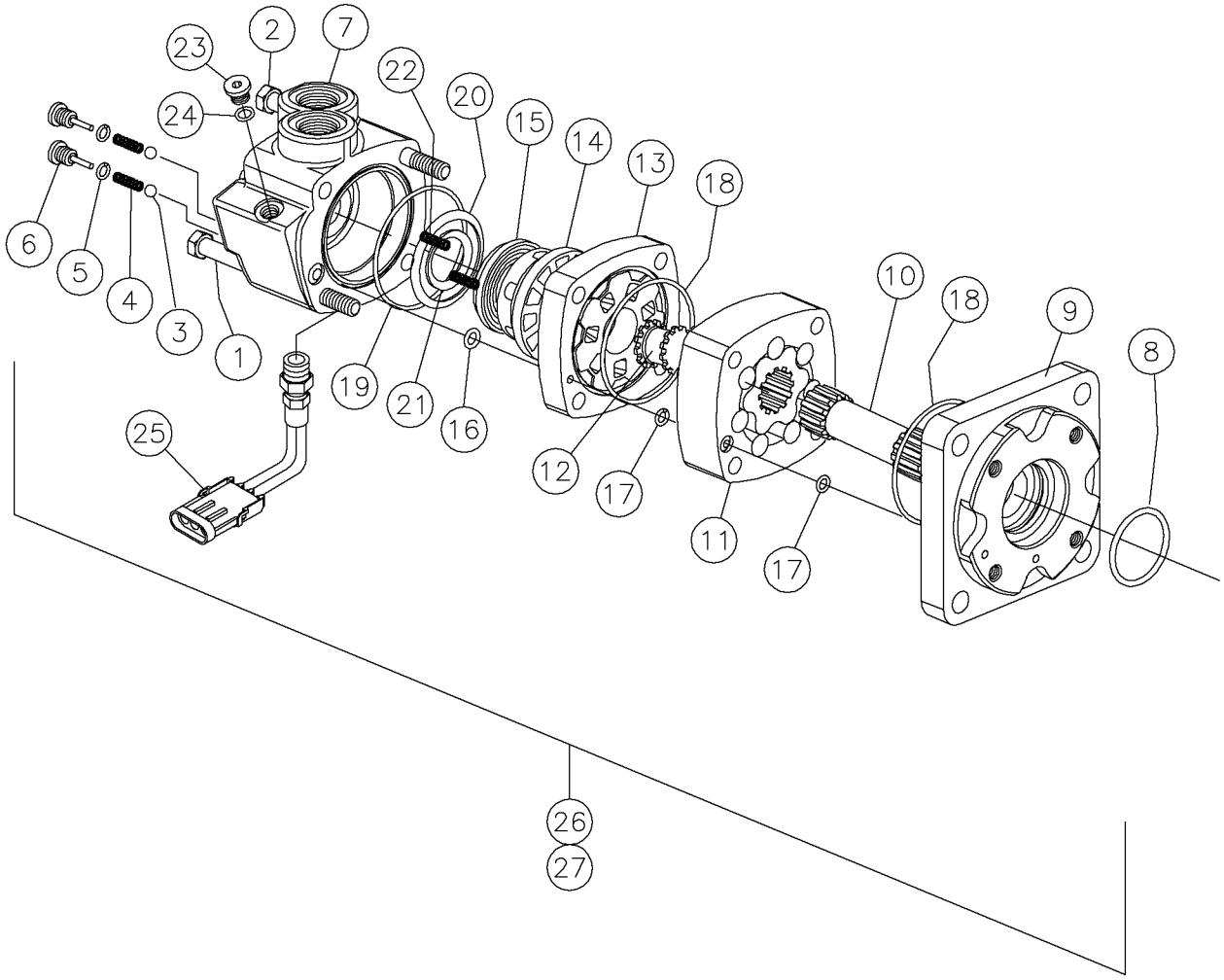

https://truckmanualshub.com/

Hydraulic Motor Components Fig 14-6

REF. NO.	*	PART NO.	DESCRIPTION	QTY.	REMARKS
1		13514027	BOLT-14386-007	3	
2		13514025	BOLT-14386-009	1	
3		224408035	BALL	2	
4		224408037	SPRING	2	
5		4485011	O-RING-250003-903 (90D)	2	
6		224408039	PLUG/O-RING S/A	2	
7		251106007	HOUSING - VALVE	1	
8		215338003	SEAL	1	
9		251106003	FLANGE - MOUNTING	1	
10		217192005	DRIVE	1	
11			GEROLER	1	NSS
12		600076019	VALVE	1	
13		600076017	PLATE - VALVE	1	
14		600076021	VALVE	1	
15		53853017	BALANCE RING&PINS 21316CHARLYN	1	
16		4485011	O-RING-250003-903 (90D)	2	
17		215338009	SEAL	2	
18		13514033	SEAL-3 1/2 ID	2	
19		775049	SEAL-9022-7	1	
20		775041	SEAL-OUTER FACE 6962	1	
21		775043	SEAL-FACE INNER 6961	1	
22		224408017	SPRING	2	
23		120872025	HEX PLUG	1	
24		1749025	SEAL-O RING 15007 (90D)	1	
25		251106009	SPEED PICKUP - ELECTRONIC	1	
26		251106005	SEAL KIT	1	(INC REF 5, 16, 17, 19-21, 24)
27		251106001	MOTOR -12.5 CID 4000 SERIES HY	1	(INC ALL ITEMS IN THIS FIGURE)

https://truckmanualshub.com/

Hydraulic Motor Components Fig 14-7

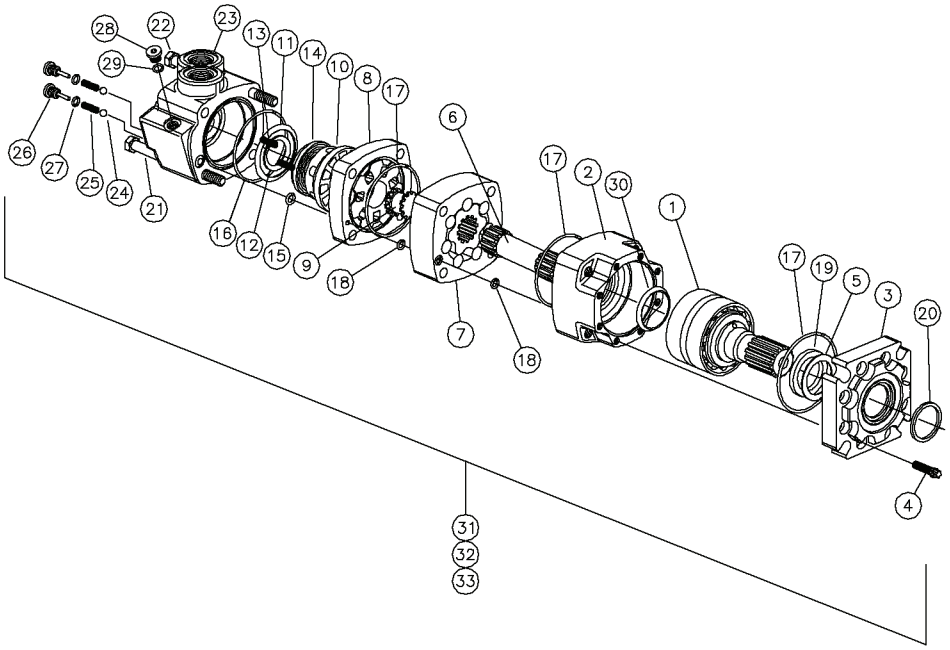

Hydraulic Motor Components Fig 14-7

REF. NO.	*	PART NO.	DESCRIPTION	QTY.	REMARKS
1		251105003	SHAFT - AND BEARING KIT	1	(1.25 SPLINE-14T)
2		13514011	HOUSING-BEARING 8487	1	
3		13514009	SHAFT & BEARING KIT 8709-1	1	
4		57982013	SCREW	8	
5		775011	WASHER-BACKUP 6943	1	
6		251105005	DRIVE - MAIN	1	
7			GEROLER	1	NSS
8		600076017	PLATE - VALVE	1	
9		600076019	VALVE	1	
10		600076021	VALVE	1	
11		775041	SEAL-OUTER FACE 6962	1	
12		775043	SEAL-FACE INNER 6961	1	
13		224408017	SPRING	2	
14		53853017	BALANCE RING&PINS 21316CHARLYN	1	
15		4485011	O-RING-250003-903 (90D)	2	
16		775049	SEAL-9022-7	1	
17		13514033	SEAL-3 1/2 ID	3	
18		215338009	SEAL	2	
19		53853005	SEAL-SHAFT 9057-12 CHAR-LYNN	1	
20		53853003	SEAL-DUST 9031-1 CHAR-LYNN	1	
21		251105007	SCREW - CAP	3	
22		251109009	SCREW-CAP	1	
23		57982023	VALVE-HOUSING ASSY	1	
24		224408035	BALL	2	
25		224408037	SPRING	2	
26		224408039	PLUG/O-RING S/A	2	
27		4485011	O-RING-250003-903 (90D)	2	
28		120872025	HEX PLUG	1	
29		1749025	SEAL-O RING 15007 (90D)	1	
30		600076033	SEAL - SHAFT FACE	1	
31		53853027	REPAIR KIT-MOTOR 61234 CHARLYN	1	(INC REF 11, 12, 15, 16, 18, 27, 29)
32		53853025	REPAIR KIT-SHAFT 61236 CHARLYN	1	(INC REF 5, 17, 19, 20, 28)
33		251105001	MOTOR-7.9 CID 4000 SERIES HYD.	1	(INC ALL ITEMS IN FIGURE)

https://truckmanualshub.com/

Hydraulic Motor Components Fig 14-8

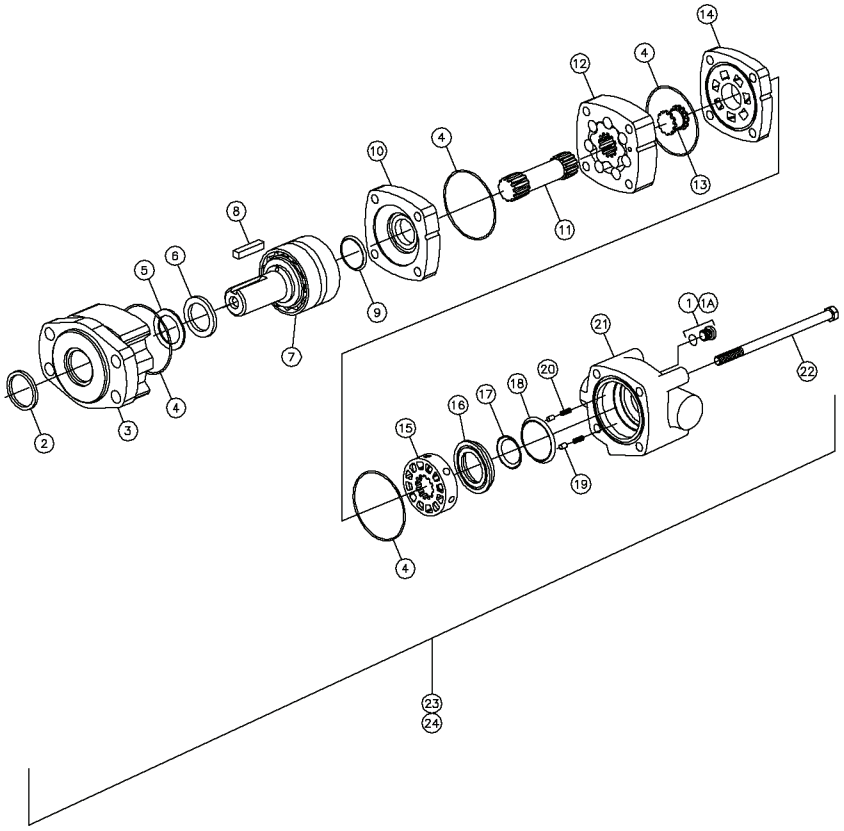

https://truckmanualshub.com/

Hydraulic Motor Components Fig 14-8

REF. NO.	*	PART NO.	DESCRIPTION	QTY.	REMARKS
1		4485021	PLUG ASSY-9072-3	1	
1A		4485023	O-RING-250003-904	1	
2		770071	SEAL-DUST # 9121-1	1	
3		246413003	HOUSING - 4 BOLT MAGNET0	1	
4		770007	SEAL-O RING 9022-6	4	
5		770009	WASHER-BACKUP 7382	1	
6		770075	SEAL-SHAFT # 9057-9	1	
7		770099	SHAFT&BEARING KIT- #21618-2	1	(INC REF 7A-7E)
7A			SHAFT-OUTPUT	1	NSS
7B			CONE-BEARING	2	NSS
7C			CUP-BEARING	2	NSS
7D			SPACER-BEARING	1	NSS
7E			RING-RETAINING	1	NSS
8		772003	KEY-5/16X5/16X1 1/4 14352	1	
9		770017	SEAL-SHAFT FACE 9050	1	
10		770079	PLATE-WEAR # 21623	1	
11		70020003	DRIVE- # 21371-7	1	
12			GEROLER ASSEMBLY	1	NSS
13		774011	DRIVE-VALVE 8433	1	
14		770085	PLATE-VALVE # 21622	1	
15		770087	VALVE- # 21466	1	
16		770089	PLATE-BALANCE #8915	1	
17		770057	SEAL-FACE INNER 9049-1	1	
18		770091	SEAL-FACE OUTER #9135-2	1	
19		770037	PIN-14351	2	
20		770039	SPRING-7383	2	
21		246413005	HOUSING-VALVE(#10ENDPTS,#4CASE	1	
22		70020007	BOLT- #14384-012	4	
23		770097	REPAIR KIT- #61258	1	(INC REF 2, 4-6, 9, 17, 18)
24		246413001	MOTOR- HYD 2000	1	(INC ALL ITEMS IN THIS FIGURE)

https://truckmanualshub.com/

Hydraulic Motor Components Fig 14-9

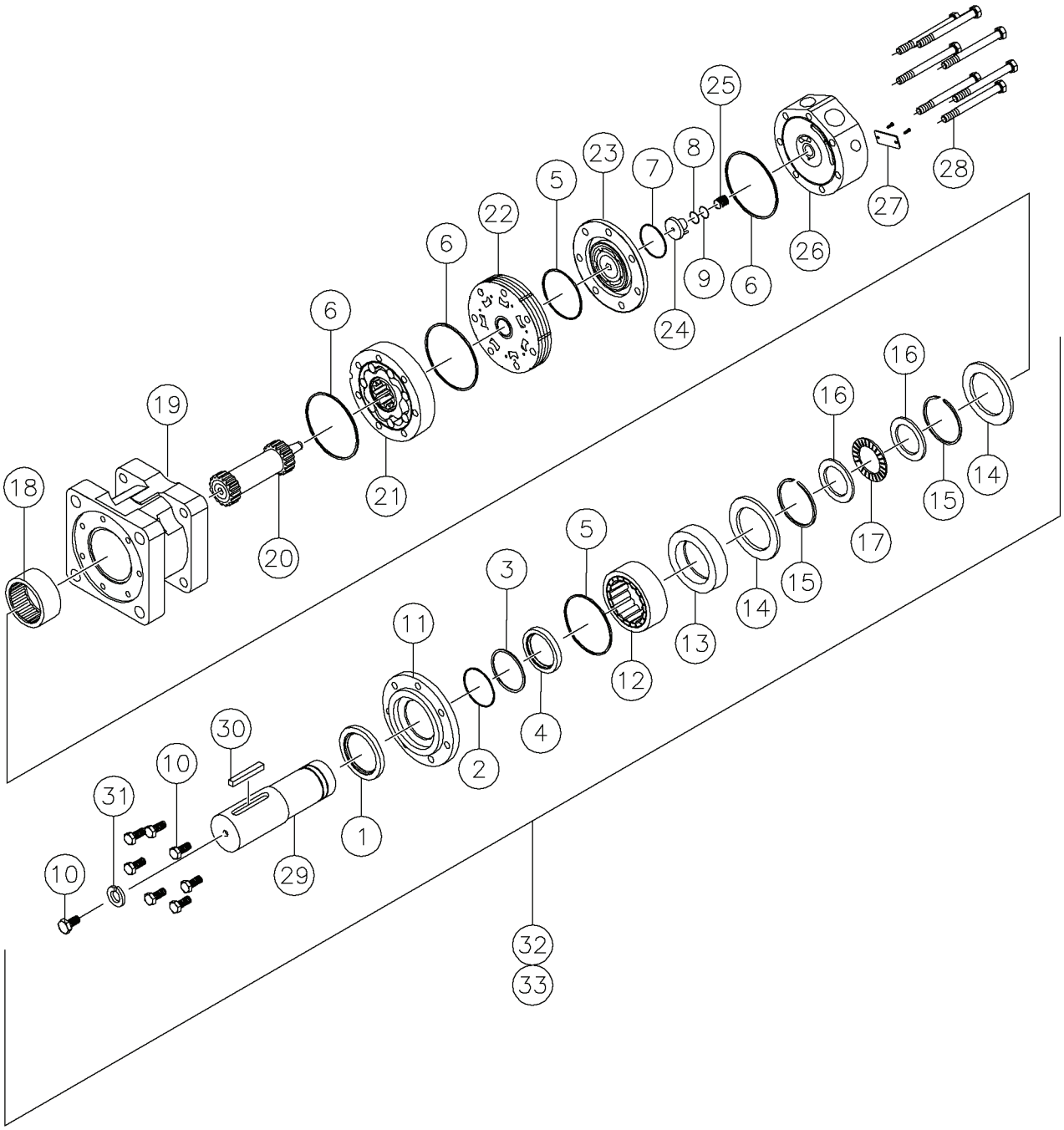

https://truckmanualshub.com/

Hydraulic Motor Components Fig 14-9

REF. NO.	*	PART NO.	DESCRIPTION	QTY.	REMARKS
1			SEAL-DUST	1	NSS
2			SHIM-METAL BACKUP	1	NSS
3			SEAL-TEFLON BACKUP	1	NSS
4			SEAL-SHAFT	1	NSS
5			SEAL-LATHE CUT	2	NSS
6			SEAL-BODY	3	NSS
7			SEAL-COMMUTATOR	1	NSS
8			SEAL O-RING	1	NSS
9			SEAL-TEFLON BACKUP	1	NSS
10		383010	BOLT-1/2-20X1 GR.8 HEX HEAD	8	
11		236219007	RING-PILOT	1	
12		236219009	BEARING-2 1/2” ROLLER	1	
13		236219011	SPACER-BEARING	1	
14		236219013	WASHER-RETAINING	2	
15		236219015	SNAP RING	2	
16		236219017	WASHER-THRUST	2	
17		236219019	BEARING-THRUST	1	
18		236219021	BEARING-REAR HOUSING	1	
19		236219023	HOUSING	1	
20		236219025	DRIVE LINK	1	
21		236219027	ROTOR ASSEMBLY	1	
22		236219029	MANIFOLD	1	
23		236219031	COMMUTATOR ASSEMBLY	1	
24		236219033	PISTON-ENDCOVER	1	
25		236219035	SPRING-PISTON	1	
26		236219037	ENDCOVER	1	(INC REF 8, 9, 24, 25)
27			I.D. TAG ASSEMBLY	1	NSS
28		236219039	BOLT	7	
29		236219041	SHAFT-ASSEMBLY	1	(INC REF 1-5, 10-17, 29-31)
30		236219005	KEY-SHAFT	1	
31		480011	WASHER-1/2 S/T LOCK	1	
32		236219003	SEAL KIT-HYD. MOTOR	1	(INC REF 1-9)
33		236219001	HYD MOTOR-66CI	1	(INC ALL ITEMS IN THIS FIGURE)

https://truckmanualshub.com/

Planetary Gearbox Components Fig 14-10

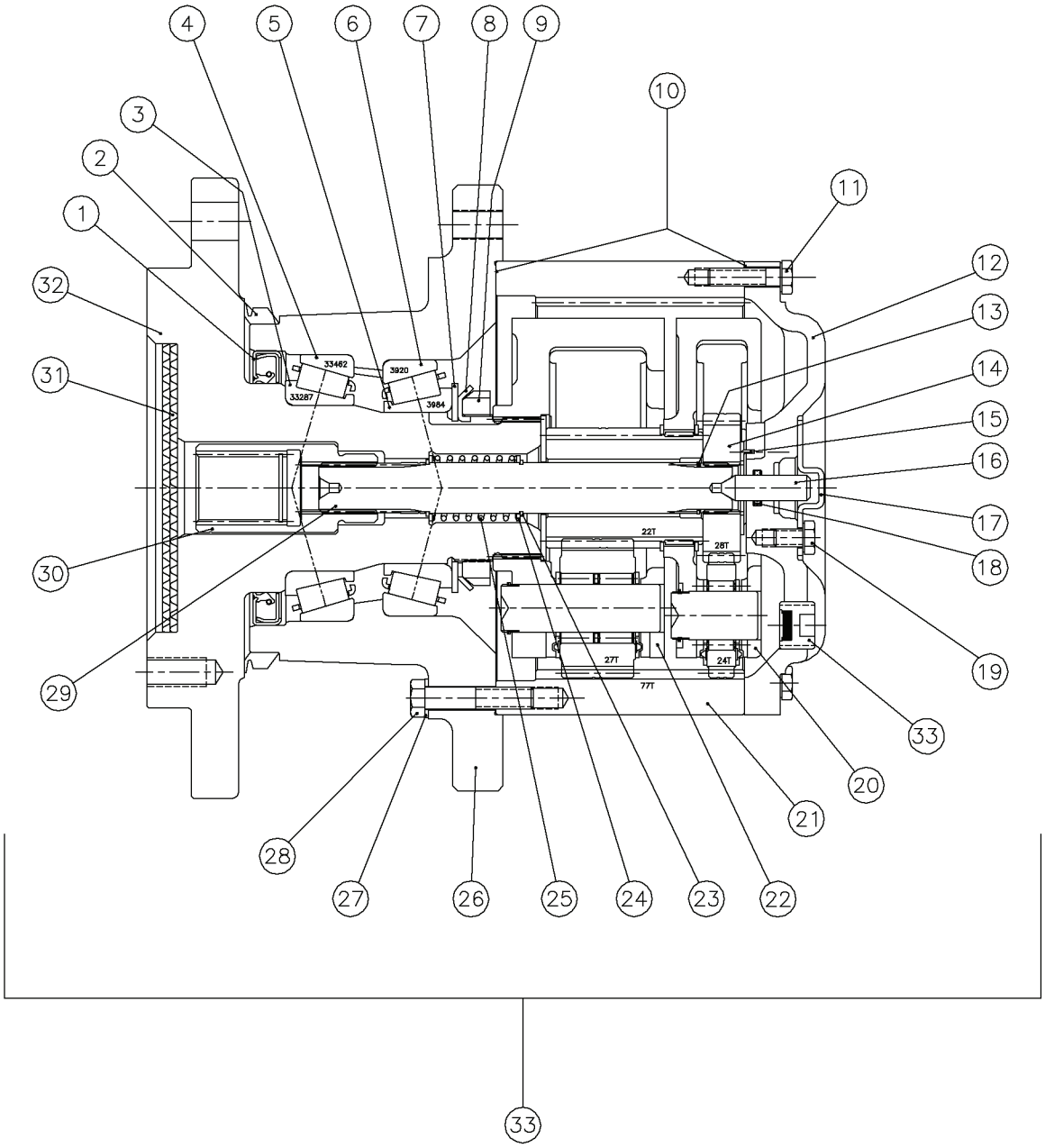

https://truckmanualshub.com/

Planetary Gearbox Components Fig 14-10

REF. NO.	*	PART NO.	DESCRIPTION	QTY.	REMARKS
1		244405057	SEAL - OIL	1	
2		244405055	SEAL - V RING	1	
3		244405053	BEARING - CONE	1	
4		244405051	BEARING - CUP	1	
5		244405049	BEARING - CONE	1	
6		244405047	BEARING - CUP	1	
7		244405045	WASHER - THRUST	1	
8		244405043	WASHER - LOCK	1	
9		244405041	NUT - LOCK	1	
10		244405039	COMPOUND - SEALING	2	
11		221652037	BOLT	8	
12		244405037	COVER	1	
13		244405035	RING - RETAINING	1	
14		244405033	GEAR - PRI SUN	1	
15		244405031	WASHER - THRUST	1	
16		244405029	PLUNGER	1	
17		244405027	COVER - DISENGAGE	1	
18		244405025	O-RING	1	
19		244405023	BOLT - HEX HEAD	2	
20		244405021	ASSEMBLY - PRI CARRIER	1	
21		244405019	GEAR - RING	1	
22		244405017	ASSEMBLY - SEC CARRIER	1	
23		244405015	RING - RETAINING	2	
24		244405013	WASHER - THRUST	2	
25		244405011	SPRING - DISENGAGE	1	
26		244405009	HUB	1	
27		221652013	WASHER	18	
28		221652011	BOLT	18	
29		244405007	SHAFT - IMPUT	1	
30		244405005	COUPLING	1	
31		244405003	SPINDLE	1	
32		221652035	MAGNETIC PLUG	1	
33		244405001	GEARBOX - PLANETARY 7WC14150ZX	1	(INC ALL ITEMS IN THIS FIGURE)

https://truckmanualshub.com/

Park Brake Components Fig 14-11

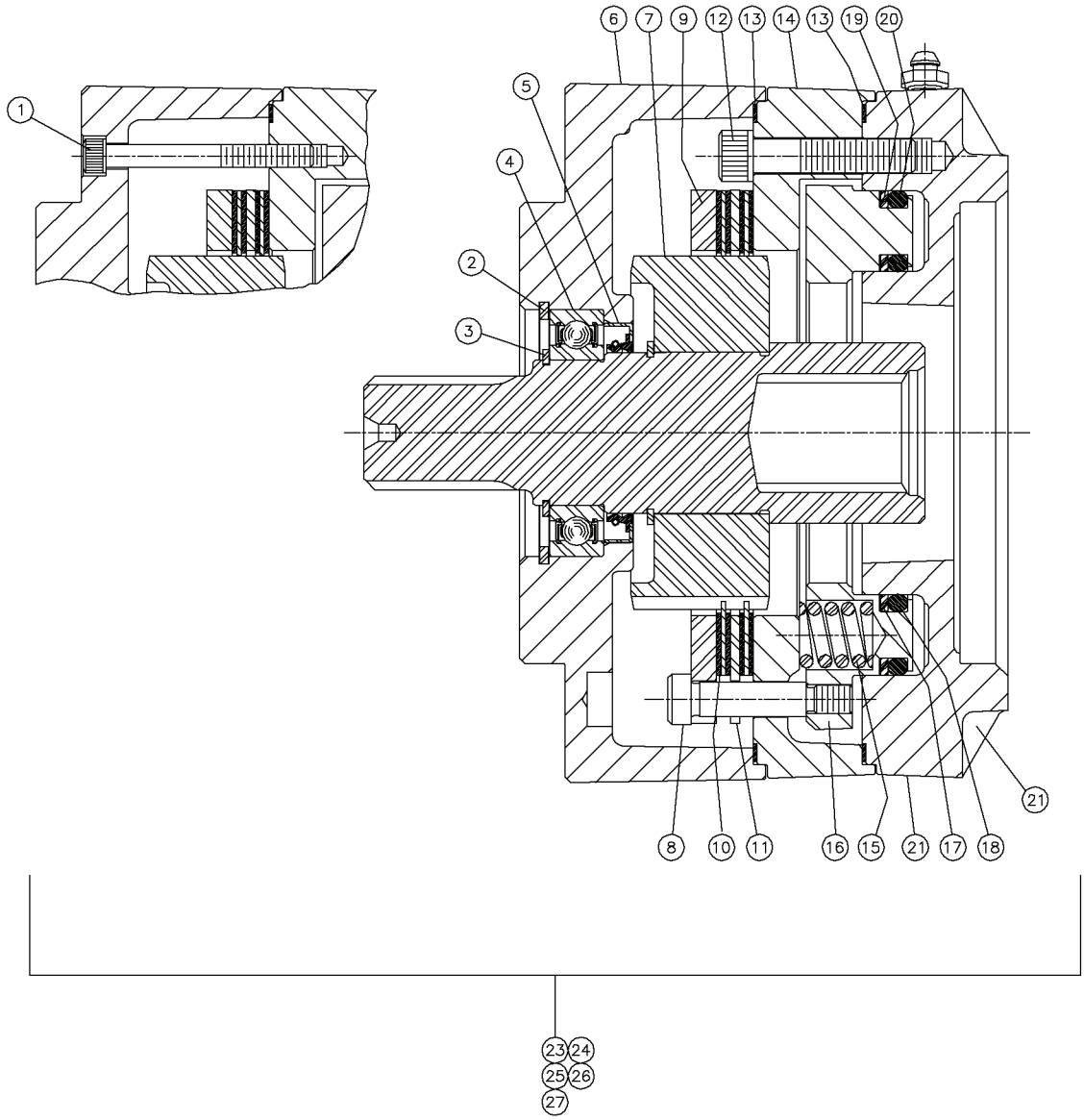

https://truckmanualshub.com/

Park Brake Components Fig 14-11

REF. NO.	*	PART NO.	DESCRIPTION	QTY.	REMARKS
1			BOLT-SOCKET HEAD	2	NSS
2			RING-RETAINING	1	NSS
3			RING-RETAINING	1	NSS
4			BEARING	1	NSS
5			SEAL-OIL	1	NSS
6			COVER	1	NSS
7			SPLINE SHAFT ASSY	4	NSS
8			BOLT-SOCKET HEAD SHOULDER	4	NSS
9			DISC-PRIMARY	1	NSS
10			DISC-ROTOR	5	NSS
11			DISC-STATOR	4	NSS
12			SCREW-SOCKET HEAD CAP	4	NSS
13			GASKET	2	NSS
14			PLATE-SPRING	1	NSS
15			SPRING	8	NSS
16			PISTON	1	NSS
17			BACK-UP RING	1	NSS
18			O-RING	1	NSS
19			BACK-UP RING	1	NSS
20			O-RING	1	NSS
21			PLATE-PRESSURE	1	NSS
22			PIN-DOWEL	2	NSS (NOT SHOWN)
23		278785003	O-RING & BACK UP RING KIT	1	(INC REF 5, 13, 17-20 & LOCTITE)
24		278785005	STANDARD TORQUE LINING KIT	1	(INC REF 4, 5, 13 & LOCTITE)
25		278785007	BEARING KIT	1	(INC REF 13, 15 & LOCTITE)
26		278785009	SPRING KIT	1	(INC REF 9-11, 13 & LOCTITE)
27		278785001	BRAKE-TRACK DRIVE PARK	1	(INC ALL ITEMS IN THIS FIGURE)

https://truckmanualshub.com/

Hydraulic Pump Components Fig 14-12

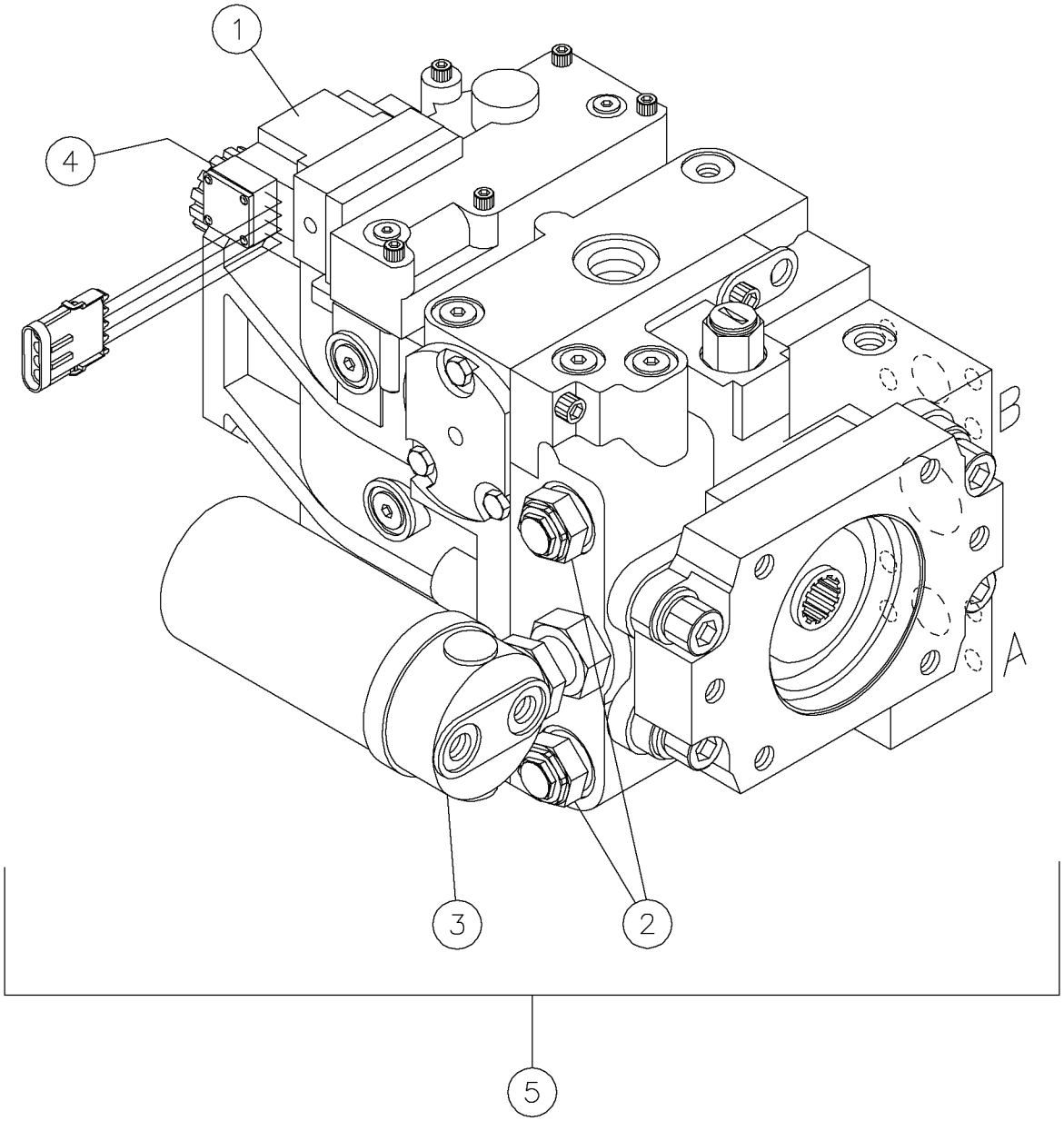

https://truckmanualshub.com/

Hydraulic Pump Components Fig 14-12

REF. NO.	*	PART NO.	DESCRIPTION	QTY.	REMARKS
1		278884003	EDC KIT W/ 4-WAY PACKARD CONNECTOR	1	(INC GASKET & MOUNTING BOLTS)
1A		224413005	GASKET-CONTROL	1	
1B		278884005	PRESSURE CONTROL PILOT VALVE	1	
2		85642007	VALVE-MULTI-FUNCTION	2	(SPECIFY PRESSURE SETTING)
2A		85642009	O-RING	1	(OUTER)
2B		85642011	O-RING	1	(INNER)
3		85642051	FILTRATION-INTEGRAL SHT FILTER	1	
3A		81902001	FILTER-OIL	1	
4		98688009	LIP SEAL	1	
4A		98688011	SEAL-CARRIER	1	
4B		98688013	O-RING	1	
5		278884001	PUMP - HYD 90 SERIES 55CC	1	(INC ALL ITEMS IN THIS FIGURE)

https://truckmanualshub.com/

Hydraulic Pump Components Fig 14-13

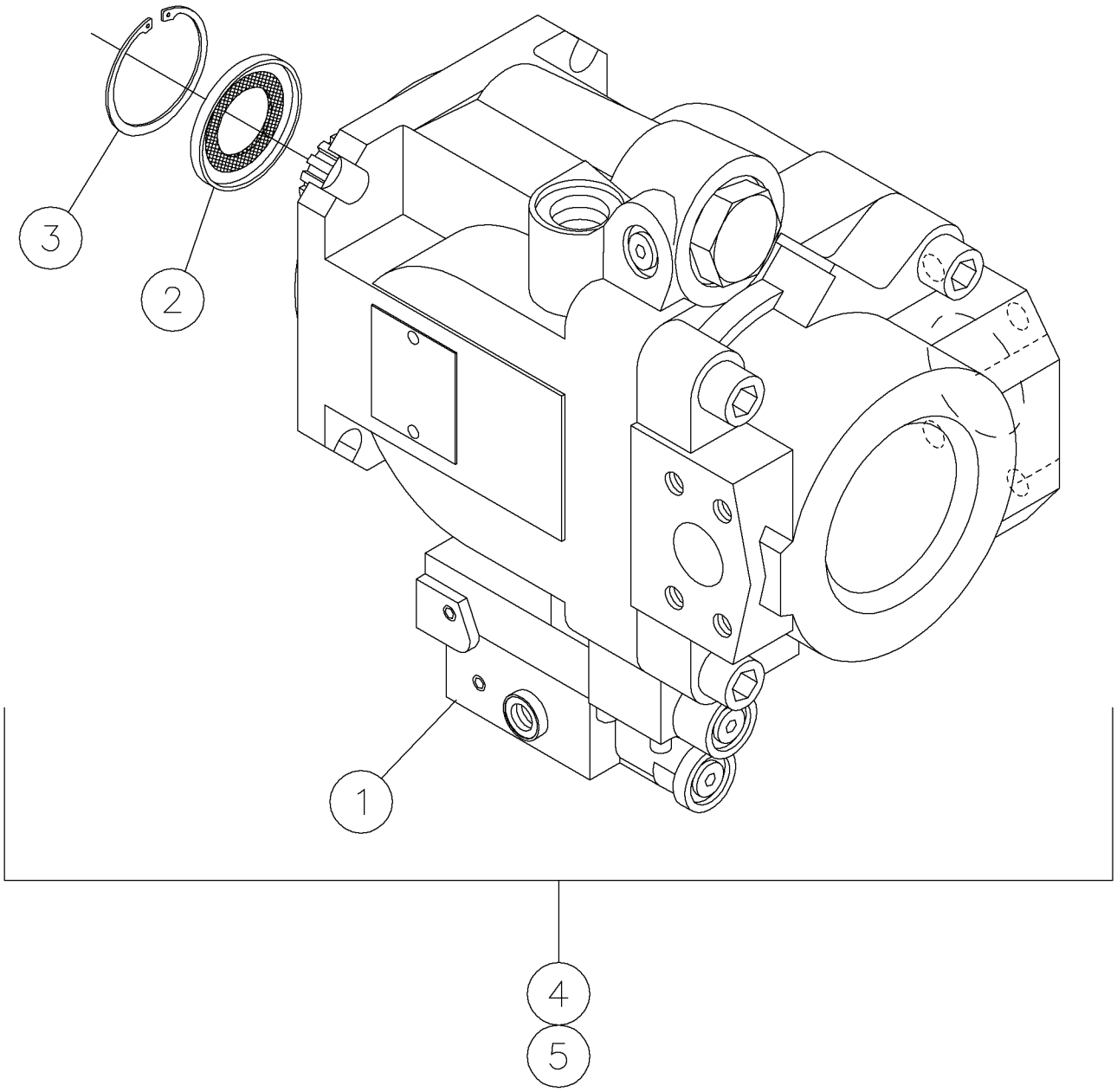

https://truckmanualshub.com/

Hydraulic Pump Components Fig 14-13

REF. NO.	*	PART NO.	DESCRIPTION	QTY.	REMARKS
1		278885003	CONTROLLER KIT	1	(COMPLETE) (INC O-RINGS)
1A		278885005	O-RING	4	
2		278885007	LIP SEAL	1	
3		278885009	RETAINING RING	1	
4		278885011	SEAL KIT - OVERHAUL	1	
5		278885001	PUMP - HYDRAULIC 45 SERIES 74CC	1	(COMPLETE)

https://truckmanualshub.com/

Water Pump Components Fig 14-14

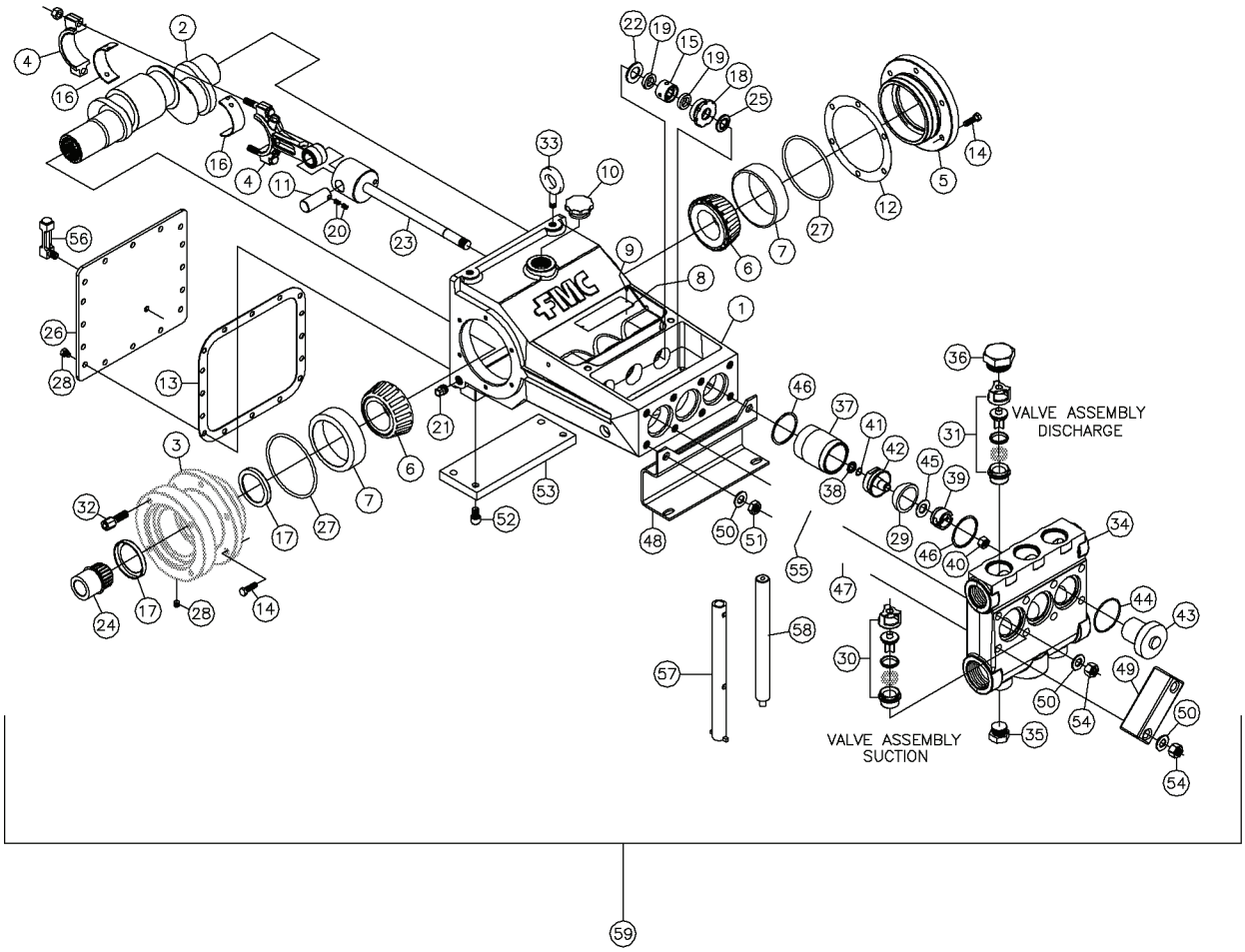

https://truckmanualshub.com/

Water Pump Components Fig 14-14

REF. NO.	*	PART NO.	DESCRIPTION	QTY.	REMARKS
1		278882002	PUMP CASE	1	
2		278882003	CRANK SHAFT	1	
3		278882004	BEARING HOUSING	1	
4		278882005	CONNECTING ROD	3	
5		278882006	BEARING HOUSING	1	
6		278882008	BEARING CONE	2	
7		278882009	BEARING CUP	2	
8		NA	NAME PLATE	1	
9		248507009	SCREW - #4 X 3/16” LG SELF - TAPPING	2	
10		276521025	OIL CAP	1	
11		278882010	WRIST PIN	3	
12		278882012	SHIM	A/R	
13		278882013	GASKET COVER	1	
14		228460003	CAPSCREW - 3/8-16 X 1 1/4 HEX HD	12	
15		278882015	SLEEVE	3	
16		278882016	SHELL BEARING	6	
17		278882017	SEAL	2	
18		278882018	ROD SEAL RETAINER	3	
19		904540035	OIL SEAL	6	
20		278882019	SET SCREW	6	
21		276521047	PLUG -1/2” PIPE, MAG	2	
22		278882020	WASHER PACKING	3	
23		278882021	CROSS HEAD ASSEMBLY	3	
24		278882022	CROSS OVER SUB	1	
25		904540049	WASHER-BARRIER	3	
26		278882037	BACK COVER	1	
27		278882007	O-RING - UNIFORM #160	2	
28		278882039	CAPSCREW - 3/8-16 X 3/4 LG HEX HEAD	16	
29		278882024	PISTON CUP	3	
30		225946033	VALVE ASSEMBLY-SUCTION	3	
			Continued On Next Page		

https://truckmanualshub.com/

Water Pump Components Fig 14-14

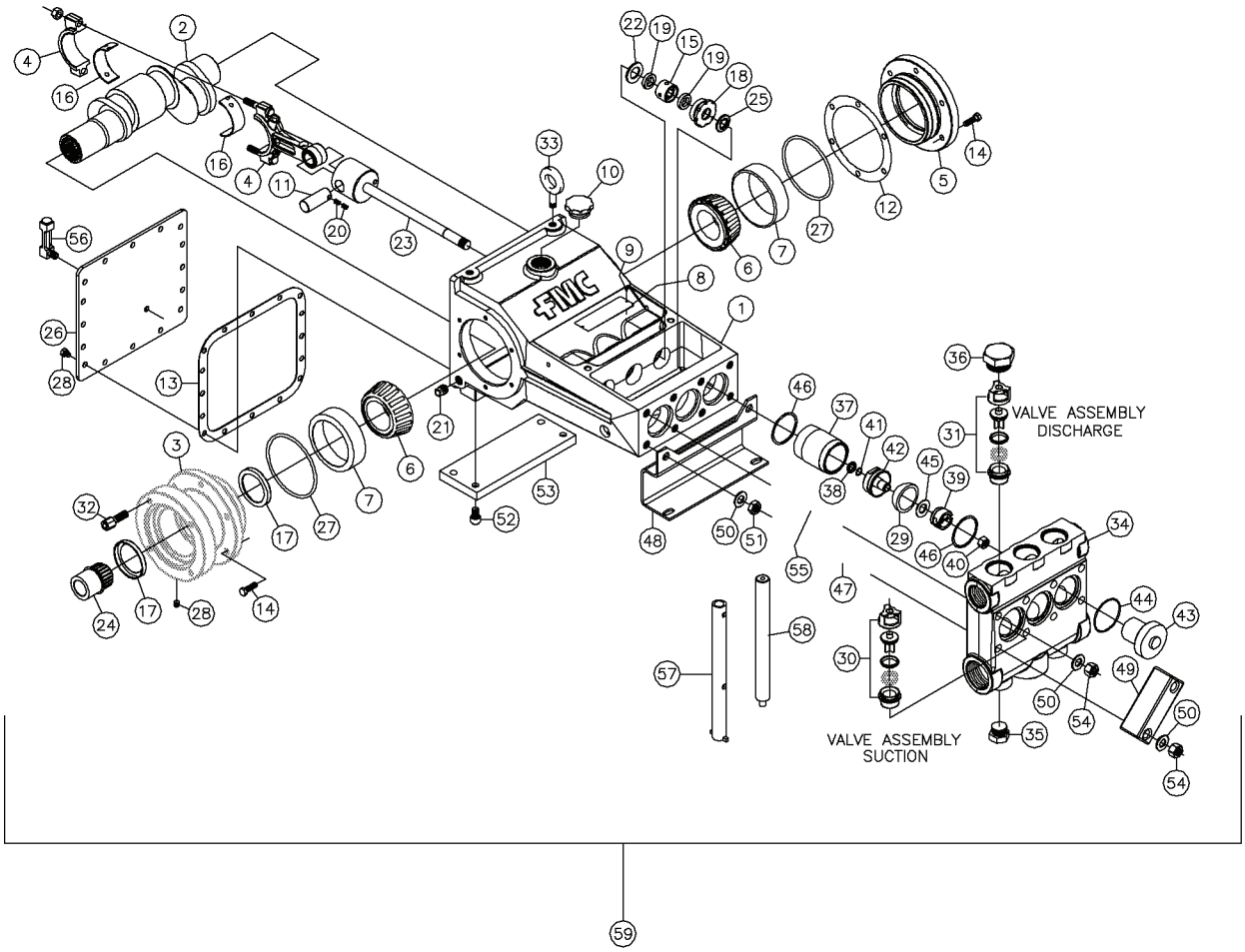

https://truckmanualshub.com/

Water Pump Components Fig 14-14

REF. NO.	*	PART NO.	DESCRIPTION	QTY.	REMARKS
31		225946025	VALVE ASSEMBLY-DISCHARGE	3	
32		278882027	SOCKET HEAD CAP SCREW	4	
33		278882036	EYE BOLT - 1/2 X 1-1/2	4	
34		240141005	FLUID CYLINDER	1	
35		225946017	PLUG-1 3/16-12 UN-2A	3	
36		225946011	PLUG-1 7/8-12 UN-2A	3	
37		278882028	PISTON CYLINDER	3	
38		240141009	SEAL HOLDER	3	
39		240141011	PISTON NUT	3	
40		228460023	HEX NUT-SPECIAL BRASS	2	
41		228460029	O-RING	3	
42		278882029	PISTON HOLDER	3	
43		228460027	CYLINDER COVER	3	
44		225946021	O-RING	3	
45		240141015	PISTON WASHER	3	
46		904540105	GASKET	6	
47		278882030	STUD	6	
48		278882031	FRONT FOOT	1	
49		904540059	CLAMP-COVER	3	
50		904540061	WASHER-5/8	10	
51		278882033	JAM NUT	2	
52		278882034	SOCKET HEAD CAP SCREW	2	
53		278882035	REAR FOOT	1	
54		904540063	NUT- 5/8-11	8	
55		904540057	STUD-SHORT	2	
56		278882032	LIQUID LEVEL GAUGE	1	
57		240141019	TOOL - PISTON CUP REMOVAL	1	
58		240141017	TOOL - VALVE INSTALLATION	1	
59		278825001	PUMP - WATER	1	(INC ALL ITEMS IN THIS FIGURE)

https://truckmanualshub.com/

Thrust Limiter Valve Components Fig 14-15

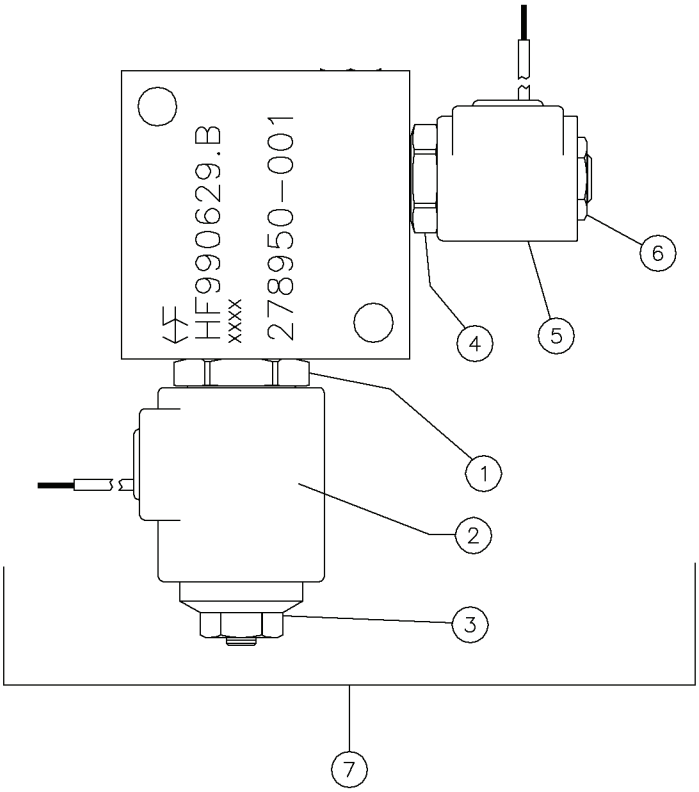

https://truckmanualshub.com/

Thrust Limiter Valve Components Fig 14-15

REF. NO.	*	PART NO.	DESCRIPTION	QTY.	REMARKS
1		250131003	CARTRIDGE - RELIEF W/ PILOTED SPOOL	1	(INC SEAL KIT & NUT)
1A		151954001	SEAL KIT	1	
2		251112005	COIL - 10 DL 12V/SPL	1	
3		250131007	NUT - COIL	1	
4		250131005	CARTRIDGE - 2 WAY NC HP	1	(INC SEAL KIT & NUT)
4A		278917005	SEAL KIT	1	
5		251117009	COIL - #8	1	
6		244725007	NUT - COIL	1	
7		278950001	VALVE - THRUST LIMITER	1	(INC ALL ITEMS IN THIS FIGURE)

https://truckmanualshub.com/

Rack Control Valve Components Fig 14-16

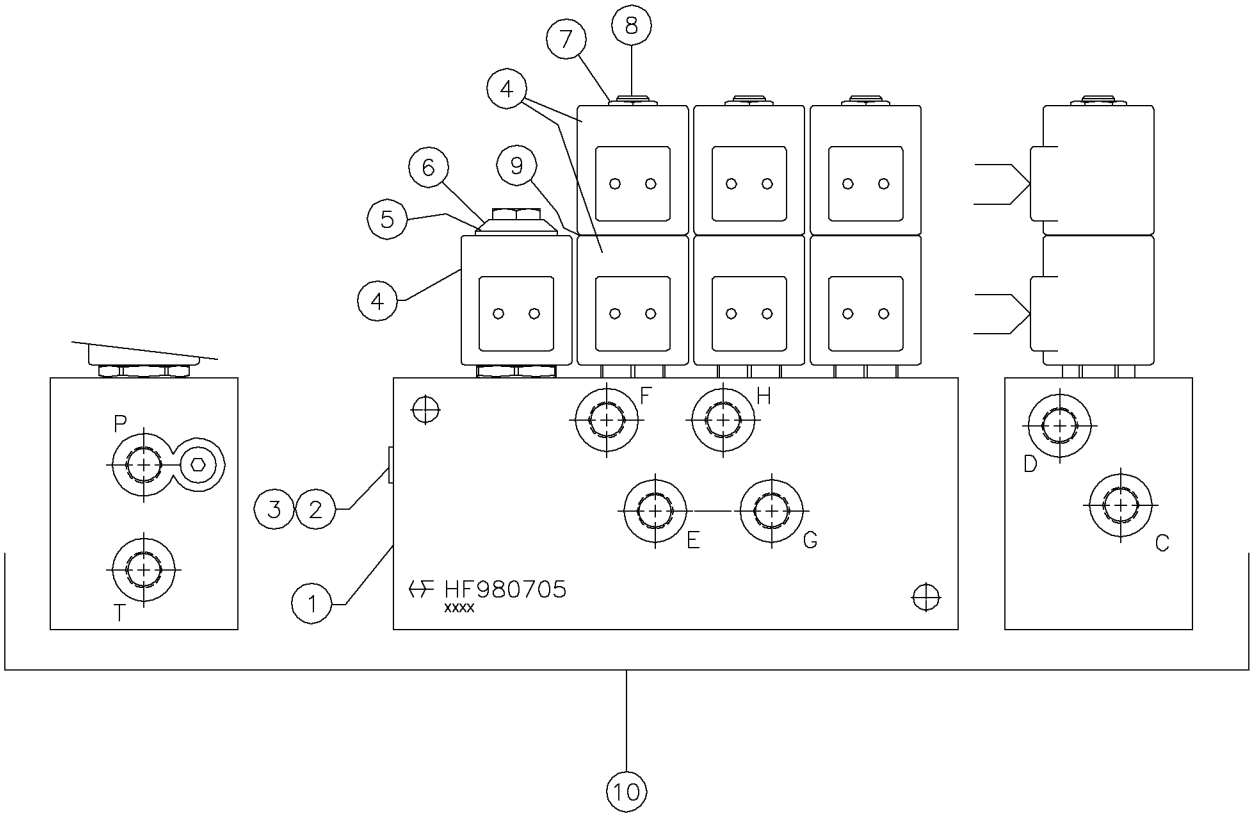

https://truckmanualshub.com/

Rack Control Valve Components Fig 14-16

REF. NO.	*	PART NO.	DESCRIPTION	QTY.	REMARKS
1			BLOCK	1	NSS
2		240324011	PLUG-SAE	1	
2A		1749025	SEAL-O RING 15007 (90D)	1	
3		240326003	PLUG-ORIFICE	1	
4		251112005	COIL - 10 DL 12V/SPL	7	
5		228128003	CARTRIDGE-SOLENOID	1	(INC SEAL KIT & NUT)
5A		206271007	REPAIR KIT	1	
6		280624001	NUT - RAIN PROOF COIL	1	
7		224886007	NUT	3	
8		251109003	CARTRIDGE - SOLENOID	3	(INC SEAL KIT & NUT)
8A		206271007	REPAIR KIT	1	
9		228129007	SPACER	3	
10		288661001	VALVE-4 SECTION SOLENOID	1	(INC ALL ITEMS IN THIS FIGURE)

https://truckmanualshub.com/

Brake Valve Components Fig 14-17

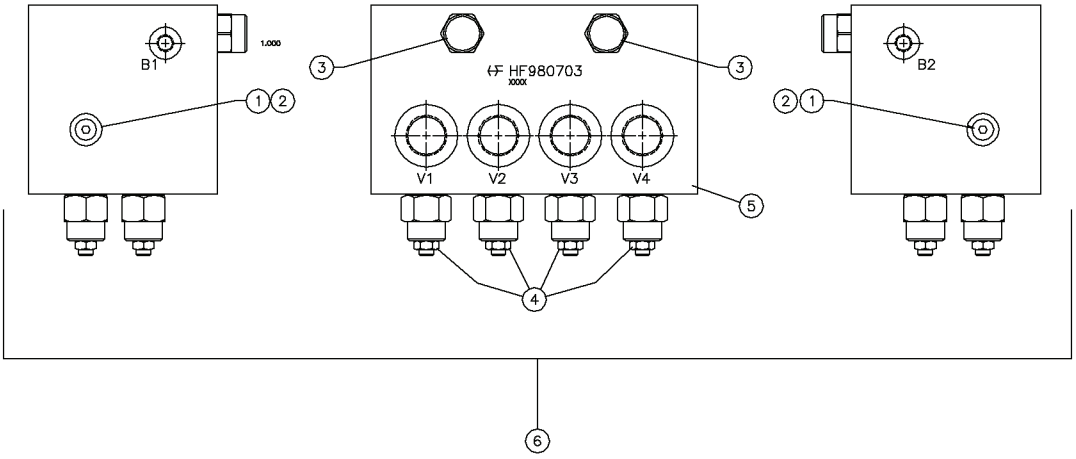

https://truckmanualshub.com/

Brake Valve Components Fig 14-17

REF. NO.	*	PART NO.	DESCRIPTION	QTY.	REMARKS
1		230746013	VALVE CARTRIDGE	2	
1A		151944001	SEAL KIT	1	
2		240324011	PLUG-SAE	2	
2A		1749025	SEAL-O RING 15007 (90D)	1	
3		251114003	PILOTED 3 WAY- SPOOL	2	
3A		206271007	REPAIR KIT	1	
4		251114005	VALVE - (SUN)	4	
5			BLOCK	1	NSS
6		251114001	VALVE - TRACK DRIVE	1	(INC ALL ITEMS IN THIS FIGURE)

https://truckmanualshub.com/

Hydraulic Return Components Fig 14-18

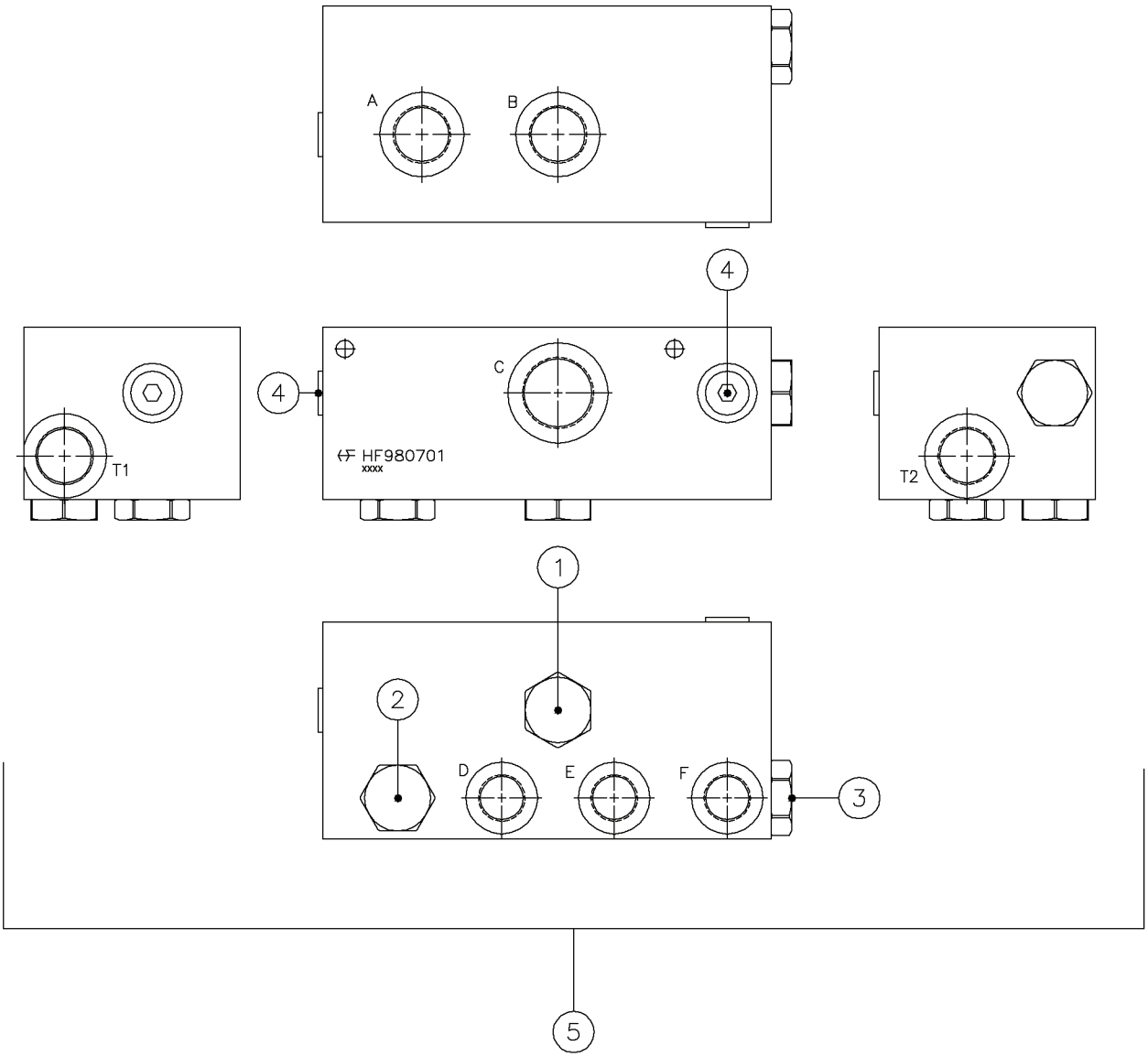

https://truckmanualshub.com/

Hydraulic Return Components Fig 14-18

REF. NO.	*	PART NO.	DESCRIPTION	QTY.	REMARKS
1		251107003	VALVE - CHECK	1	
1A		251107005	SEAL KIT	1	
2		251107007	VALVE - CHECK	1	
2A		251107005	SEAL KIT	1	
3		251107009	VALVE - CHECK	1	
3A		251107005	SEAL KIT	1	
4		251107011	PORT PLUG - SAE 10	2	
5		251107001	VALVE - HYDRAULIC RETURN	1	(INCLUDES ALL ITEMS IN THIS FIGURE)

https://truckmanualshub.com/

Vise Valve Components Fig 14-19

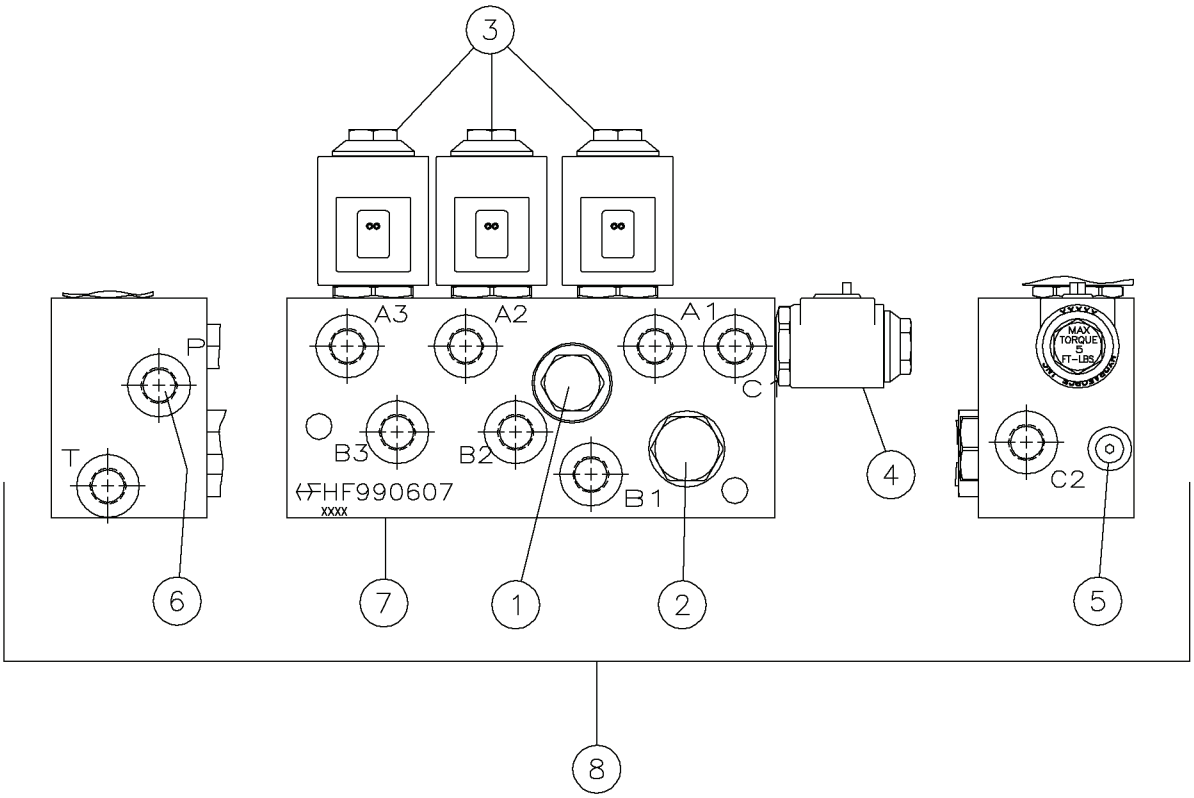

https://truckmanualshub.com/

Vise Valve Components Fig 14-19

REF. NO.	*	PART NO.	DESCRIPTION	QTY.	REMARKS
1		500659003	VALVE-CHECK, CARTRIDGE	1	
1A		228128009	SEAL KIT	1	
2		500659013	VALVE-PILOT CHECK,CART.,4:1	1	
2A		500659017	SEAL KIT-CHECK VALVE	1	
3		251113003	CARTRIDGE - SOLENOID	3	(INC SEAL KIT & NUT)
3A		206271007	REPAIR KIT	3	
3B		251112005	COIL - 10 DL 12V/SPL	3	
3C		280624001	NUT - RAIN PROOF COIL	3	
4		251113005	CARTRIDGE - SOLENOID	1	(INC SEAL KIT & NUT)
4A		212821009	SEAL KIT	1	
4B		251117009	COIL - #8	1	
4C		251113007	NUT - RAIN PROOF COIL	1	
5		240324015	PLUG-SAE	5	
5A		240324017	SEAL KIT	1	
6		240326003	PLUG-ORIFICE	1	
7			BLOCK	1	NSS
8		251113001	VALVE - VISE LOCK	1	(INC ALL ITEMS IN THIS FIGURE)

https://truckmanualshub.com/

Rod Loader Valve Components Fig 14-20

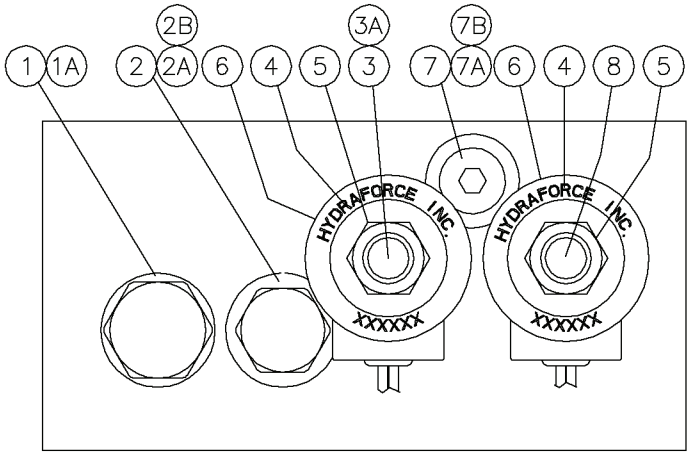

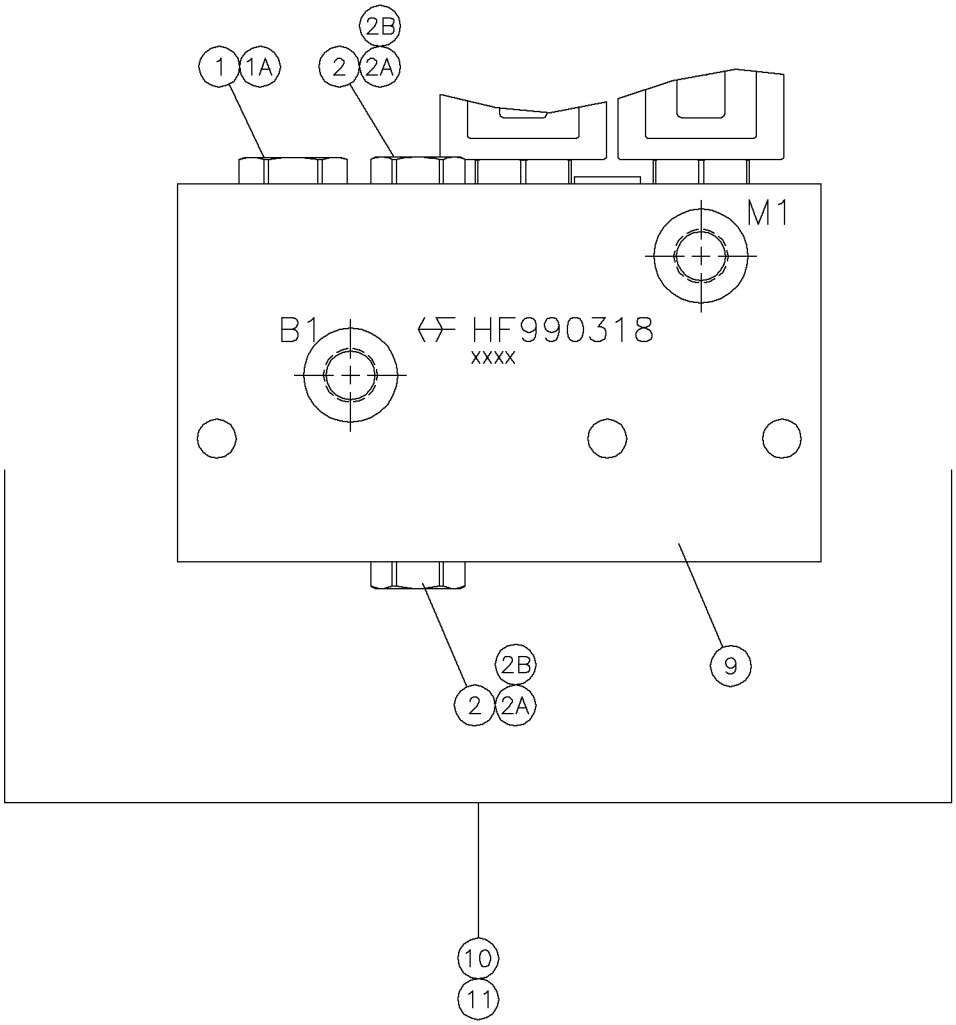

https://truckmanualshub.com/

Rod Loader Valve Components Fig 14-20

REF. NO.	*	PART NO.	DESCRIPTION	QTY.	REMARKS
1		228179003	FLOW DIVIDER/COMBINER	1	
1A		228179005	SEAL KIT	1	
2		205737003	CARTRIDGE - CHECK VALVE	2	
2A		246415003	PILOT PISTON	2	
2B		228128009	SEAL KIT	1	
3		228129003	CARTRIDGE-SOLENOID	1	(INC REPAIR KIT & NUT)
3A		206271007	REPAIR KIT	1	
4		251112005	COIL - 10 DL 12V/SPL	4	
5		224886007	NUT	2	
6		228129007	SPACER	2	
7		500659021	SAE PLUG	1	
7A		240326003	PLUG-ORIFICE	1	
7B		59088057	O-RING AS-906-C90	1	
8		246415009	CARTRIDGE - SOLENOID	1	(INC REPAIR KIT & NUT)
9			BLOCK	1	NSS
10		206271007	REPAIR KIT	1	
11		278859001	VALVE - ROD LOADER	1	INC. ALL ITEMS IN THIS FIG.

https://truckmanualshub.com/

Valve Components - Stakedown Fig 14-21

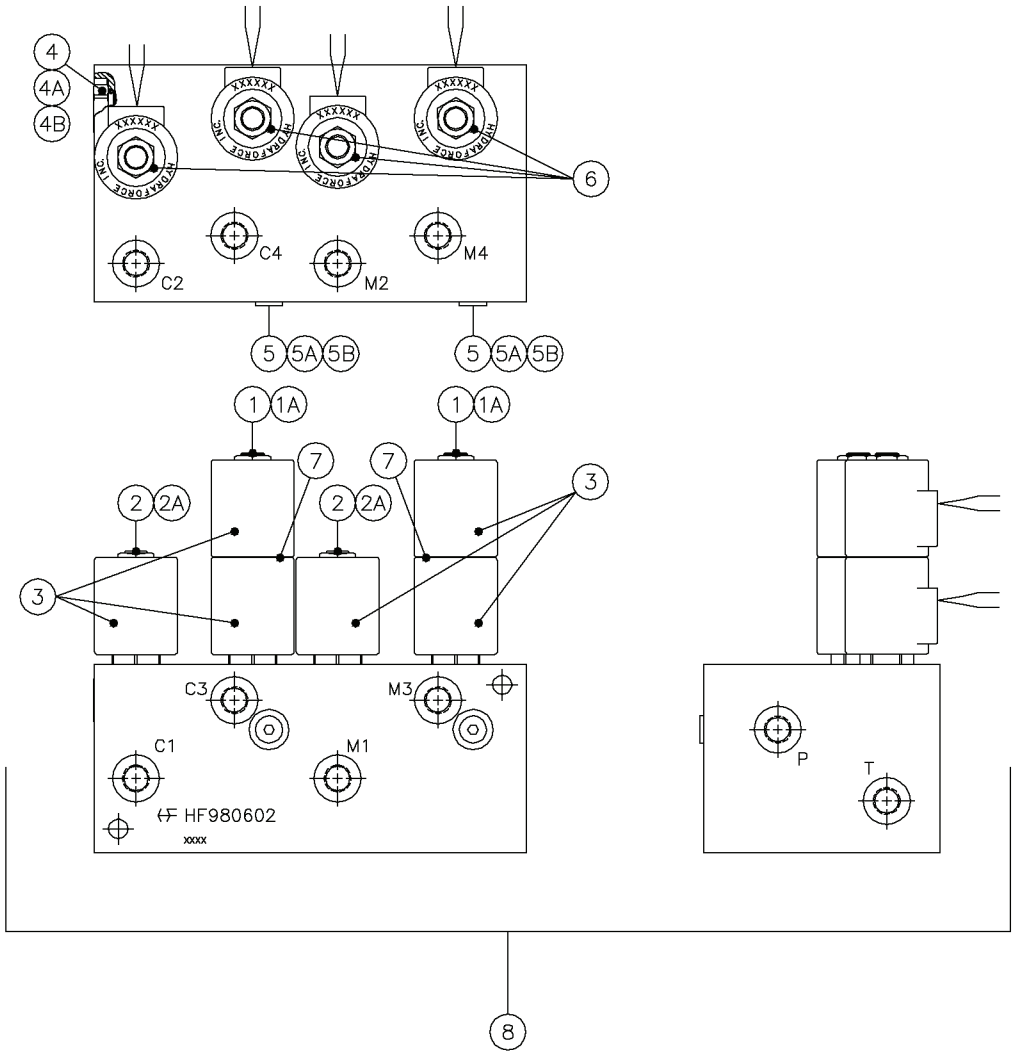

https://truckmanualshub.com/

Valve Components - Stakedown Fig 14-21

REF. NO.	*	PART NO.	DESCRIPTION	QTY.	REMARKS
1		251112003	SOLENOID VALVE	2	(INC REPAIR KIT & NUT)
1A		206271007	REPAIR KIT	2	
2		251072003	SOLENOID VALVE	2	(INC SEAL KIT & NUT)
2A		235500005	SEAL KIT	2	
3		251112005	COIL - 10 DL 12V/SPL	6	
4		205737003	CARTRIDGE - CHECK VALVE	1	
4A		228128009	SEAL KIT	1	
4B		246415003	PILOT PISTON	1	
5		251112007	ORFICE DISC	2	
5A		240324011	PLUG-SAE	2	
5B		240324013	SEAL KIT	2	
6		224886007	NUT	4	
7		228129007	SPACER	2	
8		288660001	VALVE-ELECTRIC STAKEDOWN	1	(INC ALL ITEMS IN FIGURE)

https://truckmanualshub.com/

Torque Limiter Valve Components Fig 14-22

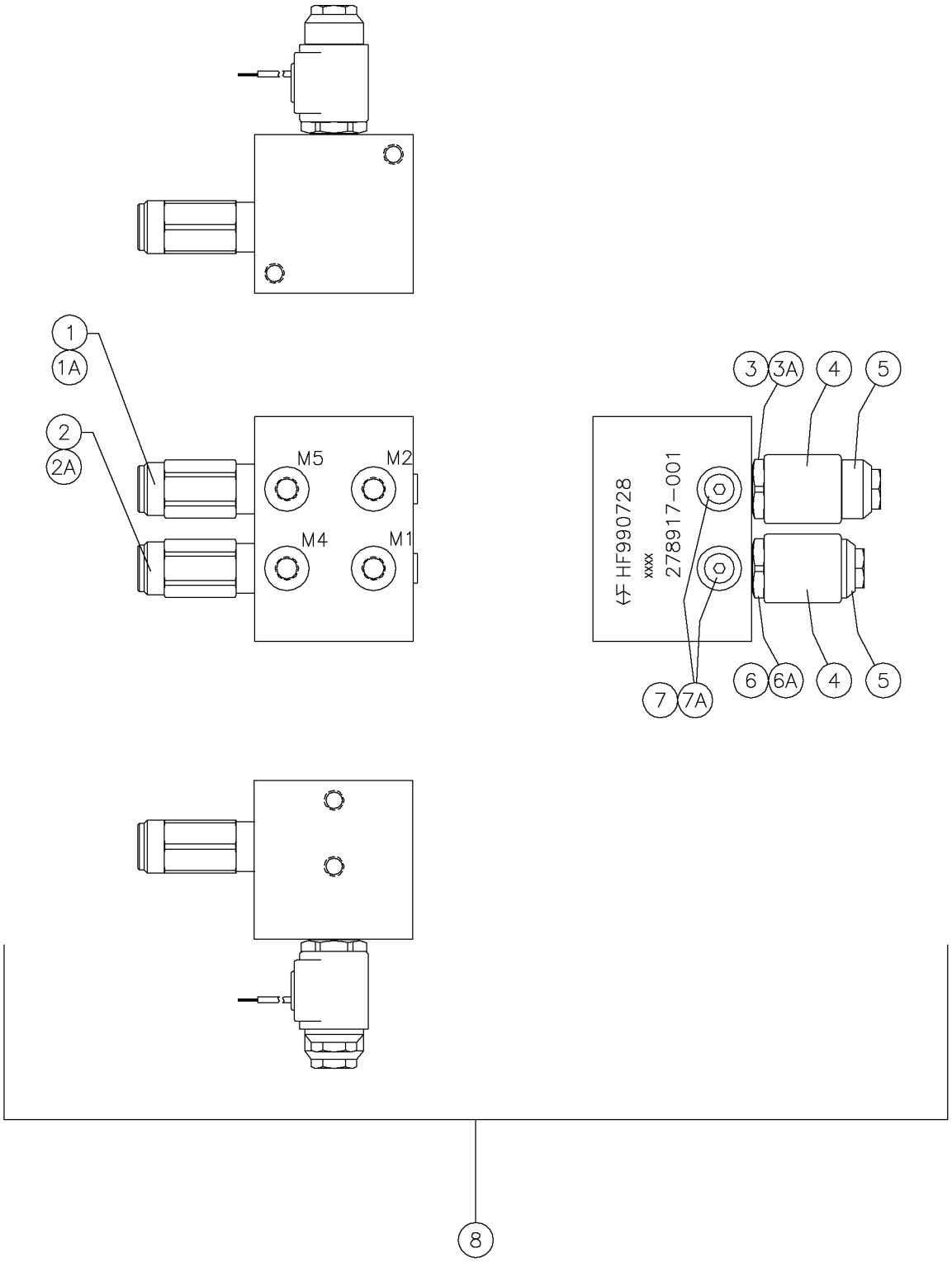

https://truckmanualshub.com/

Torque Limiter Valve Components Fig 14-22

REF. NO.	*	PART NO.	DESCRIPTION	QTY.	REMARKS
1		278917003	RELIEF - HIGH PRESSURE	1	
1A		278917005	SEAL KIT	1	
2		278917007	RELIEF - HIGH PRESSURE	1	
2A		224580003	SEAL KIT	1	
3		278917009	POPPET - 2 WAY HIGH PRESSURE N.C.	1	
3A		278917005	SEAL KIT	1	
4		251117009	COIL - #8	2	
5		251113007	NUT - RAIN PROOF COIL	1	
6		278917011	POPPET - 2 WAY HIGH PRESSURE N.O.	1	
6A		278917005	SEAL KIT	1	
7		250324011	PLUG-SAE	2	
7A		250324013	SEAL KIT	1	
8		278917001	VALVE - TORQUE LIMITER	1	(INC ALL ITEMS IN THIS FIGURE)

https://truckmanualshub.com/

Solenoid Valve Components Fig 14-23

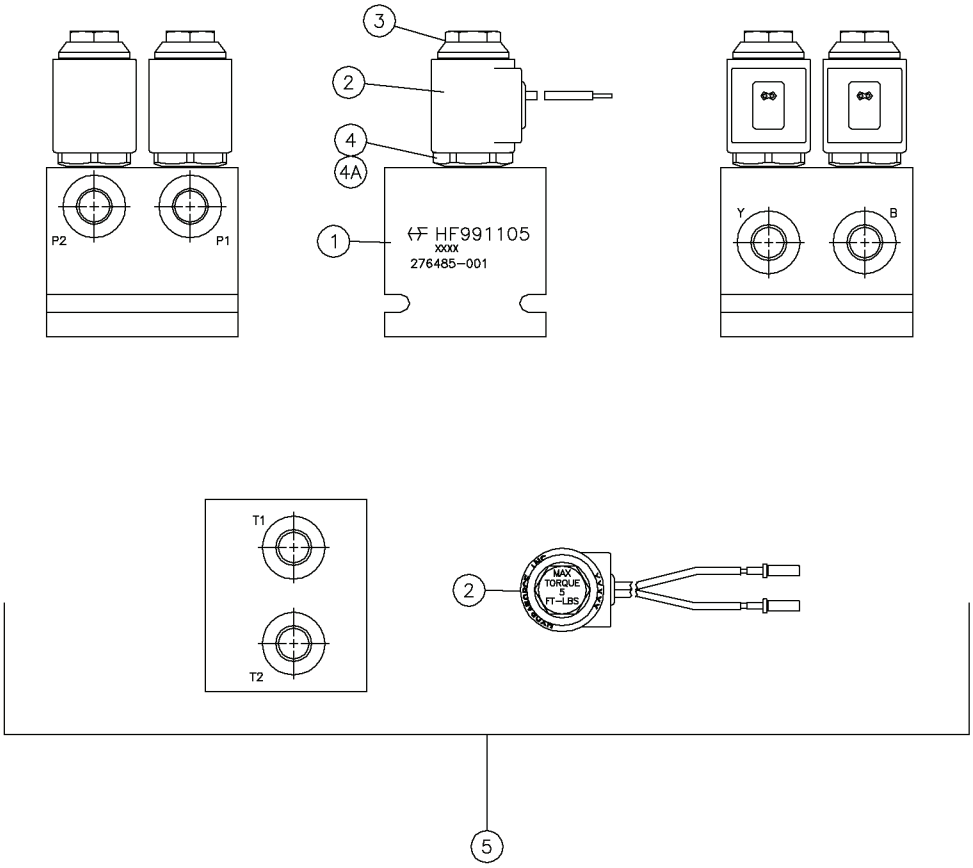

https://truckmanualshub.com/

Solenoid Valve Components Fig 14-23

REF. NO.	*	PART NO.	DESCRIPTION	QTY.	REMARKS
1			BODY-VALVE	1	NSS
2		251117009	COIL - #8	2	
3		280624001	NUT - RAIN PROOF COIL	2	
4		278845003	CARTRIDGE - SOLENOID	2	
4A		110467003	SEAL KIT	1	
5		276485001	VALVE - 2 SPEED / BRAKE	1	(INC ALL ITEMS IN THIS FIGURE)

https://truckmanualshub.com/

Three Speed/Loop Flush Valve Components Fig 14-24

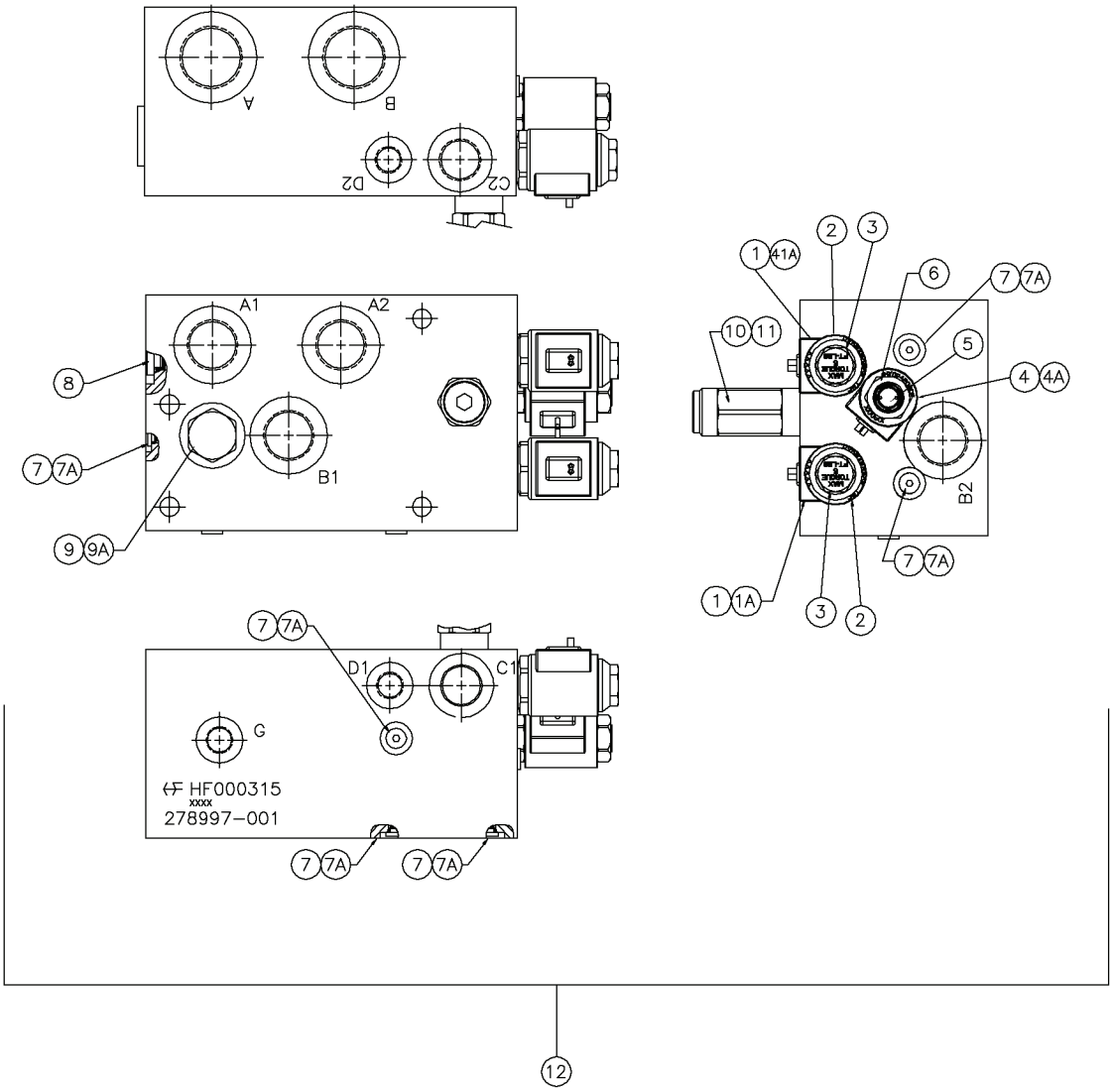

https://truckmanualshub.com/

Three Speed/Loop Flush Valve Components Fig 14-24

REF. NO.	*	PART NO.	DESCRIPTION	QTY.	REMARKS
1		251117007	CARTRIDGE - SOLENOID	2	(INC SEAL KIT & NUT)
1A		110467003	SEAL KIT	2	
2		251117009	COIL - #8	2	
3		280624001	NUT - RAIN PROOF COIL	2	
4		296251233	VALVE - PRESSURE REDUCING	1	
4A		110467003	SEAL KIT	1	
5		251108003	COIL	1	
6		251108017	NUT - COIL RETAINING	1	
7		240324015	PLUG-SAE	8	
7A		240324017	SEAL KIT	8	
8		251117019	PORT PLUG	1	
9		251117003	SHUTTLE - HOT OIL (SPRINGLESS)	1	
9A		251117005	SEAL KIT	1	
10		296251232	VALVE - RELIEF	1	
11		240324005	SEAL KIT	1	
12		278997001	VALVE - THREE SPEED LOOP FLUSH	1	(INC ALL ITEMS IN THIS FIGURE)

https://truckmanualshub.com/

Proportional/Dump Valve Components Fig 14-25

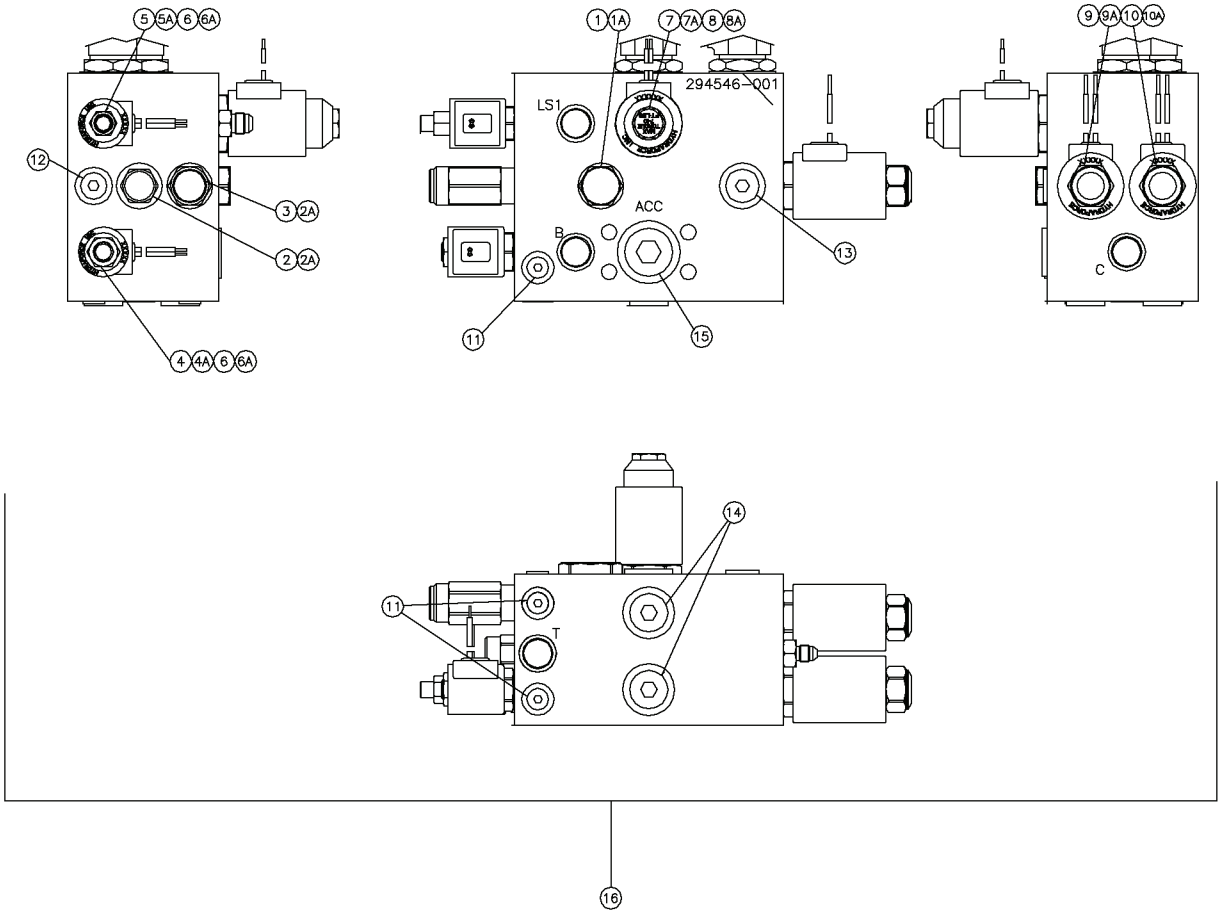

https://truckmanualshub.com/

Proportional/Dump Valve Components Fig 14-25

REF. NO.	*	PART NO.	DESCRIPTION	QTY.	REMARKS
1		296251243	VALVE - HIGH PRESSURE CHECK	1	
1A		251117005	SEAL KIT	1	
2		296251244	PRESSURE REGULATOR	1	
2A		296251248	SEAL KIT	2	
3		296251245	RELIEF - HIGH PRESSURE	1	
4		251120003	POPPET - 2 WAY N/C	1	
4A		251120005	SEAL KIT	1	
5		294550001	CARTRIDGE - SOLENOID POPPET	1	
5A		294549001	KIT - POLY O-RING	1	
6		251117009	COIL - #8	2	
6A		244725007	NUT - COIL	2	
7		296251246	POPPET - 2 WAY N/O	1	
7A		296251249	SEAL KIT	1	
8		251112005	COIL - 10 DL 12V/SPL	1	
8A		282520019	COIL NUT	1	
9		296251247	PROPORTIONAL FLOW CONTROL	2	
9A		296251250	SEAL KIT	2	
10		282520003	SOLENOID - #10 W/LEADS DEUTSCH SOCKETS	2	
10A		296251285	NUT - RAIN PROOF COIL	2	
11		240324011	PLUG-SAE	3	
12		500659021	SAE PLUG	1	
13		236494005	PLUG-SAE	1	
14		251107011	PORT PLUG - SAE 10	2	
15		251117019	PORT PLUG	1	
16		294546001	VALVE-PROPORTIONAL/DUMP	1	(INC ALL ITEMS IN THIS FIGURE)

https://truckmanualshub.com/

Shuttle Valve Components Fig 14-26

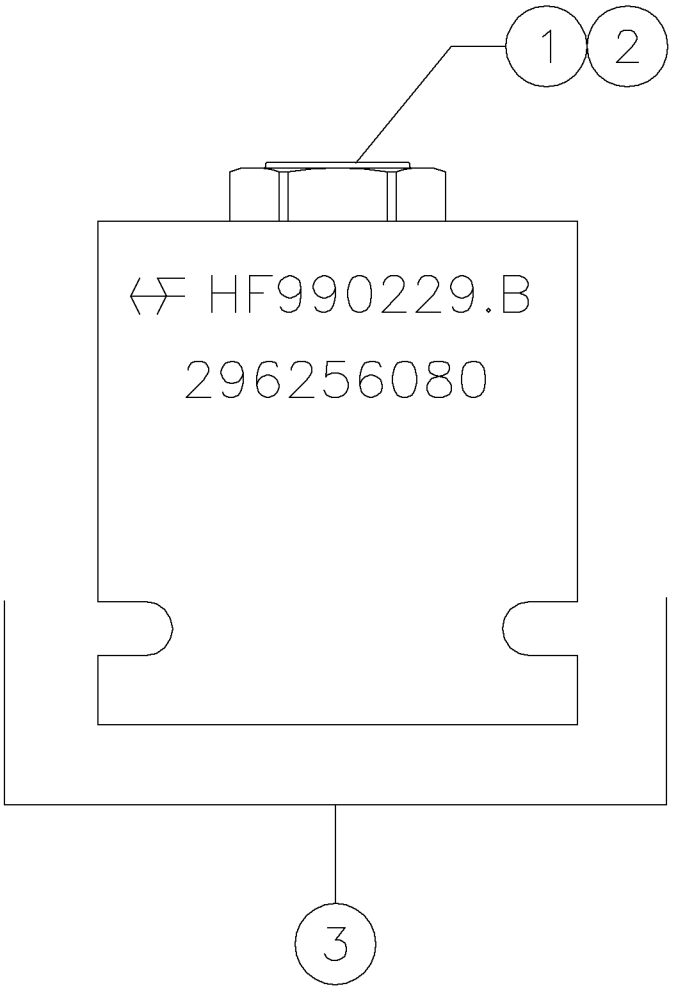

https://truckmanualshub.com/

Shuttle Valve Components Fig 14-26

REF. NO.	*	PART NO.	DESCRIPTION	QTY.	REMARKS
1		251118003	CHECK VALVE	1	
2		251118005	SEAL KIT	1	
3		296256080	VALVE - GAUGE SHUTTLE	1	(INC ALL ITEMS IN THIS FIGURE)

https://truckmanualshub.com/

Valve Components - Rod Loader Fig 14-27

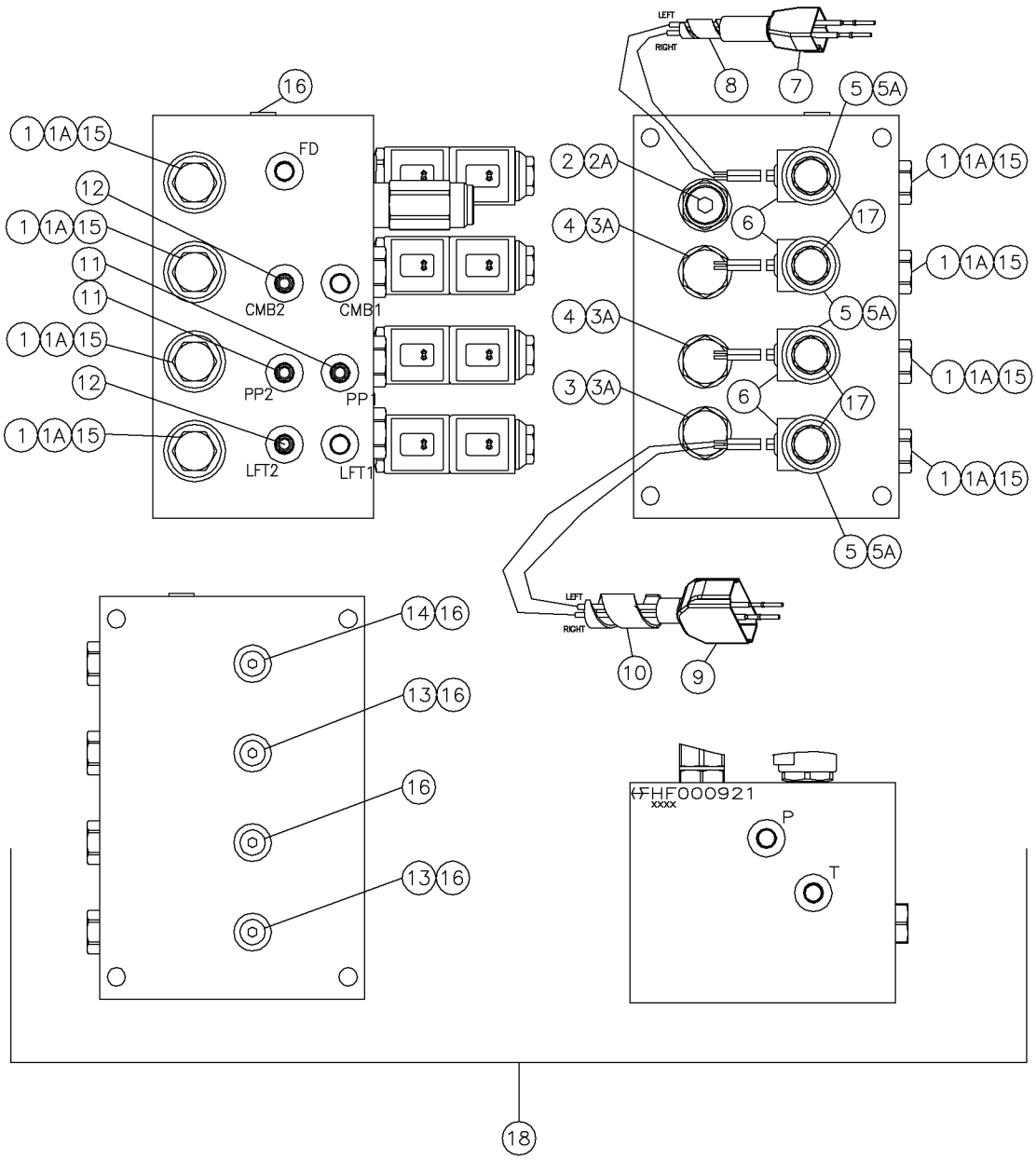

https://truckmanualshub.com/

Valve Components - Rod Loader Fig 14-27

REF. NO.	*	PART NO.	DESCRIPTION	QTY.	REMARKS
1		296251083	CARTRIDGE - CHECK VALVE	8	
1A		296251051	SEAL KIT	8	
2		296251084	CARTRIDGE - PRESSURE RELIEF	1	
2A		296251085	SEAL KIT	1	
3		296251086	VALVE - FLOW DIVIDER	1	
3A		296251088	SEAL KIT	3	
4		296251087	VALVE - FLOW DIVIDER	2	
5		296251089	SPOOL - 4-WAY, 3 POS.	4	
5A		296251058	SEAL KIT	4	
6		251117009	COIL - #8	8	
7		296251090	BOOT	1	
8		296251092	SPIRAL WRAP TUBING	1	
9		296251091	BOOT	1	
10		296251076	SPIRAL WRAP TUBING	1	
11		296251093	ORIFICE PLUG	2	
12		296251094	ORIFICE PLUG	2	
13		296251095	ORIFICE PLUG	2	
14		296251096	ORIFICE PLUG	1	
15		246415003	PILOT PISTON	8	
16		240324011	PLUG-SAE	5	
17		251113007	NUT - RAIN PROOF COIL	4	
18		278293001	VALVE - ROD LOADER	1	(INC ALL ITEMS IN FIGURE)

https://truckmanualshub.com/

Control Valve Components Fig 14-28

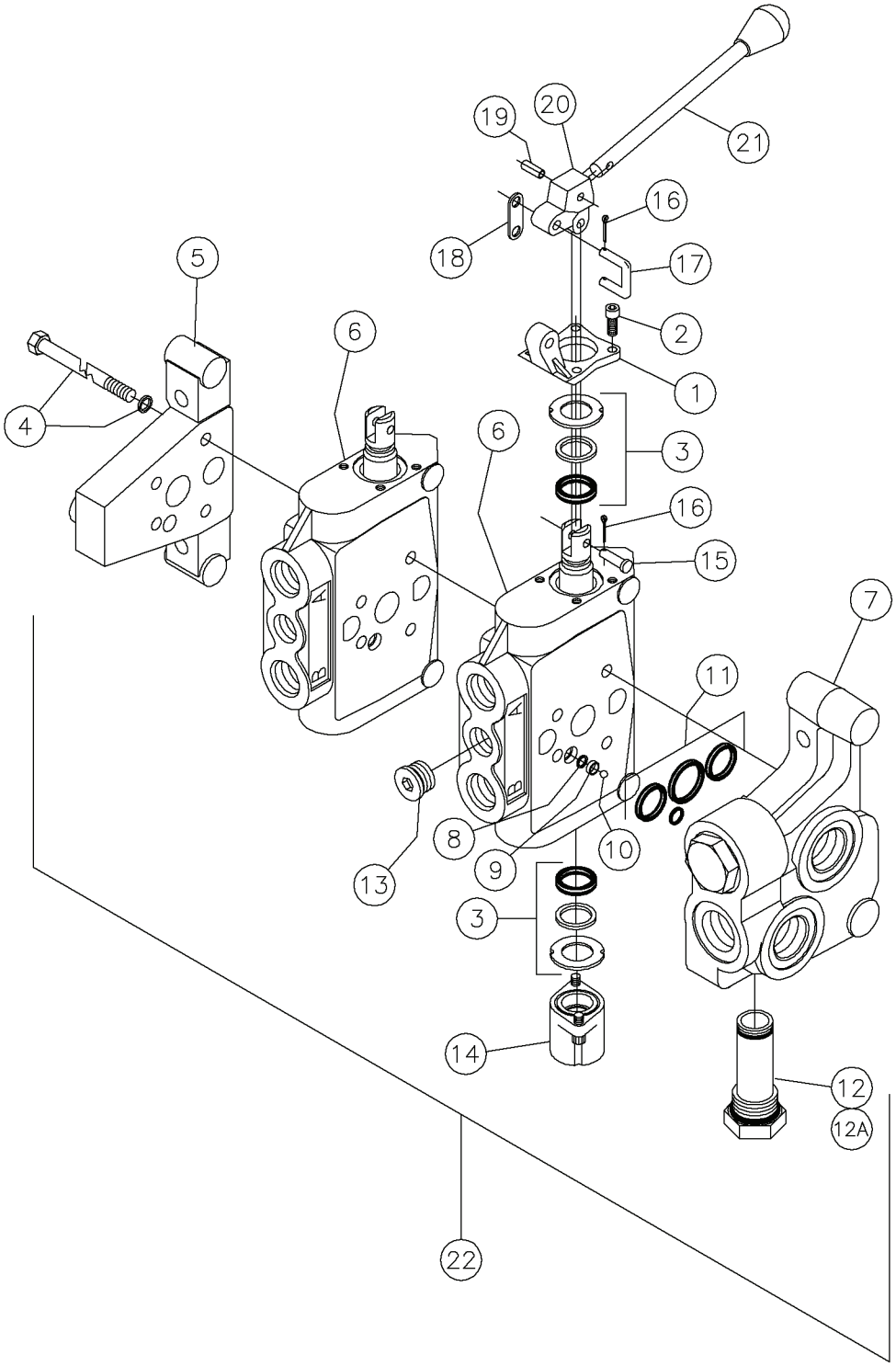

https://truckmanualshub.com/

Control Valve Components Fig 14-28

REF. NO.	*	PART NO.	DESCRIPTION	QTY.	REMARKS
1		214076003	BRACKET-HANDLE	2	
2		3147089	SCREW-1/4-20X1/2 SOCKET HEAD	4	
3		240923003	SPOOL SEAL KIT	4	
4		251115003	VALVE STUD ASSEMBLY KIT	1	
5		251115005	OUTLET COVER ASSY (RIGHT)	1	
6		251115007	WORK SECTION	2	(INC ONE OF REF 1, 8-10, 13, 14, 17-19, TWO OF REF 3, THREE OF REF 16, & FOUR OF REF 2)
7		251115009	INLET COVER ASSEMBLY	1	
8		240923013	WASHER	2	
9		240923015	SLEEVE	2	
10		87938001	CAP SHAFT	2	
11		240923017	SEAL KIT - SECTION	3	
12		214076017	PLUG-NO RELIEF	1	
12A		251115011	SEAL KIT	1	
13		251115013	PLUG - 10M	2	
14		214076015	SPRING RETURN TO NEUTRAL	2	
15		2110003	PIN - CLEVIS 1/4 X 7/8 - 47/64 UL ZINC	2	
16		510035	PIN-3/32 X 1/2 COTTER	6	
17		4333003	LINK-	2	
18		4333005	PLATE-LINK	2	
19		251115015	SPRING PIN	2	
20		251115017	LINK - HANDLE	2	
21		251115019	HANDLE - ASSEMBLY - V40	2	
22		251115001	VALVE-2 SECTION V40-1145	1	(INC ALL ITEMS IN THIS FIGURE)

https://truckmanualshub.com/

Valve Components - 1" High Pressure Ball Fig 14-29

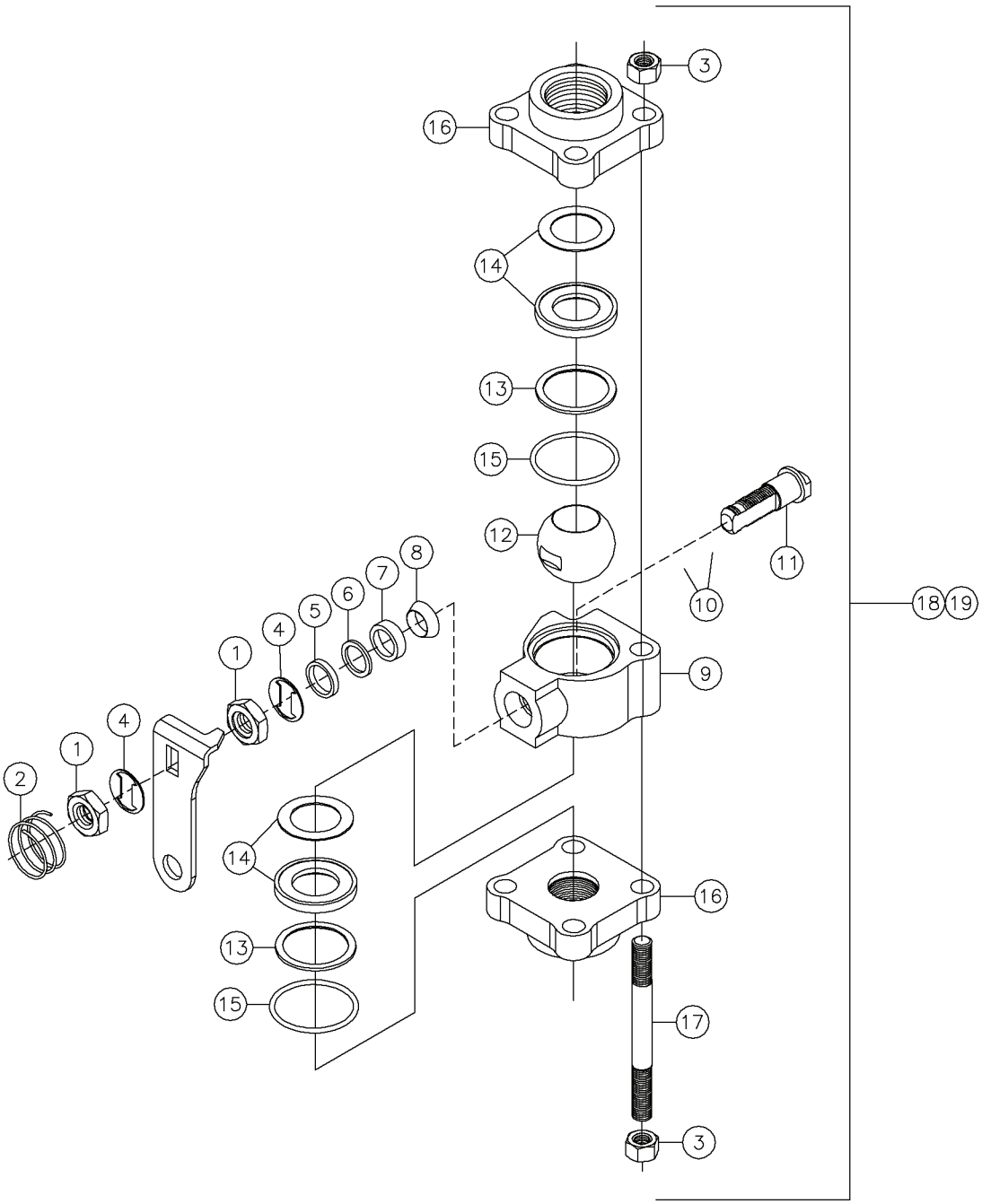

https://truckmanualshub.com/

Valve Components - 1" High Pressure Ball Fig 14-29

REF. NO.	*	PART NO.	DESCRIPTION	QTY.	REMARKS
1		245079003	STEM NUT	2	
2		245079005	GROUNDING SPRING	1	
3		245079037	BODY NUT	8	
4		245079009	STEM SPRING	2	
5		278003003	GLAND	1	
6		245079013	PACKING SUPPORT	1	
7		245079015	TOP PACKING	1	
8		245079017	BOTTOM PACKING	1	
9		278003004	BODY CENTER	1	
10		278003005	BEARING - STEM	2	
11		245079023	STEM	1	
12		245079025	BALL	1	
13		245079027	SUPPORT RING	2	
14		245079029	SEAT/SEAT SPRING	2	
15		245079031	O-RING	2	
16		278003006	FLANGE	2	
17		245079035	BODY STUD	4	
18		245079039	KIT-MAINTENANCE	1	(INC REF 4-6, 10 & 15)
19		278003001	VALVE - 1” 1500 PSI BRASS BALL	1	(INC ALL ITEMS IN THIS FIGURE)

https://truckmanualshub.com/

Auto Greaser Pump Components Fig 14-30r01

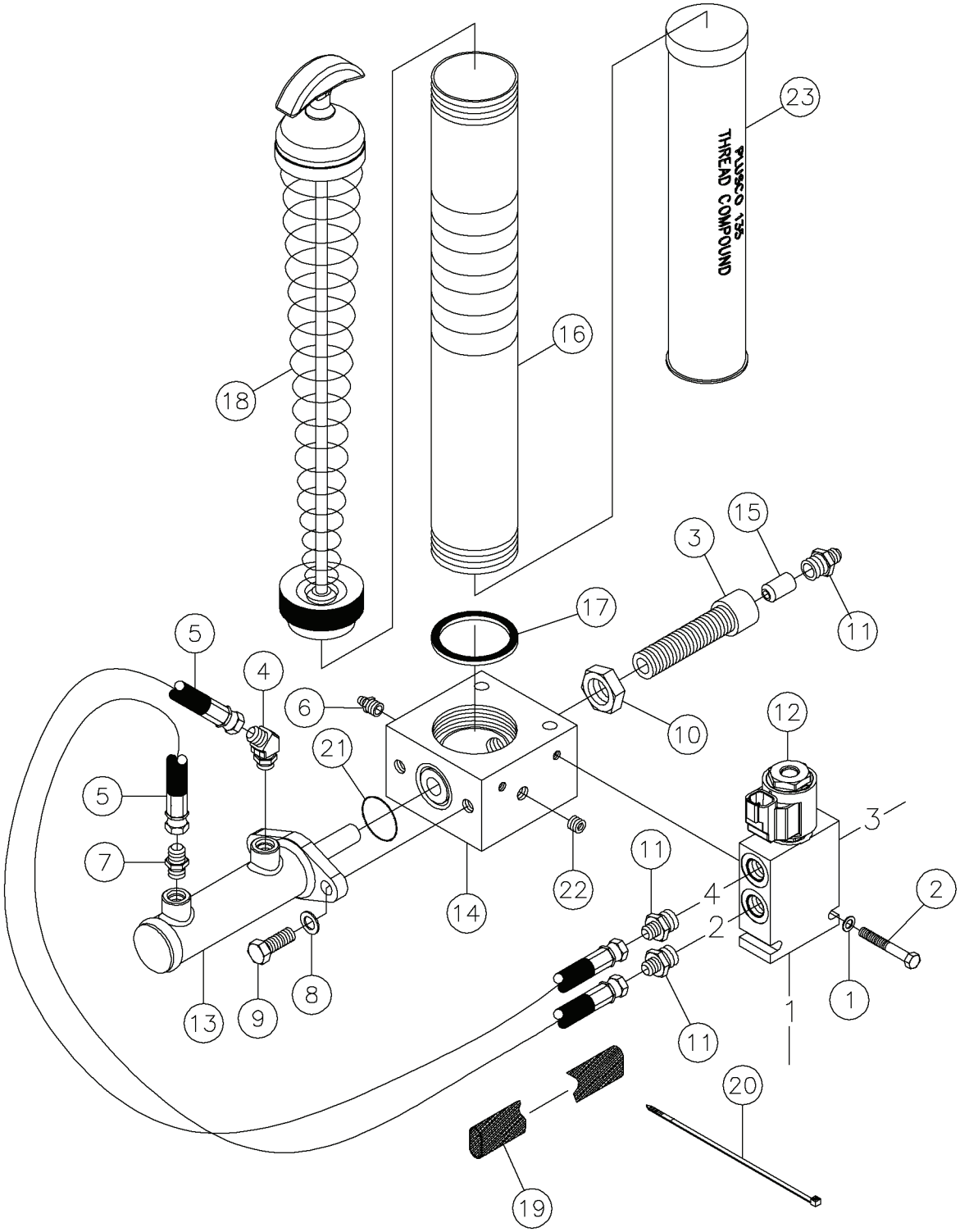

https://truckmanualshub.com/

Auto Greaser Pump Components Fig 14-30r01

REF. NO.	*	PART NO.	DESCRIPTION	QTY.	REMARKS
		Revision Date	June, 2004		Update In Illustration & Parts List.
1		510337603	WASHER-FLATSTD-.25-.31X.75-.07-YZ	2	
2		248107001	BOLT-1/4-20X1 3/4 GR 8 ZINC PL	2	
3		294896001	SLEEVE - GREASE PUMP	1	
4		58295001	FITTING-4M OR X 4M JIC 45 DEG.	1	
5		53843195	HOSE-1/4X16 4FS JIC 3000 PSI	2	
6		586001	ZERK-1/8” ST NPT GREASE	1	
7		60908001	FITTING-4MX4M JIC STR ADAPTER	1	
8		235713001	WASHER - FLATSTRL - .38 - .41 X .81 - .06-YA-A325	2	
9		235727001	BOLT-3/8-16X1 GR8 HEX ZINC PLT	2	
10		456001	NUT-3/4 N.F. HEX JAM	1	
11		57968001	FITTING-STR-4MJ-6MORB	3	
12		294901001	VALVE - GREASER	1	(BREAKDOWN FIG.14-56)
13		294899001	CYLINDER - HYD 1 X 2-3/8	1	(BREAKDOWN FIG.14-55)
14		294895001	HOUSING - GREASE PUMP	1	
15		294905001	VALVE - INSERT CHECK, 1/2”	1	
16		294910001	TUBE - GREASE	1	
17		294902001	GASKET - GREASE TUBE	1	
18		294903001	FOLLOWER - GREASE TUBE AY	1	
19		235824001	CORDURA SLEEVE-NHS-090	A/R	
20		59634001	SINGLE NYTIE - 8”	4	
21		296262010	O-RING - 213 .139 X .921 ID	1	
22		296258613	FITTING -1/8 NPT HEX SOCKET - .25L	1	
23		296262012	THRD CMPND-PLUSCO 135-SINGLE CARTRIDGE	1	
		275927982	THRD CMPND - PLUSCO 135 - 10 PACK	A/R	
		275928982	THRD CMPND - CASE OF 4 / 10 PACKS	A/R	
		294900001	GREASE PUMP AY - VAR DISP		(INC ALL ITEMS IN THIS FIG)

https://truckmanualshub.com/

Auto Greaser Pump Components Fig 14-30

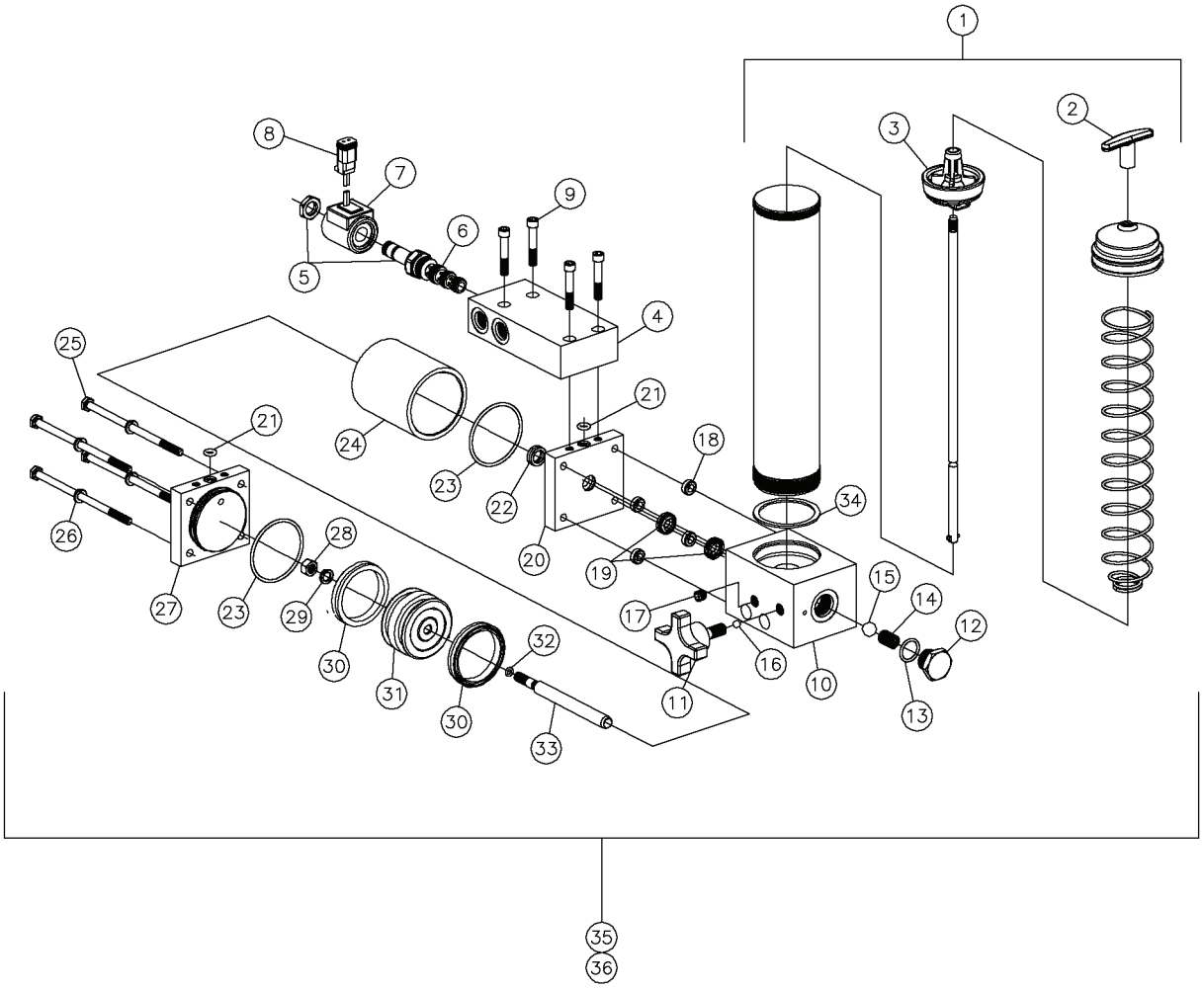

https://truckmanualshub.com/

Auto Greaser Pump Components Fig 14-30

REF. NO.	*	PART NO.	DESCRIPTION	QTY.	REMARKS
1		296263783	GREASE CARTRIDGE HOUSING	1	INC. REF. 2&3
2		296263791	HANDLE	1	
3		296263790	FOLLOWER ASSEMBLY	1	
4		296263776	VALVE BODY	1	
5		296263768	SOLENOID VALVE	1	
6		296263784	SEAL KIT	1	
7		296263767	SOLENOID COIL	1	INC. REF.8
8			CONNECTOR	1	NSS
9		296263775	SCREW-1/4-28 X 1 1/2 SHCS	4	
10		296263777	PUMP BODY	1	
11		296263778	KNOB & STUD-3/8-16 X 1”	1	
12		296263781	CHECK PLUG	1	
13			O-RING	1	NSS
14		296263780	CHECK SPRING	1	
15		296263779	CHECK BALL	1	
16		296263787	BALL	1	
17		296263792	PIPE PLUG	1	
18		296263786	SPACER	4	
19			DOUBLE LIP WIPER	2	NSS
20		296263785	CYLINDER END	1	
21			O-RING	2	NSS
22			U-CUP	1	NSS
23			O-RING	2	NSS
24		296263771	CYLINDER	1	
25		296263769	SCREW-1/4-28 X 5” HEX	4	
26		296263789	LOCKWASHER-1/4	4	
27		296263770	CYLINDER END	1	
28		296263773	NUT-5/16-18 UNF	1	
29		296263788	LOCKWASHER-5/16	1	
30			U-CUP	2	NSS
31		296263772	PISTON	1	
32			O-RING	1	NSS
33		296263774	PLUNGER	1	
34		296263782	PACKING	1	
35		296263766	SEAL KIT	1	INC.REF. 13,19,21-23,30,32
36		296263765	PUMP ASSEMBLY	1	INCLUDES ALL ITEMS IN FIG.

https://truckmanualshub.com/

Measuring Valve Components Fig 14-31r01

FIGURE DELETED DUE TO UPDATE

https://truckmanualshub.com/

Measuring Valve Components Fig 14-31r01

REF. NO.	*	PART NO.	DESCRIPTION	QTY.	REMARKS
		Revision Date	June, 2004		Deleted From Manual

https://truckmanualshub.com/

Measuring Valve Components Fig 14-31

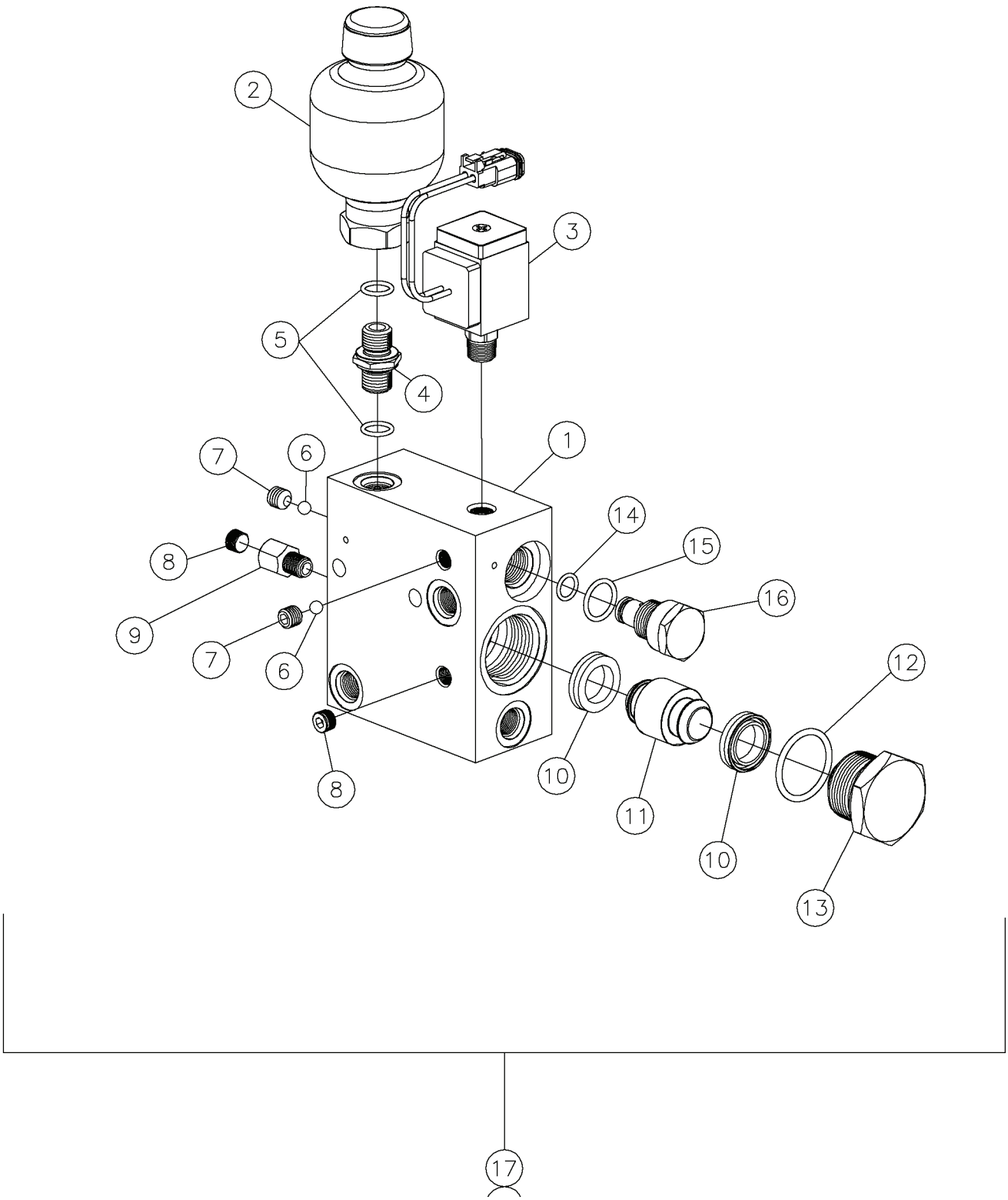

https://truckmanualshub.com/

Measuring Valve Components Fig 14-31

REF. NO.	*	PART NO.	DESCRIPTION	QTY.	REMARKS
1		296263808	MEASURING VALVE BODY	1	
2		296263802	ACCUMULATOR	1	
3		296263806	PRESSURE SWITCH	1	
4		296263803	UNION	1	
5			O-RING	2	NSS
6		296263787	BALL	2	
7		296263804	SET SCREW-3/8”-16	2	
8		296263792	PIPE PLUG-1/8” NPT	2	
9		296263805	CHECK VALVE	1	
10			U-CUP SEAL	2	NSS
11		296263809	PISTON	1	
12			O-RING	1	NSS
13		296263810	END PLUG	1	
14			O-RING	1	NSS
15			O-RING	1	NSS
16		296263807	CHECK VALVE	1	
17		296263801	SEAL KIT	1	INCLUDES REF. 5,10,12,14,15
18		296263800	MEASURING VALVE	1	INCLUDES ALL ITEMS IN FIG.

https://truckmanualshub.com/

Measuring Valve Components Fig 14-32r01

FIGURE DELETED DUE TO UPDATE

https://truckmanualshub.com/

Measuring Valve Components Fig 14-32r01

REF. NO.	*	PART NO.	DESCRIPTION	QTY.	REMARKS
		Revision Date	June, 2004		Deleted From Manual

https://truckmanualshub.com/

Measuring Valve Components Fig 14-32

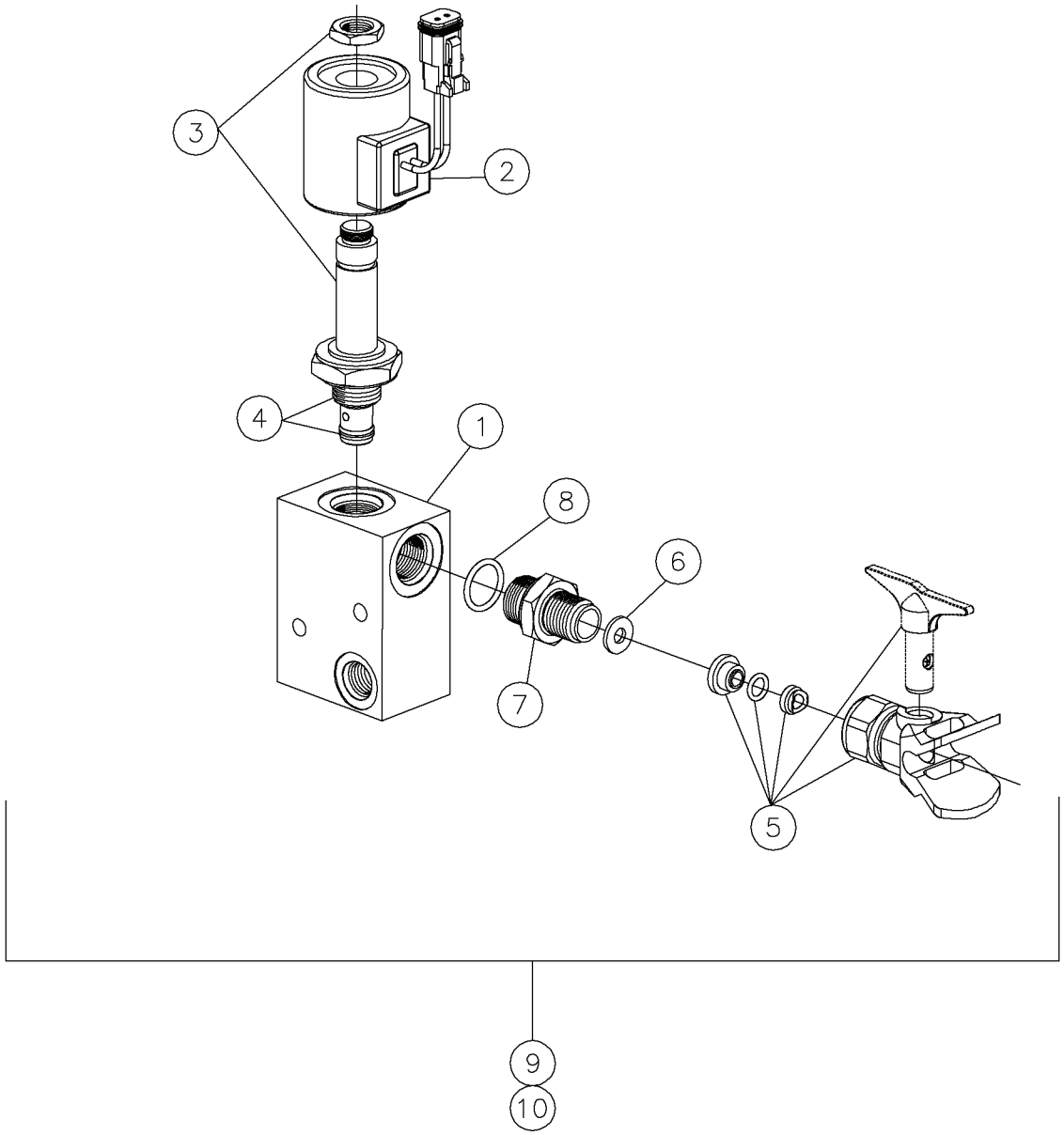

https://truckmanualshub.com/

Measuring Valve Components Fig 14-32

REF. NO.	*	PART NO.	DESCRIPTION	QTY.	REMARKS
1		296263797	SPRAY HEAD BODY	1	
2		296263795	SOLENOID COIL ASSY.	1	
3		296263796	SOLENOID VALVE	1	INCLUDES REF. 4
4		296263794	SOLENOID VALVE SEAL KIT	1	
5		296263799	ROTOCLEAN NOZZLE	1	
6			TIP GASKET	1	NSS
7		296263798	TIP ADAPTER	1	
8			O-RING	1	NSS
9		296263801	SEAL KIT	1	INCLUDES REF. 6,8
10		296263793	MEASURING VALVE	1	INCLUDES ALL ITEMS IN FIG.

https://truckmanualshub.com/

Grease Cylindered Components Fig 14-33

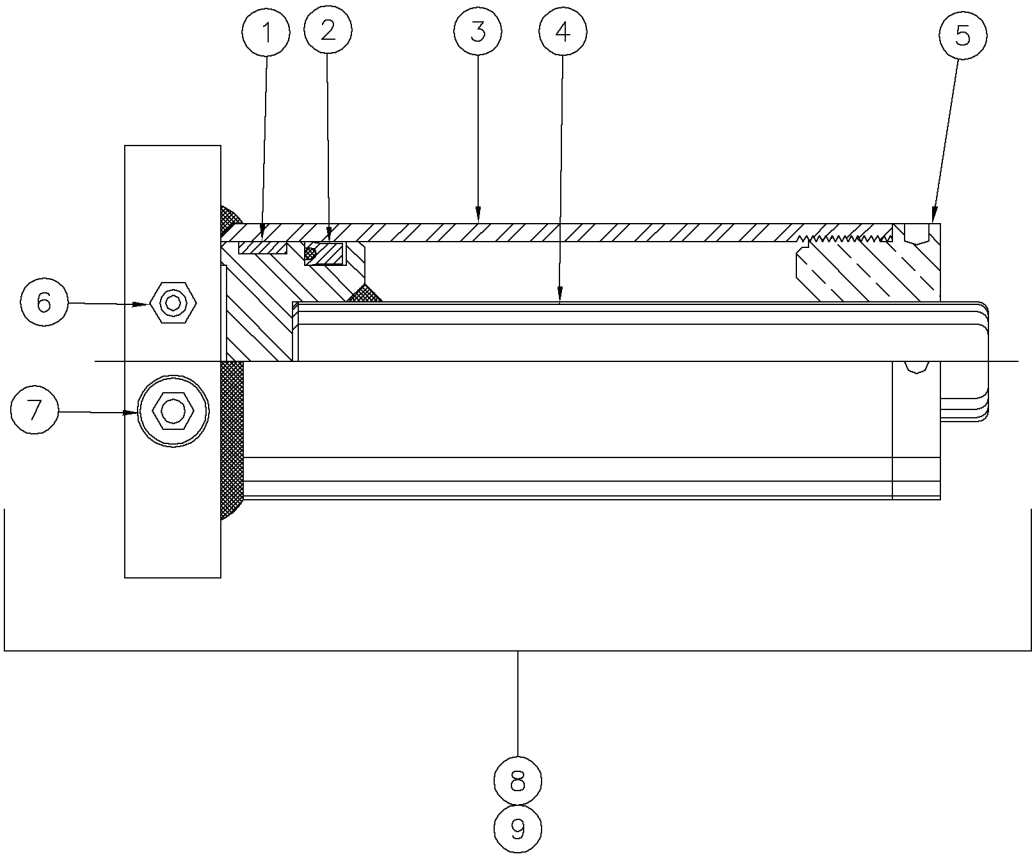

https://truckmanualshub.com/

Grease Cylindered Components Fig 14-33

REF. NO.	*	PART NO.	DESCRIPTION	QTY.	REMARKS
1		251097003	WEAR RING	1	
2		251097005	POLYPAK	1	
3		251097007	JACKET ASSEMBLY	1	
4		251097009	PISTON ROD (INCL. PISTON)	1	
5		251097011	GLAND NUT	1	
6		586001	ZERK-1/8” ST NPT GREASE	1	
7		251097013	CHECK VALVE	1	
8		251097015	SEAL KIT	1	(INC REF 1 & 2)
9		251097001	CYLINDER - 2.50 X 4.50 GREASE	1	(INC ALL ITEMS IN THIS FIGURE)

https://truckmanualshub.com/

Hydraulic Cylinder Components - 3.50 X 7.00 Fig 14-34

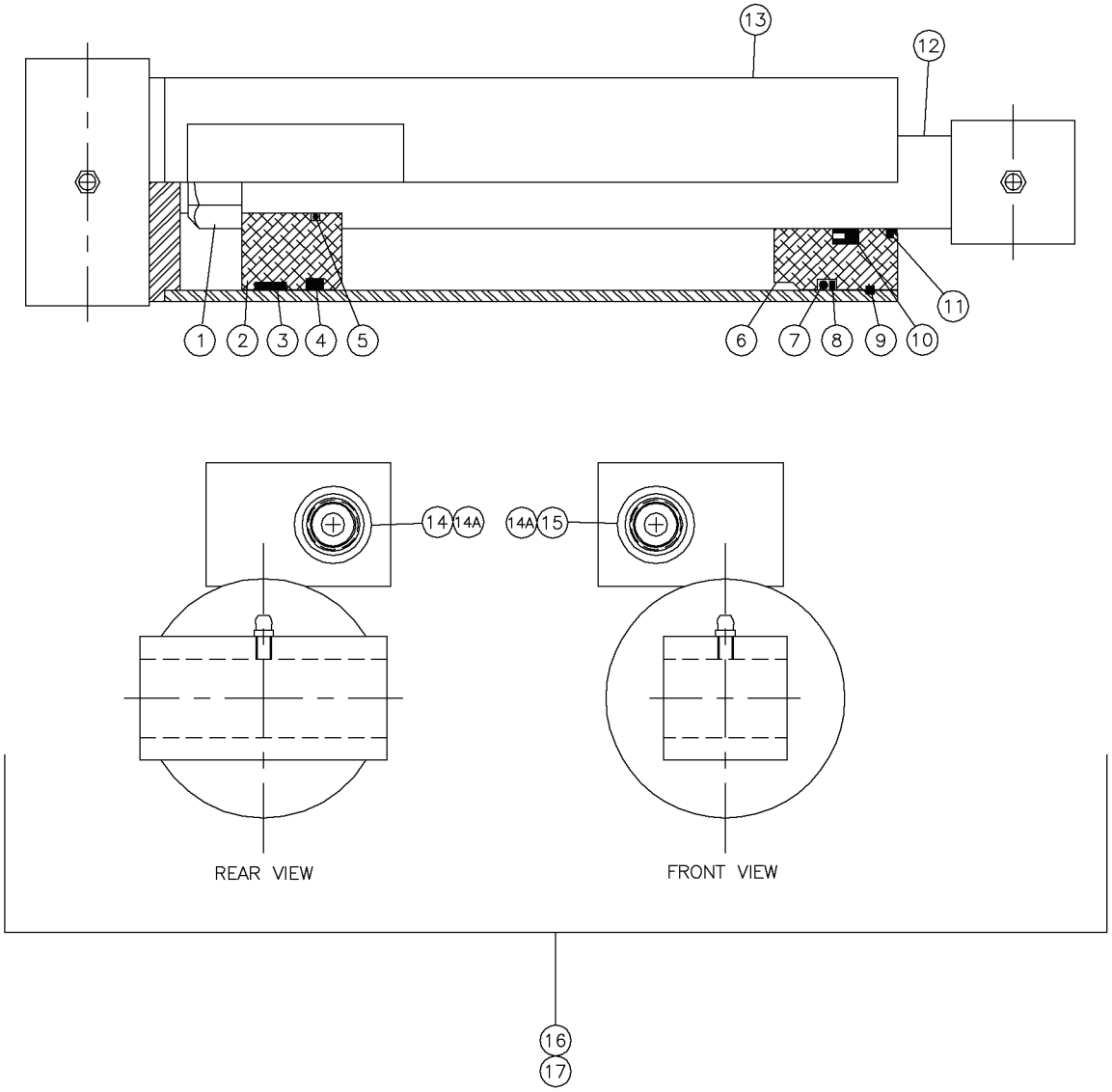

Hydraulic Cylinder Components - 3.50 X 7.00 Fig 14-34

REF. NO.	*	PART NO.	DESCRIPTION	QTY.	REMARKS
1		306011	NUT-1-14 SL PRINCE 220000210	1	
2		610291001	PISTON	1	
3		278769003	WEAR RING	1	
4		278769005	PSP SEAL	1	
5		278769007	O-RING	1	
6		278769009	HEAD	1	
7		278769011	O-RING	1	
8		278769013	BACKUP	1	
9		610292001	RETAINING RING	1	
10		236113021	POLYPAK	1	
11		236113023	DUST SEAL	1	
12		278769015	SHAFT W/ CLEVIS	1	
13		278769017	BARREL ASSEMBLY (W/O VALVE)	1	
14		278769019	VALVE	1	
14A		278769021	REPAIR KIT	2	
15		278769023	VALVE	1	
16		278769025	REPAIR KIT	1	(INC REF 3-5, 7, 8, 10, 11)
17		278769001	CYLINDER-3 1/2”BORE X 7”STROKE	1	(INC ALL ITEMS IN THIS FIGURE)

https://truckmanualshub.com/

Hydraulic Cylinder Components - 2.50 X 3.00 Fig 14-35

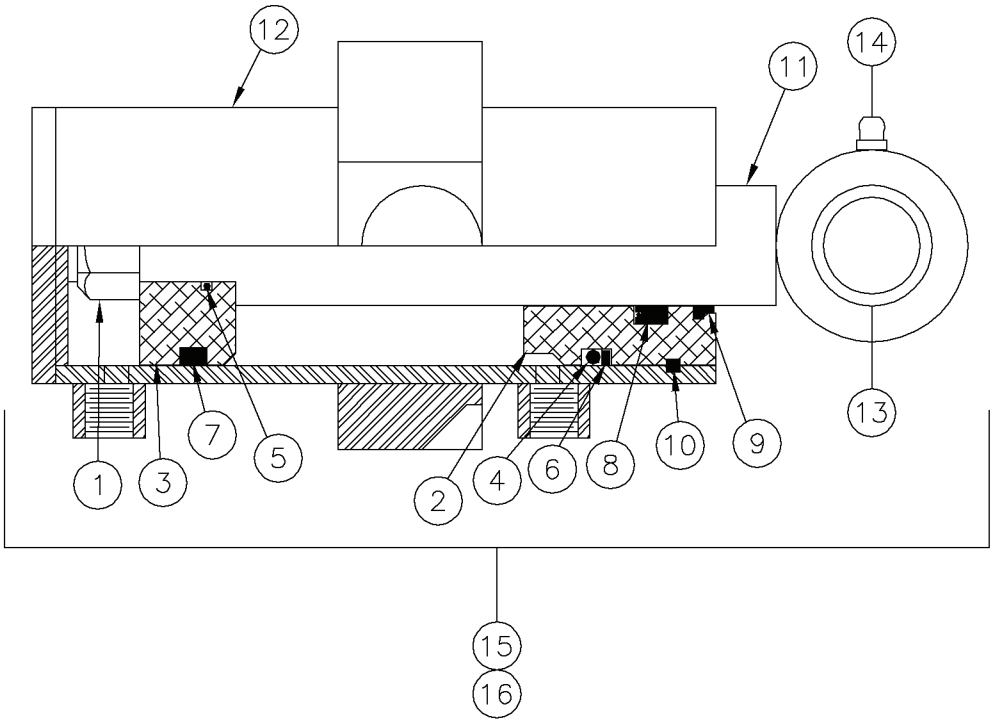

https://truckmanualshub.com/

Hydraulic Cylinder Components - 2.50 X 3.00 Fig 14-35

REF. NO.	*	PART NO.	DESCRIPTION	QTY.	REMARKS
1		241830003	NUT	1	
2		276260003	HEAD	1	
3		228165017	PISTON	1	
4		228165007	O-RING	1	
5		228165005	O-RING	1	
6		228165009	WASHER-BACK UP	1	
7		228165003	PSP SEAL	1	
8		228165013	POLYPAK SEAL	1	
9		228165015	DUST SEAL	1	
10		228165011	RING-RETAINING	1	
11		276260005	ROD - CYLINDER	1	(INC ONE OF REF 14 & TWO OF REF 13)
12		276260007	BODY - CYLINDER	1	
13		1835015	BSHG.-STL.-1 1/4 X 1 X 1	2	
14		598001	ZERK-1/4” NF ST GREASE	1	
15		228165023	SEAL KIT	1	(INC REF 4-9)
16		276260001	CYLINDER-2 1/2 X 3 3000 PSI	1	(INC ALL ITEMS IN FIGURE)

https://truckmanualshub.com/

Hydraulic Cylinder Components - 2.00 X 5.00 Fig 14-36

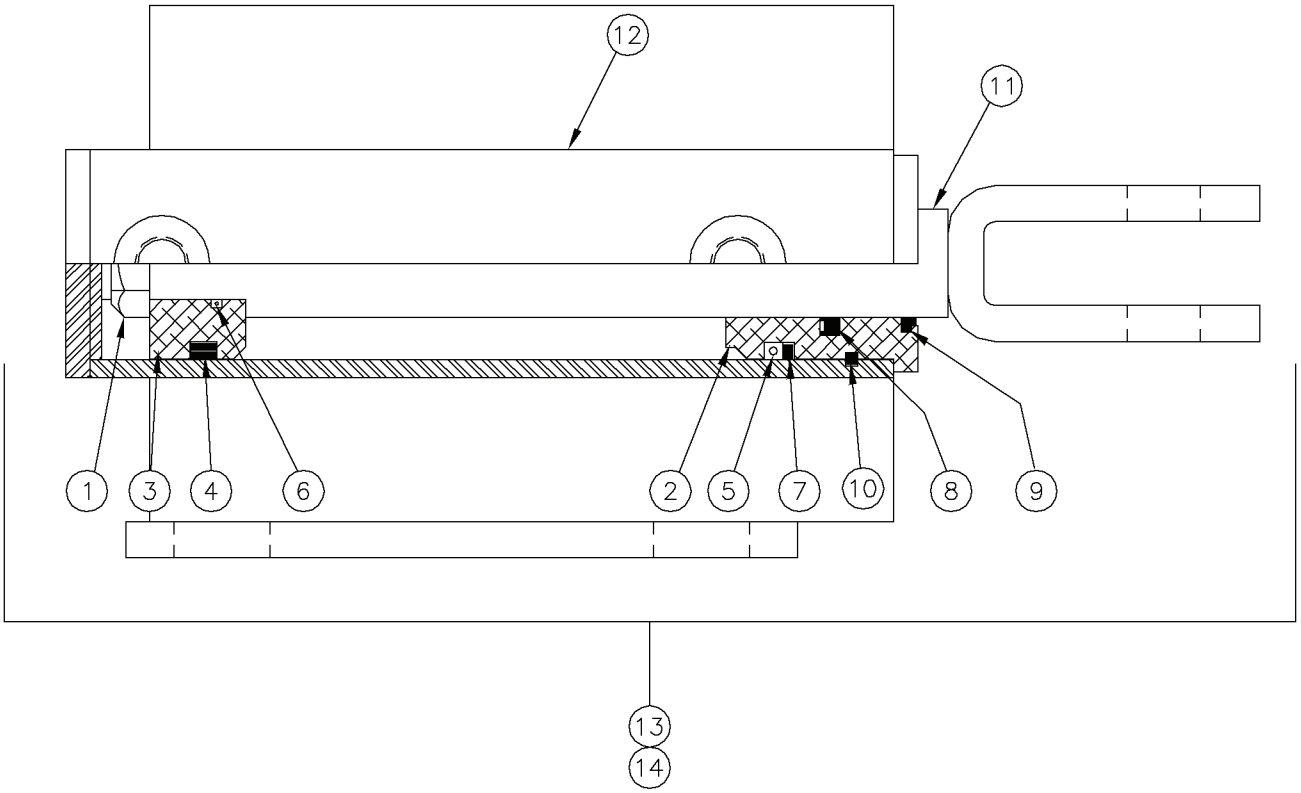

https://truckmanualshub.com/

Hydraulic Cylinder Components - 2.00 X 5.00 Fig 14-36

REF. NO.	*	PART NO.	DESCRIPTION	QTY.	REMARKS
1		230977003	NUT	1	
2		250494002	HEAD	1	
3		230977007	PISTON	1	
4		230977009	PSP-SEAL	1	
5		250494003	O-RING	1	
6		250494004	O-RING	1	
7		230977011	BACK-UP	1	
8		250494005	POLY PAK	1	
9		250494006	DUST SEAL	1	
10		250494007	RETAINING RING	1	
11		250494008	SHAFT - (W/ CLEVIS)	1	
12		250494009	BARREL (W/ CLEVIS & PORTS)	1	
13		250494010	REPAIR KIT	1	(INC REF 4-9)
14		250494001	CYLINDER - 2 X 5”	1	(INC ALL ITEMS IN THIS FIGURE)

https://truckmanualshub.com/

Hydraulic Cylinder Components - 4.00 X 7.00 Fig 14-37r01

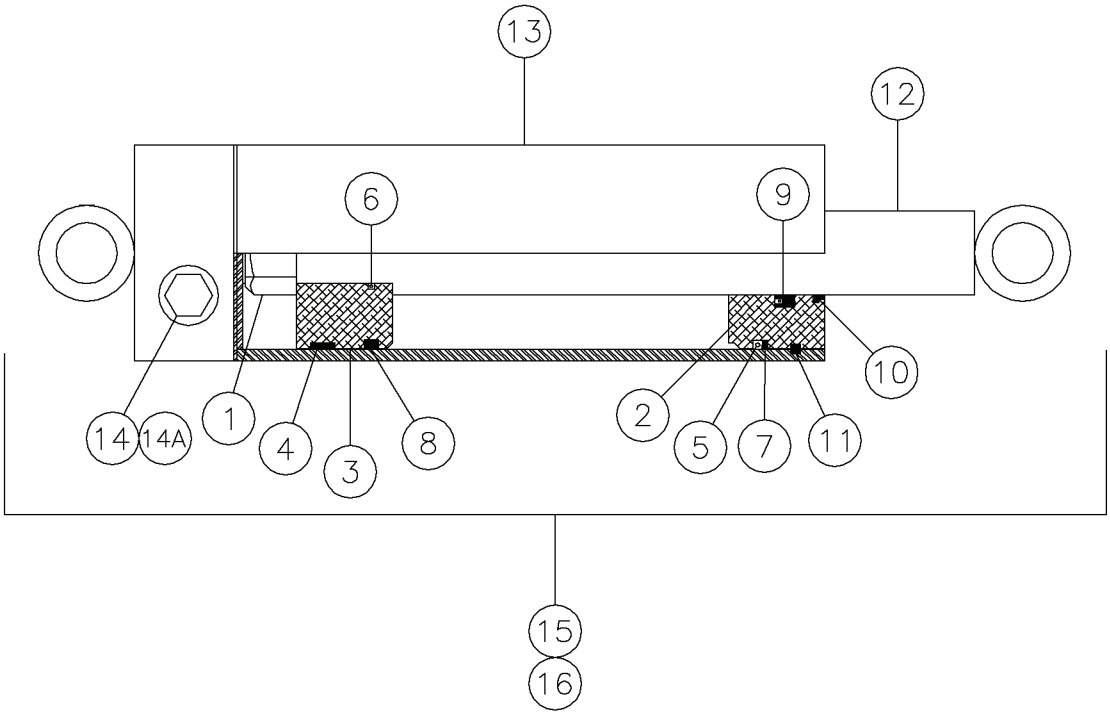

https://truckmanualshub.com/

Hydraulic Cylinder Components - 4.00 X 7.00 Fig 14-37r01

REF. NO.	*	PART NO.	DESCRIPTION	QTY.	REMARKS
		Revision Date	June, 2004		Update In Illustration & Parts List.
1		278954006	NUT	1	
2		278954005	HEAD - CYLINDER	1	
3		278954004	PISTON	1	
4		278954008	WEARING	1	
5		244286011	O-RING	1	
6		244286013	O-RING	1	
7		244286015	BACK - UP	1	
8		244286009	PSP SEAL	1	
9		278954009	POLY PACK	1	
10		278954010	DUST SEAL	1	
11		244286021	RETAINING RING	1	
12		278954003	SHAFT - (W/ CLEVIS)	1	
13		278954002	BARREL (W/ CLEVIS & PORTS	2	
14		278769019	VALVE	1	
14A		278769021	REPAIR KIT	1	
15		278954007	REPAIR KIT	1	(INC REF 4-10)
16		278954001	CYLINDER - 4 X 7 W/ PO CHECKS	1	(INC ALL ITEMS IN THIS FIG)

https://truckmanualshub.com/

Hydraulic Cylinder Components - 4.00 X 7.00 Fig 14-37

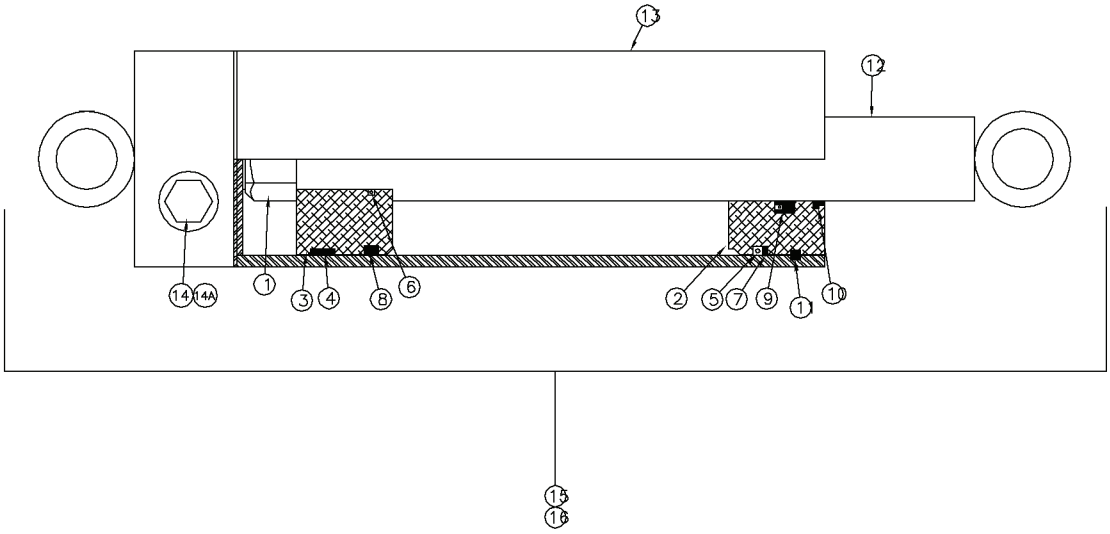

https://truckmanualshub.com/

Hydraulic Cylinder Components - 4.00 X 7.00 Fig 14-37

REF. NO.	*	PART NO.	DESCRIPTION	QTY.	REMARKS
1		278954006	NUT	1	
2		278954005	HEAD - CYLINDER	1	
3		578954004	PISTON	1	
4		278954008	WEAR RING	1	
5		244286011	O-RING	1	
6		244286013	O-RING	1	
7		244286015	BACK UP	1	
8		244286009	PSP SEAL	1	
9		278954009	POLY PACK	1	
10		278954010	DUST SEAL	1	
11		244286021	RETAINING RING	1	
12		278954003	SHAFT W/ CLEVIS	1	
13		278954002	BARREL W/ CLEVIS & PORTS	1	
14		278769019	VALVE	2	
14A		278769021	REPAIR KIT	1	
15		278954007	REPAIR KIT	1	(INC REF 4-10)
16		278954001	CYLINDER - 4 X 7 W/ PO CHECKS	1	(INC ALL ITEMS IN THIS FIGURE)

https://truckmanualshub.com/

Hydraulic Lock Cylinder Components Fig 14-38

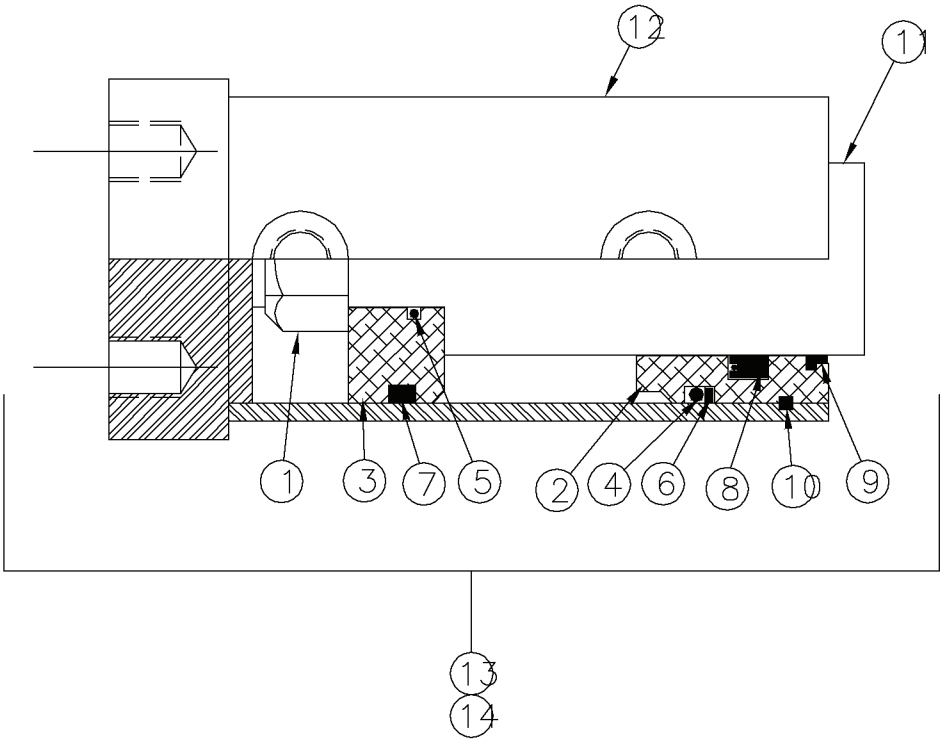

https://truckmanualshub.com/

Hydraulic Lock Cylinder Components Fig 14-38

REF. NO.	*	PART NO.	DESCRIPTION	QTY.	REMARKS
1		236113003	NUT	1	
2		278306002	HEAD - CYLINDER	1	
3		278306003	PISTON - CYLINDER	1	
4		278306007	O-RING	1	
5		278306011	O-RING	1	
6		236113017	BACKUP	1	
7		278306008	PSP SEAL	1	
8		278306009	POLYPACK	1	
9		278306010	DUST SEAL	1	
10		236113025	RETAINING RING	1	
11		278306004	SHAFT - CYLINDER	1	
12		278306005	BARREL W/ PORTS	1	
13		278306006	REPAIR KIT	1	(INC REF 4-9)
14		248306001	CYLINDER- LOCK	1	(INC ALL ITEMS IN THIS FIGURE)

https://truckmanualshub.com/

Hydraulic Cylinder Components - 1.50 X 24.00 Fig 14-39

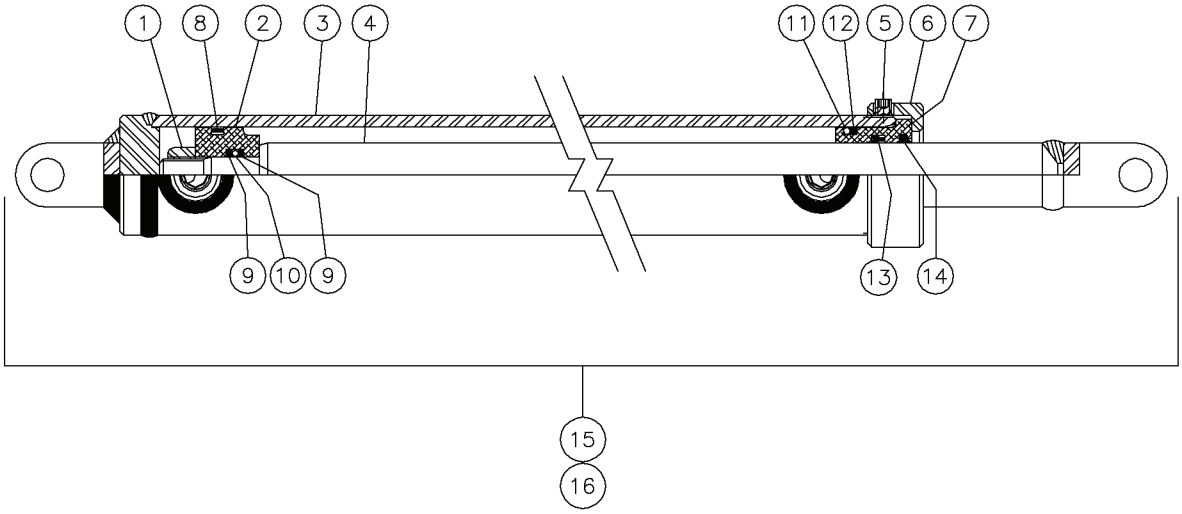

https://truckmanualshub.com/

Hydraulic Cylinder Components - 1.50 X 24.00 Fig 14-39

REF. NO.	*	PART NO.	DESCRIPTION	QTY.	REMARKS
1		202722001	LOCKNUT	1	
2		287588004	PISTON	1	
3		287588005	BARREL ASSEMBLY	1	
4		287588006	ROD ASSEMBLY	1	
5		223998013	SET SCREW	1	
6		287588007	THREAD CAP	1	
7		287588008	THREAD CAP HEAD	1	
8			PSP SEAL	1	NSS
9			BACKUP	2	NSS
10			O-RING	1	NSS
11			O-RING	1	NSS
12			BACKUP	1	NSS
13			LOADED V-CUP	1	NSS
14			ROD WIPER	1	NSS
15		287588002	SEAL KIT	1	(INC REF 8-14)
16		287588001	CYLINDER - 1-1/2 X 24	1	(INC ALL ITEMS IN FIGURE)

https://truckmanualshub.com/

Hydraulic Cylinder Components - 2.50 X 6.625 Fig 14-40

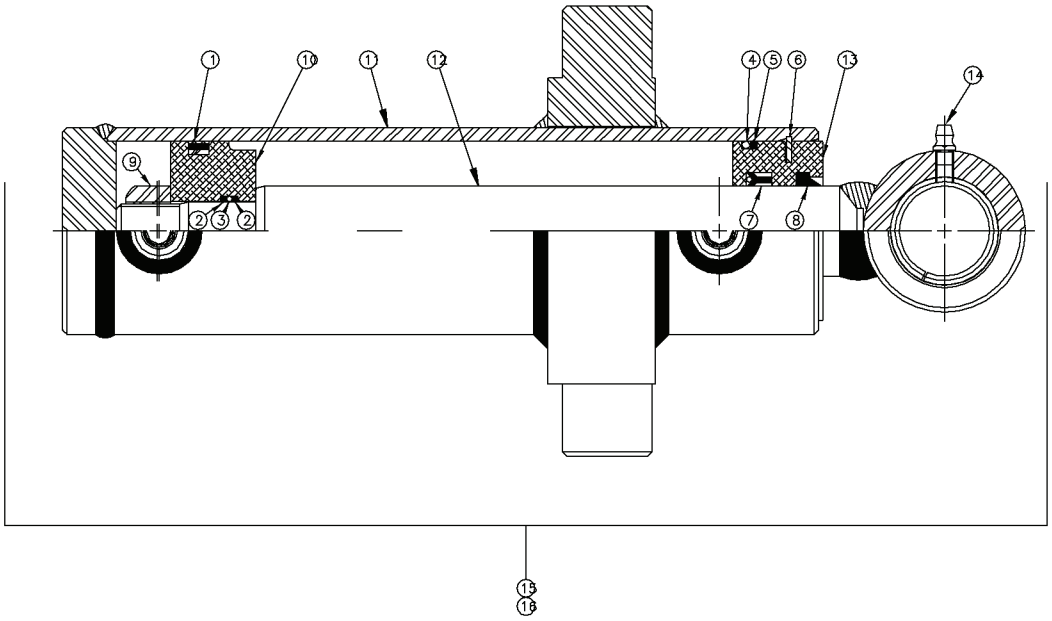

Hydraulic Cylinder Components - 2.50 X 6.625 Fig 14-40

REF. NO.	*	PART NO.	DESCRIPTION	QTY.	REMARKS
1			PSP SEAL	1	NSS
2			BACK-UP RING	2	NSS
3			O-RING	1	NSS
4			O-RING	1	NSS
5			BACK-UP RING	1	NSS
6			INTERNAL SNAP RING	1	NSS
7			LOADED U-CUP	1	NSS
8			ROD WIPER	1	NSS
9		95631011	LOCK NUT	1	
10		296253320	PISTON	1	
11		296253321	BARREL ASSEMBLY	1	
12		296253322	BARREL ASSEMBLY	1	
13		296253323	SNAP RING HEAD	1	
14		598001	ZERK-1/4” NF ST GREASE	2	
15		296253319	SEAL KIT	1	(INC REF 1-8)
16		287590001	CYLINDER - 2-1/2 X 6-5/8	1	(INC ALL ITEMS IN FIGURE)

https://truckmanualshub.com/

Hydraulic Cylinder Components - 1.00 X 3.50 Fig 14-41

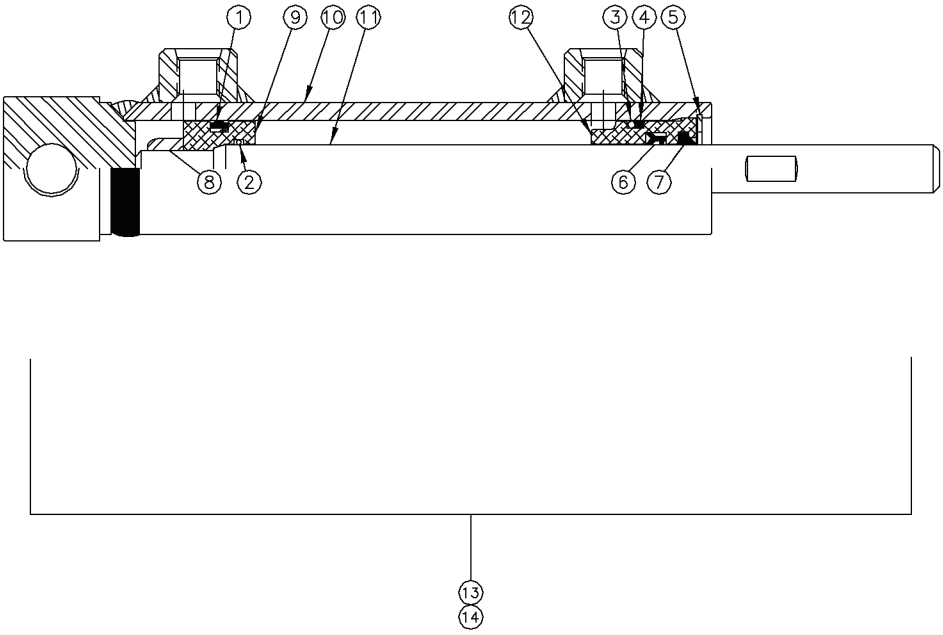

https://truckmanualshub.com/

Hydraulic Cylinder Components - 1.00 X 3.50 Fig 14-41

REF. NO.	*	PART NO.	DESCRIPTION	QTY.	REMARKS
1			PSP SEAL	1	NSS
2			O-RING	1	NSS
3			O-RING	1	NSS
4			BACK-UP RING	1	NSS
5			INTERNAL SNAP RING	1	NSS
6			DOUBLE LIP U-CUP	1	NSS
7			ROD WIPER	1	NSS
8		296251105	LOCK NUT	1	
9		296251106	PISTON	1	
10		296251107	BARREL ASSEMBLY	1	
11		296251108	ROD	1	
12		296251109	SNAP RING HEAD	1	
13		296251104	SEAL KIT	1	(INC REF 1-7)
14		287591001	CYLINDER - 1 X 3-1/2	1	(INC ALL ITEMS IN FIGURE)

https://truckmanualshub.com/

Hydraulic Cylinder Components - 1.00 X 9.75 Fig 14-42

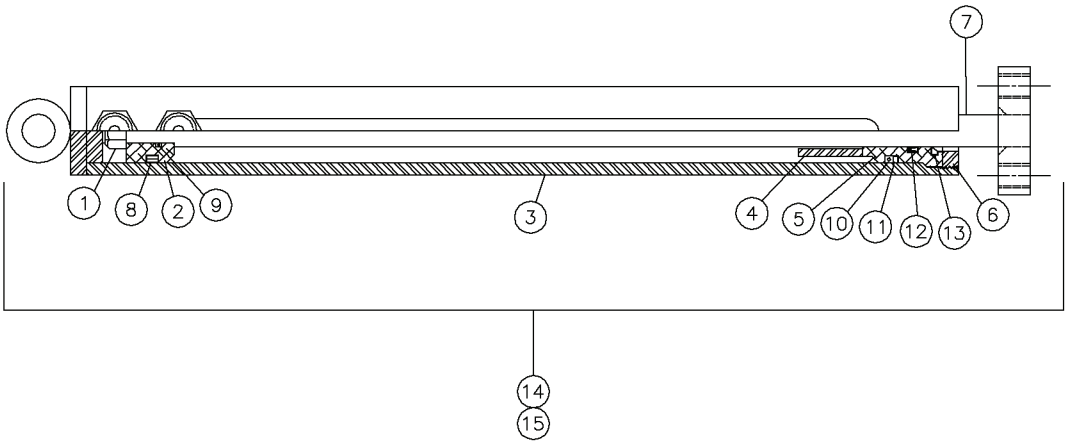

Hydraulic Cylinder Components - 1.00 X 9.75 Fig 14-42

REF. NO.	*	PART NO.	DESCRIPTION	QTY.	REMARKS
1		234359003	NUT	1	
2		296251772	PISTON	1	
3		296263814	BARREL WITH CLEVIS & PORTS	1	
4		296263812	SPACER	1	
5		234359007	HEAD	1	
6		234359013	COLLAR	1	
7		296263813	SHAFT WITH CLEVIS	1	
8			PSP-SEAL	1	NSS
9			O-RING	1	NSS
10			O-RING	1	NSS
11			BACKUP	1	NSS
12			ROD SEAL	1	NSS
13			DUST SEAL	1	NSS
14		296251775	SEAL KIT	1	INC. REF. 8-13
15		291558001	CYLINDER - 1” BORE X 9-3/4” STROKE HYDRAULIC	1	INCLUDES ALL ITEMS IN THIS FIG.

https://truckmanualshub.com/

Hydraulic Cylinder Components - 2.00 X 3.25 Fig 14-43

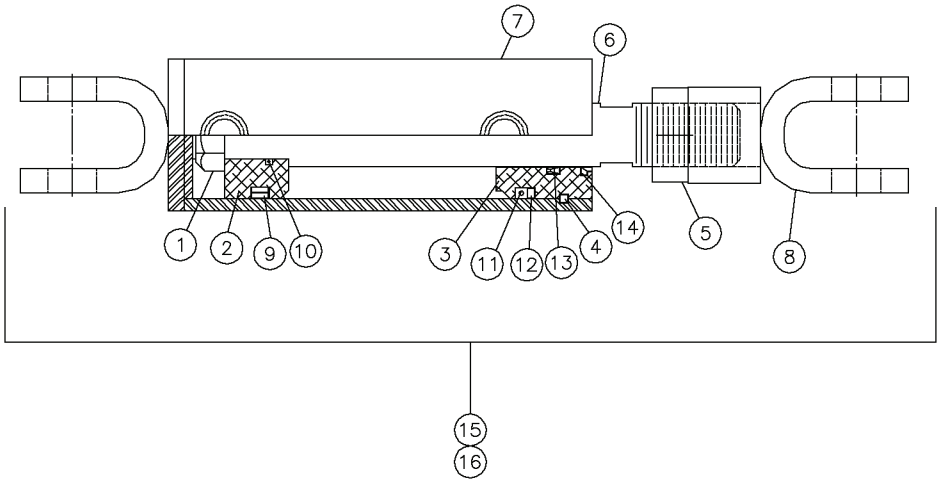

Hydraulic Cylinder Components - 2.00 X 3.25 Fig 14-43

REF. NO.	*	PART NO.	DESCRIPTION	QTY.	REMARKS
1		296251063	NUT	1	
2		230977007	PISTON	1	
3		296251064	HEAD	1	
4		249175009	REATAINING RING	1	
5		296251062	NUT	1	
6		296263816	SHAFT	1	
7		296263817	BARREL WITH CLEVIS & PORTS	1	
8		296263815	SHAFT CLEVIS	1	
9			PSP-SEAL	1	NSS
10			O-RING	1	NSS
11			O-RING	1	NSS
12			BACKUP	1	NSS
13			ROD SEAL	1	NSS
14			DUST SEAL	1	NSS
15		296251068	REPAIR KIT	1	(INC. REF. 9-14)
16		291571001	CYLINDER - 2” BORE X 3 1/4” STROKE HYDRAULIC	1	(INC ALL ITEMS IN THIS FIGURE)

https://truckmanualshub.com/

Hydraulic Cylinder Components - 2.00 X 3.375 Fig 14-44

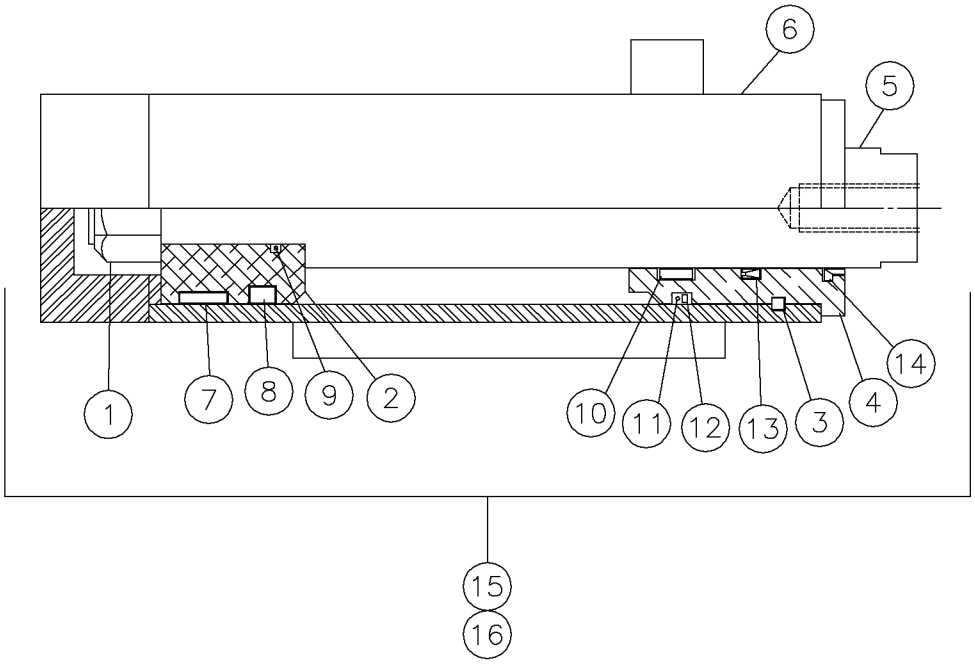

https://truckmanualshub.com/

Hydraulic Cylinder Components - 2.00 X 3.375 Fig 14-44

REF. NO.	*	PART NO.	DESCRIPTION	QTY.	REMARKS
1		296263824	NUT	1	
2		296263826	PISTON	1	
3		249175009	REATAINING RING	1	
4		296263825	HEAD	1	
5		296263828	SHAFT	1	
6		296263829	BARREL WITH CLEVIS & PORTS	1	
7			O-RING	1	NSS
8			PSP-SEAL	1	NSS
9			O-RING	1	NSS
10			O-RING	1	NSS
11			O-RING	1	NSS
12			BACKUP	1	NSS
13			ROD SEAL	1	NSS
14			DUST SEAL	1	NSS
15		296263830	REPAIR KIT	1	(INC REF 7-14)
16		291638001	CYLINDER - 2”BORE X 3 3/8” STROKE HYDRAULIC	1	(INC ALL ITEMS IN THIS FIGURE)

https://truckmanualshub.com/

Hydraulic Cylinder Components - 1.50 X 11.50 Fig 14-45

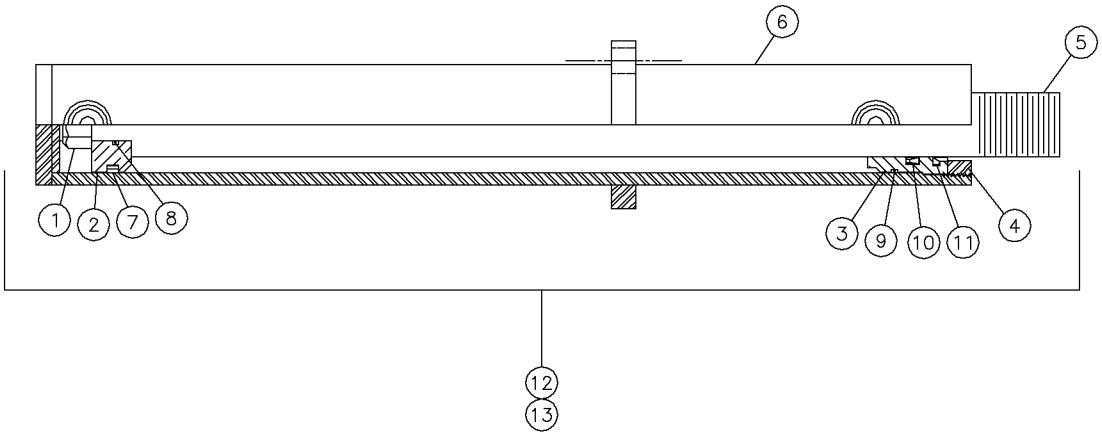

Hydraulic Cylinder Components - 1.50 X 11.50 Fig 14-45

REF. NO.	*	PART NO.	DESCRIPTION	QTY.	REMARKS
1		230958009	NUT	1	
2		296263819	PISTON	1	
3		296263818	HEAD	1	
4		296263820	COLLAR	1	
5		296263821	SHAFT	1	
6		296263822	BARREL WITH CLEVIS & PORTS	1	
7			PSP-SEAL	1	NSS
8			O-RING	1	NSS
9			O-RING	1	NSS
10			ROD SEAL	1	NSS
11			DUST SEAL	1	NSS
12		296263823	REPAIR KIT	1	(INC REF 7-11)
13		291688001	CYLINDER - 1 1/2” BORE X 11 1/2” STROKE	1	(INC ALL ITEMS IN THIS FIGURE)

https://truckmanualshub.com/

Hydraulic Cylinder Components - 2.00 X 15.00 Fig 14-46

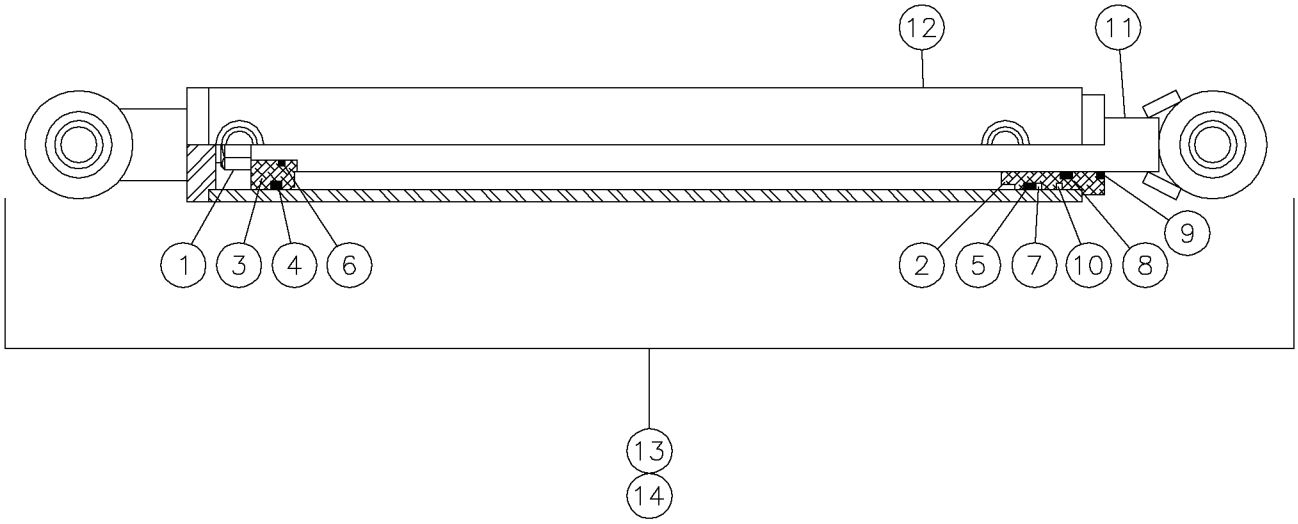

https://truckmanualshub.com/

Hydraulic Cylinder Components - 2.00 X 15.00 Fig 14-46

REF. NO.	*	PART NO.	DESCRIPTION	QTY.	REMARKS
1		230977003	NUT	1	
2		230977005	HEAD	1	
3		230977007	PISTON	1	
4		230977009	PSP-SEAL	1	
5		51181001	O-RING #326	1	
6		792029	O-RING	1	
7		230977011	BACK-UP	1	
8		230977013	ROD SEAL	1	
9		230977015	DUST SEAL	1	
10		230977017	RETAINING RING1	1	
11		230977019	SHAFT (W/CLEVIS)	1	
12		230977021	BARREL (W/CLEVIS AND PORTS)	1	
13		230977023	REPAIR KIT	1	(INC REF 4-10)
14		230977001	CYLINDER-2”X15"	1	(INC REF 1-12)

https://truckmanualshub.com/

Air Cleaner Components Fig 14-47

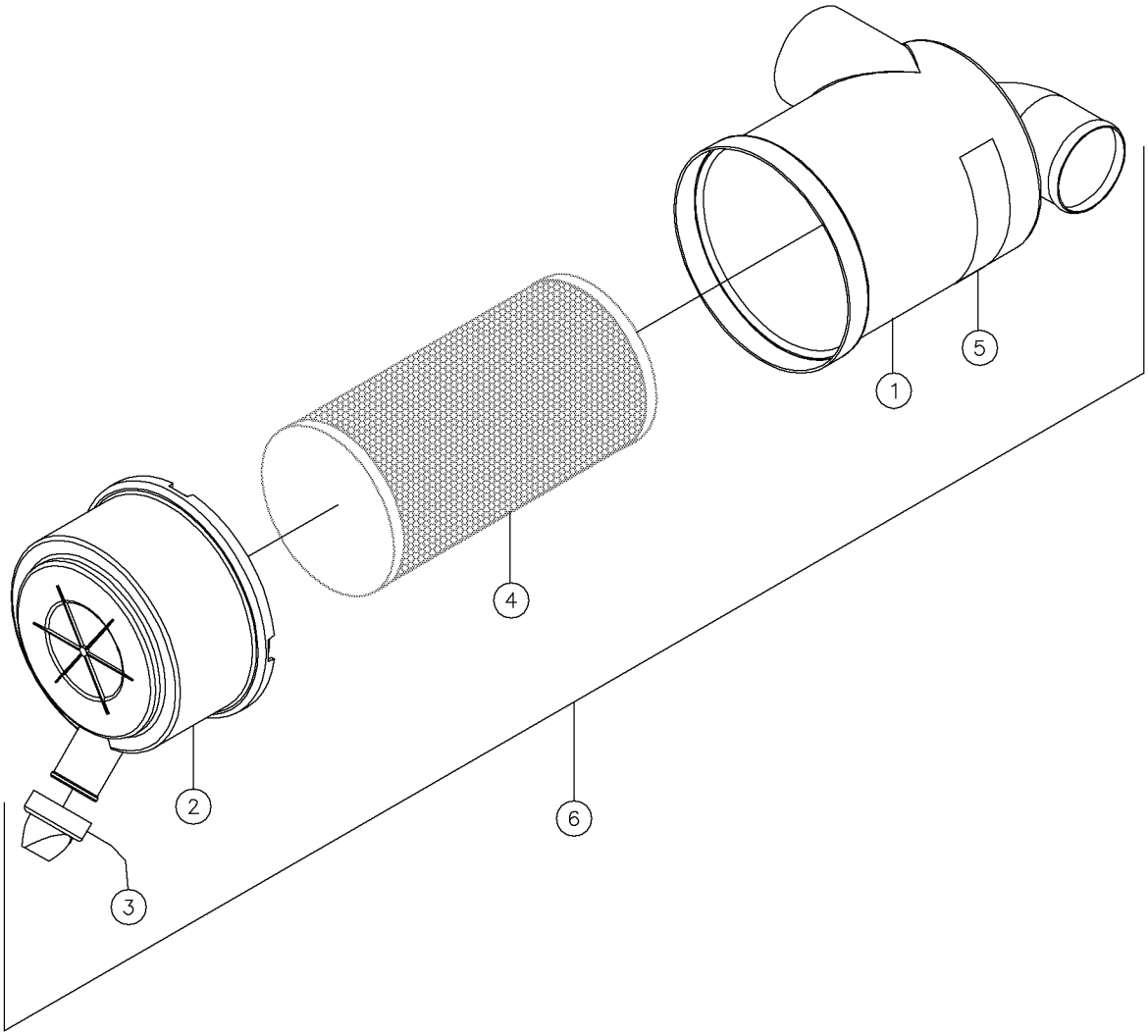

https://truckmanualshub.com/

Air Cleaner Components Fig 14-47

REF. NO.	*	PART NO.	DESCRIPTION	QTY.	REMARKS
1		224847003	BODY ASSEMBLY	1	
2		220166007	COVER ASSEMBLY	1	
3		220166009	VALVE	1	
4		220166005	ELEMENT ASSEMBLY	1	
5		224847005	DECAL-INSTRUCTION	1	
6		224847001	AIR CLEANER	1	(INC ALL ITEMS IN THIS FIGURE)

https://truckmanualshub.com/

Hose Carrier Components (10' Rack) Fig 14-48r01

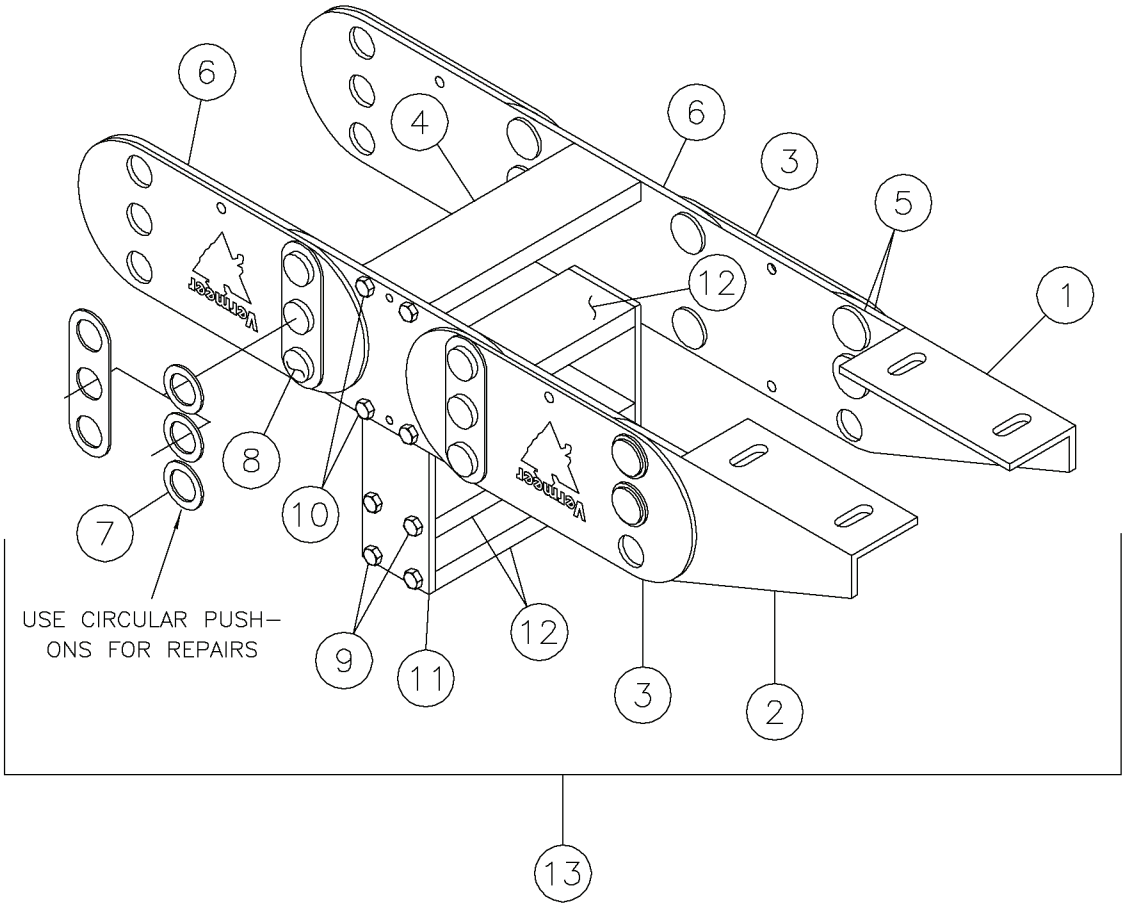

https://truckmanualshub.com/

Hose Carrier Components (10' Rack) Fig 14-48r01

REF. NO.	*	PART NO.	DESCRIPTION	QTY.	REMARKS
		Revision Date	July, 2004		Update In Illustration & Parts List.
1		234256003	PT45E MOUNTING BRACKET ASSY(L)	2	
2		234256005	PT45E MOUNTING BRACKET ASSY(R)	2	
3		234256007	PT45E OUTER LINK W/VERMEERLOGO	52	
4		276280011	PT45E ALUM CHANNEL 5.625”	15	
5		234256011	PT45E ANTI-FRICTION DISC	106	
6		276280003	PT45E INNER LINK R13.39	52	
7		234256015	PT45E CIRCULAR PUSH-ON	150	
8		234256017	PT45E HINGE PIN-PUSH ON FASTNR	150	
9		215252017	SCREW-WHIZ LOCK	148	
10		276280005	SCREW-WHIZ LOCK 10-32 X .62	44	
11		276280007	BRACKET - PT45E CARRIER	22	
12		276280009	PT45E ALUM CHANNEL 5.375”	33	
13		294636001	TRACK - HOSE CARRIER 10’	1	(INC. ALL ITEMS IN THIS FIG.)

https://truckmanualshub.com/

Hose Carrier Components Fig 14-48

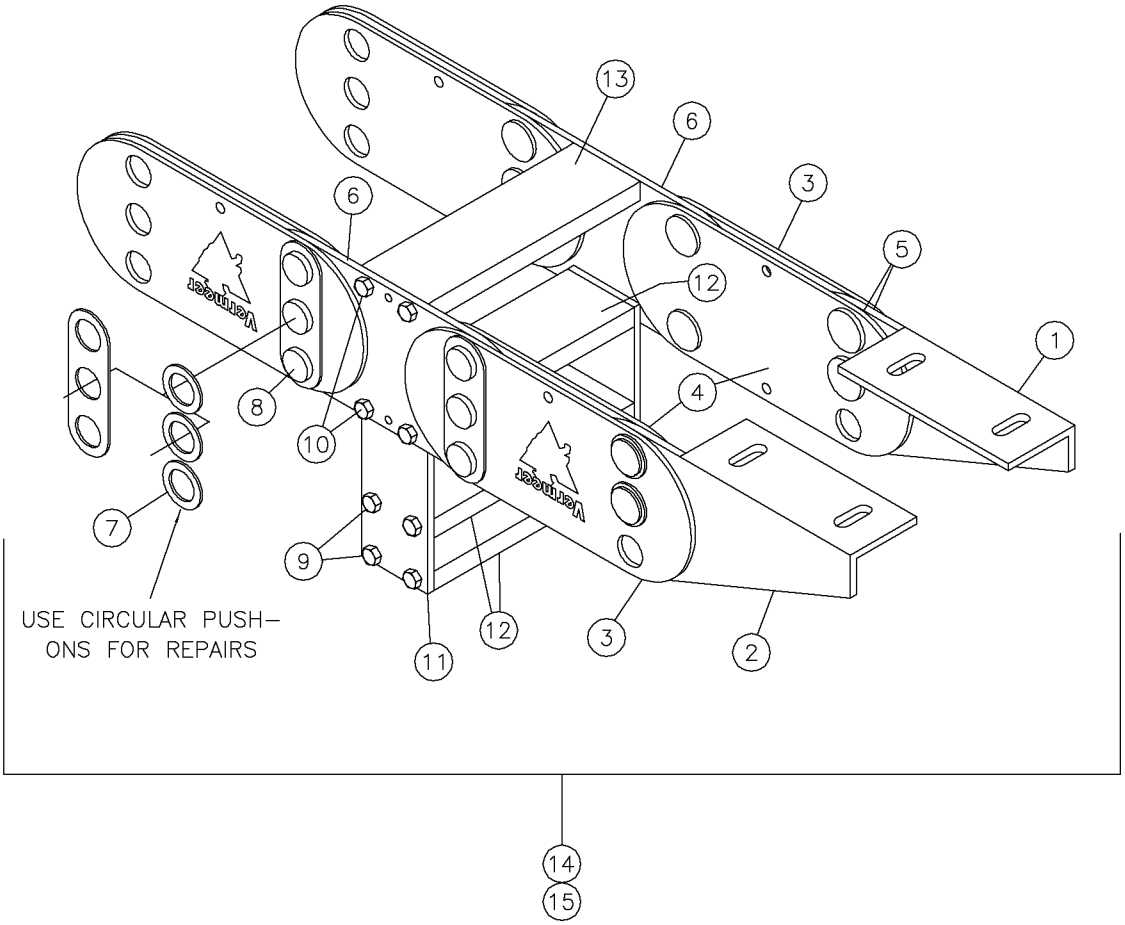

https://truckmanualshub.com/

Hose Carrier Components Fig 14-48

REF. NO.	*	PART NO.	DESCRIPTION	QTY.	REMARKS
1		234256003	PT45E MOUNTING BRACKET ASSY (L)	2	
2		234256005	PT45E MOUNTING BRACKET ASSY(R)	2	
3		234256007	PT45E OUTER LINK W/VERMEERLOGO	34	
4		234256009	PT45E OUTER LINK	34	
5		234256011	PT45E ANTI-FRICTION DISC	138	
6		276280003	PT45E INNER LINK R13.39	68	
7		234256015	PT45E CIRCULAR PUSH-ON	198	
8		234256017	PT45E HINGE PIN-PUSH ON FASTNER	198	
9		215252017	SCREW-WHIZ LOCK	204	
10		276280005	SCREW - WHIZ LOCK 10-32 X .62	68	
11		276280007	BRACKET - PT45E CARRIER	34	
12		276280009	PT45E ALUM CHANNEL 5.375”	51	
13		276280011	PT45E ALUM CHANNEL 5.625”	17	
14		276280001	TRACK - HOSE CARRIER 15’	1	INC ALL ITEMS IN THIS FIG.
15		294636001	TRACK - HOSE CARRIER 10’	0	INC ALL ITEMS IN THIS FIG.

https://truckmanualshub.com/

Rotation Control Handle Components (Left) Fig 14-49

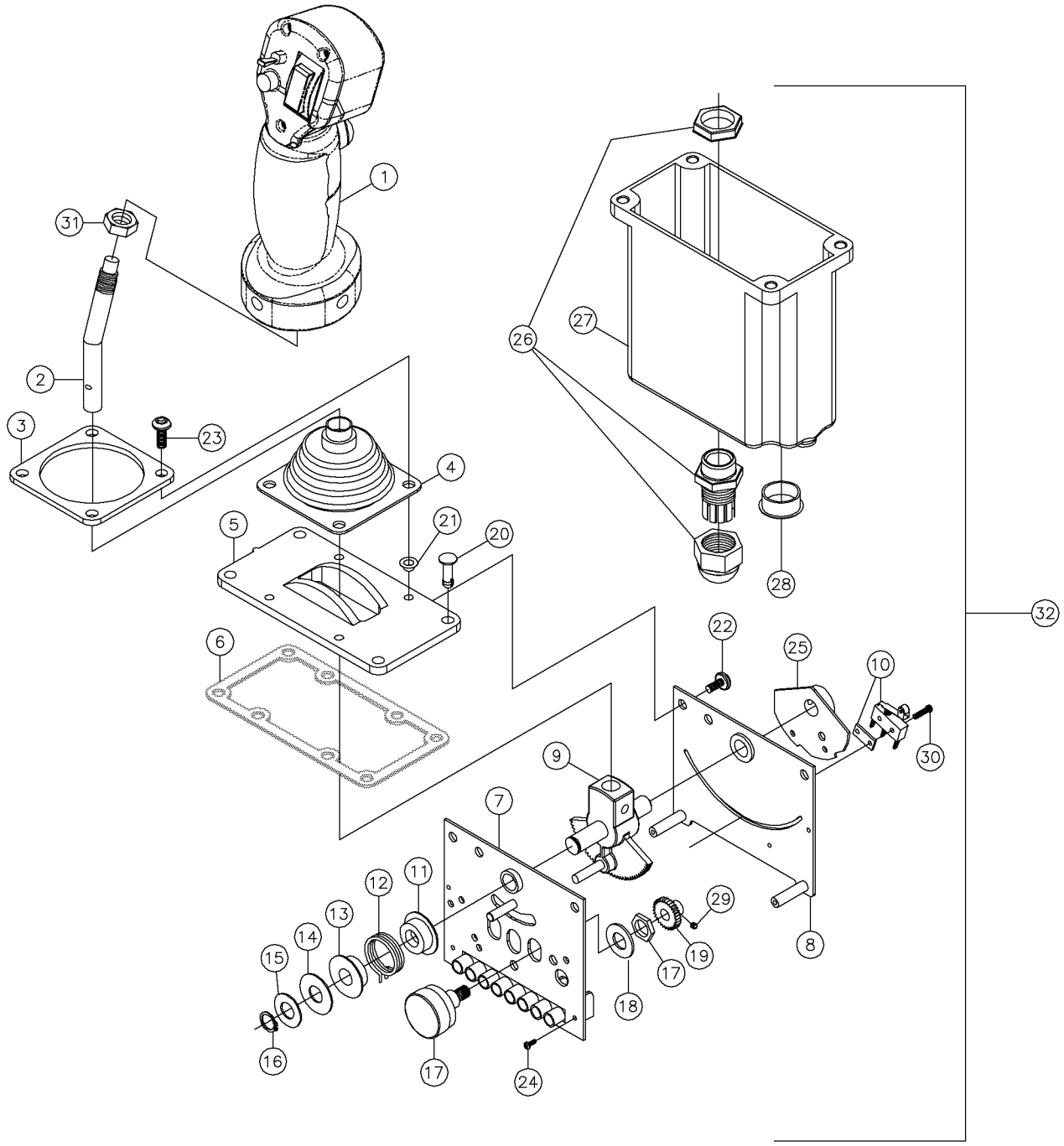

Rotation Control Handle Components (Left) Fig 14-49

REF. NO.	*	PART NO.	DESCRIPTION	QTY.	REMARKS
1		277746001	JOYSTICK GRIP - LEFT HAND (ROTATION)	1	(BREAKDOWN FIG 14-52)
2		119701013	LEVER - BENT	1	
3		204734003	COVER	1	
4		119701009	BOOT	1	
5		119701007	COVER	1	
6		67723001	GASKET- #12000073-002	1	
7		224294027	POTENTIOMETER PLATE ASSEMBLY	1	
8		234876005	SWITCH PLATE ASSY	1	
9		119701015	LEVER MECHANISM	1	
10		234876007	SWITCH-MICRO SUB MIN.	2	
11		224294021	BUSHING-INNER (PLASTIC)	1	
12		96070005	SPRING	1	
13		224294019	BUSHING-OUTER (PLASTIC)	1	
14		224294017	WASHER-FLAT (NYLON)	1	
15		224294015	WASHER-FLAT	1	
16		224294023	RETAINER RING	1	
17		234876009	POTENTIOMETER	1	
18		224294015	WASHER-FLAT	1	
19		96070011	GEAR-SPUR	1	
20		67712001	BUTTON- #12000387-001	4	
21		67707001	BUSHING	4	
22		103733005	SCREW	4	
23		67708001	SCREW	4	
24		224924029	SCREW-PAN HEAD	2	
25		224294009	CAM ASSEMBLY	1	
26		69892005	CONNECTOR- # 12000072-002	2	
27		67724001	CASE- #12000359-001	1	
28		277655003	PLUG - CASE	1	
29		103733003	SET SCREW	1	
30		234876003	SCREW-2-56X9/16	4	
31		250576001	NUT-3/8 NC HEX JAM W/Y-ZINC	1	
32		277745001	JOYSTICK - LEFT CONTROLLER	1	(INC REF 2-31)

https://truckmanualshub.com/

Rotation Control Handle Components (Right) Fig 14-50

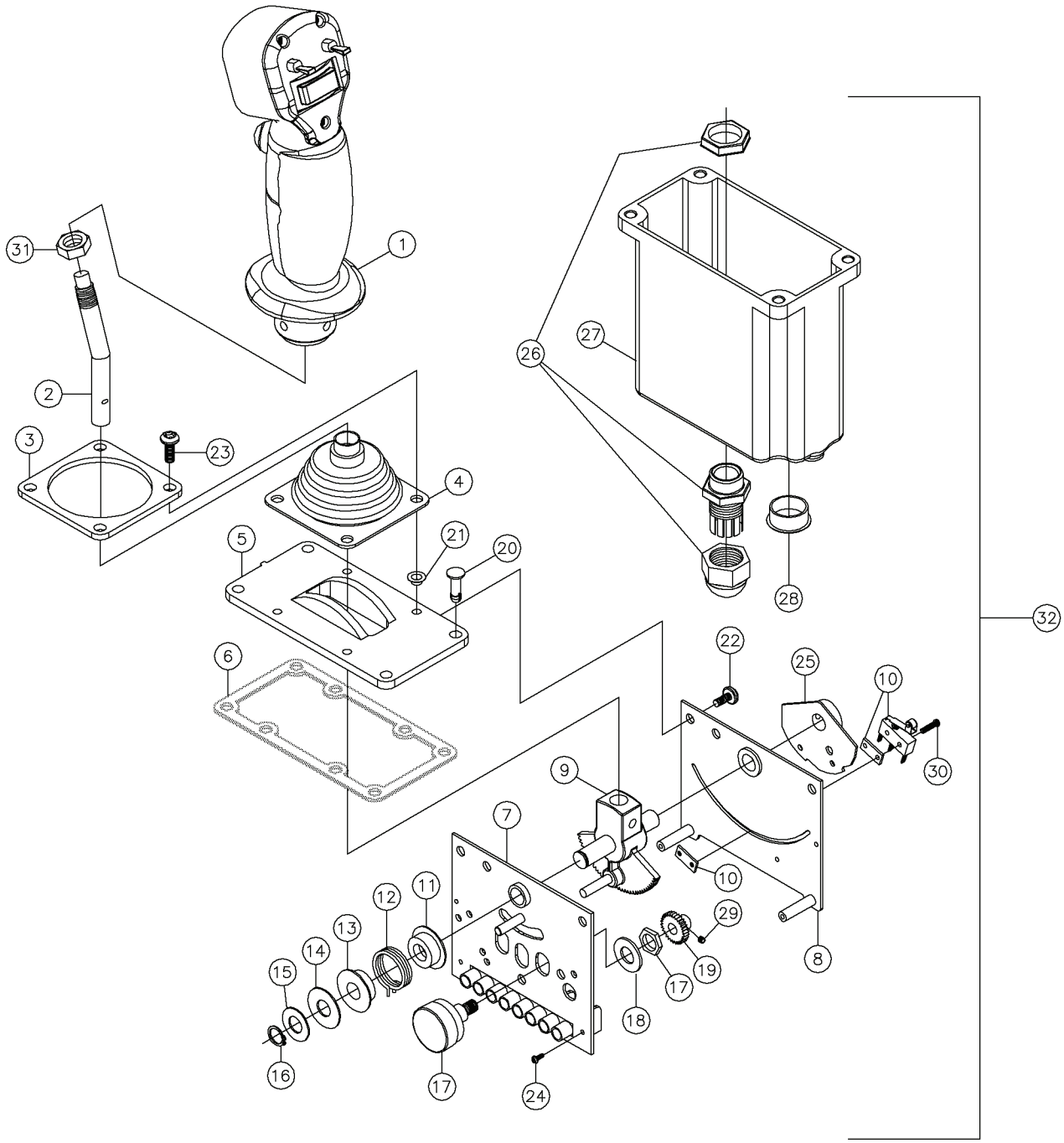

Rotation Control Handle Components (Right) Fig 14-50

REF. NO.	*	PART NO.	DESCRIPTION	QTY.	REMARKS
1		277614001	JOYSTICK GRIP -RIGHT HAND	1	(BREAKDOWN FIG 14-51)
2		119701013	LEVER - BENT	1	
3		204734003	COVER	1	
4		119701009	BOOT	1	
5		119701007	COVER	1	
6		67723001	GASKET- #12000073-002	1	
7		224294027	POTENTIOMETER PLATE ASSEMBLY	1	
8		234876005	SWITCH PLATE ASSY	1	
9		119701015	LEVER MECHANISM	1	
10		234876007	SWITCH-MICRO SUB MIN.	2	
11		224294021	BUSHING-INNER (PLASTIC)	1	
12		96070005	SPRING	1	
13		224294019	BUSHING-OUTER (PLASTIC)	1	
14		224294017	WASHER-FLAT (NYLON)	1	
15		224294015	WASHER-FLAT	1	
16		224294023	RETAINER RING	1	
17		234876009	POTENTIOMETER	1	
18		224294015	WASHER-FLAT	1	
19		96070011	GEAR-SPUR	1	
20		67712001	BUTTON- #12000387-001	4	
21		67707001	BUSHING	4	
22		103733005	SCREW	4	
23		67708001	SCREW	4	
24		224924029	SCREW-PAN HEAD	2	
25		224294009	CAM ASSEMBLY	1	
26		69892005	CONNECTOR- # 12000072-002	2	
27		67724001	CASE- #12000359-001	1	
28		277655003	PLUG - CASE	1	
29		103733003	SET SCREW	1	
30		234876003	SCREW-2-56X9/16	4	
31		250576001	NUT-3/8 NC HEX JAM W/Y-ZINC	1	
32		277744001	JOYSTICK - RIGHT CONTROLLER	1	(INC REF 2-31)

https://truckmanualshub.com/

Rotation Control Grip Components (Right) Fig 14-51r01

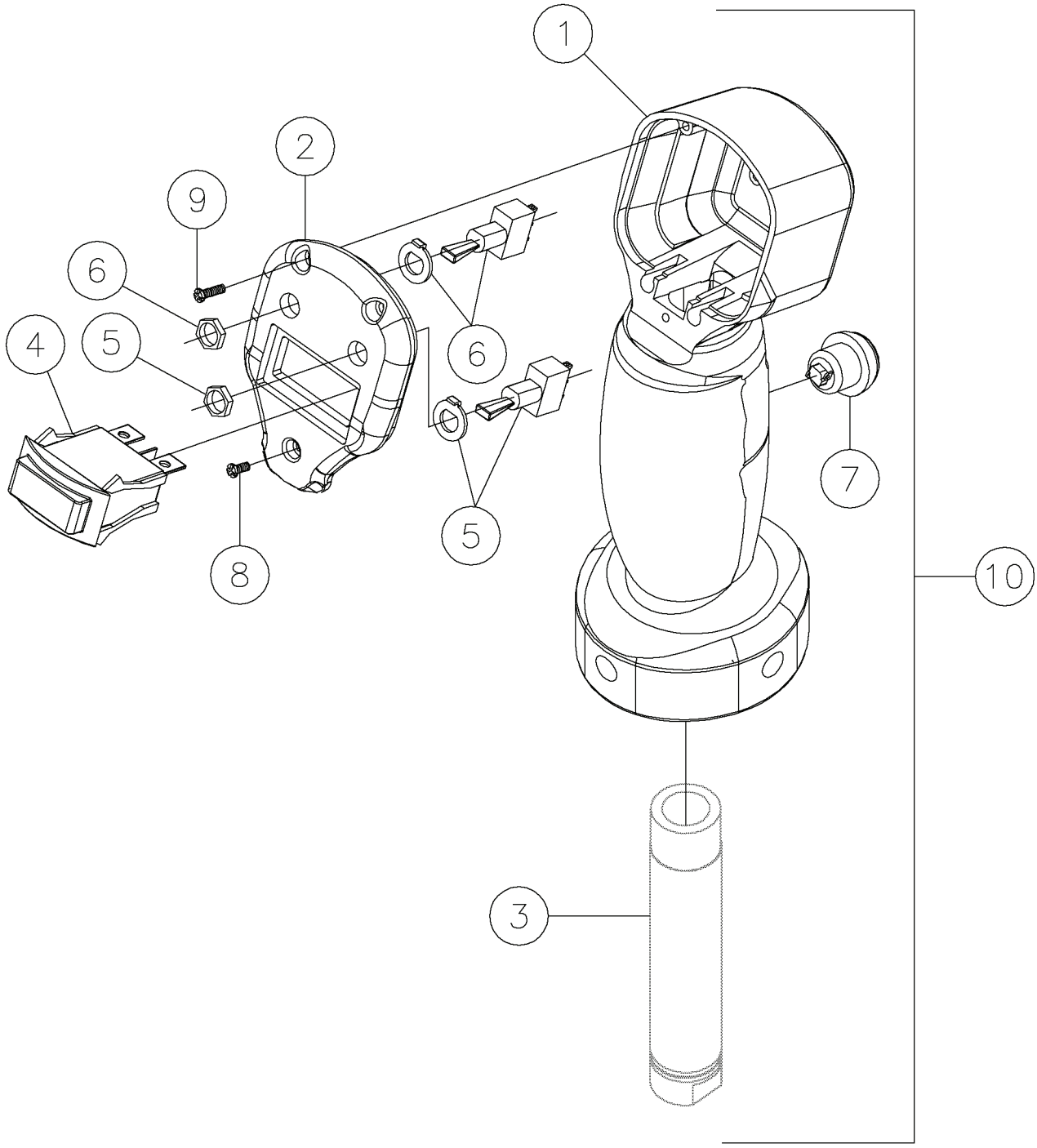

https://truckmanualshub.com/

Rotation Control Grip Components (Right) Fig 14-51r01

REF. NO.	*	PART NO.	DESCRIPTION	QTY.	REMARKS
		Revision Date	June, 2004		Update In Illustration & Parts List.
1		277614003	BODY - RIGHT HAND GRIP	1	
2		277614005	FACEPLATE - RIGHT HAND GRIP	1	
3		277614002	ADAPTER ROD-3/8-16 INTERNAL THREADS	1	
4		277614006	ROCKER SWITCH ASSY - OFF/ON WATER	1	
5		277614008	SWITCH ASSY - TOGGLE ON/ON 3PDT LOWER VISE	1	
6		277614007	SWITCH ASSY - TOGGLE ON/ON SPST UPPER VISE	1	
7		277614004	SWITCH ASSY - RAISED DOME, RED MOMENTARY ACT.	1	
8		277614010	HI-LOW SCREW - SELF TAP #4 X 1/4”	1	
9		277614009	HI-LOW SCREW - SELF TAP #4X1/2”	2	
10		277614001	JOYSTICK GRIP -RIGHT HAND	1	(INC ALL ITEMS IN THIS FIG)

https://truckmanualshub.com/

Rotation Control Grip Components (Right) Fig 14-51

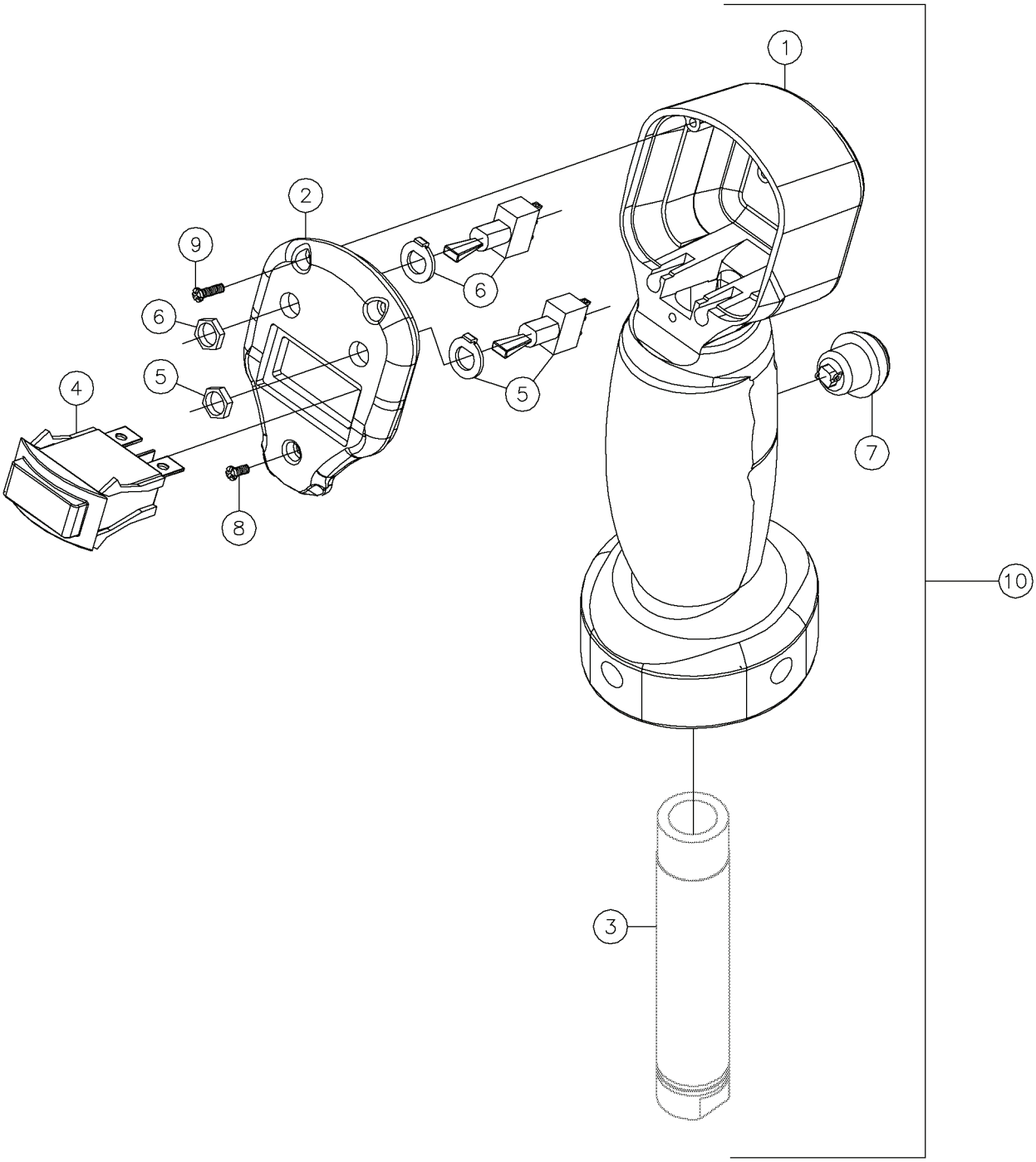

https://truckmanualshub.com/

Rotation Control Grip Components (Right) Fig 14-51

REF. NO.	*	PART NO.	DESCRIPTION	QTY.	REMARKS
1		277614003	BODY - RIGHT HAND GRIP	1	
2		277614005	FACEPLATE - RIGHT HAND GRIP	1	
3		277614002	ADAPTER ROD-3/8-16 INTERNAL THREADS	1	
4		277614006	ROCKER SWITCH ASSY - OFF/ON UPPER VISE ROT.	1	
5		277614008	SWITCH ASSY - TOGGLE ON/ON 3PDT LOWER VISE	1	
6		277614007	SWITCH ASSY - TOGGLE ON/ON SPST UPPER VISE	1	
7		277614004	SWITCH ASSY - RAISED DOME, RED MOMENTARY ACT.	1	
8		277614010	HI-LOW SCREW - SELF TAP #4 X 1/4”	1	
9		277614009	HI-LOW SCREW - SELF TAP #4X1/2”	2	
10		277614001	JOYSTICK GRIP -RIGHT HAND	1	(INC ALL ITEMS IN THIS FIGURE)

https://truckmanualshub.com/

Rotation Control Grip Components (Left) Fig 14-52r01

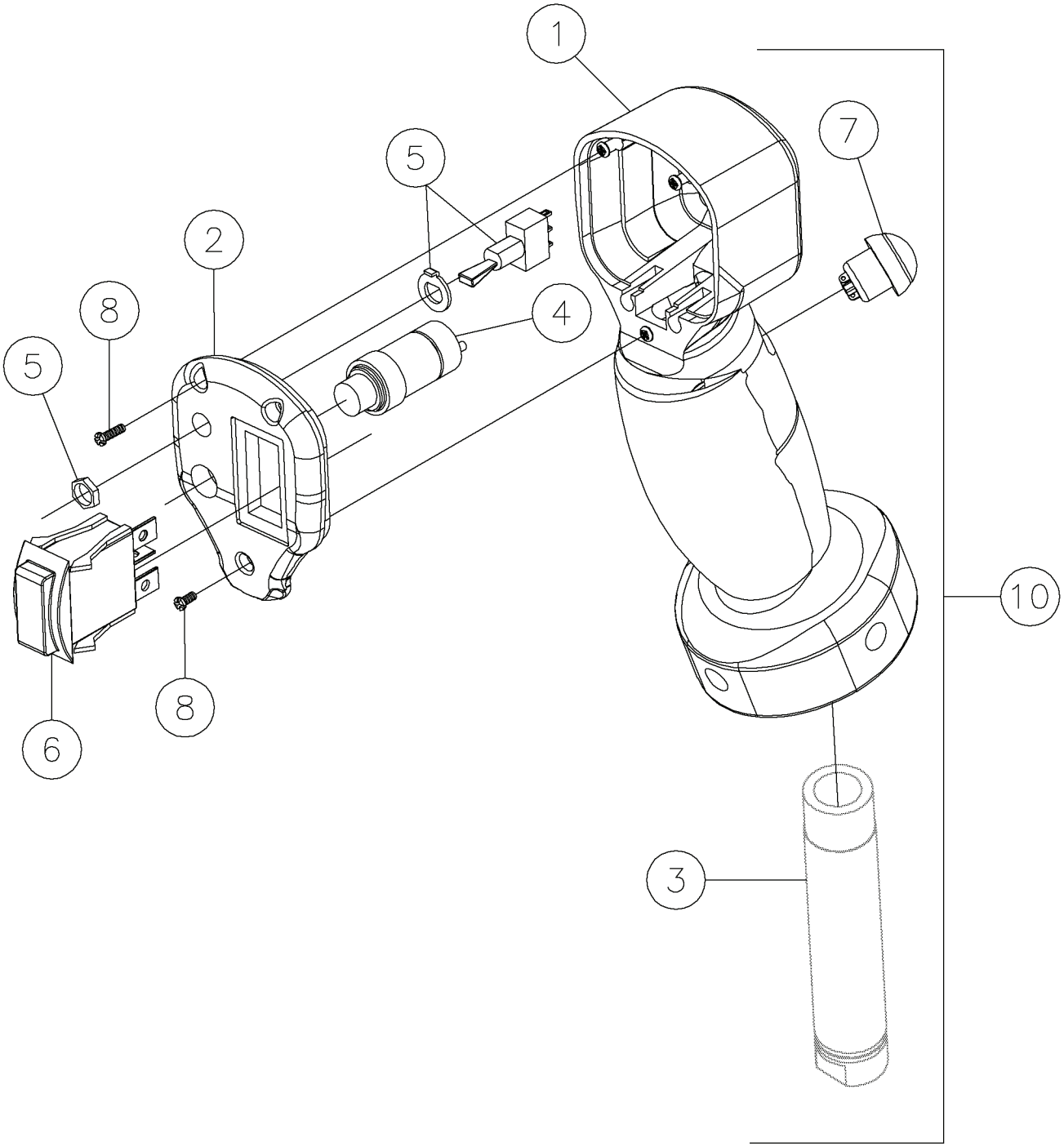

https://truckmanualshub.com/

Rotation Control Grip Components (Left) Fig 14-52r01

REF. NO.	*	PART NO.	DESCRIPTION	QTY.	REMARKS
		Revision Date	June, 2004		Update In Illustration & Parts List.
1		277615002	BODY - GRIP LEFT HAND TRIGGER	1	
2		277746002	FACEPLATE - LEFT HAND GRIP	1	
3		277614002	ADAPTER ROD-3/8-16 INTERNAL THREADS	1	
4		277615006	SWITCH - PUSH BUTTON (MOMENTARY)	1	
5		277615005	SWITCH ASSY - TOGGLE MOMENT/OFF/ MOMENT DPDT THRTLE	1	
6		277614006	ROCKER SWITCH ASSY - OFF/ON WATER	1	
7		277614004	SWITCH ASSY - RAISED DOME, RED MOMENTARY ACT.	1	
8		277614010	HI-LOW SCREW - SELF TAP #4 X 1/4”	1	
9		277614009	HI-LOW SCREW - SELF TAP #4X1/2”	2	
10		277746001	JOYSTICK GRIP - LEFT HAND (ROTATION)	1	(INC ALL ITEMS IN THIS FIG)

https://truckmanualshub.com/

Rotation Control Grip Components (Left) Fig 14-52

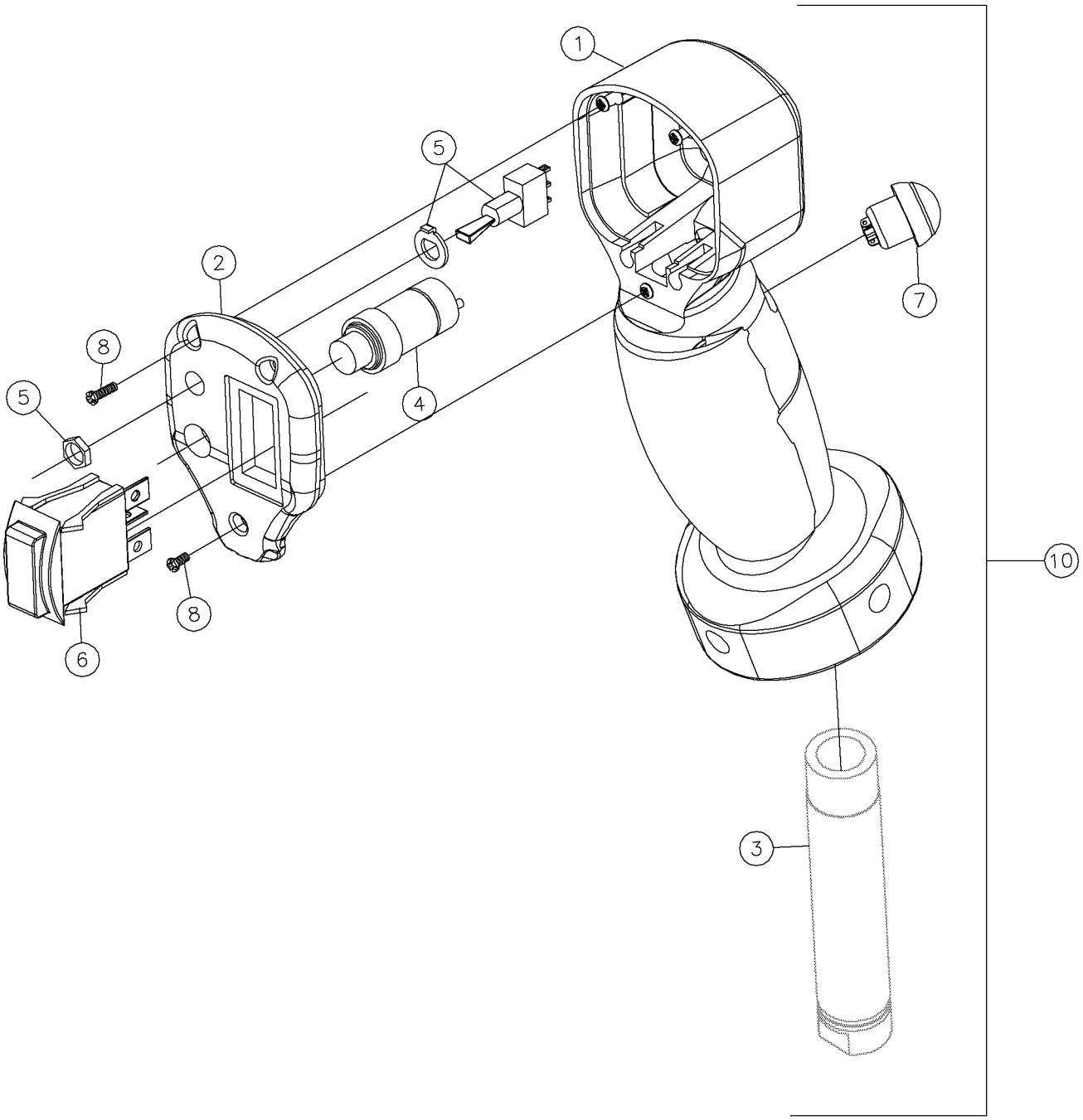

https://truckmanualshub.com/

Rotation Control Grip Components (Left) Fig 14-52

REF. NO.	*	PART NO.	DESCRIPTION	QTY.	REMARKS
1		277615002	BODY - GRIP LEFT HAND TRIGGER	1	
2		277746002	FACE PLATE - LEFT HAND GRIP	1	
3		277614002	ADAPTER ROD-3/8-16 INTERNAL THREADS	1	
4		277615006	SWITCH - PUSH BUTTON (MOMENTARY)	1	
5		277615005	SWITCH ASSY - TOGGLE MOMENT/OFF/ MOMENT DPDT THRTLE	1	
6		277614006	ROCKER SWITCH ASSY - OFF/ON UPPER VISE ROT.	1	
7		277614004	SWITCH ASSY - RAISED DOME, RED MOMENTARY ACT.	1	
8		277614010	HI-LOW SCREW - SELF TAP #4 X 1/4”	1	
9		277614009	HI-LOW SCREW - SELF TAP #4X1/2”	2	
10		277746001	JOYSTICK GRIP - LEFT HAND (ROTATION)	1	(INC ALL ITEMS IN THIS FIGURE)

https://truckmanualshub.com/

Water Pressure Manifold Components Fig 14-53r01

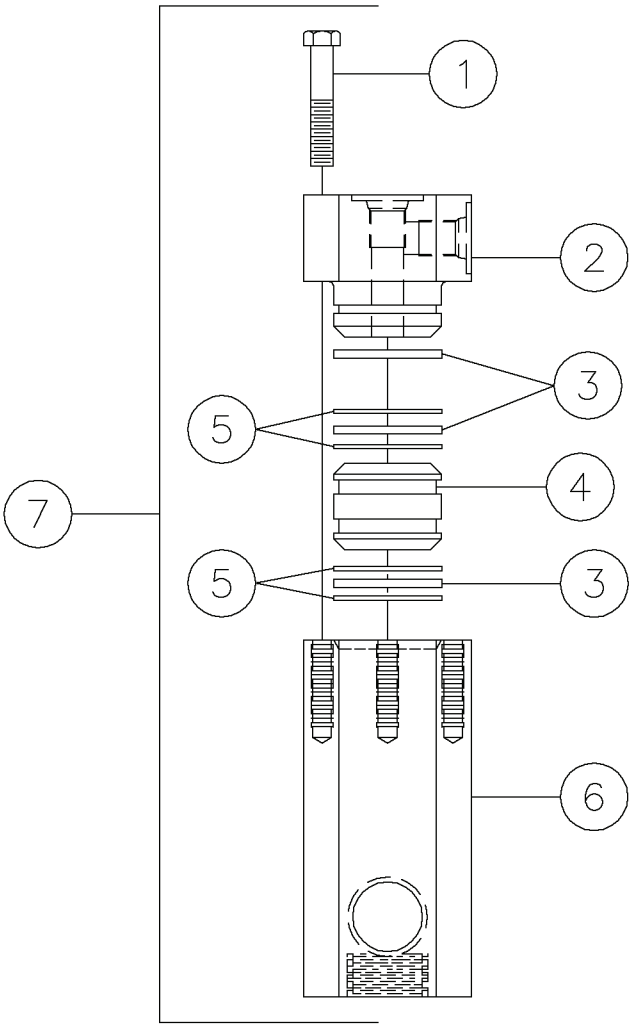

Water Pressure Manifold Components Fig 14-53r01

REF. NO.	*	PART NO.	DESCRIPTION	QTY.	REMARKS
1		250008001	BOLT 1/4-20 X 1 1/4 ZINC PL	6	
2		238138001	ENDCAP-MANIFOLD OUTLET FITTING	1	
3		234818001	O-RING 1.254OD X1.114ID-.070	3	
4		296256059	PISTON - MANIFOLD, DUAL O-RING, W/ BACKER	1	
5		296256060	SEAL - BACKER, 8-024	4	
6		238137001	FITTING-WATER MANIFLD PRESSURE	1	
7		296256854	DIAGNOSTIC MANIFOLD ASSEMBLY	1	(INC ALL ITEMS IN THIS FIG)

https://truckmanualshub.com/

Water Pressure Manifold Components Fig 14-53

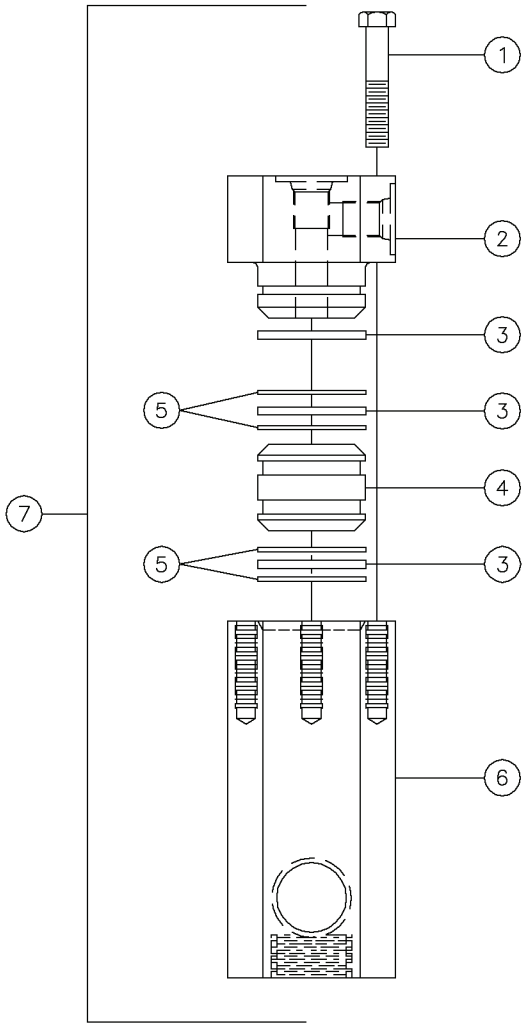

Water Pressure Manifold Components Fig 14-53

REF. NO.	*	PART NO.	DESCRIPTION	QTY.	REMARKS
1		250008001	BOLT 1/4-20 X 1 1/4 ZINC PL	6	
2		238138001	ENDCAP-MANIFOLD OUTLET FITTING	1	
3		234818001	O-RING 1.254OD X1.114ID-.070	3	
4		296256059	PISTON - MANIFOLD, DUAL O-RING, W/ BACKER	1	
5		296256060	SEAL - BACKER, 8-024	4	
6		238137001	FITTING-WATER MANIFLD PRESSURE	1	
7		296256061	MANIFOLD ASSEMBLY - WATER PRESSURE	1	(INC ALL ITEMS IN FIGURE)

https://truckmanualshub.com/

Tubing Tong Components Fig 14-54

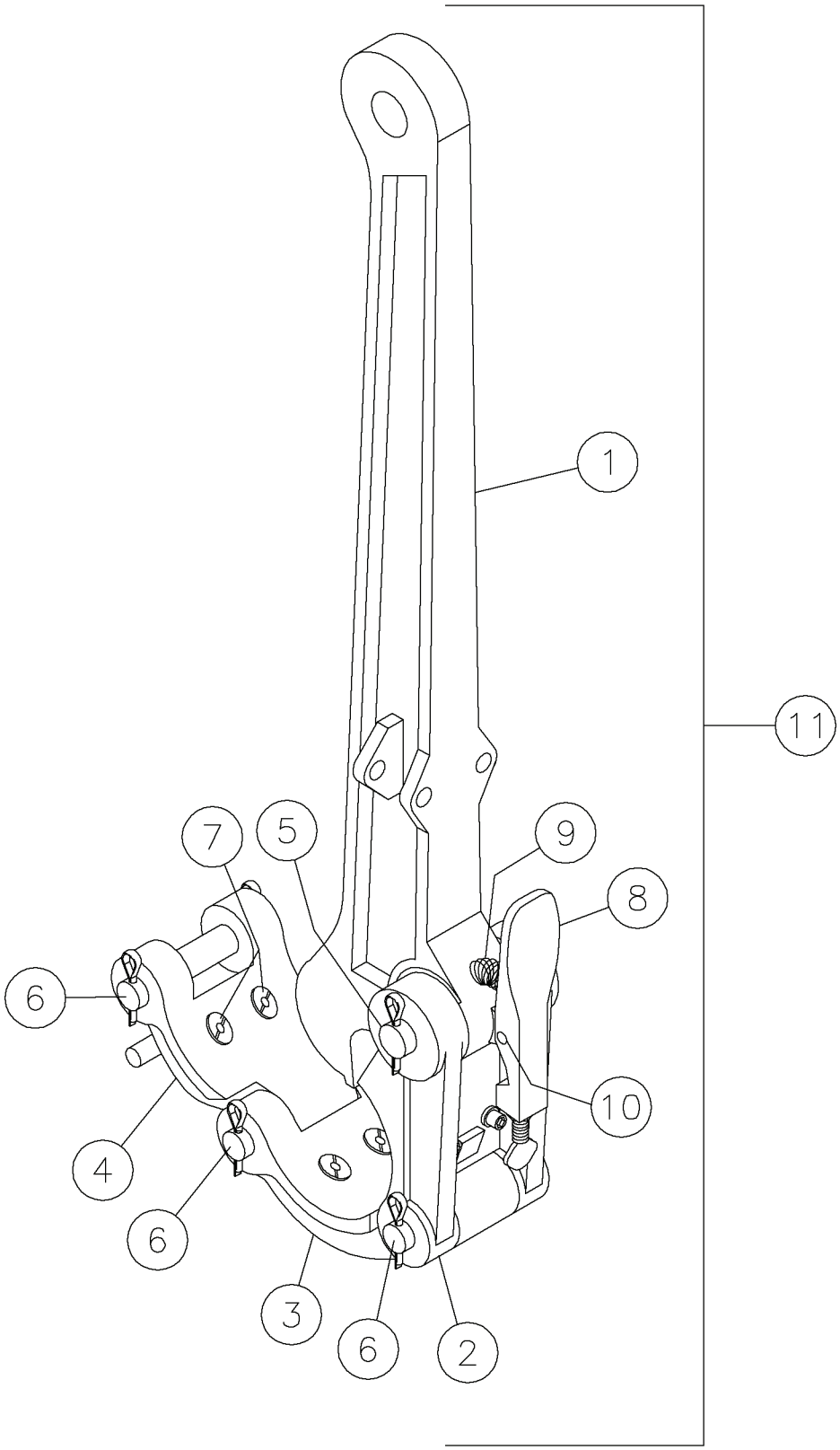

https://truckmanualshub.com/

Tubing Tong Components Fig 14-54

REF. NO.	*	PART NO.	DESCRIPTION	QTY.	REMARKS
1		230970003	TONG HANDLE	1	
2		230970005	HANDLE JAW	1	
3		230970007	CENTER JAW	1	
4		230970009	LATCH JAW	1	
5		230970011	HANDLE PIN	1	
6		230970013	JAW PIN	3	
7		230970015	BUSHING AND SCREW	6	
8		230970017	ADJUSTABLE TONG LATCH	1	
9		230970019	LATCH SPRING	1	
10		230970021	LATCH RIVET	1	
11		230970001	TONG-K30 LIGHT WEIGHT TUBING	1	(INC ALL ITEMS IN THIS FIGURE)

https://truckmanualshub.com/

Auto Greaser Cylinder Components - 1" x 2 3/8" Fig 14-55

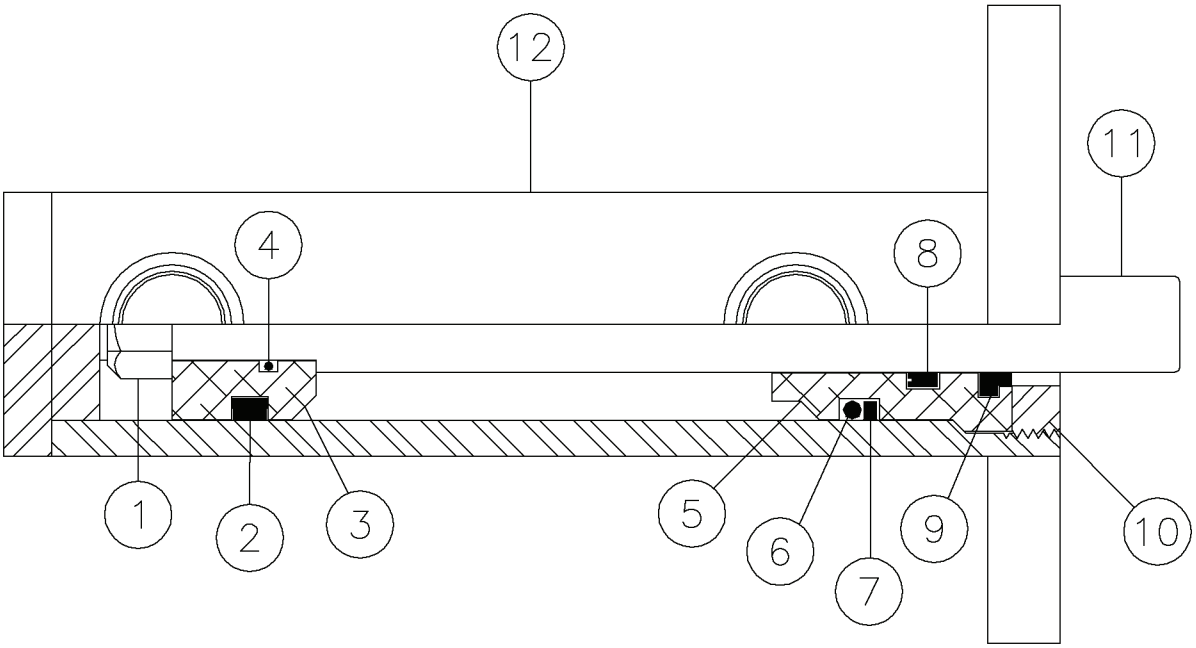

https://truckmanualshub.com/

Auto Greaser Cylinder Components - 1" x 2 3/8" Fig 14-55

REF. NO.	*	PART NO.	DESCRIPTION	QTY.	REMARKS
		Revision Date	June, 2004		Addition To Manual
1		236113003	NUT	1	
2		NSS	PSP - SEAL	1	
3		296251772	PISTON	1	
4		NSS	O-RING	1	
5		234359007	HEAD	1	
6		NSS	O-RING	1	
7		NSS	BACKUP	1	
8		NSS	ROD SEAL	1	
9		NSS	DUST SEAL	1	
10		234359013	COLLAR	1	
11		296265525	ROD - CYLINDER	1	
12		296265524	BODY - CYLINDER		
		294899001	CYLINDER - HYD 1 X 2-3/8	1	INC. ALL ITEMS IN FIGURE
		296251775	SEAL KIT	1	
		NSS	Not Sold Separately		

https://truckmanualshub.com/

Auto Greaser Valve Components Fig 14-56

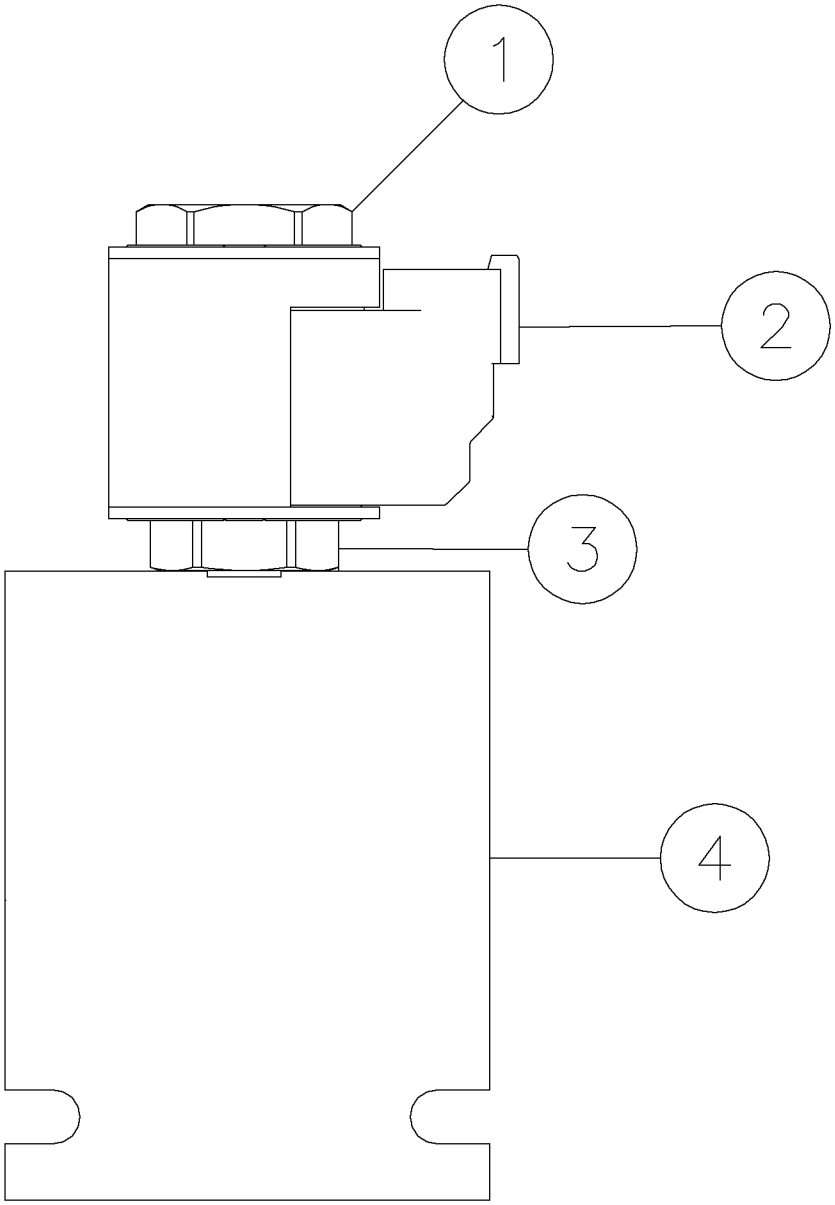

https://truckmanualshub.com/

Auto Greaser Valve Components Fig 14-56

REF. NO.	*	PART NO.	DESCRIPTION	QTY.	REMARKS
		Revision Date	June, 2004		Addition To Manual
1		296265526	NUT - COIL	1	
2		296265527	COIL	1	
3		244725009	CARTRIDGE	1	
		244725011	SEAL KIT	1	
4		NSS	BLOCK	1	
		294901001	VALVE - GREASER	1	INC. ALL ITEMS IN FIGURE
		NSS	Not Sold Separately		

https://truckmanualshub.com/

Hose Carrier Components (15' Rack) Fig 14-57

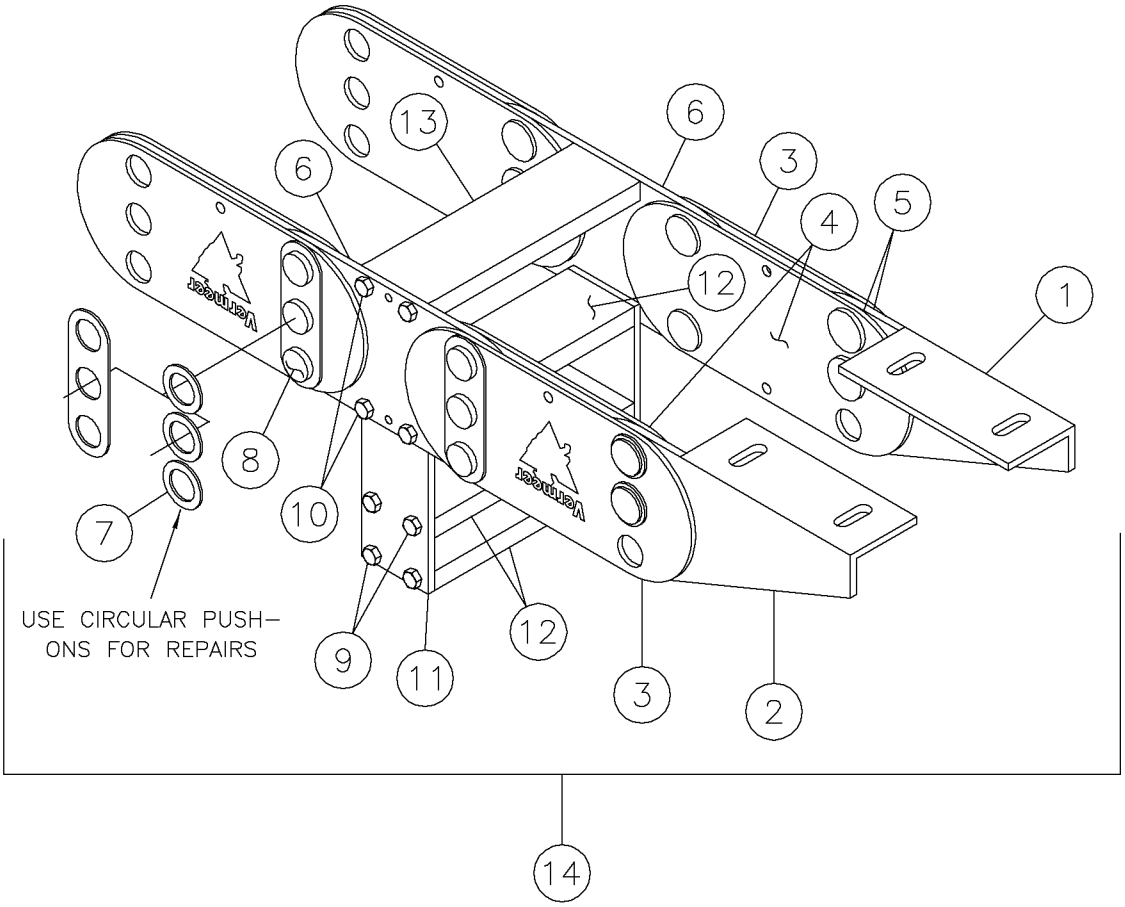

https://truckmanualshub.com/

Hose Carrier Components (15' Rack) Fig 14-57

REF. NO.	*	PART NO.	DESCRIPTION	QTY.	REMARKS
		Revision Date	July, 2004		Addition To Manual
1		234256003	PT45E MOUNTING BRACKET ASSY(L)	2	
2		234256005	PT45E MOUNTING BRACKET ASSY(R)	2	
3		234256007	PT45E OUTER LINK W/VERMEERLOGO	34	
4		234256009	PT45E OUTER LINK	34	
5		234256011	PT45E ANTI-FRICTION DISC	138	
6		276280003	PT45E INNER LINK R13.39	68	
7		234256015	PT45E CIRCULAR PUSH-ON	198	
8		234256017	PT45E HINGE PIN-PUSH ON FASTNR	198	
9		215252017	SCREW-WHIZ LOCK	204	
10		276280005	SCREW-WHIZ LOCK 10-32 X .62	68	
11		276280007	BRACKET - PT45E CARRIER	34	
12		276280009	PT45E ALUM CHANNEL 5.375”	51	
13		276280011	PT45E ALUM CHANNEL 5.625”	17	
14		294636001	TRACK - HOSE CARRIER 15’	1	(INC. ALL ITEMS IN THIS FIG.)

https://truckmanualshub.com/

This page intentionally left blank.

https://truckmanualshub.com/

Revision History

REVISION	DATE	PAGE(S)	DESCRIPTION
P2.01	July 2004	TOC 1-1, 1-2, 1-3, 1-4, 1-5, 2-2, 2-4, 2-6, 2-9, 3-1, 3-7, 3-9, 4-5, 4-6, 4-7, 4-8, 4-11, 4-12, 4-13, 4-14, 4-23, 4-24, 4-30, 4-34, 4-35, 4-37, 5-1, 5-1A, 5-5, 5-6, 5-7, 5-8, 5-11, 5-12, 5-13, 5-19, 5-20, 5-21, 5-25, 5-26, 7-1, 8-3, 9-2, 9-3, 10-2, 10-3, 10-4, 10-5, 10-7, 10-8, 11-3, 11-4, 12-1, 12-2, 12-3, 13-2, 14-30, 14-31, 14-32, 14-37, 14-48, 14-51, 14-52, 14-53, New Pages 1-1x01,1-1x02, 1-1x03, 1-1x04, 1-1x05, 1-1x06, 1-1x07, 1-2x01, 1-2x02, 1-2x03, 1-2x04, 1-2x05, 1-2x06, 5-32, 5-33, 14-55, 14-56 and 14-57	2ND Edition, First Revision
P2.02	March, 2006	TOC, 14-12r01 Revised	2nd Edition, Second Revision
P2.03	March, 2008	TOC, 14-1, 14-2, 14-3, Revised	2nd Edition, Third Revision

https://truckmanualshub.com/