https://truckmanualshub.com/

Bolens
SINCE-1850

Operator's Manual

Transmatic Lawn Tractor
Models 660 – 688

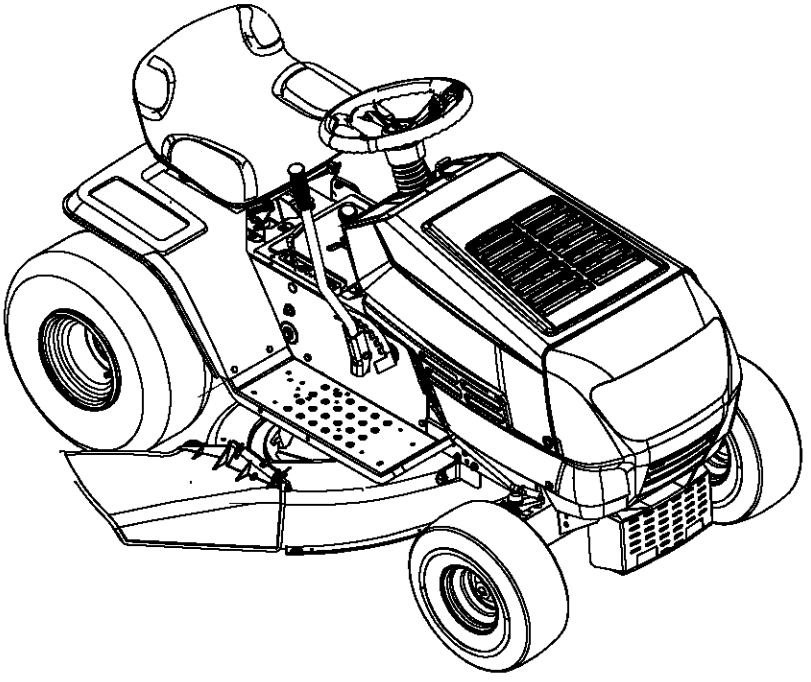

IMPORTANT: READ SAFETY RULES AND INSTRUCTIONS CAREFULLY

Warning: This unit is equipped with an internal combustion engine and should not be used on or near any unimproved forest-covered, brush-covered or grass-covered land unless the engine's exhaust system is equipped with a spark arrester meeting applicable local or state laws (if any). If a spark arrester is used, it should be maintained in effective working order by the operator. In the State of California the above is required by law (Section 4442 of the California Public Resources Code). Other states may have similar laws. Federal laws apply on federal lands. A spark arrester for the muffler is available through your nearest engine authorized service dealer or contact the service department, P.O. Box 361131 Cleveland, Ohio 44136-0019.

TROY-BILT LLC, P.O. BOX 361131 CLEVELAND, OHIO 44136-0019

PRINTED IN U.S.A.

FORM NO. 769-00565A
(1/2003)

https://truckmanualshub.com/

TABLE OF CONTENTS

Content	Page
Important Safe Operation Practices	3
Slope Gauge	7
Tractor Set-up	8
Know Your Lawn Tractor	11
Operating Your Lawn Tractor	13
Making Adjustments	16
Service	20
Maintaining your Lawn Tractor	22
Off-Season Storage	27
Troubleshooting	28
Attachments & Accessories	27

FINDING MODEL NUMBER

This Operator's Manual is an important part of your new lawn tractor. It will help you assemble, prepare and maintain the unit for best performance. Please read and understand what it says.

STOP

Before you start assembling your new equipment, please locate the model plate on the equipment and copy the information from it in the space provided below. The information on the model plate is very important if you need help from our Customer Support Department or an authorized dealer.

- You can locate the model number by looking beneath the seat. A sample model plate is explained below. For future reference, please copy the model number and the serial number of the equipment in the space below.

Bolens.
www.bolens.com
TROY-BILT LLC
P. O. BOX 361131
CLEVELAND, OH 44136
330-558-7220
866-840-6483

Copy the model number here: _____

Copy the serial number here: _____

ENGINE INFORMATION

The engine manufacturer is responsible for all engine-related issues with regards to performance, power-rating, specifications, warranty and service. Please refer to the engine manufacturer's Owner's/Operator's Manual packed separately with your unit for more information.

CALLING CUSTOMER SUPPORT

If you have difficulty assembling this product or have any questions regarding the controls, operation or maintenance of this unit, please call the Customer Support Department.

Call **1- (330) 558-7220** or **1- (866) 840-6483** to reach a Customer Support representative. Please have your unit's model number and serial number ready when you call. See previous section to locate this information. You will be asked to enter the serial number in order to process your call.

For more details about your unit, visit our website at www.bolens.com

https://truckmanualshub.com/

SECTION 1: IMPORTANT SAFE OPERATION PRACTICES

WARNING: This symbol points out important safety instructions which, if not followed, could endanger the personal safety and/or property of yourself and others. Read and follow all instructions in this manual before attempting to operate this machine. Failure to comply with these instructions may result in personal injury. When you see this symbol—heed its warning.

DANGER: This machine was built to be operated according to the rules for safe operation in this manual. As with any type of power equipment, carelessness or error on the part of the operator can result in serious injury. This machine is capable of amputating hands and feet and throwing objects. Failure to observe the following safety instructions could result in serious injury or death.

WARNING: Engine exhaust, some of its constituents, and certain vehicle components contain or emit chemicals known to the State of California to cause cancer and birth defects or other reproductive harm.

GENERAL OPERATION

1. Read, understand, and follow all instructions on the machine and in the manual(s) before attempting to assemble and operate. Keep this manual in a safe place for future and regular reference and for ordering replacement parts.
2. Be familiar with all controls and their proper operation. Know how to stop the machine and disengage them quickly.
3. Never allow children under 14 years old to operate this machine. Children 14 years old and over should read and understand the operation instructions and safety rules in this manual and should be trained and supervised by a parent.
4. Never allow adults to operate this machine without proper instruction.
5. To help avoid blade contact or a thrown object injury, keep bystanders, helpers, children and pets at least 75 feet from the machine while it is in operation. Stop machine if anyone enters the area.
6. Thoroughly inspect the area where the equipment is to be used. Remove all stones, sticks, wire, bones, toys, and other foreign objects which could be picked up and thrown by the blade(s). Thrown objects can cause serious personal injury.
7. Plan your mowing pattern to avoid discharge of material toward roads, sidewalks, bystanders and the like. Also, avoid discharging material against a wall or obstruction which may cause discharged material to ricochet back toward the operator.
8. Always wear safety glasses or safety goggles during operation and while performing an adjustment or repair to protect your eyes. Thrown objects which ricochet can cause serious injury to the eyes.
9. Wear sturdy, rough-soled work shoes and close-fitting slacks and shirts. Loose fitting clothes and jewelry can be caught in movable parts. Never operate this machine in bare feet or sandals.
10. Be aware of the mower and attachment discharge direction and do not point it at anyone. Do not operate the mower without the discharge cover or entire grass catcher in its proper place.
11. Do not put hands or feet near rotating parts or under the cutting deck. Contact with the blade(s) can amputate hands and feet.
12. A missing or damaged discharge cover can cause blade contact or thrown object injuries.
13. Stop the blade(s) when crossing gravel drives, walks, or roads and while not cutting grass.
14. Watch for traffic when operating near or crossing roadways. This machine is not intended for use on any public roadway.
15. Do not operate the machine while under the influence of alcohol or drugs.
16. Mow only in daylight or good artificial light.
17. Never carry passengers.
18. Disengage blade(s) before shifting into reverse. Back up slowly. Always look down and behind before and while backing to avoid a back-over accident.
19. Slow down before turning. Operate the machine smoothly. Avoid erratic operation and excessive speed.
20. Disengage blade(s), set parking brake, stop engine and wait until the blade(s) come to a complete stop before removing grass catcher, emptying grass, unclogging chute, removing any grass or debris, or making any adjustments.
21. Never leave a running machine unattended. Always turn off blade(s), place transmission in neutral, set parking brake, stop engine and remove key before dismounting.
22. Use extra care when loading or unloading the machine into a trailer or truck. This unit should not be driven up or down ramp(s), because the unit could tip over, causing serious personal injury. The unit must be pushed manually on ramp(s) to load or unload properly.

https://truckmanualshub.com/

23. Muffler and engine become hot and can cause a burn. Do not touch.
24. Check overhead clearances carefully before driving under low hanging tree branches, wires, door openings etc., where the operator may be struck or pulled from the unit, which could result in serious injury.
25. Disengage all attachment clutches, depress the brake pedal completely and shift into neutral before attempting to start engine.
26. Your machine is designed to cut normal residential grass of a height no more than 10". Do not attempt to mow through unusually tall, dry grass (e.g., pasture) or piles of dry leaves. Dry grass or leaves may contact the engine exhaust and/or build up on the mower deck presenting a potential fire hazard.
27. Use only accessories and attachments approved for this machine by the machine manufacturer. Read, understand and follow all instructions provided with the approved accessory or attachment.
28. Data indicates that operators, age 60 years and above, are involved in a large percentage of riding mower-related injuries. These operators should evaluate their ability to operate the riding mower safely enough to protect themselves and others from serious injury.
29. If situations occur which are not covered in this manual, use care and good judgment. Contact your customer service representative for assistance.

SLOPE OPERATION

Slopes are a major factor related to loss of control and tip-over accidents which can result in severe injury or death. All slopes require extra caution. If you cannot back up the slope or if you feel uneasy on it, do not mow it.

For your safety, use the slope gauge included as part of this manual to measure slopes before operating this unit on a sloped or hilly area. If the slope is greater than 15 degrees as shown on the slope gauge, do not operate this unit on that area or serious injury could result.

DO:

1. Mow up and down slopes, not across. Exercise extreme caution when changing direction on slopes.
2. Watch for holes, ruts, bumps, rocks, or other hidden objects. Uneven terrain could overturn the machine. Tall grass can hide obstacles.
3. Use slow speed. Choose a low enough speed setting so that you will not have to stop or shift while on the slope. Tires may lose traction on slopes even though the brakes are functioning properly. Always keep machine in gear when going down slopes to take advantage of engine braking action.
4. Follow the manufacturer's recommendations for wheel weights or counterweights to improve stability.
5. Use extra care with grass catchers or other attachments. These can change the stability of the machine.
6. Keep all movement on the slopes slow and gradual. Do not make sudden changes in speed or direction. Rapid engagement or braking could cause the front of the machine to lift and rapidly flip over backwards which could cause serious injury.
7. Avoid starting or stopping on a slope. If tires lose traction, disengage the blade(s) and proceed slowly straight down the slope.

DO NOT:

1. Do not turn on slopes unless necessary; then, turn slowly and gradually downhill, if possible.
2. Do not mow near drop-offs, ditches or embankments. The mower could suddenly turn over if a wheel is over the edge of a cliff, ditch, or if an edge caves in.
3. Do not try to stabilize the machine by putting your foot on the ground.
4. Do not use a grass catcher on steep slopes.
5. Do not mow on wet grass. Reduced traction could cause sliding.
6. Do not shift to neutral and coast downhill. Over-speeding may cause the operator to lose control of the machine resulting in serious injury or death.
7. Do not tow heavy pull behind attachments (e.g. loaded dump cart, lawn roller, etc.) on slopes greater than 5 degrees. When going down hill, the extra weight tends to push the tractor and may cause you to loose control. (e.g. tractor may speed up, braking and steering ability are reduced, attachment may jack-knife and cause tractor to overturn).

CHILDREN

1. Tragic accidents can occur if the operator is not alert to the presence of children. Children are often attracted to the machine and the mowing activity. They do not understand the dangers. Never assume that children will remain where you last saw them.
    a. Keep children out of the mowing area and in watchful care of a responsible adult other than the operator.
    b. Be alert and turn machine off if a child enters the area.

https://truckmanualshub.com/

c. Before and while backing, look behind and down for small children.
d. Never carry children, even with the blade(s) shut off. They may fall off and be seriously injured or interfere with safe machine operation.
e. Use extreme care when approaching blind corners, doorways, shrubs, trees or other objects that may block your vision of a child who may run into the machine.
f. Disengage the cutting blade(s) before shifting in reverse. The "No-Cut-In Reverse" feature is a reminder not to cut in reverse and to help avoid back over accidents. Do not defeat it.
g. Keep children away from hot or running engines. They can suffer burns from a hot muffler.
h. Remove key when machine is unattended to prevent unauthorized operation.

9. Never allow children under 14 years old to operate the machine. Children 14 years old and over should read and understand the operation instructions and safety rules in this manual and should be trained and supervised by a parent.

TOWING

1. Tow only with a machine that has a hitch designed for towing. Do not attach towed equipment except at the hitch point.
2. Follow the manufacturers recommendation for weight limits for towed equipment and towing on slopes.
3. Never allow children or others in or on towed equipment.
4. On slopes, the weight of the towed equipment may cause loss of traction and loss of control.
5. Travel slowly and allow extra distance to stop.
6. Do not shift to neutral and coast downhill.

SERVICE

SAFE HANDLING OF GASOLINE:

1. **To avoid personal injury or property damage** use extreme care in handling gasoline. **Gasoline is** extremely flammable and the vapors are explosive. Serious personal injury can occur when gasoline is spilled on yourself or your clothes which can ignite. Wash your skin and change clothes immediately.
   a. Use only an approved gasoline container.
   b. Never fill containers inside a vehicle or on a truck or trailer bed with a plastic liner. Always place containers on the ground away from your vehicle before filling.
   c. When practical, remove gas-powered equipment from the truck or trailer and refuel it on the ground. If this is not possible, then refuel such equipment on a trailer with a portable container, rather than from a gasoline dispenser nozzle.
   d. Keep the nozzle in contact with the rim of the fuel tank or container opening at all times until fueling is complete. Do not use a nozzle lock-open device.
   e. Extinguish all cigarettes, cigars, pipes and other sources of ignition.
   f. Never fuel machine indoors.
   g. Never remove gas cap or add fuel while the engine is hot or running. Allow engine to cool at least two minutes before refueling.
   h. Never over fill fuel tank. Fill tank to no more than ½ inch below bottom of filler neck to allow space for fuel expansion.
   i. Replace gasoline cap and tighten securely.
   j. If gasoline is spilled, wipe it off the engine and equipment. Move unit to another area. Wait 5 minutes before starting the engine.
   k. To reduce fire hazards, keep machine free of grass, leaves, or other debris build-up. Clean up oil or fuel spillage and remove any fuel soaked debris.
   l. Never store the machine or fuel container inside where there is an open flame, spark or pilot light as on a water heater, space heater, furnace, clothes dryer or other gas appliances.
   m. Allow a machine to cool at least five minutes before storing.

GENERAL SERVICE:

1. Never run an engine indoors or in a poorly ventilated area. Engine exhaust contains carbon monoxide, an odorless, and deadly gas.
2. Before cleaning, repairing, or inspecting, make certain the blade(s) and all moving parts have stopped. Disconnect the spark plug wire and ground against the engine to prevent unintended starting.
3. Periodically check to make sure the blades come to complete stop within approximately (5) five seconds after operating the blade disengagement control. If the blades do not stop within the this time frame, your unit should be serviced professionally by an authorized service dealer.
4. Check brake operation frequently as it is subjected to wear during normal operation. Adjust and service as required.
5. Check the blade(s) and engine mounting bolts at frequent intervals for proper tightness. Also, visually inspect blade(s) for damage (e.g., excessive wear, bent, cracked).

https://truckmanualshub.com/

Replace the blade(s) with the original equipment manufacturer's (O.E.M.) blade(s) only, listed in this manual. "Use of parts which do not meet the original equipment specifications may lead to improper performance and compromise safety!"

6. Mower blades are sharp. Wrap the blade or wear gloves, and use extra caution when servicing them.
7. Keep all nuts, bolts, and screws tight to be sure the equipment is in safe working condition.
8. Never tamper with the safety interlock system or other safety devices. Check their proper operation regularly.
9. After striking a foreign object, stop the engine, disconnect the spark plug wire(s) and ground against the engine. Thoroughly inspect the machine for any damage. Repair the damage before starting and operating.
10. Never attempt to make adjustments or repairs to the machine while the engine is running.
11. Grass catcher components and the discharge cover are subject to wear and damage which could expose moving parts or allow objects to be thrown. For safety protection, frequently check components and replace immediately with original equipment manufacturer's (O.E.M.) parts only, listed in this manual. "Use of parts which do not meet the original equipment specifications may lead to improper performance and compromise safety!"
12. Do not change the engine governor settings or over-speed the engine. The governor controls the maximum safe operating speed of the engine.
13. Maintain or replace safety and instruction labels, as necessary.
14. Observe proper disposal laws and regulations for gas, oil, etc. to protect the environment.

WARNING: YOUR RESPONSIBILITY- Restrict the use of this power machine to persons who read, understand and follow the warnings and instructions in this manual and on the machine.

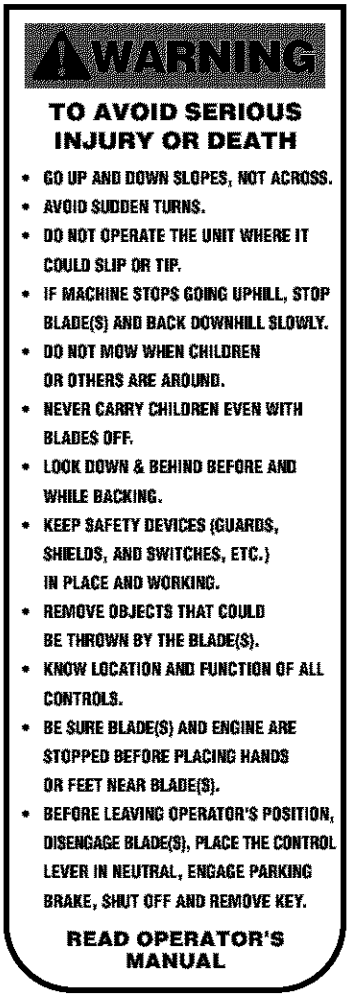

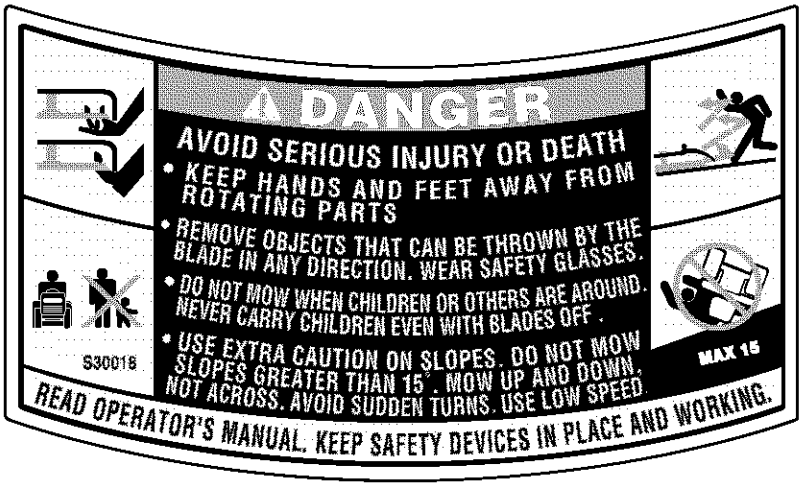

https://truckmanualshub.com/

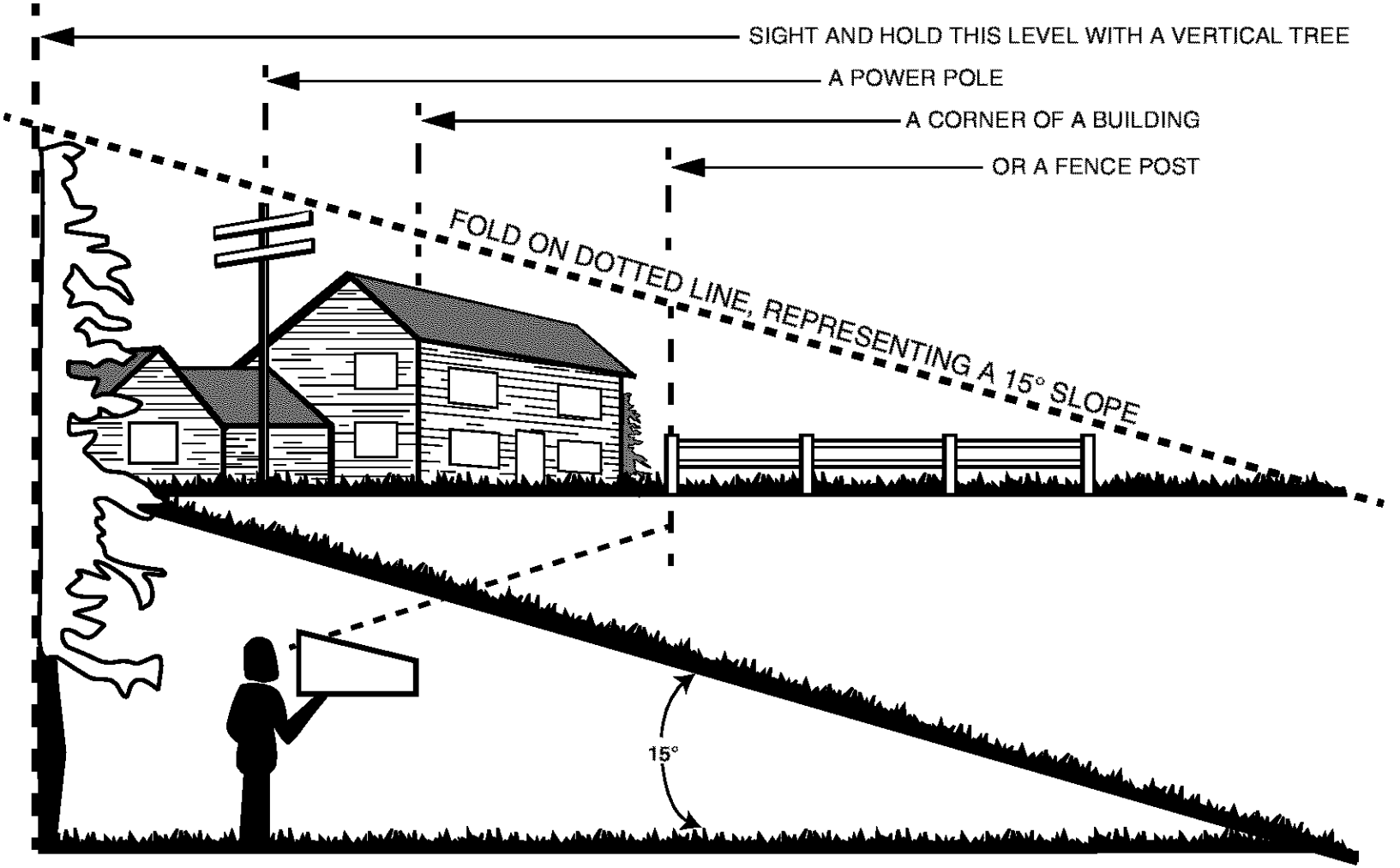

WARNING

Do not mow on inclines with a slope in excess of 15 degrees (a rise of approximately 2-1/2 feet every 10 feet). A riding mower could overturn and cause serious injury. If operating a walk-behind mower on such a slope, it is extremely difficult to maintain your footing and you could slip, resulting in serious injury.

Operate RIDING mowers up and down slopes, never across the face of slopes.

https://truckmanualshub.com/

SECTION 3: TRACTOR SET-UP

IMPORTANT: Your tractor is shipped with motor oil in the engine. However, you **MUST** check the oil level before starting the engine and operating. Refer to the separate *Briggs & Stratton* Operator/Owner Manual (or *Tecumseh* engine's Owner's Manual) packed with your tractor. Read instructions carefully.

NOTE: *Reference to right or left hand side of the unit is observed from the driver's seat, facing forward.*

Tools Required For Assembly

(1) 1/2" socket wrench (for steering wheel)

(1) 9/16" wrench or socket wrench (for seat)

(2) 7/16" wrenches or socket wrenches (for battery)

Attaching the Battery Cables

NOTE: *The positive battery terminal is marked Pos. (+). The negative battery terminal is marked Neg. (–).*

- The positive cable (heavy red wire) is secured to the positive battery terminal (+) with a hex bolt and hex nut at the factory. Make certain that the rubber boot covers the terminal to help protect it from corrosion.
- Remove the hex bolt and wing nut from the negative cable.
- Remove the black plastic cover, if present, from the negative battery terminal and attach the negative cable (heavy black wire) to the negative battery terminal (–) with the bolt and wing nut.
- Make certain the hold-down rod is in position over the battery, securing it in place. See Figure 1.

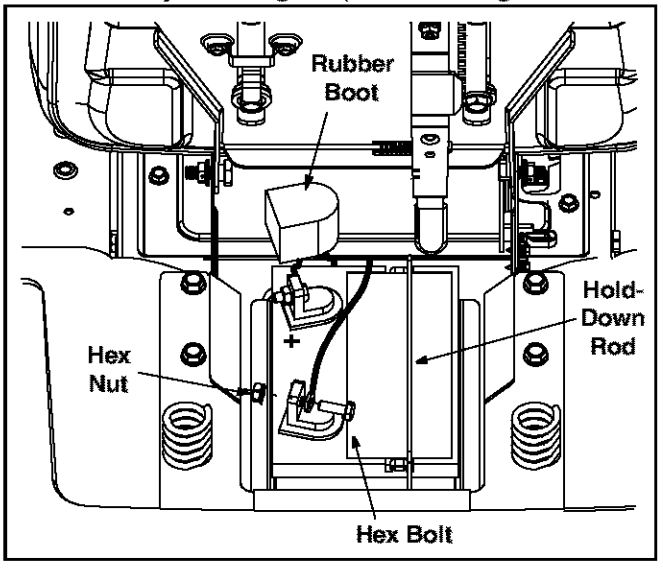

Figure 1

NOTE: *If the battery is put into service after the date shown on top of battery, charge the battery as instructed on page 24 of this manual prior to operating the tractor.*

Attaching The Steering Wheel

- The hardware for attaching the steering wheel has been packed within the steering wheel, beneath steering wheel cap. Carefully pry off the steering wheel cap and remove the hardware.

NOTE: *There are two different styles of steering wheel cap. See Figure 2.* ***Styles vary by model.***

- Remove the steering bellow from its packaged location on the deck engagement/lift lever (found on the right hand side of tractor). **NOTE:** *Tractor models 668 & 688 do NOT require a steering bellow and do NOT come equipped with one.*
- On models so equipped, place the steering bellow over the steering shaft extending through the dash. See Figure 2.

NOTE: *If the openings on each end of the steering bellow are two different sizes, the smaller end goes down, against the dash of the lawn tractor.*

- **With the wheels of the tractor pointing straight forward,** place the steering wheel over the steering shaft.
- Place the washer (with the cupped side down) over the steering shaft and secure with the hex bolt. See Figure 2.
- Place the steering wheel cap over the center of the steering wheel and push downward until it "clicks" into place.

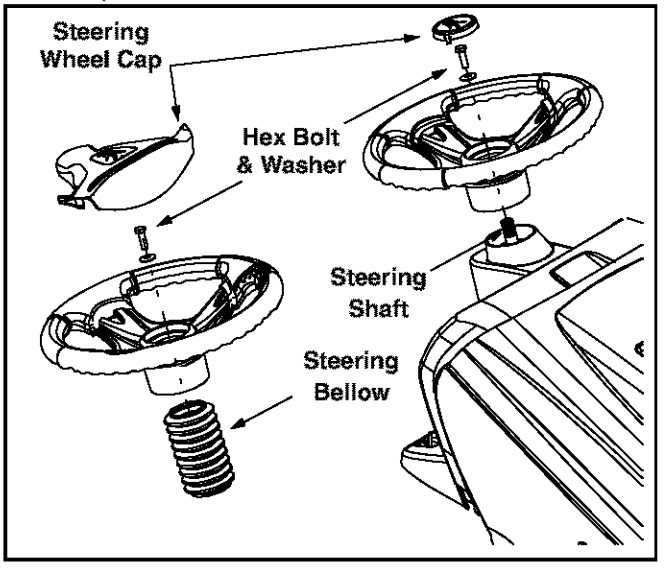

Figure 2

https://truckmanualshub.com/

Attaching The Seat

Seat styles vary by tractor model and there are three different styles available:

- Standard Adjustment
- Quick Adjustment &
- Knob Adjustment

Refer to Figure 3, Figure 4 and Figure 5 to identify which your tractor's seat style and follow applicable instructions below.

NOTE: *For shipping reasons, seats are either fastened to the tractor seat's pivot bracket with a plastic tie, or mounted backward to the pivot bracket. In either case, free the seat form its shipping position and remove the two* ***hex*** *screws (or knobs, on models so equipped) from the bottom of seat before proceeding with applicable instructions below.*

Standard Adjustment Seat

1. Position the shoulder screws (found on the base of the seat) inside the slot openings in the seat pivot bracket. Figure 3.
2. Slide the seat slightly rearward in the seat pivot bracket, lining up the rear slots in the pivot bracket with the remaining two holes in the seat's base.
3. Select desired position for the seat, and secure with the two hex screws removed earlier. See Figure 3.

Quick Adjustment Seat

NOTE: *If your seat was shipped mounted backwards on the seat pivot bracket, pull out the tab found on the seat stop and hold it open while sliding the seat off the seat pivot bracket. See Figure 4.*

1. Line up the plastic seat spacers with the slots in seat pivot bracket.
2. Slide seat in until front seat spacer engages the seat stop. See Figure 4.

WARNING: Before operating this machine, make sure the seat is engaged in the seat stop, stand behind the machine and pull back on seat until fully engaged into stop.

Knob Adjustment Seat

1. Position the shoulder screws (found on the base of the seat) inside the slot openings in the seat pivot bracket. Figure 5.
2. Slide the seat slightly rearward in the seat pivot bracket, lining up the rear slots in the pivot bracket with the remaining two holes in the seat's base.
3. Select desired position for the seat, and secure with the two knobs removed earlier. See Figure 5.

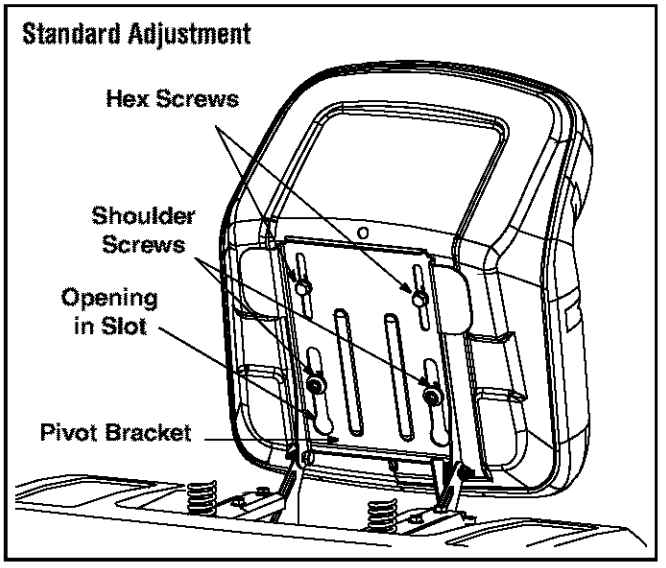

Figure 3

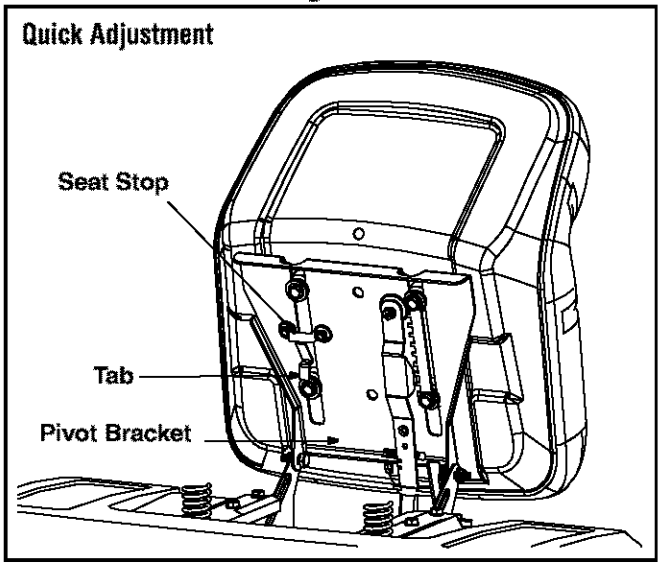

Figure 4

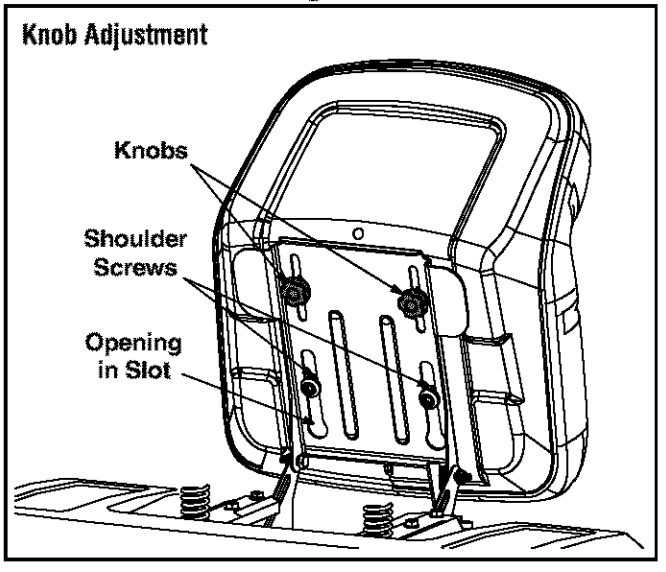

Figure 5

https://truckmanualshub.com/

Gas and Oil Fill-up

The gasoline tank is located under the hood and has a capacity of either two or three gallons. Do not overfill.

WARNING: Use extreme care when handling gasoline. Gasoline is extremely flammable and the vapors are explosive. Never fuel machine indoors or while the engine is hot or running. Extinguish cigarettes, cigars, pipes, and other sources of ignition.

Service the engine with gasoline and oil as instructed in the separate *Briggs & Stratton* Operator/Owner Manual (or *Tecumseh* engine's Owner's Manual) packed with your tractor. Read instructions carefully.

IMPORTANT: Your tractor is shipped with motor oil in the engine. However, you **MUST** check the oil level before operating. Be careful not to overfill.

Shipping Brace Removal

WARNING: Make sure the riding mower's engine is off, remove the ignition key, and set the parking brake before removing the shipping brace.

- Locate the shipping brace and accompanying warning tag found on the right side of the mower, between the discharge chute and the cutting deck. See Figure 6.

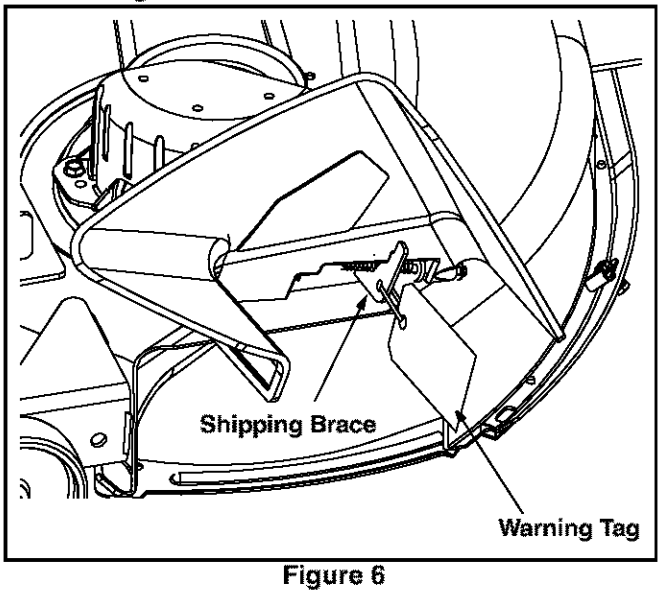

Figure 6

- While holding the discharge chute with your left hand, remove the shipping brace with your right hand by grasping it between your thumb and index finger and rotating it clockwise.

WARNING: The shipping brace, used for packaging purposes only, must be removed and discarded before operating your riding mower.

WARNING: The mowing deck is capable of throwing objects. Failure to operate the riding mower without the discharge cover in the proper operating position could result in serious personal injury and/or property damage.

Identifying the Mulch Plug (if so equipped)

On tractor models with 38- and 42-inch decks so equipped, a mulch plug can be found within the cutting deck's discharge opening.

NOTE: *Refer to* **Mulching** *on page 15 for more detailed information.*

If you'd prefer to operate the cutting deck without mulching, simply remove the mulch plug by unthreading the plastic wing nut which fastens it to the cutting deck. This will allow the clippings to discharge out of the discharge opening during operation. See Figure 7.

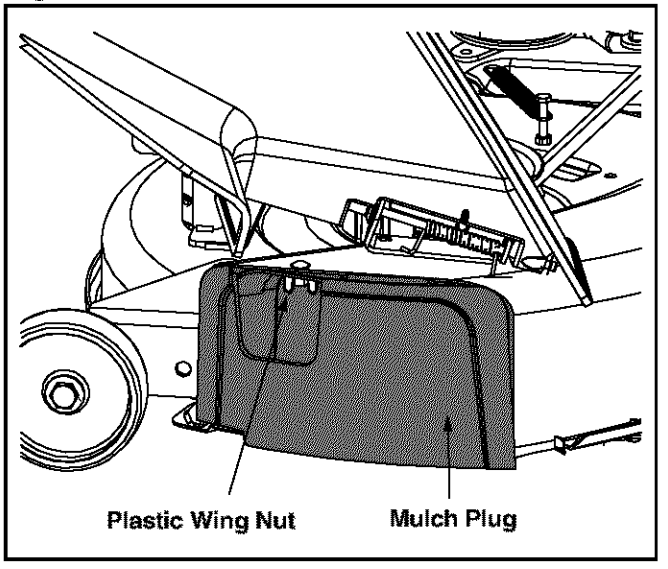

Figure 7

Tire Pressure

WARNING: Maximum tire pressure under any circumstances is 30 psi. Equal tire pressure should be maintained at all times.

The tires on your unit may be over-inflated for shipping purposes. Reduce the tire pressure before operating the tractor. Recommended operating tire pressure is approximately 10 p.s.i for the rear tires & 14 p.s.i. for the front tires. Check sidewall of tire for maximum p.s.i.

https://truckmanualshub.com/

SECTION 4: KNOW YOUR LAWN TRACTOR

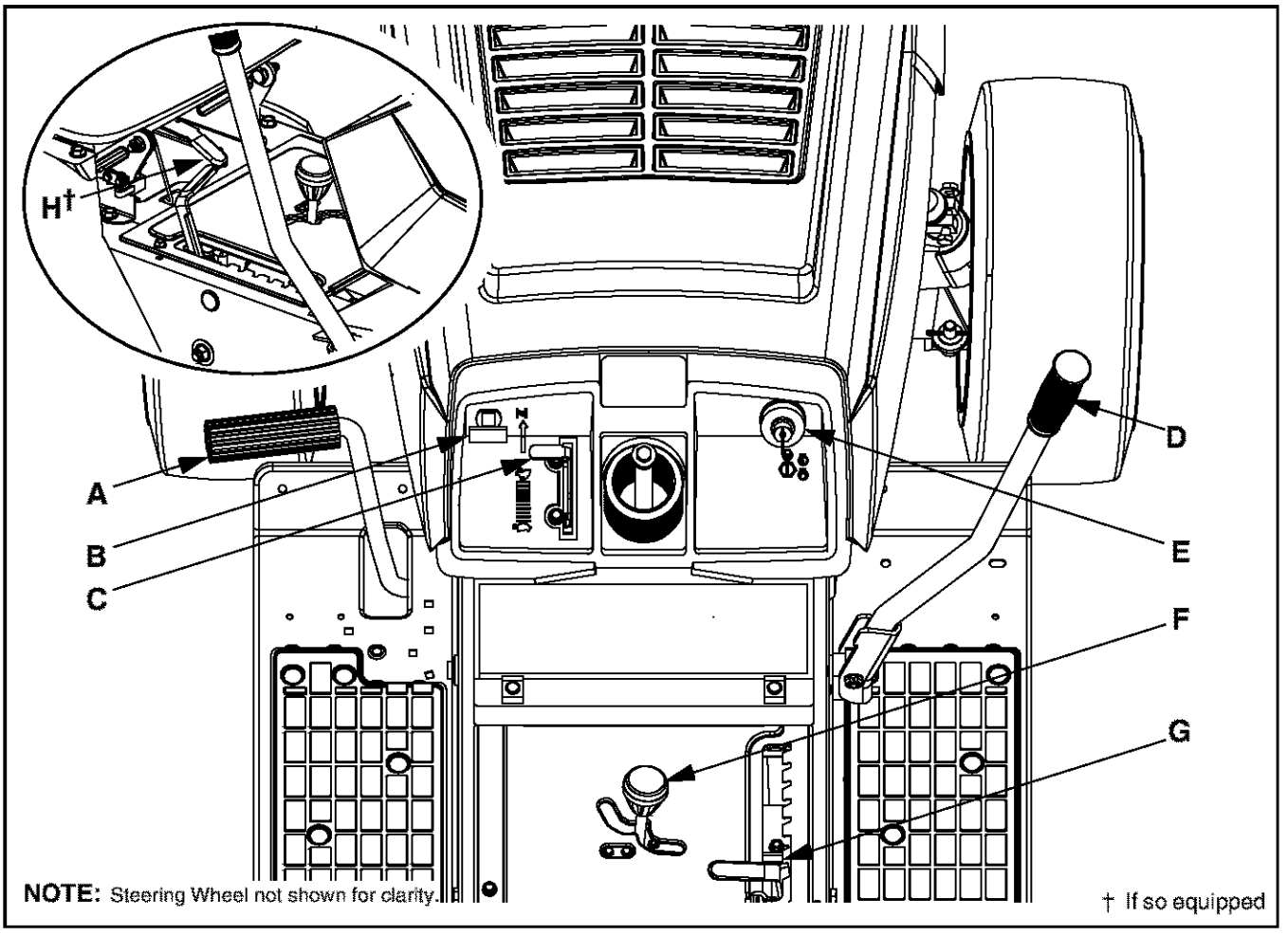

Figure 8

A	Clutch-brake Pedal	**E**	Ignition Switch
B	Choke Control†	**F**	Shift Lever
C	Throttle Control Lever	**G**	Speed Control Lever / Parking Brake
D	Deck Engagement / Lift Lever	**H**	Seat Adjustment Lever†

Ignition Switch

The ignition switch is located on the right side of the tractor's dash.To start the engine, insert the key into the ignition switch and turn clockwise to the **START** position. Release the key into the **ON** position once engine has fired. See Figure 9.

Refer to **Starting The Engine** on page 13 of this manual for detailed starting instructions.

WARNING: Never leave a running machine unattended. Always disengaged PTO, Shift into neutral, set parking brake, stop engine and remove key to prevent unintended starting.

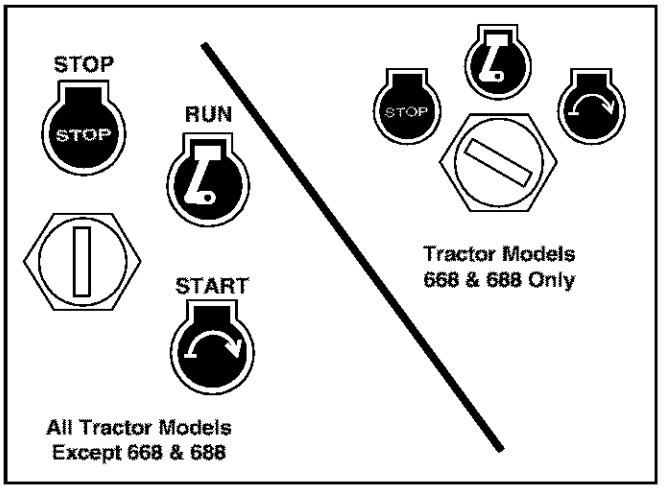

Figure 9

https://truckmanualshub.com/

Choke Control

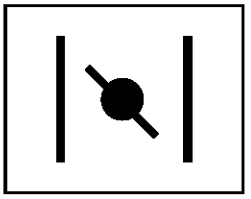

On some models, moving the throttle lever all the way forward activates the engine's choke control. On all other models, the choke control can be found on the left side of the dash panel and is activated by pulling the knob outward. Activating the choke control closes the choke plate on the carburetor and aids in starting the engine. Refer to **Starting The Engine** on page 13 of this manual for detailed starting instructions.

Throttle Control Lever

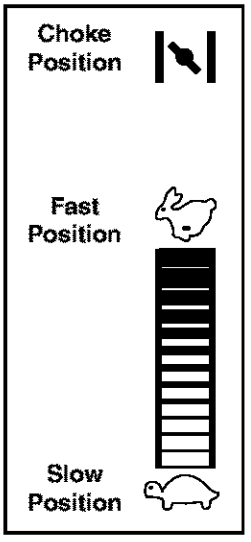

The throttle control lever is located on the left side of the tractor's dash panel. This lever controls the speed of the engine and, on some models, when pushed all the way forward, the choke control also. When set in a given position, the throttle will maintain a uniform engine speed.

IMPORTANT: When operating the tractor with the cutting deck engaged, be certain that the throttle lever is **always** in the FAST (rabbit) position.

Speed Control Lever

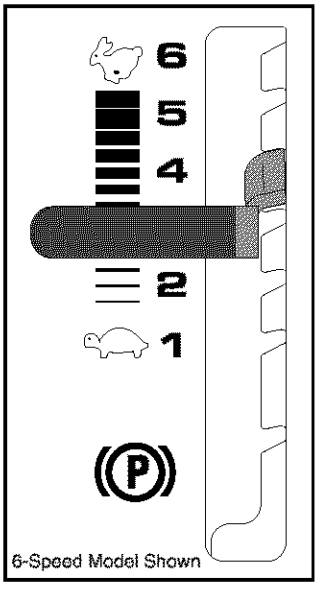

6-Speed Model Shown

The speed control lever, located on the right side of the center console, allows you to regulate the ground speed of the lawn tractor. To use, depress the clutch-brake pedal and move the lever out of the parking brake notch and forward to increase the tractor's ground speed. When a desired speed has been reached, release the lever into an appropriate notch to maintain that speed.
To slow the tractor's ground speed, depress the clutch-brake pedal and move the speed control lever rearward and release it into a notch.

Parking Brake

To set the parking brake, fully depress the clutch-brake pedal. Move the speed control lever all the way to the rear and release it into the parking brake position. Release the clutch-brake pedal to allow the parking brake to engage.

To release the parking brake, depress the clutch-brake pedal and move the speed control lever out of the notches to the desired position. Release the speed control lever and the clutch-brake pedal.

NOTE: *The parking brake must be set if the operator leaves the seat with the engine running or the engine will automatically shut off.*

IMPORTANT: Always set the parking brake when leaving the tractor unattended.

Shift Lever

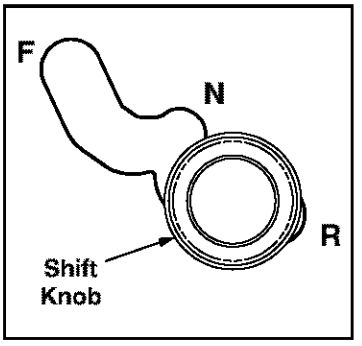

The shift lever is located in the center of the console and has three positions, **F** (Forward), **N** (Neutral) and **R** (Reverse). See Figure 8. The clutch-brake pedal must be fully depressed and the tractor must not be in motion when the moving shift lever.

IMPORTANT: Never force the shift lever. Doing so may result in serious damage to the tractor's transmission.

NOTE: *If difficulty is encountered while attempting to shift, release the clutch-brake pedal slightly before fully depressing the pedal again.*

Clutch-brake Pedal

The clutch-brake pedal is located on the left side of the lawn tractor, along the running board. Depress the clutch-brake pedal part way down when slowing the tractor by changing speeds (Refer to **Speed Control Lever**). Depress the pedal all the way down to engage the disc brake and bring the tractor to a complete stop.

NOTE: *The pedal must be depressed to start the engine. Refer to* **Safety Interlock Switches** *on page 13.*

Deck Engagement / Lift Lever

Found on the right side of the tractor, the deck engagement/lift lever is used to set the mowing deck's cutting height and engage the power to the cutting deck or other (separately available) attachments. To operate, move the lever to the right and forward, before placing it a notch for your desired cutting height. Moving the lever to the right and all the way rearward placing it into the BLADES STOP position disengages power to the cutting deck/ attachment.

NOTE: *The deck engagement/lift lever* ***must*** *be in the disengaged (BLADES STOP) position when starting the engine, when traveling in reverse and if the operator leaves the seat.*

https://truckmanualshub.com/

SECTION 5: OPERATING THE LAWN TRACTOR

WARNING

AVOID SERIOUS INJURY OR DEATH

- GO UP AND DOWN SLOPES, NOT ACROSS.
- AVOID SUDDEN TURNS.
- DO NOT OPERATE THE UNIT WHERE IT COULD SLIP OR TIP.
- IF MACHINE STOPS GOING UPHILL, STOP BLADE(S) AND BACK DOWNHILL SLOWLY.
- DO NOT MOW WHEN CHILDREN OR OTHERS ARE AROUND.
- NEVER CARRY CHILDREN, EVEN WITH BLADES OFF.
- LOOK DOWN AND BEHIND BEFORE AND WHILE BACKING.
- KEEP SAFETY DEVICES (GUARDS, SHIELDS, AND SWITCHES) IN PLACE AND WORKING.
- REMOVE OBJECTS THAT COULD BE THROWN BY THE BLADE(S).
- KNOW LOCATION AND FUNCTION OF ALL CONTROLS.
- BE SURE BLADE(S) AND ENGINE ARE STOPPED BEFORE PLACING HANDS OR FEET NEAR BLADE(S).
- BEFORE LEAVING OPERATOR'S POSITION, DISENGAGE BLADE(S), PLACE THE SHIFT LEVER IN NEUTRAL, ENGAGE PARKING BRAKE, SHUT ENGINE OFF AND REMOVE KEY.

READ OPERATOR'S MANUAL

Safety Interlock System

WARNING: Read, understand, and follow all instructions and warnings on the machine and in this manual before operating.

This tractor is equipped with a safety interlock system for the protection of the operator. If the interlock system should ever malfunction, do not operate the tractor. Contact an authorized service dealer. The safety interlock system prevents the engine from cranking or starting unless the parking brake is engaged, and the deck engagement/lift lever is in the disengaged (BLADES STOP) position.

- The engine will automatically shut off if the operator leaves the seat before engaging the parking brake.
- The engine will automatically shut off if the operator leaves the tractor's seat with the deck engagement/ lift lever in ANY position other than BLADES STOP.
- The engine will automatically shut off if the deck engagement/lift lever is moved out of the BLADES STOP position with the shift lever in R (reverse).

Before Starting Engine

WARNING: Read, understand, and follow all instructions and warnings on the machine and in this manual before operating.

Starting the Engine

WARNING: Do not operate the tractor if the interlock system is malfunctioning. This system was designed for your safety and protection.

NOTE: *Refer to the* **TRACTOR SET-UP** *on page 8 of this manual for Gasoline and Oil fill-up instructions.*

- Insert the tractor key into the ignition switch.
- Place the deck engagement/lift lever in the BLADES STOP position.
- Engage the tractor's parking brake.
- Activate the choke control.
- Turn the ignition key clockwise to the START position. After the engine starts, release the key. It will return to the ON position.

IMPORTANT: Do NOT hold the key in the START position for longer than ten seconds at a time. Doing so may cause damage to your engine's electric starter.

- After the engine starts, deactivate the choke control and place the throttle control in the FAST position.

IMPORTANT: Do NOT leave the choke control on while operating the tractor. Doing so will result in a "rich" fuel mixture and cause the engine to run poorly.

NOTE: *If Starting problems are encountered, refer to* **TROUBLE SHOOTING GUIDE** *on page 28.*

Stopping the Engine

WARNING: If you strike a foreign object, stop the engine, disconnect the spark plug wire(s) and ground against the engine. Thoroughly inspect the machine for any damage. Repair the damage before restarting and operating

- If the blades are engaged, place the deck engagement/lift lever in the BLADES STOP position.
- Depress the clutch-brake pedal to bring the tractor to a complete stop.
- Turn the ignition key counterclockwise to the OFF position.
- Engage the tractor's parking brake.
- Remove the key from the ignition switch to prevent unintended starting.

https://truckmanualshub.com/

Operating The Lawn Tractor

WARNING: Always look down and behind before and while backing up to avoid a back-over accident.

WARNING: Before leaving the operator's position. Always place the deck engagement/ lift lever in the BLADES STOP position, shift into neutral, set parking brake, stop engine and remove key to prevent unintended starting.

- Move throttle control lever to full throttle.

NOTE: *Always operate the tractor with the throttle control lever in the FAST (rabbit) position for the most efficient use of the cutting deck or other (separately available) attachments.*

- Place the shift lever in either the FORWARD or REVERSE position.
- Release the parking brake by depressing the clutch-brake pedal and positioning the speed control lever in desired position.

IMPORTANT: First-time operators should use speed positions 1 or 2. Become completely familiar with the tractor's operation and controls before operating the tractor in higher speed positions.

- Release clutch-brake pedal slowly to put unit into motion.
- The lawn tractor is brought to a stop by depressing the clutch-brake pedal.

NOTE: *When operating the unit initially, there will be little difference between the highest two speeds until after the belts have seated themselves into the pulleys during the break-in period.*

WARNING: Before leaving the operator's position for any reason, disengage the blades, place the shift lever in neutral, engage the parking brake, shut engine off and remove the key.

IMPORTANT: When stopping the tractor for any reason while on a grass surface, always

- Place the shift lever in neutral,
- Engage the parking brake,
- Shut engine off and remove the key.

Doing so will minimize the possibility of having your lawn "browned" by hot exhaust from your tractor's running engine.

If unit stalls with speed control in high speed, or if unit will not operate with speed control lever in a low speed position, proceed as follows.

- Place shift lever in NEUTRAL.
- Restart engine.
- Place speed control lever in high speed position.
- Release clutch-brake pedal fully.
- Depress clutch-brake pedal.
- Place speed control lever in desired position.
- Place shift lever in either FORWARD or REVERSE, and follow normal operating procedures.

Engaging The Cutting Blades

WARNING: Keep feet and hands away from the discharge opening, the blades or any part of the deck. When the unit is used for anything other than mowing operations, the blade drive should be disengaged.

To engage power to the cutting deck or other (separately available) attachment, proceed as follows:

- Move the deck engagement/lift lever to the right and forward,
- Place the lever a notch for your desired cutting height.
- Moving the lever to the right and all the way rearward placing it into the BLADES STOP position raises and disengages power to the cutting deck.

NOTE: *The deck engagement/lift lever **must** be in the disengaged (BLADES STOP) position when starting the engine, when traveling in reverse and if the operator leaves the seat. Refer to* **Safety Interlock Switches** *on page 13*

Mowing

WARNING: To help avoid blade contact or a thrown object injury, keep bystanders, helpers, children and pets at least 75 feet from the machine while it is in operation. Stop machine if anyone enters the area.

The following information will be helpful when using the cutting deck with your tractor.

WARNING: Plan your mowing pattern to avoid discharge of materials toward roads, sidewalks, bystanders and the like. Also, avoid discharging material against a wall or obstruction which may cause discharged material to ricochet back toward the operator.

- Be sure that the lawn is clear of stones, sticks, wire, or other objects which could damage lawn mower or engine.
- For best results and to insure more even grass distribution, do not mow when lawn is excessively wet.
- Do not mow at high ground speed, especially if a mulch kit or grass collector is installed.

https://truckmanualshub.com/

- For best results it is recommended that the first two laps be cut with the discharge thrown towards the center. After the first two laps, reverse the direction to throw the discharge to the outside for the balance of cutting. This will give a better appearance to the lawn.
- Do not cut the grass too short. Short grass invites weed growth and yellows quickly in dry weather.
- Mowing should always be done with the engine at full throttle.
- Under heavier conditions it may be necessary to go back over the cut area a second time to get a clean cut.
- Do NOT attempt to mow heavy brush and weeds and extremely tall grass. Your tractor is designed to mow lawns, NOT clear brush.
- Keep the blades sharp and replace the blades when worn. Refer to **Cutting Blades** on page 23 of this manual for proper blade sharpening instructions.

Mulching

Some, **NOT ALL**, models come equipped with a mulch kit which incorporates special blades, already standard on your tractor, in a process of recirculating grass clippings repeatedly beneath the cutting deck. The ultra-fine clippings are then forced back into the lawn where they act as a natural fertilizer. Observe the following points for the best results when mulching.

- Never attempt to mulch if the lawn is damp. Wet grass tends to stick to the underside of the cutting deck preventing proper mulching of the clippings.
- Do NOT attempt to mulch more than 1/3 the total height of the grass or approximately 1-1/2 inches. Doing so will cause the clippings to clump up beneath the deck and not be mulched effectively.
- Maintain a slow ground speed to allow the grass clippings more time to effectively be mulched.
- Always position the throttle control lever in the FAST (rabbit) position and allow it to remain there while mowing. Failing to keep the engine at full throttle places strain on the tractor's engine and does not allow the blades to properly mulch grass.

NOTE: *It is not necessary to remove the discharge chute to operate the mower with the mulch kit installed.*

38- and 42-inch Decks

To operate the cutting deck without mulching, on models so equipped, simply remove the mulch plug by unthreading the plastic wing nut which fastens it to the cutting deck. This will allow the clippings to discharge out the side. See Figure 7.

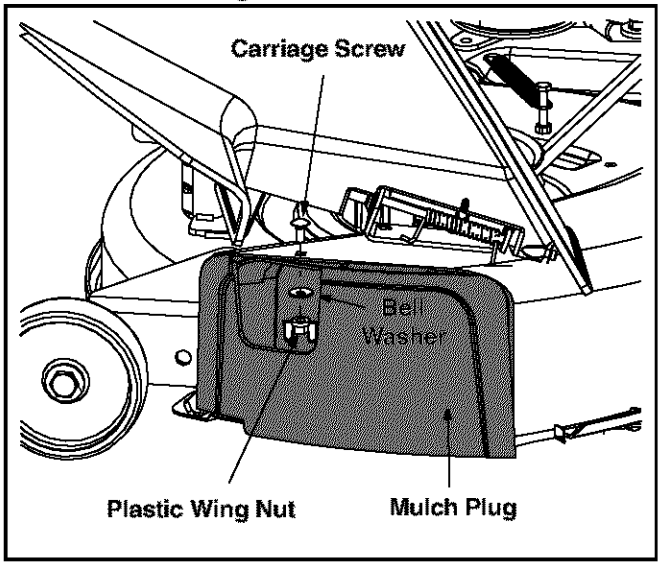

Figure 10

46-inch Decks

On models so equipped, the mulch kit is packed separately within the tractor's crate. Observe the instructions included with the mulch kit for the best results when mulching.

https://truckmanualshub.com/

SECTION 6: MAKING ADJUSTMENTS

WARNING: Never attempt to make any adjustments while the engine is running, except where specified in the operator's manual.

WARNING: Disconnect the spark plug wire(s) and ground against the engine before performing any adjustments, repairs or maintenance.

Standard Adjustment Seat

To adjust the position of the seat, loosen the two hex screws on the bottom of the seat. See Figure 11. Slide the seat forward or backward as desired. Retighten the two screws.

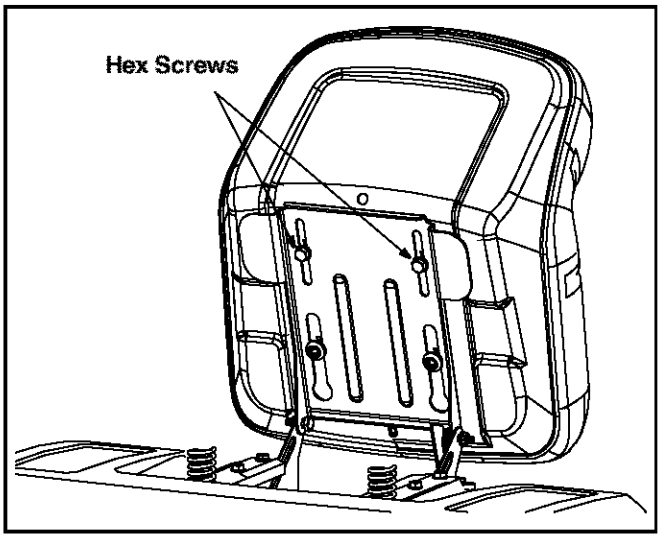

Figure 11

Quick Adjustment Seat (if so equipped)

To adjust the position of the seat on models so equipped, move the seat adjustment lever (located under the seat) to the left and slide the seat forward or backwards. See Figure 12. Make sure seat is locked into one of the six adjustment positions before operating the lawn tractor.

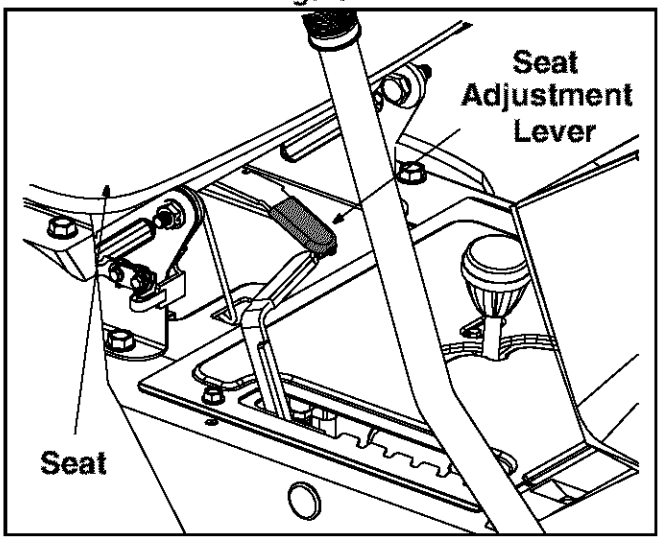

Figure 12

Knob Adjustment Seat (if so equipped)

To adjust the position of the seat on models so equipped, loosen the two knobs on the bottom of the seat. See Figure 13. Slide the seat forward or backward as desired. Retighten the two knobs.

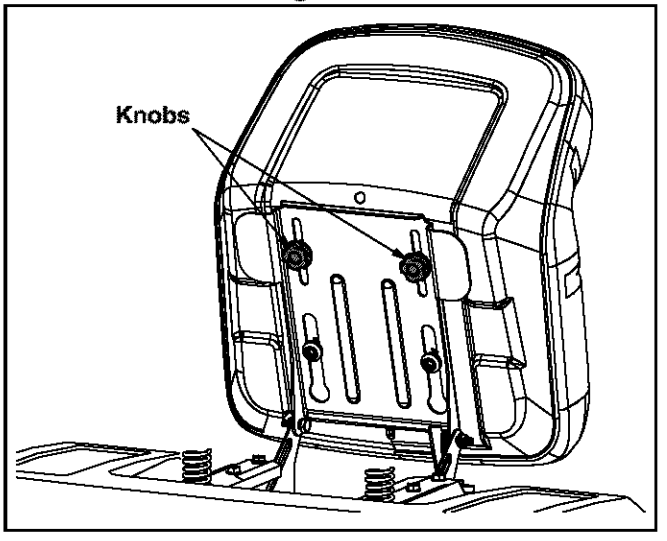

Figure 13

Deck Leveling Adjustment

WARNING: Protect your hands by wearing heavy gloves to grasp the cutting blade.

NOTE: *Check the tractor's tire pressure before performing any deck leveling adjustments. Refer to* **Tires** *later in this section for further information regarding tire pressure.*

The front of the cutting deck is supported by two lift links, one of which can be adjusted to level the deck from both front to rear & side to side. The front of the deck should be between 1/4-inch and 3/8-inch lower than the rear of the deck. Adjust if necessary as follows:

- With the tractor parked on a firm, level surface, place the deck engagement/lift lever in the top cutting height notch (**not** BLADES STOP) position.
- Rotate the blade nearest the discharge chute so that it is parallel with the tractor.

https://truckmanualshub.com/

- Measure the distance from the front of the blade tip to the ground and the rear of the blade tip to the ground. The first measurement taken should be between 1/4" and 3/8" less than the second measurement. Determine the approximate distance necessary for proper adjustment and proceed, if necessary, to the next step.
- Place the deck engagement/lift lever in the engaged (all the way forward) position.
- Remove the hairpin clip from the ferrule found at the bottom of the front, left deck link (hairpin clip is on the inside of the lift link). See Figure 14.

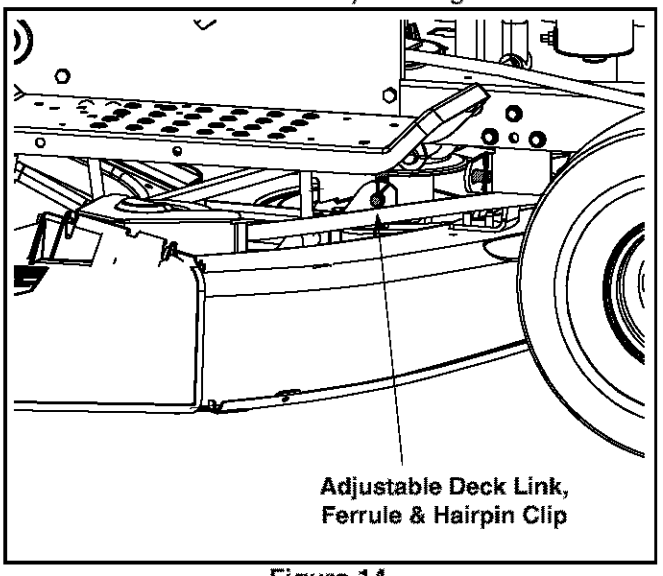

Figure 14

- Pull the ferrule out of the deck hanger and thread the ferrule up or down, as necessary.

NOTE: *Usually only one or two turns are needed.*

- Insert the ferrule back into the deck hanger and refasten with the hairpin clip removed earlier.
- Check the front-to-rear adjustment by re-measuring. Check the side-to-side adjustment by placing a level on the deck surface.
- Readjust if necessary.

Setting the Deck Wheel Height (on models so equipped)

- Select the height position of the cutting deck by placing the Deck Engagement / Lift Lever in any of the five different cutting height notches on the right side of the frame.
- Adjust the deck wheels so that they are between ¼-inch and ½-inch above the ground when the tractor is on a smooth, flat surface such as a driveway.

WARNING: Keep hands and feet away from the discharge opening of the cutting deck.

NOTE: *The deck wheels, on models so equipped, are an anti-scalp feature of the deck and are not designed to support the weight of the cutting deck.*

Refer to **Deck Leveling Adjustment** on page 16 of this manual for more detailed instructions regarding deck adjustments.

Deck Engagement Adjustment

WARNING: Never attempt to make the adjustment while the engine is running. Always shift to neutral, set the parking brake, stop engine and remove key to prevent unintended starting.

The cutting deck engagement may be adjusted to make certain the deck is disengaged when deck engagement/lift lever is in the BLADES STOP position. Correct adjustment as follows.

- With the engine off, place the deck engagement/lift lever in the top cutting height notch (**not** BLADES STOP) position.
- Unthread the shift knob and remove the two flange screws which secure the shift cover panel in place. See Figure 15.

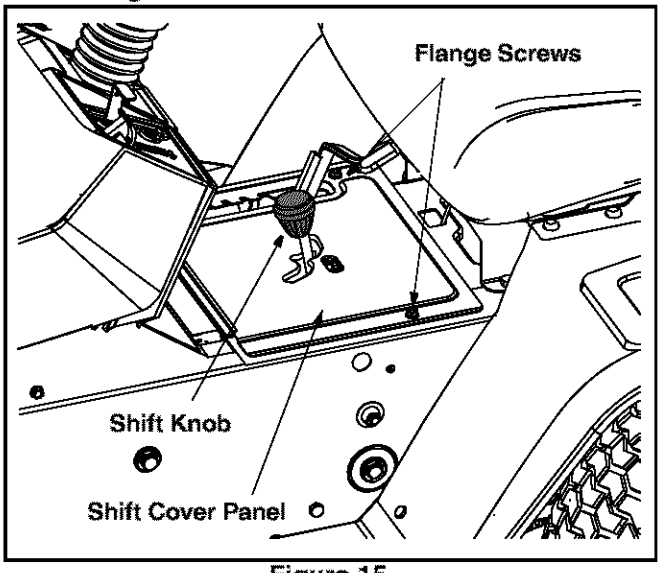

Figure 15

- Remove the shift cover panel and locate the deck disengagement rod. See Figure 16.

NOTE: *There is a small yellow wire connected to a spring switch on the underside of the shift cover panel. Be careful not to damage it when removing the panel.*

https://truckmanualshub.com/

- Remove the hairpin clip which secures the disengagement rod to the stabilizer shaft assembly. See Figure 16.

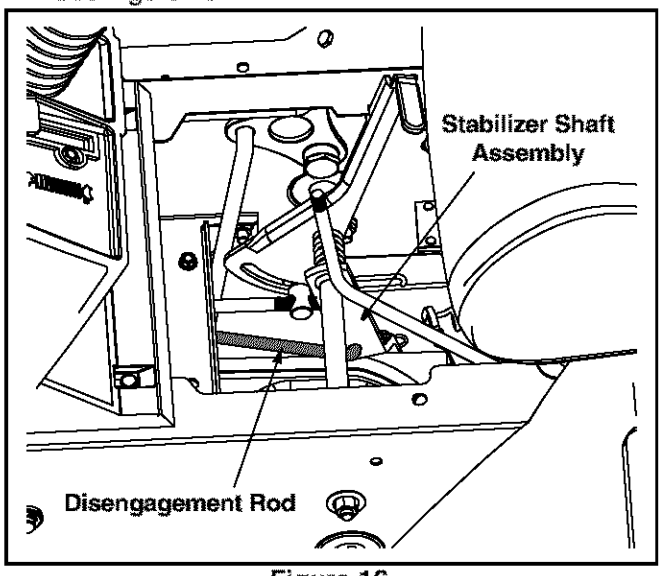

Figure 16

- Pull the rod toward the rear of the tractor (to take up slack), then thread the rod inward or outward (usually only one or two turns) until the rod lines up as precisely as possible with the hole in the stabilizer shaft.

NOTE: *Threading the disengagement rod outward (toward the rear of the tractor) provides for more belt tension. Threading the disengagement rod inward provides for less belt tension.*

- Reinsert the rod and re-secure it to the stabilizer shaft with the cotter pin removed earlier.

Check the adjustment by placing the deck engagement/ lift lever in the BLADES STOP position. The deck should move up and forward, allowing the belt to become loose.

- Reassemble the shift cover panel.
- Start the tractor's engine and test the deck engagement/lift lever to be certain the blades fully disengage when in the BLADES STOP.
- Repeat the adjustment procedure if necessary.

Parking Brake Adjustment

WARNING: Never attempt to adjust the brakes while the engine is running. Always disengage PTO, move shift lever into neutral position, stop engine and remove key to prevent unintended starting.

If the tractor does not come to a complete stop when the clutch-brake pedal is completely depressed, or if the tractor's rear wheels can roll with the parking brake applied, the brake is in need of adjustment. The brake disc can be found on the right side of the transmission in the rear of the tractor. Adjust if necessary as follows:

- Looking at the transmission from the right side of the tractor, locate the extension spring and brake disc. See Figure 17.

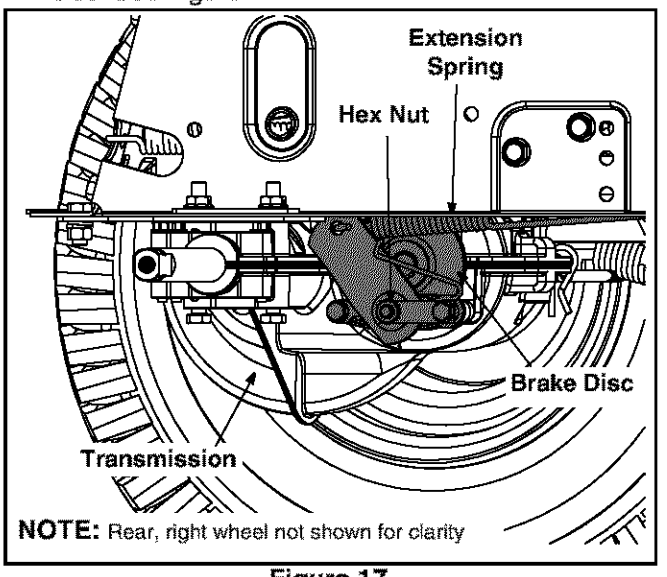

Figure 17

- Loosen, but do NOT remove, the hex nut found on the right side of the brake assembly. See Figure 17.
- Using a feeler gauge, set the gap between the brake disc and the brake puck at **.011"**.
- Re-tighten the hex nut loosened earlier.

Speed Control Adjustment

NOTE: *When operating the unit initially or after replacing the belts, there will be little difference between the highest two speeds until after the belts have gone through a break-in period and have seated themselves into the pulleys.*

If the full range of speeds cannot be obtained on your unit, adjust the speed control as follows.

- Unthread the shift knob and remove the two flange screws which secure the shift cover panel in place. Refer to Figure 15.

https://truckmanualshub.com/

- Remove the shift cover panel and locate the speed control rod. See Figure 18.

NOTE: *There is a small yellow wire connected to a spring switch on the underside of the shift cover panel. Be careful not to damage it when removing the panel.*

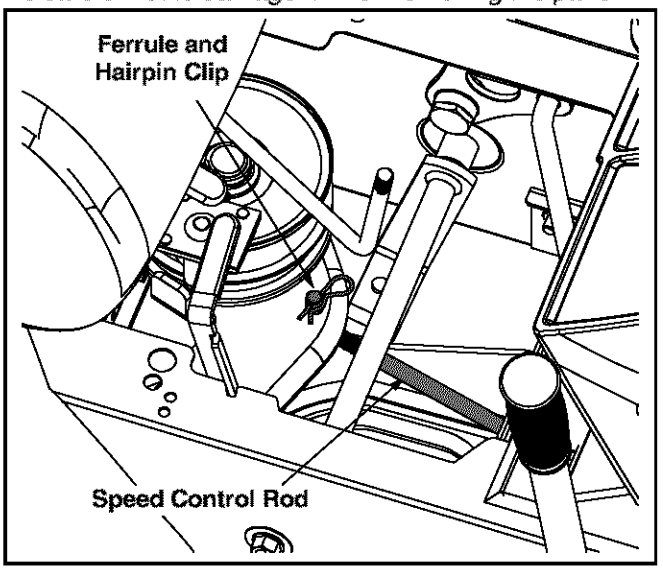

Figure 18

- Remove the hairpin clip which secures the speed control rod's ferrule to the speed bracket. See Figure 18.

At the factory, the speed control rod is adjusted so that 5/8-in. of the rod is exposed beyond the ferrule.

- Adjust the speed control by threading the ferrule inward so that **no more than 3/4-in. of the rod is exposed beyond the ferrule**. See Figure 19.

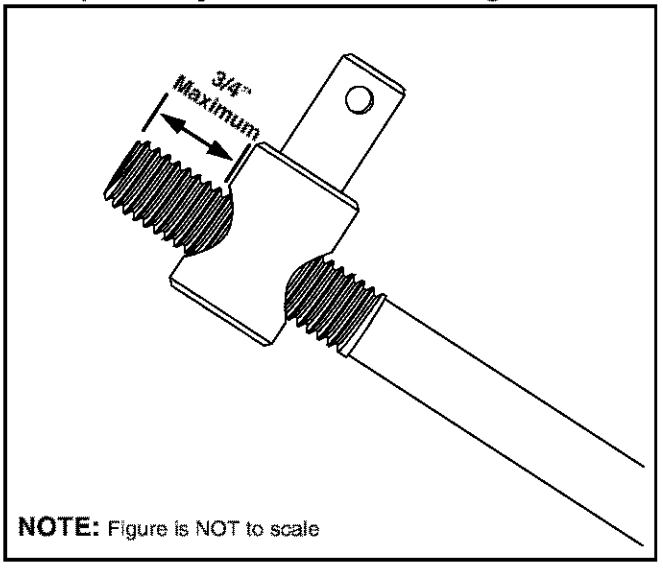

Figure 19

- Reinsert the ferrule and re-secure the rod with the cotter pin removed earlier.
- Reassemble the shift cover panel, start the tractor's engine and test the full range of speeds.

IMPORTANT: If the above adjustment did not result in the tractor obtaining the full range of speeds, see an authorized service dealer to have the variable speed drive system inspected and professionally adjusted.

Steering Adjustment
(Units With Adjustable Tie Rod)

If the tractor turns tighter in one direction than the other, or if either the tie rod and ferrule are being replaced due to damage or wear, the tie rod may need to be adjusted. To do so, proceed as follows:

NOTE: A replacement cotter pin (part no. 714-0470) is needed to complete this adjustment. Have one on hand before proceeding.

- Place the steering wheel in position for straight ahead travel.
- In front of the pivot bar, measure the distance horizontally from the inside of the left rim to the inside of the right rim. Note the distance.
- Behind the pivot bar, measure the distance horizontally from the inside of the left rim to the inside of the right rim. Note the distance.
- The measurement taken in front of the pivot bar should be between 1/16" and 5/16" less than the measurement taken behind the pivot bar. If it is not, an adjustment is necessary. Proceed as follows.
- Locate the ferrule at the right end of the tie rod, just to the rear of the right, front tire of tractor. See Figure 20.

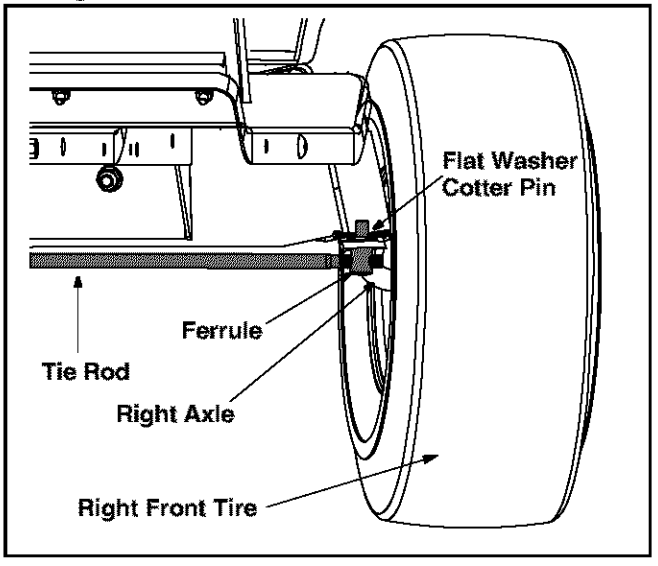

Figure 20

- Remove the cotter pin and flat washer which secures the adjustment ferrule to the tractors right axle.

https://truckmanualshub.com/

- Two turns at a time, thread the adjustment ferrule toward the right, front tire to lengthen the tie rod. Or, thread the adjustment ferrule away from the right, front tire to shorten the tie rod.

NOTE: *Lengthening the tie rod increases the tractor's front tie toe-in. Shortening the tie rod decreases the tractor's front tire toe-in.*

- Reinsert the adjustment ferrule and temporarily secure it with the cotter pin removed earlier.
- Make certain the steering wheel is in position for straight-ahead travel before again taking measurements. Continue to repeat the steps above until a proper adjustment is achieved.
- Secure the tie rod to the right axle with the flat washer removed earlier and a replacement cotter pin.

IMPORTANT: Do NOT reuse the original cotter pin once it has been removed.

SECTION 7: MAINTAINING YOUR LAWN TRACTOR

WARNING: Before performing any maintenance or repairs, place the deck engagement/lift lever in the BLADES STOP position, move shift lever into neutral position, set parking brake, stop engine and remove key to prevent unintended starting.

Cleaning the Engine And Deck

Any fuel or oil spilled on the machine should be wiped off promptly. Do NOT allow debris to accumulate around the cooling fins of the engine or on any other part of the machine, especially the belts, pulleys and other moving parts. Clean the underside of the deck with a wisk broom, scraper or forced air after each mowing.

IMPORTANT: The use of a pressure washer or garden hose to clean your tractor is NOT recommended. It may cause damage to electrical components, spindles, pulleys, bearings or the engine. The use of water will result in a shortened life of the tractor and reduce its serviceability.

Engine

Refer to the *Briggs & Stratton* Operator/Owner Manual (or *Tecumseh* engine's Owner's Manual) for engine maintenance instructions.

Check **engine oil level** before each use as instructed in the ***Briggs & Stratton*** Operator/Owner Manual (or *Tecumseh* engine's Owner's Manual) packed with your unit. **Follow the instructions carefully.**

Changing Engine Oil (models equipped with an oil drain sleeve)

For draining oil from the engine's crankcase of select model tractors, a plastic oil drain sleeve is packed with this Operator's Manual. To drain the oil, proceed as follows:

- Unscrew the oil fill cap and remove the dipstick from the oil fill tube.
- Snap the small end of oil drain sleeve onto the oil sump. See Figure 21.

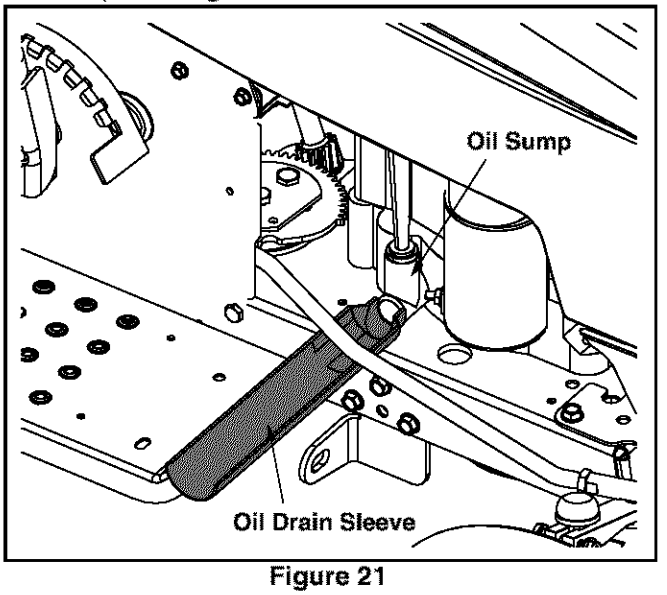

Figure 21

- Remove drain plug and drain oil into a suitable container with a capacity of no less than 64 oz.
- Service the **oil filter** (if so equipped) as instructed in the separate *Briggs & Stratton* Operator/Owner Manual (or *Tecumseh* engine's Owner's Manual) packed with your unit.

Perform the above steps in the opposite order after oil has finished draining.

- Refill the engine with new motor oil.

IMPORTANT: Refer to the *Briggs & Stratton* Operator/Owner Manual (or *Tecumseh* engine's Owner's Manual) packed with your unit for information regarding the quantity and proper weight of motor oil.

Changing Engine Oil (models equipped with an oil drain valve)

NOTE: *Depending on your tractor's engine make & model, it may be necessary to remove the tractor's side panel in order to replace the oil filter (if so equipped).*

https://truckmanualshub.com/

- Unscrew the oil fill cap and remove the dipstick from the oil fill tube. See Figure 22.

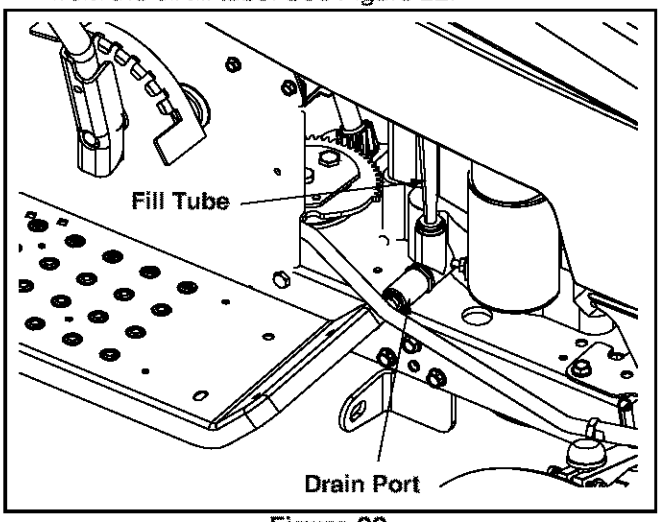

Figure 22

- Pop open the protective cap on the end of the oil drain valve to expose the drain port. See Figure 22.
- Push the oil drain hose (packed with this manual) onto the oil drain port. Route the opposite end of the hose into an appropriate oil collection container with a capacity of no less than 64 oz.
- Push the oil drain valve in slightly, then rotate counterclockwise and pull outward to begin draining oil.
- Service the **oil filter** (if so equipped) as instructed in the separate *Briggs & Stratton* Operator/Owner Manual (or *Tecumseh* engine's Owner's Manual) packed with your unit.

Perform the above steps in the opposite order after oil has finished draining.

- Refill the engine with new motor oil.

IMPORTANT: Refer to the *Briggs & Stratton* Operator/Owner Manual (or *Tecumseh* engine's Owner's Manual) packed with your unit for information regarding the quantity and proper weight of motor oil.

Air Cleaner

Service the pre-cleaner, if so equipped, and cartridge/air cleaner element as instructed in the *Briggs & Stratton* Operator/Owner Manual (or *Tecumseh* engine's Owner's Manual) packed with your unit.

Fuel Filter

Service the fuel filter, if so equipped, as instructed in the *Briggs & Stratton* Operator/Owner Manual (or *Tecumseh* engine's Owner's Manual) packed with your unit.

Spark Plug(s)

The spark plug(s) should be cleaned and the gap reset once a season. Spark plug replacement is recommended at the start of each mowing season. Refer to the *Briggs & Stratton* Operator/Owner Manual (or *Tecumseh* engine's Owner's Manual) for correct plug type and gap specifications.

Lubrication

WARNING: Before lubricating, repairing, or inspecting, always disengage PTO, move shift lever into neutral position, set parking brake, stop engine and remove key to prevent unintended starting.

Engine

Lubricate the engine with motor oil as instructed in the *Briggs & Stratton* Operator/Owner Manual (or *Tecumseh* engine's Owner's Manual) packed with your unit.

Rear Wheels

The rear wheels should be removed from the axles once a season. Lubricate the axles and the rims well with an all-purpose grease before re-installing them.

Front Axles

Each end of the tractor's front pivot bar may be equipped with a grease fitting. If so equipped, lubricate with a grease gun after every 25 hours of tractor operation.

Pivot Points & Linkage

Lubricate all the pivot points on the drive system, clutch-brake pedal and lift linkage at least once a season with light oil.

Steering Shaft and Gear

Lubricate teeth of steering gears with automotive multi-purpose grease after every 25 hours of operation or once a season. See Figure 23.

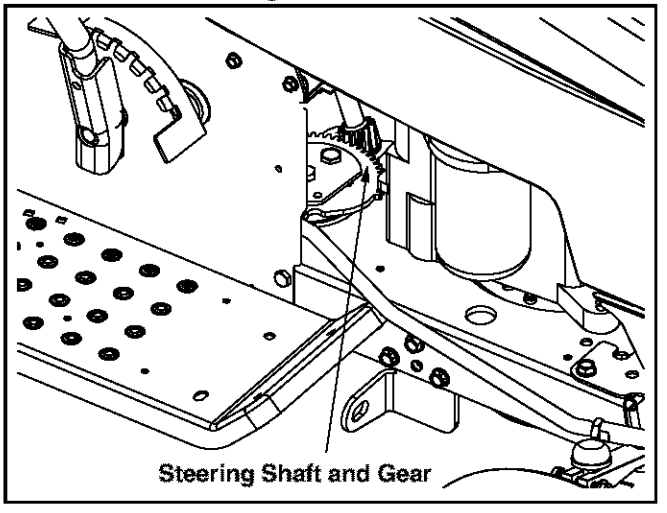

Figure 23

https://truckmanualshub.com/

SECTION 8: SERVICE

WARNING: Disconnect the spark plug wire and ground against the engine before performing any adjustments, repairs or maintenance.

Cutting Deck Removal

WARNING: Shut the engine off, remove ignition key, set the parking brake, disconnect the spark plug wire(s) and ground against the engine to prevent unintended starting before removing the cutting deck.

WARNING: Always wear safety glasses or safety goggles to protect your eyes while removing the cutting deck.

For performing service on your tractor and in order to properly mount some (separately available) attachments, it may be necessary to remove the tractor's cutting deck. To due so, proceed as follows:

- Place the deck engagement/lift lever in the engaged (all the way forward) position.
- Using a spring puller (*MTD* Part No. 732-0571)or other suitable tool, disconnect the spring which is attached to a small hook found on the left, rear portion of the transmission. See Figure 24.
- Place the deck engagement/lift lever in the BLADES STOP position.
- Locate the two belt keeper pins, found on either side of the engine pulley, and use a 1/4-inch socket wrench to remove them from the lower frame. See Figure 25.

NOTE: *When reassembling, make certain belt keeper pins are assembled in the same locations from which they were removed.*

- Unpile the deck belt from around the engine pulley.Return the deck engagement/lift lever to the engaged (all the way forward) position.
- Locate the deck anti-sway rod and adjustable deck links found near the front of the cutting deck. See Figure 25 & Figure 26.
- First remove the hairpin clip which secures the anti-sway rod to the front portion of the cutting deck, then remove the hairpin clips which secure the adjustable deck hangers. Retain the hairpin clips.
- Carefully lower the front portion of the deck to the ground.

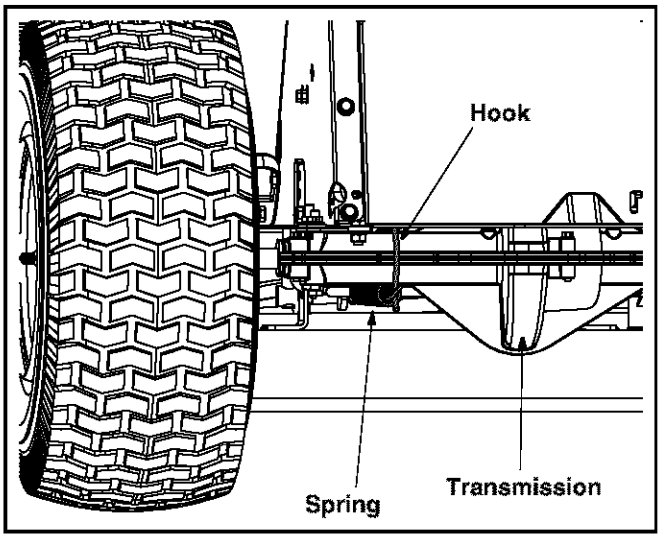

Figure 24

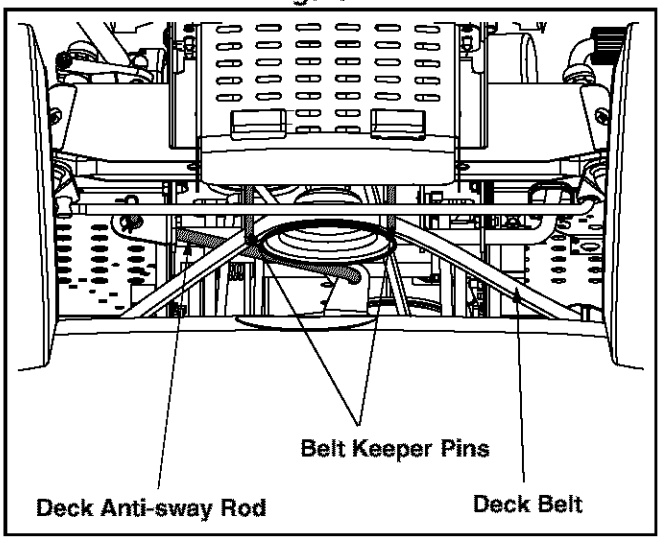

Figure 25

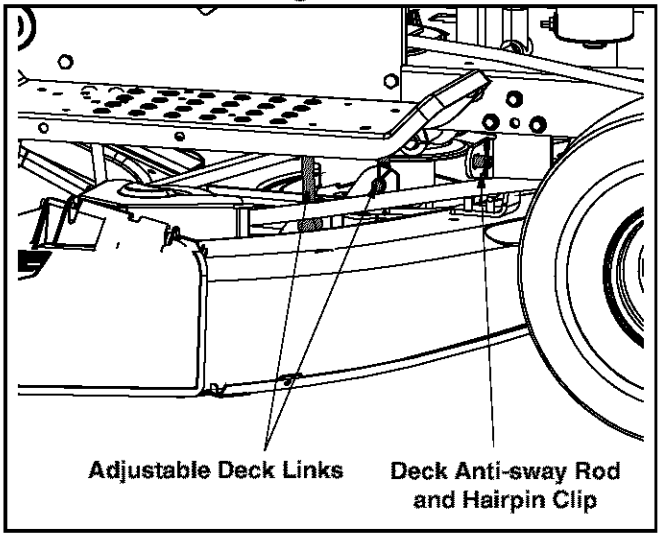

Figure 26

https://truckmanualshub.com/

- Remove the hairpin clips which secure the rear deck hangers to the deck stabilizer bracket. See Figure 27. Retain the hairpin clips.

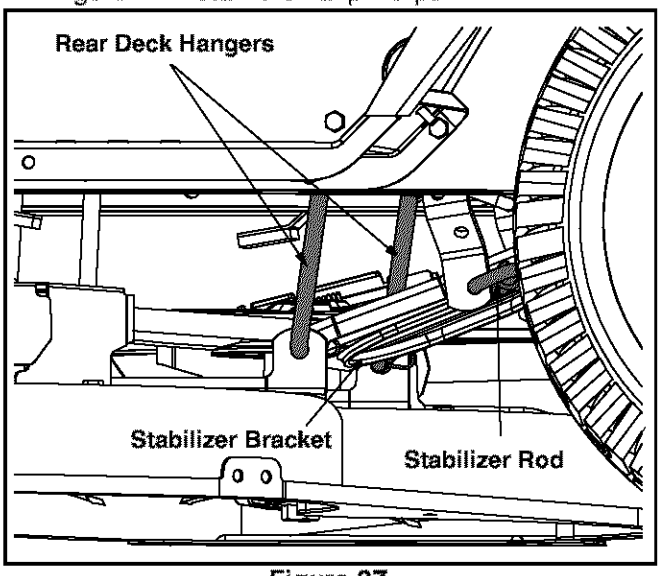

Figure 27

- Carefully lower the rear portion of the deck to the ground.

NOTE: *For normal service and maintenance, the deck stabilizer bracket doesn't need to be removed from the tractor. If removing the cutting deck in order to mount a Snow Thrower attachment, however, the stabilizer bracket must be removed. To do so, simply remove the hairpin clip which secures the stabilizer rod to the stabilizer bracket. See Figure 27.*

- Place the deck engagement/lift lever in the BLADES STOP position to raise the lift links up, and out of the way.
- Carefully slide the deck from beneath the right side of the lawn tractor.

Cutting Blades

WARNING: Be sure to shut the engine off, remove ignition key, disconnect the spark plug wire(s) and ground against the engine to prevent unintended starting before removing the cutting blade(s) for sharpening or replacement. Protect your hands by using heavy gloves or a rag to grasp the cutting blade.

WARNING: Periodically inspect the blade adapter and/or spindle for cracks or damage, especially if you strike a foreign object. Replace immediately if damaged.

The blades may be removed as follows.

- Remove the deck from beneath the tractor, (refer to **Cutting Deck Removal** on page 22) then gently flip the deck over to expose its underside.
- Place a block of wood between the center deck housing baffle and the cutting blade to act as a stabilizer. See Figure 28.

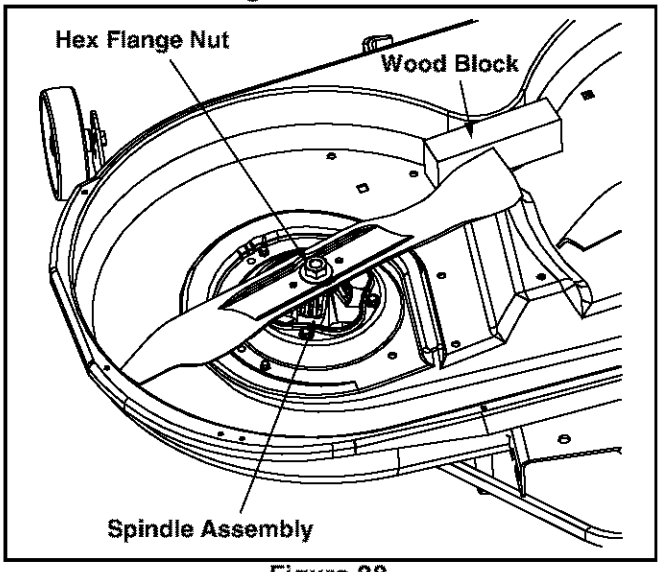

Figure 28

- Use a 15/16" wrench to remove the hex flange nut that secures the blade to the spindle assembly. See Figure 28.

To properly sharpen the cutting blades, remove equal amounts of metal from both ends of the blades along the cutting edges, parallel to the trailing edge, at a 25° to 30° angle. See Figure 29.

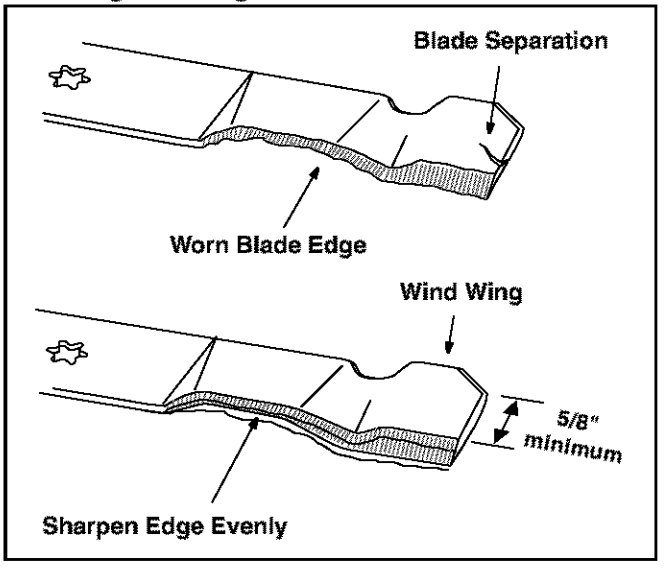

Figure 29

IMPORTANT: If the cutting edge of the blade has already been sharpened to within 5/8" of the wind wing radius, or if any metal separation is present, replace the blades with new ones. See Figure 29.

https://truckmanualshub.com/

It is important that each cutting blade edge be ground equally to maintain proper blade balance. A poorly balanced blade will cause excessive vibration and may cause damage to the tractor and result in personal injury.

The blade can be tested by balancing it on a round shaft screwdriver. Grind metal from the heavy side until it balances evenly.

When replacing the blade, be sure to install the blade with the side of the blade marked "Bottom" (or with a part number stamped in it) facing the ground when the mower is in the operating position.

IMPORTANT: Use a torque wrench to tighten the blade spindle hex flange nut to between 70 foot-pounds and 90 foot-pounds.

Battery

The battery is sealed and is maintenance-free. Acid levels cannot be checked.

- Always keep the battery cables and terminals clean and free of corrosive build-up.
- After cleaning the battery and terminals, apply a light coat of petroleum jelly or grease to both terminals
- Always keep the rubber boot positioned over the positive terminal to prevent shorting.

IMPORTANT: If removing the battery for any reason, disconnect the NEGATIVE (Black) wire from it's terminal first, followed by the POSITIVE (Red) wire. When re-installing the battery, always connect the POSITIVE (Red) wire its terminal first, followed by the NEGATIVE (Black) wire. Be certain that the wires are connected to the correct terminals; reversing them could change the polarity and cause damage to your engine's alternating system.

Charging

If the tractor has not been put into use for an extended period of time, charge the battery with an automotive-type 12-volt charger for a minimum of **one hour at six amps**.

WARNING: Batteries give off an explosive gas while charging. Charge battery in a well ventilated area and keep away from an open flame or pilot light as on a water heater, space heater, furnace, clothes dryer or other gas appliances.

Jump Starting

WARNING: When removing or installing the battery, follow these instructions to prevent the screwdriver from shorting against the frame.

IMPORTANT: Never jump your tractor's dead battery with the battery of a running vehicle.

- Connect end of one jumper cable to the positive terminal of the good battery, then the other end to the positive terminal of the dead battery.
- Connect the other jumper cable to the negative terminal of the good battery, then to the **frame of the unit with the dead battery**.

WARNING: Failure to use this procedure could cause sparking, and the gas in either battery could explode.

Cleaning

Clean the battery by removing it from the tractor and washing with a baking soda and water solution. If necessary, scrape the battery terminals with a wire brush to remove deposits. Coat terminals and exposed wiring with grease or petroleum jelly to prevent corrosion.

Battery Failures

Some common causes for battery failure are:

- incorrect initial activation
- overcharging
- freezing
- undercharging
- corroded connections

These failures are NOT covered by your tractor's warranty.

Tires

Recommended operating tire pressure is approximately 10 p.s.i. Maximum tire pressure under any circumstances is 30 p.s.i. Equal tire pressure should be maintained on all tires.

When installing a tire to the rim, be certain rim is clean and free of rust. Lubricate both the tire and rim generously. **Never** inflate to over 30 p.s.i. to seat beads.

WARNING: Excessive pressure (over 30 p.s.i.) when seating beads may cause tire/rim assembly to burst with force sufficient to cause serious injury.

Belt Replacement

WARNING: Shut the engine off, remove ignition key, set the parking brake, disconnect the spark plug wire(s) and ground against the engine to prevent unintended starting before replacing belts.

For performing service on your tractor and in order to properly mount some (separately available) attachments, it may be necessary to remove the tractor's cutting deck. To due so, proceed as follows:

https://truckmanualshub.com/

Deck Belt (38- and 42-inch Decks)

WARNING: Shut the engine off, remove ignition key, set the parking brake, disconnect the spark plug wire(s) and ground against the engine to prevent unintended starting before removing the cutting deck.

WARNING: Always wear safety glasses or safety goggles to protect your eyes while removing the cutting deck.

- Remove the cutting deck from the tractor (Refer to **Cutting Deck Removal** on page 22, for detailed instructions).
- Remove the belt guards (located over each spindle pulley) by removing the self-tapping screws which secure them in place. See Figure 30.
- Remove and replace the belt, reassemble following the instructions in reverse order.

Deck Belts (46" Deck)

- Remove the cutting deck from the tractor (Refer to **Cutting Deck Removal** on page 22, for detailed instructions)

NOTE: *On 46-inch decks, you must also remove both the deck stabilizer bracket and the stabilizer rod . To do so, remove the hairpin clip which secures the stabilizer rod to the stabilizer bracket. See Figure 31.*

- After the deck is removed (and the stabilizer bracket and rod), the upper deck belt can be simply lifted off of the double-pulley located in the rear, center of the cutting deck.

To remove the lower deck belt:

- Follow all steps above for removing the upper deck belt.
- Remove the belt guards (located over each outer spindle pulley) by removing the self-tapping screws which secure them in place. Refer Figure 30
- Using a spring puller (Part No. 732-0571)or other suitable tool, disconnect the extension spring from the rear of the cutting deck belt. This will relieve tension on the lower deck belt.
- Remove the lower deck belt from around the idler pulleys, and the three spindle pulleys.
- Reassemble new belts, following instructions in reverse order.

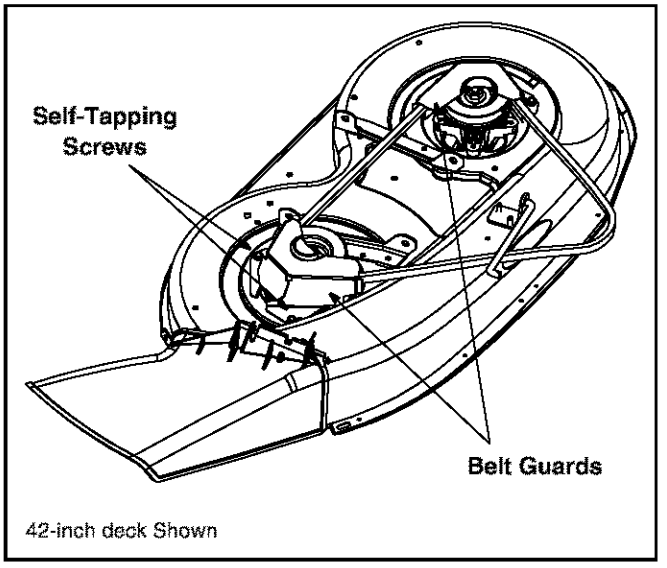

Figure 30

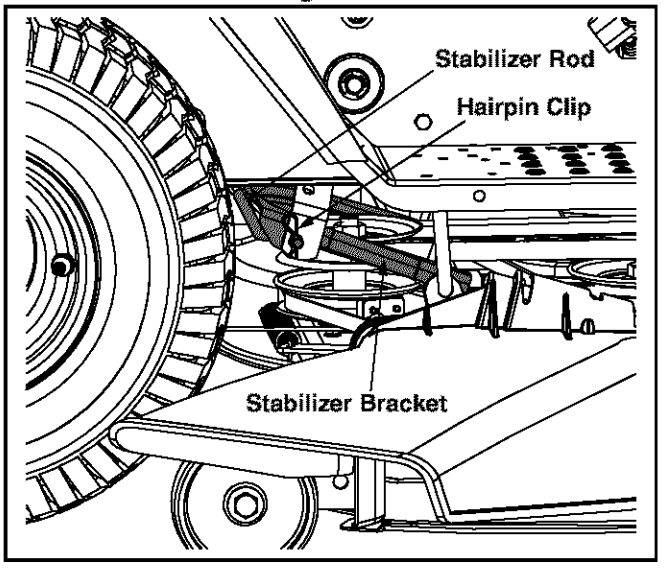

Figure 31

https://truckmanualshub.com/

Drive Belts (Upper and Lower)

NOTE: *The engine pulley must be removed from the engine's crankshaft in order to change the tractor's drive belts.* ***Doing so requires an air/impact wrench.***

It is recommended that both belts be changed at the same time.

- Place the deck engagement/lift lever in the engaged (all the way forward) position.
- Unthread the shift knob and remove the two flange screws which secure the shift cover panel in place. Refer to Figure 15. Remove the shift cover panel.

NOTE: *There is a small yellow wire connected to a spring switch on the underside of the shift cover panel. Be careful not to damage it when removing the panel*

- Using a spring puller (*MTD* Part No. 732-0571)or other suitable tool, disconnect the spring which is attached to a small hook found on the left, rear portion of the transmission. Refer to Figure 24.
- Using a spring puller (*MTD* Part No. 732-0571)or other suitable tool, disconnect the two springs which are attached to the rear portion of the tractor frame. See to Figure 32.
- Place the deck engagement/lift lever in the BLADES STOP position.
- Locate the two belt keeper pins, found on either side of the engine pulley, and use a 1/4-inch socket wrench to remove them from the lower frame. Refer to Figure 25.

NOTE: *When reassembling, make certain belt keeper pins are assembled in the same locations from which they were removed.*

- Using an impact gun with a 5/8-inch socket, remove the hex screw with secures the engine pulley to the engine crankshaft.
- Carefully lower the pulley off of the crankshaft and remove the belt from around it.
- Disconnect the battery cables from the terminals (disconnect the NEGATIVE (Black) wire from it's terminal first, followed by the POSITIVE (Red) wire).
- Detach the battery hold-down rod and remove both the battery and battery tray from the tractor.
- Locate the transmission pulley though the battery tray opening. See Figure 33.
- Using an impact gun with a 13/16-inch socket, remove the pulley from the transmission's input shaft by removing the flange nut which secures it
- Carefully lift the pulley off of the transmission's input shaft and remove the upper drive belt from around it and the variable speed.

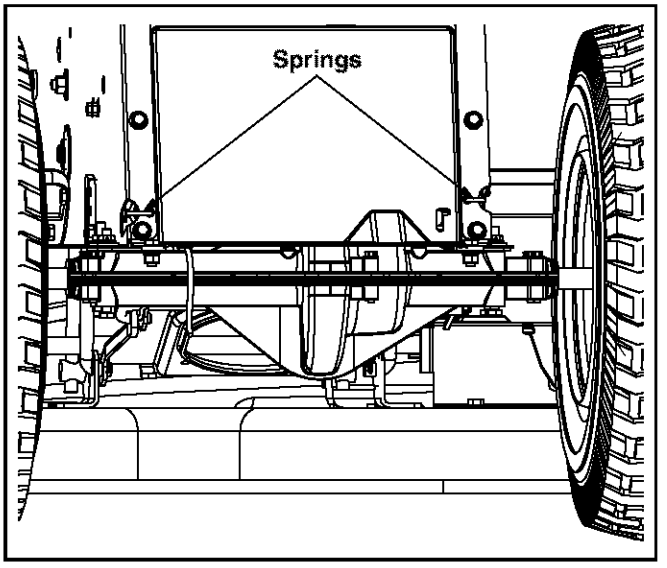

Figure 32

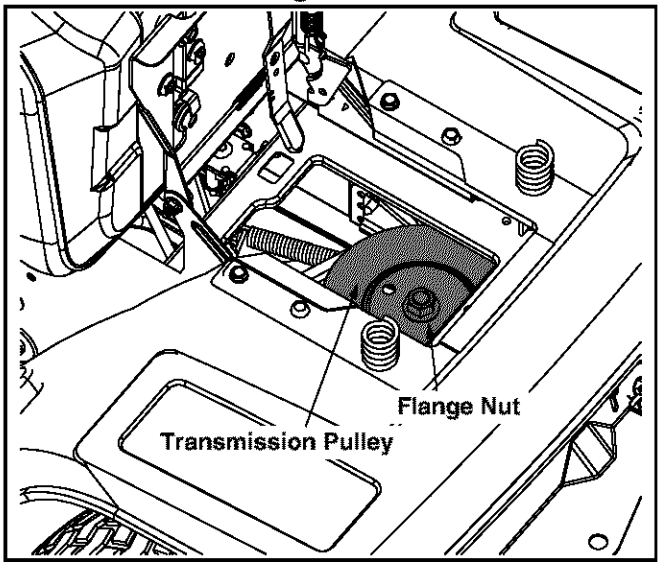

Figure 33

NOTE: *A spacer is located beneath the transmission pulley. Be careful not to lose the spacer and be certain NOT reinstall the spacer upside down.*

- Remove the lower drive belt from around the lower portion of the variable speed pulley and feed it toward the shift cover panel opening.
- Remove the lower drive belt by lifting it through the cover panel opening.
- Reassemble new belts, following the previous instructions in reverse order.

IMPORTANT: When remounting the engine pulley, torque the hex bolt to between 38 foot-pounds and 50 foot-pounds.

IMPORTANT: When remounting the transmission pulley, torque the flange nut to between 25 foot-pounds and 33 foot-pounds.

https://truckmanualshub.com/

SECTION 9: OFF-SEASON STORAGE

WARNING: Never store the machine or fuel container indoors where there is an open flame, spark or pilot light such as on water heater, furnace, clothes dryer or other gas appliance.

WARNING: Use a fuel stabilizer additive or drain the fuel into an approved container outdoors, away from an open flame. Allow engine to cool. Extinguish cigarettes, cigars, pipes, and other sources of ignition prior to draining fuel. Fuel left in engine without a stabilizer additive for extended periods deteriorates and will cause problems.

If the machine is to be inoperative for a period longer than 30 days, prepare for storage as follows.

- Clean the engine and the entire unit thoroughly.
- We do not recommend the use of pressure washers or garden hose to clean your unit. They may cause damage to electric components, spindles, pulleys, bearings or the engine. The use of water will result in shortened life and reduce serviceability.
- Lubricate all lubrication points. Wipe the entire machine with an oiled rag to protect the surfaces.
- Refer to the engine manual for correct engine storage instructions. The engine must be completely drained of fuel to prevent gum deposits from forming on essential carburetor parts, fuel lines and fuel tanks.

Charge battery fully. The battery loses some of its charge each day when the unit is not used.
NEVER store battery without a full charge. Recharge battery before returning to service or every two months, whichever occurs first.

- When storing unit for extended periods, disconnect battery cables. Removing battery from unit is recommended.
- Store unit in a clean, dry area. Do not store next to corrosive materials, such as fertilizer.

NOTE: *When storing any type of power equipment in an unventilated or metal storage shed, care should be taken to rustproof the equipment. Using a light oil or silicone, coat the equipment, especially any chains, springs, bearings and cables.*

SECTION 10: ATTACHMENTS & ACCESSORIES

The following attachments and accessories are compatible for **Lawn Tractor Models 660-688**. See the retailer from which you purchased your tractor, an authorized service dealer or phone **1- (866) 840-6483** for information regarding price and availability.

NOTE: *Lawn tractor models 660-688 are NOT designed for use with any type of ground-engaging attachments (e.g. tiller or plow). Use of this type of equipment WILL void the tractor's warranty.*

MODEL	DESCRIPTION
OEM-190-116	42-inch Deck Mulch Kit
OEM-190-118	46-inch Deck Mulch Kit
OEM-190-180	Twin Bagger Grass Collector (for 38- and 42-inch Decks)
OEM-190-182	Twin Bagger Grass Collector (for 46-inch Decks)
OEM-190-215	Rear Wheel Weights (Two per set)
OEM-190-226	Front Bumper Kit
OEM-190-620	46-inch Front Dozer Blade
OEM-190-627	42-inch Two-stage Snow Thrower
OEM-190-916	Tire Chains, for 20" x 10.0" tires (Two per set)
OEM-190-658	Tire Chains, for 20" x 8.0" tires (Two per set)
OEM-190-657	Tire Chains, for 18" x 9.5" tires (Two per set)
OEM-190-754	Tire Chains, for 18" x 8.5" tires (Two per set)
OEM-190-664	Tire Chains, for 18" x 6.5" tires (Two per set)
OEM-190-808	Deluxe Tractor Sunshade

https://truckmanualshub.com/

SECTION 11: TROUBLE SHOOTING GUIDE

Trouble	Possible Cause(s)	Corrective Action
Engine will not crank	Safety switch button not depressed.	There are two switches in the starting circuit of your unit: the clutch pedal switch and the deck engagement/lift lever switch. Make certain the actuator is fully depressing the buttons on each switch.
	Battery installed incorrectly.	The battery must be installed with negative terminal attached to black ground wire. Negative terminal is identified at the post by "NEG", "N" or "-". The positive terminal, identified by "POS", "P" or "+", must be attached to the big red wire which goes to the solenoid. All batteries are to be fully charged before installing. Refer to "Quick Start" battery guide that came with the operator's manual.
	Battery is dead or weak.	Check fluid level in battery. If fluid is low, fill to just below split rings with water. Charge with 6 AMP charger until fully charged.
	Blown fuse or circuit breaker.	Refer to operator's manual for fuse box location. Replace fuse with automotive type fuse. Fuses seldom fail without a reason. The problem must be corrected. Check for loose connections in the fuse holder. Replace fuse holder if necessary. A dead short may be in the cranking or charging circuit where the insulation may have rubbed through and exposed the bare wire. Replace the wire or repair with electrician's tape if the wire strands have not been damaged. Note: Look for a wire pinched between body panels, burned by the exhaust pipe or muffler or rubbed against a moving part.
	Engine ground wire loose.	Engine should have a black ground wire running from engine to frame or mounting bolt.
Engine cranks but will not start	Throttle or choke not in starting position.	Check operator's manual for correct position for throttle control and choke for starting.
	No fuel to the carburetor.	Gasoline tank empty. Fill. Fuel line or in-line fuel filter plugged. Remove and clean fuel line. Replace filter if necessary.
	No spark to spark plug.	Spark plug lead disconnected. Connect lead. Faulty spark plug. To test, remove spark plug. Attach spark plug lead to spark plug. Ground the spark plug body against the engine block. Crank the engine. The spark plug should fire at the electrode. Replace if it does not.
	Dirty air cleaner.	If the air cleaner is dirty, the engine may not start. Refer to the engine manual packed with your unit.
Engine smokes	Engine oil has been overfilled.	Check oil level.
	Engine loses crankcase vacuum.	Dipstick not seated or broken. Replace defective part. Engine breather defective. Replace.
Excessive vibration	Bent or damaged blade.	Stop engine immediately. Check all pulleys, blade adapters, keys and bolts for tightness and spindle damage. Tighten or replace any damaged parts.
	Bent blade.	Stop engine immediately. Replace damaged blade. Only use original equipment blades.
Mower will not discharge grass or leaves uncut strips	Engine speed low.	Throttle must be set at full throttle.
	Speed selection.	Use lower ground speed. The slower your ground speed, the better the quality of cut.
	Cutting height set too low.	Raise deck.
	Blades short or dull.	Sharpen or replace blades (uncut strip problem only).

NOTE: *For repairs beyond the minor adjustments above, contact an authorized service dealer.*

https://truckmanualshub.com/

NOTES

https://truckmanualshub.com/

NOTES

https://truckmanualshub.com/

NOTES

https://truckmanualshub.com/

MANUFACTURER'S LIMITED WARRANTY FOR:

TROY-BILT®

The limited warranty set forth below is given by Troy-Bilt LLC with respect to new merchandise purchased and used in the United States, its possessions and territories.

Troy-Bilt LLC warrants this product against defects for a period of two (2) years commencing on the date of original purchase and will, at its option, repair or replace, free of charge, any part found to be defective in materials or workmanship. This limited warranty shall only apply if this product has been operated and maintained in accordance with the Operator's Manual furnished with the product, and has not been subject to misuse, abuse, commercial use, neglect, accident, improper maintenance, alteration, vandalism, theft, fire, water, or damage because of other peril or natural disaster. Damage resulting from the installation or use of any accessory or attachment not approved by Troy-Bilt LLC for use with the product(s) covered by this manual will void your warranty as to any resulting damage.

Normal wear parts or components thereof are subject to separate terms as follows: All normal wear parts or component failures will be covered on the product for a period of 90 days regardless of cause. After 90 days, but within the two year period, normal wear part failures will be covered ONLY IF caused by defects in materials or workmanship of OTHER component parts. Normal wear parts and components include, but are not limited to: batteries, belts, blades, blade adapters, grass bags, rider deck wheels, seats, snow thrower skid shoes, shave plates, auger spiral rubber, and tires.

HOW TO OBTAIN SERVICE: Warranty service is available, WITH PROOF OF PURCHASE, through your local authorized service dealer. To locate the dealer in your area, check your Yellow Pages, or contact Troy-Bilt LLC at P.O. Box 361131, Cleveland, Ohio 44136-0019, or call 1-866-840-6483 or 1-330-558-7220, or log on to our Web site at www.troybilt.com.

This limited warranty does not provide coverage in the following cases:

a. The engine or component parts thereof. These items carry a separate manufacturer's warranty. Refer to applicable manufacturer's warranty for terms and conditions.
b. Log splitter pumps, valves, and cylinders have a sepa rate one year warranty.
c. Routine maintenance items such as lubricants, filters, blade sharpening, tune-ups, brake adjustments, clutch adjustments, deck adjustments, and normal deterioration of the exterior finish due to use or exposure.
d. Troy-Bilt LLC does not extend any warranty for products sold or exported outside of the United States, its possesions and territories, except those sold through Troy-Bilt LLC's authorized channels of export distribution.
e. Parts that are not genuine Troy-Bilt parts are not covered by this warranty.
f. Service completed by someone other than an authorized service dealer is not covered by this warranty.
g. Transportation charges and service calls are not covered.

No implied warranty, including any implied warranty of merchantability of fitness for a particular purpose, applies after the applicable period of express written warranty above as to the parts as identified. No other express warranty, whether written or oral, except as mentioned above, given by any person or entity, including a dealer or retailer, with respect to any product, shall bind Troy-Bilt LLC. During the period of the warranty, the exclusive remedy is repair or replacement of the product as set forth above.

The provisions as set forth in this warranty provide the sole and exclusive remedy arising from the sale. Troy-Bilt LLC shall not be liable for incidental or consequential loss or damage including, without limitation, expenses incurred for substitute or replacement lawn care services or for rental expenses to temporarily replace a warranted product.

Some states do not allow the exclusion or limitation of incidental or consequential damages, or limitations on how long an implied warranty lasts, so the above exclusions or limitations may not apply to you.

In no event shall recovery of any kind be greater than the amount of the purchase price of the product sold. **Alteration of safety features of the product shall void this warranty.** You assume the risk and liability for loss, damage, or injury to you and your property and/or to others and their property arising out of the misuse or inability to use the product.

This limited warranty shall not extend to anyone other than the original purchaser or to the person for whom it was purchased as a gift.

HOW STATE LAW RELATES TO THIS WARRANTY: This limited warranty gives you specific legal rights, and you may also have other rights which vary from state to state.

Troy-Bilt LLC, P.O. BOX 361131 CLEVELAND, OHIO 44136-0019; Phone: 1-866-840-6483, 1-330-558-7220