https://truckmanualshub.com/

Extreme off-road Unimog BlueTec 6
Technical Manual

August 2014 issue

Mercedes-Benz
Trucks you can trust

https://truckmanualshub.com/

Technical Manual for extreme off-road Unimog BlueTec 6

The present Technical Manual serves Unimog Sales as an advisory document. In addition to the basic vehicle version, special equipment is also covered. Regarding the availability of standard and special equipment, please refer to the applicable price lists. Subject to technical modifications without notice. All rights reserved. Reprinting or reproduction in electronic form, including excerpts, is prohibited and requires the approval of Mercedes-Benz Special Trucks.

The latest changes and additions are available through our updates on the Extranet at:

www.specialtrucks-extranet.com

Daimler AG
Mercedes-Benz Special Trucks
Sales & Marketing

August 2014 issue

Part A

Concept and sales reasoning

Part B

Technical data

https://truckmanualshub.com/

Contents – Part A

Overview of models and components **6**

Product concept **7**
Unimog model series in comparison 7
Extreme off-road capability 8
The Unimog concept for extreme torsional flexibility 9
Angle of approach / departure and ramp breakover angle 10
Fording capability 11
Optional equipment – fording capability 12

Frame **13**
Frame concept 13
Optional equipment – frame 15

Engine **17**
Engine concept 17
Drive clutch 19
High-performance engine brake 20
Engine control 20
Exhaust gas aftertreatment – BlueTec 6 21
Exhaust emissions – limiting values 23
Regeneration 24
Radiator system 25
Optional equipment – engine 26

Transmission **27**
Main transmission 27
Overview 28
Engine management 29
Electronic Quick Reverse (EQR) 30
Optional equipment – transmission 31

Axles **33**
Portal axles 33
Axle suspension 35
Torque tube technology 36
Drive system 37
Single tyres 38
Optional equipment – axles 39

Brakes **43**
Dual-circuit braking system 43
4-channel ABS 44
Optional equipment – brakes 45

Steering **46**
Power steering 46
Optional equipment – steering 47

https://truckmanualshub.com/

Cab exterior **48**
Cab concept 48
Doors 49
Safety 50
Optional equipment – cab exterior 51

Cab interior **54**
Spaciousness 54
Controls 55
Steering and gear-changing 56
Instrumentation 57
Standard controls 58
Air conditioning, heating and ventilation system 59
Optional equipment – cab interior 60

Auxiliary drives **64**
Location 64
Optional equipment – power take-offs 65

Hydraulics **68**
Overview of hydraulic system 68
Optional equipment – hydraulic system 69

Electrical system **71**
Electronic networking 71
Optional equipment – electrical system 72

Attachment and mounting areas **77**
Locations of attachment and mounting areas 77
Mounting areas 78
Optional equipment – mounting areas 79

https://truckmanualshub.com/

Contents – Part B

Engine **86**
Engine data – OM934 86
Engine diagram – OM934 87
Filling capacities 88
Engine brake 88
Compressed air generation 89

Transmission **90**
Main transmission 90
Clutch 90
Vehicle speeds – U 4023 / U 5023 91
Vehicle speed conversion factor 92

Axles **93**
Suspension 93
Technical data on axles 93
Technical data on U 4023 rims 94
Technical data on U 5023 rims 95

Brakes **96**
Braking system 96

Cab exterior **97**
Exterior 97

Cab interior **98**
Interior 98

Auxiliary drives **99**
[N05] Engine PTO to rear, with flange 99
[N13]/[N16]/[N19] Transmission PTO 100

Hydraulics **101**
Technical data on single hydraulic system 101

Electrical system **102**
On-board electrical system 102
Lights 102

https://truckmanualshub.com/

Weights **103**
Permissible load values 103

Trailer operation **104**
Pin-type trailer hitch 104
Hook-type trailer hitch (not for civilian use) 104
Towing capacities – U 4023, model designation 437.427, 170 kW 105
Towing capacity U 5023, model designation 437.437, 170 kW 106

Wheels/tyres **107**
Tyre availability 107
Tyres (technical data) 108
Tyre load capacity 109
Speed allocations 110
MPT (multi-purpose tyres) 112
AS tyres 114

Dimensions **115**
Technical drawing for U 4023 BlueTec 6, model designation 437.427 115
Technical drawing for U 5023 BlueTec 6, model designation 437.437 116

General information **117**
Vehicle climbing resistance 117
Trailer climbing resistance 117
Tractive force diagram – U 4023 (8.8 t) 118
Tractive force diagram – U 4023 (10.3 t) 118
Tractive force diagram – U 5023 (14.1 t) 119
Tractive force diagram – U 5023 (14.5 t) 119

https://truckmanualshub.com/

Overview of models and components

Model name	Model designation	Wheelbase (mm)	Engine	Output (kW/hp)	No. of cylinders	Permissible gross vehicle weight: Variants (t)
U 4023	437.427	3850	OM934	170/231	4	7.5 / 8.0 / 8.8 / 9.8 / 10.3
U 5023	437.437	3850	OM934	170/231	4	12.5 / 12.7 / 13.0 / 14.1 / 14.5

https://truckmanualshub.com/

Product concept

Unimog model series in comparison

Unimog Implement Carrier BlueTec 6

- Compact all-terrain Unimog implement carrier
- Vehicle type: tractor unit/truck
- Vehicle width: from 2.15 m
- Wheelbases: 2800 mm – 3900 mm
- Straight, dimensionally stable and weight-optimised ladder-type frame
- Panoramic cab with large windscreen and low instrument support
- 4+3 implement mounting areas
- Extensive hydraulics package
- Mechanical engine and transmission PTOs
- Permanent all-wheel drive, differential locks engageable

Extreme off-road Unimog BlueTec 6

- Extreme off-road Unimog chassis
- Vehicle type: truck chassis
- Vehicle width: from 2.3 m
- Wheelbase: 3850 mm
- Dropped, flexible and torsionally flexible frame
- Cab-behind-engine truck with raised windscreen
- Long body length for greater load volume
- Integrated hydraulics system available
- Mechanical engine and transmission PTOs
- Rear axle drive, all-wheel drive and differential locks engageable

Unimog Implement Carrier BlueTec 6

Extreme off-road Unimog BlueTec 6

https://truckmanualshub.com/

Extreme off-road capability

Feature

- Heavy-duty, torsionally flexible frame

- Portal axle with asymmetric differential arrangement
- Axle location via torque tube technology, coil springs and transverse control arms

- Fording capability

- Atmospheric pressure equalisation of components
- Short frame overhangs at front and rear
- Low vehicle centre of gravity
- All-wheel drive and differential locks engageable and disengageable via dog clutch while on the move

Advantage

- Good flexibility off-road on steep inclines and rough surfaces

- Large ground clearance when driving over obstacles
- Extreme diagonal torsional flexibility
- Central load application and bracing on gearbox
- Protection for drive shafts
- Enables fording of water to a depth of 80 cm (standard) / 120 cm [Z16]
- No excess pressure in components
- Large angle of approach/departure and ramp breakover angle
- High climbing and tipping angle
- High tractive power available at all times
- 100 % locking effect
- No interruption in tractive power, no stopping

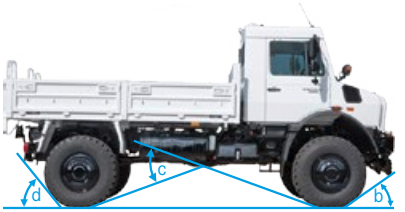

	U 4023	U 5023
a) Ground clearance (mm)	410	460
b) Angle of approach (°)	42	46
c) Ramp breakover angle (°)	32	36
d) Angle of departure (°)	46	50
e) Tipping angle (°)	38	38

Angle not dependent on load condition or tyres.

https://truckmanualshub.com/

The Unimog concept for extreme torsional flexibility

Driving over obstacles optimised by asymmetric arrangement of the axle differentials

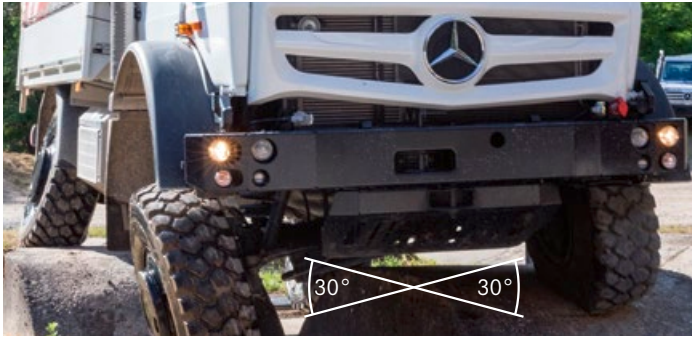

Major axle articulation made possible by torque tube concept and coil springs

Driving over sharp crests possible thanks to large ramp breakover angle and angle of approach/departure

3-point mounting of engine, gearbox and cab. Double 3-point body mounting

https://truckmanualshub.com/

Angle of approach / departure and ramp breakover angle

Figures shown are static values for the chassis of a U 5023.

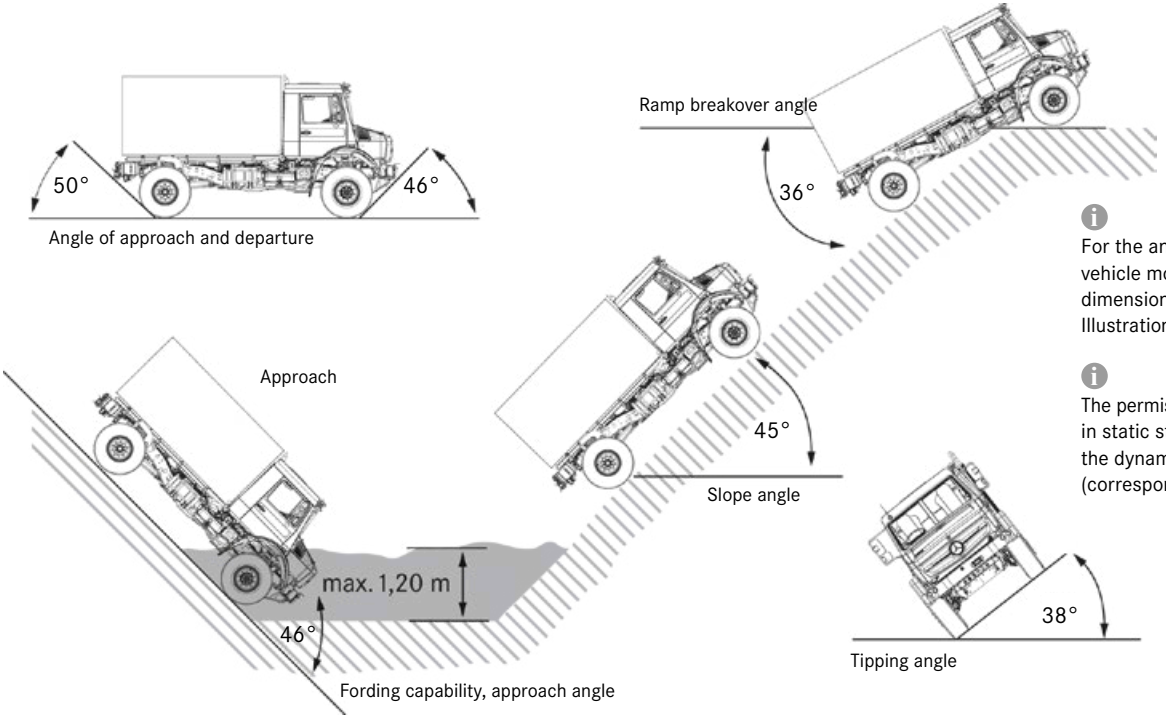

For the angles of the individual vehicle models, please refer to the dimensioned drawings in Section B. Illustrations show 365/85 R20 tyres.

The permissible roll angle is 38 degrees in static state (vehicle functional); the dynamic limit is 16.5 degrees (corresponding to 30%).

https://truckmanualshub.com/

Fording capability

Feature	Advantage
• Torque tube technology	• Enables standard fording capability to 80 cm
• Air intake pipe at level of cab roof • Large ground clearance	
• Fan with electronic viscous clutch, mechanically driven via propeller shaft, raised	• No permanent drive, fan remains operational • No damage resulting from exposure to water • No sagging of a V-belt
• Key components and electrical devices protected against splashing water	

Standard fording capability to 80 cm

https://truckmanualshub.com/

Optional equipment – fording capability

Feature	Advantage
[Z16] Special parts, fording capability	
• Raised pressure compensating lines for axles, gearbox, working gear range, torque tube, fuel tank, air drier, solenoid valves, brake system, etc.	• Enable fording capability to 120 cm • Atmospheric pressure compensation with vent lines from the components prevents entry of water and fine sand
• Waterproof main headlights with central, raised ventilation	
• New position for auxiliary heater [D6N]	• No reduction in fording capability with optional auxiliary heater

Special equipment, special parts for fording capability to 120 cm [Z16]

Recommended special equipment:

- Double sealing of wheel hubs, for operations in muddy conditions [A27]

https://truckmanualshub.com/

Frame

Frame concept

Feature

- 2 U-section longitudinal frame members with welded tubular cross-members and reinforcements in the frame profile
- Offset design, no components protruding downwards
- Robust steel bumper
- Special torsionally flexible connection flange

Advantage

- Heavy-duty, flexible and torsionally flexible frame offering high elasticity
- No permanent deformation even after extreme diagonal torsion
- Enables all four wheels to remain permanently in contact with the ground in all driving situations
- Safe and controlled off-road driving
- Installation of drive units at lowest possible point: low centre of gravity, high ground clearance
- Protection of components in off-road terrain
- Robust protection from mechanical influences in collisions
- Transmission of high torsional forces between longitudinal and transverse members

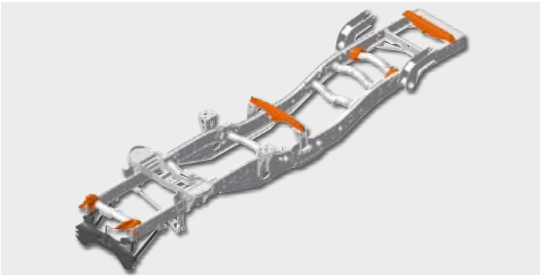

Frame with attachment fixtures for non-MB bodies [CD5], front mounting brackets [CA2], front mounting plate [CP3], cable winch brackets (CH5)

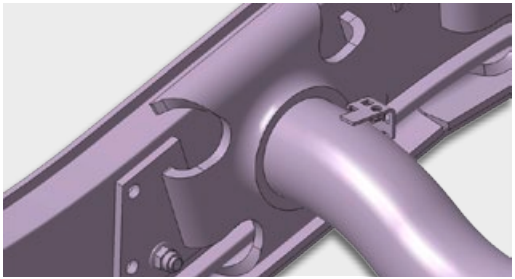

Special torsionally flexible connection flange

https://truckmanualshub.com/

Feature	Advantage
• Integrated attachment points	• Suitable for attaching heavy front- and rear-mounted implements with defined transmission of forces
• 3-point mounting of cab, engine and gearbox	• Torsion and stress-free mounting of components and bodies
• Double 3-point mounting for bodies and attached equipment	• No restriction of off-road capabilities • Equipment, attachments and bodies can be mounted in the ideal positions with regard to torsion and centre of gravity • Transmission of trust, tensile and weight forces to the intended points in the frame • Safe, secure and simple attachment and mounting of equipment

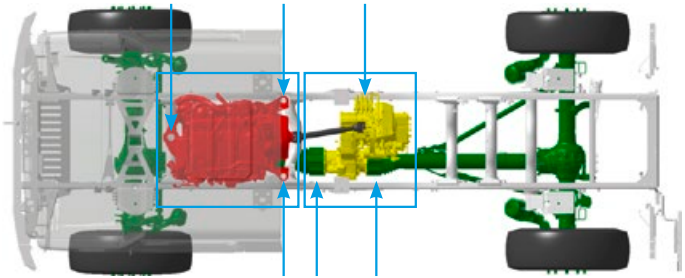

3-point mounting of engine and gearbox

Even with extreme axle articulation (30°) there is only a limited amount of twist between cab and body (12°)

https://truckmanualshub.com/

Optional equipment – frame

Feature	Advantage
[Q32] End cross-member, for increased towing capacity • Reinforced end cross-member	• Enables use of draw-bar trailers up to 15.4 t (U 4023) and 19.9 t (U 5023) • Enables use of rigid draw-bar trailers and centre-axle trailers up to 9 t (U 4023 / U 5023)
[Q35] Additional towing jaw at front, lowered • Additional trailer hitch at front	• Facilitates manoeuvring • Towing possible, e.g. with towing bar

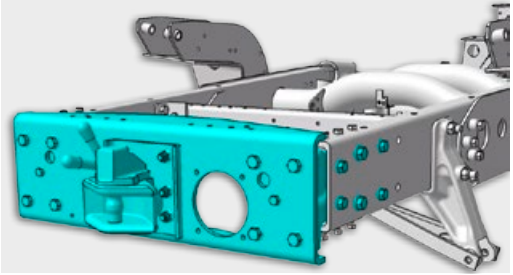

End cross-member, for increased towing capacity [Q32]

https://truckmanualshub.com/

Feature	Advantage
[Q06] Trailer coupling, larger jaw, annual spring, pin 38.5 • Jaw size 280 x 170 mm • Make, type: Ringfeder 86 G 110 • Drawbar load: 500 kg • Pin diam.: 38.5 mm • Swivelling coupling pin	• For trailer operation with 40 mm towing lug
[Q86] Trailer hitch, small jaw, Rockinger, increased load • Jaw size 200 x 100 mm • Make, type: Rockinger 225 G 110 • Drawbar load: 700 kg / 1500 kg* • Pin diam.: 38.0 mm	• For trailer operation with 40 mm towing lug • High trailer loads possible
[Q88] Trailer hitch, small jaw, Rockinger • Jaw size 200 x 100 mm • Make, type: Rockinger 227 G 110 J • Drawbar load: 500 kg / 1250 kg* • Pin diam.: 38.5 mm	• For trailer operation with 40 mm towing lug • Minimal installation space required
[Q97] Trailer hitch, large jaw, Rockinger • Jaw size 360 x 215 mm • Make, type: Rockinger 4040 G 135, version A • Drawbar load: 700 kg / 1000 kg* • Bolt Ø: 38.5 mm for 40-mm eyelets • Swivelling coupling pin	• For trailer operation with 40 mm towing lug • One-hand operation optimised • Optimisation of locking and bearing points on coupling body • 30 – 40 % longer lifespan

* Only in conjunction with [Q32].

https://truckmanualshub.com/

Engine

Engine concept

Feature

- Newly developed Mercedes-Benz 4-cylinder OM934 engine rated at 170 kW/231 hp and 5.1 l displacement
- Common rail direct injection with high injection pressures (up to 2400 bar)
- Multistage injection
- Twin-stage turbocharger
- Mercedes-Benz BlueTec 6 technology, Euro VI compliant: combined SCR technology with particulate filter and cooled exhaust gas recirculation (EGR)

Advantage

- Proven engines of the Mercedes-Benz volume series
- High power reserves
- Efficient and clean combustion
- Optimised fuel consumption
- Smooth running
- High torque even at low engine speeds
- Reduced NO_x emissions
- Reduced particulate emissions

OM934 4-cylinder engine

https://truckmanualshub.com/

Feature	Advantage
• Optimised choice of materials and manufacturing process • Extended maintenance intervals – 1400 operating hours	• Service life extended by 20 % • Extended use period, low service requirements, reduced operating costs
• High torque, max. 900 Nm	• High pulling power and holding ability of torque • High adaptability on very rough off-road terrain with steep gradients
• Optimised in-engine combustion • Air intake on right of cab at roof level	• Significantly reduced AdBlue® consumption • Intake of combustion air from area with low dust content • No entry of water into the intake during fording • Reduced soiling and extended service life for the air filter

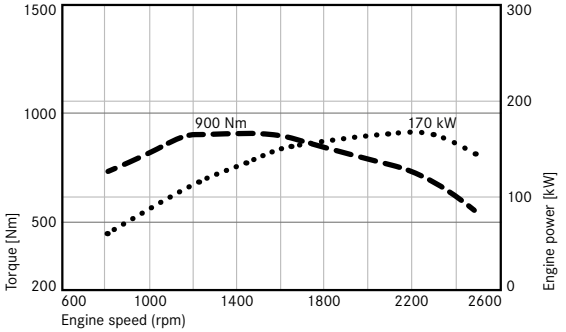

Output and torque diagram for OM934, 170 kW, 900 Nm

https://truckmanualshub.com/

Drive clutch

Feature
- 395 mm single-plate dry clutch
- Hydraulic central clutch release bearing
- Pneumatic clutch pressure booster
- Position sensor
- Wear compensation
- Aluminium clutch housing
- Organic, asbestos-free clutch linings

Advantage
- Easy to regulate, long service life
- No lubrication of moving parts necessary
- Low pedal force (approx. 150 N)
- Wear detectable without disassembly
- Secure frictional connection
- Weight optimisation
- Environmentally compatible

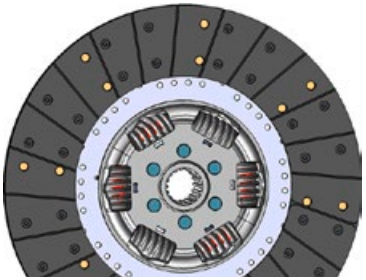
Clutch plate

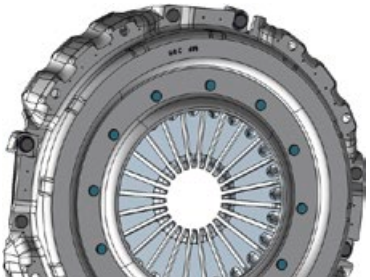
Clutch pressure plate

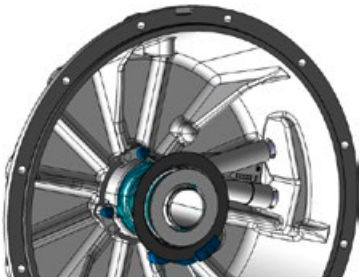
Clutch housing

https://truckmanualshub.com/

High-performance engine brake

Feature

- 2-stage decompression brake
- Control via exhaust camshaft
- Power output up to 178 kW

Advantage

- Wear-free auxiliary brake, reduces heating and wear of the service brake
- High brake power, very good deceleration

Engine control

Feature

- 2 selectable engine control characteristics
  - Torque control (elastic rpm characteristics)
  - Work speed control (rigid rpm characteristics)

Advantage

- Rpm characteristics optimally tailored to the operating mode
  - Operation under normal conditions, road travel, transport
  - Implement use at constant engine speed
  - Operation on difficult terrain with speed setpoint, only minimum engine speed deviation

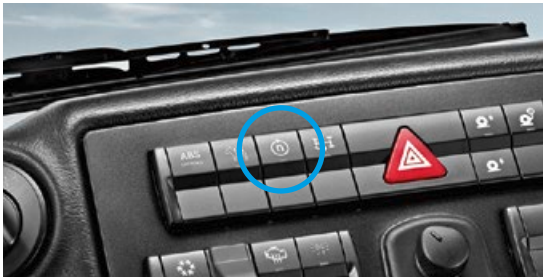

Switch to select engine control characteristic on dashboard (middle)

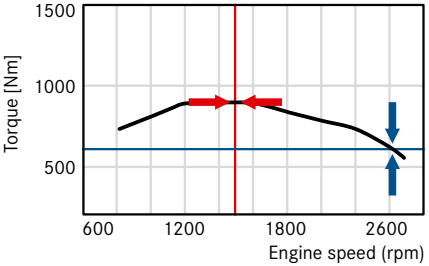

Torque and work speed control:

- Engine speed control for implement operation
- Torque control for driving mode

Engine speed/torque control

https://truckmanualshub.com/

Exhaust gas aftertreatment – BlueTec 6

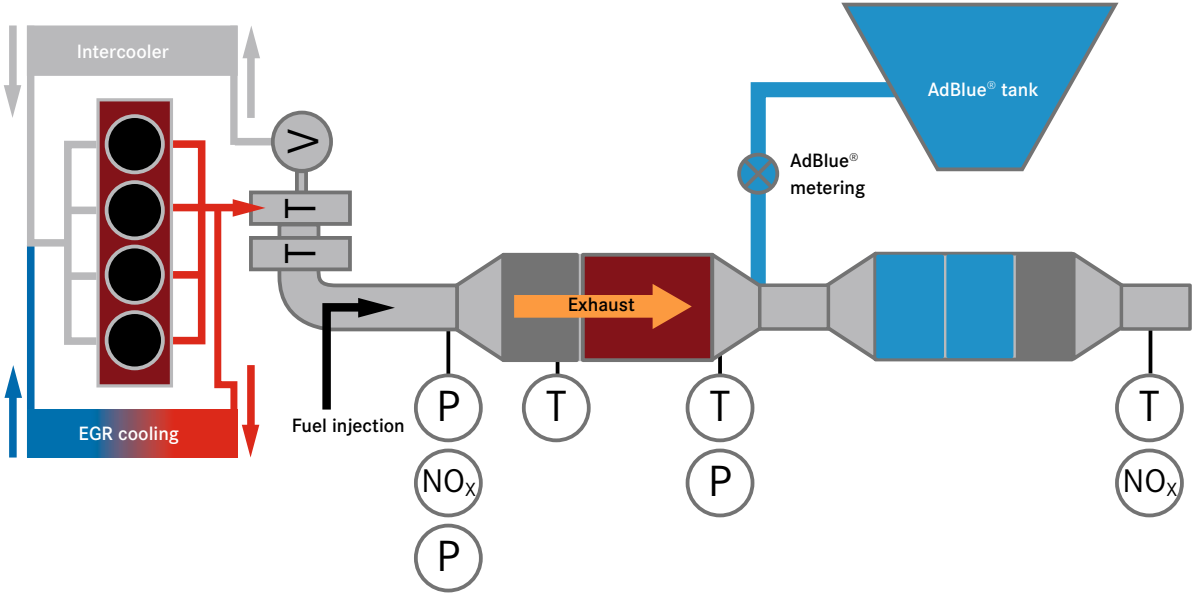

Exhaust gas recirculation (EGR)	+	Diesel particulate filter (DPF)	+	Selective Catalytic Reduction (SCR)

P Pressure sensor

NO_x NO_x sensor

T Temperature sensor

https://truckmanualshub.com/

Feature

- Newly developed Mercedes-Benz engines and exhaust box with BlueTec® diesel technology

- Exhaust gas recirculation
- Diesel particulate filter
- SCR catalytic converter

- Optimised AdBlue® injection
- Regeneration of diesel particulate filter during operation
- Downward-facing tailpipe as standard, upward tailpipe available as option [K7A]

Advantage

- Euro VI compliance
- Proven technology of the Mercedes-Benz volume series, optimised design to minimise space requirements
- Low NO_x emissions
- Particulate matter in exhaust flow reduced by 90 %
- Converts NO_x into harmless nitrogen and water vapour in conjunction with AdBlue®
- Reduced AdBlue® consumption
- Longer filter replacement intervals and long filter service life
- Equipment customisable to intended application of vehicle

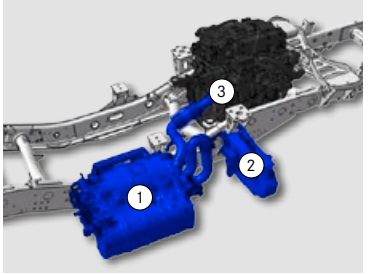

AdBlue® components

1. SCR catalytic converter
2. AdBlue® tank
3. AdBlue® metering unit

Reduced environmental impact with BlueTec 6, e.g. in conservation areas

https://truckmanualshub.com/

Exhaust emissions – limiting values

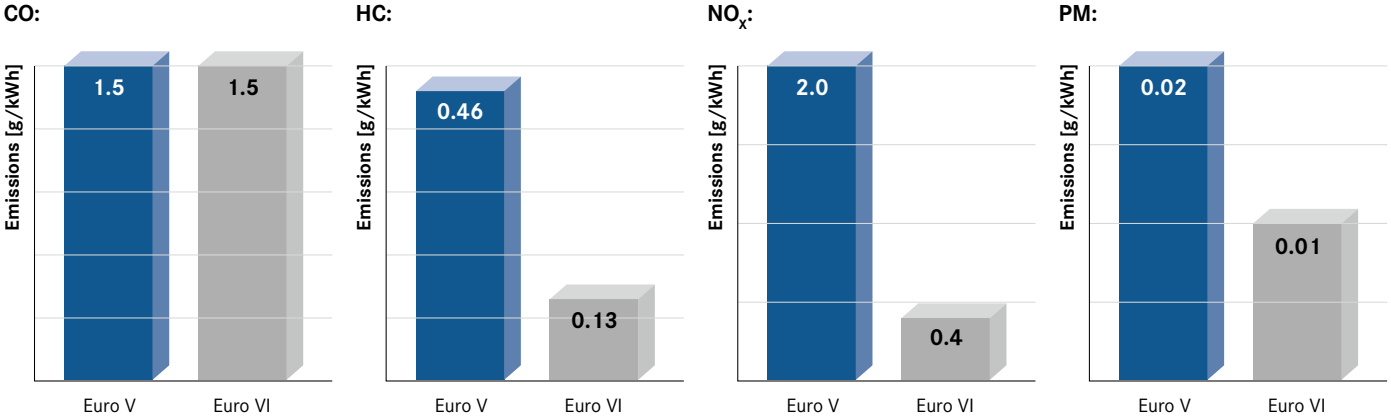

Standard	Vehicle category	Legal requirement since/from
Euro V	Trucks > 3.5 t	01.10.2009
Euro VI	Trucks > 3.5 t	01.01.2014

https://truckmanualshub.com/

Regeneration

Soot from diesel combustion continuously accumulates in the closed diesel particulate filter. To guarantee longer filter change intervals and a long filter service life, regular regeneration of the diesel particulate filter is necessary.

High exhaust temperatures effectively reduce the soot. As the exhaust gas temperatures are not always sufficient to produce continual soot reduction (passive regeneration), there is an automatic triggering of active regeneration, which is dependent on the operational profile of the vehicle. If necessary, the driver will be requested to initiate the regeneration manually when the vehicle is stationary. To do this the idling speed is increased to approx. 1400 rpm in order to achieve the optimum exhaust gas temperature.

The percentage of passive or active regeneration is dependent on the engine load and the vehicle's usage profile.

Passive regeneration

- Continuous, at exhaust gas temperatures > 250 °C
- No additional diesel injection into exhaust flow
- Takes place during driving without the driver noticing

Active regeneration

- Takes place subject to conditions of vehicle operation
- Triggered automatically with notification in instrument cluster, no action required from driver
- Additional diesel injection to increase the exhaust temperature
- Can be suppressed by means of theInhibit switch in dangerous situations or special operations
- Regeneration can be effected manually with vehicle at a standstill when notification appears in instrument cluster

DPF regeneration switch

1. Inhibit function (block/allow regeneration)
2. Initiate regeneration manually

Special operations/emergencies
The Inhibit function serves solely to suppress the regeneration process briefly in exceptional situations and must be reset manually after use. Permanent use of the Inhibit function will lead to premature filter loading which cannot be reduced. Unscheduled replacement of the filter will then be necessary.

Information field "Regeneration deactivated"

Information field "Regeneration overdue"

Information fields on the display show when the Inhibit switch is active and indicate when regeneration is overdue.

https://truckmanualshub.com/

Radiator system

Feature

- Separate charge air and water cooler (arranged next to one another)
- One fan for both coolers with electronic viscous coupling, mechanically driven via propeller shaft
- High ground clearance of approx. 1100 mm with 365/85 R20 tyres
- Installation location above frame protected by solid underride guard
- All radiators designed for dirt-intensive applications
- Easily removable cover on front of vehicle

Advantage

- Improved cooling capacity
- Reduced risk of soiling
- Easier cleaning
- Safety during fording
- Enhanced cooler efficiency ► fuel savings
- Protection from external factors (stones, branches, mud, etc.)
- Maximum functional reliability maintained even when driving through water
- Protection from mechanical influences
- Long cleaning intervals
- Excellent accessibility for cleaning

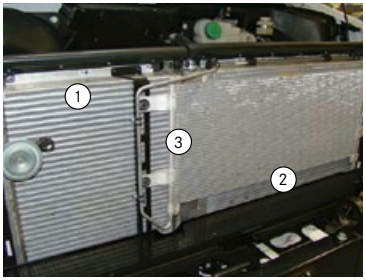

Separate cooler assemblies

1. Charge air cooler
2. Radiator
3. Air conditioning condenser

Coolers for charge air and engine cooling water arranged next to one another

Fan with electronic viscous clutch, mechanically driven via propeller shaft

https://truckmanualshub.com/

Optional equipment – engine

Feature	Advantage
[M55] Fuel preheating, with water separator	
• The container consists of a prefilter with heated water separator. It removes coarse impurities and water fractions from the fuel upstream of the standard filter.	• Even low-grade fuel is supplied to the engine free of particulate matter and water. Avoidance of damage to the injection pumps as a result of increased water content and dirt • High operational reliability despite poor fuel quality, unscheduled maintenance and service costs are avoided
• Auxiliary heating system to preheat the fuel	• Enhanced operational reliability at low temperatures, as the risk of gelling as a result of paraffin separation is reduced
• Water storage tank (0.5 l)	
[Z0A] Cold climate package	
	• Problem-free engine start at extremely low outside temperatures down as low as -26 °C
[K7A] Exhaust system, tailpipe vertical	
• Exhaust pipe extending up to cab roof on right-hand side of vehicle	• Exhaust gases are discharged upwards: – advantageous during stationary operations (e.g. crane operation) – no hot exhaust gases close to the ground
• Stainless steel heat guard	• Also prevents corrosion, resulting in longer value retention

https://truckmanualshub.com/

Transmission

Main transmission

Feature

- Fully synchronised manual gearbox with eight forward and six reverse gears
- Helically geared
- Integrated transfer case with torque ball connection
- Reverse gears are ⅓ slower than forward gears
- Synchronised reversing group (EQR) for direct changeover between forward and reverse gears
- Discrete design

- Low mounting
- Double cone synchronisation

- Optionally extendable by eight off-road gears [G22]

Advantage

- Appropriate forward and reverse speeds for on- and off-road use, simple and swift gear-changing
- Very smooth running, long service life, high efficiency
- Enables extreme axle articulation
- More effective gear spacing for manoeuvring
- Fast turning, rocking free

- Minimal transmission of engine vibrations
- Torsional flexibility
- Low vehicle centre of gravity
- Long service life
- Short shift times
- Ideal gear-step ratio for any application profile

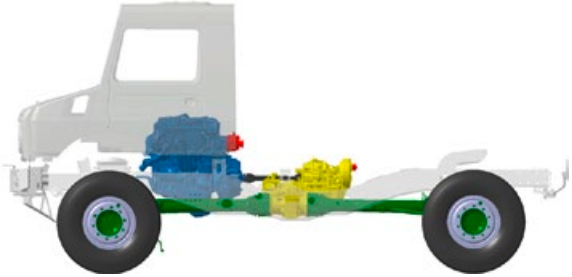

Modular design of engine and gearbox (side view)

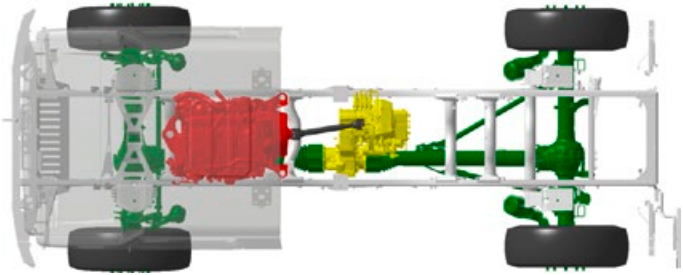

Modular design of engine and gearbox (from above)

https://truckmanualshub.com/

Overview

Fully synchronised Daimler 8-speed EPS manual transmission

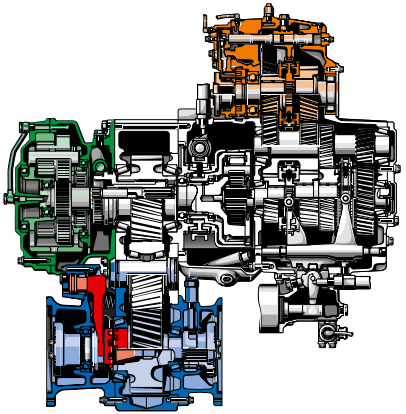

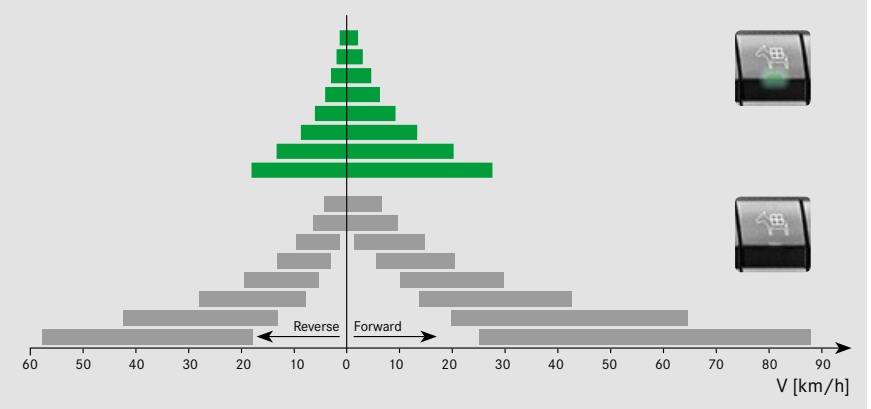

- Range group with off-road range [G22]
- Main gearbox
- Synchronised Electronic Quick Reverse gearshift (EQR gearshift)
- Transfer case
- Engagement of front-axle drive via dog clutch

- Off-road gears [G22]: approx. 2.1 km/h – 27.1 km/h
- Basic gears: approx. 6.6 km/h – 90 km/h

https://truckmanualshub.com/

Engine management

Feature

- Operation via multifunction lever
- Automatic determination of the correct subsequent gear, indication on display
- Depress clutch for gear change, changeover occurs automatically
- No mechanical/hydraulic connection between selector lever and gearbox
- Minimal physical effort required of driver, shifting work performed by pneumatic cylinder
- Neutral switch with detent position in multifunction lever

Advantage

- Convenient arrangement of shift elements and controls
- Optimal gear pre-selection
- Protection of engine, clutch and transmission
- During gear changes the right hand is free (e.g. for operating implements)
- No transmission of vibrations to cab
- Allows drivers to relax and concentrate on driving
- Direct shifting to neutral from any gear
- Automatic gear selection from neutral, at any speed

Gear selection indicator in instrument cluster

Multifunction lever

https://truckmanualshub.com/

Electronic Quick Reverse (EQR)

Feature

- Direct changeover between the forward and reverse gears in all working gears and up to 3rd gear of the road range
- Pre-selection of forward/reverse gears on multifunction lever, confirmation via clutch

Advantage

- Reliable and fast changeover, high adaptability through rapid changes between gears
- Changeover to reverse gears possible from all forward gears
- Highly reliable shifting
- Reduced driver workload, better handling, better response during turning, e.g. when rocking free in off-road terrain

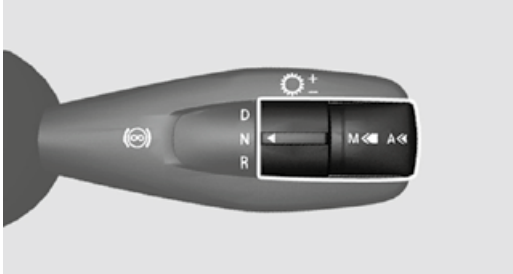

EQR gearshift on multifunction lever

EQR gearshift enables rocking free on off-road terrain

https://truckmanualshub.com/

Optional equipment – transmission

Feature	Advantage
[G48] Automatic Shift (EAS*)	
• Automatic gearshifts	• Relieves driver workload in all shift-intensive applications
• Automatic clutch operation	• Full concentration on traffic
	• 2-pedal system
• Automatic torque control during clutching	• Reduced clutch wear
• Manual gear-change selectable	• Driver selects optimal gear in implement operation or off-road
• Manual clutch operation with clutch pedal folded out	• Sensitive control in difficult driving situations
	• Drivetrain remains closed in extreme situations, even at idling speed
• Remote clutch control integrated [G5F]	• External control of the clutch possible, e.g. for switching in power take-off

* EAS: Electronic Automated Gearshift

A = Automatic gear change
Automatic shifting according to load condition, accelerator pedal position, engine mode, uphill/downhill gradient and engine brake.

M = Manual gear change
Manual gear selection on the multifunction lever. The driver determines the gear, clutch operation occurs automatically. Selected gear is maintained when driving uphill or downhill.

Folding clutch pedal

In difficult driving situations, such as are encountered in extreme off-road use and work operations, the clutch pedal can be folded out to enable sensitive control. When folded in, driving with automatic clutch operation considerably facilitates work.

https://truckmanualshub.com/

Feature	Advantage
[G22] Range group with off-road range • Additional range with eight forward and reverse gears downline of the main gearbox • Reduced gear-ratio step, approx. 2.2 to 27 km/h • Step-down ratio relative to road range i = 3.19	• For low operating speed • For increased tractive power with narrowly defined speed steps • Improved manoeuvrability in extreme off-road terrain
[G28] Preparation for working / off-road gear range • Technical modifications to the main gearbox to prepare for retrofitting of the off-road gear range [G22]	• Allows cost-effective retrofitting at a qualified workshop
[G50] Gearbox oil cooler • Mandatory: – operation in hot countries – use of mineral oils – for non-civilian use – in case of continuous power take-off > 50 kW	• Delivers the necessary cooling capacity even in extreme conditions
[G5F] Clutch, remote-controlled • Clutch remote control for power take-off in conjunction with [E87]	• Controlling and switching the power take-off on and off are also possible from outside the cab, e.g. for operating the pump on fire engines

https://truckmanualshub.com/

Axles

Portal axles

Feature

- Axles in portal configuration, connected via torque tubes to the gearbox, eccentric differential
- Axle tube and differential lie above the wheel centre
- Gear ratio step in hub reduction gear
- Uniform speed of front and rear axle in all-wheel-drive mode
- High front axle load in relation to gross weight
- Reinforced axles

Advantage

- Extreme ground clearance in conjunction with a low centre of gravity
- Enables safe driving over obstacles
- Vehicle can be driven through deep wheel tracks without becoming stuck
- Sleek drivetrain, smaller axle housing
- Increased traction in off-road terrain
- High payload, attachment of heavy front-mounted implements
- Maximum utilisation of the vehicle by means of duly configured implement combinations
- Higher axle loads

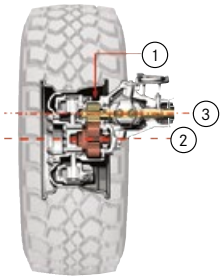

Portal axle with hub reduction gear

1. Hub reduction gear
2. Wheel centre
3. Axle centre

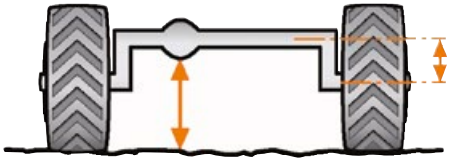

https://truckmanualshub.com/

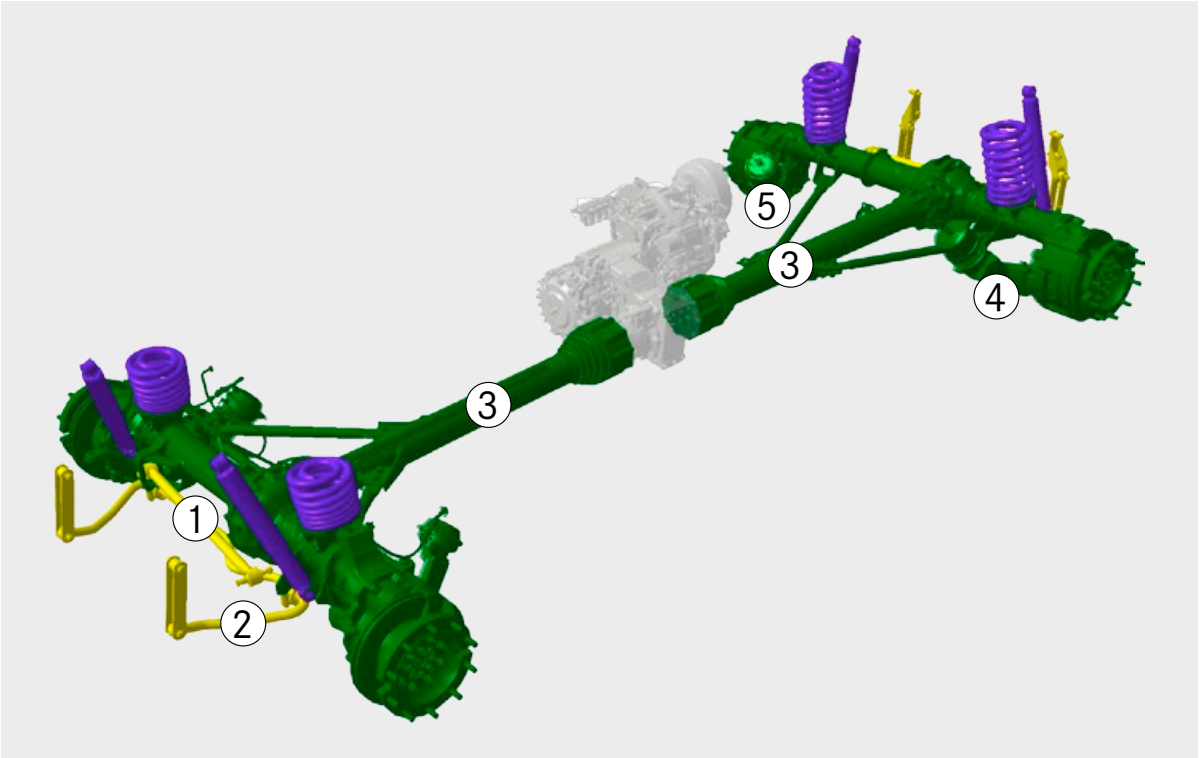

1. Cross strut
2. Stabiliser
3. Torque tube
4. Spring-loaded parking brake
5. Axle strut

Front and rear axle U 5023 in portal configuration with cross strut and stabilisers

https://truckmanualshub.com/

Axle suspension

Feature	Advantage
• Torque tube with cross strut	• Axle location in transverse and longitudinal direction • Offers high degrees of freedom
• Coil springs with progressive compliance characteristic and wide distance between spring centres	• Long spring travel and extensive axle articulation • Enable shorter frame overhangs (at front and rear) in comparison to leaf springs • Higher angle of approach/departure and short front end • Permanent ground contact possible for all four wheels, even on extremely uneven surfaces • High driving stability and ideal suspension set-up for every load condition
• Shock absorbers on all four wheels	• High driving stability, reduced roll tendency • Firm grip for all wheels in all speed ranges
• Stabilisers at front and rear	• No restriction of ground clearance • Improved cornering stability, reduced roll tendency • Improved driving safety with attachments which have a high centre of gravity
• New stabiliser mounting as molecular bearing	• Durable and robust

Coil springs with telescopic shock absorbers

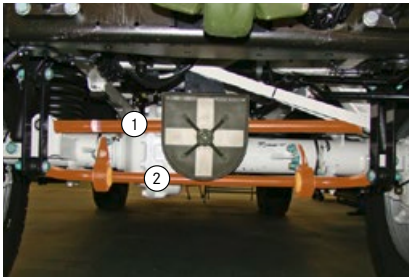

Rear view

1 Cross strut
2 Stabiliser

https://truckmanualshub.com/

Torque tube technology

Feature

- Torsionally flexible fixing/mounting of axles via torque balls on gear housing
- Propeller shaft is located in the torque tube
- The spring system does not affect propulsion in any way
- No trailing arm required

Advantage

- Enables very long spring travel
- Maximum possible diagonal torsional flexibility for the axles
- Protects the propeller shaft from soiling and damage
- No risk of entanglement from plants
- Improved traction in comparison to leaf springs, no S-shape deformation
- Tractive power boosted by weight transmission
- Wear- and maintenance-free axle suspension
- Lower kerb weight

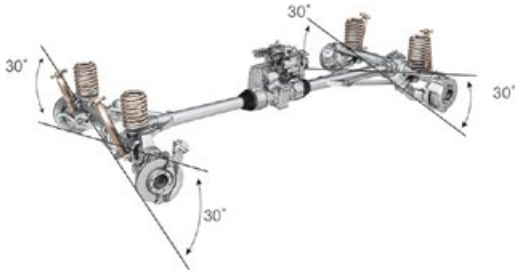

Extreme spring travel and extensive axle articulation (up to 30°) as a result of torque tube technology and coil springs

Torque tube protects propeller shaft from soiling and damage, even in extreme terrain

Diagonal torsional flexibility with torque tube technology

https://truckmanualshub.com/

Drive system

Feature

- Rear-axle drive
- All-wheel drive engageable while on the move via dog clutch
- Differential locks in both axles with 100 % locking effect via positive connection (dog clutch units)
- Differential locks engageable and disengageable while on the move
- Operated by rotary switch on the dashboard

Advantage

- For road use: agile, economical, reduced tyre wear, straightforward handling
- For off-road use: wear-free as a result of positive connection and slip-free transmission to front axle
- For extreme terrain: slip-free power transmission to all four wheels, synchronisation of the four wheels, full power transmission (also possible via one wheel in extreme cases)
- No interruption of pulling power during shifting
- No need to stop the vehicle
- Convenient engagement

Optimum power transmission to the axles on varying surfaces

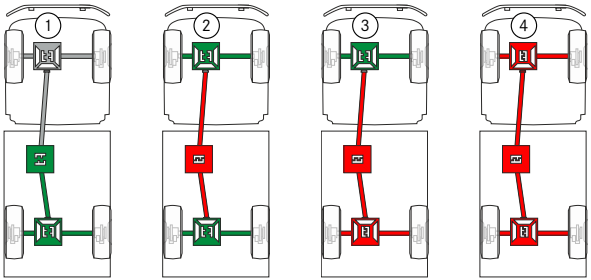

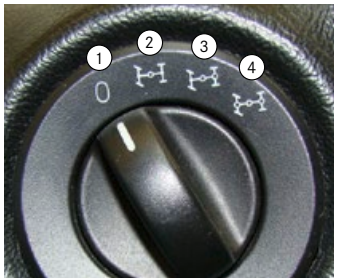

Drive variants and differential locks: (1) rear-wheel drive; (2) all-wheel drive; (3) all-wheel drive, rear-axle differential locked; (4) all-wheel drive, front- and rear-axle differential locked

https://truckmanualshub.com/

Single tyres

Feature

- Broad spectrum of tyre types, such as MPT and traction tyres with high-cleat tread
- Large-volume MPT low-pressure tyres (broad tyre pressure range from 1 to 6 bar)
- Four tyres of identical size and width
- Same track width front and rear

Advantage

- Specific equipment for different operating conditions: on- and off-road, soft ground, desert, etc.
- Low standing pressure
- High traction
- Reduced track in off-road use
- Good self-cleaning
- Advantageous for all-road use
- Low rolling resistance off-road
- High driving stability
- High traction as a result of genuine four-wheel drive
- Simple fitting of snow chains
- Rear wheels run in the track of the front wheels, avoiding the power-sapping need to form their own track (genuine four-wheel drive effect)
- Good track overlap
- High driving stability

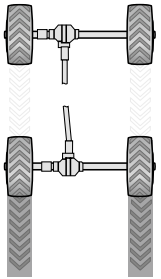
Single tyres

MPT treads

High-cleat tread

https://truckmanualshub.com/

Optional equipment – axles

[A30] Tyre pressure control system

Overview

The tyre pressure control system is an electro-pneumatic system installed in the vehicle for automatic tyre inflation and deflation at the front and rear axles while on the move.

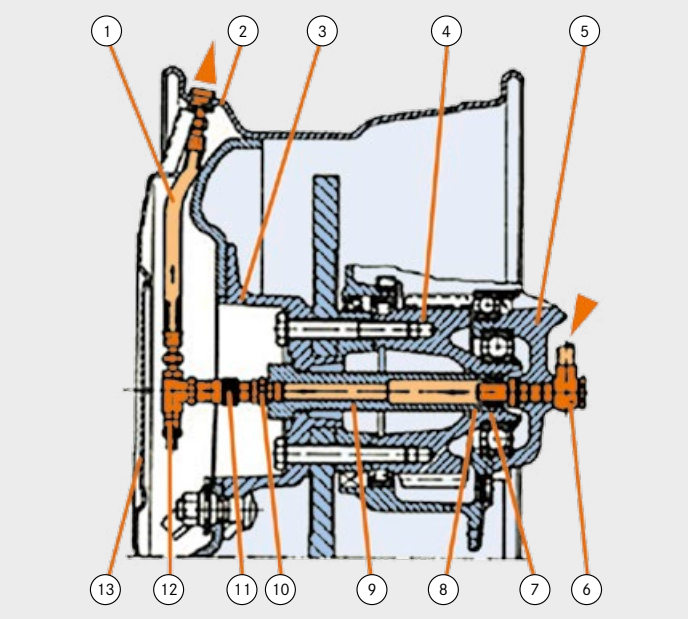

1. Hose line to the wheel rim
2. Wheel rim:
3. Wheel hub
4. Drive gear
5. Axle tube
6. Compressed air line
7. Shaft seals
8. O-ring
9. Sleeve
10. Fitting
11. Quick-release coupling
12. Test and filling valve
13. Wheel nut cover

https://truckmanualshub.com/

[A30] Tyre pressure control system

Feature

- Adaptation of the tyre pressure during driving
- Tyre pressure at front and rear axles individually adjustable on basis of pre-programmed pressure levels
- 4-channel system
- Operation via steering wheel buttons and intuitive menu navigation
- Indication of the tyre pressure on the display

Advantage

- Adjustment of tyre pressure from the cab while on the move
- Fast and flexible adaptation to road and ground conditions
- Equalisation of pressure loss, in case of tyre damage vehicle can be driven to the nearest workshop
- Adjustment of actual rolling circumferences of front and rear wheels
- Consideration of different axle loads
- User-friendly, safe control via pre-programmed tyre pressure levels
- Monitoring of the settings and detection of pressure loss
- Prevention of tyre damage

Pre-selection of tyre pressure on display, operation via steering wheel buttons

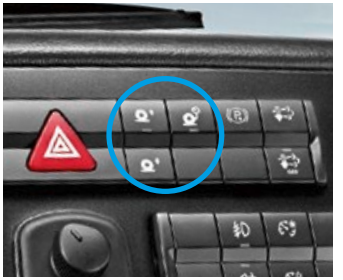
Push-button switch for tyre pressure control system

Left: attachable hose line, test and filling valve for rim and tyre
Right: driving condition, valve and line protected under the wheel hub

https://truckmanualshub.com/

[A30] Tyre pressure control system

Halving the tyre pressure off-road means doubling the ground contact area and the tractive force.

Traction conditions depending on the tyre pressure

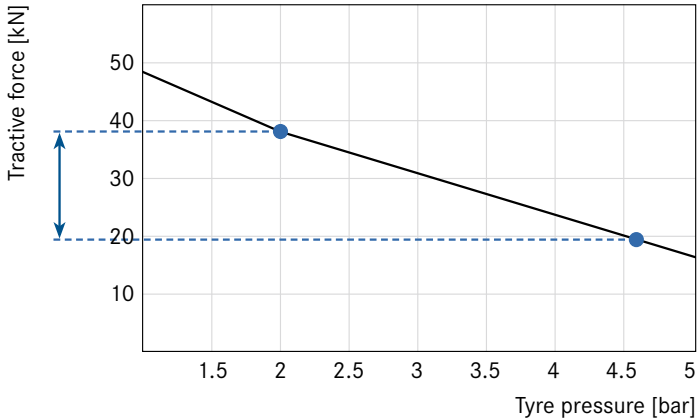

High tyre pressure on the road

- Small contact area
- Low tyre wear
- Low fuel consumption
- High load capacity at high speed
- Good track-holding and very stable steering

Low tyre pressure off-road

- Large contact area
- Low ground pressure, less field damage
- Less slip
- High traction
- Good self-cleaning (tread)
- Minimal ground compaction, fewer ruts
- No getting stuck

https://truckmanualshub.com/

Feature	Advantage
[A23] Guard plate for callipers • Guard plates on the callipers to repel stones, branches, wires, etc.	• Protect brake callipers from damage in off-road use
[A26] Reinforced wheel stud covers • Reinforced covers for the wheel studs (wheel hub cover)	• Protection from damage in extreme off-road territory
[A27] Double sealing of wheel hubs, for operations in muddy conditions • Additional sealing rings	• Prevents water and fine sand from entering into the hub reduction gear
[A28] Encapsulation of hub reduction gear, for operations in extremely muddy conditions • Complete encapsulation with additional sealing rings	• Prevents water and fine sand from entering into the hub reduction gear and the brakes • Special protection for operations in extremely muddy and sandy terrain (e.g. open-pit mining operations)
• Mechanical drainage valves in compressed air system • Only available as standard for U 4023, feasible for U 5023 via CTT code [UA28]	• Facilitates drainage of the compressed air system

https://truckmanualshub.com/

Brakes

Dual-circuit braking system

Feature

- Pneumatic disc brakes at all wheels

- Automatic load-dependent brake (ALB)
- Brake wear indicator
- High-pressure system (18 bar) via gear-driven heavy-duty compressor
- Air dryer

- Spring-loaded parking brake, acting on the rear wheels

Advantage

- Uniform braking effect
- No overheating even under continuous stress
- Maintenance- and repair-friendly
- Brake power regulation depending on the load condition
- Timely indication when maintenance is due
- High brake-air pressure
- Less space required for air tank, more space available on the vehicle
- No corrosion
- No freezing of the lines
- High braking force, minimal braking effort required of driver

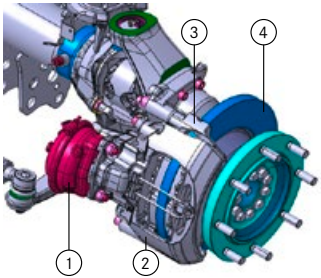

1. Diaphragm cylinder
2. Brake calliper
3. Brake carrier
4. Brake disc

Design of a sliding-calliper disc brake system

Disc brakes on all four wheels offer safety in off-road terrain, even with heavy bodies

https://truckmanualshub.com/

4-channel ABS

Feature

- In case of a locking tendency, the pressure of the wheel cylinder is corrected according to the road surface condition and load condition
- 4-channel ABS in all model designations
- ABS can be switched to off-road mode

Advantage

- Safe handling characteristics during braking
- Driving stability and steerability are preserved
- Reduced risk of accidents
- High level of safety through separate actuation of each wheel at the front and rear axles
- Volume production-tested
- Wheels can lock to a certain extent, in order to build up an earth wedge

Switch to change ABS mode (off-road)

Up to 15 km/h: locking
15 – 40 km/h: brief locking
Over 40 km/h: no locking

https://truckmanualshub.com/

Optional equipment – brakes

Feature	Advantage
[B2Z] Parking brake, also on front axle • Service and parking brakes are electro-pneumatically coupled as a securing brake. • The parking brake acts on the rear wheel, in addition the service brake acts with reduced pressure on the front wheels • Only when the engine is running	• High stability possible in cable winch operations without additional aids such as slope supports • The full weight pressure of the vehicle is available as a holding force, with due regard to the given coefficient of adhesion
[B5B] Trailer brake, 2-line • Pressurised fill line (red) • Unpressurised brake line (yellow) • Braking effect from air admission to the brake line	• EU safety standard • Accommodation of fast-running trailers
[B5N] Compressed air filling connection, front • External filling of the compressed air system from an outside source • Coupling head (red) on the bumper • Air supply for service brake, spring-loaded cylinder, gearshift, AdBlue® injection, suspension seat, etc.	• Allows the brakes and spring-loaded cylinder to be activated so that one's own vehicle can continue its journey • For towing the vehicle in the event of engine failure • Broken-down vehicles can be moved quickly • Continuous supply of compressed air from external source (hose connection), maintaining the vehicle on standby for immediate deployment (e.g. for fire-fighting operations)
[B68] Brake connection, front left • External operation of another vehicle's service brake system or control of the vehicle's own brake system from another vehicle • Coupling head (yellow) on the bumper	• For towing the vehicle in the event of engine failure • Control of towed vehicle's service brake system (actuation of brake from towing vehicle)

https://truckmanualshub.com/

Steering

Power steering

Feature

- Hydraulically assisted recirculating-ball steering
- Own power steering fluid supply
- Safety steering wheel with angled steering column
- Steering gear on inside of frame, fluid tank above fording depth

Advantage

- Easy steering even with high front axle loads
- Mechanical part of the steering system remains functional, should hydraulic power steering fail
- No mixing with hydraulic oil
  - Prevents soiling of steering hydraulics
  - Fully closed system
- Improved protection in case of collision or accident
- No restriction of approach angle
- Key components in protected area

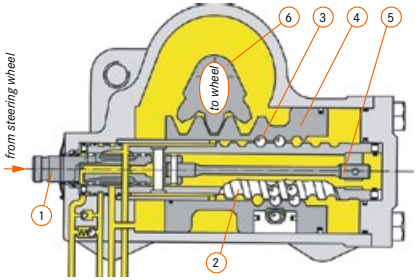

Diagram of the ZF Servocom 8095 steering system

1. Primary shaft
2. Steering worm
3. Recirculating ball
4. Operating piston
5. Torsion bar
6. Steering shaft

https://truckmanualshub.com/

Optional equipment – steering

Feature	Advantage
[Z01] Vehicle with left-hand drive • Left-hand control arm • Steering wheel adjustment	• Control of the vehicle on the left side • Individual adaptation to the driver
[Z03] Vehicle with right-hand drive • Right-hand control arm	• Steering of the vehicle on the right-hand side
[Z5Y] Vehicle for right-hand traffic • Headlamps for right-hand traffic • Tail lights and rear fog lamps for right-hand traffic • Mirror for right-hand traffic	• Deployment in countries with right-hand traffic, e.g. Germany
[Z5Z] Vehicle for left-hand traffic • Left-hand traffic headlamps with modified light pattern • Tail lights with modified positions of the rear fog lamps • Mirror holders for right and left side of vehicles as prerequisite for modified mirror position	• Deployment in countries with left-hand traffic, e.g. Great Britain

https://truckmanualshub.com/

Cab exterior

Cab concept

Feature

- Engine is located under cab (mid-engine concept)
- Seating positioned behind the front axle
- Minimal frame overhang
- Cab-behind-engine design with short front end
- 3-point cab mounting with rubber elements and shock absorbers
- 120 mm higher and longer than Euro III and Euro V models
- Closed cab roof, optional roof hatch [F21]

Advantage

- Additional distribution of engine weight to rear axle
- Well-balanced vehicle in off-road terrain
- Optimum weight balance due to even loading of front and rear axle
- Seat position in low-vibration area reduces subjection to jolting in off-road use
- Ergonomic entry
- Large approach and departure angles
- Good visibility to the front in off-road driving
- Reduced exposure to jolts from the road
- Compensation for torsional flexing of the vehicle
- Offers more stowage space behind driver's and co-driver's seats
- Great fore/aft seat adjustment range, improved legroom, greater headroom

Proven cab-behind-engine with greater volume than the predecessor model

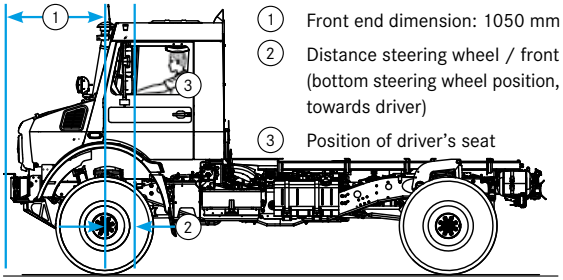

1. Front end dimension: 1050 mm
2. Distance steering wheel / front axle: 360 mm (bottom steering wheel position, max. inclination towards driver)
3. Position of driver's seat

Driver's seat position behind the front axle, short front end

https://truckmanualshub.com/

Doors

Feature

- Doors with large opening angle, entry behind front axle, steps and grab rails
- Exterior mirrors heated and electrically adjustable on both sides

Advantage

- Safe, comfortable and ergonomic entry and exit
- Convenient and safe adjustment from the driver's seat

Entrance, doors open to a wide angle

https://truckmanualshub.com/

Safety

Feature

- All cabs tested as per ECE-R-29/03 regulation on crash safety

Advantage

- High safety standard
- High chance of survival in accidents

ECE:	Regulations of the United Nations Economic Commission for Europe
ECE-R-29:	Protection of cab occupants

Survival spaces for occupants

ECE-R-29 is a voluntary, internationally recognised standard which confirms the stability of the survival space for all occupants in the cabs of commercial vehicles.

https://truckmanualshub.com/

Optional equipment – cab exterior

Feature	Advantage
[CE3] 3-step entrance	
• Full-size third step	• Comfortable, ergonomic cab access
• Elastomer mounting, manufactured to EN1846 fire brigade standard	• Resilient during off-road driving, complies with fire brigade standard
[EM5] Monitor for camera system	
• Monitor integrated in the roof lining	• In easy view
• Monitor with four inputs	• Connecting several cameras possible (e.g. front and reversing camera)
[EF2] Front camera	
• Mounted on front of vehicle, under bumper	• Full view of the front area, enhanced safety • Protected location, also for off-road driving
[EF3] Rear-view camera	
• Mounted on vehicle rear with the aid of a magnetic foot	• Full view of the rear area, flexible use

Front camera under bumper

Monitor for camera system

3-step entrance

https://truckmanualshub.com/

Feature	Advantage
[F21] Roof hatch, round, swivelling • Diameter 75 cm, set clockwise in direction of travel	• Access to roof attachments from inside the cab • High flexibility for firefighting and defence operations, e.g. firefighting from the cab (pump & roll) • Driving with open roof hatch possible
[F3W] Cab tilting mechanism, mechanical / hydraulic • Dual action hand pump with lift cylinder • Automatic, hydraulic-mechanical lock • Operated behind the front bumper lever on the right-hand side, by means of lever and socket wrench • Safety boom • Only in combination with tilting brackets for cab [F64]	• Facilitates access to engine compartment for repair operations also outside workshops • Safe tilting of the cab

Cab tilting mechanism [F3W] on front right of vehicle

Unimog in forest fire-fighting operation with cab roof hatch, swivelling [F21]

Double cab configurable via CTT process – available on inquiry [UF07].

https://truckmanualshub.com/

Feature	Advantage
[F6B] Windscreen, non-tinted, heated • Heat-insulating windscreen with electric heating for defrosting • Operation with rocker switch	• Quick de-icing of the windscreen • No icing-up of the windscreen while driving • Windscreen is kept free of fogging • Windscreen wiper does not ice up
[L47] Additional headlamps for front attachments • Repetition of the main headlights, higher position	• Compliance with legal provisions for front-mounted implements • Full illumination, resulting in safer operation of front implements
[L50] Rotating beacon, yellow, left, with support • Removable rotating beacon on support • Support can be extended by approx. 40 cm	• High level of passive safety through early identification of vehicle • Good visibility even with high bodies
[L51] Rotating beacons, yellow, left + right, with supports • Removable rotating beacons on supports • Supports can both be extended by approx. 40 cm	• High level of passive safety through early identification of vehicle • Good visibility even with high bodies

https://truckmanualshub.com/

Cab interior

Spaciousness

Feature	Advantage
• Spacious interior, including stowage space and compartments and bottle holders	• Great freedom of movement • Ample stowage space and compartments for personal items, clothing and equipment • Orderly and convenient stowage
• High cab roof	• Large freedom of movement and headroom
• Stowage tray, low, on engine tunnel, with cup holder	• Frequently required items (shipping documents, mobile phone, food, etc.) can be kept within the driver's reach
• 2-seat or 3-seat version available	• Variable seat arrangement, depending on type of application

Spacious interior

Multifunction steering wheel

https://truckmanualshub.com/

Controls

Feature	Advantage
• Control panel in dashboard (centre) with switches arranged in blocks	• Easy operation through logical switch arrangement • Clear and ergonomic arrangement within the driver's reach • Clearly recognisable in the dark • New position for parking brake • High-quality look
• Back-lit controls with adjustable brightness (when low beam is on)	• Safe and convenient operation in the dark
• 24V power socket	• Simple connection of various small appliances in the cab

Controls in the cockpit

Inserts in cab roof

https://truckmanualshub.com/

Steering and gear-changing

Feature	Advantage
• Multifunction steering wheel, adjustable for height and tilt	• Many functions can be conveniently controlled on the steering wheel • Ergonomic seated position, non-tiring driving • Individual adaptation of the workplace
• Multifunction lever	• Integrated functions such as gearshift, premium engine brake, Electronic Automatic Shift (EAS), quick reverse gearshift (EQR)

Multifunction lever and multifunction keys on the steering wheel

Adjustment range of the steering column

https://truckmanualshub.com/

Instrumentation

Feature	Advantage
• Instrument cluster with graphics-capable 10.4 cm TFT display • Ergonomic arrangement within the driver's field of vision	• Swift, comprehensive information on the vehicle's operating conditions and status • Clear, unambiguous presentation of important information
• Bright, monochrome display for good, glare-free legibility	• Avoidance of misinterpretations
• Driver information system – call-up of relevant information such as oil level, tyre pressure, coolant level, etc.	• Simplified departure check for the driver via standard start check without visualisation

Instrument cluster

https://truckmanualshub.com/

Standard controls

Instrument cluster
Displays information on:
- Overall vehicle
- Engine status

Multifunction steering wheel
Adjustable for height and tilt
Operation of:
- Radio
- Telephone
- Instrument cluster
- CRUISE CONTROL
- driver information system
- electronic manual throttle

Multifunction lever
Operation of:
- gear selection (forward/ reverse)
- Gear selection (up/down)
- mode selection (automatic / manual)
- Engine brake

Control panel in dashboard
Operation of:
- all-wheel drive and differential locks
- heating and ventilation system
- Activation and deactivation of additional optional functions (e.g. operation of tyre pressure control system)

https://truckmanualshub.com/

Air conditioning, heating and ventilation system

Feature

- Combined heating and ventilation system
- Four-speed blower
- Hot water heater with residual heat utilisation
- Pollen filter with coarse dirt grill

Advantage

- Individual control of the interior climate
- Fast de-icing of windows
- Fuel savings and environmental protection
- Suitable for dust- and dirt-intensive applications
- Clean and pure air in the passenger compartment, health protection for driver and co-driver
- Readily accessible, simple cleaning

- Control unit on control panel (centre)

- Within driver's reach

Control unit for air conditioning, heating and ventilation system

Air flow directions (orange = air intake in recirculation mode)

https://truckmanualshub.com/

Optional equipment – cab interior

Feature	Advantage
[DF1] Suspension seat, air-sprung, driver	
• Fitted backrest and integrated head restraint	• Good adaptation to the contour of the back
• Integrated 3-point automatic seat belt	• Easily and quickly adjustable to individual heights and weights
• Air-sprung suspension system, adjustable dampers	
• Weight adjustment from 50 to 150 kg, cycle stroke +/–40 mm, bellows	• Good damping even on rough roads
• 230 mm fore/aft adjustment, in increments of 10 mm	• Improved seat climate resulting from fluted upholstery
• 100 mm height adjustment, pneumatic assist	• Fatigue-free driving
• Inclination adjustment 16°, (from –5° to +11°), finely incremented	
• Backrest adjustment in 2° steps (from –12° to +40°)	• Good access to stowage space
• Backrest folds down onto seat cushion	• Facilitates getting in and out
[DF3] Suspension seat, air sprung, with seat heating, driver, corresponding to [DF1], plus:	
• 24V seat heater	• Pleasant warmth in cold weather
• 2-chamber lumbar support, armrest tilt-adjustable	• Preservation of healthy spinal column, back and kidney area
[DB1] Suspension seat, air-sprung, co-driver	
• Corresponding to [DF1]	
[DB3] Suspension seat, air-sprung, with seat heating, co-driver	
• Corresponding to [DF3]	
[D3Z] Seat cover, imitation leather	
• Highly durable, grime-resistant, washable imitation leather	• Long-lasting quality and upmarket feel
• For driver's and co-driver's seat, not for middle seat [D17]	• Easier to clean seats quickly, very good resilience to wear and tear from getting in and out

https://truckmanualshub.com/

Feature	Advantage
[D1Z] Centre seat, with seat belt • Individual seat with head restraint and 3-point automatic seat belt, in addition to co-driver's seat • Rigid seat without adjustment options for backrest and seat cushion	• Comfortable sitting, even on longer journeys • Space for two accompanying persons (e.g. for transport to and from the place of work) • High safety standard for both passengers
[DV3] High stowage box with folding table • Addition to the stowage facilities in the cab	• Swift access to important and frequently required items (documents, tools, mobile phone, food, etc.) within the driver's reach
[D6F] Air conditioning system • Heating and ventilation system is complemented by an effective integrated air conditioning system for the single cab • Air conditioning condenser (cooling output 4 kW) integrated in engine compartment, bonnet with two air ducts on left-hand side • Large air outlets on dashboard • Temperature and blower adjustment in combination with heating and ventilation system in the middle of the dashboard • 3-position rotary switch with pictogram • Air distribution into the footwell and to the windscreen • Swivelling nozzles	• Enhanced comfort and well-being thanks to reduced relative humidity and pleasant temperature • Driver fitness is maintained by reduction in the inside temperature on hot days • The air is dried during operation in heating mode and this prevents the windows from misting up

https://truckmanualshub.com/

Feature	Advantage
[D6N] Auxiliary heater with engine preheating over diesel tank • Auxiliary heater for heating the engine coolant and the cab, from WEBASTO • The time for starting heating can be pre-set at up to 7 days • Three switch-on times can be programmed • Pre-selection of the temperature • Operating cycle 10 to 120 min • Remaining time 1 to 120 min • Can be switched on while driving • The heat output is 1.8 to 7.6 kW • Fuel consumption between 0.2 and 0.9 l/h • Automatic altitude compensation	• Preheated cab and clear view at departure • Preheated engine, problem-free and gentle start-up of the engine, even at extremely low outside temperatures • Increased heat output in the cab • Warm engine directly from engine start, fuel savings • Easy engine start, reduced battery wear
[DE4] Power windows, on both sides, with door trim • Power windows on both doors • Door trim	• Convenient opening and closing of the windows on both sides • Enhanced appearance and feeling of comfort

https://truckmanualshub.com/

Feature	Advantage
[J2A] CD radio	
• DIN installation	• Highly user-friendly
• CD drive (MP3)	• High functionality, reception and sound quality
• Mini-USB jack	• No malfunctions due to incorrect wiring
• 2 x 20 W power output	• Antenna and speakers included in the scope of delivery
• 6 station buttons	
• 6 x 6 station presets	
• AUX jack	
• FM-RDS tuner (VHF), AM tuner (MW/LW/SW)	
• RDS-EON	
• External muting	
• Diverse control options (e.g. multifunction steering wheel)	• Fine finish, ergonomic and tailored to interior appointments
• Large, clearly defined buttons	
• Factory installed	• Time-saving and cost-reducing installation at the factory
[J2B] CD radio with Bluetooth® corresponding to [J2A], plus:	
• Bluetooth® hands-free unit	• Mobile phone can be used while on the move via Bluetooth® (recognised hands-free system)
• Integrated microphone on the front (MIC)	• Radio loudspeakers ensure excellent intelligibility (volume control)
[J1C] Instrument cluster 12.7 cm, with video function	
• 12.7 centimetre colour display	• Good, glare-free legibility with additional information avoids misinterpretations
• Video input	• An additional camera can be fitted for enhanced work safety and optimised comfort

https://truckmanualshub.com/

Auxiliary drives

Location

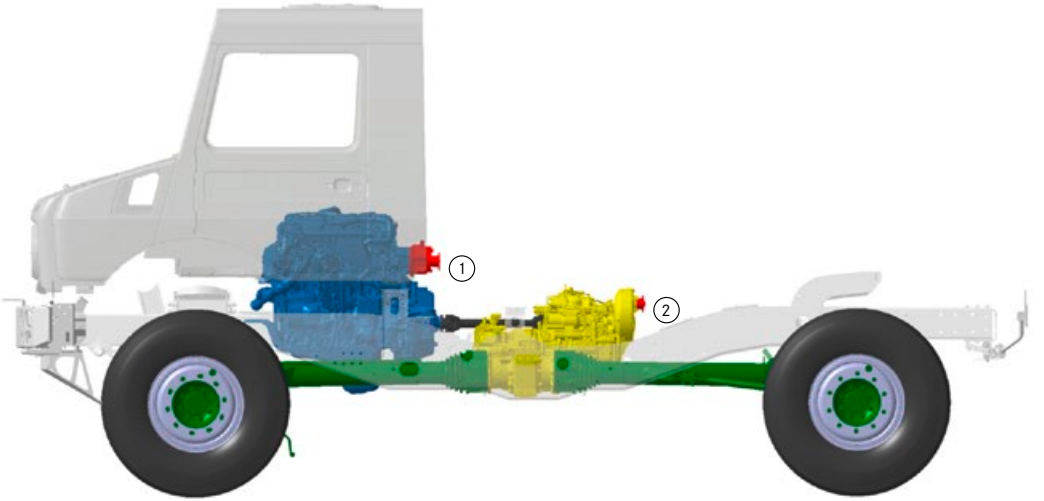

1 [N05] Engine PTO to rear (with 6-hole flange)

2 [N13] Gearbox PTO, high-speed, with 6-hole flange
[N16] Gearbox PTO, high-speed, with 4-hole connection
[N19] Gearbox PTO, very high-speed, with 6-hole flange

https://truckmanualshub.com/

Optional equipment – power take-offs

Feature	Advantage
[N05] Engine PTO to rear, with 6-hole flange	
• Alternative to direct drive of body assemblies with high power requirement	• High output and torque, up to 600 Nm
• Gear ratio i = 0.933	
• Independent of the manual transmission	• No power interruption across the full speed range
• Electro-pneumatically actuated dog clutch unit	• Convenient, defined switching on and off
• Operation via push button in control panel in centre of dashboard, with indicator lamp	
• Activation when engine is off, deactivation possible at any time	• Can be used independently of the engaged gear or the drive clutch

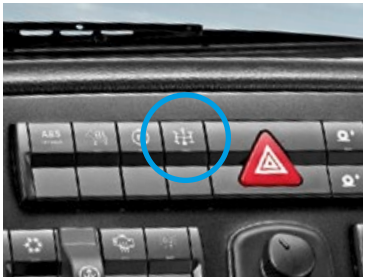
Engine PTO switch

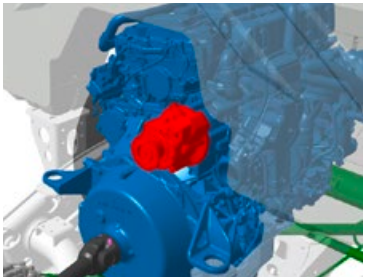
Engine PTO (highlighted in red)

The engine power take-off can be switched on only with the engine OFF, to prevent incorrect operation.

https://truckmanualshub.com/

Feature	Advantage
[N16] Gearbox PTO, high-speed, with 4-hole connection	
• Standardised flange on manual gearbox (DIN 5480, 4-hole flange, number of teeth: 14)	• Use of commercially available hydraulic pumps
• Gear ratio i =1	• Output speed and rotational direction identical to engine rpm and rotational direction
• Rotational direction anticlockwise as seen in direction of travel	
• Electro-pneumatically actuated dog clutch unit	• Convenient, defined switching on and off
• Operation via push button in control panel in centre of dashboard, with indicator lamp	
• Only activated when drive clutch is operated and vehicle is stationary	• Protected against incorrect operation
• Remote control of the clutch with Automatic Shift [G48], signal picked up via implement socket [E87]	• For implement operation from outside the vehicle
• Programming of the maximum rotational speed	• No exceeding of the permissible maximum speed
[N13] Gearbox PTO, high-speed, with 6-hole flange	
• Corresponding to [N16] with 6-hole flange	

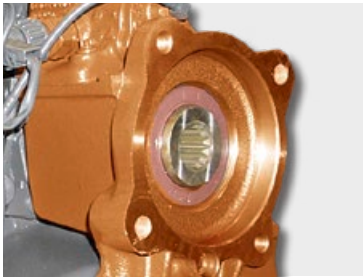

[N16] Gearbox PTO, high-speed, with 4-hole connection

[N13] Gearbox PTO, high-speed, with 6-hole flange

https://truckmanualshub.com/

Feature	Advantage
[N19] Gearbox PTO, very high-speed, with flange	
• Standardised flange at the manual transmission in accordance with ISO 7646	• Use of commercially available drive assemblies, e.g. fire brigade pumps
• Gear ratio i =0.61	
• Rotational direction clockwise in direction of travel	
• Electro-pneumatically actuated dog clutch unit	• Convenient, defined switching on and off
• Operation via push button in control panel in centre of dash-board, with indicator lamp	
• Only activated when drive clutch is operated and vehicle is stationary	• Protected against incorrect operation
• Remote control of the clutch with Automatic Shift [G48], signal picked up via implement socket [E87]	• For implement operation from outside the vehicle
• Programming of the maximum rotational speed	• No exceeding of the permissible maximum speed
[N18] Preparation for gearbox PTO	
• Preparation for retrofitting of [N13]/[N16]/[N19]	• Allows retrofitting at a qualified workshop

[N19] Transmission PTO, very high-speed, with flange

Transmission PTO switch

https://truckmanualshub.com/

Hydraulics

Overview of hydraulic system

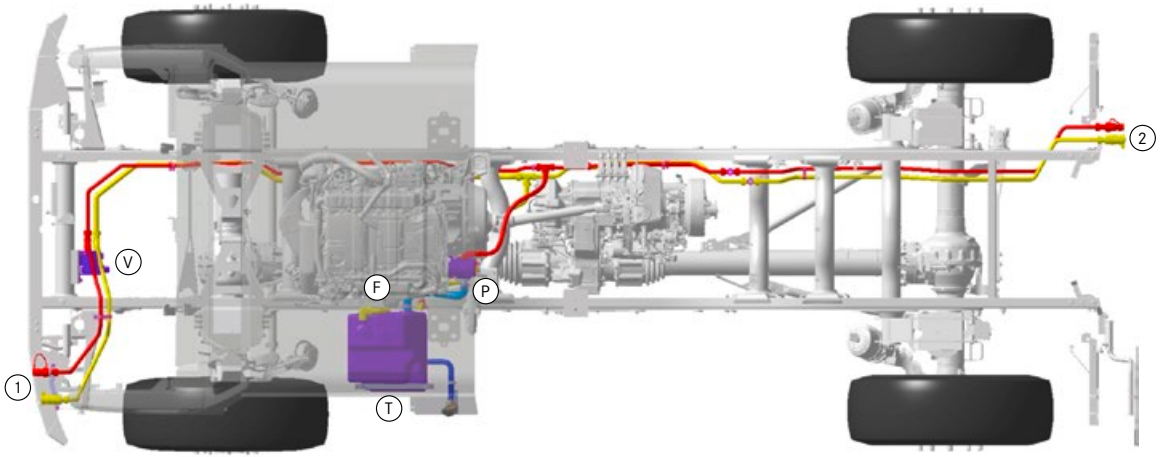

(1) Hydraulic connections at front (red = delivery line, yellow = return line)

(2) Hydraulic connections at rear (red = delivery line, yellow = return line)

(P) Hydraulic pump

(T) Tank

(F) Filter

(V) Control unit / valve

https://truckmanualshub.com/

Optional equipment – hydraulic system

Feature	Advantage
[H10] Hydraulic system, with single spool valve	
• Single hydraulic system for universal operation with 240 bar system pressure and 57 litre oil delivery rate at 2200 rpm	• Deployment for both continuous consumers and positioning movements via valves on the equipment • Pressure level for common attachments such as cable winch, snow plough, front loader, hydraulic tools, emergency power generator, compressor, etc.
• Internal-gear fixed displacement pump on engine PTO for continuous consumers and positioning movements	• Effective driving of oil engines in conjunction with oil cooler on equipment • Open hydraulic system: ideal for controlling single or dual action cylinders in conjunction with valves on the equipment • Fixture for installation of an implement control desk
• Delivery and return line at front (delivery line as plug; return line as socket, flat sealing connections)	• Direct drive of a front-mounted oil engine possible • Standardised, leak-free connections with no risk of confusion (no oil leakage during connection or disconnection)
• Oil temperature warning lamp	• Protection of the hydraulic system
• Cable boot at cab front and rear wall	• Simple connection for implements

https://truckmanualshub.com/

Feature

[H50] Hydr. plug connection, rear oil supply, 2 connections

- Delivery and return line at rear (connections as at front)

Advantage

- Direct drive of an oil engine (spreader) possible
- Connection option for tipping cylinder via additional control valves
- Snow plough / spreader combination possible via corresponding valve combinations (flow dividing valve)

Hydraulic system [H10]: Plug connections at front on the left in direction of travel: delivery line (red) and return line (black)

Plug connections at rear [H50] on the right in direction of travel: delivery line (red) and return line (black)

https://truckmanualshub.com/

Electrical system

Electronic networking

Feature	Advantage
• Electronically instead of mechanically controlled systems	• Faster and more precise • Functions no longer realisable by mechanical means, e.g. economical engine through use of electronics
• CAN bus: networking of electronic systems in the vehicle	• Very fast, bidirectional data exchange between different control devices in the vehicle
• OBD diagnostic socket	• Input and output of relevant diagnostic data (Star Diagnosis)
• The assistance and safety systems communicate in the vehicle via CAN bus	• The driver's workload is reduced in critical driving situations • The vehicle is better safeguarded from driving faults • Driving state signals are immediately displayed
• Central plug connection between cab and frame	• Simple disconnection of the electrical equipment from the cab, e.g. for diagnosis or repairs

Central plug connections in the engine compartment

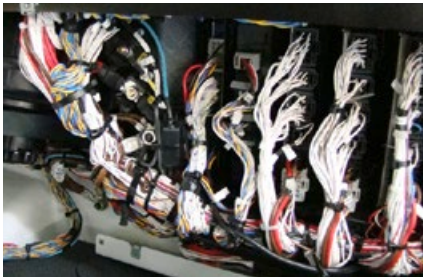
Central plug connections in the cab

All driving states are electronically compiled, analysed and relayed accordingly to the engine control system. This enables the most economical gear to be identified and engaged, for example.

Ex factory, the Unimog model series fulfil regulation 72/245/EEC 'Electromagnetic Compatibility' in the version 2009/19/EC.

https://truckmanualshub.com/

Optional equipment – electrical system

Feature

[E87] Equipment socket, 32-pin

- Electrical interfaces between vehicle and implement
- Power supply for implements up to max. 40 A
- Speed and position signals C3/C4
- Activation/deactivation of PTOs in conjunction with [G48]
- Interface for connecting an external (at implement end) engine remote control for start/stop, engine speed change
- Actuation of gearbox for crane body or refuse disposal vehicles (e.g. speed limiter, immobilizer)
- Eight free lines routed into the cab for optional use by the bodybuilder
- Signals for activated rotating beacon and back-up lamp
- Actuation of three free indicator lamps

Advantage

- Installation of lines via cable set with defined and unique assignments
- Highly reliable operations between vehicle and implement and safe and reliable operation of the overall system

[E87] Implement socket, 32-pin

The relevant connector for the [E87] equipment socket is available via Mercedes-Benz Parts
A 043 545 15 28 – connector housing, HB-K. 16. STS-GR.1.21
A 000 545 21 63 – crimp contact, HE/HA-C-Sti.Ag. 2.5 mm²
A 000 545 22 63 – crimp contact, HE/HA-C-Sti.Ag. 1.5 mm²
A 051 545 60 28 – plug insert, HEE 32 Sti.C

https://truckmanualshub.com/

Feature	Advantage
[E16] Parameterisable special module (PSM), 5 V CAN • Electronic module for direct exchange of information between the vehicle electronics and the fitted equipment, attachments, bodies and the trailer • Communications interfaces between vehicle electronics and retrofitted systems are clearly defined and standardised	• Enables setting of typical functions, such as: – reduction of top speed – blocking of reverse gears – switching PTO on and off – increasing/reducing engine speed – resumption of previous engine speed • High functional reliability of all components since subsequent connection of external systems occurs with no intervention in the vehicle electrical system or electronics. • Extended functions for trailer/implements via second interface • More efficient working and enhanced user-friendliness for the driver • Selling point for resale
[EG5] Alternator, 28 V/150 A, protected from soiling, with fording capability • Boosted output (1400 W increase) • Dirt-resistant • Fording capability	• Offers power reserves for additional loads • Longer lifespan and uninterrupted power supply ensured in open-pit mining or comparable operations • No damage from exposure to water, high operational reliability even under water
[E1M] Alternator, 28 V/150 A • Boosted output (1400 W increase)	• Offers power reserves for additional loads
[E1B] Batteries, 2 x 12 V / 170 Ah, low-maintenance • 2 12 V batteries • 170 Ah capacity each	• Good operating reliability after long breaks from driving and when running high-performance consumers • Reduced maintenance effort thanks to low-maintenance design

https://truckmanualshub.com/

Feature	Advantage
[E37] Continuous current socket, 12 V/15 A	
• For 12 V consumers	• For consumers such as 12V spreader, agricultural implements
• 3-pin	
• Via voltage converter 24 V/12 V (on-board electrical system 24 V) in the E box	• Power outlet located in immediate vicinity of the cable boot at the cab rear panel
• Tap up to 15 A	
• C3 vehicle speed signal and ground	
• In the cab behind the driver's seat	• Easily accessible, no hindrance of the driver/co-driver by surrounding cables
• Complies with EN 15431	
[E45] Front plug-in socket, 24 V, 7-pin	
• 7-pin	
• 24V	• Power supply for the lighting equipment of front-mounted implements
• Supplies power to turn signal, position and licence plate lamps at the front implement mounting area	• Easily accessible connection
[ED6] On-board socket, 24 V/25 A, in cab, with C3 signal	
• Electrical power for implements with C3 signal for speed-dependent control	• For consumers such as 24V spreader
• 3-pin	• Easily accessible, no hindrance of the driver/co-driver by surrounding cables
• Behind the driver's seat	• Location in cab avoids corrosion from exposure to road salt and external influences
• Complies with EN 15431	• C3 vehicle speed signal

https://truckmanualshub.com/

Feature	Advantage
[E33] Battery cutoff switch on battery box • Manually operated main switch to cut the battery current • Switch positioned on the side of the battery box • The switch head (red) is removable: protection from unintentional switching on or off • The power supply to the tachograph is maintained	• Deliberate disconnection of all power consumers from the battery • Protection from battery drainage, leakage current, etc.
[E79] Battery cutoff switch, electronic • Two electronic EMERGENCY OFF switches to cut the battery current • Integrated undervoltage protection • The power supply to the tachograph is maintained	• Deliberate disconnection of all power consumers from the battery • Protection from battery drainage, leakage current, etc.
[E86] Automatic battery cutoff switch for fire brigade vehicles • Automatic cutting of battery current after removing the ignition key and pressing the cutoff switch • The power supply to the tachograph is maintained • Two EMERGENCY OFF switches in cab and outside on battery box	• Deliberate disconnection of all power consumers from the battery • Protection from battery drainage, leakage current, etc. • Immediate manual cutting possible

https://truckmanualshub.com/

Feature	Advantage
[EK7] Special parts for hazardous goods • Equipment for the transport of hazardous goods by road (ADR) • Model categories available on request • Battery cutoff switch for controlled cutoff after approx. 5 min, excluding the tachograph • EMERGENCY OFF switches inside and outside of the cab • Corrugated hose sheathing for the cabling	• No cost-intensive and time-consuming retrofits • Approved in accordance with ECE-R 105 • Customer free to choose ADR classification • Fast and safe disconnection of power supply in case of danger for driver or fire brigade
[C7K] Battery support, batteries above each other • Battery carrier for two 12 V batteries, positioned one above the other • Mounting on the left of the frame (viewed in the direction of travel) • Suitable for 2 x 12 V / 170 Ah batteries, low-maintenance [E1B] • Only in combination with manual battery isolater switch at battery box [E33]	• More space for additional attachments on the frame, e.g. for cranes with side supports

[C7K] Battery support, batteries above each other

https://truckmanualshub.com/

Attachment and mounting areas

Locations of attachment and mounting areas

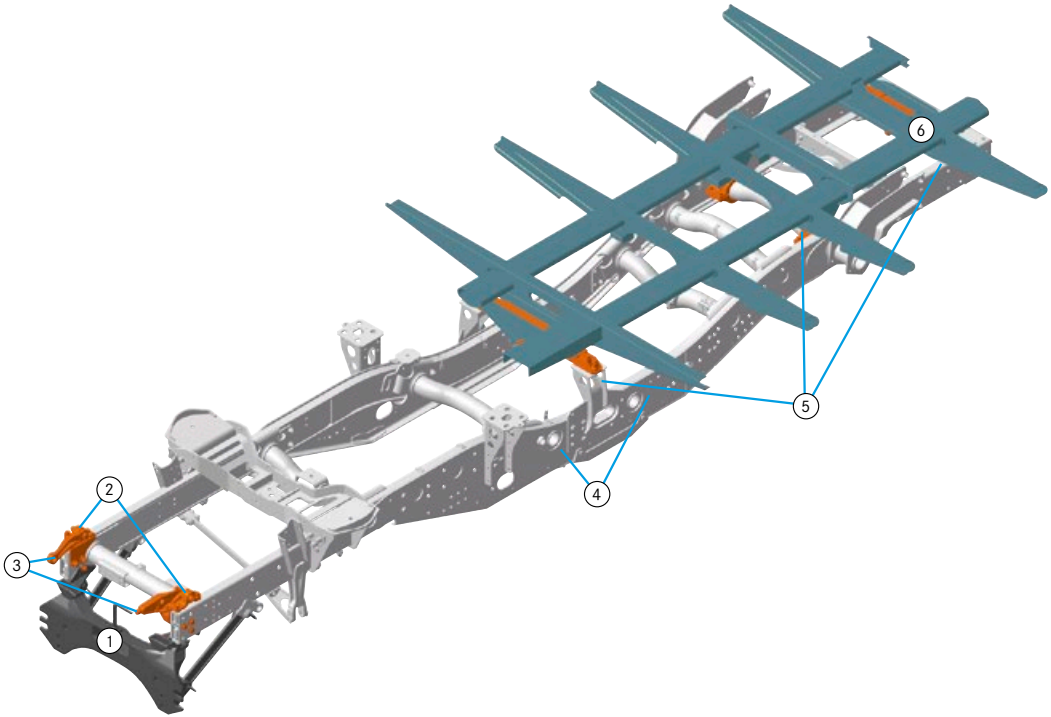

Attachment and mounting via:

1. Standardised front mounting plate, size 3 [CP3], e.g. for earth mover, snow plough, front-mounted sweeper
2. Front mounting brackets [CA2], e.g. compressor, emergency power generator
3. Cable winch bracket [CA2]+[CH5], e.g. front cable winch
4. Frame mounting brackets, e.g. frame trussing of slope support
5. Attachment fixtures for non-MB bodies [CD5], e.g. box, platform

   Mounting brackets for heavy attachments which can raise the vehicle [CA9], e.g. crane, elevating work platform
6. Floor assembly for special bodies [P61], e.g. box, platform

https://truckmanualshub.com/

Mounting areas

Feature	Advantage
• Factory-designed mounting points and mounting areas fine-tuned in consultation with implement manufacturers • Mounting area at front using mounting brackets [CA2], cable winch bracket [CH5] or front mounting plate [CP3]	• Simultaneous mounting of implements in conjunction with body • High cost effectiveness • Simple and standardised mounting devices • Payload gain from omission of body-mounting connections
• Mounting area at top using attachment fixtures [CD5], mounting brackets [CA9], floor assembly [P61] and [P69]	• Payload gain through omission of platform and direct mounting by means of frame mounting brackets • The Unimog chassis retains its full unobstructed scope of operation and functional reliability when the body is fitted • Minimal stress on body • Long service life for vehicle and equipment • Low overall centre of gravity, better driving stability
• Mounting area between the axles	• Fitting of trusses (e.g. slope support, front loader) or side attachments (cable winch, generator, etc.)
• Mounting area at front	• For mounting equipment on the front of the vehicle

Platform with tarpaulin

Platform

Platform and box-type body produced by qualified bodybuilders in compliance with the current body / equipment mounting directives.

https://truckmanualshub.com/

Optional equipment – mounting areas

Feature	Advantage
[CA2] Mounting brackets, front • Specially developed mounting points on front of vehicle frame	• For attaching cable winch brackets [CH5] and front-mounted implements, for example • High strength, enabling absorption of higher forces • No negative influences resulting from frame torsion
[CA9] Mounting brackets for heavy equipment (crane bodies) • Mounting brackets for attaching an external supporting frame • Modified vehicle packaging, to create space for mounts or supports	• Uniform interface between Unimog chassis and heavy add-on equipment • Suitable for heavy, permanently mounted equipment such as crane, elevating work platform, excavator attachment, drills, winch attachments, etc. • Double 3-point mounting retains torsional flexibility for the attached equipment and maintains the overall vehicle's off-road capabilities • High driving stability on the road and ideal adjustment off-road
[CD5] Attachment fixtures for non-MB bodies • For direct attachment of non-MB bodies • For direct mounting of an external floor assembly	• Attached equipment does not restrict off-road capabilities in any manner • Extreme torsion of the frame results in only minimal body stress
[CH5] Cable winch bracket for front cable winches • Specially developed mounting points for cable winch operations • Only possible with mounting brackets [CA2]	• High strength enables transmission of high tractive forces • Deployment of front cable winches with high tractive forces (up to 7000 daN) • No negative influences resulting from frame torsion

https://truckmanualshub.com/

Feature	Advantage
[CL2] Anchoring and loading lugs • Lugs on vehicle (front, middle rear)	• Simple and secure fixing of the vehicle when loading onto train, ship, aircraft
[CP3] Front mounting plate, DIN 76060 type B, size 3 • Integrated towing bracket (maximum tractive force 7.5 kN) • Implements mounted via claws / pockets and secured by means of swivelling bolts or collar bolts	• High strength resulting from connection of the attached equipment via mounting plate to the frame • Equipment can be transported at top speed • Swift changing / mounting of implements possible to enable other operations with the carrier vehicle
[P61] Floor assembly for special bodies • Simple and secure mounting of box-type bodies and fixed platform bodies on the floor assembly • Double 3-point mounting of the floor assembly	• Unimog chassis retains its full unobstructed scope of operation and functional reliability • No restriction of off-road capabilities • Minimal stress on body • Long service life for vehicle and equipment
[P69] Floor assembly for special bodies, extended • Extension of floor assembly [P61] for bodies up to body length of 4100 mm	• Unimog chassis retains its full unobstructed scope of operation and functional reliability • Minimal stress on body • Long service life for vehicle and equipment

https://truckmanualshub.com/

https://truckmanualshub.com/

https://truckmanualshub.com/

Technical Manual for extreme off-road Unimog BlueTec 6

Part B

Technical data

https://truckmanualshub.com/

Contents – Part B

Engine **86**
Engine data – OM934 86
Engine diagram – OM934 87
Filling capacities 88
Engine brake 88
Compressed air generation 89

Transmission **90**
Main transmission 90
Clutch 90
Vehicle speeds – U 4023 / U 5023 91
Vehicle speed conversion factor 92

Axles **93**
Suspension 93
Technical data on axles 93
Technical data on U 4023 rims 94
Technical data on U 5023 rims 95

Brakes **96**
Braking system 96

Cab exterior **97**
Exterior 97

Cab interior **98**
Interior 98

Auxiliary drives **99**
[N05] Engine PTO to rear, with flange 99
[N13]/[N16]/[N19] Transmission PTO 100

Hydraulics **101**
Technical data on single hydraulic system 101

Electrical system **102**
On-board electrical system 102
Lights 102

https://truckmanualshub.com/

Weights **103**
Permissible load values 103

Trailer operation **104**
Pin-type trailer hitch 104
Hook-type trailer hitch (not for civilian use) 104
Towing capacities – U 4023,
model designation 437.427, 170 kW 105
Towing capacity U 5023,
model designation 437.437, 170 kW 106

Wheels/tyres **107**
Tyre availability 107
Tyres (technical data) 108
Tyre load capacity 109
Speed allocations 110
MPT (multi-purpose tyres) 112
AS tyres 114

Dimensions **115**
Technical drawing for U 4023 BlueTec 6,
model designation 437.427 115
Technical drawing for U 5023 BlueTec 6,
model designation 437.437 116

General information **117**
Vehicle climbing resistance 117
Trailer climbing resistance 117
Tractive force diagram – U 4023 (8.8 t) 118
Tractive force diagram – U 4023 (10.3 t) 118
Tractive force diagram – U 5023 (14.1 t) 119
Tractive force diagram – U 5023 (14.5 t) 119

https://truckmanualshub.com/

Engine

Engine data – OM934

Model		OM934
Model designation		934.974
No. of cylinders/arrangement		4, vertical, in-line
Operating principle		4-stroke diesel direct injection
Rated power as per DIN	(kW [hp])	170 (231)
Max. torque	(Nm)	900
Rated engine speed	(rpm)	2200
Idle speed	(rpm)	720
Torque increase	(%)	22
Bore/stroke	(mm)	110/135
Total displacement	(cc)	5132
Weight, dry	(kg)	510
Injection pressure	(bar)	up to 2400
Compression ratio		17.6 : 1
Injection nozzles		10-hole injection nozzles
Valve arrangement		2 intake/2 exhaust valves
Number of crankshaft bearings		5
Fan drive		mechanical via propeller shaft; fan speed via electronically controlled viscous clutch
Cold start capability/(Z43)	(°C)	–15/–26
Engine oil + filter	(l)	17.5 max.
Cooling system with heater	(l)	36

https://truckmanualshub.com/

Engine diagram – OM934

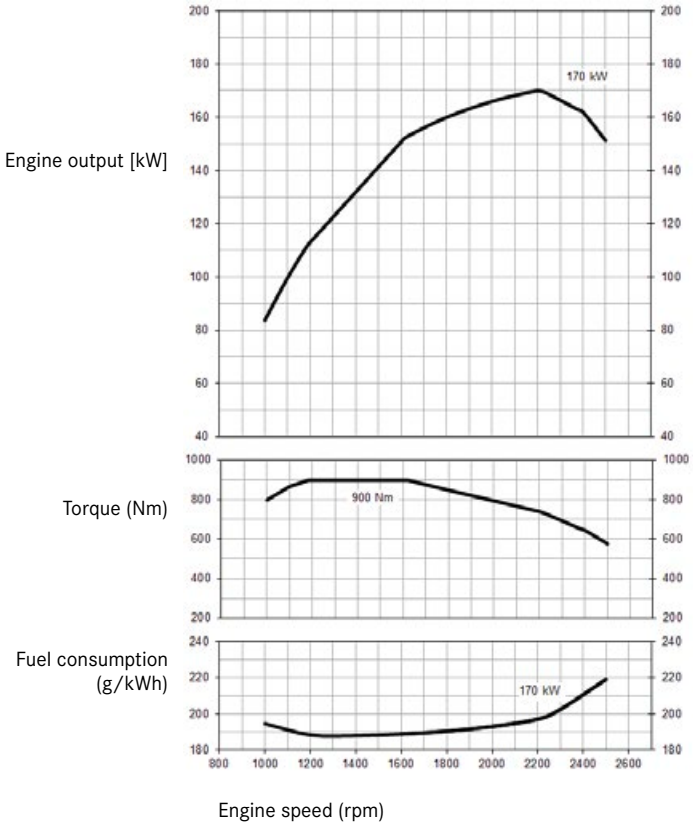

https://truckmanualshub.com/

Filling capacities

		Vehicle	
		U 4023	U 5023
Tank		437.427	437.437
Fuel, standard / enlarged	(l)	160/(235)	160/(235)
AdBlue®	(l)	18	18

Engine brake

Version	2-stage decompression brake
Max. output	178 kW for OM934
Operation	Multifunction lever

https://truckmanualshub.com/

Compressed air generation

Operating pressure	18 bar
Air compressor	Single-stage compression (393 cc)
Air treatment	Air drier with integrated pressure regulator
Delivery rate	380 l/min at rated engine speed 2200 rpm
Pressure tank	2 x 20 l + 1 x 5 l
Compressed-air connection	Tyre inflating valve at test connection of the reservoir

https://truckmanualshub.com/

Transmission

Main transmission

Model	UG 100-8/9.57-0.74 GPA Model designation: G 718.840
Design	Fully synchronised 8-speed manual transmission

Clutch

Design	Single-plate dry clutch
Diameter	395 mm
Lining	Organic, asbestos-free

https://truckmanualshub.com/

Vehicle speeds – U 4023 / U 5023

	Gear	Gear ratio		Vehicle speed (km/h)			
				Basic range		Off-road gears (x 3.19)	
		Forward	Reverse	Forward	Reverse	Forward	Reverse
U 4023	1	9.570	14.569	6.6	4.4	2.1	1.4
	2	6.635	10.101	9.6	6.3	3.0	2.0
	3	4.375	6.660	14.5	9.5	4.6	3.0
	4	3.219	4.900	19.7	13.0	6.2	4.1
	5	2.188	3.330	29.0	19.1	9.1	6.0
	6	1.517	2.309	41.9	27.5	13.1	8.6
	7	1.000	1.522	63.5	41.7	19.9	13.1
	8	0.736	1.120	86,4	56.7	27.1	17.8
U 5023	1	9.570	14.569	6.9	4.5	2.2	1.4
	2	6.635	10.101	9.9	6.5	3.1	2.0
	3	4.375	6.660	15.0	9.9	4.7	3.1
	4	3.219	4.900	20.4	13.4	6.4	4.2
	5	2.188	3.330	30.1	19.8	9.4	6.2
	6	1.517	2.309	43.4	28.5	13.6	8.9
	7	1.000	1.522	65.8	43.2	20.6	13.6
	8	0.736	1.120	89,6*	58.8	28.1	18.4

Rated engine speed: 2200 rpm
Final drive ratio: i = 6.53 (U 4023) i = 6.94 (U 5023)
U 4023 tyres: 335/80 R20 Michelin XZL (standard)
U 5023 tyres: 365/85 R20 Michelin XZL (standard)
* Speed limiter at 90 km/h
For conversion factors for vehicle speeds with other tyres: see “Vehicle speed conversion factor chart” on page 92.

https://truckmanualshub.com/

Vehicle speed conversion factor

Tyre size	Designation	U 4023	U 5023
335/80 R20	Conti MPT 81	0.994	
335/80 R20	Dunlop SP T9	0.994	
335/80 R20	Michelin XZL	Standard	
365/80 R20	Conti MPT 81	1.043	0.947
365/80 R20	Dunlop SP T9	1.043	0.947
365/80 R20	Michelin XZL	1.061	0.962
365/85 R20	Michelin XZL		Standard
395/85 R20	Michelin XZL		1.042
395/85 R20	Michelin XML		1.038
405/70 R20	Dunlop SP T9	1.029	0.934
405/70 R20	Michelin XM47	1.029	
405/70 R24	Dunlop SP T9	1.126	
405/70 R24	CGS AC70 G	1.118	
425/75 R20	Michelin XM47	1.092	
445/65 R22.5	Michelin XZL		1.026
445/65 R22.5	CGS AC70+		1.020
445/70 R24	Michelin XM47		1.068
455/70 R24	Dunlop SP T9		1.082

The vehicle speed conversion factor allows determination of the vehicle speed with use of the given tyres, by reference to the standard tyres.

https://truckmanualshub.com/

Axles

Suspension

Design	Portal axles at torque tube and transverse control arms, hub reduction gear
Differential lock	rear differential lock, front differential lock
Suspension	Progressively acting coil springs, telescopic shock absorbers
Stabiliser bars	on front and rear axles
Fording capability	800 mm (standard) 1200 mm [Z16]

Technical data on axles

	Axle model Front axle	Axle model Rear axle	Axle flange dimension (mm)	Wheel stud hole circle (mm)	Number of wheel studs	Final drive ratio
U 4023	737.367	747.367	2.183	275	8	6.53
U 5023	737.223	747.223	2250	335	10	6.94

https://truckmanualshub.com/

Technical data on U 4023 rims

Wheel rim:	Code	Track width (mm)	Tyre size
Drop centre rims 11 x 20	[RT2]	1953	335/80 R20 365/80 R20 405/70 R20
Semi-drop centre rims 11 x 20 SDC	[RH2]	1983	335/80 R20 365/80 R20 405/70 R20 425/75 R20
Drop centre rims 13 x 24	[RN3]	1983	405/70 R24

https://truckmanualshub.com/

Technical data on U 5023 rims

Wheel rim:	Code	Track width (mm)	Tyre size
Semi-drop centre rim 11.00 x 20 SDC	[R30]	1920	365/80 R20 405/70 R20
Flat-base rim 10.00V-20	[R32]	1928	365/85 R20 395/85 R20
Steep-shoulder rims 22.5 x 14.00	[R43]	1942	445/65 R22.5
Drop centre rims 13 x 24	[RN5]	1942	455/70 R24 445/70 R24

https://truckmanualshub.com/

Brakes

Braking system

System	Pneumatic dual-circuit disc brake system, Air dryer
Safety	4-channel ABS, automatic load-dependent brake
Parking brake	Spring braking system

https://truckmanualshub.com/

Cab exterior

Exterior

Body	All-steel cab with continuous roof, 3-point mountings, tilting
Glazing	Heat-insulating glass, Laminated glass windscreen 3-level windscreen washing system with intermittent wiping, windscreen washing system 2 rear wall windows
Mirrors	Heated exterior mirror on both sides, electrically adjustable, wide-angle rear-view mirror heated on both sides, kerb mirror
Doors	2 doors with armrests, crank windows
Safety	Tested in accordance with ECE-R-29/3*

* ECE-R: Regulations of the United Nations Economic Commission for Europe

https://truckmanualshub.com/

Cab interior

Interior

Interior equipment	Interior lighting with multiple functions, three sun visors for driver and co-drivers, continuous current socket 24 V/15 A
Seats	Fitted backrest and integrated head restraints on both sides, integrated 3-point inertia-reel seat belts on both sides, height, fore/aft and angle adjustment on both sides
Centre console	Control panel in dashboard (centre), switches arranged in blocks
Stowage compartments	Stowage compartment behind driver's seat at cab rear wall, compartments with bottle holder in the doors, 2 cup holders in the stowage box on tunnel, glove compartment
Air conditioning system	Combined heating / ventilation system, 4-speed rotary switch for blower, 4-speed rotary switch for recirculated air mode, defroster vents for windscreen and side windows, footwell vents on both sides
Displays	Instrument cluster with display
Safety	Safety locks in the doors, combined steering and starter lock at the steering column

https://truckmanualshub.com/

Auxiliary drives

[N05] Engine PTO to rear, with flange

Version	Drive from the engine crankshaft via intermediate gears, flange drive at the engine rear (on the right at approx. 1 o'clock, viewed in the direction of travel), activation by electro-pneumatically operated dog clutch only engageable when engine is not running and the ignition is switched on, to drive hydraulic or water pumps, power take-off at [HL4/HL5]
Gear ratio	i = 0.933 (overdrive)
RPM at rated engine speed 2200 rpm	2358 rpm
Rotational direction	Clockwise (in direction of travel)
Maximum torque	600 Nm (continually) 720 Nm (temporary)
Maximum continuous output	148 kW
Connection	4-hole flange (ISO 7646)

https://truckmanualshub.com/

[N13]/[N16]/[N19] Transmission PTO

Designation		[N13] High-speed transmission PTO with 6-hole flange	[N16] Gearbox PTO, high-speed, with 4-hole connection	[N19] Transmission PTO, very high speed, with 6-hole flange
Gear ratio		i=1.0	i=1.0	i=0.61
Rotational speed at engine speed 2200 rpm	(rpm)	2200	2200	3606
Rotational direction (in direction of travel)		left	left	right
Maximum torque	(Nm)	650	650	320
Maximum continuous output	(kW)	150	150	120
Connection		6-hole flange (ISO 7646)	4-hole connection (DIN 5480)	6-hole flange (ISO 7646)

https://truckmanualshub.com/

Hydraulics

Technical data on single hydraulic system

[H10] Hydraulic system with single spool valve	
Oil reservoir capacity (litres)	45
Consumption quantity (litres)	8
Displacement volume of pump (cc/revolution)	25,2
Pump type	Displacement pump
Drive system	Engine power take-off (i = 0.933)
System pressure (bar)	240
Delivery rate at engine speed 2200 rpm (l/min)	57
Basic power output (kW)	22,8
Control	Pressure build-up valve with switch in cab
Connections	2 flat-sealing hydraulic connections at front on left above bumper as seen in direction of travel; delivery line as flat-sealing plug; return line as flat-sealing socket

[H50] Hydr. connection, rear oil supply, 2x	
Connections	2 flat-sealing connections at rear on right of end cross-member as seen in direction of travel; delivery line as flat-sealing plug; return line as flat-sealing socket

https://truckmanualshub.com/

Electrical system

On-board electrical system

On-board electrical system	24V
Starter motor output	5.5 kW
Alternator output	2800 W (28 V – 100 A)
Battery	2 x 12 V / 100 Ah
Trailer socket	24 V, 15-pin
On-board power outlet	24V (cigarette lighter)
Diagnosis	Electronic vehicle management system with diagnostic interface and on-board diagnosis

Lights

Headlamps	Bi-halogen headlamps, dipped beam, high beam, parking lamps, daytime running lamps, headlight range adjustment, optional foglamps, halogen [L1H]
Tail lamps	6-chamber tail lamps, clearance, turn signal, brake, taillights, rear fog lamps, reflectors, back-up lamps
Turn indicators	on both sides at front and rear, additional side turn signal lamps on both sides
Lights	position lamps, licence plate illumination, hazard warning lamps

https://truckmanualshub.com/

Weights

Permissible load values

Permissible gross vehicle weight (t)	Permissible front axle load (t)	Permissible rear axle load (t)	Condition (only in conj. with)	Identification plate code	U 4023	U 5023
					3850	3850
7.5	4.1	4.6	LI >=137	[TB1]	X	
8.0	4.1	4.6	LI >=137	[TC5]	Standard	
8.8	4.2	5.0	LI >=140	[TD8]	X	
9.8	4.6	5.5	LI >=143	[TF7]	X	
10.3	4.6	6.0	LI >=147	[TG7]	X	
12.5	5.5	7.1	LI >=152	[TN1]		X
12.7	5.8	6.9	972G6780 (LI 151)	[TN8]		X
13.0	5.5	7.5	974G5620 (LI 154)	[TP1]		X
13.0	5.7	7.9	LI >=156	[TP3]		Standard
14.1	6.3	8.8	LI >=160	[TS5]		X
14.5	6.4	8.8	[V5W] + (LI >=160)	[TT5]		X

https://truckmanualshub.com/

Trailer operation

Pin-type trailer hitch

AHK	Make, type	Test symbol	Jaw size (mm)	Pin diam. (mm)	Perm. drawbar load (kg)	Drawbar ratio (kN)	DC value (kN)	V value (kN)	Hole pattern (mm)	End cross-member [Code]
[Q06]*	Annular spring 86 G 110	e1-00-0427	280 x170	38.5	500	66	35	15.5	83 x 56	(Standard)
[Q86]**	Rockinger 225 G 110	e1-00-0050	200 x 100	38.0	700 1500	85	68	24	120 x 55	(standard) [Q32]
[Q88]*	Rockinger 227 G 110 J	e1-00-0049	200 x100	38.5	500 1250	66	66	14	83 x 56	(Standard)
[Q97]**	Annular spring 4040 G 135 A	e11-00-6290	360 x 215	38.5	700 1.000	85	70	28	120 x 55	(Standard)

Hook-type trailer hitch (not for civilian use)

AHK	Make, type	Test symbol	Jaw size (mm)	Pin diam. (mm)	Perm. drawbar load (kg)	Drawbar ratio (kN)	DC value (kN)	V value (kN)	Hole pat-tern (mm)	End cross-member [Code]
[Q11]*	Annular spring Ruwg/K1D	F 3143	Hook	Towing lug	400	42	–	–	83 x 56	(standard) [Q32]
[Q16]*	Annular spring 65 G 125	–	Hook	Towing lug	250	25	–	–	83 x 56	(standard) [Q32]
[Q11]**	Annular spring Ruwg/K2D	F 3236	Hook	Towing lug	700	75	–	–	120 x 55	(standard) [Q32]
[Q16]**	Annular spring 65 G 135	–	Hook	Towing lug	700	70	–	–	120 x 55	(standard) [Q32]

* U 4023 only; ** Not approved in Germany

https://truckmanualshub.com/

Towing capacities – U 4023, model designation 437.427, 170 kW

	Permissible gross vehicle weight (kg)	Permissible towing capacity with trailer [kg]					Permissible gross combination weight (kg)
		Without brake	With inertia-activated brake	With continuous braking system			
				RDT and CAT		DBT	
				ECM [standard] + [Q06] / [Q88]	ECM [Q32] + [Q88]	ECM [standard] / [Q32] + [Q06] / [Q88]	
Trandk	7500	750	3500	5000	9000	11,200	18,700
	8000	750	3500	5000	9000	12,000	20.000
	8800	750	3500	5000	9000	13,200	22,000
	9,800	750	3500	5000	9000	14,700	24,500
	10,300	750	3500	5000	9000	15,400	25,700

Truck: minimum engine power 5 kW/t; Trailer load max. 1.5 x tractor vehicle
ECM: end cross-member
RDT: rigid draw-bar trailer
CAT: centre axle trailer
DBT: draw-bar trailer

https://truckmanualshub.com/

Towing capacity U 5023, model designation 437.437, 170 kW

	Permissible gross vehicle weight (kg)	Permissible towing capacity with trailer [kg]					Permissible gross combination weight (kg)
		Without brake	With inertia-activated brake	With continuous braking system			
				RDT and CAT		DBT	
				ECM [standard] + [Q86] / [Q97]	ECM [Q32] + [Q86] / [Q97]	ECM [standard] / [Q32] + [Q86] / [Q97]	
Truck	12,500	750	3500	5000	9000	18,700	31.200
	12,700	750	3500	5000	9000	19,000	31,700
	13,000	750	3500	5000	9000	19,500	32,500
	14,100	750	3500	5000	9000	19.900	34.000
	14,500	750	3500	5000	9000	19,500	34.000

Truck: minimum engine power 5 kW/t; Trailer load max. 1.5 x tractor vehicle
ECM: End cross-member
RDT: rigid draw-bar trailer
CAT: centre axle trailer
DBT: draw-bar trailer

https://truckmanualshub.com/

Wheels/tyres

Tyre availability

Tyre tread	Tyre size	Designation	Tyre code	LI	V (km/h)	U 4023	U 5023
						3850	3850
Field	405/70 R20	Michelin XM47	979-G67-/80	136	G	X	
Field	405/70 R24	CGS AC70 G	T34 G57-/11	149	G	X	
Field	425/75 R20	Michelin XM47	X22 G67-/80	148	G	X	
Field	445/70 R24	Michelin XM47	972 G67-/80	151	G		X
Off-road	335/80 R20	Dunlop SP T9	971 K56-/20	149	K	X	
Off-road	335/80 R20	Michelin XZL	971 K57-/80	141	K	Standard	
Off-road	365/80 R20	Dunlop SP T9	984 K58-/20	152	K	X	X
Off-road	365/80 R20	Michelin XZL	984 K56-/80	152	K	X	X
Off-road	365/85 R20	Michelin XZL	985-G56-/80	164	G		Standard
Off-road	395/85 R20	Michelin XZL	987-G56/80	168	G		X
Off-road	395/85 R20	Michelin XML	987-G58-/80	161	G		X
Off-road	405/70 R20	Dunlop SP T9	979 J58-/20	152	J	X	X
Off-road	405/70 R24	Dunlop SP T9	983 J57-/20	152	J	X	
Off-road	445/65 R22.5	Michelin XZL	P48 G56-/80	168	G		X
Off-road	445/65 R22.5	CGS AC70+	P48-G57-/11	160	G		X
Off-road	455/70 R24	Dunlop SP T9	974 G56-/20	154	G		X
On-road/off-road	365/80 R20	Conti MPT 81	984 K36-/10	152	K	X	X

https://truckmanualshub.com/

Tyres (technical data)

Tyre size	Designation	Tyre code	Tyre tread	LI	V (km/h)	Rolling circum-ference (mm)	Stat. radius (mm)	Width (mm)	Exter-nal di-ameter (mm)
335/80 R20	Dunlop SP T9	971 K56-/20	Off-road	149	K	3120	482	320	1035
335/80 R20	Michelin XZL	971 K57-/80	Off-road	141	K	3140	473	345	1037
365/80 R20	Conti MPT 81	984 K36-/10	On-road/ off-road	152	K	3275	502	380	1089
365/80 R20	Dunlop SP T9	984 K58-/20	Off-road	152	K	3275	502	378	1092
365/80 R20	Michelin XZL	984 K56-/80	Off-road	152	K	3330	501	372	1096
365/85 R20	Michelin XZL	985 G56-/80	Off-road	164	G	3460	520	368	1144
395/85 R20	Michelin XZL	987 G56-/80	Off-road	168	G	3604	542	388	1189
395/85 R20	Michelin XML	987 G58-/80	Off-road	161	G	3590	541	390	1187
405/70 R20	Dunlop SP T9	979 J58-/20	Off-road	152	J	3230	495	407	1076
405/70 R20	Michelin XM47	979 G67-/80	Field	136	G	3230	498	345	1082
405/70 R24	Dunlop SP T9	983 J57-/20	Off-road	152	J	3535	546	407	1178
405/70 R24	CGS AC70 G	T34 G57-/11	Field	149	G	3509	536	440	1172
425/75 R20	Michelin XM47	X22 G67-/80	Field	148	G	3430	513	440	1152
445/65 R22.5	Michelin XZL	P48 G56-/80	Off-road	168	G	3550	537	448	1168
445/65 R22.5	CGS AC70+	P48 G57-/11	Off-road	160	G	3530	541	419	1166
445/70 R24	Michelin XM47	972 G67-/80	Field	151	G	3695	568	467	1258
455/70 R24	Dunlop SP T9	974 G56-/20	Off-road	154	G	3745	576	475	1274

Tyre label

Since 1 November 2012 manufacturers of tyres for passenger cars and for light- and heavy-duty commercial vehicles have been required to produce tyre labels for their products. The tyre labels provide information on fuel consumption, wet adhesion and noise emission of the corresponding tyres and are provided in the form of labels or stickers.

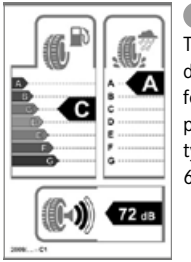

Tyre label

The labelling does not apply for “off-road professional tyres” (EC 661/2009).

https://truckmanualshub.com/

Tyre load capacity

LI	kg	LI	kg	LI	kg	LI	kg	LI	kg
101	825	121	1450	141	2575	161	4625	181	8250
102	850	122	1500	142	2650	162	4750	182	8500
103	875	123	1550	143	2725	163	4875	183	8750
104	900	124	1600	144	2800	164	5000	184	9000
105	925	125	1650	145	2900	165	5150	185	9250
106	950	126	1700	146	3000	166	5300	186	9500
107	975	127	1750	147	3075	167	5450	187	9750
108	1000	128	1800	148	3150	168	5600	188	10,000
109	1030	129	1850	149	3250	169	5800	189	10,300
110	1060	130	1900	150	3350	170	6000	190	10,600
111	1090	131	1950	151	3450	171	6150	191	10,900
112	1120	132	2000	152	3550	172	6300	192	11,200
113	1150	133	2060	153	3650	173	6500	193	11,500
114	1180	134	2120	154	3750	174	6700	194	11,800
115	1215	135	2180	155	3875	175	6900	195	12,150
116	1250	136	2240	156	4000	176	7100	196	12,500
117	1285	137	2300	157	4125	177	7300	197	12,850
118	1320	138	2360	158	4250	178	7500	198	13,200
119	1360	139	2430	159	4375	179	7750	199	13,600
120	1400	140	2500	160	4500	180	8000	200	14,000

Li: Load index per tyre

https://truckmanualshub.com/

Speed allocations

Maximum vehicle speed** (km/h)	Permissible tyre load capacity* (%)					
	F	G	J	K	L	M
15	165					
20	150					
25	135					
30	125					
35	119					
40	115					
45	113					
50	112					
55	111					
60	110					
65	107.5	108.5	108.5	108.5	108.5	108.5
70	105	107	107	107	107	107
75	102.5	105.5	105.5	105.5	105.5	105.5
80	**100**	104	104	104	104	104
85	97	102	103	103	103	103
90	94	**100**	102	102	102	102
95	90	97.5	101	101	101	101
100	85	95	**100**	100	100	100
105	–	92	98	100	100	100
110	–	87	96	**100**	100	100
115	–	–	93	97	100	100
120	–	–	88	93	**100**	100
125	–	–	–	–	–	100
130	–	–	–	–	–	**100**

* At speeds above the reference speed only lower tyre load capacities may be utilised.
In addition, the air pressure applicable for the 'tyre load capacity' chart may not be reduced.
** Interpolation permissible

https://truckmanualshub.com/

Speed allocations

Application-specific vehicle speed** (km/h)	Permissible tyre load capacity* (%)					
	F	G	J	K	L	M
Standstill	250					
Up to 5	210					
Up to 10	180					

* At speeds above the reference speed only lower tyre load capacities may be utilised.
In addition, the air pressure applicable for the 'tyre load capacity' chart may not be reduced.
** Interpolation permissible

https://truckmanualshub.com/

MPT (multi-purpose tyres)

Sector	Transport, building construction, energy, municipal, industry, expeditions, disaster relief
Area of use	On-road/off-road
Good suitability	Paved and unpaved roads, trails and areas; tractive operations
Less suitable	Soft ground with low load capacity

Conti MPT 81	Dunlop SP T9	Michelin XML
335/80 R20 365/80 R20	365/80 R20 405/70 R20 405/70 R24 455/70 R24	395/85 R20
Non-directional	Non-directional	Directional
Good winter service properties	Good off-road properties	

https://truckmanualshub.com/

MPT (multi-purpose tyres)

Sector	Transport, building construction, energy, municipal, industry, expeditions, disaster relief
Area of use	On-road/off-road
Good suitability	Paved and unpaved roads, trails and areas; tractive operations
Less suitable	Soft ground with low load capacity

Michelin XZL	Michelin XZL
335/80 R20 365/80 R20 365/85 R20 395/85 R20	445/65 R22.5
Non-directional	Non-directional

https://truckmanualshub.com/

AS tyres

Sector	Agriculture, energy sector, building construction, open-pit mining
Area of use	Fields, grassland, ground with low load capacity
Good suitability	Unpaved roads, trails and areas/high tractive operations
Less suitable	Winter service operations, paved roads/permanent high utilisation rate

Michelin XM47	CGS AC70 G	CGS AC70+
405/70 R20 425/75 R20 445/70 R24	405/70 R24	445/65 R22.5
Directional	Directional	Directional

https://truckmanualshub.com/

Dimensions

Technical drawing for U 4023 BlueTec 6, model designation 437.427

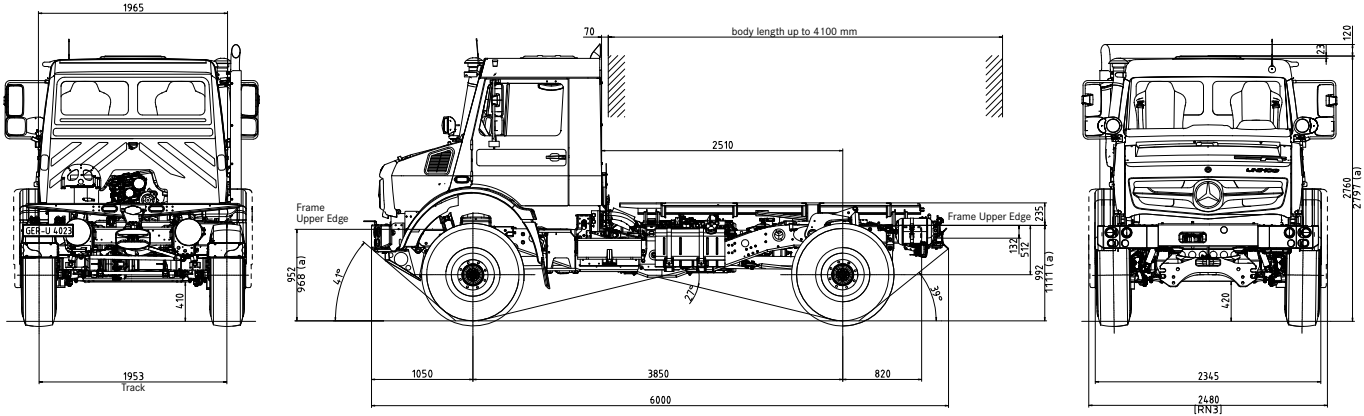

Shown with suspension compressed:
Front axle: 4100 kg
Rear axle: 3300 kg
GVW: 7400 kg

Vehicle shown with tyres: 335/80 R20

Turning circle ∅ 16.3 m

(a) unladen vehicle

All dimensions in (mm).

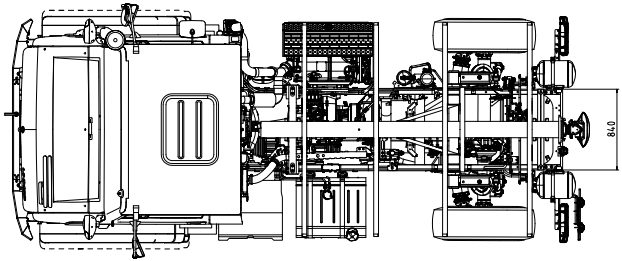

Vehicle shown with special equipment (including):

[K7A] Exhaust tailpipe upwards
[CP3] Front mounting plate, size 3
[L47] Additional headlamps for front attachments
[M5Z] Engine version Euro VI
[N05] Engine PTO
[N19] Very high-speed PTO
[P61] Floor assembly for special bodies
[Q97] Trailer hitch with large jaw
[R24] Disc wheel 11 x 20
[Z16] Special parts, fording capability

https://truckmanualshub.com/

Technical drawing for U 5023 BlueTec 6, model designation 437.437

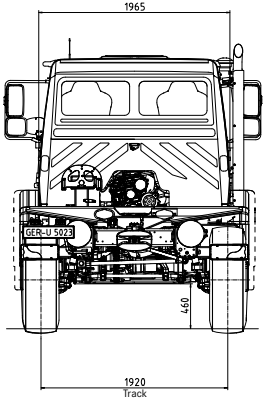

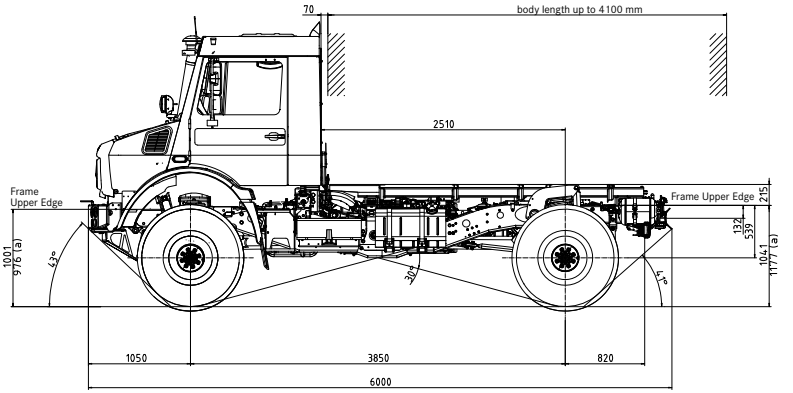

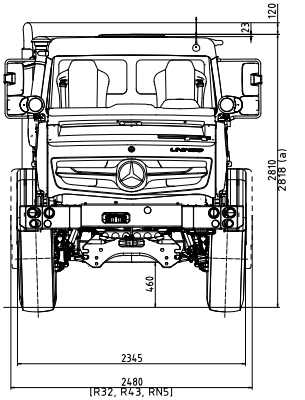

Shown with suspension compressed:
Front axle: 3400 kg
Rear axle: 8500 kg
GVW: 11,900 kg

Vehicle shown with tyres:
365/85 R20

Turning circle ⌀ 16.4 m

(a) unladen vehicle

All dimensions in (mm).

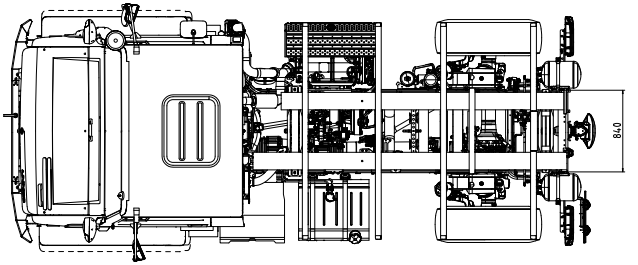

Vehicle shown with special equipment (including):

[K7A] Exhaust tailpipe upwards
[CP3] Front mounting plate, size 3
[L47] Additional headlamps for front attachments
[M5Z] Engine version Euro VI
[N05] Engine PTO
[N19] Very high-speed PTO
[P61] Floor assembly for special bodies
[Q97] Trailer hitch with large jaw
[R30] Disc wheel 11–20 SDC
[Z16] Special parts, fording capability

https://truckmanualshub.com/

General information

Vehicle climbing resistance

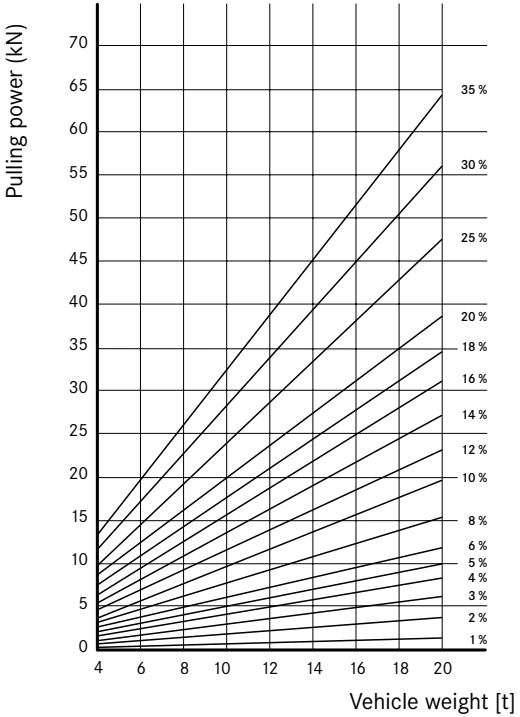

without rolling resistance (taken into account in pulling power diagram)

Trailer climbing resistance

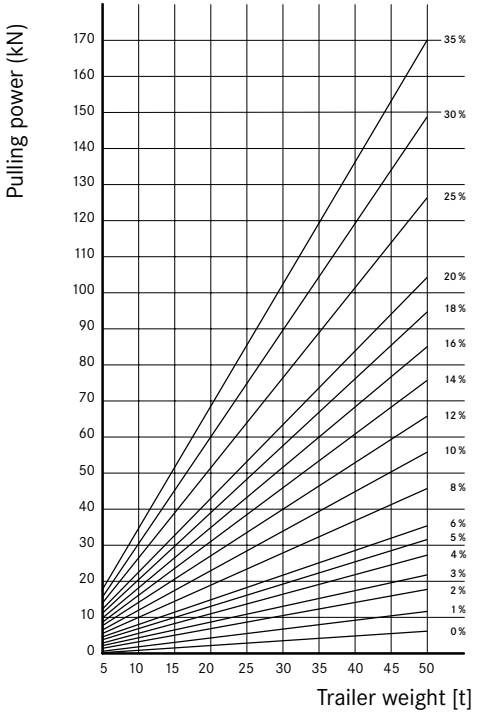

Deviation at 50 t: with rolling resistance 200 N/t: +2.5 kN, with rolling resistance 100 N/t: –2.5 kN

with rolling resistance 150 N/t

https://truckmanualshub.com/

Tractive force diagram – U 4023 (8.8 t)

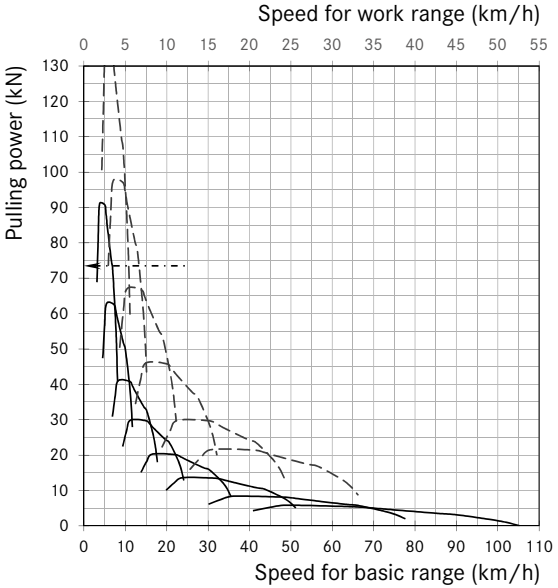

Engine output:	170 kW at 2200 rpm
Gearbox:	UG100-8 / 9.57-0.74
Axle ratio:	6.53
Tyres:	365/80 R20 MPT
Road surface:	concrete
Slip limit (μ=0.85):	73

Tractive force diagram – U 4023 (10.3 t)

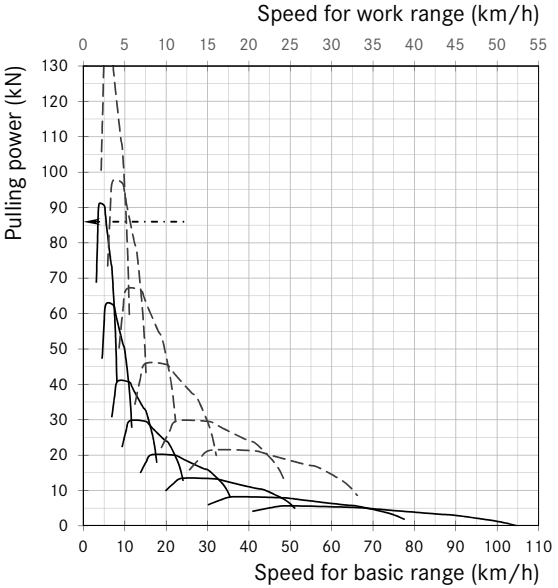

Engine output:	170 kW at 2200 rpm
Gearbox:	UG100-8 / 9.57-0.74
Axle ratio:	6.53
Tyres:	365/80 R20 MPT
Road surface:	concrete
Slip limit (μ=0.85):	86

https://truckmanualshub.com/

Tractive force diagram – U 5023 (14.1 t)

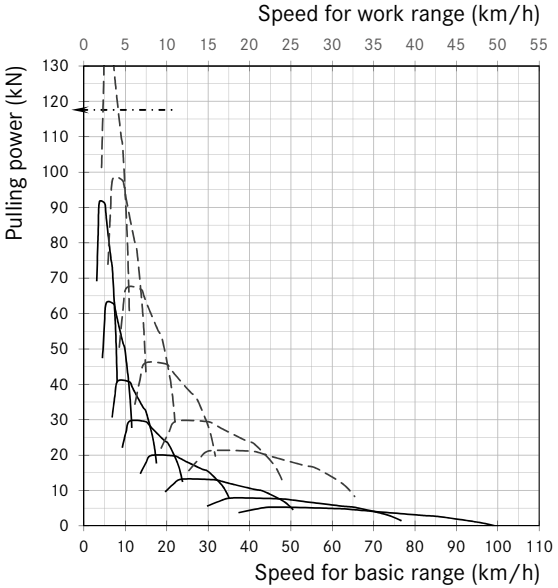

Engine output:	170 kW at 2200 rpm
Gearbox:	UG100-8 / 9.57-0.74
Axle ratio:	6.94
Tyres:	365/85 R20
Road surface:	concrete
Slip limit (μ=0.85):	118

Tractive force diagram – U 5023 (14.5 t)

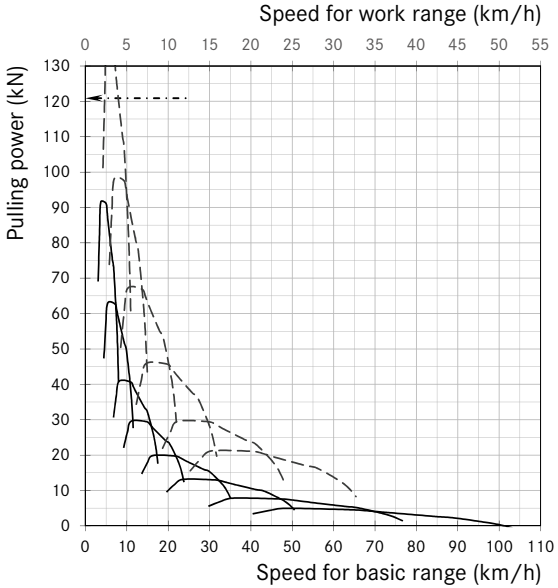

Engine output:	170 kW at 2200 rpm
Gearbox:	UG100-8 / 9.57-0.74
Axle ratio:	6.94
Tyres:	365/85 R20
Road surface:	concrete
Slip limit (μ=0.85):	121

Daimler AG Mercedes-Benz Special Trucks, D-76742 Woerth. Printed in Germany.