https://truckmanualshub.com/

SURPRISING COMFORTABLE EFFICIENT SERIE 5

SERIE 5

5-085 • 5-100 • 5-110 • 5-120

Landini®

Passion for Innovation.

https://truckmanualshub.com/

SURPRISING

SEI

Landini®

https://truckmanualshub.com/

NEW SERIE 5, CAPABLE OF SURPRISING

For over 130 years, the history of Landini has been marked by a passion for innovation. This long history now continues with the launch of the **Serie 5**, a range of utility tractors capable of surprising with their versatility, efficiency and comfort.

Boasting performance comparable to higher power tractors, the new **Serie 5** is a truly versatile utility tractor. Ideal for soil preparation activities like ploughing, tilling and harrowing, this handy tractor is equally perfect for sowing and haymaking. It will also handle with ease the most demanding livestock tasks and transport operations. The **Serie 5** tractor is built to perform a wide variety of jobs with maximum efficiency and reliability, while providing automotive-style superior comfort.

https://truckmanualshub.com/

HIGHLIGHTS

Cab

- Total View Slim cab: unequalled all-round visibility and maximum operating comfort
- Mechanical cab suspension system
- Driver's seat with optional air-suspension system
- Ergonomic controls and automotive-grade fit and finish
- 8.4-inch touch screen monitor for satellite guidance and ISObus control
- Low-profile roof for easy access to low-ceiling barns and sheds

Engine

- **Serie 5**: FPT 3.6L engine delivering up to 114 hp
- 5-085 model: FPT 3.4L engine delivering 75 hp
- Engines meeting Stage V/Tier 4 Final emissions regulations
- **Serie 5**: 135L fuel tank and 13L AdBlue tank
- 5-085 model: 103L fuel tank, without AdBlue

Transmission

- Speed Four transmission: 12FWD + 12REV speeds; 16FWD + 16REV speeds with creeper
- Power Four transmission with two-stage Hi-Lo powershift: 24FWD + 24REV speeds; 32FWD + 32 REV with creeper
- T-Tronic transmission with three-stage HML powershift: 36FWD + 12 REV speeds; 48FWD + 12 REV speeds with creeper

Axle

- Suspended front axle with brakes, full locking differential and electro-hydraulically operated four-wheel drive

Hydraulic system

- Open-centre hydraulic system with 82 l/min flow rate
- Rear hitch with up to 4500 kg lift capacity
- Rear 4-speed PTO optional

Designed with versatility in mind, the **Serie 5** is highly customizable to meet each farmer's specific needs. Tractor key features include:

- A suspended four-post cab with all-round visibility and ergonomically-positioned controls for maximum ease of operation. A newly-designed joystick allows for convenient and precise control of both Hi-Lo and HML transmissions and provides easy operation of implements, including the front loader. The low-profile roof makes access to low barns and sheds easier, while the transparent roof hatch provides extra visibility for front loader operations.
- New FPT 3.4L and 3.6L engines meeting Stage V/Tier 4 Final emissions regulations and delivering up to 114 hp.
- A variety of transmission options ranging from a Speed Four synchro shuttle transmission with 12FWD+12REV speeds to a T-Tronic transmission with HML powershift, power shuttle with modulation control and creeper that provides up to 48 FWD and 16REV speeds.
- A triple-pump hydraulic system providing a flow rate of up to 82 l/min for efficient operation of all hydraulic functions and up to six remote valves.
- A front hitch and PTO system and a Landini L20 front loader available as an option.
- A telematic system which monitors the activities of the tractor fleet, analysing the working data and performing remote diagnostics; a satellite-based guidance system for maximum working accuracy and an ISObus system for simple and efficient implement control.

The **Serie 5** tractor will surprise you with its reliable performance, exceptional versatility and automotive-style comfort, making it the perfect workmate for your daily farming activities.

https://truckmanualshub.com/

TECHNOLOGY 4.0

More precision, more productivity
page 32

EXHAUST AFTER-TREATMENT SYSTEM

Emissions under control
page 13

CAB

Perfect visibility
and first-class comfort
page 6

ENGINE

High performance
and efficiency
page 10

FRONT LOADER

More versatility,
more productivity
page 28

SUSPENDED AXLE

Comfort and safety
page 16

HYRAULIC SYSTEM

Innovative, for maximum
configuration flexibility
page 18

TRANSMISSION

Versatile, tailored
to suit every need
page 14

FRONT AND REAR HITCH

Powerful and precise
page 20

https://truckmanualshub.com/

COMFORT

landini

https://truckmanualshub.com/

When I sit inside this cab, I don't hear any noise or feel any vibration… And it's so comfortable! All controls are within easy reach and the visibility is exceptional. It's perfect for working with the front loader!

Aldous

TOTAL VIEW SLIM: UNCOMPROMISED VISIBILITY AND COMFORT

With the Total View Slim suspended cab and the front suspended axle, which isolate the operator from shocks and vibrations generated by uneven terrain, the new **Serie 5** achieves the goal of increasing productivity while reducing operator fatigue during long working days in the field. In addition, a new highly-efficient sound insulation system further reduces the noise level inside the cab. Everything inside the Total View Slim cab is designed to enhance operator comfort and convenience. The flat floor and the roomy interior create a spacious feel. The driver's seat is available with air suspension system and the telescopic tilt-adjustable steering column tilts with the instrument cluster. All controls are ergonomically placed and intuitive to operate. The interior with automotive-grade fit and finish and the roof-integrated air-conditioning system maintain a comfortable working environment all year round.

https://truckmanualshub.com/

The four-post cab design with its all-round glazing provides unobstructed view in every direction, making manoeuvring in tight spaces and at headlands easier and safer, while a transparent roof hatch provides extra visibility for loader operation. Up to 10 LED work lights ensure optimum illumination of the working area at night.

AIR CONDITIONING AND OPENING ROOF HATCH

Integrated into the cab roof, the air conditioning system ensures a comfortable working environment whatever the outdoor weather conditions. The opening transparent roof hatch improves ventilation while providing extra visibility for front loader operation.

BLUETOOTH AND DAB RADIO

The DAB radio with Bluetooth allows music listening also through an MP3 player, an AUX cable or a USB flash drive, while an integrated microphone enables the driver to make hands-free phone calls.

https://truckmanualshub.com/

HIGHLIGHTS

- Suspended cab: low noise and vibrations for maximum comfort
- Ergonomic and intuitive controls
- Telescopic steering wheel tilting with instrument panel
- High-quality climate control integrated into the cab roof
- Transparent opening roof hatch for extra visibility during front loader operations
- Up to 10 LED work lights for proper illumination during night work

SUSPENDED CAB

The cab suspension, combined with the suspended front axle and the air suspension seat, creates a protected working environment for the operator: two silent blocks at the front and two vibration dampers with Panhard rod and a travel of up to 96 mm at the rear absorb the shocks and vibrations transmitted by uneven terrain. In addition, the cab is designed to acoustically isolate the operator from external noise. All this makes the **Serie 5** tractor an ideal work companion that will reduce your fatigue while increasing your productivity.

ACCESS TO DRIVING POSITION

The four-post cab design and the rear-hinged doors make access to the driving position easy and safe. Wide, sturdy access steps and comfortable handrails fitted to the cab posts and to the doors allow operators to safely climb up and down the tractor.

WORK LIGHTS

Up to 10 powerful LED work lights provide all-round lighting for easy visibility during night work.

https://truckmanualshub.com/

HIGH PERFORM

landini

https://truckmanualshub.com/

*The engine of the new **Serie 5** is excellent. It performs great and uses little fuel. So I'm more productive and save money. And the maintenance is minimal, so I save time.*

Andy

FPT F36 ENGINE: BUILT FOR ULTIMATE EFFICIENCY

To meet the requirements of the new Stage V/Tier4 Final emissions regulations, Landini redesigned the engine/transmission combination of the **Serie 5** tractor in order to keep performance and efficiency at peak levels. The exhaust gas after-treatment system is no longer mounted onto the cab right post, but has been moved under the hood to provide full visibility during work.

The new **Serie 5** tractors are powered by FPT F36 3.6L four-cylinder turbo engines with multivalve technology, intercooler and common rail injection system. The three models in the range deliver 95, 102 and 114 hp and meet the Stage V/Tier 4 Final emissions regulations using DOC, DPF and SCR after-treatment technologies.

https://truckmanualshub.com/

landini

https://truckmanualshub.com/

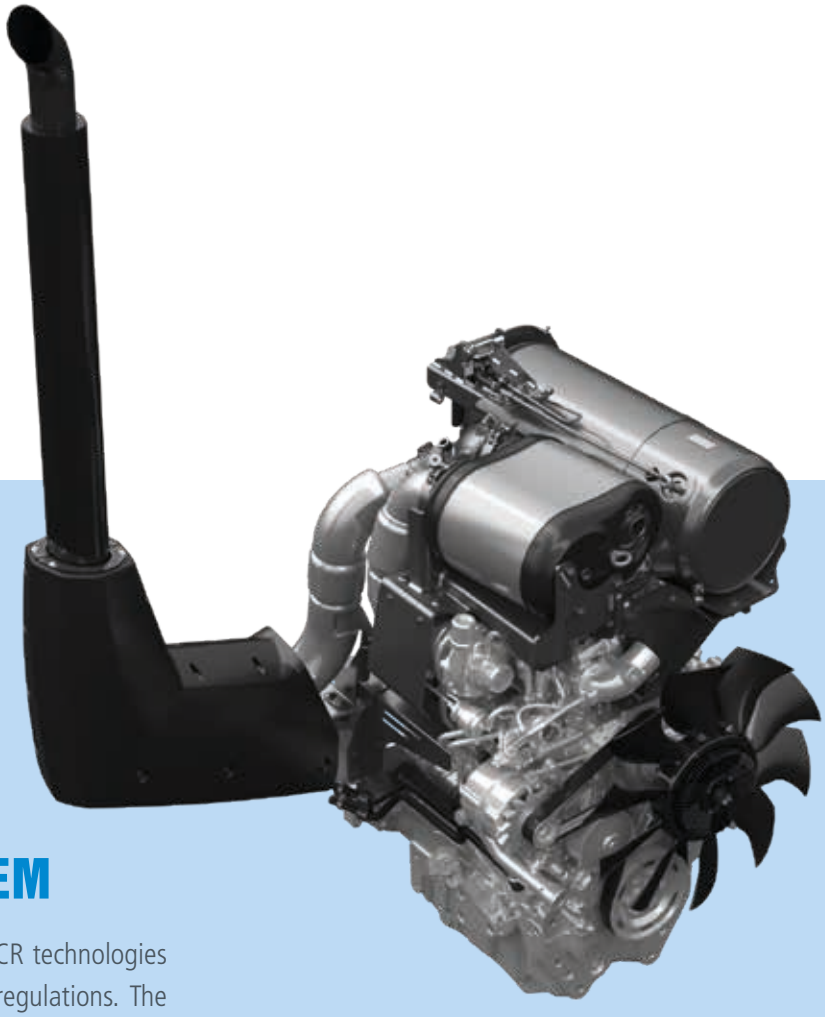

NEW POLLUTION CONTROL SYSTEMS: THEY ARE THERE, BUT YOU DON'T SEE THEM

The new **Serie 5** integrates DOC, DPF and SCR technologies to meet the Stage V/Tier4 Final emissions regulations. The exhaust gas after-treatment systems are tucked away under the hood to maximize operator visibility during work.

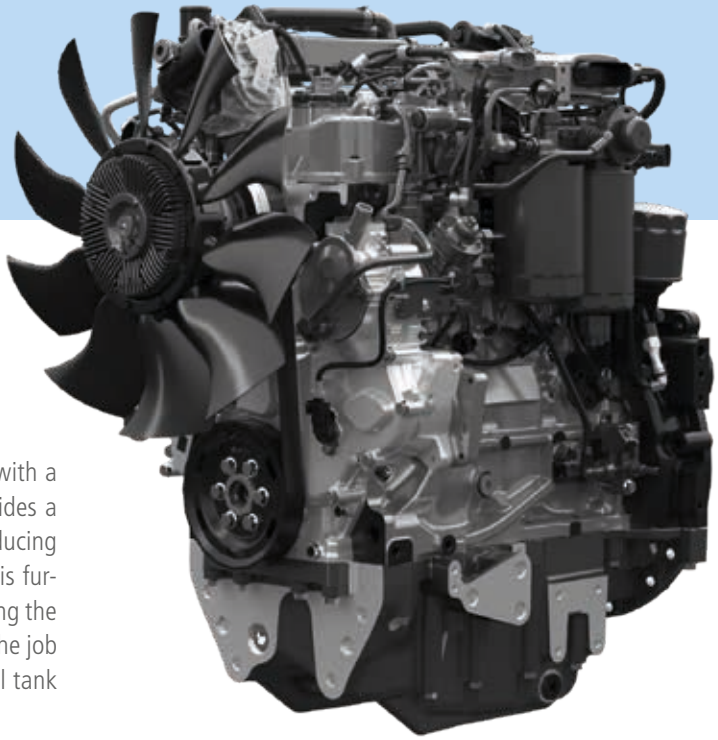

FUEL ECONOMY

The FPT F36 engines that power the **Serie 5** are equipped with a computer-controlled common rail injection system that provides a precisely measured amount of fuel to the engine, thereby reducing consumption while maximizing performance. Fuel efficiency is further enhanced with the Engine Memo Switch, a device allowing the operator to store and recall the engine speed that best suits the job in hand. The **Serie 5** tractor is equipped with a 135-litre fuel tank to ensure extended operation without refuelling.

https://truckmanualshub.com/

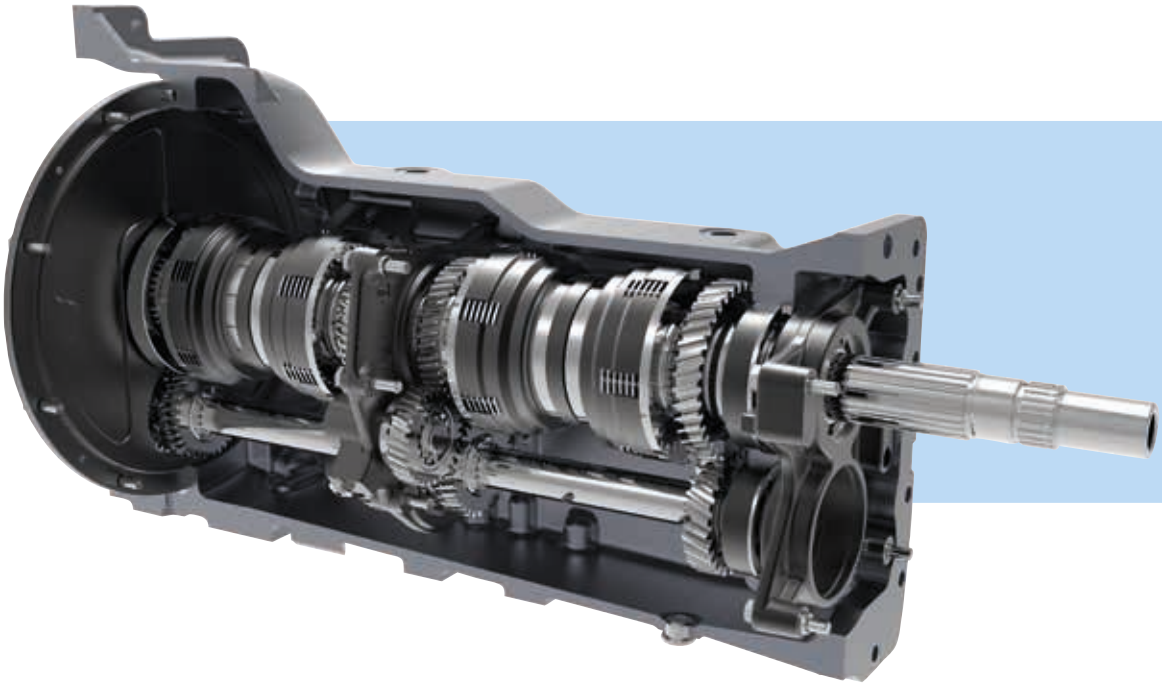

A CONFIGURABLE TRANSMISSION TO SUIT EVERY NEED

*My **Serie 5** has a 48-speed transmission. I use it for all kinds of tasks and I can say it's rugged and reliable in any situation… And it never lugs down.*

Joe

Designed with versatility in mind, the **Serie 5** offers up to eight transmission configurations to meet the specific needs of each farm:

1. Speed Four: 12FWD + 12REV speeds with synchro shuttle.

2. Speed Four: 24FWD + 24REV speeds with synchro shuttle and creeper.

3. Power Four with hydraulic Hi-Lo: 24FWD + 24REV speeds with synchro shuttle.

4. Power Four with hydraulic Hi-Lo: 32FWD + 32REV speeds with synchro shuttle and creeper.

5. Power Four with hydraulic Hi-Lo: 24FWD + 24REV speeds with power shuttle.

6. Power Four with hydraulic Hi-Lo: 32FWD + 32REV speeds with power shuttle and creeper.

7. T-Tronic with HML powershift: 36FWD + 12REV speeds with power shuttle.

8. T-Tronic with HML powershift: 48FWD + 16REV speeds with power shuttle and creeper.

Landini has further upgraded its range of rugged and reliable transmissions to enhance their performance in terms of power transmitted and fuel efficiency.

https://truckmanualshub.com/

PARK LOCK, SAFETY GUARANTEED

The power shuttle transmission can be optionally equipped with Park Lock, a mechanical locking device which locks the transmission for added safety when parking the tractor on steep inclines.

SPEED FOUR TRANSMISSION

The Speed Four transmission with left-hand steering-column synchro shuttle offers four synchronized speeds and three ranges providing 12 forward and 12 reverse gears. With additional creeper speeds, the transmission provides a total of 16 forward and 16 reverse gears with speeds as low as 360 m/h.

POWER FOUR ELECTROHYDRAULIC TRANSMISSION FOR TOTAL RELIABILITY

The Power Four electrohydraulic Hi-Lo transmission doubles the gears of the basic transmission providing 24 forward and 24 reverse speeds. The creep speed option further increases the number of available speeds to 32 forward and 32 reverse. The Power Four transmission can be specified with either a synchro or power shuttle with lever adjacent to the steering wheel. In addition, a de-clutch control function allows the operator to shift through all gears without using the clutch pedal.

T-TRONIC ELECTROHYDRAULIC TRANSMISSION FOR TOP PERFORMANCE

The T-Tronic transmission triples the 12 gears of the basic transmission providing 36 forward and 12 reverse speeds. The optional creeper offers up to 48 forward and 16 reverse gears and allows speeds as low as 310 m/h. The de-clutch button and the power shuttle allow the operator to shift through all gears and change from forward to reverse without using the clutch pedal. The shuttle response is electronically modulated and adjustable by the operator if required for different tasks.

https://truckmanualshub.com/

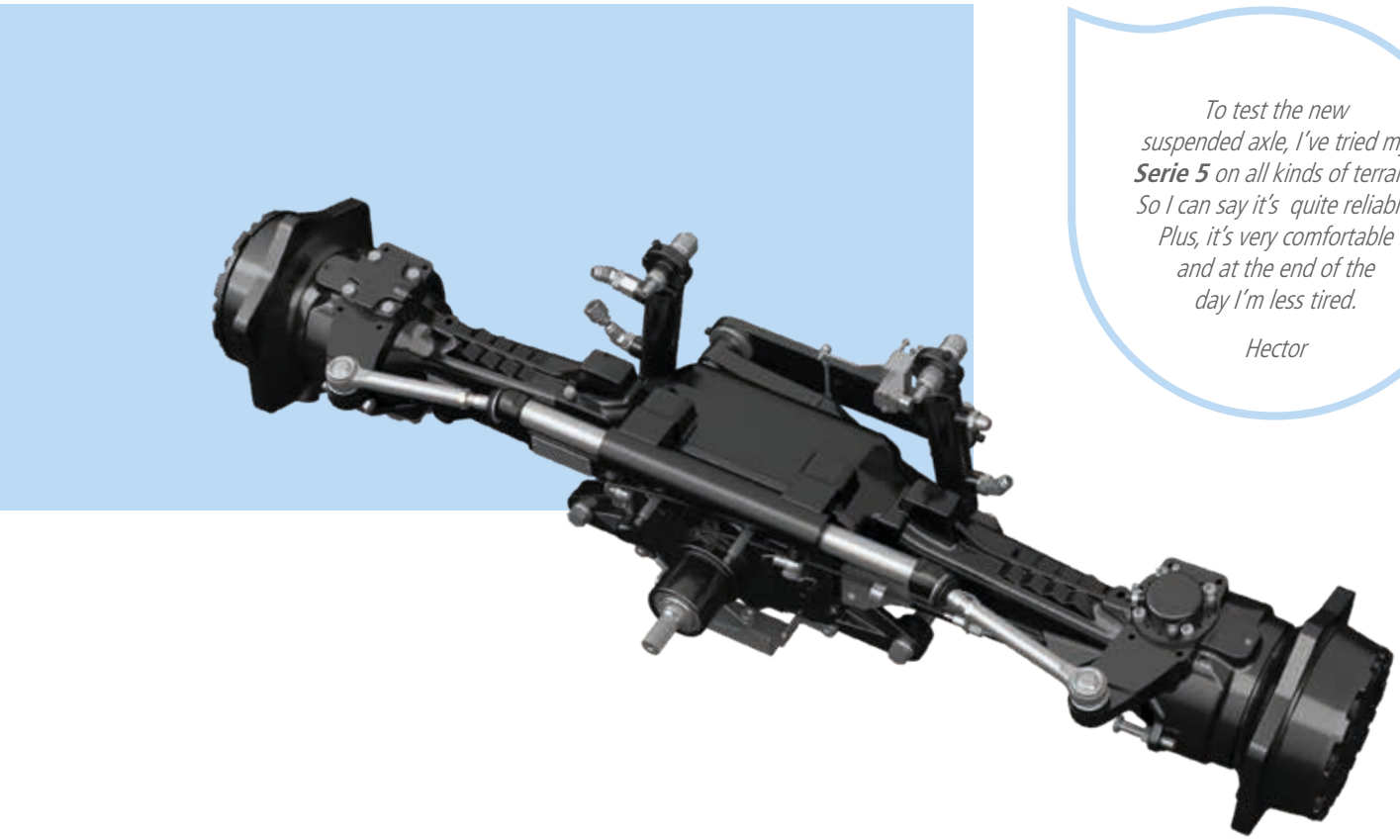

*To test the new suspended axle, I've tried my **Serie 5** on all kinds of terrain. So I can say it's quite reliable. Plus, it's very comfortable and at the end of the day I'm less tired.*

Hector

NEW SUSPENDED AXLE FOR SUPERIOR COMFORT

Rugged, sturdy and agile, Landini axles are designed to ensure reliability in any working conditions and stability during transport operations. The new suspended axle of the **Serie 5** tractor reduces shock loads over rough ground, providing a level of comfort and safety typically found in higher power tractors. Due to its rugged construction, the suspended front axle of the **Serie 5** ensures maximum reliability during transport as well as during front loader and front-mounted implement work. Also, its excellent ground clearance and 55-degree steering angle make the **Serie 5** tractor highly manoeuvrable in any situation. In addition, the hydrostatic drive delivers smooth steering control even at low engine rpm. If you are looking for a utility tractor that gives you more comfort and productivity, then the **Serie 5** is the right choice for you.

https://truckmanualshub.com/

INTEGRATED BRAKE SYSTEM (IBS)

The IBS braking system with wet disc brakes integrated into the front axle provides efficient braking on all four wheels. The system reduces stopping distances by 50% compared to a conventional 2WD braking system, thereby ensuring maximum safety on the road. When the front and rear brakes are activated, they produce a braking force proportional to the foot pressure applied on the brake pedal, thereby ensuring safe, controlled stopping power in any situation. Integrated with the trailer brakes, the IBS system will ensure efficient braking of the tractor-trailer combination for safe stopping on steep gradients.

AUTOMATIC 4WD AND DIFFERENTIAL LOCK ENGAGEMENT

The **Serie 5** tractor is equipped with combined front and rear differential locks to reduce wheel slip and maximize traction. The Twin Lock system automatically engages or disengages the differential lock and the four-wheel drive making headland turns easier and quicker for the operator.

https://truckmanualshub.com/

HIGHLIGHTS

- Front hitch and PTO for maximum versatility
- Triple pump with 82 l/min flow rate
- Up to six remote valves and one flow divider for control of up to 7 hydraulic functions
- Front hitch Category II capable of lifting up to 2200 kg

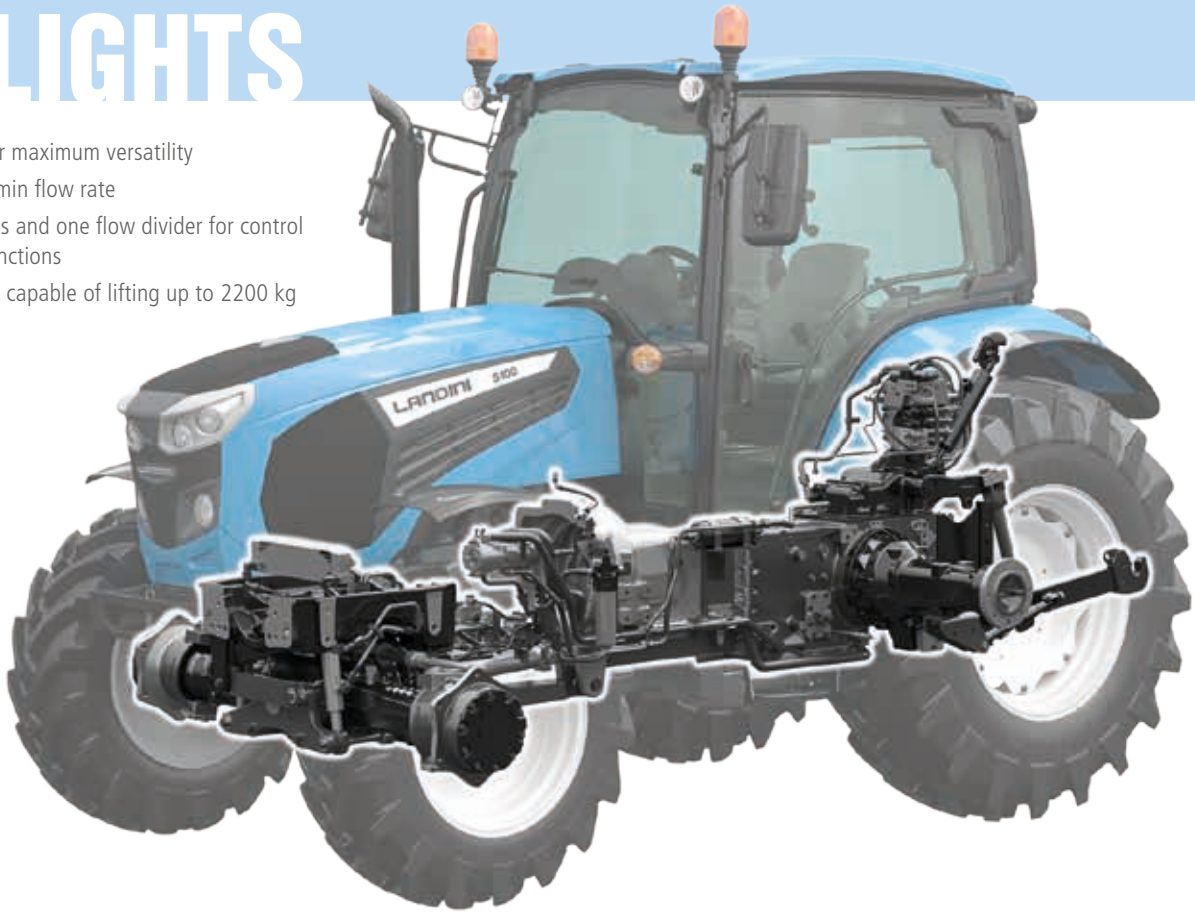

NEW HYDRAULIC SYSTEM FOR ENHANCED PRODUCTIVITY

My dealer asked me what kind of work I would be doing with the tractor, then he set up the hydraulic system for my application, making it perfectly tailored to my needs.

Frank

The open-centre hydraulic system of the **Serie 5** tractor can be equipped with up to 3 pumps with a total flow rate of 82 l/min. This increased hydraulic capacity allows the operator to:

> speed up work;
> carry out multiple tasks simultaneously;
> perform heavier-duty tasks;
> reduce consumption thanks to lower rpm engine operation;
> increase comfort and reduce fatigue thanks to lower engine noise and vibration;
> turn smoothly, including when performing heavy-duty tasks, thanks to a 32 l/min dedicated steering pump.

https://truckmanualshub.com/

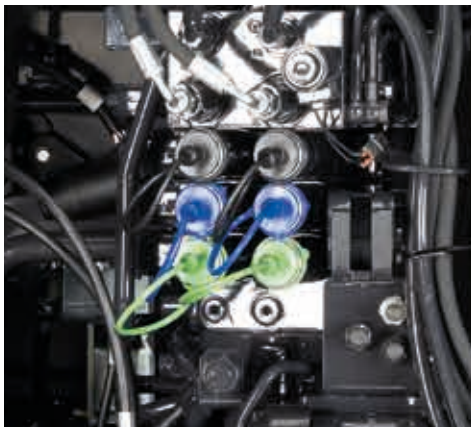

MORE REMOTE VALVES FOR MORE EFFICIENCY

The **Serie 5** can be equipped with up to six remote valves. Three valves are mechanically operated and one is electronically controlled. Two additional mid-mount remotes allow the use of front-mounted implements such as the front loader. One valve can be optionally equipped with a flow divider that splits and directs the flow to two separated outlets. The **Serie 5** can be equipped with four types of remote valves that can be used in combination to suit different application needs:

- **Standard**: double-acting;
- **Kick-out**: with automatic detent release;
- **Float**: for implements following the ground contour;
- **Hydraulic/Floating**: for the use of implements requiring a hydraulic motor. Each option allows the tractor to work with a front hitch, a front loader, a rear hitch and a variety of front- and rear-mounted implements for maximum efficiency and productivity. Conveniently placed high-quality quick-release couplings allow quick and easy connecting and disconnecting of hydraulic lines for fast operation. Also, the flow divider enables operator to set the hydraulic flow to be delivered to each remote.

https://truckmanualshub.com/

CONFIGURABLE REAR HITCH FOR UTMOST VERSATILITY

The **Serie 5** tractor can be equipped with three types of rear hitch to suit different application needs:

> **Mechanical**: simple and easy to use;

> **Mechanical with ELS system**: speeds up headland turns;

> **Electronic:** precise and efficient, repeats operations and recalls stored positions.

On all versions, external hitch controls are located on the rear fenders making it easier to attach implements from the ground. The three-point hitch Category II is capable of lifting up to 4500 kg with two assistor rams.

https://truckmanualshub.com/

MECHANICAL REAR HITCH WITH OPTIONAL ELS SYSTEM

The **Serie 5** tractors feature a mechanically-operated rear hitch that guarantees precise implement operation. To speed up headland manoeuvres, the tractor can be optionally equipped with Ergonomic Lift System (ELS), a device allowing the implement to be automatically lifted and lowered with the simple click of a button.

ELECTRONIC REAR HITCH

The electronically-controlled rear hitch is equipped with lower link draft sensing for precise implement control. To speed up headland operations, the implement can be automatically lifted and lowered with the simple click of a button. The Auto PTO feature will automatically disengage and reengage the PTO during headland turns for added productivity, while vibration dampers will reduce shock loadings during transport.

AUTOMATICALLY CONTROLLED PTO WITH 1 OR 4 SPEEDS

The Serie 5 is equipped with a rear 540-rpm PTO. A four-speed PTO providing 540/540E/1000/1000E rpm is also available as an option. A hydraulically-operated clutch enables smooth and modulated engagement of the PTO, ensuring a soft start-up of the implement. External PTO controls located on the rear fenders make it easier to attach implements from the ground.

FRONT HITCH AND PTO

A front hitch and PTO are available as an option to add greater versatility to the **Serie 5** tractor for applications using rear- and front-mounted implement combinations. Offering a maximum lift capacity of 2200 kg, the front hitch is Category II and features raise/lower and float controls. The 1000-rpm PTO with wet multi disc clutch is engaged electro-hydraulically. PTO controls are located both inside the cab and on the rear fenders making it easier to attach implements from the ground.

https://truckmanualshub.com/

UNIQUE

landini

https://truckmanualshub.com/

I chose the 75 hp because it's unique. And it doesn't require any urea additive, so I save money. It's compact and handy and can be used everywhere. Plus, it's so powerful that it feels like it has 15 hp more!

Simon

LANDINI 5-085, UNIQUE OF ITS KIND

The Landini **5-085** is a unique utility tractor, a smart vehicle that surprises with its efficiency, versatility and fuel economy. With its 75 hp, the **5-085** meets the Stage V/Tier4 Final emission regulations without using a urea-based emission reduction system. This urea-free solution not only generates continuous, significant cost savings but also reduces time-consuming tasks and checks. This amazing tractor is equipped with a powerful 3.4L engine capable of fully using its 75 hp.

Designed to provide outstanding traction including in difficult ground conditions, the engine of the **5-085** delivers up to 56% torque backup, the highest in the market. The transmission is available with HML three-stage powershift. The tractor is equipped with 34-inch tyres for improved ground clearance. This tractor can be further equipped with up to 8 LED work lights for optimum visibility during night work.

Its powerful performance converts the **5-085** into a true workhorse, making it perfect for soil preparation activities. Its excellent weight-to-power ratio also makes it ideally suited for operation on slopes and steep banks as well as for transport applications, while its compact size makes it perfect for use inside stables. The Landini **5-085** is the only tractor capable of combining the agility of light, compact tractors with the power of utility tractors.

https://truckmanualshub.com/

FPT F34 ENGINE: HIGH PERFORMANCE WITH OPTIMUM FUEL ECONOMY

Designed to deliver exceptional performance, the **5-085** at seems to have at least 10 hp in excess of its 75 hp rating. The tractor is powered by an FPT F34 3.4L four-cylinder turbo engine with multivalve technology, intercooler and common rail injection system. With a torque of 375 Nm at 1400 rpm and 56 per cent torque backup, this engine maintains constant power output between 1400 and 2200 rpm. A 103L high-capacity fuel tank allows the tractor to run for many hours of continuous operation without the need to refuel.

Equipped with DOC and DPF technologies, this 75-hp smart utility tractor meets the Stage V/Tier4 Final emission regulations without using a urea-based after-treatment system. This results in significant operating cost savings for farmers.

https://truckmanualshub.com/

AXLE

STURDY AND RELIABLE FRONT AXLE

The **5-085** tractor features a compact, rigid-mounted front axle that further enhances the tractor's compact size and agility. Sturdy and reliable, the front axle of the **5-085** ensures maximum efficiency and stability in any situation, from front hitch and front loader operations to transport applications. With its high ground clearance and 55-degree steering angle, the **5-085** tractor provides excellent manoeuvrability in confined spaces.

https://truckmanualshub.com/

A VERSATILE HYDRAULIC SYSTEM FOR MORE EFFICIENT OPERATION

The **5-085** features an open-centre hydraulic system with a twin pump that delivers 56 l/min to the remote valves and 30 l/min to the steering system for smooth driving on all terrains. The system can be equipped with up to three rear-mounted and two mid-mounted remote valves. One valve can be optionally equipped with a flow divider that splits and directs the flow to two separated outlets. The **5-085** tractor can be fitted with four different types of remotes: 1) **Standard**: double-acting; 2) **Kick-out**: with automatic detent release; 3) **Float**: for implements following the ground contour; 4) **Hydraulic/Floating motor**: for the use of implements requiring a hydraulic motor. Different types of remotes can be used in combination to meet user's specific needs, resulting in enhanced versatility. In addition, the high-quality quick-release couplings are conveniently placed to allow quick and easy connect/disconnect of hydraulic lines for time-saving operation.

https://truckmanualshub.com/

FUNCTIONAL AND STURDY HITCHES FOR PRECISE IMPLEMENT CONTROL

The **5-085** tractor features a sturdy, easy-to-use mechanically-operated rear hitch that guarantees precise implement control. To speed up headland operations, the tractor can be optionally equipped with Ergonomic Lift System (ELS), a device allowing the implement to be automatically lifted and lowered with the simple click of a button. Hitch controls are located both inside the cab and on the rear fenders making it easier to attach implements from the ground. The rear hitch features a Category II three-point linkage that provides a maximum lift capacity of 3900 kg. Available as an option, the Category II front hitch is capable of lifting up to 1700 kg. The 5-085 can be equipped with an electronically-controlled rear hitch with draft sensing on the lower link for precise implement control. The hitch raises and lowers automatically to make headland turns easier and faster. The Auto function engages or disengages automatically the PTO for enhanced tractor performance and productivity, while dampers absorb shocks and vibrations for maximum ride comfort.

https://truckmanualshub.com/

LANDINI FRONT LOADERS: EFFICIENCY THAT PAYS OFF

The sturdy Landini **L15** and **L20** front loaders have been specifically developed for the **Serie 5** tractor range. While the **L15** model is purpose-designed for the **5-085** tractor, the **L20** front loader fits all the other **Serie 5** models. Both front loaders offer a variety of features and benefits that further improve the tractor's performance and versatility.

> The new ergonomic joystick allows the operator to easily control a number of functions like raise/lower, load/unload, 3rd and 4th function, control of Hi-Lo and HML transmissions.

> To avoid crop damage, the loader frame is designed so as not to reduce tractor ground clearance.

> The front loader does not limit the tractor's turning radius.

> The loader features a suspension with two pressure accumulators placed between the cylinders that help absorb the shocks produced during loader work, ensuring smooth operation and reducing stress on the tractor's front axle.

> The loader's rigid hydraulic lines reduce oil overheating and simplify maintenance operations.

> The roof hatch of the tractor cab allows better visibility during front loader work.

https://truckmanualshub.com/

> The front loader can be fitted and used even when the tractor is equipped with a front-mounted hitch.

> The **Serie 5** is equipped with special supports designed to make fitting and removal of the front loader easier.

> The Euro Hitch implement carrier allows a wide range of implements to be fitted to the Landini front loaders.

> The bucket level gauge allows the operator to determine the angle of the implement to the ground from the tractor's seat, making manoeuvres easier and safer.

> Constructed from HLE steel, the Landini front loaders offer a high lift capacity: 1500 kg for the **L15** model and 1810 kg for the **L20** model.

Designed to be the perfect match for the **Serie 5** tractors, the **L15** and **L20** front loaders deliver maximum efficiency and productivity in any application.

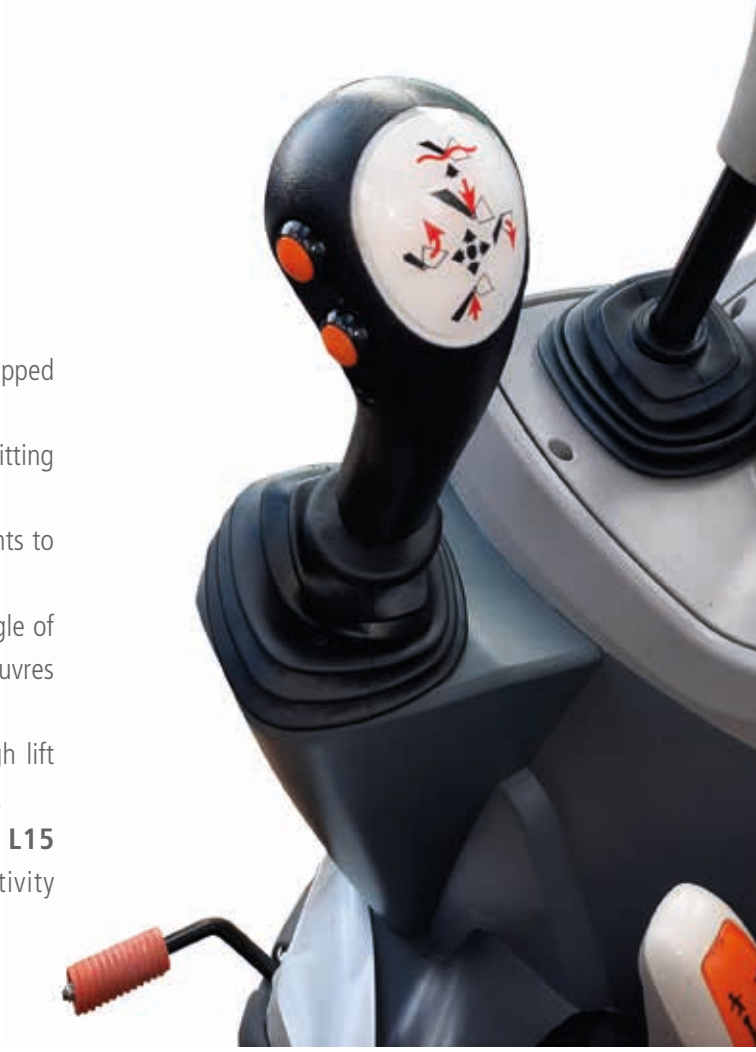

https://truckmanualshub.com/

landini

https://truckmanualshub.com/

SERIE 5 HC TRACTOR, THE TRUE HORTICULTURAL SPECIALIST

The **Serie 5 HC** is Landini's untiring specialty tractor for vegetable crops. Designed for superior comfort and productivity, the **Serie 5 HC** tractor is ideally suited for planting, fertilizing, irrigating and harvesting vegetables, fruits, corn, rice and other crops. Featuring large-diameter equal-sized wheels with narrow tyres, the **Serie 5 HC** tractor can achieve a ground clearance of up to 700 mm. The added clearance protects delicate crops minimising potential contact damage. The tractor also provides minimal soil compaction and with its impressive agility and small turning radius makes manoeuvring at headlands and in tight spaces easier than ever. The narrow tyres are type-approved for road transport. The **Serie 5 HC** is available with two power outputs, 100 hp and 110 hp.

https://truckmanualshub.com/

BENEFITS OF SATELLITE-BASED GUIDANCE AND ISOBUS SYSTEM

The satellite-based guidance and the ISObus system maximise efficiency and productivity while improving riding comfort and safety:

- Each implement operation is controlled with extreme accuracy. Implement can also be managed automatically.
- Reducing the travelled distance in the field reduces tractor and implement wear and saves fuel.
- The application of variable rate treatments eliminates skips and overlaps, minimizing product wastes.
- Precision farming reduces chemical residues.
- Report and pre-setting operations are simpler and can be conveniently done from home. This eliminates the need for expert operators.

https://truckmanualshub.com/

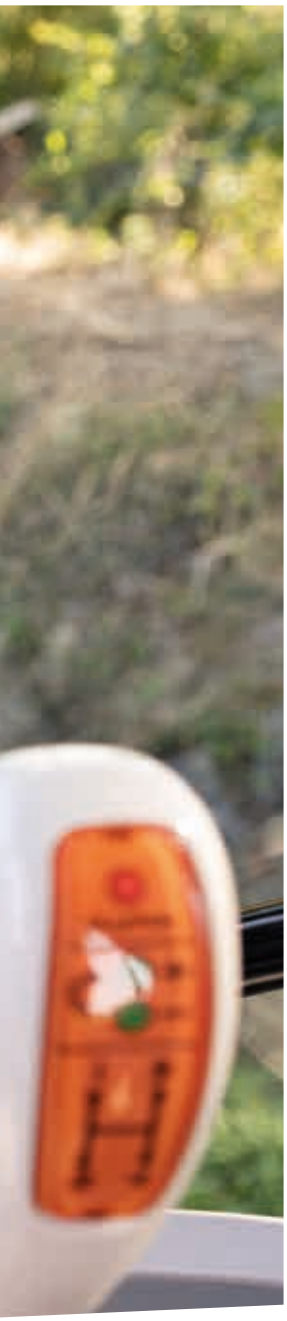

Telemetry and satellite-based guidance have changed my work. With more control and precision I achieve levels of productivity and cost efficiency I didn't think possible before …

Lawrence

PRECISION FARMING: AUTOMATIC PRODUCTIVITY

SATELLITE-BASED GUIDANCE: PRECISION PERFORMANCE

The optional satellite-based guidance system is controlled via a dedicated 8.4" touch screen monitor which manages two functions:

1. Precision Steering Management system: using the real-time kinematic (RTK) navigation method, the system provides precise steering control delivering up to 2cm pass-to-pass accuracy in row-crop operations. This results in greatly increased productivity.
2. Configuration and control of the ISObus system with management of advanced features such as ISO-TC and TC-GEO.

ISOBUS, TO SIMPLIFY AND OPTIMISE WORK

The **Serie 5** tractor range can be optionally equipped with an ISObus system, a protocol that allows data communication between tractor, implement and onboard computer. The ISObus system allows the operator to manage the implements via a simple touch screen monitor for increased operating efficiency and greater productivity.

https://truckmanualshub.com/

PRECISE

landini®

https://truckmanualshub.com/

LANDINI FLEET MANAGEMENT

To maximise efficiency and reduce operating costs, the activities of your tractor fleet are monitored via the Landini Fleet Management telematic system. Landini Fleet Management performs the following activities:

1. Monitors your fleet in real time: displays the exact position of all your tractors and monitors their efficiency measuring parameters such as speed, engine rpm, work progress and consumptions.
2. Analyses data: determines the efficiency and productivity of each tractor and calculates the profit margin of your business.
3. Performs remote diagnostics: identifies and resolves any issues with the tractors to reduce downtime and extend equipment life.
4. Stores working data: to eliminate errors and maximize productivity.

https://truckmanualshub.com/

QUICK MAINTENANCE TO GET YOU BACK UP AND RUNNING

Designed to deliver maximum versatility and efficiency, the **Serie 5** offers a variety of solutions to simplify and expedite maintenance.

1. The tilt-up hood opens wide to provide easy access to the engine compartment for maintenance.
2. The oil filler cap is placed in the lower part of the engine, so topping up of engine oil can be done without opening the hood.
3. The engine air filter is positioned in such a way as to facilitate cleaning and replacement.
4. The cooling radiators, mounted in the engine front, and the laterally-removable dust cover allow for simple and fast cleaning.
5. The fuel tank is conveniently placed under the cab to allow quick an convenient filling.
6. The air filters, fitted on the cab roof, are easily accessible for maintenance.
7. The oil level in the transmission can be conveniently checked through the oil filler cap with dipstick placed on the tractor rear.

https://truckmanualshub.com/

https://truckmanualshub.com/

RELIABILITY

https://truckmanualshub.com/

LANDINI SPARE PARTS AND SERVICE, TO GIVE YOU THE BEST ALWAYS

Landini is worldwide recognized as a reliable supplier of high-quality spare parts and after-sales services. Developed by the same engineers who design and manufacture the Landini tractors, genuine Landini parts are designed and manufactured to the highest quality standards to ensure tractors reliable performance and maximum safety.
The pluses of Landini's after-sales service include:
- Spare parts are delivered promptly and efficiently to Landini's dealers on the same day of order.
- Each part comes with a 12-month warranty and bears a non-falsifiable hologram which certifies its build quality and genuineness.
- Original Landini parts are reliable and convenient, as they enhance the working quality and efficiency of the **Serie 5** tractors.

The after-sales service is handled by our dealers through a team of highly-skilled, solution-oriented technicians who avail themselves of the latest diagnostic techniques. Choosing Landini means choosing excellence.

https://truckmanualshub.com/

landini

https://truckmanualshub.com/

LANDINI, A LONG HISTORY OF SUCCESS

Giovanni Landini had a dream: to change forever the history of farming by bringing the power of machines into the fields. He pursued his goal with great determination and, in 1884, he finally realised his dream by founding the Landini company. Landini's long history is marked by continued innovation in design and production processes and by a strong commitment to customers.

The simplicity and reliability that have always been the hallmarks of Landini tractors are perfectly combined in the company's utility range. In 1973, Landini launches the 5500, 6500, 7500 and 8500 series of utility tractors equipped with an innovative 12/4 transmission. In 1977, the company introduces the Large series, the first tractor range in Europe to be equipped with iso-mounted platform and to exceed 100 hp.

In 1994, Landini was acquired by the Argo Industrial Group. The acquisition enabled the company to expand its international presence by creating a worldwide network of subsidiaries and distributors. Giovanni Landini's dream was to make farm work less tiring and more productive. That dream is still alive today, since our quality of life is closely linked to the quality of agricultural production.

https://truckmanualshub.com/

SERIE 5

		5-100	5-110	5-120
ENGINE PERFORMANCE				
Rated power (97/68/EC - ISO TR 14396)	hp/kW	95.2/70	102/75	114/84
Max power (97/68/EC - ISO TR 14396)	hp/kW	95.2/70	102/75	114/84
Rated engine speed	rpm	2200		
Engine speed at max power	rpm	1900		
Max torque at 1400 rpm	Nm	395	430	460
Torque backup		30%	32%	28%
Manufacturer		FPT		
Engine type		F36		
Stage V / Tier 4 Final exhaust after-treatment system		DOC + SCRoF		
Cylinders / Displacement / Valves		4 / 3.6 l / 16		
Air filter system		dry air filter		
Air intake system		turbo aftercooled		
Fuel injection system		electronically-controlled high-pressure common rail system		
Maintenance interval		500 hours		
Cooling system		matrix radiator package		
Cooling fan		● belt-driven fan - ○ viscous fan		
Engine Memo Switch		●		
CAPACITIES				
Fuel tank	l	135		
AdBlue / DEF tank	l	13		
Cooling system	l	10		
CLUTCH				
Type	l	● mechanical		
TRANSMISSION				
Type		● mechanical - ○ electrohydraulic		
No. of gears - std		● 12 FWD + 12 REV with synchro shuttle (ACTIVE) ● 12 FWD + 12 REV with RPS with modulation control (DYNAMIC)		
No. of gears - option 1		○ 12 FWD + 12 REV with RPS with modulation control (ACTIVE) ○ 24 FWD + 24 REV with Hi-Lo powershift (DYNAMIC)		
No. of gears - option 2		○ 24 FWD +24 REV with Hi-Lo powershift (ACTIVE) ○ 36 FWD +12 REV with T-Tronic HML & RPS (DYNAMIC)		
Creeper		○		
Minimum speed without creeper	km/h	1.5 with Hi-Lo - 1.35 with HML (IR 700mm)		
Minimum speed with creeper	km/h	0.36 with 12+12 / 0.36 with Hi-Lo (IR 700mm) (ACTIVE) 0.33 with Hi-Lo / 0.3 with HML (IR 700mm) (DYNAMIC)		
Engine speed at 40 km/h	rpm	2038 with HI-Lo & HML (IR 750mm)		
Transmission control		hand lever		
Forward/Reverse shuttle		● Synchro Shuttle - ○ Reverse Power Shuttle (RPS) with modulation control (ACTIVE) ● Reverse Power Shuttle (RPS) with modulation control (DYNAMIC)		
REAR PTO				
Type		● mechanical - ○ electrohydraulic		
Speeds	rpm	● 540 - ○ 540 / 540E ○ 540 / 1000 (ACTIVE) ● 540 / 540E - ○ 540 / 1000 - ○ 540 / 540E / 1000 / 1000E with HML (DYNAMIC)		
Ground speed PTO		○		
Engine speed at rated PTO speeds - 540/540E/1000/1000E	rpm	1944 / 1377/ 1935 / 1621		
Rotation - type of spline shaft		clockwise (viewed from tractor rear) ● 1-3/8" PTO shaft with 6 splines - ○ 1-3/8" PTO shaft with 21 splines		
FRONT AND REAR AXLES				
Front rigid axle		● (ACTIVE-DYNAMIC)		
Front suspended axle		○ (DYNAMIC)		
Traction type		4WD		
Front differential lock		Hydralock full locking differential		
Rear differential lock		● electrohydraulic		
Rear axle - flanged type		●		
BRAKING SYSTEM				
Front braking system		● automatic 4WD engagement when braking - ○ with front brakes		
Rear braking system		ring piston hydraulic brakes		
Trailer braking system		● dual-line hydraulic brake as per MR - ○ single-line hydraulic brake or CUNA ○ dual-line pneumatic brake*		
Park Lock		○ (only with RPS)		

https://truckmanualshub.com/

HYDRAULIC SYSTEM		
Hydraulic pump for rear hitch & remote valves + steering - flow rate		● 62 + 32 l/min (ACTIVE-DYNAMIC) - ○ 82 + 32 l/min (DYNAMIC)
Rear remote valves - type, number		mechanical, 2 - 3 (ACTIVE) - mechanical up to 3 + electrical 1 (DYNAMIC)
Flow divider / Flow selector		○
Free-flow return		●
Mid-mounted remote valves - flow rate		2 mechanical with multifunction joystick - 80 l/min
Hydraulic oil take out	l	● up to 35
REAR 3-POINT HITCH		
Rear hitch control		● mechanical - ○ mechanical with ELS (ACTIVE) - ● electronic (DYNAMIC)
Category - coupler type		II - ● fixed ball ends - ○ quick-hitch hooks - ○ telescopic lower links
Max lifting capacity at hitch points	kg	○ 4500 (ACTIVE) - ● 4500 (DYNAMIC) with twin assistor rams
FRONT 3-POINT HITCH		
Front hitch		○
Category - coupler type		II - ● quick-hitch hooks
Max lifting capacity at hitch points	kg	2200
FRONT PTO		
Type - Speed	rpm	○ - electrohydraulic multidisc with modulated engagement - 1000
Engine speed at PTO rated speed	rpm	1920
Rotation - type of spline shaft		○ clockwise (viewed from tractor front) - ● 1-3/8" PTO shaft with 6 splines
CAB		
Total View Slim cab mounted on silent blocks		● (ACTIVE-DYNAMIC)
Landini mechanical Cab suspension		○ DYNAMIC
In-cab noise level	dB(A)	78 (ACTIVE) - 76 (DYNAMIC)
Filtration category		CAT 2
Heating / Climate control system		● heat and ventilation - ○ manual climate control
Opening front windscreen		●
Comfort pneumatic seat		● ACTIVE - ○ DYNAMIC
Trainer seat		○
Radio ready		●
Radio system		○ - radio DAB mp3, with 2 loud speakers, bluetooth, aux-in and integrated microphone
Work lights - ACTIVE version		● 4 work lights - 2 on roof front, 2 on roof rear ○ 8 work lights - 2 on roof front, 2 on roof rear, 2 on bonnet, 2 on handles (LED)
Work lights - DYNAMIC version		● 6 work lights - 2 on roof front, 2 on roof rear, 2 on bonnet ○ 8 work lights - 2 on roof front, 2 on roof rear, 2 on bonnet, 2 on handles (LED) ○ 10 LED work lights - 2 on roof front, 4 on roof rear, 2 on bonnet, 2 on handles
Beacon lights		● left side - ○ left and right side
ON-BOARD TECHNOLOGY		
PSM Precision Steering Management & ISObus - ready		●
PSM Precision Steering Management & ISObus - EGNOS full kit		○ - X25 monitor, AGS-2 aerial and AES-35 steering wheel
PSM Precision Steering Management & ISObus - RTK NTRIP full kit		○ - Argo Tractors Spare Parts
Landini Fleet Management - 3-year full plan subscription		○
Landini Fleet & Diagnostic Remote Management - 3-year full plan subscription		○
WEIGHTS AND DIMENSIONS		
Wheelbase	mm	2355
Max height over cab without beacon lights	mm	2623 - measured with tyres 380/70R24 - 480/70R34
Max height from top of cab to rear axle centre	mm	1873
Max length with front weights - Track width (min - max)	mm	4460 - (1958 - 2458) - measured with tyres 380/70R24 - 480/70R34
Steering radius	mm	5300 measured with tyres 380/70R24 - 480/70R34
Shipping weight - measured with average specs	kg	4000
Gross vehicle weight	kg	7000
Max front and rear tyre size - (Index Radius -IR)	mm	380/70R24 - 480/70R34 (IR 750mm)
Front weight support / Front tow pin		●
Front weights	kg	○ 6x36 - ○ 10x36
Rear weights	kg	○ 2x60 - ○ 4x60

Key: ● standard ○ option * aftermarket

https://truckmanualshub.com/

5-085

		5-085
ENGINE PERFORMANCE		
Rated power (97/68 CE - ISO TR 14396)	hp/kW	75 / 56
Max power (97/68 CE - ISO TR 14396)	hp/kW	75 / 56
Rated engine speed	rpm	2200
Engine speed at max power	rpm	1400 to 2200 rpm
Max torque at 1400 rpm	Nm	375
Torque backup		56%
Manufacturer		FPT
Engine type		F34
Stage V / Tier 4 Final exhaust after-treatment system		DOC-DPF
Cylinders / Displacement / Valves		4 / 3.4 l / 8 V
Air filter system		dry air filter
Air intake system		turbo aftercooled
Fuel injection system		electronically-controlled high-pressure common rail system
Maintenance interval		500 hours
Cooling system		matrix radiator package
Cooling fan		● belt-driven fan - ○ * viscous fan
Engine Memo Switch		●
CAPACITIES		
Fuel tank	l	103
CLUTCH		
Type		● mechanical
TRANSMISSION		
Type		● mechanical - ○ electrohydraulic
No. of gears - std		● 12FWD + 12REV with synchro shuttle - ○ RPS with modulation control
No. of gears - option 1		○ 24FWD + 24REV with RPS with modulation control & Hi-Lo
No. of gears - option 2		○ 36FWD + 12REV with RPS with modulation control & HML
Creeper		○
Minimum speed without creeper	km/h	1.61 with 12FWD + 12REV / 1.35 with Hi-Lo / 1.46 with HML (IR 700mm)
Minimum speed with creeper	km/h	0.36 with 12FWD + 12REV / 0.30 with Hi-Lo / 0.32 with HML (IR 700mm)
Engine speed at 40 km/h	rpm	1901 with Hi-Lo / HML (IR 700mm)
Transmission control		hand lever
Shuttle		● synchro shuttle - ○ Reverse Power Shuttle (RPS) with modulation control
REAR PTO		
Type		● mechanical - ○ electrohydraulic
Speeds	rpm	● 540/540E - ○ 540/1000 - ○ 540/540E/1000/1000E - ○ 540
Ground speed PTO		○
Engine speeds at rated PTO speeds 540/540E/1000/1000E	rpm	1944 / 2261 / 1935 / 1621
Rotation - type of spline shaft		clockwise (viewed from tractor rear) ● 1-3/8" PTO shaft with 6 splines ○ 1-3/8"PTO shaft with 21 splines
FRONT AND REAR AXLES		
Front rigid axle		●
Traction type		4WD
Front differential lock		● limited slip - ○ Hydralock full locking differential
Rear differential lock		● electrohydraulic
BRAKING SYSTEM		
Front braking system		● automatic 4WD engagement when braking
Rear braking system		ramp brakes
Trailer braking system		○ two-line hydraulic brake as per MR - ○ single-line hydraulic brake or CUNA ○ two-line pneumatic brake*
HYDRAULIC SYSTEM		
Hydraulic pump for rear hitch & remote valves + steering - flow rate		● 56 + 30 l/min
Rear remote valves - type, number		mechanical, 1 - 2 - 3
Flow selector/Flow divider		○
Free-flow return		●
Mid-mounted remote valves - type, number, flow rate		2 mechanical with multifunction joystick - 80 l/min
REAR 3-POINT HITCH		
Rear hitch control		● mechanical - ○ mechanical with ELS - ○ electronic
Category - coupler type		II - ○ fixed ball ends - ○ quick-hitch hooks - ○ telescopic lower links
Max lifting capacity at hitch points	kg	● 3900

https://truckmanualshub.com/

FRONT 3-POINT HITCH		
Front hitch		○
Category - coupler type		II - quick-hitch hooks
Max lifting capacity at hitch points	kg	1600
FRONT PTO		
Type - Speeds	rpm	○ - electrohydraulic multidisc clutch with modulated engagement - 1000
Engine speed at PTO rated speed	rpm	1920
Rotation - type of spline shaft		○ - clockwise (viewed from tractor front) - 1-3/8" shaft with 6 splines
CAB		
Total View Slim cab mounted on silent blocks		●
In-cab noise level	dB(A)	76
Filtration category		2
Heating / Climate control system		● - heating and ventilation - ○ manual climate control
Opening rear windscreen		●
Comfort pneumatic seat		○
Trainer seat		○
Radio ready		●
Radio system		○
Halogen work lights		● 2 rear - 2 front
LED work lights		○ 2 front - 4 rear - 2 on door handles
Beacon lights		● left and right side - o left side
ON-BOARD TECHNOLOGY		
PSM Precision Steering Management &ISObus - ready		●
PSM Precision Steering Managemen & ISObus - EGNOS full kit		○ - X25 monitor, AGS-2 aerial and AES-35 steering wheel
PSM Precision Steering Management & ISObus - RTK NTRIP full kit		○ - Argo Tractors Spare Parts
Landini Fleet Management - 3-year full plan subscription		○
Landini Fleet & Diagnostic Remote Management - 3-year full plan subscription		○
WEIGHTS AND DIMENSIONS		
Wheelbase	mm	2171
Max height over cab without beacon lights	mm	2485 - measured with tyres 280/85R24 - 420/85R30
Max height from cab roof to rear axle centre	mm	1828
Max length with front weights - Track width (min - max)	mm	4297 - (1643 - 2402) - measured with tyres 280/85R24 - 420/85R30
Steering radius		4700 - measured with tyres 340/85R24 - 420/85R34
Standard weight measured with average specs	kg	3700
Gross vehicle weight	kg	5800
Max front and rear tyre size - (Index Radius - IR)	mm	380/70R24 (IR 575mm) - 480/70R34 (IR 750mm)
Front weight support	kg	•
Front weights	kg	○ 6x36 - ○ 8x36
Rear weights	kg	○ 2x60 - ○ 4x60

Key: ● standard ○ option * aftermarket

https://truckmanualshub.com/

SERIE 5 HC

		SERIE 5-100 HC	SERIE 5-110 HC
ENGINE PERFORMANCE			
Rated power (97/68/EC - ISO TR 14396)	hp/kW	95.2/70	102/75
Max power (97/68/EC - ISO TR 14396)	hp/kW	95.2/70	102/75
Rated engine speed	rpm	2200	
Engine speed at max power	rpm	1900	
Max torque at 1400 rpm	Nm	395	430
Torque backup		30%	32%
Manufacturer		FPT	
Engine type		F36	
Stage V / Tier 4 Final exhaust after-treatment system		DOC + SCRoF	
Cylinders / Displacement / Valves		4 / 3.6 L / 16	
Air filter system		dry air filter	
Air intake system		turbo aftercooler	
Fuel injection system		electronically-controlled high-pressure common rail	
Maintenance interval		500 hours	
Cooling system		matrix radiator package	
Cooling fan		● belt-driven fan - ○ *viscous fan	
Engine Memo Switch		●	
CAPACITIES			
Fuel tank	l	135	
AdBlue / DEF tank	l	13	
Cooling system	l	10	
CLUTCH			
Type		● mechanical	
TRANSMISSION			
Type		● mechanical - ○ electrohydraulic	
No. of gears - std		● 12 FWD + 12 REV with synchro shuttle - ○ 12 FWD + 12 REV with RPS with modulation control	
No. of gears - option 1		○12 FWD + 12 REV with RPS with modulation control	
No. of gears - opiton 2		○ 24 FWD + 24 REV with Hi-Lo powershift ○ 24 FWD + 24 REV with Hi-Lo powershift & RPS with modulation control	
Creeper		-	
Minimum speed without creeper	km/h	1.19 (IR 800mm)	
Minimum speed with creeper	km/h	0.32 with 12+12 / 0.26 with Hi-Lo (IR 800mm)	
Engine speed at 40 km/h	rpm	1960 with HI-Lo (IR 800mm) 30 ECO	
Transmission control		hand lever	
Forward/Reverse shuttle		● Synchro Shuttle - ○ Reverse Power Shuttle (RPS) with modulation control	
REAR PTO			
Type		● mechanical - ○ electrohydraulic	
Speeds	rpm	● 540 - ○ 540/540E - ○ 540/1000	
Ground speed PTO		○	
Engine speed at rated PTO speeds - 540/540E	rpm	1944 / 1377 / 1917	
Rotation - type of spline shaft		clockwise (viewed from tractor rear) ● 1-3/8" PTO shaft with 6 splines - ○ 1-3/8" PTO shaft with 21 splines	
FRONT AND REAR AXLES			
Front rigid axle		●	
Traction type		● 4WD	
Front differential lock		Hydralock full locking differential	
Rear differential lock		● electrohydraulic	
Rear axle - flanged type		●	
BRAKING SYSTEM			
Rear braking system		ring piston hydraulic brakes	
Trailer braking system		● dual-line hydraulic brake as MR - ○ single-line hydraulic brake or CUNA	
Park Lock		○ (only with RPS)	
HYDRAULIC SYSTEM			
Hydraulic pump for rear hitch & remote valves + steering - flow rate		● 62 + 32 l/min	
Rear remote valves - type, number		mechanical, 2 - 3	
Flow divider / Flow selector		○	
Free-flow return		●	
Mid-mounted remote valves - type, number, flow rate		2 mechanical with multi-function joystick - 80 l/min	
Hydraulic oil take out		● up to 35	

https://truckmanualshub.com/

REAR 3-POINT HITCH		
Rear hitch control		● mechanical - ○ mechanical with ELS
Category - coupler type		II - ○ fixed ball ends - ○ quick-hitch hooks - ○ telescopic lower links
Max lifting capacity at hitch points	kg	● 3900 with twin assistor rams
CAB		
Total View Slim cab mounted on silent blocks		●
In-cab noise level	dB(A)	78
Filtration category		2
Heating / Climate control system		● heat and ventilation - ○ manual climate control
Opening front windscreen		●
Comfort pneumatic seat		○
Trainer seat		○
Radio ready		●
Radio system		○ - radio DAB mp3, with 2 loud speakers, bluetooth, aux-in and integrated microphone
Work lights		● 4 work lights - 2 on roof front, 2 on roof rear ○ 8 work lights - 2 on roof front, 2 on roof rear, 2 on bonnet, 2 on handles (LED)
Beacon lights		● left side - ○ left and right side
ON-BOARD TECHNOLOGY		
PSM Precision Steering Management & ISObus - ready		●
PSM Precision Steering Managemen & ISObus - EGNOS full kit		○- X25 monitor, AGS-2 aerial and AES-35 steering wheel
PSM Precision Steering Management & ISObus - RTK NTRIP full kit		○ - Argo Tractors Spare Parts
Landini Fleet Management - 3-year full plan subscription		○
Landini Fleet & Diagnostic Remote Management - 3-year full plan subscription		○
WEIGHTS AND DIMENSIONS		
Wheelbase	mm	2355
Max height over cab without beacon lights	mm	2870 - measured with tyres 9.5R48 - 9.5R48
Height from cab roof to rear axle centre	mm	2070
Max length with front weights - Track width (min - max)	mm	4400 - (1782-2542) - measured with tyres 9.5R48 4WD
Shipping weight - measured with average specs	kg	4300
Gross vehicle weight	kg	6000
Max front and rear tyre size - (Index Radius - IR)	mm	9.5R48 - 9.5R48 (IR 800 mm)
Front weight support / Front tow pin		•
Front weights	kg	○ 6x36 - ○ 10x36
Rear weights	kg	○ 2x60 - ○ 4x60

Key: ● standard ○ option * aftermarket

https://truckmanualshub.com/

Passion for Innovation.

Argo Tractors S.p.A.
via G. Matteotti, 7 | 42042 Fabbrico [RE] Italia
t. +39.0522.656.111 | f. +39.0522.656.476
webmaster@argotractors.com | www.argotractors.com

EN
6697627A1 - 05/2022
graphic design: **gruppo saldatori** | www.grupposaldatori.com
All data and illustrations provided in this brochure are for information purposes only and can be changed without notice