https://truckmanualshub.com/

COMIA C22

2Roto

SAMPO ROSENLEW

https://truckmanualshub.com/

COMIA SERIES 2Roto

SUPERIOR CAPACITY has a new standard COMIA 2Roto

https://truckmanualshub.com/

EFFICIENT CUTTING TABLES

Up to 6,9 meters.

CUTTING TABLE

Easy to connect, recognized for its geometrics, and fully hydraulic operations. These features can be found in the combine harvesters of the Comia-series. The nylon/plastic tines of the pick-up reel, which have been found to be effective, and the hydraulic header reverse put the finishing touches on this highly functional cutting table.

Side tilt comes as standard on the C22 model. The AHC, automatic header control comes as an option which makes easy to operate even the widest header width. Cutting table widths begin from 6,3 meters and go all the way up to 6,9 meters. The feeder auger on the 6,9 m header is chain driven, to ensure steady operating in every conditions.

-> 6,3m • 6,9m

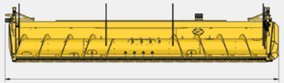

https://truckmanualshub.com/

THRESHING MECHANISM

The sturdy Heavy-Duty thresher cylinder used in the Comia-series ensures steady rotation even in the most demanding conditions. The 8 rasp bar cylinder has a diameter of 500 mm. The width of the threshing mechanism is 1,330 mm. The cylinder flanges are made of cast iron. There are flanges which have been fitted behind the rasp bars. This feature eliminates the possibility that the cylinder would become unbalanced when restarting the machine after threshing. On COMIA C22 -model there are two threshing cylinders. The system is known as TS-system, which operates with a pre-threshing cylinder. The pre-cylinder evens out the material when it arrives to the main threshing cylinder. The main harvesting happens on the threshing cylinders even this combine has two rotory units. That's why it is called a hybrid combine. The threshing cylinder speed operates on speed from 400 to 1200 rpm, with an automatic tensioning system on the variator belt.

FAN AND SHAKER SHOE

The large-diameter fan, with six fan blades, effectively blows to the shaker. The back and forth geometry of the shaker shoe has been changed, so it moves more than before. Also the distance between grain pan and upper sieve has been changed. The drop from grain pan section to sieve area are higher than before. The speed of the fan can be conveniently adjusted from the cab. The fan is also equipped with a handy bypass door, which can be opened if the fan effectiveness is to be reduced when, for example, threshing hay seeds.

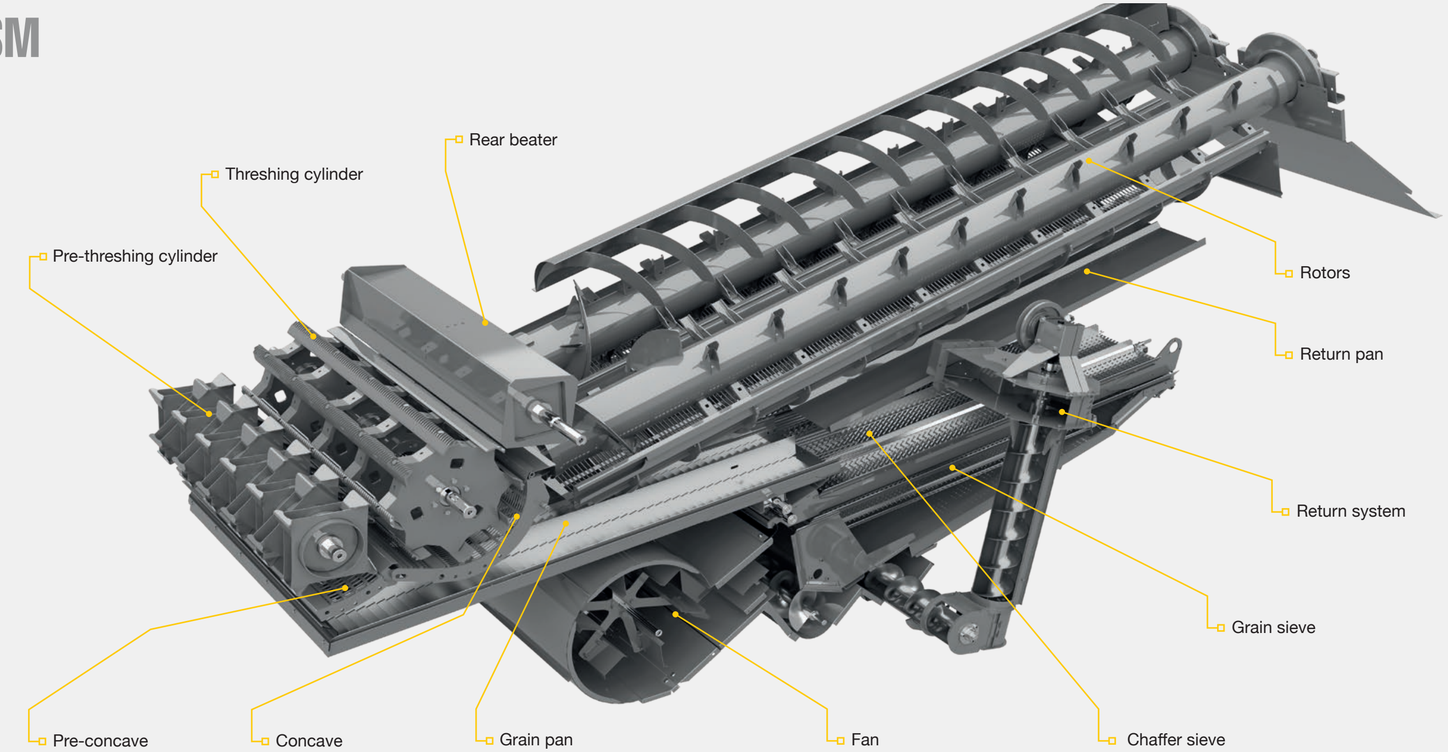

C22 threshing unit.

The chaffer is of the modern lamella sieve type. On the RV2 lamella sieve, every other lamella is bent down to efficiently prevent straw fragments from entering the grain tank. The grain sieve is the RV3 lamella sieve. Both sieve models, the RV2 and RV3, can be left more than 30% more open than a regular sieve without having unclean grain enter the grain tank.

2ROTO -HYBRID TECHNOLOGY

Double rotor system instead of the traditional straw walkers allows the Comia, more than 30% threshing output. Rotors are belt driven through bevel gears. For different crops you are able to change to three different speeds. The twinrotors compared to straw walkers are superior. The grain losses start usually with walker combines quite suddenly. As for the rotors you are able thresh with higher operating capacity. The rear beater cylinder are feeding the rotors the upperway and the centrifugal force of the rotor forces the grain gently through the concaves. For different crops, like corn, you are able to change between different concave options. Underneath the concaves there is an open return pan which takes the cereal back to grain pan.

https://truckmanualshub.com/

GOOD GRAIN ELEVATOR

Increasing the grain output demands more, in every corner of the combine. The good grain elevators diameter of the augers and chain elevator has been increased to match the need for output efficiency. This way the 2ROTO model can handle more tons per hour than a regular COMIA -model.

RETURN SYSTEM

The returns are blown back to return pan, from the left-hand side. The re-threshing of the material is done on the top of the auger, a familiar system that Sampo are still using on other COMIA -models.

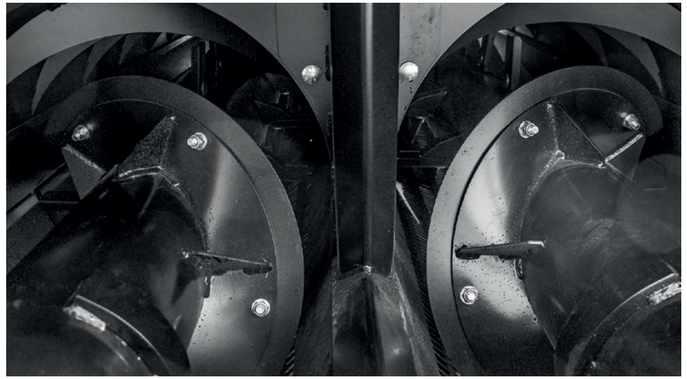

https://truckmanualshub.com/

- Productivity
- Efficient
- Ergonomy
- Great feeling
- Cost effective
- Serviceability
- Comfort
- Reliability
- Silence

https://truckma

AVARA – MORE THAN JUST GOOD LOOKS

Eight work lights, modern LED day driving lights, and a wide windscreen. The driver's clear visibility of the cutting table has been one of the things that were taken in to consideration when designing the new cab. The windscreen extends under the floor level improving visibility to both the cutting table and the feeder auger.

CONSOLE

The multi-function lever is only one part of the well-thought-out controls used in the Comia-series. All threshing-related activities, such as the controls of the machinery and cutting table, are located in the armrest. The console also has 12V and USB plugs.

ONE HAND CONTROL

All people are different and have different sized hands. This was a challenge for designing the new drive handle. Because all the important control switches are situated on the multi-function lever, they must be optimally positioned. The 45 degree design of the handle differs from that used in other handles on the market. Optimal results have been reached by having the handle designed by experts, who focus solely on ergonomics.

COMVISION II

The 12.3 inch 8:3 screen is the widest combine harvester screen on the market. You can easily control the touchscreen with one hand while threshing. The screen has been split into two views, a static and an alternative view. You can choose the alternative view yourself e.g. rpm monitoring view or reversing camera view. It is very easy to monitor threshing when at the same time you can see e.g. grain loss monitor, height of cutting table, forward speed, and warning lights. In the event of an alarm, ComVision II alerts you with a pop-up screen and an audible alarm.

https://truckmanualshub.com/

POWERLINE

ENGINE

The emission standards of diesel engines are constantly becoming stricter. The Sampo Comia fulfil strictest emission requirements of commercial machinery. Using the new SCR diesel technology, you preserve the environment and save 10% in fuel costs, when compared with Common Rail fuel systems. The exhaust gases of the engine are treated with AdBlue. Using the Comvision display in the cab, you can monitor the consumption of the additive. Comia-series are using the AGCOPower Tier5 engines.

TRANSMISSION

Driving the Comia is very easy. The traction lever is used to determine direction and speed. The wide tlres, which come as standard, ensure good driving properties. Another practical option is hydraulic four-wheel drive. It also allows the rear wheels to pull. This helps forward progress in difficult conditions and aids in preventing creating tracks in the field.

COMIA Techinical specifications		C22
CUTTING TABLE		
Standard width	m	6,90
optional widths	m	6,30
Cutting height	m	- 0,20...+1,20
Knife speed	strokes/min	1020
Header reverse	type	hydraulic
REEL		
Diameter	m	1,05
Speed range	rpm	0...50
Speed adjustment		hydraulic (autom.)
Electric fore/aft adjustment		hydraulic
PRE-THRESHING CYLINDER		
Width/diameter	m	1,33/0,40
Speed	rpm	420...1200
Concave area	m²	0,41
THRESHING CYLINDER		
Width/diameter	m	1,33/0,50
HD -cylinder		std
Number of rasp bars		8
Rasp bar type		changeable
Speed range	rpm	400…1200
Speed adjustment		elec.
CONCAVE		
Area	m²	0,62
Angle of wrap	°	105
Number of rasp bars		9
Steppless adj.range	mm	6…42
Concave adjustment		elec.
STRAW WALKERS		
Rotors		2
Total separation area	m²	3,1
SHAKER SHOE		
Top sieve	m²	2,30 + 0,40
Bottom sieve	m²	1,80
Total area	m²	4,50
Fan speed	rpm	515-1100

COMIA Techinical specifications		C22
STRAW CHOPPER		
High speed chopper		std, 3800 rpm
GRAIN TANK		
Capacity	m³	7,60
Discharge height	m	4,40
ENGINE		
		AGCO Power
Power	kW/hp	221/300
RPM/cylinder		2000/6
Fuel tank capacity	l	450
TRANSMISSION		
		Hydro
Final drives		closed final drives
TIRES		
Front		800/65R32
Rear		480/65R24
CAB		
		Avara
Seat model		Air cushion
Extra seat		Standard
Heater		Standard
Air conditioning		Standard
Radio		Option
Combine monitor		Comvision II
WEIGHT		
With standard header and chopper	kg	13600
DIMENSIONS		
Lenght w/o header	m	7,83
Transport height	m	3,99
Transport width w/o header with std tires	m	3,70
PLENTY OF OPTIONS AND ACCESSORIES		

https://truckmanualshub.com/

SATAGRAFIA_21049

SAMPO ROSENLEW

CO2rotoENG01

Sampo Rosenlew Ltd

Konepajanranta 2A

P.O. Box 50

FI-28101 Pori, Finland

Tel. +358 207 550 555

Fax. +358 2 632 6546

www.sampo-rosenlew.fi

The product development of the Sampo Rosenlew combines continues. Therefore the Company reserves the right to modify the products without prior notice and without obligation to make the same modifications to combines previously manufactured. The pictures in this brochure are selected from globally used material, as a result some details may vary from country to country. Check the information with your dealer.