https://truckmanualshub.com/

Pinguely-Haulotte

OPERATING AND MAINTENANCE INSTRUCTION

Self-propelled platform

STAR 8 - STAR 10

242 031 7880 - E 04.02 GB

ISO 9001
GROUPE PINGUELY HAULOTTE

ARTICULEES MATS TELESCOPIQUES CISEAUX TRACTEES

Haulotte®
L'ACCES A L'ESPACE

PINGUELY HAULOTTE • LA PERONNIERE - BP 9 - 42152 L'HORME • Tél. +33 (0) 4 77 29 24 24 • Fax SAV +33 (0) 4 77 31 28 11
email haulotte@haulotte.com • Web www.haulotte.com

https://truckmanualshub.com/

https://truckmanualshub.com/

GENERAL

You have just taken delivery of your mobile elevating work platform

It will give you complete satisfaction if you follow the operating and maintenance instructions exactly.

The purpose of this instruction manual is to help you in this.

We stress the importance:

- of complying with the safety instructions relating to the machine itself, its use and its environment,
- of using it within the limits of its performances,
- of proper maintenance upon which its service life depends.

During and beyond the warranty period, our After-Sales Department is at your disposal for any service you might need.

Contact in this case our Local Agent or our Factory After-Sales Department, specifying the exact type of machine and its serial number.

When ordering consumables or spares, use this documentation, together with the «Spares» catalogue so as to receive original parts, the only guarantee of interchangeability and perfect operation.

Caution !
This manual is supplied with the machine and is included on the delivery note.

REMINDER: You are reminded that our machines comply with the provisions of the «Machines Directive» 89/392/EEC of June 14th 1989 as amended by the directives 91/368/EEC of June 21st 1991, 93/44/EEC of June 14th 1993, 93/68/EEC of July 22nd 1993 and 89/336/EEC of May 3rd 1989, directive 2000/14/CE and directive EMC/89/336/CE.

Caution !
The technical data contained in this manual cannot involve our responsibility and we reserve the right to proceed with improvements or modifications without amending this manual.

CONTENTS

1 - GENERAL RECOMMENDATIONS - SAFETY 1

1.1 - GENERAL WARNING 1

1.1.1 - Manual 1

1.1.2 - Labels 1

1.1.3 - Safety 1

1.2 - GENERAL SAFETY INSTRUCTIONS 2

1.2.1 - Operators 2

1.2.2 - Environment 2

1.2.3 - Using the machine 2

1.3 - RESIDUAL RISKS 4

1.3.1 - Risks of jerky movements and tipping over 4

1.3.2 - Electrical risk 4

1.3.3 - Risk of explosion or burning 4

1.3.4 - Risks of collision 4

1.4 - INSPECTIONS 4

1.4.1 - Periodic inspections 4

1.4.2 - Examination of machine suitability 5

1.4.3 - State of conservation 5

1.5 - REPAIRS AND ADJUSTMENTS 5

1.6 - VERIFICATIONS WHEN RETURNING TO SERVICE 5

2 - PRESENTATION 7

2.1 - IDENTIFICATION 7

2.2 - MAIN COMPONENTS 8

2.3 - WORKING AREA 9

2.3.1 - Working area for the STAR 8 mast 9

2.3.2 - Working area for the STAR 10 mast 10

2.4 - TECHNICAL DATA 11

2.4.1 - STAR 8 / 10 technical data: 11

2.4.2 - Dimensions of the STAR 8 and STAR 10 masts 11

2.5 - LABELS 13

2.5.1 - Label positioning 13

2.5.2 - Yellow labels: 16

2.5.3 - Red labels: 16

2.5.4 - Miscellaneous labels: 17

2.5.5 - Specific labels for Holland: 17

2.5.6 - Specific labels for Australia: 17

3 - OPERATING PRINCIPLE 19

3.1 - HYDRAULIC CIRCUIT 19

3.1.1 - Turntable orientation, mast telescoping, jib lifting movements 19

3.1.2 - Steering movement 19

3.1.3 - Mast telescoping and jib lifting cylinders 19

3.1.4 - Turntable rotation 19

3.1.5 - Manual emergency movement 19

3.2 - ELECTRIC CIRCUIT 20

3.2.1 - Electronic speed chopper 20

3.2.2 - Contactor plate 20

3.2.3 - Direct electric travel 20

3.2.4 - Tilt control up to 3° 20

3.2.5 - High travel speed 21

3.2.6 - Wheel motor brake release 21

4 - USE 23

4.1 - SAFETY SYSTEMS 23

4.1.1 - Movement (control from the "paltform" station) 23

4.1.2 - Battery discharge 23

4.2 - UNLOADING - LOADING - MOVING 23

4.2.1 - Unloading by lifting 23

4.2.2 - Unloading by trunk 24

4.2.3 - Unloading with ramps 24

4.2.4 - Loading 25

4.2.5 - Moving 25

4.3 - OPERATIONS BEFORE THE FIRST OPERATION 26
4.3.1 - "Turntable" control station 26
4.3.2 - "Platform" control station 26
4.3.3 - Checks before operation 27
4.4 - BEFORE EACH USE 28
4.4.1 - Switching power on 28
4.4.1.1 - Movement tests 28
4.4.1.2 - Switching to the "platform" control 28
4.4.2 - Operations from the platform. 28
4.4.3 - Testing the platform control station 29
4.5 - STANDBY AND EMERGENCY OPERATIONS: 29
4.5.1 - Standby or emergency procedure 29
4.5.2 - Manual pump emergency operation. 29
4.5.3 - Wheel brake release 30
4.5.4 - Emergency operation 30
4.6 - BATTERY CHARGE STATE CHECK / TIMER 30
4.7 - USING THE BUILT-IN CHARGER 30
4.7.1 - Characteristics 30
4.7.2 - Light indicators (photo 6) 31
4.7.3 - Starting the charge 31
4.7.4 - Maintenance charge 31
4.7.5 - Charge interruption 31
4.7.6 - Precautions for use 31
4.8 - BATTERY USE AND SERVICING 32
4.8.1 - Starting up 32
4.8.2 - Discharge 32
4.8.3 - Charge 32
4.8.4 - Servicing 32

5 - MAINTENANCE 35

5.1 - GENERAL RECOMMENDATIONS 35
5.2 - MAINTENANCE PLAN 35
5.2.1 - Consumable. 35
5.2.2 - Maintenance plan 36

5.2.3 - OPERATIONS 37

5.3 - OPERATIONS 37

5.3.1 - Hydraulic oil filter 37

5.3.2 - Hydraulic oil tank 37

5.3.3 - Electric batteries 38

6 - OPERATING INCIDENTS 39

6.1 - TROUBLE-SHOOTING 40

7 - HYDRAULIC DIAGRAMS 43

8 - WIRING DIAGRAMS 45

9 - SAFETY SYSTEMS 47

9.1 - MACHINE ELEMENTS 47

9.1.1 - Power supplies and fuses: 47

9.1.2 - Command inputs: 47

9.1.3 - Safety inputs: 47

9.1.4 - Relays: 47

9.1.5 - Electrovalve logic outputs: 47

9.1.6 - Management elements: 48

9.1.7 - LEDs: 48

https://truckmanualshub.com/

1 - GENERAL RECOMMENDATIONS - SAFETY

1.1 - GENERAL WARNING

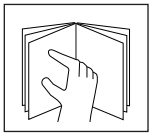

1.1.1 - Manual

This manual is designed to familiarise the operator with HAULOTTE self-propelled platforms in order to ensure efficient and safe use. However, it cannot replace the basic training required by any user of site equipment.

The site manager is bound to inform the operators of the instructions contained in the manual. He is also responsible for applying the «user regulations» in force in the country of use.

Before using the machine, it is essential to understand all these instructions in order to ensure safe and efficient operation.

This manual must be kept available for all operators. Additional copies can be supplied by the manufacturer on request

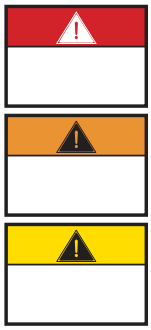

1.1.2 - Labels

Potential dangers and machine instructions are indicated on labels and plates. All instructions on such plates must be read.

All labels conform to the following colour code:

- Red indicates a potentially fatal danger.
- Orange indicates a danger of causing serious injury.
- Yellow indicates a danger that may cause material damage or slight injury.

The site manager must ensure that these labels are in good condition and remain legible. Additional copies can be supplied by the manufacturer on request.

1.1.3 - Safety

Ensure that any persons entrusted with the machine are fit to meet the safety requirements that its use imposes.

Avoid any working method that may jeopardise safety. Any use not compliant with the instructions may cause risk and damage to persons and property.

Caution !

To attract the reader's attention instructions are signalled by this sign.

This manual must be kept by the user throughout the machine's service life, including in the case of loan, lease and resale.

Ensure that all plates or labels relative to safety and hazards are complete and legible.

1.2 - GENERAL SAFETY INSTRUCTIONS

1.2.1 - Operators

Operators must be aged over 18, and hold an operating permit issued by their employer after undergoing a medical check and a practical test that prove they are apt to operate the machine.

Caution !
Only trained operators can use Haulotte self-propelled platforms.

There must always be at least two operators present, so that one can always:

- Take fast action if necessary.
- Take over the controls in case of accident or malfunction.
- Monitor and prevent movement of vehicles and people near the platform.
- Guide the platform operator if required.

1.2.2 - Environment

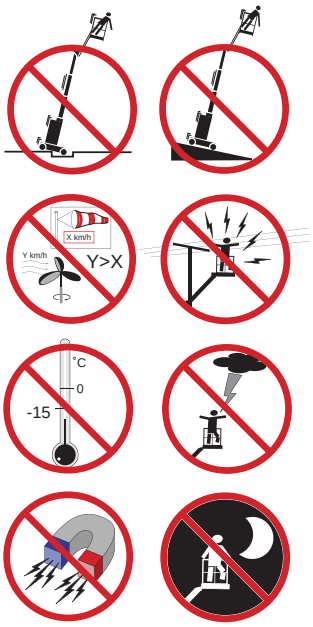

Never use the machine:

- On ground that is soft, unstable, congested.
- On a ground that has a slope greater than permissible limit.
- In winds greater than the permissible limit. If used outside, use an anemometer to ensure that the wind speed does not exceed the permissible limit.
- Near power lines (check minimum safe approach distances according to voltage carried).
- In temperatures less than -15°C (especially in refrigerated chambers). Consult us if it is necessary to work below -15°C.
- In explosive atmospheres.
- In poorly-ventilated areas, since the exhaust fumes are toxic.
- During storms (risk of lightning).
- In the dark, unless the optional floodlight is fitted.
- In the presence of intense electromagnetic fields (radar, moving and high currents).

DRIVING ON PUBLIC ROADS IS PROHIBITED.

1.2.3 - Using the machine

In normal service (i.e. operating from the platform), the platform/turntable control select key must be removed and kept at ground level by a person who is present and trained in rescue/emergency assistance manoeuvres.

Do not use the machine:

- with a load greater than allowed load,
- if wind speed exceeds the maximum
- with more than maximum authorised number of occupants in platform,
- with a side load in the platform greater than permissible limit.

https://truckmanualshub.com/

To reduce the risks of **serious falls, operators must respect the following instructions**:

- Hold the guardrail firmly when lifting or driving the platform.
- Remove any traces of oil or grease from the platform steps, floor or guardrails.
- Wear personal protective equipment suited to working conditions and conform to local regulations, particularly when working in hazardous areas.
- Never disable the limit switches of the safety devices.
- Avoid contact with stationary or moving obstacles.
- Do not increase the platform operating height by means of ladders or other accessories.
- Never use the guardrails to climb into or out of the platform (use the steps provided).
- Never climb on the guardrails when the platform is up.
- Avoid driving the machine at high speed in narrow or congested areas.
- Never use the machine without putting in place the platform safety bar or closing the safety gate.
- Never climb on the covers.

Caution !
Never use the platform as a crane, hoist or lift.
Never use the machine to pull or tow.
Never use the boom as a ram or thruster or to lift the wheels.

To reduce the risks of tipping over, operators **must follow these instructions**:

- Never disable the limit switches of the safety devices.
- Never move the control handles from one direction to the other without stopping in the «O» position. (To stop when travelling, gradually move the handle to «O», keeping your foot down on the pedal.).
- Do not exceed the maximum load or the number of occupants allowed in the platform.
- Spread the load and if possible place in the centre of the platform.
- Check that the ground resists the pressure and load per wheel.
- Avoid contact with stationary or moving obstacles.
- Do not drive the platform at high speed in narrow or congested areas.
- Do not drive the platform in reverse gear (poor visibility).
- Do not use the machine with a congested platform.
- Do not use the machine with equipment or objects hanging from the guardrails or boom.
- Do not use the machine with items liable to increase the wind load (e.g. panels).
- Never carry out maintenance on the machine with the platform raised, without first installing the required safety provisions (overhead crane, crane).
- Perform the daily checks and monitor the machine's good working order during periods of use.
- Preserve the machine from any uncontrolled intervention when it is not in operation.

NOTE : *Do not tow the platform. (It has not been designed for towing and must be transported on a trailer).*

1.3 - RESIDUAL RISKS

1.3.1 - Risks of jerky movements and tipping over

Caution !
The direction of travel can be reversed after a 180° turntable rotation. Take account of the colour of the arrows on the chassis compared with the direction of travel (green = forward, red = reverse)

Risks of jerky movement and tipping over are high in the following situations:

- Sudden action on the controls.
- Overloading of the platform.
- Uneven ground (Be careful during thaw periods in winter).
- Gusts of wind.
- Contact with an obstacle on the ground or at a height.
- Working on platforms, pavements, etc.

Allow sufficient stopping distances:

- 3 meters at high speed,
- 1 meter at low speed.

1.3.2 - Electrical risk

Caution !
If the machine has a 220 V 16A max. plug, the extension must be connected to a mains socket protected by a 30 mA differential circuit breaker.

Electrical risks are high in the following situations:

- Contact with a live line (check safety distances before operation near electricity lines).
- Use during storms.

1.3.3 - Risk of explosion or burning

The risks of explosion or burning are high in the following situations:

- Working in explosive or inflammable atmosphere.
- Filling the fuel tank near naked flames.
- Contact with the hot parts of the motor.
- Use of a machine generating hydraulic leakage.

1.3.4 - Risks of collision

- Risk of crushing people in the machine operation zone (when travelling or manoeuvring equipment).
- The operator must assess the risks above him before using the machine.

1.4 - INSPECTIONS

Comply with the national regulations in force in the country of machine use.

For FRANCE: Order dated 9 June 1993 + circular DRT 93 dated 22 September 1993 which specify:

1.4.1 - Periodic inspections

The machine must be inspected every 6 months in order to detect any defects liable to cause an accident.

These inspections are performed by an organisation or personnel specially designated by the site manager and under his responsibility (whether or not they belong to the company) Articles R 233-5 and R 233-11 of the French Labour Code.

The results of these inspections are recorded in a safety register kept by the site manager and constantly available to the labour inspector and the site safety committee (if one exists) and the list of specially designated personnel (Article R 233-5 of the French Labour Code).

NOTE : This register can be obtained from trade organisations, and in some cases from the OPPBTP or private prevention agencies.

The designated persons must be experienced in risk prevention (Articles R 233-11 or order n° 93-41).

No member of personnel is allowed to perform any check whatsoever during machine operation (Article R 233-11 of the French Labour Code).

1.4.2 - Examination of machine suitability

The manager of the site where the machine is operated must ensure the machine is suitable, i.e. capable of performing the work in complete safety, and in compliance with the operating manual. Furthermore, the French order of 9 June 1993 addresses problems relative to leasing, examination of the state of conservation, checking upon operation after repairs, and test conditions (static test coefficient 1.25; dynamic test coefficient 1.1). All users must consult this order's requirements and comply with them.

1.4.3 - State of conservation

Detect any deterioration liable to cause hazardous situations (concerning safety devices, load limiters, tilt sensor, cylinder leaks, deformation, welds, bolt tightness, hoses, electrical connections, tyre state, excessive mechanical gaps).

NOTE : If the machine is rented/leased, the user responsible for the machine must examine its state of conservation and suitability. He must obtain assurance from the leaser that general periodic inspections and pre-operation inspections have been performed.

1.5 - REPAIRS AND ADJUSTMENTS

These cover major repairs, and work on or adjustments to safety systems or devices (of a mechanical, hydraulic or electrical nature).

These must be performed by personnel from or working for PINGUELY-HAULOTTE who will use only original parts.

Any modification not controlled by PINGUELY-HAULOTTE is unauthorised.

The manufacturer cannot be held responsible if non-original parts are used or if the work specified above is not performed by PINGUELY-HAULOTTE-approved personnel.

1.6 - VERIFICATIONS WHEN RETURNING TO SERVICE

To be performed after:

- extensive disassembly-reassembly operation,
- repair affecting the essential components of the machine,
- any accident caused by the failure of an essential component.

It is necessary to perform a suitability examination, a state of conservation examination, a static test, a dynamic test (see coefficient in paragraph (see Chap 1.4.2, page 5).

Caution !
These test must be performed by a competent person.

https://truckmanualshub.com/

2 - PRESENTATION

Self-propelled platforms, STAR 8 and STAR 10 MAST models, are designed for all elevated work within the limits of their characteristics (Chap. 2.4, page 11) and conform to all the safety recommendations specific to the equipment and places of use.

The main control station is in the plaform.

The turntable control station is a standby or emergency control station.

2.1 - IDENTIFICATION

A plate (Figure: Manufacturer's plate, page 7,), fixed on the right rear of the chassis, bears all the information (engraved) necessary to identify the machine.

REMINDER: When requesting information, intervention or spare parts, please specify the type and serial number.

Fig. 1 - Manufacturer's plate

Pinguely - Haulotte

La Péronnière, BP9, 42152 L'Horme - France

EQUIPMENT		
TYPE		
SERIAL N°		
TOTAL WEIGHT	kg	
YEAR OF MANUFACTURE		
NOMINAL POWER	kW	
GRADEABILITY	%	
	INSIDE USE	*OUTSIDE USE*
MAXIMUM LOAD	kg	kg
NUMBER OF PERSONS + LOAD	P + kg	P + kg
LATERAL FORCE MAX.	N	N
WINDSPEED MAX.	m/s	m/s
SLOPE OPERATION MAX.	degres	degres

7814 621

2.2 - MAIN COMPONENTS

Fig. 2 - Main components

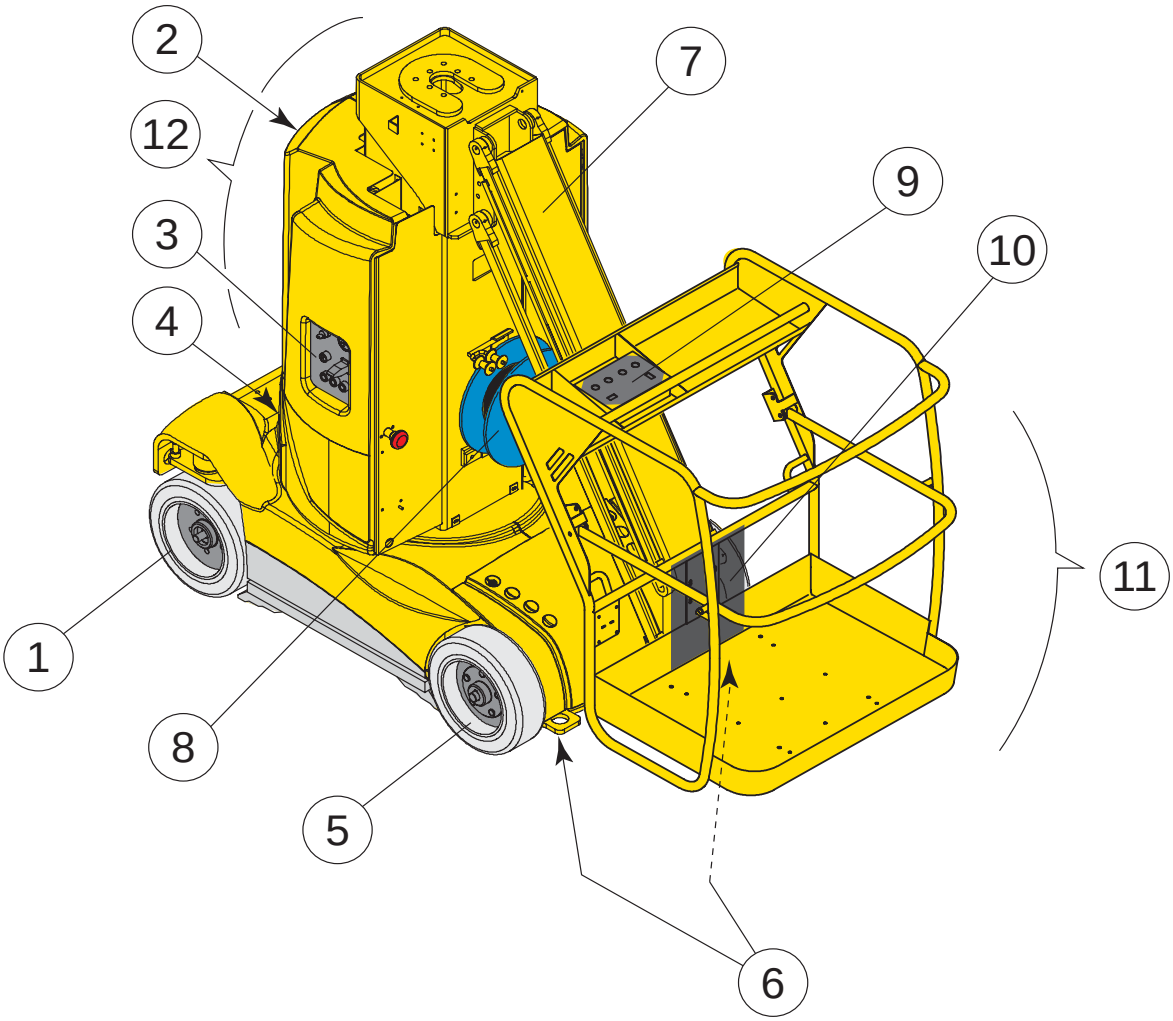

1 - steering wheels	7 - jib
2 - battery box	8 - winder
3 - bottom control panel	9 - top control panel
4 - counterweight	10 - document holder
5 - drive wheels	11 - platform
6 - anchoring lugs	12 - turntable

https://truckmanualshub.com/

2.3 - WORKING AREA

2.3.1 - Working area for the STAR 8 mast

Fig. 3 - STAR 8 working area

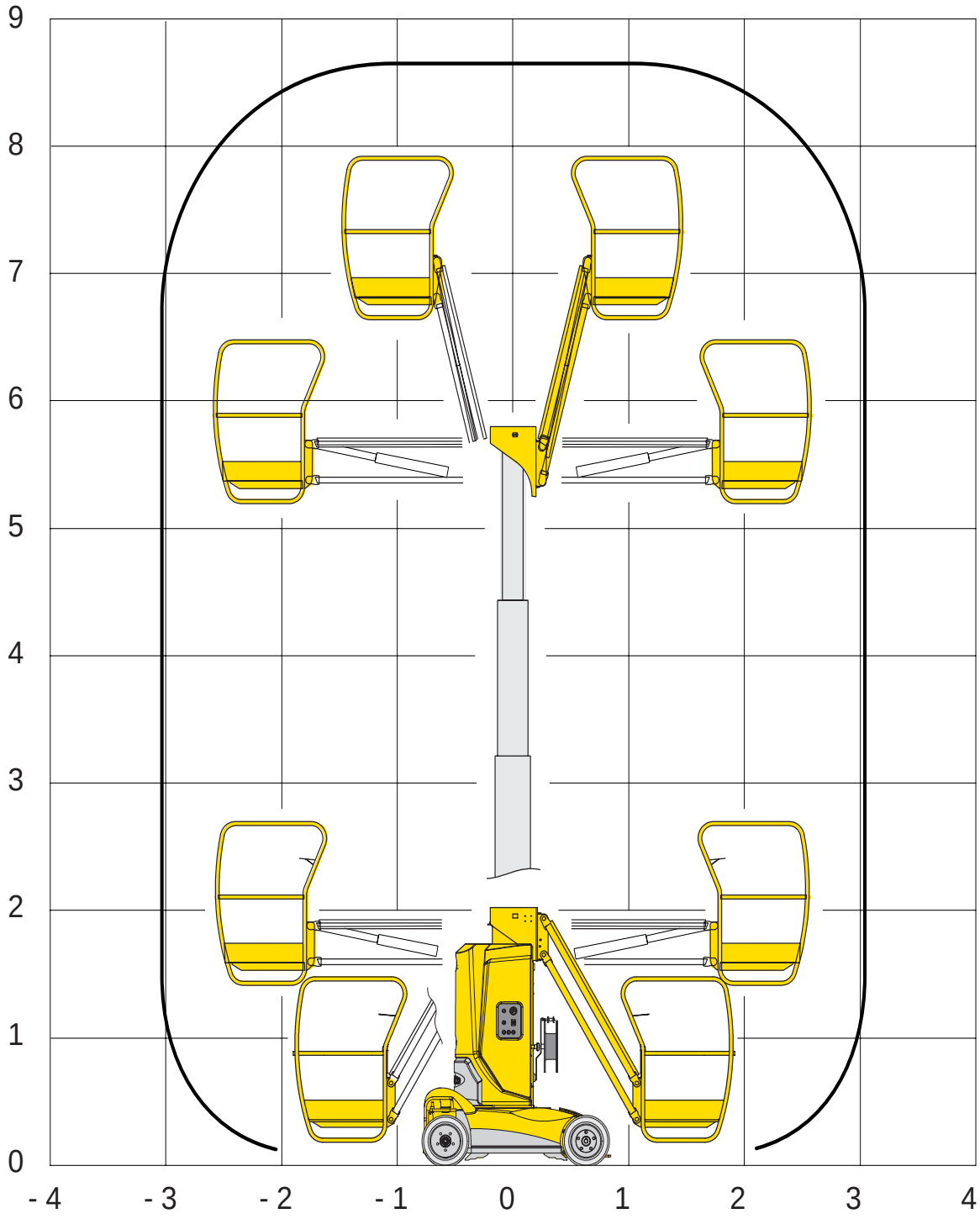

2.3.2 - Working area for the STAR 10 mast

Fig. 4 - STAR10 working area

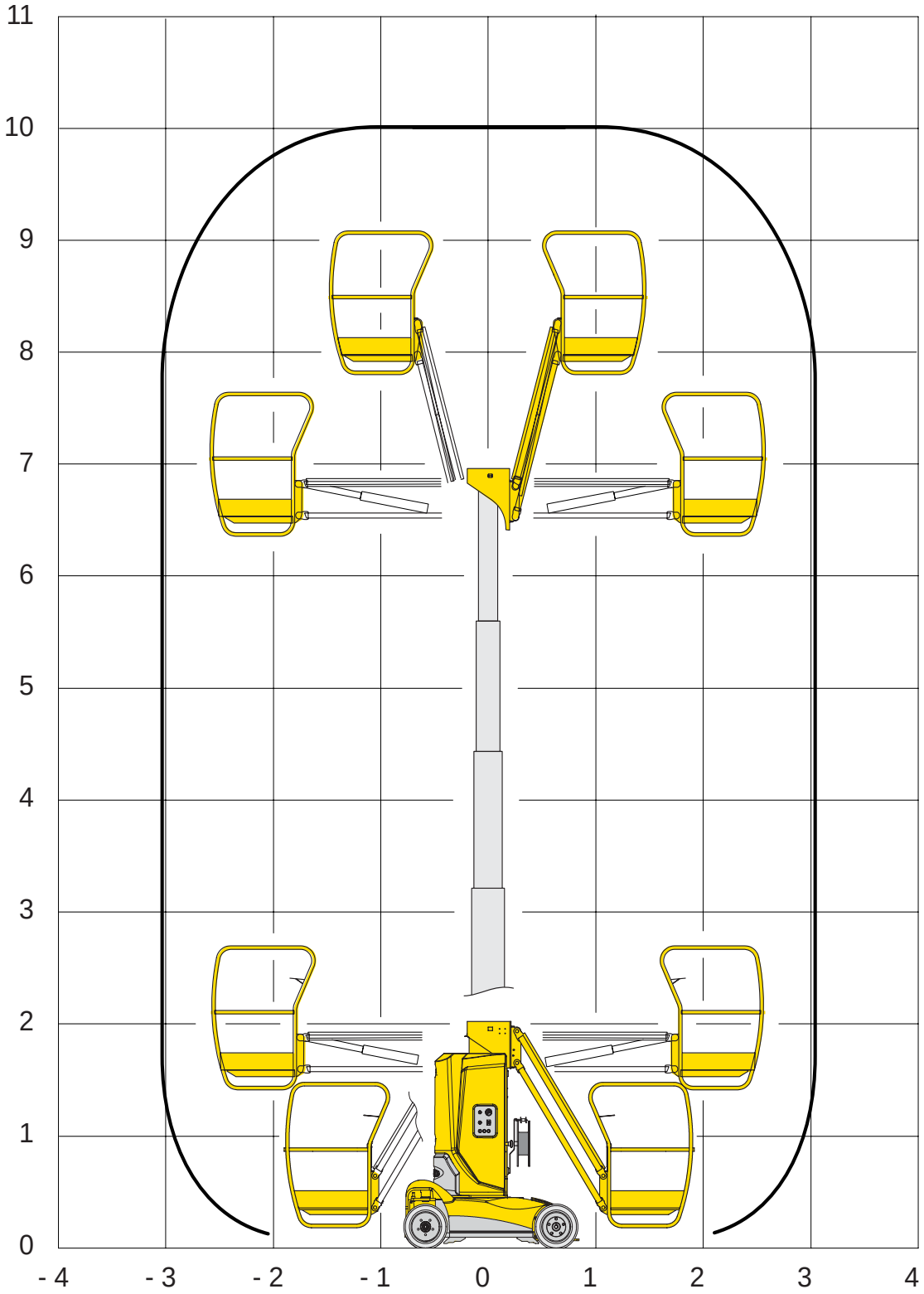

https://truckmanualshub.com/

2.4 - TECHNICAL DATA

2.4.1 - STAR 8 / 10 technical data:

	STAR 8	STAR 10
Useful load (outdoor / indoor)	230 kg -2 people. / 120 kg - 1 pers.	
Maximum side force (outdoor / indoor)	40 kg / 20kg	
Working height	8.73	10 m
Floor height	6.73	8 m
Maximum reach	2.6	2.6 m
Turntable rotation	360° not continuous	
Maximum slope and tilt during operation	3° (approx. 5.2%)	
Platform floor dimensions	670 x 920 mm	
Maximum slope during travel	25%	
Low travel speed	0.7 km/h	
High travel speed	4.5 km/h	
Traction batteries	24V - in 2 trays	
Floor clearance (under pothole device)	100 mm max. - (40 mm)	
Tyres	Solid tyres	
Turning radius: * Internal * External	 440 mm 1875 mm	
Mast telescoping stroke	3700 mm	4900 mm
Max. wind speed in operation (outdoor / indoor)	45 km/h / 0 km/h	
Max. pressure on the ground with load of 230 kg: concrete	13.5 kg/cm²	17.5 kg/cm²
Max. force on one wheel	860 kgs	1050 kg
Movement time with one person: * Turntable orientation (approx. 360°) * Mast telescoping: extend / retract (approx.) * Jib lifting: up / down (approx.)	 60 s 31 s / 33 s 21 s / 29 s	 50 s 50 s / 33 s 20 s / 39 s
Motor * Voltage * Power * Consumption	separate energising 24V 1.2 kW 63A	
Hydraulic pump in operation: volume	1 + 5.5 cm3/rev	
Hydraulic oil tank capacity	25 litres	
Hydraulic operating pressure*: * max steering pressure * max orientation pressure * max mast extension telescoping pressure * max jib lifting pressure	 160 bars 50 bars 45 bars 160 bars	 160 bars 50 bars 45 bars 160 bars
Tightening torque of steering wheel nuts	29 daNm	
Tightening torque of drive wheel nuts	29 daNm	
Tightening torque of slew ring nuts	13.5 daNm	
Weight	2380 kg	2440 kg
Size	(Figure: Dimensions, page 11,)	

- All pressures can be checked by means of a tap.
  - 2 drive wheels with braked reducing gears and electric motors controlled by choppers.
  - Jib movement, lifting, telescoping, orientation: hydraulic electropump and speed control by chopper.
  - Steering by electro-distributing valve.
  -
  -
  -

2.4.2 - Dimensions of the STAR 8 and STAR 10 masts

Fig. 5 - Dimensions

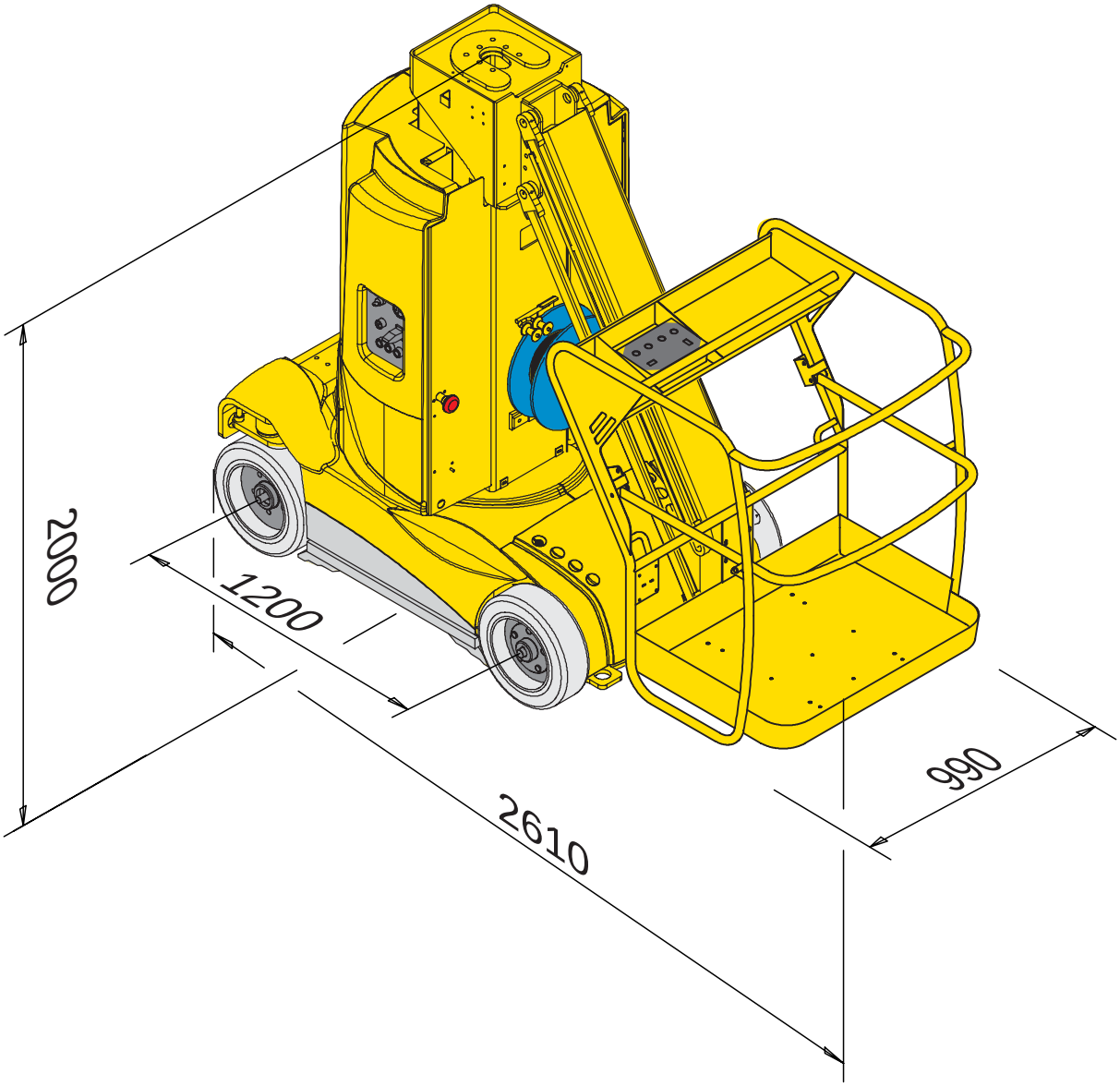

https://truckmanualshub.com/

2.5 - LABELS

2.5.1 - Label positioning

Ref	Code	Qty	Description
8	3078146180 3078146190 3078146200 3078146210 3078146220 3078146230 3078146240 3078146250 3078146260 3078146270	1	Manufacturer's plate (French) Manufacturer's plate (Spanish) Manufacturer's plate (German) Manufacturer's plate (English) Manufacturer's plate (Italian) Manufacturer's plate (Dutch) Manufacturer's plate (Danish) Manufacturer's plate (Finnish) Manufacturer's plate (Portuguese) Manufacturer's plate (Swedish)
7	3078143420 3078143430 3078143440 3078143450 3078143460 3078143470 3078144940 3078143540 3078145830 3078145940	1	Operating instructions (French) Operating instructions (Spanish) Operating instructions (German) Operating instructions (English) Operating instructions (Italian) Operating instructions (Dutch) Operating instructions (Danish) Operating instructions (Finnish) Operating instructions (Portuguese) Operating instructions (Swedish)
26	3078144460	1	The machine must not be used during charging
16	3078143610	1	Protective clothing must be worn
17	3078143640	2	Do not stand on the cover
57	3078148910	1	"Emergency lowering" label
58	3078143830	4	"Fork lift truck position" label
35	3078144480	1	"240V charger connection" label
59	3078144440	2	Vertical "Body crush risk" label
10	3078144470	1	Machine not insulated
5	3078148870	2	Floor height and load
15	3078143510	1	Battery check plate
11	3078143520	1	"Hydraulic oil" label
14	3078143620	2	Hand crush risk
44	3078143630	2	Body crush risk
21	3078143680b	1	Read CE Operating Instruction manual
19	3078143600	1	Caution, do not use as a welding earth
20	3078143540a	1	The plug must be connected
9	3078144240	1	Do not park in the working area
63	3078148800	1	ON / OFF
13	3078143590	1	Hydraulic oil high and low
13	3078148890	1	Organic oil option label
12	3078148790	1	Travel direction danger
2	3078148470	3	STAR 10 logo
2	3078148780	3	STAR 8 logo
50	3078148770	2	"HAULOTTE" logo
49	3078148830	1	Red arrow
48	3078148820	1	Green arrow
46	3078148810	1	"Emergency movement" label
23	3078148300	1	Turntable control panel
24	3078148280	1	Platform control panel
30	2420505950	1	Activation guaranteed
29	3078145730a	1	240V plug for Holland only

Ref	Code	Qty	Description
33	3078144490 a	4	Sling load for Australia only
35	3078144390a	2	Charger connection label for Australia only
70	3078145200	1	Pressurised fluid for Australia only
53	3078144520	1	Harness must be worn for Australia only
32	3078144360	1	Do not go down slopes at HS for Australia only

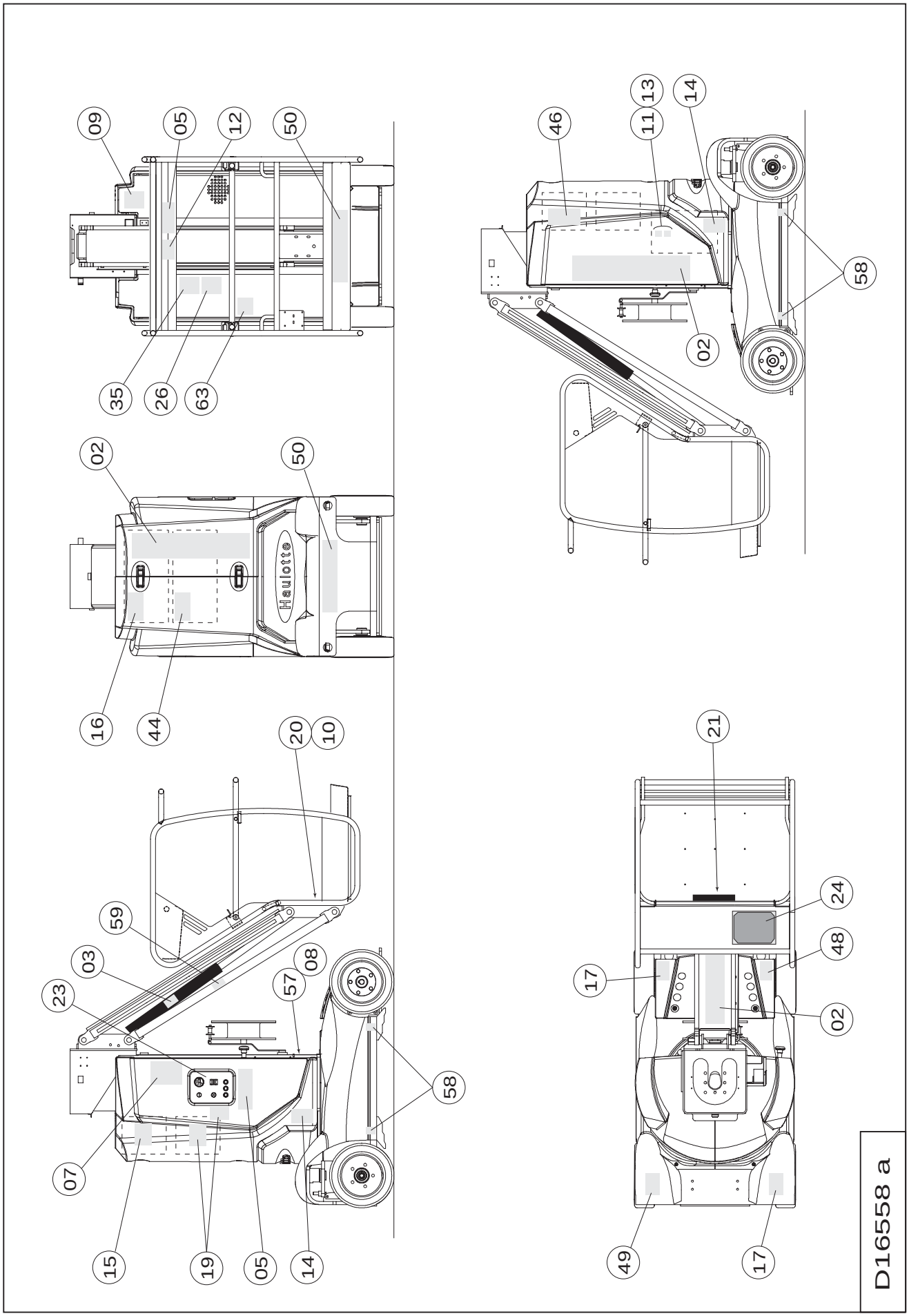
09
05
12
50
35
26
63
46
11
13
14
58
02
02
50
Haulotte
16
44
20
10
21
59
03
23
08
57
24
48
17
02
58
07
15
19
05
14
49
17
D16558 a

2.5.2 - Yellow labels:

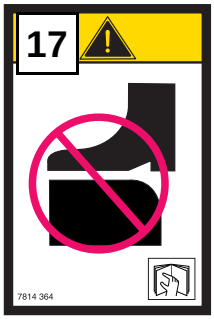

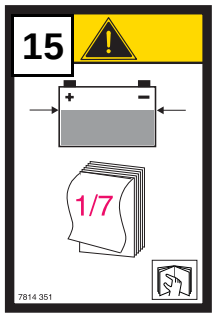

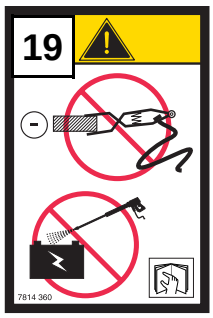

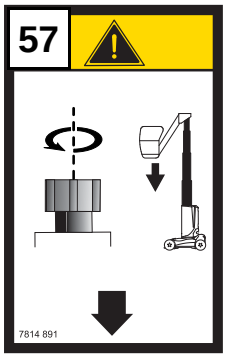

2.5.3 - Red labels:

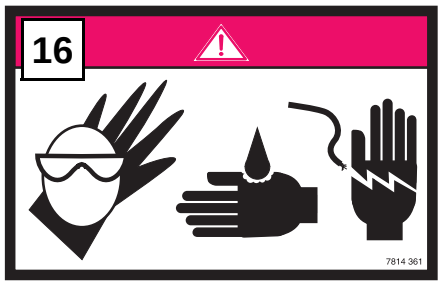

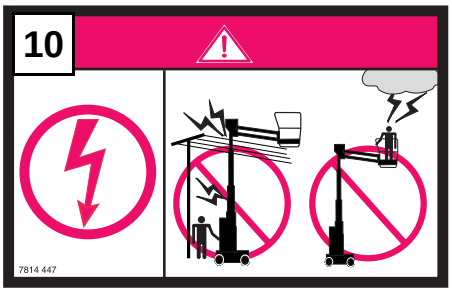

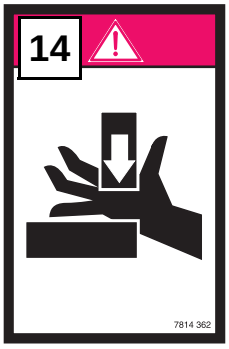

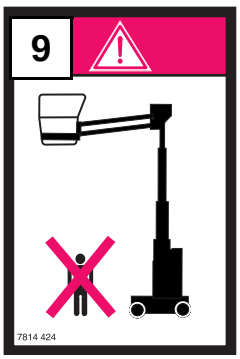

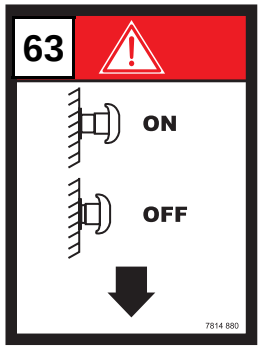

2.5.4 - Miscellaneous labels:

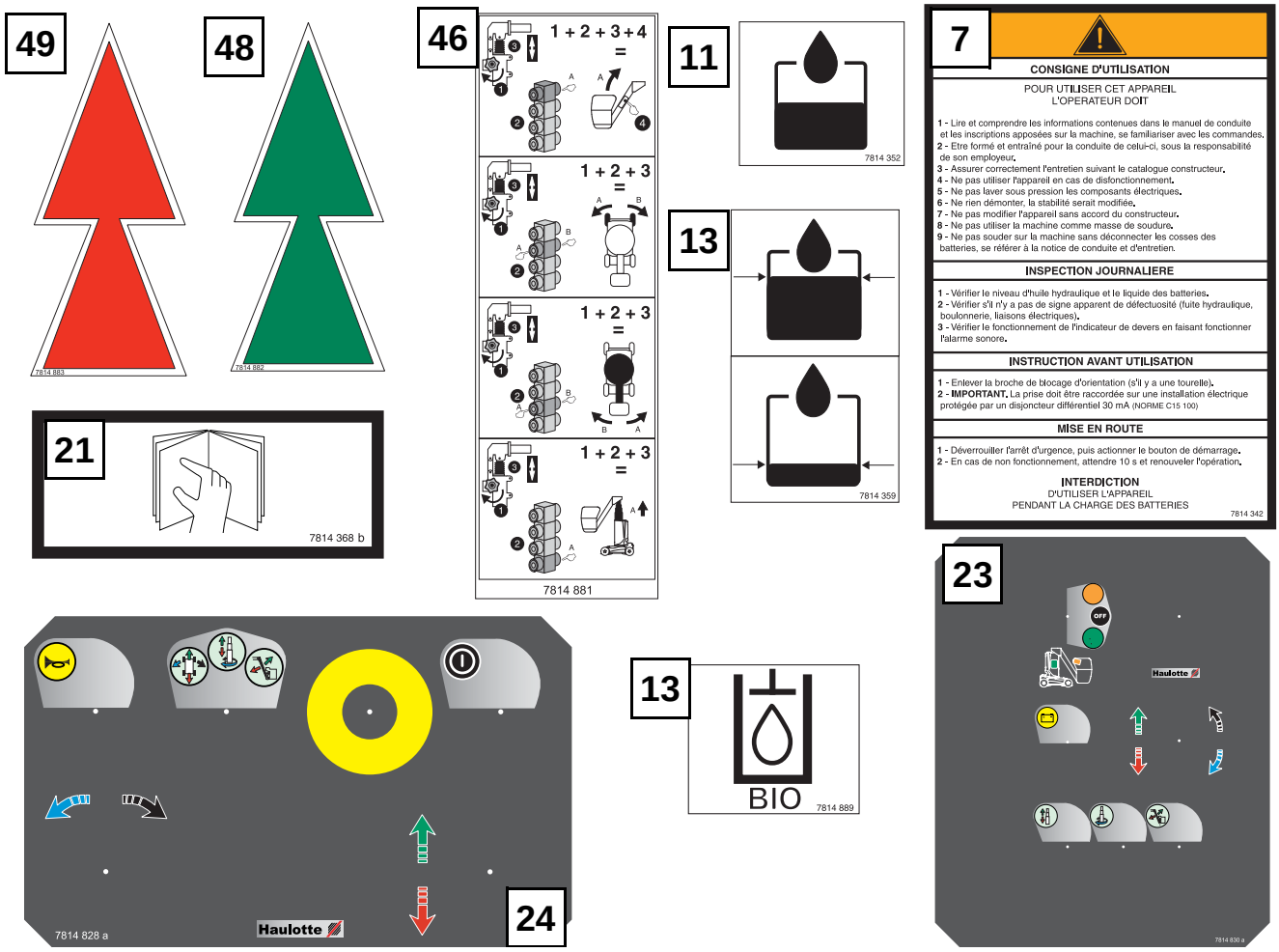

2.5.5 - Specific labels for Holland:

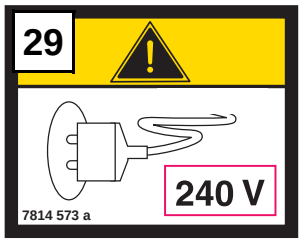

2.5.6 - Specific labels for Australia:

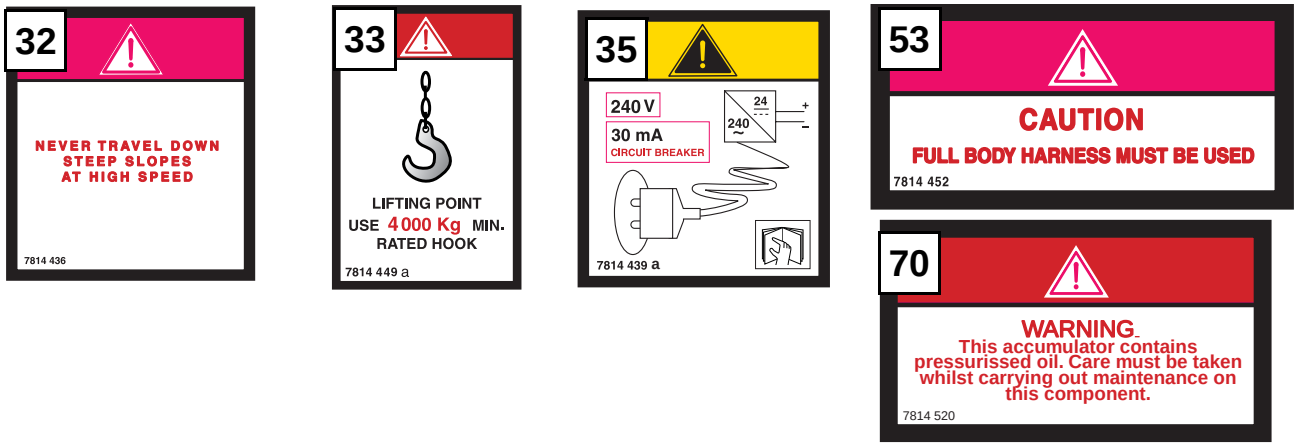

https://truckmanualshub.com/

https://truckmanualshub.com/

3 - OPERATING PRINCIPLE

3.1 - HYDRAULIC CIRCUIT

All machine movements, apart from travel, are powered by the hydraulic energy supplied by an electropump whose operating speed is controlled by an electronic chopper.

A pressure filter fitted on the pump output protects the installation from contamination.

3.1.1 - Turntable orientation, mast telescoping, jib lifting movements

are accomplished using the electro-distributing valves directing the hydraulic output from the pump to the receiver device for the movement selected.

Movement progression and speed are obtained by varying the regime and therefore output of the electropump regime, which is controlled by the electronic speed chopper according to an electric order. Only one movement can be made at a time.

3.1.2 - Steering movement

This is controlled by a 4-channel electrovalve.

On/off output from the same electropump.

3.1.3 - Mast telescoping and jib lifting cylinders

These are equipped with water-tight electrovalves covered on the body.

Caution!

IT IS FORBIDDEN TO REMOVE THE LEAD OR ADJUST THE MACHINE's PRESSURE LIMITERS.

3.1.4 - Turntable rotation

This is achieved by a "wheel and pinion" ring and reducer assembly, drive by a hydraulic motor. Operating pressure is limited to 50 bar for this movement.

3.1.5 - Manual emergency movement

(Photo 1 : Manual emergency movement, page 20)

If a failure disabling mast lowering (A) and jib movement (B) occurs, these movements can be made by manually activating the electro-distributing valve corresponding to the movement required.

Photo 1: Manual emergency movement

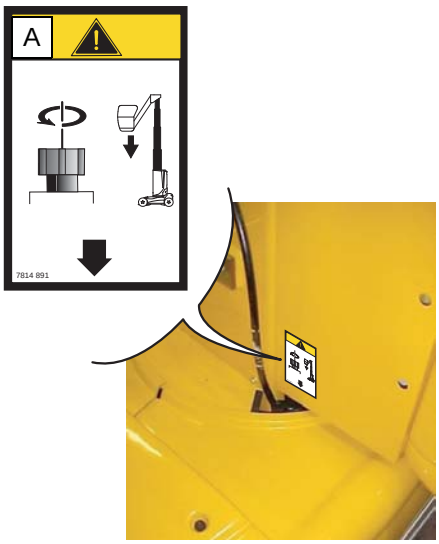

3.2 - ELECTRIC CIRCUIT

The electric power used to drive the motors and supply the controls is supplied by a set of two 24 V - 250 Ah traction battery units. A built-in charger enables these batteries to be recharged overnight by connecting it to a domestic 16A socket.

The electric circuit is in two separate parts:

- a 24V power circuit, to operate the travel motors and the electropump,
- a 24V control circuit, for all chopper operation, control and safety system power supply.

3.2.1 - Electronic speed chopper

This device is central to platform operation. Its role is to control movement and travel speed by adapting the rotation regime of the various electric motors to a given command.

The chopper receives the signal from the control manipulator, as well as information on the type of movement to be made and state of the safety systems.

All electric motors are controlled by the chopper and therefore depend on its internal operating safety systems.

3.2.2 - Contactor plate

The chopper is assembled on a support plate, with a series of selector switches. These are power relays intended to supply the motors according to the operator's choices.

3.2.3 - Direct electric travel

Two direct current motors, connected in series, power the drive wheels via epicycloidal reducing gears.

A generator, or tachometer, is installed on one of the motors and returns the actual speed of the motor to the chopper to ensure regulation of the rotation regime. This system prevents acceleration due to runaway and triggers counteractive braking if necessary.

3.2.4 - Tilt control up to 3°

The tilt detector emits an audible signal when the maximum allowed tilt is reached.

If the situation continues, after a time delay of 1 or 2 seconds, the mast extension telescoping and jib lifting movements are disabled, and as long as the machine is extended, travel is also disabled.

To restore the travel movement, all elevation elements must first be retracted.

NB: Even when the machine is folded, the tilt detector emits an audible signal as long as the slope is greater than 3°, letting the operator know that the platform cannot be extended.

3.2.5 - High travel speed

High travel speed is only authorised while the platform is in the low position.

While the mast is extended, or if on STAR 10 type machines, the jib goes beyond the horizontal, only low speed is possible.

https://truckmanualshub.com/

Caution!
DO NOT GO DOWN STEEP SLOPES AT HIGH SPEED

3.2.6 - Wheel motor brake release

For each travel movement control, there is an electric supply for the brakes.

When towing the machine, it is possible to force wheel motor brake release. (See chap.:4.5.3 -“Wheel brake release”, page 30.)

https://truckmanualshub.com/

4 - USE

4.1 - SAFETY SYSTEMS

If an attempt is made to use the machine beyond its capabilities, safety systems are installed to protect personnel and the machine and avoid all risk of accidents.

These systems immobilise the machine or disable movements.

It is important to be familiar with the the machine's characteristics and operation, or you may believe a failure has occurred when in fact, it is merely a safety system coming into operation.

It is therefore essential to read and understand all the instructions in the following chapters.

Caution!
The main operating station is in the platform. The "turntable" station is an emergency or standby station.

4.1.1 - Movement (control from the "paltform" station)

To enable the machine to be moved to access the place of work, unload or load on slopes of less than 25%, you must ensure that:

- the mast is fully retracted.
- the jib is lowered.

Otherwise, the tilt detector will cause the machine to be immobilised.

When the machine is elevated, it is forbidden to exceed the machine's nominal load (See chap.:2.4 -"technical data", page 11.)

Caution!
High travel speed is only possible if the mast is fully retracted and the jib is lowered. Breaking contacts switch automatically to low speed in the case of extension.

4.1.2 - Battery discharge

If the battery is more than 80% discharged:

- telescope and jib raising is impossible
- rotation is neutralised.

4.2 - UNLOADING - LOADING - MOVING

IMPORTANT: Before any movement, check the machine's overall condition to make sure that it has not been damaged during transport. If damage has occurred, make reserves in writing to the transport company.

Caution!
Incorrect movement may cause the machine to fall, resulting in serious bodily injury and material damage

Unload on a stable surface that is sufficiently resistant (see pressure on the ground - Chap. 2.4, page 11), flat and clear of any obstables.

4.2.1 - Unloading by lifting

- Use a yoke plate and 4 slings.
- Precautions:

Ensure that:

- the lifting accessories are in good working order and of sufficient capacity.
- the slinging accessories can bear the load and are not abnormally worn.
- the slinging lugs are clean and in good condition.

- the personnel controlling movement is authorised to use lifting equipment.

- Unloading:
  - attach the 4 slings to the 4 slinging lugs.
  - slowly lift, making sure that the load is evenly distributed and slowly set the machine down.

4.2.2 - Unloading by trunk

- Unloading using a fork-lift truck.
- Precautions:

Ensure that:
  - the truck's forks have the best possible hold.
  - the machine is set down in a stable manner.

- Unloading:
  - lift slowly, making sure that the load is evenly distributed and slowly set the machine down.

Fig. 6 - Unloading

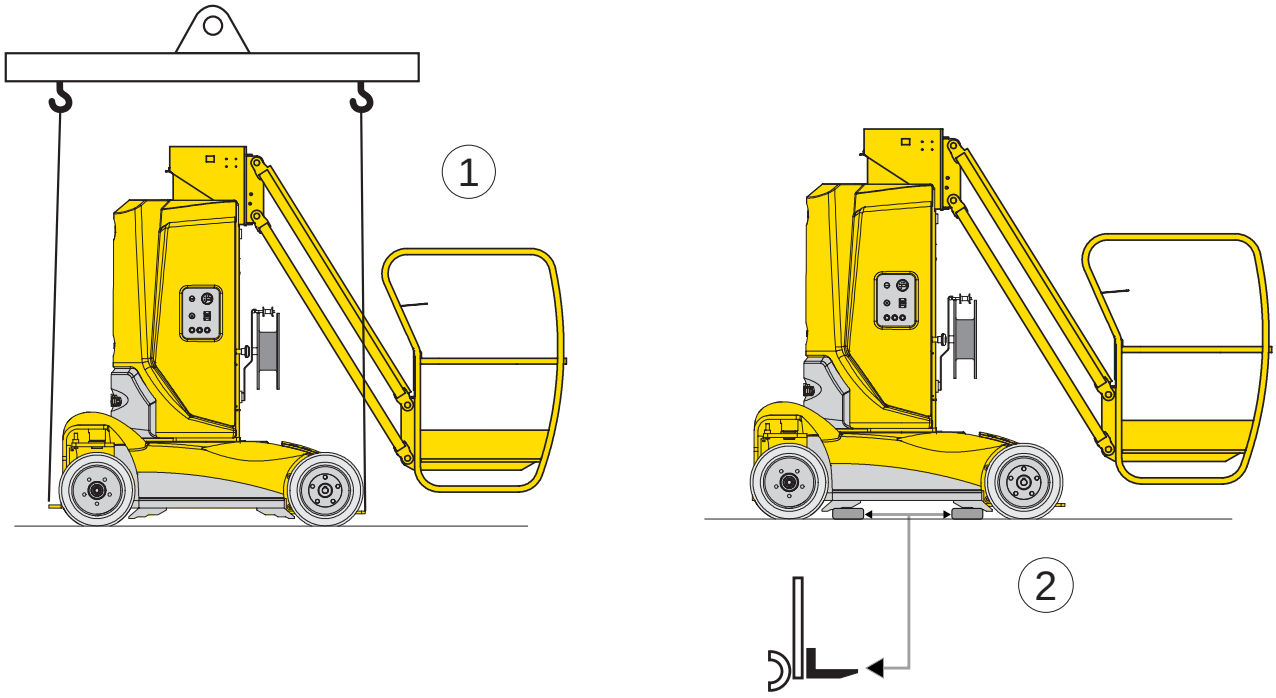

Caution!
Never stand under or too close to the machine during movement.

4.2.3 - Unloading with ramps

- Precautions:
  - ensure that the ramps can bear the load and that adhesion is sufficient to avoid all risk of slipping during movement and that the ramps are properly fixed.

IMPORTANT: This method requires the machine to be started, see (Chap. 4.3, page 26) to avoid all risk of incorrect movement. Select the low travel speed.

NB: The slope of the ramp is almost always greater than the maximum working slope (3°), therefore the mast and jib must be lowered to enable the travel movement. In this case, the buzzer sounds but travel is still possible.

If the slope is greater than the maximum slope allowed in travel (Chap. 2.4, page 11): use a hoist in addition to traction means.

https://truckmanualshub.com/

Caution!
DO NOT GO DOWN THE RAMPS AT HIGH SPEED.

4.2.4 - Loading

The precautions are the same as for unloading.

The machine should be wedged according to the diagram below.

To climb the ramps of a lorry, select high speed.

Fig. 7 - Loading

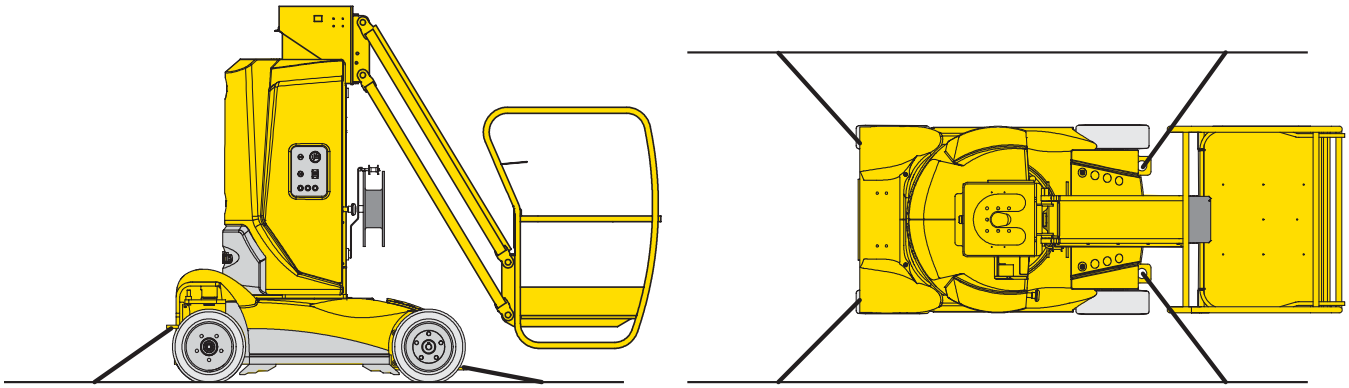

4.2.5 - Moving

- Take care to comply with traffic regulations or recommendations in areas of movement.
- On rough ground, reconnoitre the route before starting elevation work.
- Always drive sufficiently far from unstable edges or mounds.
- Ensure that there is no-one in the immediate proximity of the machine before moving the machine.

REMINDER: It is forbidden to drive on public highways.

4.3 - OPERATIONS BEFORE THE FIRST OPERATION

REMINDER: Before operation, familiarise yourself with the machine and check it, by reading this manual, the instructions marked on the various plates and consult the maintenance plan (see line: "before each operation").

4.3.1 - "Turntable" control station

Photo 2: "Turntable" control station

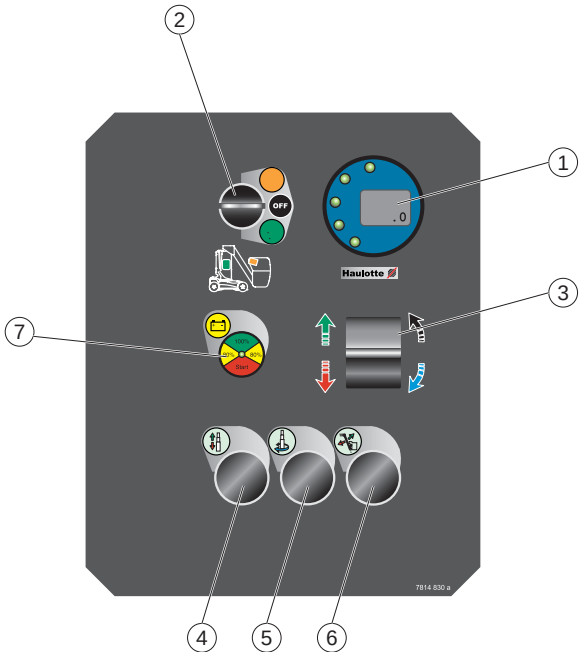

1 - Timer with charge level	5 - Turntable orientation control
2 - Control panel selection switch: turntable / platform	6 - Jib raising control
3 - Movement control manipulator	7 - Charge indicator
4 - Mast telescoping control	

4.3.2 - "Platform" control station

Photo 3: Platform control panel

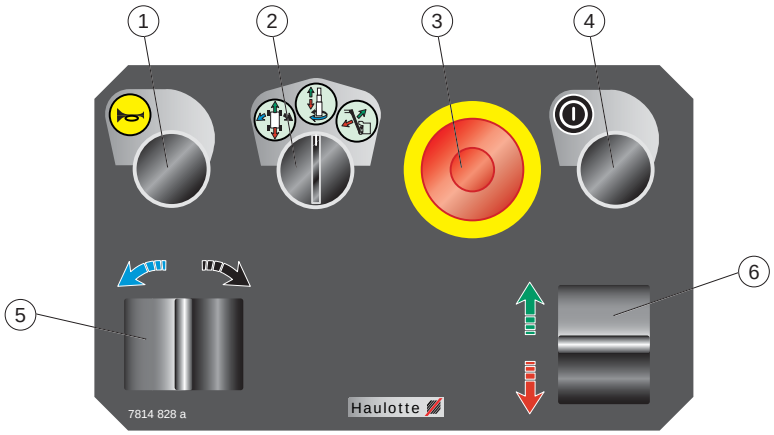

1 - Horn	4 - Control unlocking
2 - Travel / movement selector switch	5 - Movement control: left / right
3 - Emergency stop	6 - Movement control: For/back; Up/down

https://truckmanualshub.com/

Caution!
DURING HIGH PRESSURE CLEANING, DO NOT DIRECT THE JET DIRECTLY ONTO THE ELECTRIC BOXES AND CUBICLES

4.3.3 - Checks before operation

- Ensure that the machine is on flat, stable ground that can bear the weight of the machine (pressure on the ground, Chap. 2.4, page 11)

NB: see WORKING AREA diagram (Chap. 2.3, page 9)

- Ensure that there are no obstacles that may interfere with the following movements:
  - travel (moving the machine)
  - turntable orientation
  - mast telescoping and jib lifting: see WORKING AREA diagram (Chap. 2.3, page 9)
- Visually inspect the whole machine: pay particular attention to paint chips or battery acid leakage.
- Check that there are no loose bolts, nuts, connections or hoses, no oil leaks, no cut or disconnected electric conductors.
- Check the mast, jib and platform: no visible damage, no indication or wear or deformation.
- Check that there are no leaks, indication of wear, impact marks, scratches, rust or foreign matter on the cylinder rods.
- Pump and hydraulic station: no leaks, components tight.
- Check that the reducers are not disconnected.
- Check that the wheel nuts are tight and tyres are not worn.
- Check that the battery terminals are clean and tight: loose or corroded terminals may cause a loss of power.

REMINDER: Respect safety instructions given by the battery manufacturer

- Circuit breakers on the turntable control panel should be pushed in.
- Check that the platform control panel supply cable is in good condition.
- Check that the emergency stops work properly.

Caution!
These machines are not insulated and must not be used near electric lines.

- Check:
  - Hydraulic oil level (ref.1 photo 4), top up if necessary via the cap (ref.2 photo 4).
  - Electric battery level. The level should be approx. 10 mm above the plates. Top up if necessary with distilled water (Chap. 4.8, page 32).

Caution!
TO FILL UP, ONLY USE THE PRODUCTS RECOMMENDED IN THE CONSUMABLES CHAPTER

- Check that the tilt detector (photo 5) works properly by tilting the support plate. Beyond 3°, it should emit a sound and disable dangerous movements.

Photo 4:

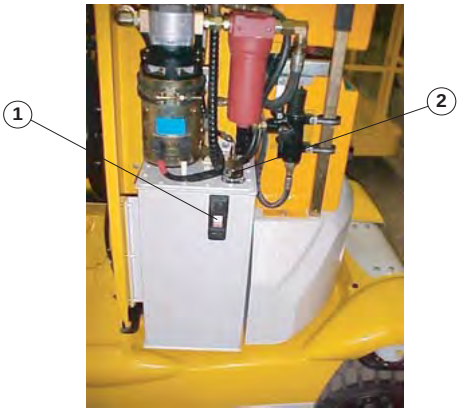

Photo 5:

4.4 - BEFORE EACH USE

IMPORTANT: do not start operation before completing all the checks described in the previous chapter.

To familiarise yourself with the machine, the first movements should be made on the ground with the machine in the transport position: mast retracted, and for STAR 10 type machines, jib lowered.

REMINDER: The main control panel is in the platform.

In normal operation, the "turntable" operation station is a standby or emergency station only used if necessary.

The platform/turntable selector key must be removed and kept on the ground by a person present and trained in emergency/rescue operations.

Photo 6: Emergency stop

4.4.1 - Switching power on

- Set the emergency stop button (Photo 6 : Emergency stop)
- Select the turntable control station with the key Ref.2 (Figure: "Turntable" control station, page 26,) turned to the turntable position (bottom picture). In this position, travel controls from the "platform" control panel are cancelled.

4.4.1.1 -Movement tests

REMINDER: Ensure that there are no obstacles that may interfere with movements before starting operation.

- Movements controlled from the "turntable" station are "on/off" controls without progression of movement.
- Test turntable rotation movements in both directions (switch ref.4) and telescope in/out (switch ref.3) then lower the mast fully.

4.4.1.2 -Switching to the "platform" control

- Put the key selector (ref: 2) (Figure: : "Turntable" control station, page 26,) in the "platform" position (top).
- Check that the tilt detector works properly (photo 5:page 28).

4.4.2 - Operations from the platform.

- Climb into the basket, respecting maximum load recommendations and distributing load evenly, if necessary, all over the floor.

https://truckmanualshub.com/

PLATFORM MODEL STAR 8; STAR 10: 230 kg. - 2 people (indoor); 120 kg. - 1 pers. (outdoor).

4.4.3 - Testing the platform control station

- Ensure that the emergency stop button (ref.2) is armed.
- If a movement does not respond to its command, press the emergency stop button and reset.
- Test the turntable orientation, mast telescoping, jib lifting and steering movements by placing the selector (ref.1) in the relevant position (pictograms) and activating the manipulator:
  - forward and back for turntable orientation, mast telescoping and jib lifting movements.
  - right and left for steering movements.
- Place the selector switch in the travel position (the same as steering) and move the manipulator from right to left to obtain the steering movement. This function works in an "on/off" manner with no gradual movement.
- Test travel by moving the manipulator forwards or backwards.

REMINDER: High speed is only possible if the machine is folded. Even slightly extended only low speed is possible.

Work may now begin.

4.5 - STANDBY AND EMERGENCY OPERATIONS:

4.5.1 - Standby or emergency procedure

If an emergency movement is necessary, the safety systems are disabled. Only a skilled operator may perform such movements.

Photo 7: Manual pump

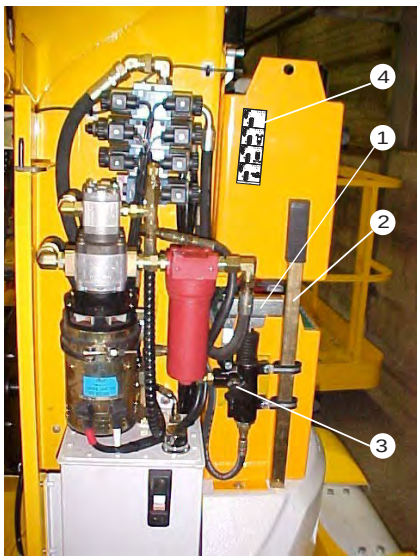

4.5.2 - Manual pump emergency operation.

Movements may be controlled from the ground if the main power source fails.

There is a hand pump (ref.1) next to the hydraulic distirbuting valves on the turntable.

In association with manual control of the electrodistributing valves, this pump enables mast lifting, turntable orientation, jib lifting and steering orientation (if the machine is towed).

- Insert the lever (ref.2) into the pump.
- Check that the pump's decompression valve (ref.3) is closed.
- Move the lever up and down, keeping the manual control corresponding to the required movement's electrodistributing valve pressed down.
- Follow the instructions on the label near the distributing valve (ref.4).

REMINDER: Mast and jib lowering movements are obtained by acting on the electrovalves corresponding to these movements. (See chap.:3.1.5 -"Manual emergency movement", page 19.)

Photo 8: Wheel brake release

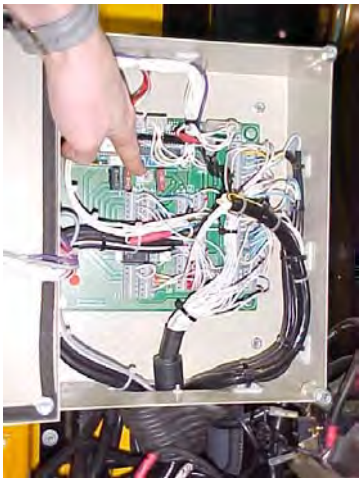

4.5.3 - Wheel brake release

If the machine is towed, the drive wheels can be braked using the switch in the turntable electric box (Photo 8 : Wheel brake release). This requires machine power to be switched off by activating the emergency stop and free of load.

4.5.4 - Emergency operation

If the machine is in normal operation but the operator in the platform is unable to lower the platform to the ground, an operator on the ground can do so:

- Switch to the "turntable" position (Chap. 4.1.1, page 23).
- Control the required movements

4.6 - BATTERY CHARGE STATE CHECK / TIMER

The following functions are performed by a single device (Photo 2 : "Turntable" control station, page 26):

- BATTERY CHARGE STATE:

The state of charge of the battery supplied by the timer is indicated by a series of 5 LEDs, 4 of which are green and one red. When the battery is charged, the first four LEDs are lit, and as the battery becomes discharged, they go out one after the other, in proportion to the remaining charge of the battery until the residual charge value is reached, lighting the red LED to indicate that the battery is dicharged. The breaking threshold is then reached and lifting movements are interrupted. Batteries must then be recharged.

- TIMER:

Hours are counted while the electropump unit is in operation. During this time, the "hour-glass" flashes.

- RESETTING

The timer is reset when the battery is properly recharged.

A fuse protects the controller.

4.7 - USING THE BUILT-IN CHARGER

CHARIS HF 24V - 30A STD type.

Caution!
DO NOT USE THE PLATFORM DURING RECHARING

4.7.1 - Characteristics

- Power supply: 220V single phase 50 Hz
- Voltage supplied: 24 V
- Charging time for 250 Ah battery: approximately 15 hours for batteries discharged by 80%.
- Charge curve entirely controlled by micro-controller.
- Protection against battery polaity inversion by 2 output fuses, of the 30 A car type.
- Mains connection: 10/16A plug - 2 poles + earth

https://truckmanualshub.com/

4.7.2 - Light indicators (photo 6)

Photo 9: Light indicator

The charger is equipped with a light indicator (led) (ref. 1);

See table below:

State	Description
RED on	Machine charging
YELLON on	50% charged
GREEN on	Machine charging complete

4.7.3 - Starting the charge

Charging is started automatically when connected to the mains.

Charge time for a battery discharged by 80%: 15 hours

4.7.4 - Maintenance charge

If the charger remains connected to the mains for more than 48 hours, it starts a new charge cycle 48 hours after termination of the previous charge to compensate for self-discharge.

4.7.5 - Charge interruption

If it is necessary to move the machine during a charge cycle, the charger must be disconnected.

After moving the machine, reconnect the charger. If the interruption is longer than 13 minutes, a full charge cycle is initialised.

4.7.6 - Precautions for use

- Avoid recharging the batteries if the electrolyte temperature is above 40°C. Leave to cool.
- Keep the top of the batteries dry and clean. Incorrect connection or corrosion may cause a major loss of power.
- If installing new batteries, recharge after 3 or 4 hours' operation, and repeat the recharge 3-5 times.
- The charger has been configured in the plant with the cable provided (ref. 9.photo 1).

If the cable is replaced, ensure that a cable of the same section and length is used.

Do not attempt to intervene on the charger during the guarantee period (1 year), but contact the HAULOTTE PINGUELY After-sales service.

4.8 - BATTERY USE AND SERVICING

The batteries are the power source for your platform.

Here is some advice to enable you to use them to their capacity, without risk of premature damage.

Caution!
It is absolutely forbidden to change the type of battery. The weight of the battery contributes to machine stability (total weight: 240 kg).

4.8.1 - Starting up

- Check that the electrolyte level is sufficient.
- Do not overuse the batteries during the first few cycles. Take care not to discharge by more than 70% of nominal capacity (first red bar on the controller flashing).
- The batteries give full capacity after approximately ten working cycles. Do not add electrolyte before these ten cycles have been completed.

4.8.2 - Discharge

- Never discharge the batteries to more than 80% of their capacity in 3 hours (2 flashing red bars on the the charge state controller).
- Ensure that the controller is in full working order.
- Never leave the batteries discharged.
- In cold weather, do not postpone recharging as the electrolyte may freeze.

4.8.3 - Charge

- When to recharge?
  - when the batteries are discharged between 35 and 80% of their nominal capacity
  - after a long period of inactivity.
- How to recharge?
  - ensure that the mains supply is suited to charger consumption
  - fill to the minimum level of electrolyte if the level of one of the elements is below this minimum.
  - work in a clean, ventilated area with no naked flames nearby
  - open the box covers
  - use the machine's built-in charger. Its charge output is suited to the battery capacity.
- During charging
  - do not remove or open the element caps
  - ensure that the element temperature does not exceed 45°C (take care in summer or in a room with a high ambient temperature).
- After charging
  - top up with electrolyte if necessary.

4.8.4 - Servicing

- Check the levels of electrolyte before charging once a week in normal use
- If necessary, top up
  - with distilled or demineralised water
  - after charging
- Never add acid (in the event of spillage, contact the After-sales service).
- Never leave discharged batteries inactive
- Avoid overflow
- Clean the batteries to avoid salt formation or current deviations.
- Wash the top without removing the caps
- Dry with compressed air, using clean cloths.
- Lubrciate the terminals.

https://truckmanualshub.com/

- Take safety precautions when servicing the batteries (wear protective gloves and goggles).

To make a rapid diagnosis of the condition of your batteries, once a month, note the density of each element, using a hydrometer, and the graphs below according to the temperature (do not measure directly after filling).

STATE OF BATTERY CHARGE ACCORDING TO DENSITY AND TEMPERATURE

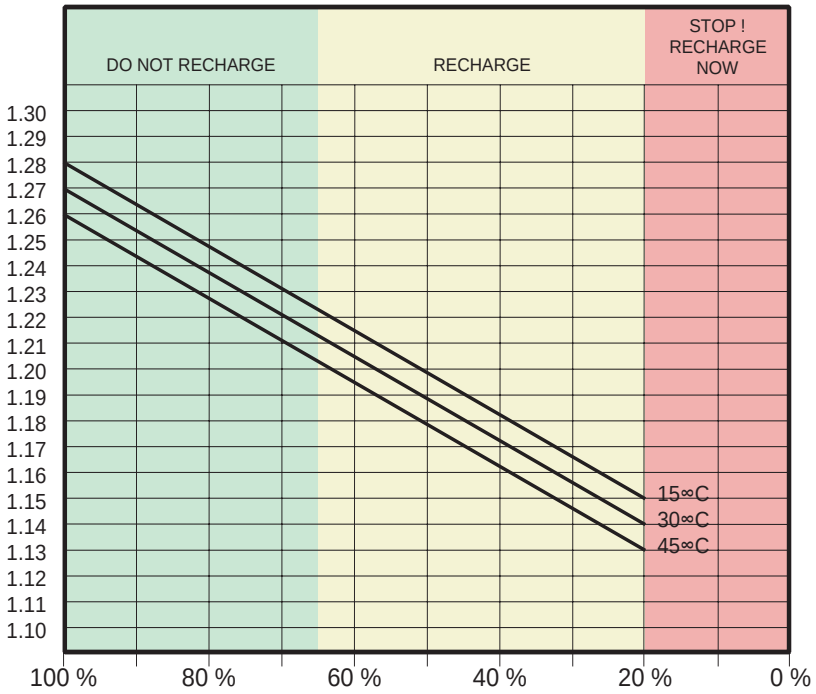

Caution!

DO NOT ELECTRIC ARC WELD ON THE MACHINE BEFORE FIRST DISCONNECTING THE BATTERIES.

IMPORTANT: NEVER TRY TO USE THE BATTERIES TO START ANOTHER MACHINE

https://truckmanualshub.com/

5 - MAINTENANCE

5.1 - GENERAL RECOMMENDATIONS

The servicing operations indicated in this manual are given for normal operating conditions.

In difficult conditions: extreme temperature, high hygrometry, polluted atmosphere, high altitude, etc. certain operations must be performed more often and specific precautions should be taken: contact HAULOTTE PINGUELY After-sales service for information.

Only authorised and skilled personnel may intervene on the machine and must respect the safety instructions concerning protection of personnel and the environment.

Check safety system operation regularly.

Caution!
Do not use the machine as a welding earth-
Do not weld without disconnecting the (+) and (-) battery terminals-
Do not start other vehicles with the batteries connected.

5.2 - MAINTENANCE PLAN

The plan on the following page gives the frequency, servicing operations (device) and consumables to be used.

- The reference in the symbol indicates the servicing point according to frequency.
- The symbole represents the consumable to be used.

5.2.1 - Consumable.

INGREDIENT	SPECIFICATION	SYMBOL	Lubricants used by HAULOTTE	ELF	TOTAL
Hydraulic oil	AFNOR 48 602ISO V G 46	◇	BPSHF ZS 46	HYDRELFDS 46	EQUI-VISZS 46
Extreme pressure lithium grease	ISO - XM - 2	◌		CARDREXA-DC 1	
Lead-free grease	Grade 2 or 3	○	ESSOGP GREASE	MULTIMOTIVE 2	MULTIS EP 2
Exchange or specific operation		⬡			
Loctite 8021 LS 60 cat. N° 26470		◌			
ORGANIC hydraulic oil		◇			

5.2.2 - Maintenance plan

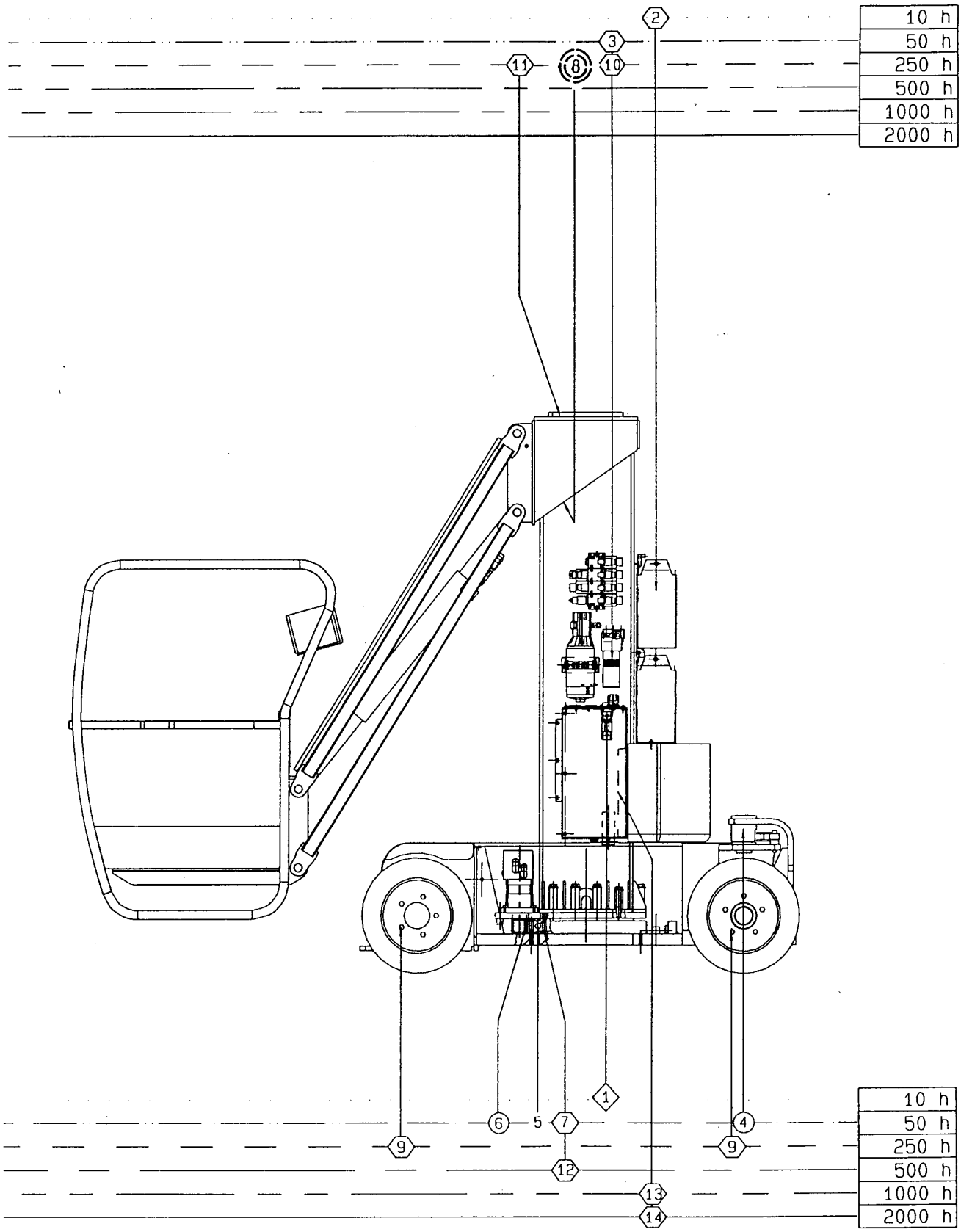

https://truckmanualshub.com/

5.2.3 - OPERATIONS

FREQUENCY	OPERATION	REFERENCE
Every day or before each start of operation	• Check - hydraulic tank level. See chap. 4.3.3. - electrolyte level in the batteries. See chap. 4.3.3.	plan ref.1 plan ref.2
Every 50 hours	• Grease: - wheel pivot axles. - slew ring: bearing. - slew ring: teeth. CAUTION: after the first 50 hours: • Change the hydraulic filter cartridge. See chap. 5.3.1. (see frequency 250 hours) • Check tightness of slew ring screws. (see frequency 500 hours)	plan ref.4 plan ref.5 plan ref.6 plan ref.3 plan ref.7
Every 250 hours	• Change the cartridge of the hydraulic filter. See chap. 5.3.1. • Grease the friction parts of the mast, check pad wear. • Check tightness - of the wheel nuts. - of the upper cover screws.	plan ref.10 plan ref.8 plan ref.9 plan ref.11
Every 500 hours	• Check tightness of the slew ring screws. • If using organic oil, emply the hydraulic oil tank.	**plan ref.12**
Every 1000 hours	• Empty the hydraulic oil tank (capacity 25 l).see chap. 5.3.3.	**plan ref.13**
Every 2000 hours	• Empty the tank and the whole hydralic oil circuit. See chap. 5.3.3.	**plan ref.14**

5.3 - OPERATIONS

- For filling and lubrication operations, only use the greases and lubricants recommended in the table in Chap. 5.2.1, page 35.
- Collect emptied oil to prevent environment contamination.

5.3.1 - Hydraulic oil filter

- Filter without clogging indicator (see frequency 50 and 250 hours)
- unscrew the cartridge (ref.1 photo 7)
- screw a new cartridge into place.

5.3.2 - Hydraulic oil tank

- Oil change:
  - a cap enables the hydrualic circuit to be emptied after unscrewing the filling cap (ref.2 photo 4).

5.3.3 - Electric batteries

To have access to the lower tray (ref.3 photo 7), pivot the upper tray (ref.2 photo 7).

Photo 10: Electric batteries

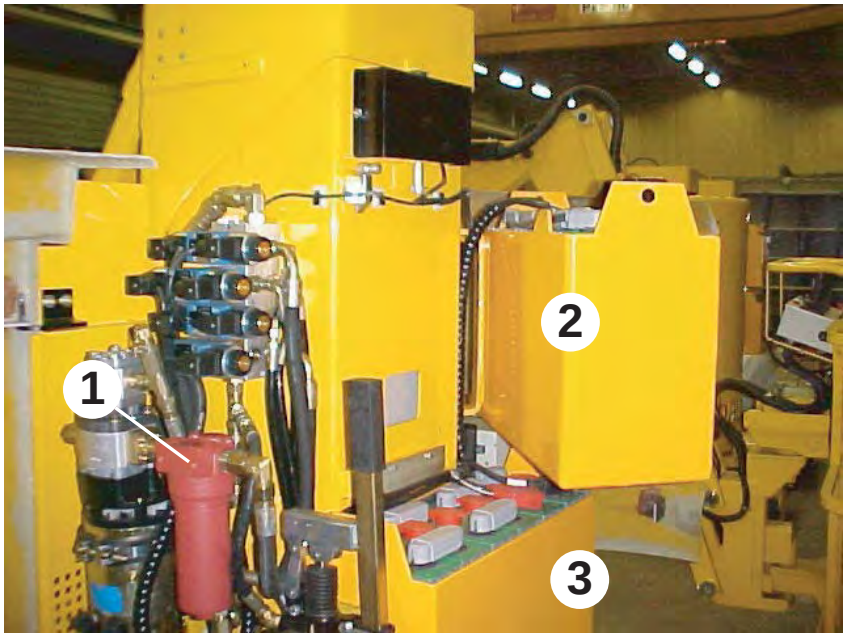

https://truckmanualshub.com/

6 - OPERATING INCIDENTS

REMINDER: Respecting the machine's operating and servicing instructions will enable you to avoid most incidents.

However, certain incidents may arise and before any intervention, it is essential to consult table 6.1. If the incident is listed, simply follow the instructions.

Only common incidents whose solutions can be implemented by an operator are listed. For all other incidents, contact your PINGUELY HAULOTTE representative or the plant's After-sales service.

Before diagnosing a failure, check that:

- the emergency stop "palm buttons" on the turntable and platform are unlocked
- the circuit breakers on the turntable panel are pushed in.

The speed chopper has a failure indication system on the timer display. To diagnose a failure, consult the table below, note the alarm code and pass it onto the After-sales service, who will given you the instructions to follow.

6.1 - TROUBLE-SHOOTING

CODE	ALARM	PROBABLE CAUSES	REMEDIES
1	**LOW BATTERY**	• The battery is discharged. • The alarm is only indicated if the "BATTERY CHECK" option has been selected. • Reduces the traction current and disables lifting movements at approximately 10% of residual charge.	• Recharge the batteries.
2	**CAPACITOR CHARGE**	• The alarm is given if the capacitors take more than 500 ms to charge, in the "KEY ON" position. • The most likely cause is a fault on the unit or power supply.	• Exchange the chopper
3	**NO ISOLATION**	• Indicates a + or - current leak to the machine chassis.	• Search for an insulation fault on the machine
4	**PRESSURE NOT OK**	• The overload pressure switch has detected an overload in the basket.	• Unload the platform
5	**STEER SENSOR KO**	• The microprocessor indicates that the steering potentiometer signal is not in the range defined in the program.	• a) program error; • b) broken steering potentiometer.
6	**RISERVATO AD MDI**	• No serial line reception	• Check display panel connection
7	**CONTACTOR DRIVER**	• This alarm is indicated if there is an error on the closed mains switch.	• a) driver open; • b) fault in the switch control circuit.
8	**CONTACTOR CLOSED**	• Test performed on switching on, checking that the mains switch is actually open.	• a) mains switch stuck; • b) this alarm may be caused by a malfunction of the field power unit.
9	**DRIVER SHORTED**	• This alarm is indicated in the case of an error on the open mains switch	• a)its coil is in short-circuit; • b)anomaly in the switch control circuit; • c)cabling error; • d)fault in the safety system circuit (often related to "POWER FAILURE")
10	**SERIAL ERROR #1**	• Incorrect reception or reception of an incoherent message from the selected serial card.	• Check station connectors
11	**BRAKE DRIVER KO**	• This alarm appears when there is a problem on the electrobrake driver.	• a) driver in short--circuit; • b) defective driver; • c) defective voltage command circuit on the electrobrake.
12	**MICRO CONTROL KO**	• The logic micro-controller or its links are defective	•
13	**FORW + BACK**	• The test is performed continuously, giving the alarm if two operation directions are given at the same time.	• a)Defective cabling; • b)Operation micro switch stuck; • c)Erroneous movement

CODE	ALARM	PROBABLE CAUSES	REMEDIES
14	**INCORRECT START**	• Incorrect start sequence. The machines only starts if the sequence is respected: key-bar (or seat) - operation	• Humidity in the upper station: blow the card.
15	**POWER FAILURE**	• Short-circuit on the valve, on the mains or on the brakes.	•
16	**RIGHT I = 0 EVER**	• The test is performed during operation: it checks that during operation, current is greater than a minimum value. Otherwise, this alarm appears and the machine is blocked.	• a) See RIGHT STBY I HIGH
17	**LEFT I = 0 EVER**		
18	**R VMN NOT OK**	• The test is performed during active and inactive periods. It checks coherence of the VMN in relation to the command	• a) Check that motor cabling is correct; • b) Check that the motor is insulated from the chassis; • c) Power fault
19	**L VMN NOT OK**	• The test is performed during active and inactive periods. It checks coherence of the VMN in relation to the command	• a) Check that motor cabling is correct; • b) Check that the motor is insulated from the chassis; • c) Power fault
20	**LEFT STBY I HIGH**	• The test is performed during inactive periods and checks that the current is zero. If it is not, the alarm is given. The alarm disables the machine.	• a) The current sensor is broken • b) Fault on the retroaction circuit or logic or power unit
21	**RIGHT STBY I HIGH**		
22	**HIGH FIELD CURRENT**	• Anomaly in the field current. Field current is not zero during inactive periods.	• a) anomaly on the current receiver; • b) fault on the field power unit
23	**VFIELD NOT OK**	• Test performed during inactive periods. In such conditions, field input voltage should correspond to ½ Vbatt. The alarm is given if voltage is different from this value.	• a) Check that the motor is insulated from the chassis; • b) The motor field is not connected to the chopper; • c) Fault on the power section concerning the field
24	**NO FIELD CURRENT**	• Anomaly in the field current. The field current is zero during operation.	• a) anomaly on the current receiver; • b) field cable disconnected
25	**EEPROM KO**	• Fault in the memory zone containing configuration parameter data. The alarm disables the machine. If the fault does not disappear after switching the ignition key on and off again, change the Eeprom. Parameters recorded previously may have been lost and replaced with default values.	•
26	**CHOPPER NOT CONFIGURATED**	• The chopper is not programmed or incorrectly programmed.	•
27	**THERMAL PROTECTION**	• This indication shows that chopper temperature is over 75°C. Minimum current is gradually reduced until zero when temperature reaches 90°C.	•
28	**EVP NOT OK**	• Proportional electrovalve command values incoherent	•

CODE	ALARM	PROBABLE CAUSES	REMEDIES
29	**CHECK UP NEEDED**	• Alarm informing that machine maintenance is due. Time >300 hours. Does not disable the machine but continues to show the fault until the message is eliminated (CHECK UP DONE on ON)	•
30	**CONTACTOR OPEN**	• The control microprocessor is defective. A dangerous situation not detected by the main microprocessor has been identified.	•
31	**VACC NOT OK**	• The test is performed during inactive periods. The alarm indicates that accelerator voltage is greater than 1 V compared with the minimum value recorded.	a) Potentiometer wire broken b) Potentiometer cabling incorrect. c) Potentiometer defective (interrupted) • d) Serial command programming is incorrect (SERIAL TILLER)

https://truckmanualshub.com/

7 - HYDRAULIC DIAGRAMS

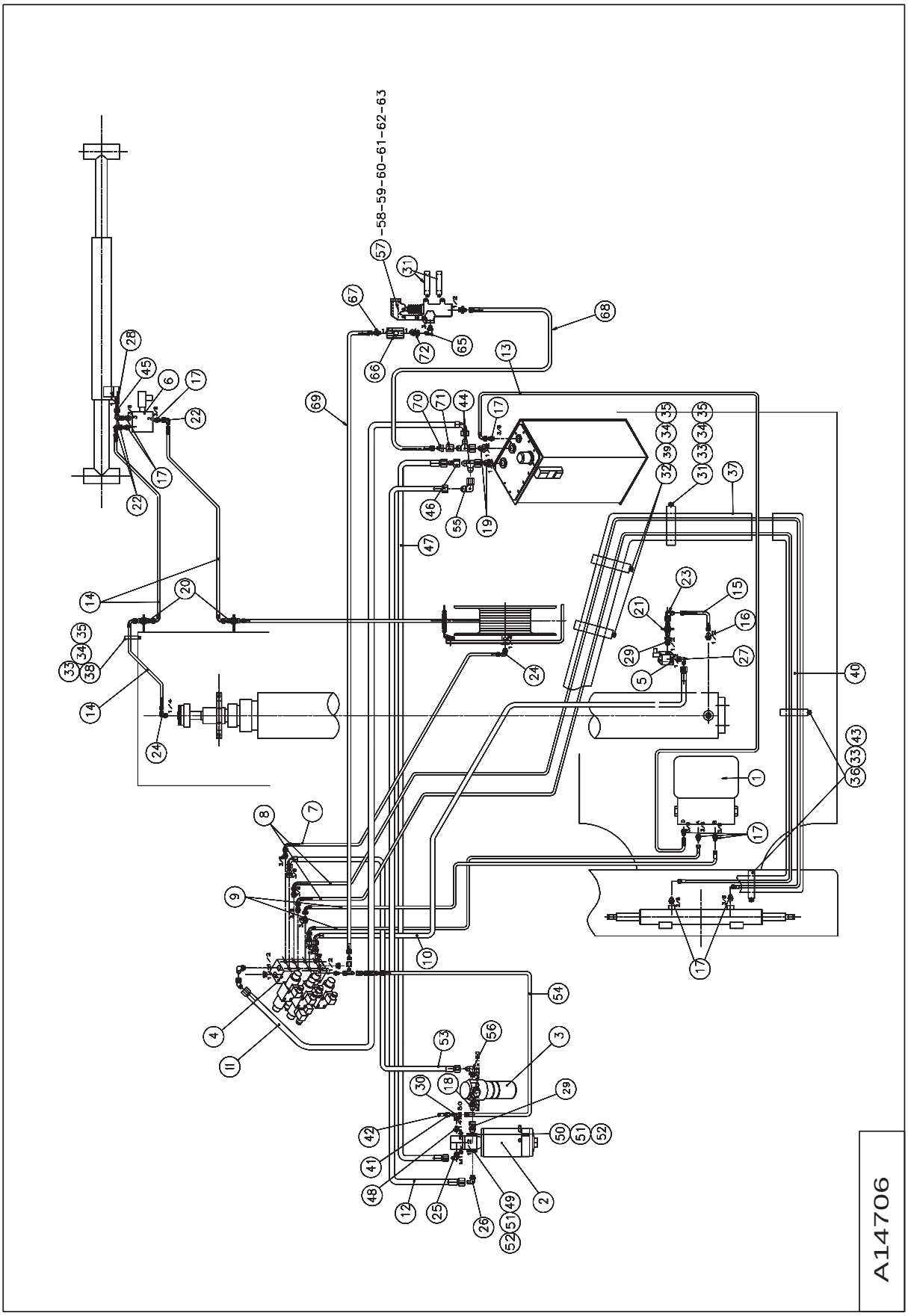

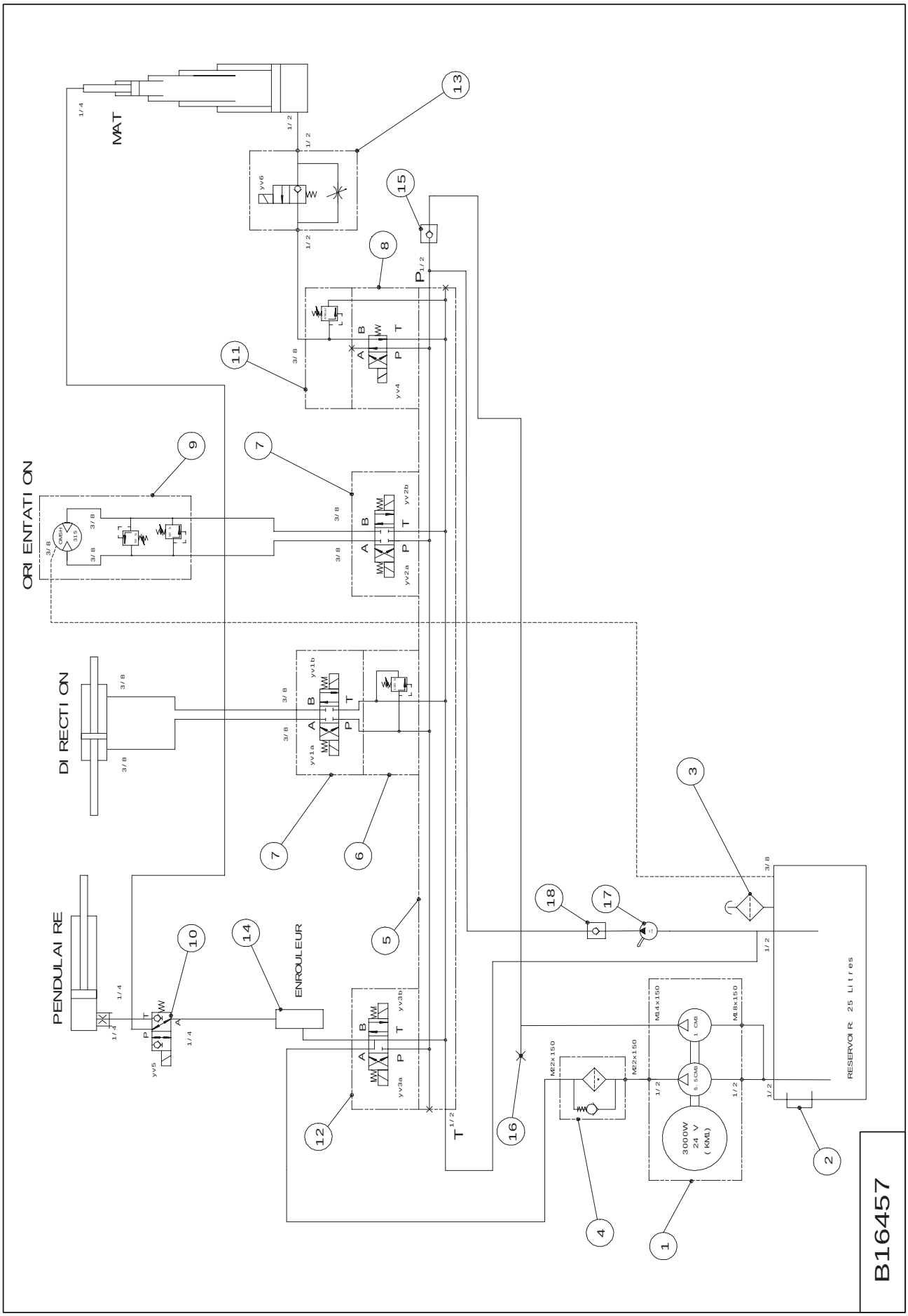
MAT
ORI ENTATI ON
DI RECTI ON
PENDULAI RE
ENROULEUR
RESERVOI R: 25 Litres
3000W
24 V
(KM1)
B16457

8 - WIRING DIAGRAMS

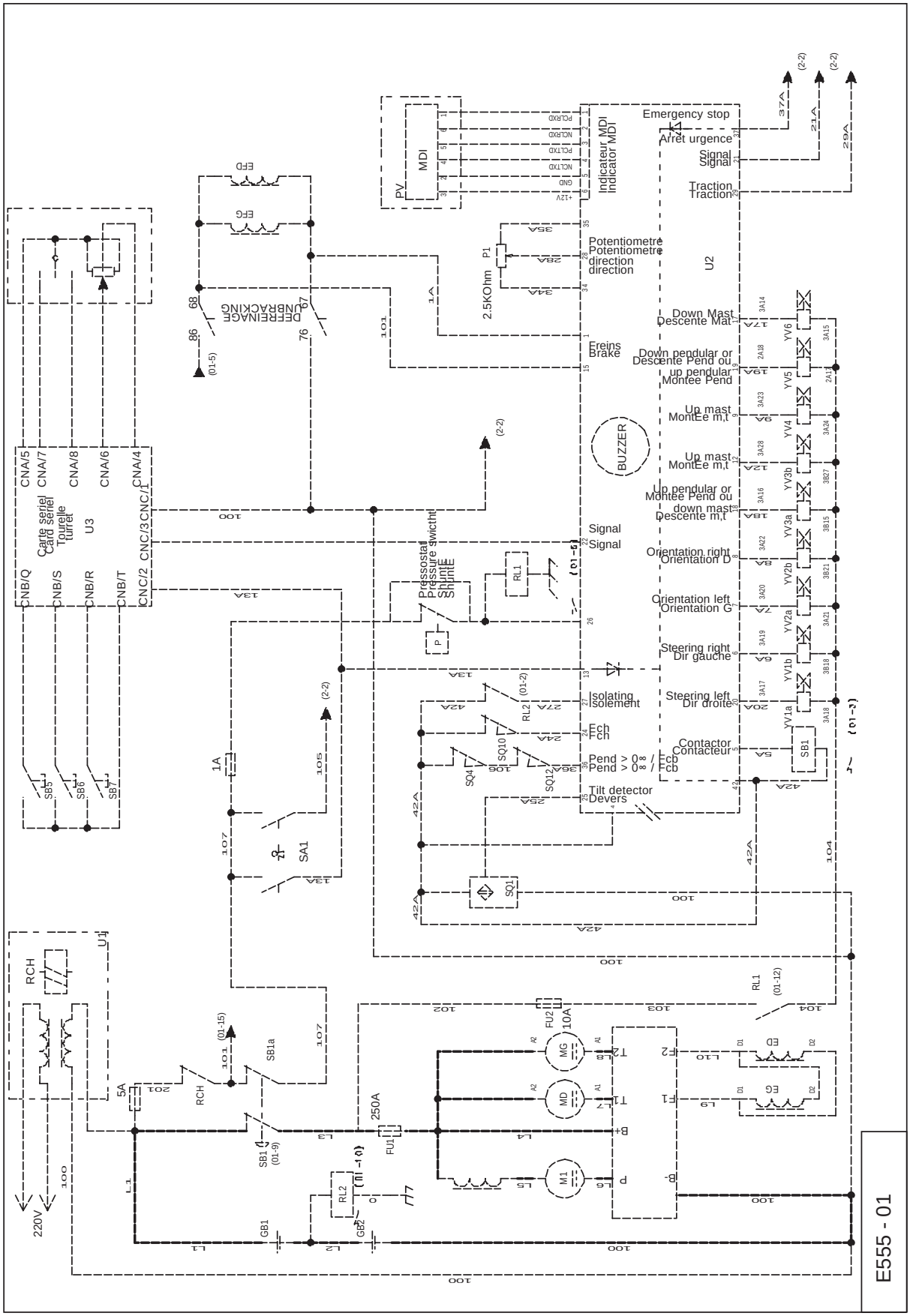

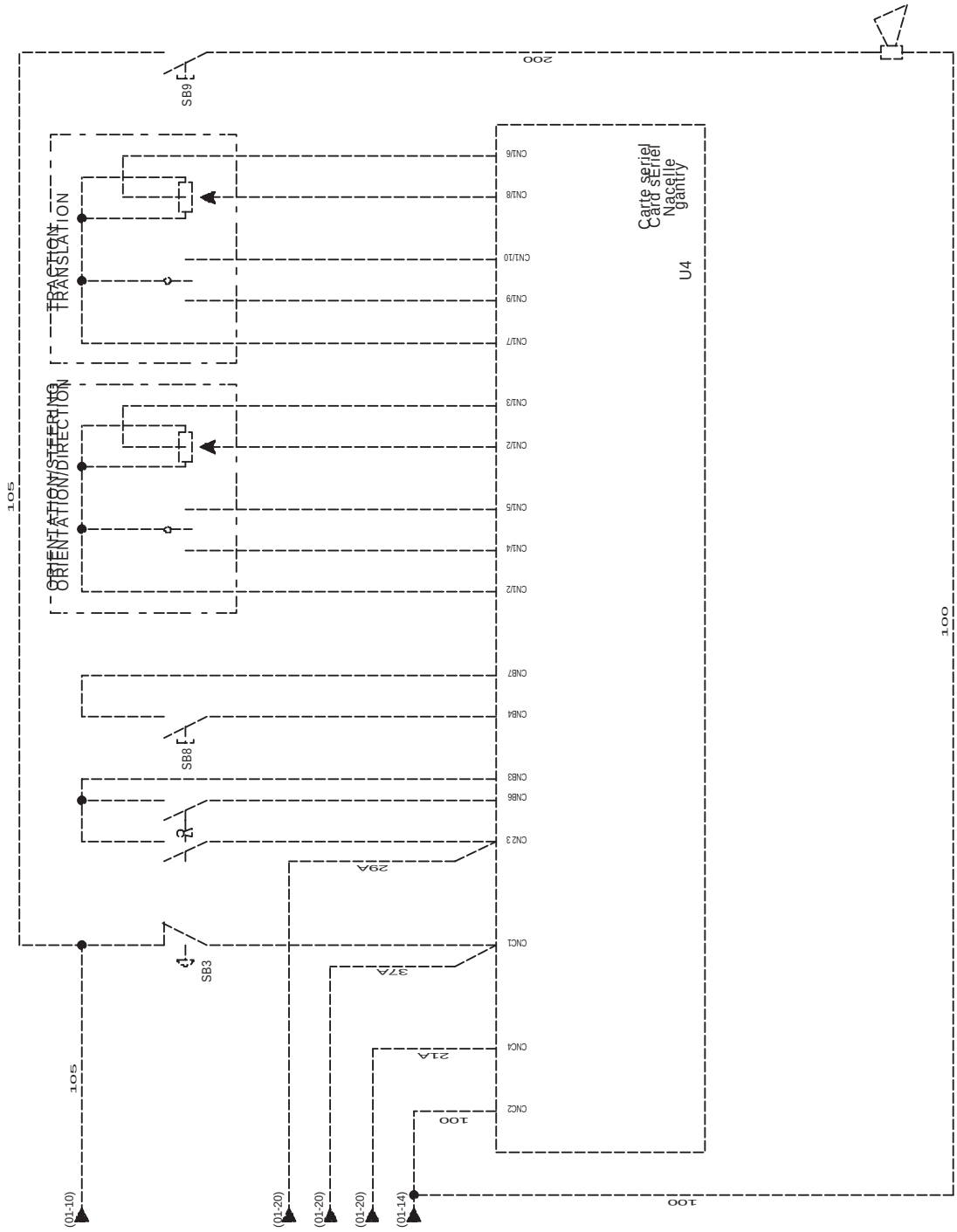
TRANSLATION
TRACTION
ORIENTATION/DIRECTION
STEERING
Carte serie
Card serie
Nacelle
gantry
U4
SB9
SB8
SB3
CNU/6
CNU/8
CNU/10
CNU/9
CNU/7
CNU/3
CNU/2
CNU/5
CNU/4
CNU/2
CNB7
CNB4
CNB3
CNB6
CNZ3
CNC1
CNC4
CNC2
29A
37A
21A
100
105
200
(01-10)
(01-20)
(01-20)
(01-20)
(01-14)

E555 02

https://truckmanualshub.com/

9 - SAFETY SYSTEMS

9.1 - MACHINE ELEMENTS

9.1.1 - Power supplies and fuses:

FU1 1A	Overload protection
FU2 5A	Command protection
FU3 10A	Electrovalve protection
FU4 250A	Power fuse

9.1.2 - Command inputs:

SA1	Station selector (turntable panel)
SA2	Movement selector switch (platform panel)
SB1	Emergency stop; line contactor
SB3	Emergency stop; platform
SB5	Jib control
SB6	Mast control
SB7	Turntable rotation
SB8	Movement validation
SB9	Horn
SM1	Turntable up/down, orientation manipulator
SM2	Platform orientation, steering manipulator
SM2	Platform travel manipulator

9.1.3 - Safety inputs:

SQ1	Tilt
SQ4	Tilt reset / Jib safety system > 0°
SQ10	Top end of travel safety sensor (mast)
SQ12	Tilt reset / Bottom end of travel safety sensor (mast)

9.1.4 - Relays:

RL1	Overload relay (inactive)
RL2	Insulation relay

9.1.5 - Electrovalve logic outputs:

YV1a	Right steer
YV1b	Left steer
YV2a	Left orientation
YV2b	Right orientation
YV3a	Jib up or mast down
YV3b	Mast up
YV4	Mast up
YV5	Jib down or jib up
YV6	Mast down

9.1.6 - Management elements:

U1	Charger
U2	Chopper
U3	Turntable serial card
U4	Platform serial card

9.1.7 - LEDs:

PV	Timer; battery indicator