https://truckmanualshub.com/

Kaiser. Performance counts.

KAISER

NEW GENERATION

S12 ALLROAD S10

KAISER MOBILE WALKING EXCAVATORS

https://truckmanualshub.com/

PERFORMANCE AND EFFICIENCY

WHEN PERFORMANCE COUNTS

The latest generation of KAISER S10 and S12 mobile walking excavators again sets benchmarks in terms of performance and efficiency.

Evolution of the technology leader
Development of the S10 and S12 Allroad has been taken a step further in several areas. Core features include the optimised hydraulic power combined with the appropriate cooling system for particularly power-intensive applications as multifunctional carrier. Cutting-edge engine technologies with a wider choice of options and engine models provide ample power reserves and continue to set the benchmark in this tonnage class. In addition, working time has been extended by an increased tank capacity.

Stable – even in extreme terrain
This is where KAISER mobile walking excavators have always been the industry benchmark. New: greater maximum wheel leg mobility, which increases wading depth to 2.45 metres.

https://truckmanualshub.com/

https://truckmanualshub.com/

S12 ALLROAD
S10

Digging envelope KAISER S12 Allroad

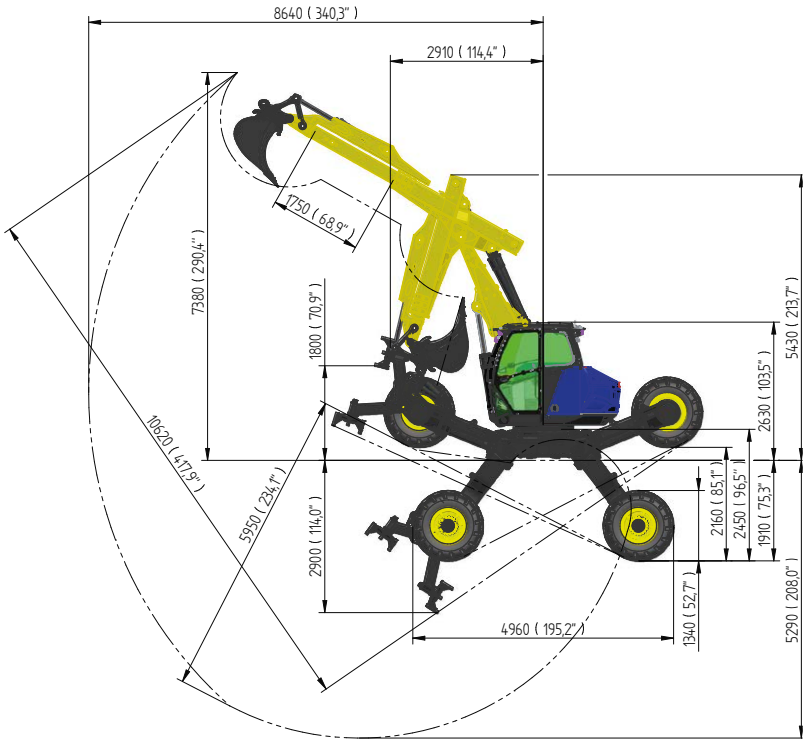

Digging envelope KAISER S10

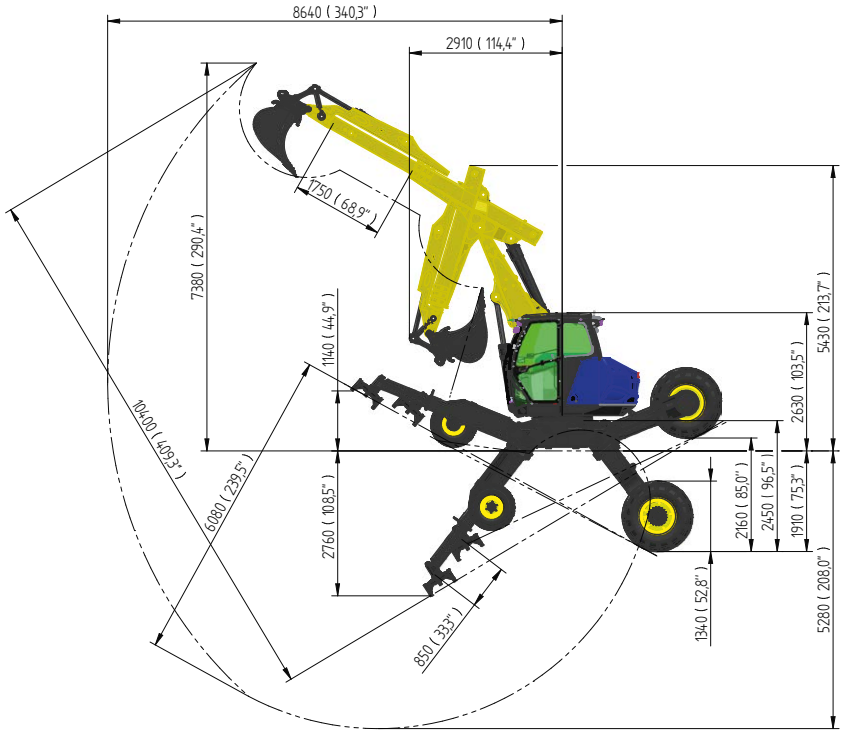

Undercarriage KAISER S12 Allroad

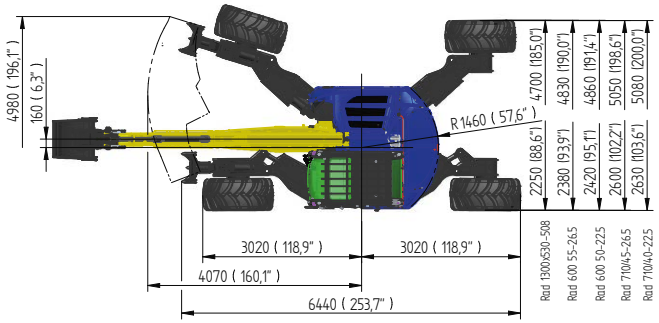

Undercarriage KAISER S10

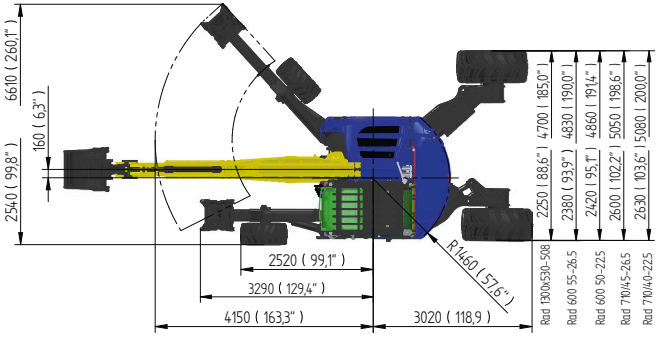

Turning radius KAISER S12 Allroad

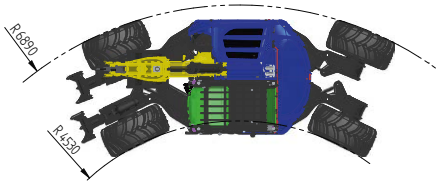

Turning radius KAISER S10

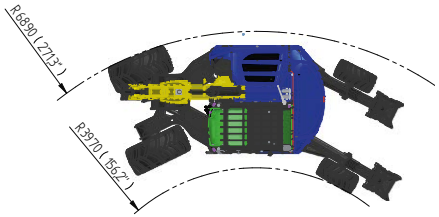

Subject to change without notice.

https://truckmanualshub.com/

TECHNICAL SPECIFICATIONS S10/S12

Engine

HP engine model Perkins 1204J-E44TTA	Emissions Max. power Torque	EU2016/1628 Stage V; US EPA Tier 4 Final 140 kW / 190 hp @ 2000 rpm 815 Nm @ 1400 rpm
Perkins 1204J-E44TA	Emissions Max. power Torque	EU2016/1628 Stage V; US EPA Tier 4 Final 110 kW / 155 hp @ 2000 rpm 560 Nm @ 1400 rpm
Perkins 1104D-E44TA	Emissions Max. power Torque	EU97/68 Stage IIIA; US EPA Tier 3 106 kW / 144 hp @ 2000 rpm 558 Nm @ 1400 rpm
Voltage	24 V	
Displacement	4400 ccm	
Service interval	500 operating hours	
Diesel tank capacity (fuel tank / reserve tank)	390 l (140/250)	
Capacity AdBlue tank	19 liters	

Cab

Cab	ROPS ISO3471 / FOPS ISO3449 approved safety cab, upper windscreen assisted, integrated working light
Driver seat	Air-suspended comfort seat with lap belt GRAMMER air-suspended super comfort seat with headrest (option), four-point safety belts (option)
Air-conditioning	Central operating element for heating and air-conditioning (option)
Control	Joysticks on control carriers at seat
Camera	Rear and side view camera

Performance data

Lifting capacity	3 m 4 m 6 m	9500 kg 6600 kg 4000 kg
Breakout force (ISO6015)	111 kN	
Ripping force (ISO6015)	78 kN	
Wading depth of hydraulic undercarriage (option)	2.45 m	
Travel speed	Variable, 0-15 km/h, Two-speed, 0-15 km/h, Dependent on model and tyre size	
Weight S10 Weight S12 Allroad	from 12,800 kg from 14,200 kg	

Hydraulics

Flow rate, working pump	Max. 350 l/min	320 bar
Flow rate, drive pump	Max. 180 l/min	400 bar
Flow rate, fan pump	Max. 44 l/min	200 bar
Hydraulic system	Three-circuit LS / LUDV load-independent flow-sharing system, option of four-circuit system (ROTO*line*)	
Pump control	Bosch Rexroth LUDV system with electronic power limiting controller, pressure cut-off	
Mode selection	Three individually adjustable performance modes and driver profiles for efficient and environmentally friendly working	
Speed setting	Stepless adjustment of setting over the entire speed range	
Filtrers	Return filter 10 µm Fine filter 1 µm	
Cooling system	3-circuit cooling system, coolers arranged one above the other with reversible fan drive for cleaning Stepless, hydraulically driven fan	
Cylinders	With joint bearings Lift and dipper cylinder with pipe fracture safety valve (ISO8643) Undercarriage cylinder with pilot-controlled check valves	
Circuit I	max. 180 l/min	120-320 bar
Circuit II	max. 40 l/min	120-320 bar
Circuit III (option)	max. 80 l/min	120-320 bar
ROTO*line* (option)	max. 220 l/min	100-350 bar
Quick coupler circuit		
Rope wind circuit, standard	max. 40 l/min	320 bar
Rope wind circuit, high flow	max. 100 l/min	320 bar
Return		
Leakage oil line (option)		

Swing system

Drive	Torque control in open circuit, radial piston motor with spring applied brake
Slewing speed	0 – 9 rpm, stepless
Slewing torque	57,000 Nm
Slewing ring	Module 10 with hardened surfaces
Brake	Negative holding brake, lockable

https://truckmanualshub.com/

Kaiser. Performance counts.

KAISER

Liechtenstein, Austria, Italy, Finland, Slovakia and the USA. What does it mean to have 6 international production plants and a network of over 100 sales and service partners worldwide?

Customer proximity and regional support!

THE RIGHT KAISER PRODUCT FOR YOUR APPLICATION

MOBILE WALKING EXCAVATOR

S10 and S12 stand for the latest generation of KAISER mobile walking excavators. They set benchmarks in performance and efficiency.

S12 Allroad

S10

The «power package» in the 10 t class.

S8

Proven toughness with the EU Stage IIIA engine generation.

S2

ROAD-RAIL EXCAVATOR

Perfectly matched to the application of the railway environment.

S22RR

VEHICLES FOR SEWER CLEANING AND INDUSTRIAL DISPOSAL

The international focus on modern environmental technologies has led to the growing importance of efficient, high-performance vehicles for sewer cleaning and industrial disposal. The KAISER Group is a leading player in the world market.

Recycling | **Sewer cleaning** | **Water treatment** | **Dry vacuumation** | **Hydrovac**

514092022 EN

Subject to change without notice. Technical specifications may change, depending on the chosen options and accessories. All photos and diagrams are for illustration only.

KAISER AG
Vorarlbergerstrasse 220
9486 Schaanwald, Liechtenstein
T +423 377 21 21
kaiserag@kaiser.li
www.kaiser.li

MORO KAISER S.R.L.
Via Pontebbana, 16
33080 Fiume Veneto (PN), Italy
T +39 0434 951 211
infomoro@morokaiser.it
www.morokaiser.it

KAISER PREMIER LLC
2550 E. Bijou Ave.
Fort Morgan, CO 80701, USA
T +1 970 542 1975
sales@kaiserpremier.com
www.kaiserpremier.com

OY EUR-MARK AB
Jakobstadsvägen 39
66900 Nykarleby, Finland
T +358 20 73 45 800
info@eurmark.fi
www.kaiser-eurmark.fi

KAISER Fahrzeugtechnik GmbH
Gewerbestraße 4
6710 Nenzing, Austria
T +43 5525 641 80
mail@kaiser-fahrzeugtechnik.at
www.kaiser-fahrzeugtechnik.at

KAISER Eastern Europe s.r.o.
Priemyselná 604/5
922 02 Krakovany, Slovakia
T +421 33 7353 500
kaiser@kaiser-ee.sk
www.kaiser-ee.sk