https://truckmanualshub.com/

ELECTRIC FORKLIFT TRUCK
SERIES Z 60-65-70-80 H

CAPACITY 6.000-6.500-7.000-8.000 Kg
CENTER OF GRAVITY 600mm
VOLTAGE 96V
HIGH PERFORMANCES
LONG AUTONOMY
EXTREME COMPACTNESS
WITH A REALLY SHORT
TURNING RADIUS
HIGH DRIVING POSITION

Z

carer
Electric Forklift Trucks

carer
Electric Forklift Trucks

C.A.R.E.R. Srl
Via Copernico 13
48010 Cotignola (RA) Italia
Tel. +39 0545 1938010
Fax +39 0545 908070
info@carerforklift.com
www.carerforklift.com

https://truckmanualshub.com/

ELECTRIC FORKLIFT TRUCK CARER Z 60-65-70-80 H

Technical data in accordance with VDI 2198

MAIN FEATURES

CAPACITY 6.000-6.500-7.000-8.000 Kg
CENTER OF GRAVITY 600mm
VOLTAGE 96V
TYRES C-SE- DUAL SE
MOTORS AC
ADVANCED MULTIFUNCTION DIGITAL DISPLAY (AMD)
OIL IMMERSED BRAKES
TRAVEL SPEED 15,0 km/h
LIFTING SPEED 0,39 m/s
BATTERY 96V 1000Ah
HIGH TILT CYLINDERS

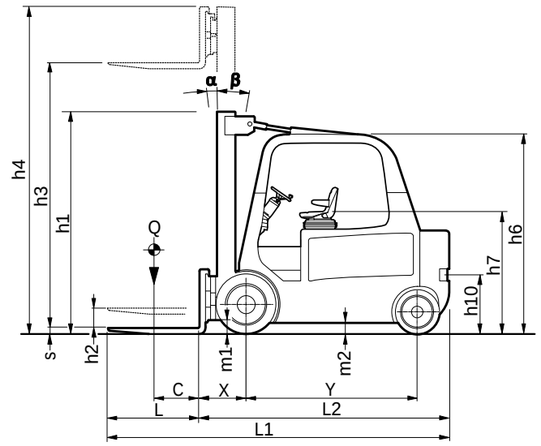

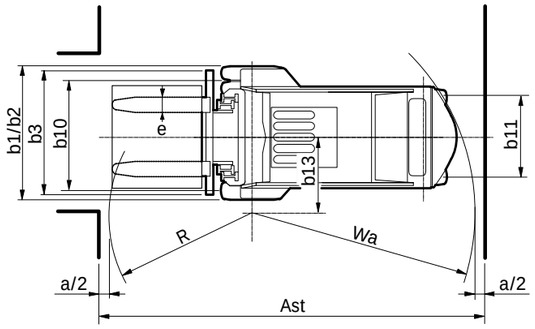

The benefits of choosing CARER

The series Z60-80 H of CARER electric forklift trucks range are designed to ensure high performance, long autonomy of the battery and low operating costs. Extremely compact with a really short turning radius, these trucks are designed to be compact and space-saving but at the same time to ensure high performance, reliability and ergonomics; can also be customized and adapted to every condition of use and application, safe and reliable to deal with even the toughest tasks

The compactness of the truck and the great turning capabilities allow faster and less time storage of the load even in narrow and cramped hallways and aisle
All trucks in the series Z60 65 70 80 H are equipped with single super-elastic tires, but, as an option

also possible to fix the cushion or the twin type.
The extreme compactness does not sacrifice the habitability of the driving position that turns out to be ergonomic, with excellent accessibility and with all the equipment clearly visible.
The steering enhances the dynamic qualities of the forklift truck perfectly combining the lightness of the steering wheel and driving precision.

Oil bath braking system guarantees extraordinary effectiveness and durability. Periodic maintenance required for the brake unit will reduce to a regular oil change. The electric braking allows energy recovery to the release of the accelerator or the reversal of the direction of travel.

The particular shape of the frame allows you to fit high-capacity batteries to meet every need.

CHARACTERISTICS	1,1	Manufacturer		C.A.R.E.R. Srl			
	1,2	Type		Z60H	Z65H	Z70H	Z80H
	1,3	Power Source: Battery, diesel, gas,electric mains		battery	battery	battery	battery
	1,4	Operation: manual, pedestrian, stand, seat		seated	seated	seated	seated
	1,5	Load capacity	Q (t)	6,0	6,5	7,0	8,0
	1,6	Load center	C (mm)	600	600	600	600
	1,8	Load distance	X (mm)	625 (1)	625 (1)	625 (1)	680 (1)
	1,9	Wheelbase	Y (mm)	1935	1935	1935	2135
WEIGHTS	2,1	Unladen weight (max.battery)	(kg)	10850	11350	11900	12350
	2,2	Axle loading laden front/rear (max.battery)	(kg)	14750/2100	15750/2100	16750/2150	18750/1600
	2,3	Axle loading unladen front/rear (max.battery)	(kg)	4950/5900	5140/6210	5320/6580	5950/6400
TYRES	3,1	Tyres: C= cushion, SE= super-elastic, PN= Pneumatic, SEG= dual super-elastic PNG= dual pneumatic, VLK= vulkollan		C-SE-SEG	C-SE-SEG	C-SE-SEG	C-SE-SEG
	3,2	Tyre size, front		840x356 - 355/65-15 - 8.25-15	840x356 - 355/65-15 - 8.25-15	840x356 - 355/50-20 - 8.25-15	840x356 - 355/50-20 - 8.25-15
	3,3	Tyre size, rear		559x203 - 23x10-12	559x203 - 23x10-12	559x203 - 23x10-12	559x229 - 23x10-12
	3,5	Wheels: Number front / rear (X = driven)		2X/2 (SEG:4X/2)	2X/2 (SEG:4X/2)	2X/2 (SEG:4X/2)	2X/2 (SEG:4X/2)
	3,6	Track width, front, standard/wide tread	b10 (mm)	1312-1361-1393	1312-1361-1393	1312-1355-1393	1312-1355-1393
DIMENSIONS	3,7	Track width, rear	b11 (mm)	1055	1055	1055	1055
	4,1	Mast tilt, forward α / back β	**α/β** (°)	4/8 (2)	4/8 (2)	4/8 (2)	4/8 (2)
	4,2	Height of mast lowered	h1 (mm)	2680	2680	2680	2792
	4,3	Free lift	h2 (mm)	100	100	100	100
	4,4	Lift height	h3 (mm)	3400	3400	3400	3400
	4,5	Height of mast extended	h4 (mm)	4370	4370	4370	4530
	4,7	Height to top of overhead guard	h6 (mm)	2650	2650	2650	2650
	4,8	Seat height	h7 (mm)	1635	1635	1635	1635
	4,12	Towing coupling height	h10 (mm)	680	680	680	680
	4,19	Overall length	L1 (mm)	4210	4210	4210	4465
	4,20	Length to face of fork	L2 (mm)	3010	3010	3010	3265
	4,21	Overall width, standard / wide tread	b1 (mm)	1669-1661-1838	1669-1661-1838	1669-1670-1838	1669-1670-1838
	4,22	Fork dimensions	exsxL (mm)	150x60x1200	150x60x1200	150x60x1200	200x60x1200
	4,23	Fork carriage ISO 2328/30, FEM / A, B		4A	4A	4A	4A
	4,24	Fork carriage width	b3 (mm)	1500	1500	1500	1500
	4,31	Ground clearance under mast, laden	m1 (mm)	150	150	150	150
	4,32	Ground clearance at center of wheelbase	m2 (mm)	110	110	110	110
	4,33	Aisle width with pallets 1000x1200mm wide	Ast (mm)	4465	4465	4465	4780
	4,34	Aisle width with pallets 800x1200mm long	Ast (mm)	4665	4665	4665	4980
	4,35	Outer turning radius	Wa (mm)	2640	2640	2640	2900
PERFORMANCES	4,36	Inner turning radius, standard/wide tread	b13 (mm)	950	950	950	1100
	5,1	Travel speed, with / without load	(km/h)	15,0/15,0	15,0/15,0	14,5/15,0	14,0/15,0
	5,2	Lifting speed, with / without load	(m/s)	0,25/0,39	0,24/0,39	0,23/0,39	0,21/0,38
	5,3	Lowering speed with / without load	(m/s)	0,50/0,40	0,50/0,40	0,50/0,40	0,50/0,40
	5,5	Drawbar pull, with / without load (S2 60 ')	(N)	6900/7500	6800/7400	6600/7300	6400/7200
	5,6	Max drawbar pull, with / without load (S2 5 ')	(N)	16400/17000	16300/16900	16100/16800	15900/16700
	5,7	Gradeability, with / without load (S2 30 ')	(%)	6,5/11	6/10,5	5,5/10	5/9,5
	5,8	Max gradeability, with / without load (S2 5 ')	(%)	10/16	9/15	8,5/14	8/13,5
	5,9	Acceleration time, with / without load (10 m)	(s)	5,8/5,4	6/5,6	6,1/5,7	6,2/5,8
MOTORS / BATT.	5,10	Service brake: mech. / Hydraulic / electric		hydr/elect	hydr/elect	hydr/elect	hydr/elect
	6,1	Drive motor output (S2 60 ')	(kW)	22	22	22	22
	6,2	Lifting motor (S3 20%)	(kW)	30	30	30	30
	6,4	Battery voltage	U (V)	96	96	96	96
	6.4.1	Battery capacity	K5 (Ah)	840/920/1000	840/920/1000	920/1000	1000
OTHER	6,5	Battery weight minimum / maximum	(kg)	2600/3050	2600/3050	2750/3050	2900/3050
	8,1	Drive control		inverter	inverter	inverter	inverter
	8,2	Working pressure for attachments	(bar)	160	160	160	160
	8,4	Average noise level at operator's ear	(dBA)	-	-	-	-

VDI 2198 *rev0 04/06/13*

(1) With integral side-shift on the mast
(2) Lifting heights > 4.5 m, 3°/ 7°.

The performance data refer to forklift truck in perfect efficiency, with battery weight corresponding to the values given in 6,5