https://truckmanualshub.com/

Instruction Sheet

Kit Number: 72101400

HEATED HAND GRIP KIT

WARNING: FAILURE TO FOLLOW INSTRUCTIONS could result in personal injury and/or damage to unit.

Read, understand, and follow all safety practices in Owner/Operator Manual before beginning.

PACKAGE CONTENTS

Check the contents of your kit for the parts listed below. Also see Figure 1.

Item	Part No.	Qty	Description
1	07500015	2	Heated Hand Grip
2	04329600	1	Light and Warmer Harness
3	06403800	1	1/2" x 7/8" Flat Steel Washer
4	06310900	1	9/16" Internal Locking Washer
5	02485700	1	On/Off Switch (includes nut)
6	05272500	1	Loctite® EA445 Fast-Cure Epoxy
7	07500121	2	1" Tube Cap
8	07517300	4	Cable Tie

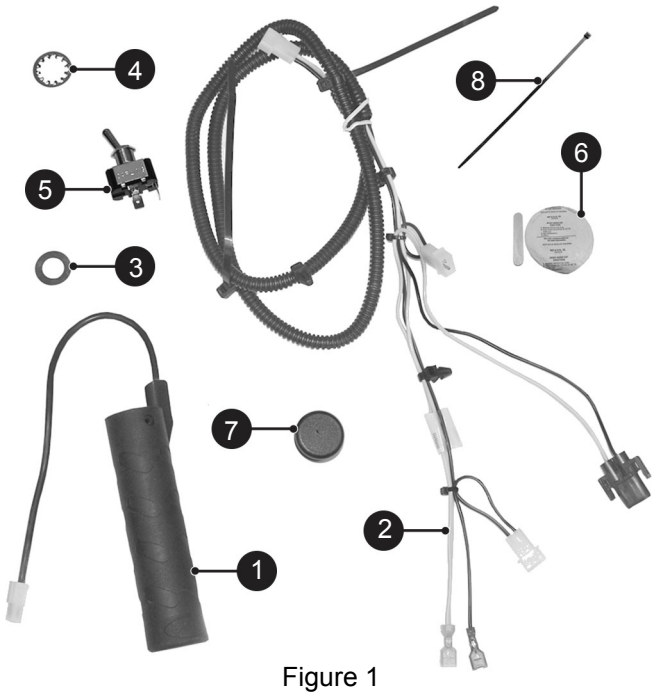

Figure 1

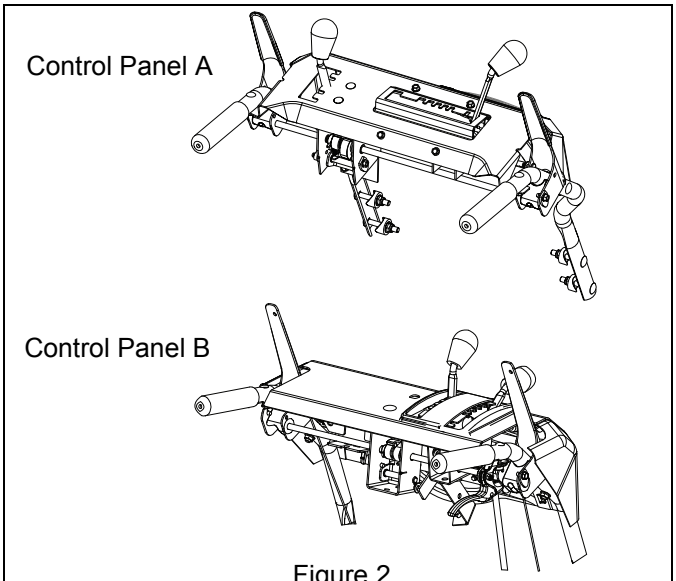

Figure 2

REMOVAL

Remove Wire Harness

1. Stop engine and remove key. Wait for moving parts to stop and hot parts to cool. Disconnect spark plug wire.
2. Disconnect wire harness from headlight.
3. Cut wire harness ties off of the handlebar, pull push pin out of engine anchor and disconnect wire harness from engine. See Figure 3. Discard harness.

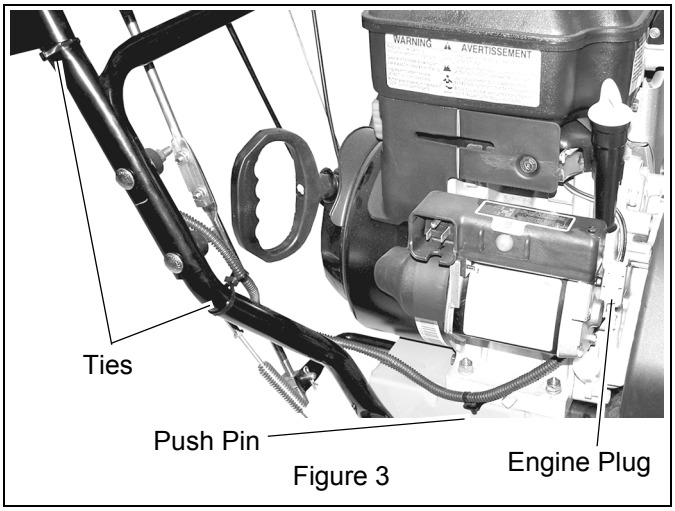

Figure 3

https://truckmanualshub.com/

INSTALLATION

Install Switch (Control Panel A)

1. Drill a 1/2" hole in the control panel in area indicated. See Figure 4.

IMPORTANT: Before drilling check the underside of the control panel to ensure it is free of any potential obstructions.

Control Panel A

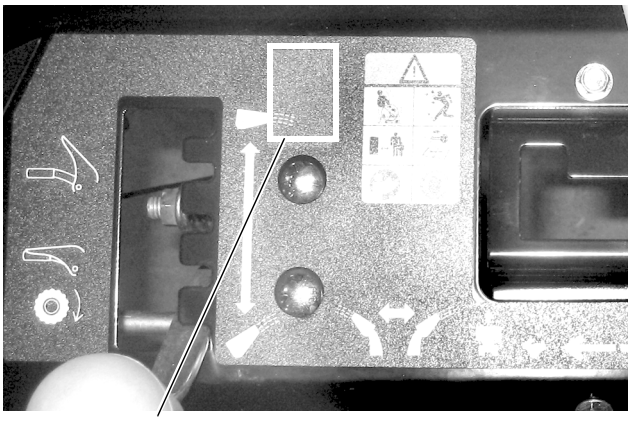

Drill 1/2" hole in control panel in this area.
Figure 4

2. Place locking washer (item 4) on top of switch (item 5).
3. Insert switch in drilled hole in control panel with thread channel facing in the direction shown in Figure 5.
4. Secure switch with flat steel washer (item 3) and nut (included with item 5). Tighten nut.

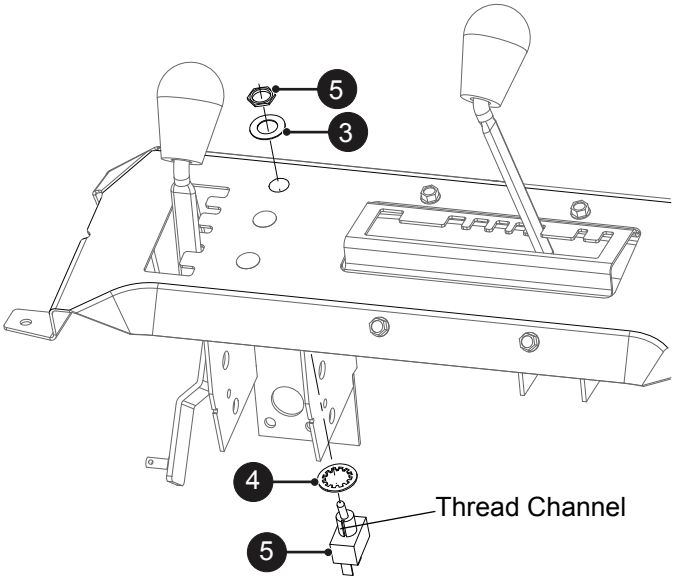

Figure 5

Install Switch (Control Panel B)

1. Drill a 1/2" hole in the control panel in area marked Figure 6.

IMPORTANT: Before drilling check the underside of the control panel to ensure it is free of any potential obstructions.

Control Panel B

Drill 1/2" hole in control panel in this area.
Figure 6

2. Place locking washer (item 4) on top of switch (item 5).
3. Insert switch in drilled hole in control panel with thread channel facing in the direction shown in Figure 7.
4. Secure switch (item 5) with flat steel washer (item 3) and nut (included with item 5). Tighten nut.

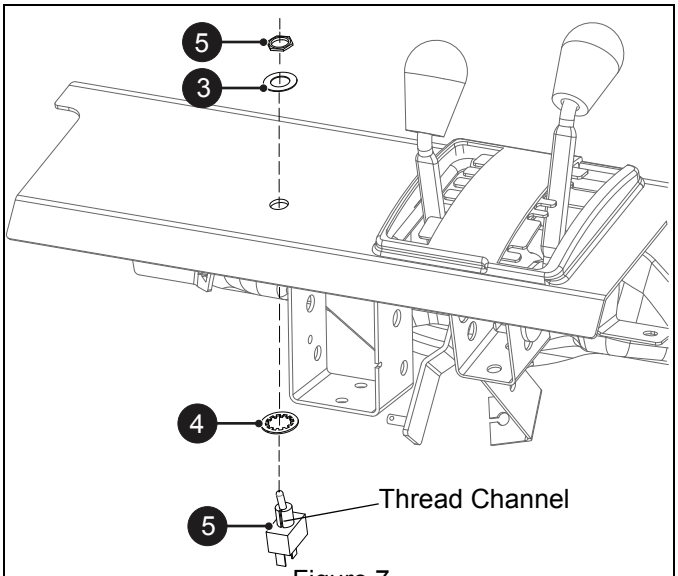

Figure 7

https://truckmanualshub.com/

Install Hand Grip

IMPORTANT: Unit and epoxy (item 6) should be at room temperature during installation and curing.

1. Cut current hand grips off of the handlebar and discard.
2. Insert one tube cap (item 7) into each handlebar end. See Figure 8.

NOTICE: Epoxy must be applied to both left and right grips and the grips installed and positioned within five minutes. Epoxy will begin to cure after five minutes.

3. Mix epoxy and apply half of the contents to the inside of each hand grip.

IMPORTANT: Follow instructions on epoxy packet for proper mixing and application.

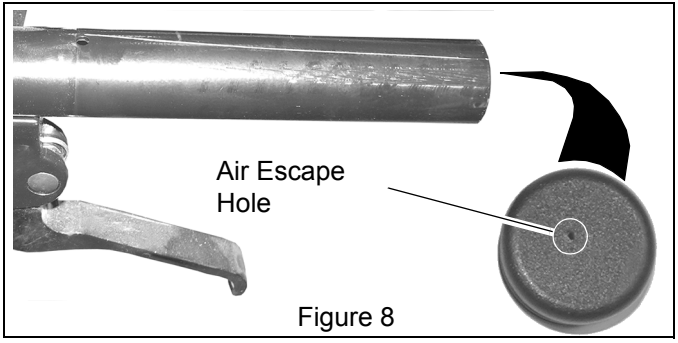

Figure 8

4. Slide grip onto handlebar while rotating the grip around the tube to help distribute epoxy evenly. Once inserted completely, position grip so that the wire and standoff are facing inward toward the control panel. See Figure 9.

NOTICE: The tube caps have a pin hole to allow for air escape for ease of assembly. See Figure 8. If the grip is difficult to slide onto the handlebar, open or enlarge the hole to allow more air to escape.

IMPORTANT: Allow epoxy to cure for 24 hours before using the unit.

5. Route wire through handlebar and below control panel. See Figure 9.

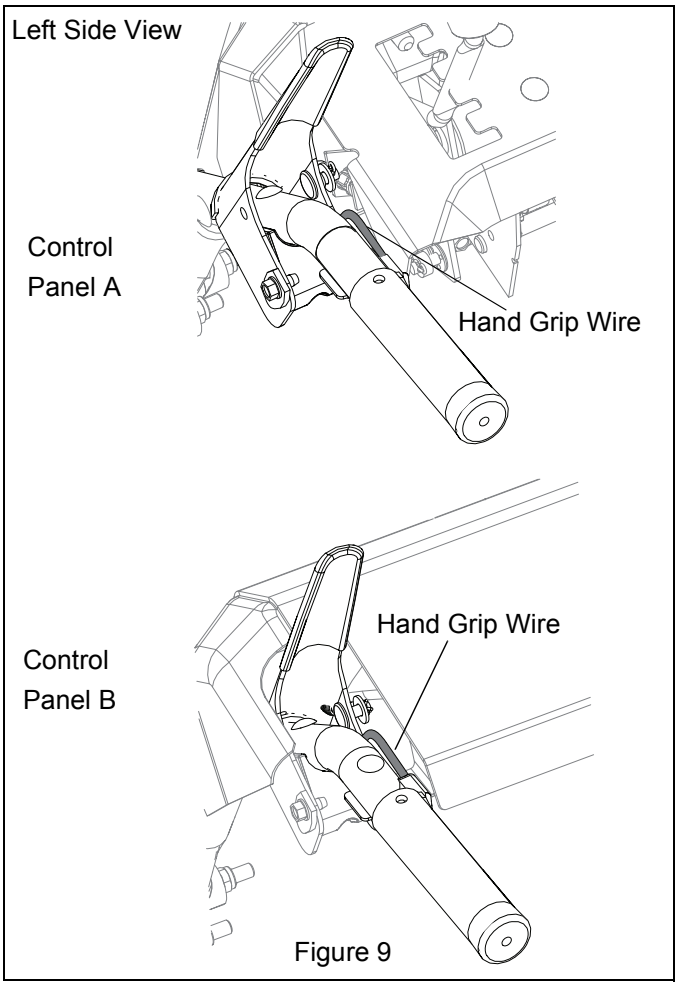

Figure 9

Install Wire Harness

1. Connect new harness (item 2) to engine, insert push pin into engine anchor, then attach ties to handlebar. See Figures 3 and 10.

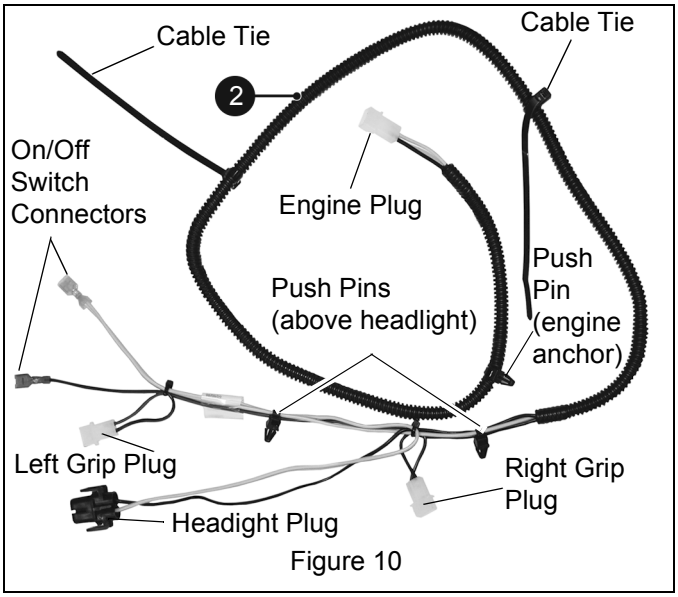

Figure 10

https://truckmanualshub.com/

Control Panel A

1. Connect wire harness to headlight and route harness under the control panel.

IMPORTANT: Ensure wires do not interfere with any moving parts or pinch points.

2. Secure wires to frame using cable ties (item 8). Use additional cable ties or electrical tape to secure wires underneath the control panel if necessary. See Figure 11.

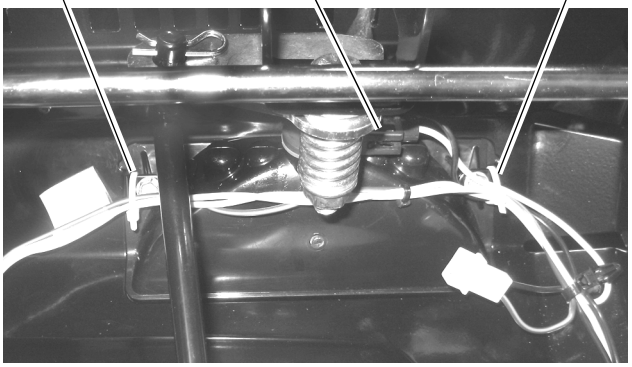

Figure 11

3. Connect wire harness to right and left grip wires and on/off switch. See Figure 12.
4. Reconnect spark plug wire.

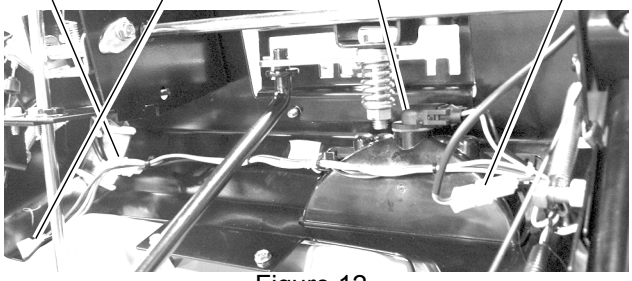

Figure 12

Control Panel B:

1. Connect headlight and insert cable harness push pins into mounts under the control panel. See Figure 13.

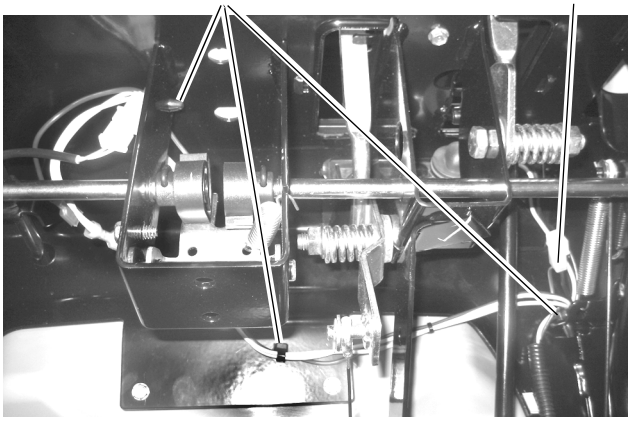

Figure 13

2. Connect wire harness to right and left grip wires and on/off switch. See Figure 14.

IMPORTANT: Ensure wires do not interfere with any moving parts or pinch points.

3. Secure wires to frame using cable ties. Use additional cable ties or electrical tape to secure wires under the control panel if necessary.
4. Reconnect spark plug wire.

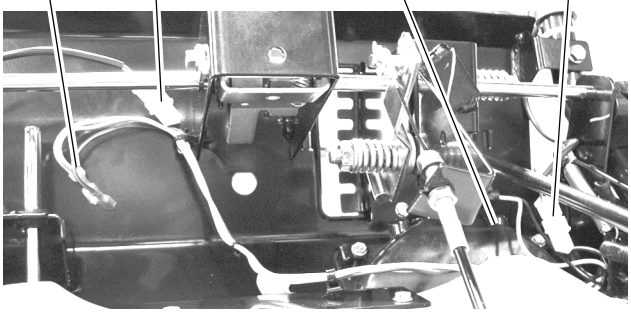

Figure 14

OPERATION

Start engine and move switch to the ON position. Verify that both grips warm after a few minutes.

If grips do not warm, stop engine and wait for all moving parts to stop. Disconnect the spark plug wire and check all connections to ensure proper installation.