https://truckmanualshub.com/

LPT20-SMS-002_EN

Instruction Manual

WP-LPT20/LPT22/LPT27 Power Pallet Truck

Operators should read and understand this manual and all warning Labels on power pallet truck before using the truck.

Keep the manual for future reference.

Release: March. 2011

https://truckmanualshub.com/

EG-Konformitätserklärung

EC Declaration of Conformity

Hiermit erklären wir, ***NOBLELIFT EQUIPMENT***
Jingyi Road, Changxing, Zhejiang, China

We herewith declare

Daß die nachfolgend bezeichnete Maschine aufgrund ihrer Konzipierung und Bauart sowie in der von uns in Verkehr gebrachten Ausführung den einschlägigen grundlegenden Sicherheits- und Gesundheitsanforderungen der EG-Richtlinien entspricht.

that the following machine complies with the appropriate basic safety and health requirements of the EC Directive based on its design and type, as brought into circulation by us.

Bei einer nicht mit uns abgestimmten Änderung der Maschine verliert diese Erklärung ihre Gültigkeit.

In case of alteration of the machine, not agreed upon by us, this declaration will lose its validity.

Bezeichnung der Maschine: **Elektrohubwagen**
Machine Description: **Power Pallet Truck**

Maschinentyp:
Machine Type: ***WP*-LPT20/LPT22/LPT27**

Einschlägige EG-Richtlinien: EG-Maschinenrichtlinie: 2006/42/EC
Applicable EC Directives: EC Machinery Directive: **2006/42/EC**

Angewandte harmonisierte Normen insbesondere:
Applicable Harmonized Standards: **EN 1726:1998 EN1175-1:1998**

Herstellerunterschrift/Datum:
Authorized Signature/Date: *Dec. 29, 2009*

Angaben zum Unterzeichner*:*
Title of Signatory: *President*

https://truckmanualshub.com/

Table of Contents

Introduction 1

1 Guidelines for Safe Operation 2

2 Overview of the Power Pallet Truck 5

3 Transport and Trial Run 9

4 Maintenance, Recharging and Replacement of the Accumulator 10

5 Operation 13

6 Maintenance of the pallet truck 18

7 Schematic Diagrams of Electric and Hydraulic System 25

NOBUFT 诺力

Introduction

Welcome to use this series of power pallet trucks. This manual gives clear information on how to master safe operation of the power pallet trucks.

The differences between various power pallet truck are described in detail in this manual. During operation and maintenance, please refer to the contents corresponding to the power pallet truck types you are using.

The safety instructions and important precautions are indicated with the following icons:

1. ---- This icon indicates the existence of a hazard that could result in personal injury if the safety instruction is not observed

2. ---- This icon indicates that a failure to observe the described instruction could lead to equipment damage

3. ---- Refers to general notes and instructions before use.

Most parts of the product are made from recyclable steel. The recycling and disposal of cast-offs resulted during using, maintenance, cleaning and disassembling the product has to comply with local regulations without pollution to the environment. The recycling and disposal of the cast-offs should only be operated by specialised personnel in the designated area. The cast-offs such as hydraulic oil, batteries and electronic units, if improperly disposed, may be hazardous to the environment and human health.

Due to continuous product improvement, Noblelift reserves the right to make changes in product designs and specifications without prior notice. For the latest product parameters, please feel free to contact us. Note: All parameters provided herein are as of the publication date of the Instruction Manual.

1 Guidelines for Safe Operation

1.1 Requirements for the driver: The power pallet truck should only be operated by personnel trained in operating the power pallet truck, who can show to the user how to move and handle loads and instruct the user how to operate the power pallet truck.

1.2 The right, duty and responsibility of driver: Clear with his own right and duty, the driver should be trained in operating the power pallet truck and also knows the contents in this operation manual very well. If the power pallet truck in use is controlled on foot, the driver should wear safety boots during operation.

1.3 Unauthorized persons are prohibited to use: The driver is responsible for managing the power pallet truck in use, and must prevent any unauthorized person from driving or operating the power pallet truck.

1.4 Malfunction and Defects: In case malfunction or defects occurs with the power pallet truck, the driver should immediately inform the supervisor. If the power pallet truck can not be operated safely, e.g. with worn wheels and brake malfunction, always stop using it until repaired completely.

1.5 Safety operation and environment protection

The checking and maintenance work described in this chapter should be executed according to the time intervals in the maintenance list.

Never modify any parts, especially safety devices of the power pallet truck without permission. Never change the operation speeds of the power pallet truck.

All original spare parts from the factory are verified by Quality Assurance Department. Only use spare parts from the manufacturer for the guarantee of the safety and reliability of power pallet truck operation. The replaced material such as oil or fuel should be disposed of according to environment protection regulations.

1.6 Dangerous area: Dangerous area generally refers to these locations, in which power pallet truck or its lifting mechanism (e.g. fork or accessories) is moving, lifting or lowering, thus being dangerous to persons in this area, or in which the truck is handling loads. Generally the scope of this area extends to locations to which the loads or accessories on the truck is lowered.

Unauthorized persons must be ordered to leave dangerous areas. The driver should always give warning if there is any risk of human injury. If the warned persons still stay in dangerous area, the driver should stop the power pallet truck immediately.

Use of the flip down platform and side guard rail for this truck may cause crushing and shearing injuries to personnel.

1.7 High-risk environment: Special protection measures shall be adopted in highly dangerous working environments.

The truck is not designed for use in high-risk environment.

1.8 Safety devices and warning signs : Sufficient attention should be paid to safety devices, warning signs and precautions described in above sections in this manual.

1.9 Driving in public places: The truck is prohibited to drive in public places except for special areas.

1.10 Space between vehicles: Remember to keep a proper distance from the vehicle ahead, since it may stop suddenly at any moment.

1.11 Passengers: Never carry or lift persons with this truck.

1.12 Operation in a lift or loading platform: If the load capacity of the lift or platform is sufficient and the space is enough for power pallet truck operation, they can be used for transportation with the permission from the power pallet truck user. The power pallet truck must be confirmed by its driver himself before entering the lift or loading platform. When entering the lift, the loads must enter ahead. And locate the power pallet truck in a suitable position to prevent from contacting walls around. If passengers take the lift together with the power pallet truck, they have to enter after the power pallet truck enters and stops firmly, and leave before the power pallet truck.

1.13 Pallet truck handling in narrow passageways and work areas: under the particular circumstances that the pallet truck has to pass through a narrow passageway, unauthorized personnel must leave the work area and heavy loads must be kept in specially prepared equipment.

1.14 Operation Management: Driving speeds must be suitable to local conditions. Always drive in lower speed when passing curved passageways, narrow passageways, rotary doors or any obstructed places. The driver should be able to measure by sight and keep enough stopping space from vehicles ahead all the time. It is prohibited to make an abrupt stop (unless in emergency), rapid U-turn and chase with each other in obstructed places. Never operate the truck with the body stretching out of it.

1.15 Visibility: The driver must keep his eyes on moving direction and have a clear view of the road ahead. In case the loads carried block sight of the driver, the truck has to be driven reversely. If this is not practical, another person should walk in front of the truck, giving corresponding guidance and warning to the driver.

1.16 Driving on slopes and ramps: when driving the pallet truck on a slope or ramp through an allowable narrow passageway, make sure that the ground is clean and antiskid. Drive safely on the slopes and ramps specified in the technical specification (Instruction manual)

of the pallet truck. Loads on the fork must face the upslope direction. U-type turning or parking on slopes or ramps are not allowed. Pass a ramp at lower speed and get ready for braking at any time.

1.17 Load capacity of the floor: Check if the weight of truck and loads or wheel pressure on the floor exceeds the load capacity of the floor.

1.18 The fork should be kept in the lowest position from the floor during non-transportation driving. Standing or sitting pallet truck. It is better to driver in reverse direction of the fork to get good vision and mobility. Driving with the fork forward may cause unpredictable mobility problems.

1.19 Load characteristic: Goods must be carried in a correct, safe and reliable way. Never carry loads piled higher than the pallet truck's top or protective devices.

1.20 Driving on loading platform or approach bridge: Before driving the truck onto loading platform or approach bridge of a truck, make sure to check load capacity of the approach bridge and if it is equipped with anti-sliding devices. The driver must also check load capacity of the truck and if there are devices to prevent the truck from moving.

1. 21 **Safe Parking:** Pay attention to safety when parking the truck. Never park the truck on a slope or on a ramp. The fork must be lowered down to the lowest position after parking. Turn off the electric lock and remove the key to prevent unauthorized operation.

Please disconnect the wires linked to batteries, if the power pallet truck will not be used for a long time before recharging,

1.22 Signalling: Warning signals can be sent by the horn on the truck.

1.23 Protection shoes: According to EU standard EN-345:1-S1, standard protective shoes must be worn when operating on the power pallet truck.

1.24 Attaching device: Attaching device or equipment that may interfere with or complement the pallet truck's functions can only be installed with the written approval of the manufacturer. If necessary, permission from local authorities shall be obtained. Revision of the attaching devices without approval may affect the stability and rated load of the pallet truck.

1.25 Truck modification: Unauthorized truck modification is not permitted. No modifications or alterations to a powered industrial truck, which may affect, for example, capacity, stability or safety requirements of the truck, shall be made without the prior written approval of the original truck manufacturer, its authorized representative, or a successor thereof. This includes changes affecting, for example braking, steering, visibility and the addition of removable attachments. When the manufacturer or its successor approve a modification or alteration, they shall also make and approve appropriate changes to capacity plate, decals, tags and operation and maintenance handbooks.

Only in the event that the truck manufacturer is no longer in business and there is no successor in the interest to the business, the user may arrange for a modification or alteration to a powered industrial truck, provided, however, that the user shall:

a) arrange for the modification or alteration to be designed, tested and implemented by an engineer(s)

expert in industrial trucks and their safety;

b) maintain a permanent record of the design, test(s) and implementation of the modification or alteration;

c) approve and make appropriate changes to the capacity plate(s), decals, tags and instruction handbook;

d) affix a permanent and readily visible label to the truck stating the manner in which the truck has been modified or altered together with the date of the modification or alteration, and the name and address of the organisation that accomplished the tasks.

Failure to comply with these instructions will invalidate the guarantee. The guarantee is also invalidated if the hand-operated scissor lift pallet trucks are exported by the customer (or a third party) illegally without the consent of Noblelift.

NOBLIFT 诺力

2. Overview of the Power Pallet Truck

2.1 Main uses and application scope

WP-LPT20/LPT22/LPT27 Power Pallet Truck is specially designed for conveying goods on flat roads.

With its compact structure, the WP-LPT20/LPT22/LPT27 Power Pallet Truck is particularly suitable for use in factories, plants wharfs and small warehouses. It can also be used for handling goods on freight wagons. Its carrying capacity is indicated on the nameplate label.

2.2 Technical features

2.2.1 Outline drawing and technical parameters

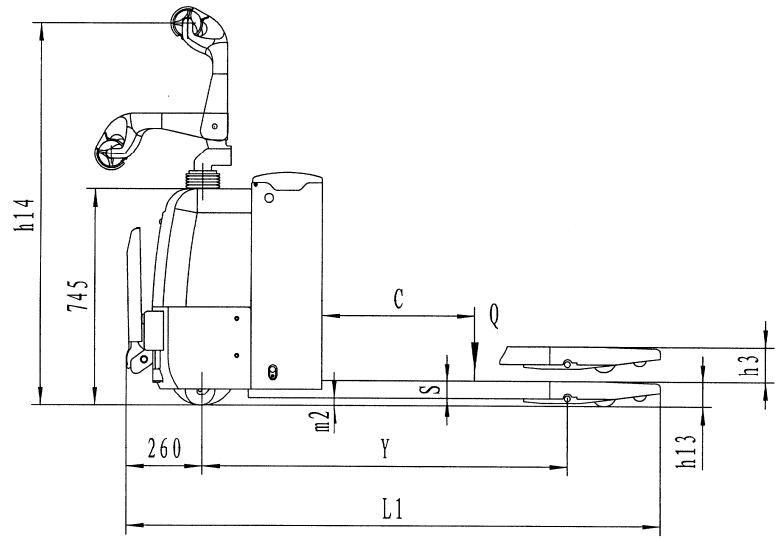

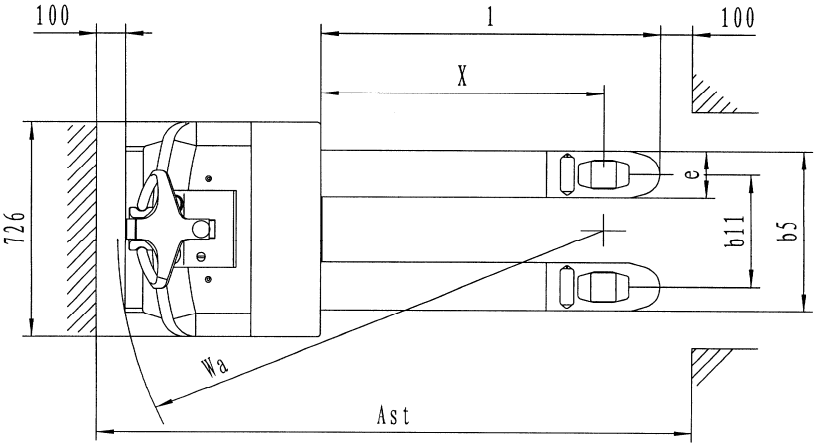

Features	1.2	Type No.		WP-LPT20	WP-LPT22AC	LPT27AC
	1.3	Power (electric, diesel, gasoline, liquefied petroleum		Electric	Electric	Electric
	1.4	Driving mode (hand, pedestrian, stand-on, sit-down, unit-pick)		Pedestrian	Pedestrian	Pedestrian
	1.5	Rated loading capacity	kg	2000	2200	2700
	1.6	Load centre distance c (mm)	mm	600	600	600
	1.8	Front overhang distance X	mm	963/1033	963/1033	938/1008
	1.9	Track Y	mm	1368	1368	1390/1460
Weight	2.1	Weight (with accumulator)	kg	520	512	560
	2.2	Axle load at full load Drive side/load side	kg	1040/1480	1082/1630	1290/1970
	2.3	Axle load without loading Drive side/load side	kg	405/115	399/113	430/130
wgeel	3.1	Tires (rubber wheels, high-performance elastomer,		polyurethane wheels	polyurethane wheels	polyurethane wheels
	3.2	Tyre size, drive side	mm	Φ230x75	Φ230x75	Φ230x75
	3.3	Tyre size, load side	mm	Φ84x70/Φ74x70*	Φ84x70/Φ74x70*	Φ74x120/Φ74x93*
	3.4	Dimension of steering wheel		Φ100x40	Φ100x40	Φ100x40
	3.5	Wheel numbers (X=driving wheel) Drive side/load		1x +2/ 2/1x +2/ 4	1x +2/ 2/1x +2/ 4	1x +2/ 2or1x +2/ 4
	3.6	Wheel track (front) Drive side b10	mm	500	500	500
	3.7	Wheel track (back) load side b11	mm	380/525	380/525	505
Dimension	4.4	Lift height h3	mm	120	120	120
	4.9	Height of lever in middle position h14	mm	1323	1323	1420
	4.15	Height of fork when being lowered h13	mm	85/75	85/75	80
	4.19	Overall length l1	mm	1815/1885	1815/1885	1770/1840
	4.20	Length of truck body l2	mm	665	665	620
	4.21	Width of truck body b1	mm	726	726	726
	4.22	Fork dimension s/e/l	mm	60/160/1150(1220)	60/160/1150(1220)	60/180/1150(1220)
	4.25	Lateral distance of fork b5	mm	540/685	540/685	560/685
	4.32	Distance from wheel base centre to ground m2	mm	25	25	20
	4.34	Right angle stacking aisle width, pallet 800X1200 (1200 placed along fork) Ast	mm	2305/2344	2305/2344	2250/2285
	4.35	Turning radius Wa	mm	1640/1710	1640/1710	1570/1640
Capability	5.1	Driving speed full load/ no load	km/h	5.0 / 5.2	5.8/6.0	4.4 / 4.6
	5.2	Lifting speed full load/ no load	mm/s	27 / 35	19/35	25/33
	5.3	Lowering speed full load/ no load	mm/s	42 / 27	30/27	40/28
	5.8	Climbing capacity full load/no load	%	10/16	9/15	8/15
	5.10	Parking brake		Electromagnetic brake	Electromagnetic brake	Electromagnetic brake
Motor	6.1	Drive motor power kw	kW	1.5	1.5(AC)	1.5(AC)
	6.2	Lift motor power kw	kW	0.8	0.8	1.5
	6.3	Accumulator, U.K. BS standard, no		3VBS	3VBS	4VBS
	6.4	Voltage of accumulator, capacity (discharge rate 5	V/Ah	24 / 210	24 / 210	24 / 280
	6.5	Accumulator weight (+/-5%)	kg	185	185	230
		Battery dimension, length X width X height	mm	645 / 196 / 570	645 / 196 / 570	645 / 244 /570
Others	8.1	Driving and control methods		FET control	FET control (AC)	FET control (AC)
	8.4	Noise heard by the driver	dB(A)	<70	<70	<70
		Turning angle	°	180	180	180

* :85mm single wheel Ø84x93,75mm single wheel Ø74x93

NOBLEFT诺力

See the technical parameter sheet for the overall dimensions and weight of the pallet truck. The weight and dimensions of parts have clear descriptions in the corresponding technical drawings.

2.2.2 Technical standard

VDI 2198 technical standard is observed.

2.2.3 EN standard

Continued noise level shall be less than 70dB (A); please refer to ISO4871 standard.

Continuous noise level is an average value of noise measured at the driver's ear during travelling, lifting and being standby.

Electromagnetic Compatibility (EMC)
The manufacturer confirms that the stacker complies with EN12895 and other relevant standards on limits of electromagnet radiation and interference, and has been tested on static discharge.
Never modify any part of electrical system without written permission from the manufacturer.

2.2.4 Operation Conditions

Ambient temperature:5℃～40℃

Particular protective measures shall be adopted on special devices during continuous operation of the pallet truck in an environment below 5℃ or under conditions of low temperature and heavy moisture.
Altitude: Below 2000m

2.3 Schematic diagram and description on various signs and nameplate locations of the pallet truck

No.	Name
15	Button mark of pallet truck's lifting
16	Button mark of pallet truck's descending
17	Button mark of horn
18	Button mark of pallet truck's advancing and retreating
19	Prohibition mark of " No sitting on the pallet truck "
20	The nameplate of pallet truck
21	Mark of lifting position

WP-LPT20/22/27

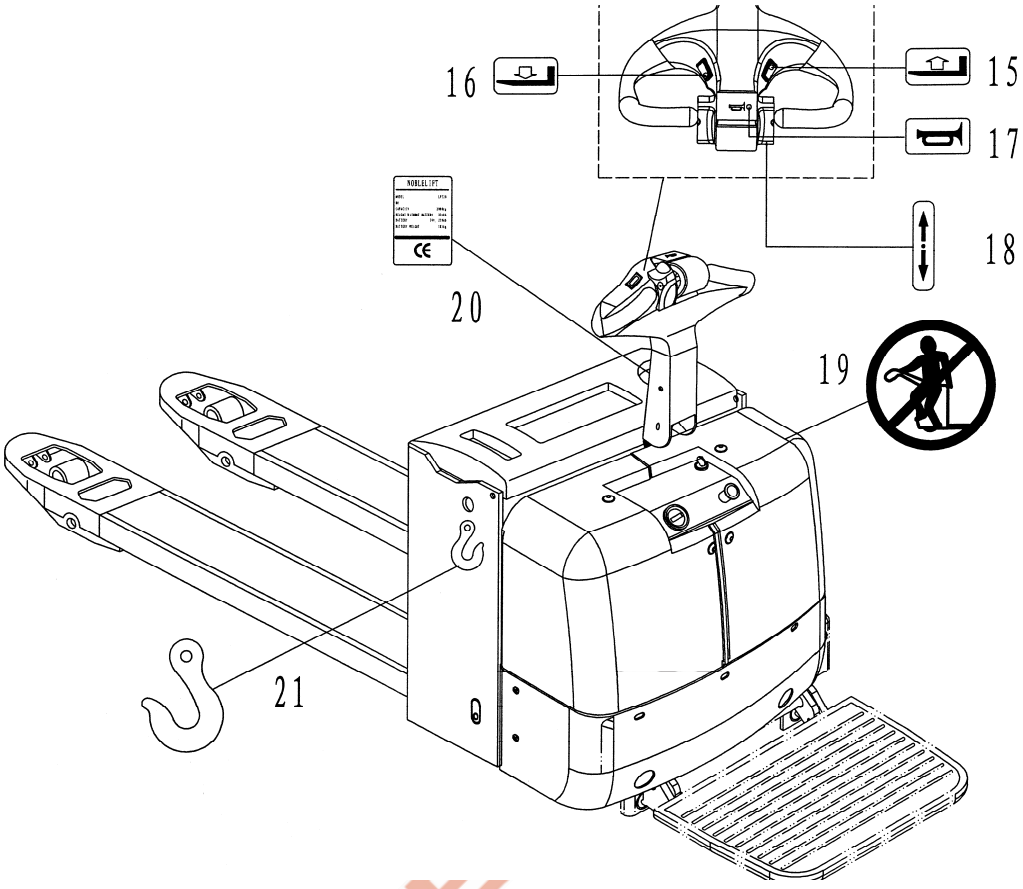

Contents on the pallet truck's nameplate shall be understood before use.

If there is quality problems with the truck or you need to order spare parts, please specify serial number of the truck and part number.

https://truckmanualshub.com/

3 Transport and Trial Run

3.1 Transport with a crane

Load capacity of the crane in use must be sufficient. The load weight equals the net weight of truck plus weight of accumulator; see nameplate plate on the truck.

The hook holes are specially designed for transport the truck.

—Park the truck in a safe position.

—Hooks of the crane must be applied at hook holes.

Hooks of the crane must be applied at hook holes, ensuring the truck will not be slipped down. During operation, make sure the crane, whose hooks must be applied at hook holes of the truck, do not contact with the truck.

3.2 Trial Run

The truck can only use accumulator as power supply. Changing to use AC power will damage the electric circuit. Cables connecting accumulator should be less than six meters.
To ensure the truck work normally after delivery and transportation, following operations have to be completed:

— Make sure all labels on the truck are complete, clear and readable. If not, replace with new labels immediately.

— Check if the completeness of all parts and components, and check if they are in compliance with requirements.

—Check the entire unit for defects and failure, especially the wheels and lifting mechanism.

— If necessary, install batteries without damaging the connection cable.

—Recharge the accumulator immediately.

If customers want to replace the accumulator with a new one, make sure that the new accumulator match with the accumulator coulombmeter (or is permitted by service technician of manufacturer).

3.3 Moving the pallet truck in case of driving device failure

When towing the truck without driving ability, release electromagnetic brake before moving.

— Press the emergency stop button, switch off power and remove the key.

- Open the front cover and remove it.
- Rotate the fixing screw on the electromagnetic brake of the driving motor anticlockwise until the electromagnetic brake comes off.

Now the pallet truck can move.

This operation is not permitted on a slope or on a ramp.

When the pallet truck stops at the destination, tighten the screw clockwise until braking function is recovered.

NOBLIFT 诺力

4 Maintenance, Recharging and Replacement of the Accumulator

4.1 Maintenance of the accumulator:

The pallet truck uses an accumulator featuring simple operation.

4.2 Charging of the accumulator

The WP-LPT20/22/27 pallet truck is equipped with fixed charger for charging. There are two kinds of chargers: built-in or external ones.

To ensure safe operation, install the accumulator shield before using the pallet truck. WP-LPT20/22/27 can be equipped with special built-out charger.

Before connecting the accumulator for charging purpose, make sure that the charger, emergency stop switch and electric lock switch are off. Perform charging in a well-ventilated place and keep away from sources of ignition. Charge idle pallet truck once a month.

Charge the pallet truck's accumulator frequently and regularly. When the "power running out" lamp lights up during operation of the pallet truck, charge it immediately.
Turn off the electric lock, remove the key and press the emergency stop button before charging,

During charging, the environment should be dry, well ventilated and away from the flames.

WP-LPT20/22/27 with external charger, the charging process is as following:

- Press the emergency stop switch so that the truck is in the off position.
- Open the battery box cover.
- Pull out the vehicle battery connector plug.
- Now, open all the water plug caps on the battery.
- Connect the output plug of the charger and battery input plug, and then turn on the battery charger switch.

If the truck or the battery stay idle for a long time, it is necessary to charge the battery at least once a month.

This truck uses an automatic smart charger. After the plug on the charger is connected with power, the charging lamp flashes red. The charger can automatically adjust current flow according to the residual capacity in the accumulator to achieve best charging state. After the accumulator is fully charged, the charging indicator flashes green and the charger automatically stops charging and turns off the power. The accumulator needs about 7-8 hours to be fully charged.

Shut the cover of the accumulator box before operating the pallet truck.

Recharge timely after power is running out, otherwise damage may be caused to the accumulator.

The batteries should be recharged in well-ventilated areas. The wartering cap of the battery for each unit must be opened. Make sure no metal objects placed on the accumulator. Check all cables connection and connectors for obvious defects. Observe strictly all safety instructions, e.g. replenishment of the accumulator and preparation for recharging.

4.2.1 Balanced Recharging

After using for a period, voltage and concentration may vary from battery to battery. Balanced recharging will eliminate the differences so that the performance of each cell becomes uniformed.

In following cases, balanced recharging is necessary: Voltage of an individual cell is frequently below 1.7V；The set of cells with heavy duty（For example: Set of cells for starter motor and lifting motor）；for accumulators that are not recharged in time after discharging: Over discharged accumulators and those are not in use for a long time.

Perform balanced recharging as follows:

A、Recharge with a current of $0.1I_5$A.

B、When the voltage up to 2.5V, and there occur bubbles in the electrolyte, continue recharging at a reduced current of 0.05I5A.

C、 Recharge the accumulator to full capacity and stop recharging for half an hour, and then continue recharging with further-reduced current of $0.025I_5$A for an hour.

D、 Stop recharging again for half an hour and continue recharging with a current of $0.025I_5$A for an hour.

E、Repeat step D until bubbles occurs intensely and instantly when switching on the charger.

Perform balanced recharging to accumulator once a month in normal use.

4.3 Capacity indicator of the accumulator

Capacity indicator of the accumulator The status of accumulator discharging is indicated on the indicator with 10 bar graphs, each bar represents 10 percent of increment.

As the consumption of accumulator capacity, the lighting bars will fall down from the top. Preset “Warning” marks will appear when remaining capacity of accumulator meets following conditions: When the remaining capacity of the standard accumulator is 30 percent,

“Warning” mark will appear and you can recharge the accumulator.

Preset “Warning” mark and a flashing “Stop” mark will appear when remaining capacity of accumulator meets following conditions: When the remaining capacity of standard accumulator is 20%, “Stop” mark will appear and keep lighting. When the “Stop” mark keeps lighting, lifting function of the truck will be cut off automatically.

Capacity sufficient

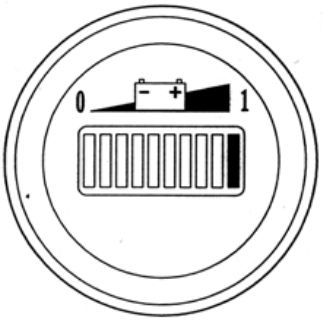

Recharging needed

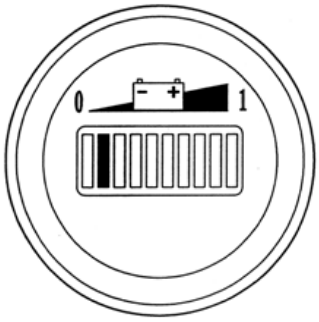

Low battery

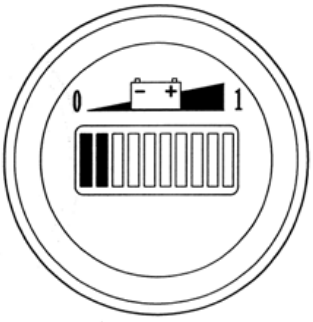

If the indicator shows low battery when lifting loads for a not very long period, lifting function can only be performed after recharging the accumulator to at least 70% of capacity.

4.4 Specifications of accumulator and charger

Accumulator		Charger	
Rated Voltage（V）: 24	Rated Capacity (Ah)：210	Input：AC115/230V 50/60Hz	Output:DC24V/30A
Rated Voltage（V）: 24	Rated Capacity (Ah)：280	Input：AC115/230V 50/60Hz	Output:DC24V/40A

5 Operation

5.1 Schematic diagram of the Noblift lever

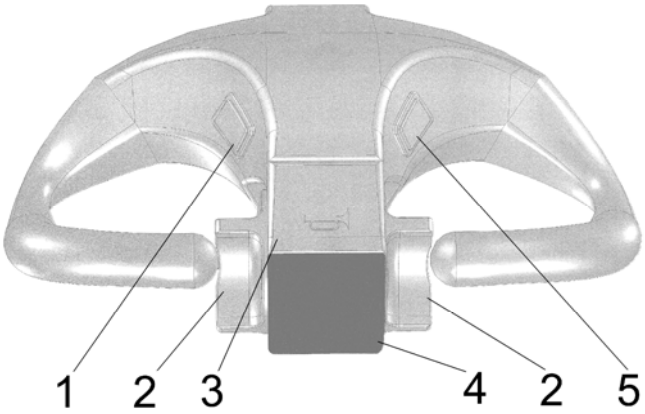

1. **Down Switch**
2. **Forward/Backward**
3. **Horn Button**
4. **Reverse Button**
5. **Up Switch**

5.2 Schematic diagram of the REMA-CAN

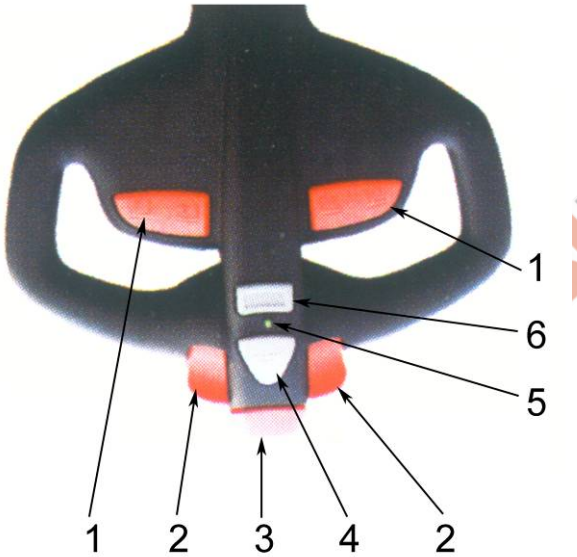

1. **Up/down switch: Moving the fork upward or downward**
2. **Forward/Backward button:** Control speed and direction of the truck, forward or backward
3. **Reverse button:** Emergency reverse button.
4. **Horn switch**
5. **Indicator:** Indicates speed of the truck
6. **High/Low speed Switch button:** Press the switch gently for low speed function. When it is pressed first time, the speed is lowered and the indicator glows red, indicating low speed mode. When it is pressed again, the truck returns to high speed mode, and the indicator glows green.

5.3 Starting-up the truck

It has certain risks to use the truck in rainy, snowy, foggy and windy weather. Before use in those conditions, please evaluate the security.

The driver should always make sure that no person stayed in dangerous area of the

truck before starting up and operating the unit or lifting loads.

Check before daily start-up

—Check the entire unit for defects and failure, especially the wheels and lifting mechanism.

— Check if the accumulator is firmly fixed and well-connected.

Starting-up the truck

— Rotate and turn on the emergency stop switch.

— Insert the key in electric lock and turn it clockwise to position “I”.

— The coulombmeter shows current battery level.

— Check the horn.

— Check braking function of the control lever.

It has certain risks to use the truck in rainy, snowy, foggy and windy weather. Before use in those conditions, please evaluate the security.

Now the preparation before starting-up is completed.

5.4 Operation of the truck

5.4.1 Starting-up, Driving and Parking

Be careful during starting up and driving, especially when part of your body stretches out of truck’s outlines.

Do not carry any other person during driving.

Emergency Stop

Pressing the emergency stop switch will stop all electric control functions.

Forced Braking

When the control handle is released, the truck will brake automatically (emergently stop). The control handle will enter the upper braking range (B1) automatically.

If the lever enters braking range slowly, make sure to find out its causes and troubleshooting the failure. If necessary, replace the air spring of the handle.

Starting up

Start up the truck only when the battery cover is closed.

—Starting-up the truck.

Adjust driving speed by rotating the “forward/backward button”.

—Rotate the control lever to driving range “F”, and adjust the control lever in required direction, the truck will move towards selected direction.

Driving

Swing the control handle rightward or leftward to drive.

When the operator faces the pallet truck's moving direction while the loads are against the moving direction, turn the lever clockwise to make a clockwise turning.

When the truck comes across an obstacle, the force applied to swing the lever should be smaller than driving in normal status. In such case, turn the steering wheel / arm carefully to break away from the obstacle by moving forward or backward.

Driving on a slope

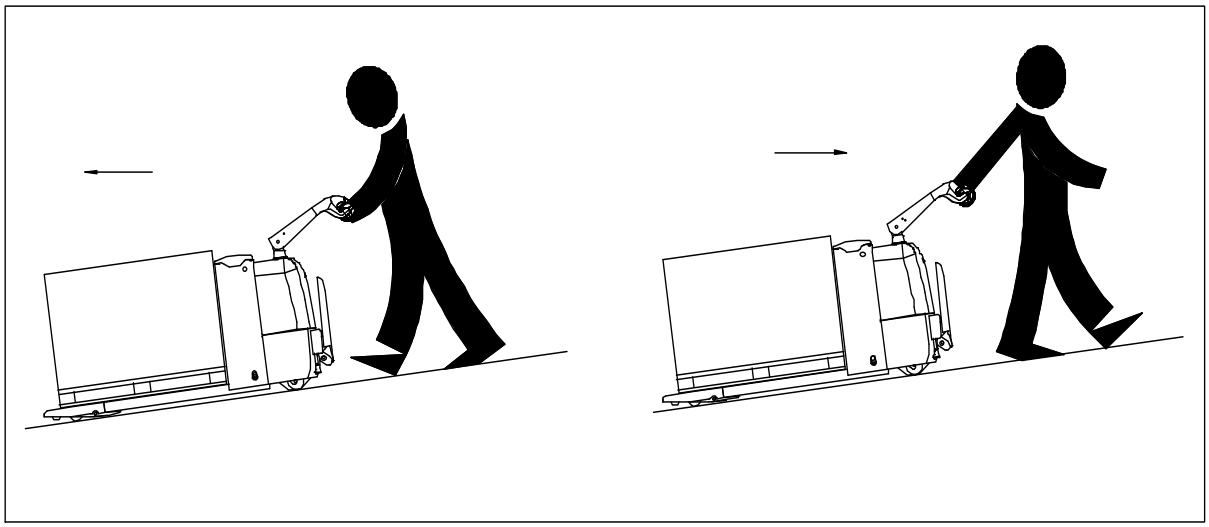

Always keep loads face the downward slope when transport loads on a slope.

Take following safety measures against the rolling down: With the control button in position "0", quickly press the handle backward. The driver should release the handle as required to make the electromagnetic brake work automatically, controlling the speed and direction (if the driver find the truck is rolling down).

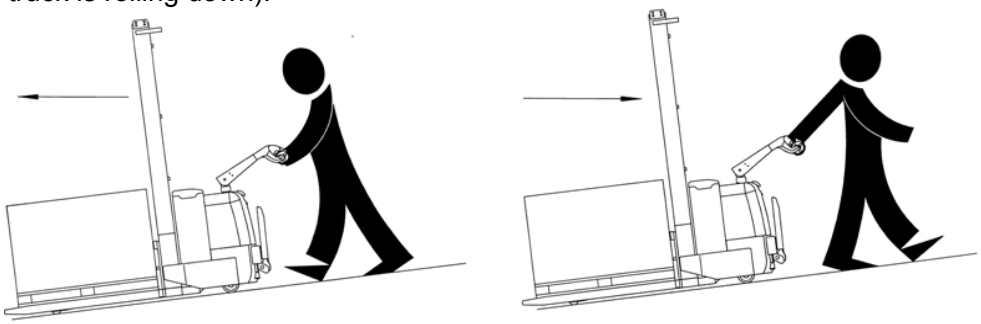

STOP In case the truck is rolling over, the operator should get away from the truck right away.

Braking

The braking performance of the truck depends on floor condition. The driver must be clear about this point.

Three braking methods are available:

— Electromagnetic brake (control handle)

— Use reverse current brake (from the controller)

— Brake with the sensor (i.e. release the lever to brake)

Braking with the Electromagnetic Brake

In case of an emergency, always stop the truck only with electromagnetic brake (control lever).

—Turn up or down the control handle to braking range B1 or B2, the drive motor will be stopped mechanically.

When the control handle is released, it will enter the upper braking range (B1) automatically. After the truck is stopped, the electromagnetic brake works as parking brake.

Braking with reverse current brake

If the control system or driving power fails, braking with reverse current is possible.

— Turn controller in reversed direction of driving until the truck stops.

— Release the controller.

Braking by the inertia

— When the controller is released, it returns to position “0”, and brakes by inertia of the motor.

The slowing down rate depends on the position of controller.

If the controller position is set to ‘0’ and the inertia braking unit is removed by service technician, you have to use electromagnetic brake or reverse current brake to brake the truck.

5.4.2 Operation of lifting and lowering loads

Before lifting loads, the driver must check if the loads are placed on the pallet completely and the weight of loads does not exceed the loading capacity. Do not transport in full load status for a long time.

— Make sure the fork reach under the loads as far as possible.

When operate with “Up” or “Down” button, the fork will move upward or downward at a fixed speed.

Lifting of the fork

— Press the “Up Switch” until the fork arrives at required height.

Lowering of the Fork

— Press “Down Switch” until the fork is lowered to required height.

Safe Parking

Pay attention to safety when parking the truck. Never park the truck on a slope or on a ramp. The fork must to be lowered to its lowest position after parking.

— Lower the fork.

— Turn electric lock from position “1” to “0” and remove the key.

NOBLIFT 诺力

6 Maintenance of the pallet truck

6.1 Safety operation and environment protection

The checking and maintenance work described in this chapter should be executed according to the time intervals in the maintenance list.

Never modify any parts, especially safety devices of the truck without permission. Never change the operation speeds of the truck. All spare parts provided by original manufacturer are strictly tested. Only use spare parts from the manufacturer for the guarantee of the safety and reliability of truck operation. The replaced material including oil should be collected and disposed of according to local environment protection and health regulations.

6.2 Safety rules applicable to the maintenance of the pallet truck

Maintenance technician: The maintenance and service should only be performed by special personnel trained by the manufacturer. After the technician sent by after-sales department of the manufacturer completed maintenance and servicing work, they should sign on the service log.

Lifting of the truck: When the truck needs to be raised up for repair, the lifting device must be safe and reliable, and must be strictly fixed to hook holes. When the truck is raised up, proper measures such as using wedges and wooden blocks must be applied to prevent the truck from sliding down or tilting over.
Only when the fork is fixed and connected with strong enough ropes can a hoisting device be used for lifting.

Cleaning Operation: Flammable liquid can not be used for cleaning the truck. Before cleaning, take safety precautions to prevent electric sparks (e.g. sparks caused by short circuit). When operating the accumulator, connectors on it must be disconnected. Use soft air suction or compressed air, non-conductive and anti-static brushes to clean electric and electronic components.

If you are going to use water spray or high pressure cleaner to clean the truck, all electric and electronic components must be covered carefully in advance because moisture may cause them malfunction. Never use steam nozzles for cleaning.

Operation of Electric System: Operation on the electric system should only be performed by specially trained personnel. Before performing any operation on the electric system, precautions must be made to prevent electric shock. When operating the accumulator, connectors on it must be disconnected.
Traction motor and hoist motor are types of short-term duty. Traction motor: S2 60min, Hoist motor: S3 15%.

Welding Operation: To prevent electric components from being damaged, remove these electric components before welding.

Installation: When repairing or replacing hydraulic components, electric and electronic

components, make sure to install them back to their original positions.

Wheels: Quality of the wheels has significant effect on stability and driving performance of the truck. Modification on wheels can be performed only with the approval from the manufacturer. When replacing wheels, ensure that the truck is levelled as delivery state (wheels must be replaced in pairs, i.e. replace right wheel together with left one).

During the use of the steering wheels, in case that the handle can be tightened or the two wheels will be not parallel. Please take off the steering wheels, and add proper adjusting washer(Item code: 1000404031，1000404032). In this way, the truck can recover for use.

Lifting chain: It will soon wear out without lubrication oil. The time interval in the maintenance manual is applicable to normal use. In bad operating condition (dust, temperature), lubrication oil is needed frequently.

Hydraulic tubing: tubing must be replaced once every six years. Change tubing of hydraulic system when replacing hydraulic components.

6.3 Maintenance and checking

It is very important for safe operation of the truck to perform overall professional maintenance. Failure in performing maintenance according to specified interval may cause malfunction of the truck, and potential risk to human and equipment.

Maintenance periods listed in this manual apply to single shift a day under normal operation conditions. If using in dusty environment, the ambient temperature varies remarkably or in multi-shift situation, the maintenance period has to be shortened.

Maintain the truck according to following maintenance list. Maintenance periods are as follows:

W1 = Every 50 work hours, but at least once a week.

M3 = Every 500 work hours, but at least once every three months

M6 = Every 1000 work hours, but at least once every six months

M12 = Every 2000 work hours, but at least once every 12 months

Additional operations should be performed in trial run period:

(In initial 50 – 100 working hours or after two months)

— Check the nuts on the wheels, and tighten them if necessary.

— Check the hydraulic components for leakage, and tighten them if necessary.

—Replace the hydraulic filter.

6.4 Maintenance list of WP-LPT20/22/27

			Time interval of maintenance			
			Standard =●	W	M	M	M
			Cooling storage =#	1	3	6	12
Chassis & Main frame	1.1	Check all bearing parts for damages			●		
	1.2	Check all bolt connections			●		
Driver:	2.1	Check the drive system for noise and leakage			●		
	2.2	Check oil level in drive system			●		
	2.3	Replace lubricant oil				#	●
Wheels:	3.1	Check for wear and tear			●		
	3.2	Check the bearings and make sure they fit well with the wheels a）			●		
Steering system	4.1	Check the steering control			●		
Braking system	5.1	Check the performance and adjust accordingly		#	●		
	5.2	Check reset function of the air spring, and check for leakage and damages			●		
	5.3	Check the brake disk for wear			●		
	5.4	Check the connection of brake and adjust if necessary			●		
Lifting Mechanism	6.1	Check performance and wear, and adjust accordingly			●		
	6.2	Visually inspect the loading wheels for blockage			●		
	6.3	Check fork tips and pallet support for wear and damages		#	●		
Hydraulic system	7.1	Check performance		#	●		
	7.2	Check all connections for leakage and damages b）		#	●		
	7.3	Check the cylinder for leakage and damages and if the accessories are safe and secure		#	●		
	7.4	Check the oil level.		#	●		
	7.5	Replace hydraulic oil and the filter element d）				#	●
	7.6	Check the pressure regulator valve				#	●
Electric system	8.1	Check performance			●		
	8.2	Check all cable connections for safety, reliability and damages			●		
	8.3	Check if the amperage of fuses is proper					
	8.4	Check if the switches and release cam mechanism is secure and functions properly			●		
	8.5	Check the connectors and replace worn parts if					

		necessary				
	8.6	Check the warning device	#	●		
Motor	9.1	Check the carbon brush for wear		●		
	9.2	Check safety of additional devices of motor		●		
	9.3	Use a vacuum to clean motor frame. Check the commutator for wear		#	●	
Accumulator	10.1	Check the density of acid liquid, capacity and voltage of the accumulator	#	●		
	10.2	Check the safety devices on terminals and the grease	#	●		
	10.3	Clean the connector of accumulator and check the connection.	#	●		
	10.4	Check the cable for damages, replace if necessary		●		
Lubricant oil	11.1	Grease the truck according to time table for filling up lubricant	#	●		
General Test	12.1	Check the grounding connection of electric system				●
	12.2	Check the travelling speed and braking distance				●
	12.3	Check the lifting and lowering speed				●
	12.4	Check the safety device and switch off devices		●		
Trial	13.1	Perform trial run under rated load		●		
	13.2	The truck is proved to be safe and reliable to personnel after completion of above maintenance	#	●		

a) After about initial 100 working hours, check the nuts of wheels, tighten them if necessary.
b) After about initial 100 working hours, check the hydraulic system connections for leakage and tighten it if necessary.
c) After initial 500 working hours.

6.5 Instruction on maintenance and repair

6.5.1 Preparing the pallet truck for maintenance and repair.

To prevent possible accidents during maintenance and repair work, following preparations must be done:

— Park the truck safely.

— Press the emergency stop switch and disconnect the connectors on accumulator.

When operating after fork is rising or pallet truck is lifted, the operator shall adopt measures to prevent falling over or sliding down of the fork and pallet truck. For information on lifting of the truck, see related parts in “Transportation and Trial Run” above.

6.5.2 Open the left and right covers.

— Park safely

— Press the emergency stop button and loosen four screws (2) and (10); see the chapter "Transportation and trial running".

— Remove the left and right covers (1) and (3); put them near the pallet truck.

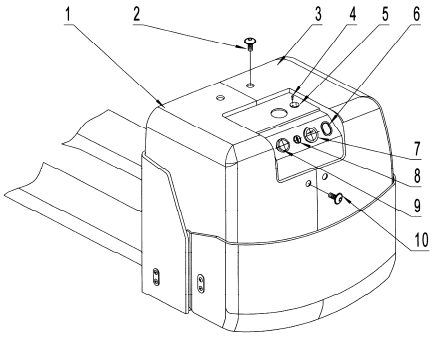

Install in a reverse order.

6.5.3 Check hydraulic oil level

— Get the truck ready for maintenance or repairing.
— Open the left and right covers (1) and (3).
—Check hydraulic oil level in oil tank.

Check the hydraulic oil level only after the fork and main frame are lowered to their lowest position.

6.5.4 Check electrical fuse

— Get the pallet truck ready for maintenance and repairing.
— Open the left and right covers (1) and (3).
— Consult the sheet and check whether all the fuses have appropriate rated current. Change fuses if necessary.

Name	Protective effect	Data(LPT20)	Name	Protective effect	Data(LPT22)	Data(LPT27)
FU01	Traction fuse	130A	FU01	Hoist fuse	80A	150A
FU02	Hoist fuse	80A	FU02	Traction fuse	150A	150A
FU1	Control circuit fuse	10A	FU	Control circuit fuse	10A	10A
FU2	Lifting control fuse	6A				

NOBLE 诺力

6.5.5 Use Preparation after maintenance or repairing

Use the truck only after following operations have been completed.

— Clean the truck.
— Check the brake.
— Check the emergency stop switch.
— Check the horn.

6.6 Storage of the truck

If the pallet truck has been in storage for more than two months, park it in a dry and anti-freezing place. Before that, take all the required actions. The following measures shall be adopted during and after storage.

During storing, the truck should better be placed with the wheels off the ground for protecting the wheels and the bearings within wheels.

If the storage time is over six months, please consult the manufacturer on additional

protection measures.

6.6.1 Operations before storing

— Clean the truck thoroughly.
— Check the brake.
— Check the hydraulic oil level, refill if necessary.
— Apply lubricant oil or grease to protect all parts.
— Refill grease according to detailed lubrication cycle table.
— Recharge the accumulator again.
— Disconnect and clean the accumulator. Apply grease on terminal poles on accumulator.

Besides these, the accumulator must be protected according to special requirements stated in accumulator instruction manual.

6.6.2 Cautions during storage

Every one month: Recharge the accumulator.

Operations related to accumulator

It is very important to recharge the accumulator periodically. Otherwise, the accumulator will self discharge, resulting complete loss of capacity and the accumulator may become worn-out thoroughly.

6.6.3 Trial Run Again

— Clean the truck thoroughly.
— Refill grease according to lubrication cycle table.
— Clean the accumulator, apply pole lubricant on the terminal poles and reconnect the connectors.
— Recharge the accumulator again.
— Check if there is moisture in hydraulic oil. If so, replace hydraulic oil.
— Start up the truck.

If the switches in electric system do not contact well, clean all exposed connectors with contact detergent spray, and repeat this operation to remove oxide layer on these connectors.

STOP Perform several electromagnetic brake tests immediately after trial run again.

6.6.4 Determination of faults

This chapter provides a guide to users on finding out and solving simple faults of the pallet truck. The following table introduces faults determination and solving methods.

Fault	Cause	Countermeasures
The pallet truck can not move	- Connectors on accumulator are not connected - Electric lock is in position “0” - Emergency stop switch is not turned on. - The accumulator capacity is used up - The control lever is not in drive range F - The fuse is blown	- Check the connectors on the accumulator, connect them if necessary - Turn the Electric lock in position 1 - Turn on the emergency stop switch. - Check the capacity of the accumulator, recharge if necessary - Turn the control lever to drive range F Check the fuses LPT20：FU01 and FU1；LPT22/27：FU02 and FU
Loads can not be lifted up	- The truck is not operating - Low hydraulic oil level - The fuse is blown -The accumulator has only 20/30% of capacity - The UP switch is in bad contact or damaged.	- Do as methods in “The pallet truck can not move” table. - Check hydraulic oil - check the fuse LPT20：FU02 and FU2；LPT22/27：FU01 - Recharge the accumulator. - Check UP switch and replace if necessary.
Loads can not be lowered down	- Dirty oil blocks control valve. -The solenoid valve for lowering is not opened or is damaged	- Check hydraulic oil and clean control valve. Replace the oil if necessary. - Check or replace the valve for lowering
It can not stop when lifting up	- The UP switch is damaged.	- Disconnect power supply and replace the UP switch
Moving in one direction	-The micro-switch and the connecting cable are not well-contacted.	- Check the micro-switch in control lever and the connecting cable.
The truck travels very slowly.	- The accumulator capacity is insufficient; or the electromagnetic brake is tight; or the related cables are not well-contacted.	- Check the capacity indicator, the brake and related cables.
The truck starts up suddenly	- The controller is damaged. - The button controlling backward or forward is not reset.	- Replace the controller. - Reset through repair or replace it.

NOBLET 诺力

If above steps still can not solve the problems, please contact the after-sales service department of the manufacturer and have the problems solved by specially trained technicians.

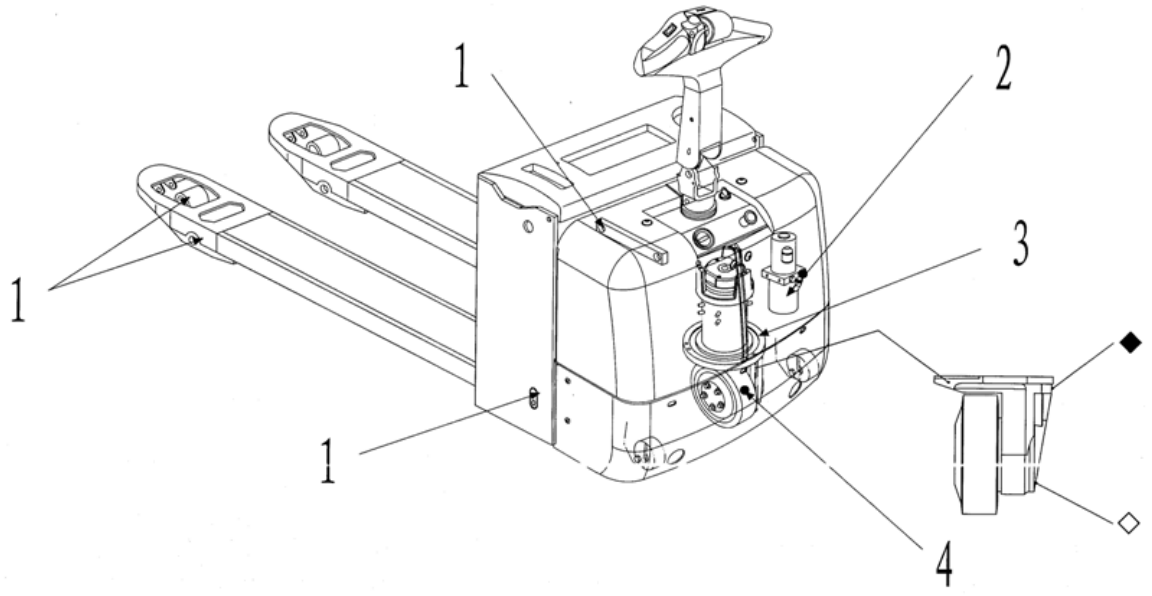

6. 6. 5 **Oil and lubricant**

◆= **oilfillingopening** ◇= **oil drain hole**

Lubrication Cycle Table

No.	Refill point	Lubrication Cycle 500 h	1000 h	2000h	
1	Bush connecting wheel bearing, arm force block and push rod	L			A
2	Hydraulic system	C		O	B
3	pivoting support		L		C
4	Gear box	C		O	D

L=Lubricating C=Checking O=Replacing

Description tables of oil and lubricant

Lubricant type		Lubricant Name ＞-15℃	＜-15℃	Lubricated area
A	Lubricant grease	2# Grease	2# Grease	Bearings, sleeves, joints
B	Hydraulic Oil	40# Hydraulic Oil	30# Hydraulic Oil	Hydraulic system
C	Lubricant grease	2# Grease	2# Grease	Bearing for pivoting support
D	Gear oil	W85-90 Gear oil	W85-90 Gear oil	Gear box

NOBUFT 诺力

7 Schematic Diagrams of Electric and Hydraulic System for WP-LPT20/LPT22/LPT27

7.1 WP-LPT20 circuit diagram (Noblelift Handle)

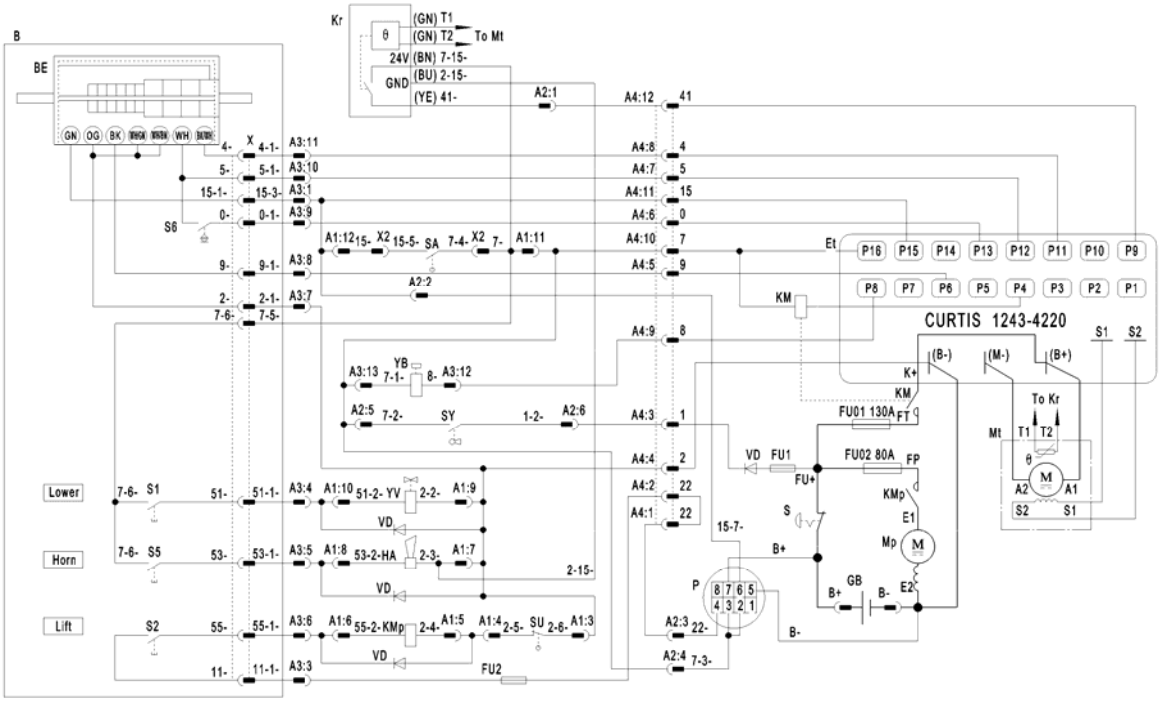

7.2 WP-LPT20 circuit diagram (REMA-CAN handle)

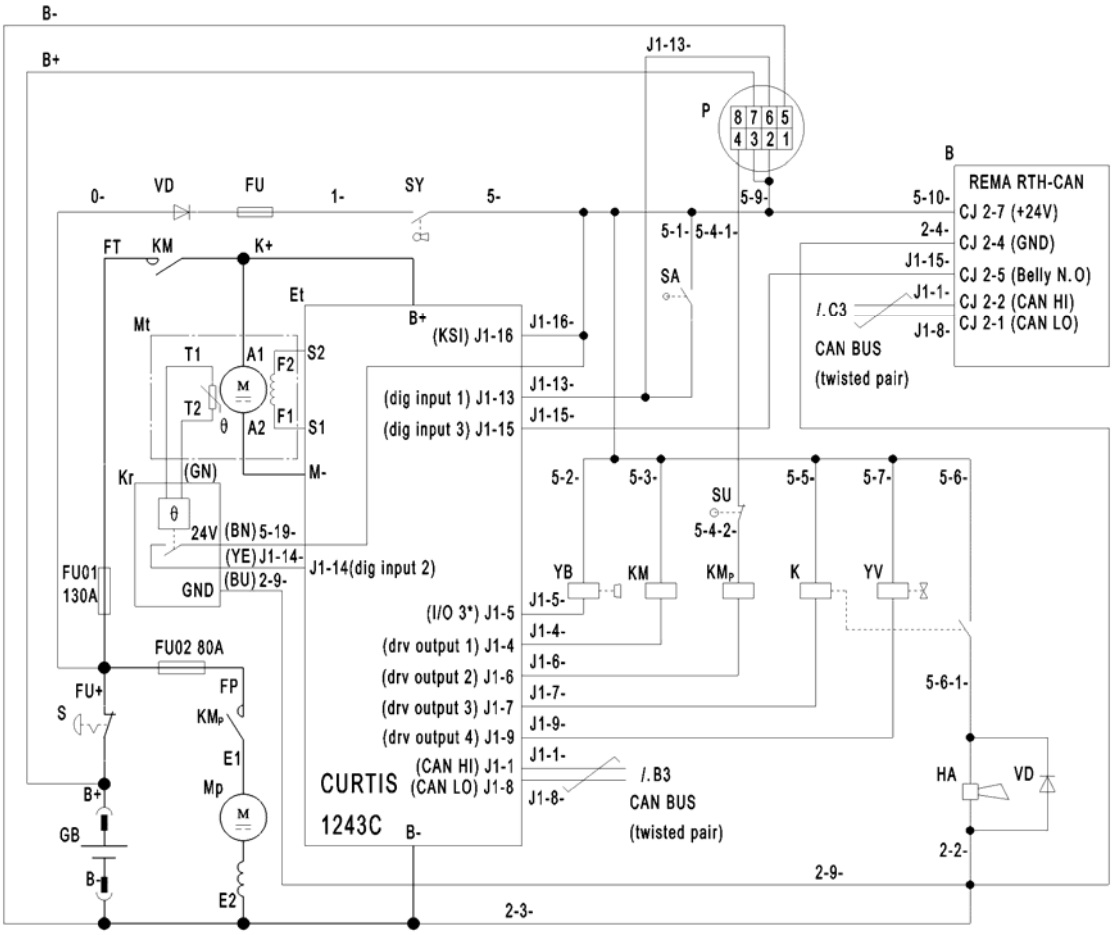

7.3 WP-LPT20 wiring diagram (Noblelift Handle)

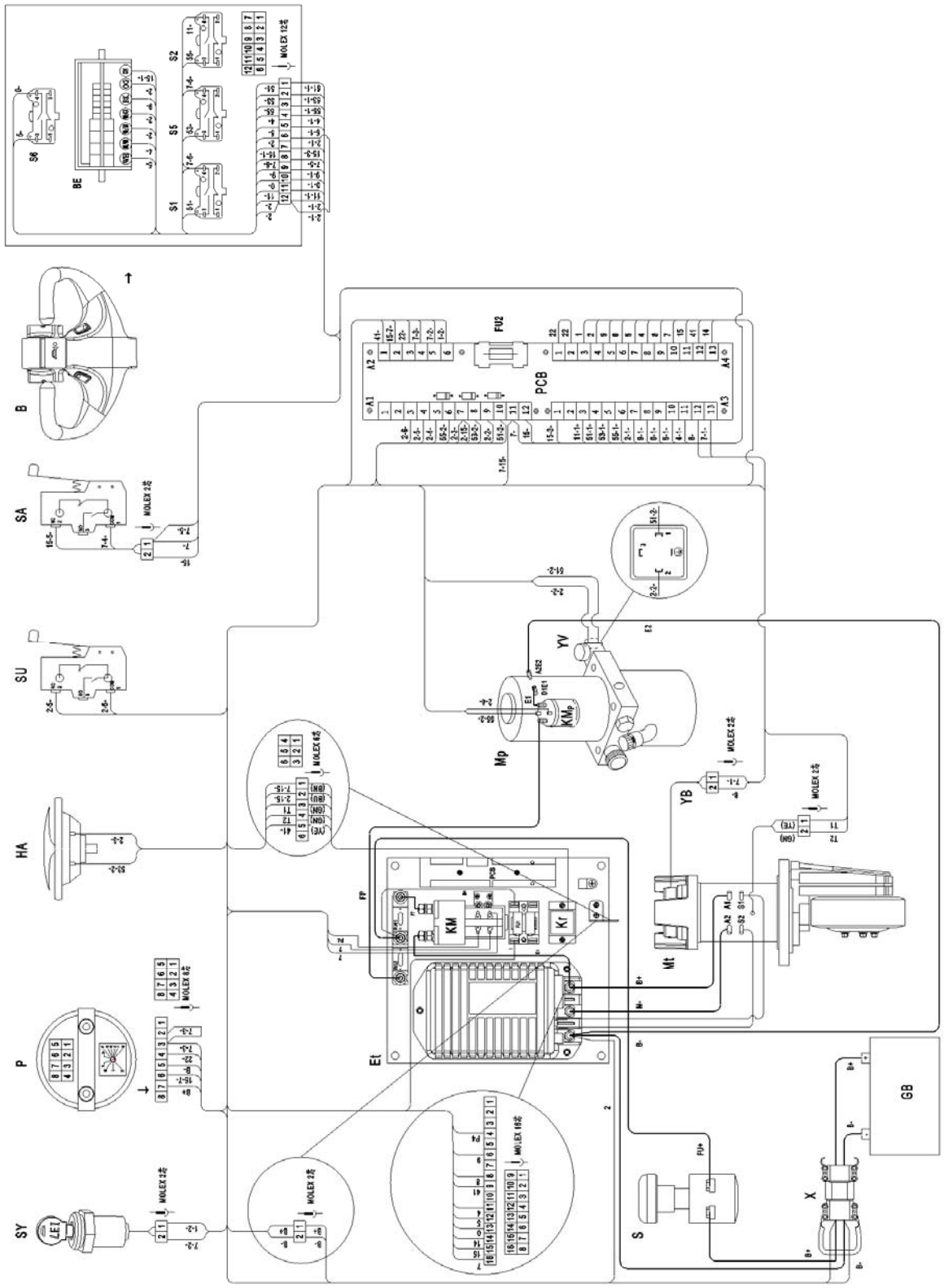

7.4WP-LPT20 wiring diagram (REMA-CAN Handle)

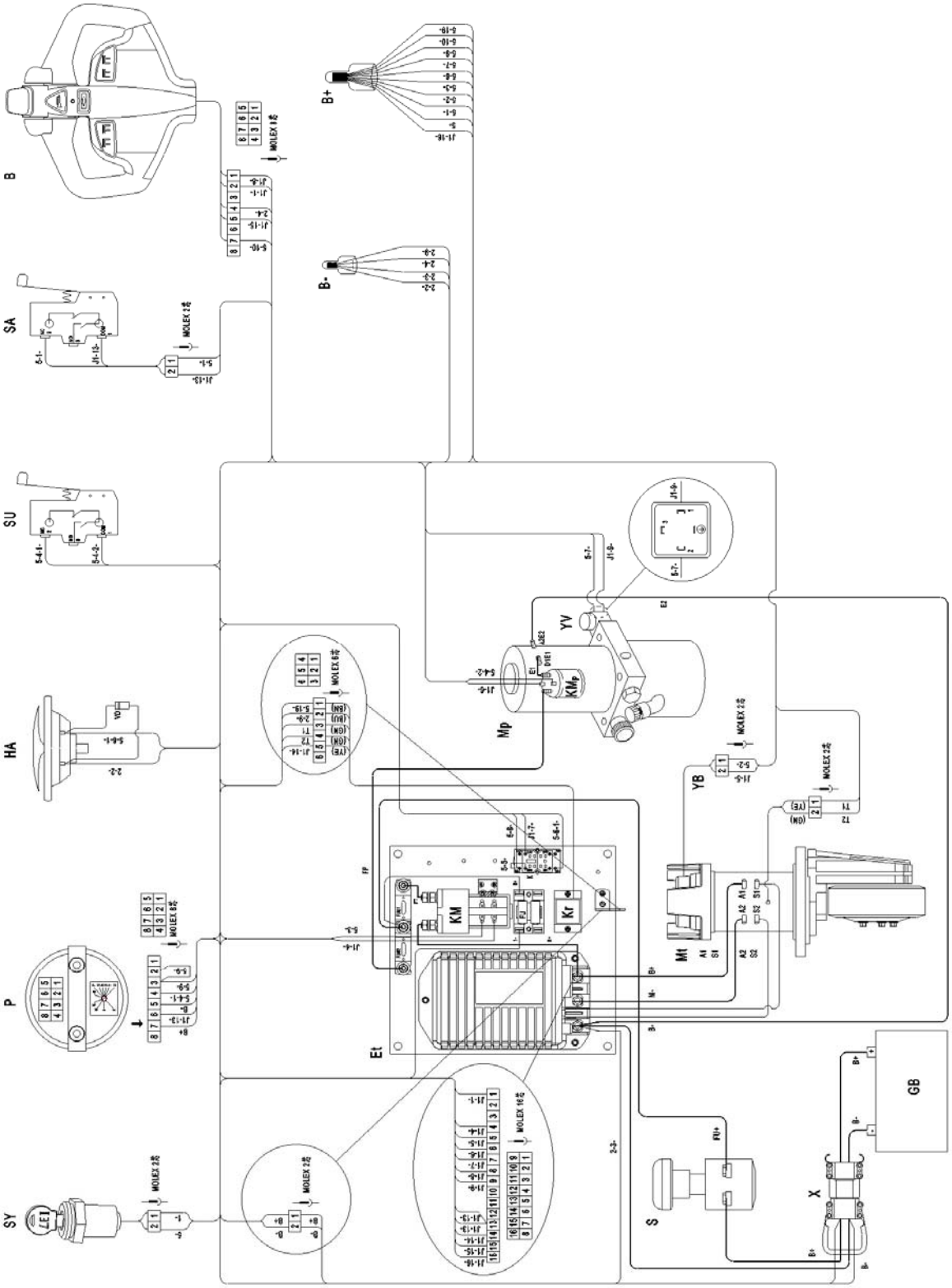

Names of electrical components of WP-LPT20 are listed in the following sheet:

No	Code No.	Name	No	Code No.	Name
1	GB	Accumulator	12	BE	Accelerator
2	B+	Positive pole of accumulator.	13	YV	Lowering solenoid valve
3	B-	Negative pole of accumulator.	14	HA	Horn
4	Mp	Pump motor	15	Et	Controller
5	FU01,FU02,FU1,FU2,FU	Fuse	16	VD	Diode
6	B	Handle	17	S	Emergency stop switch
7	Mt	Traction motor	18	KM	Main contactor
8	SA	Interlock switch	19	SY	Key switch
9	YB	Electromagnetic brake	20	SU	Lifting limit switch
10	P	Capacity indicator	21	K	Relay
11	KMp	Lifting contactor	22	Kr	Protection module

NOBLIFT 诺力

7.5 WP-LPT22 circuit diagram (Noblelift Handle):

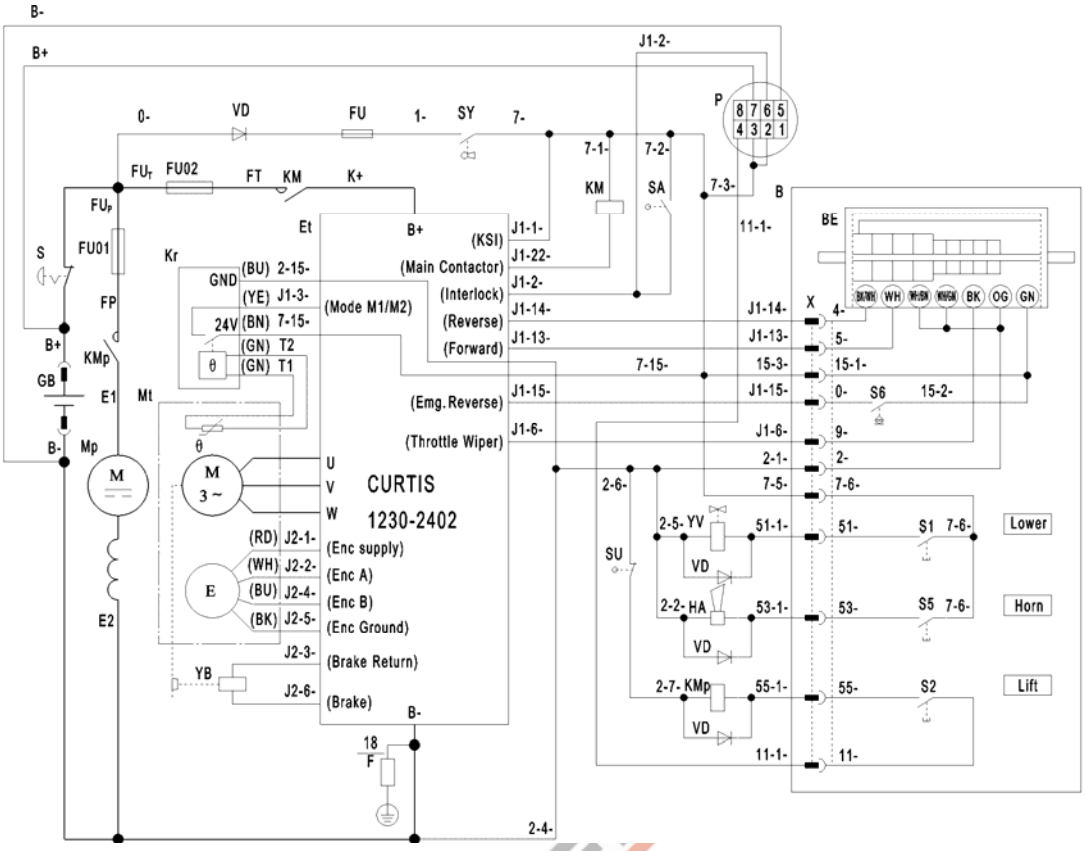

7.6WP-LPT22/LPT27 circuit diagram (REMA-CAN handle):

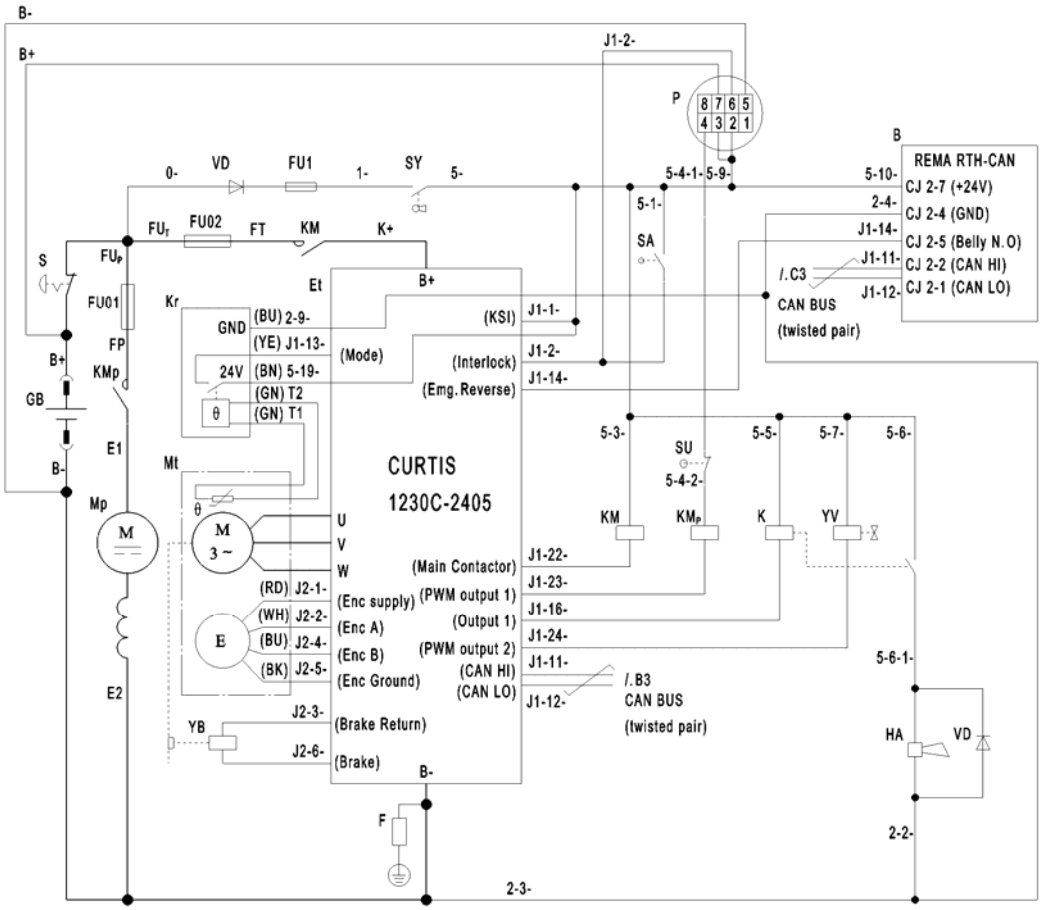

7.7 WP-LPT22 wiring diagram (Noblelift Handle):

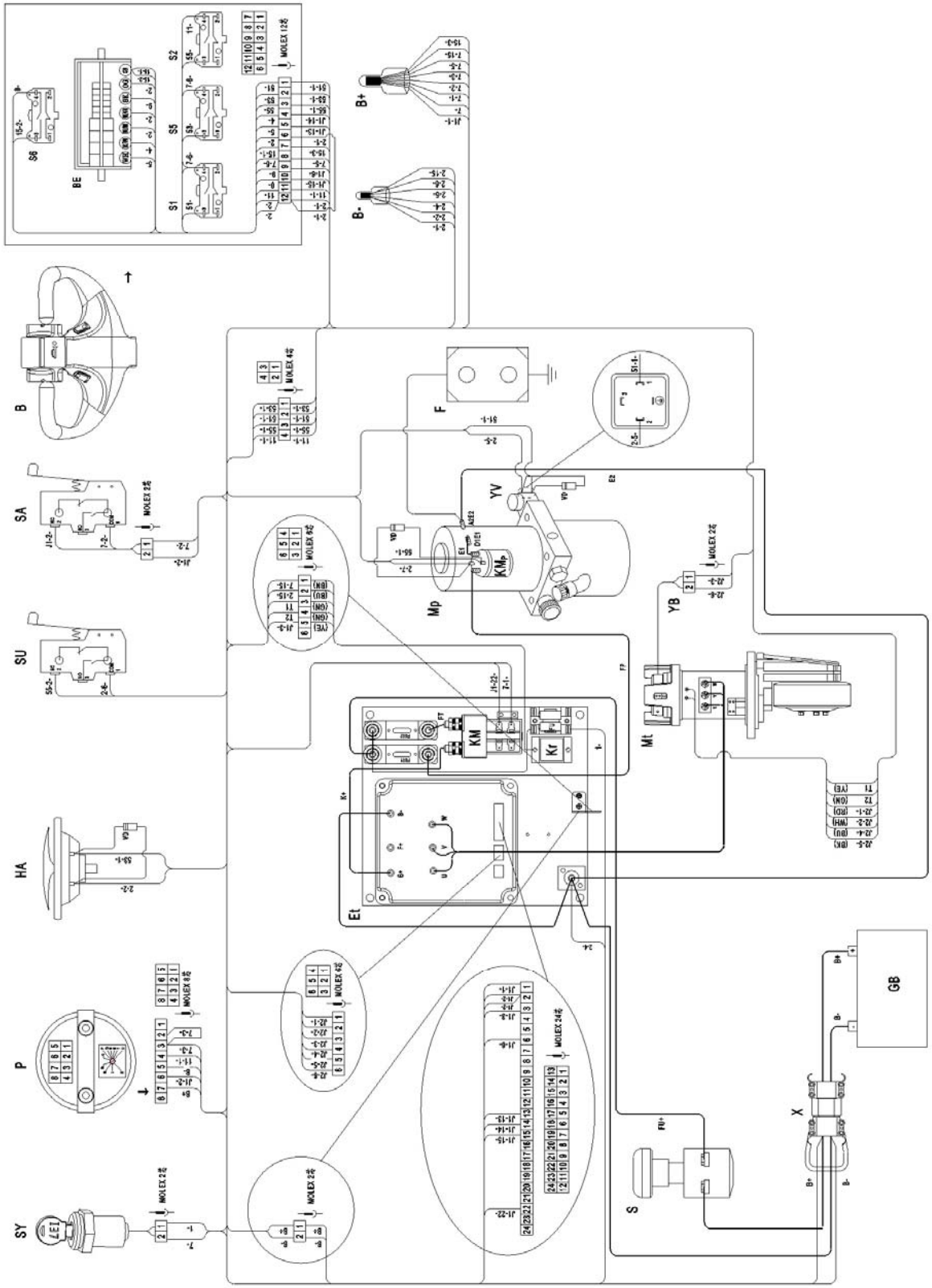

7.8 WP-LPT22/LPT27 wiring diagram (REMA-CAN handle):

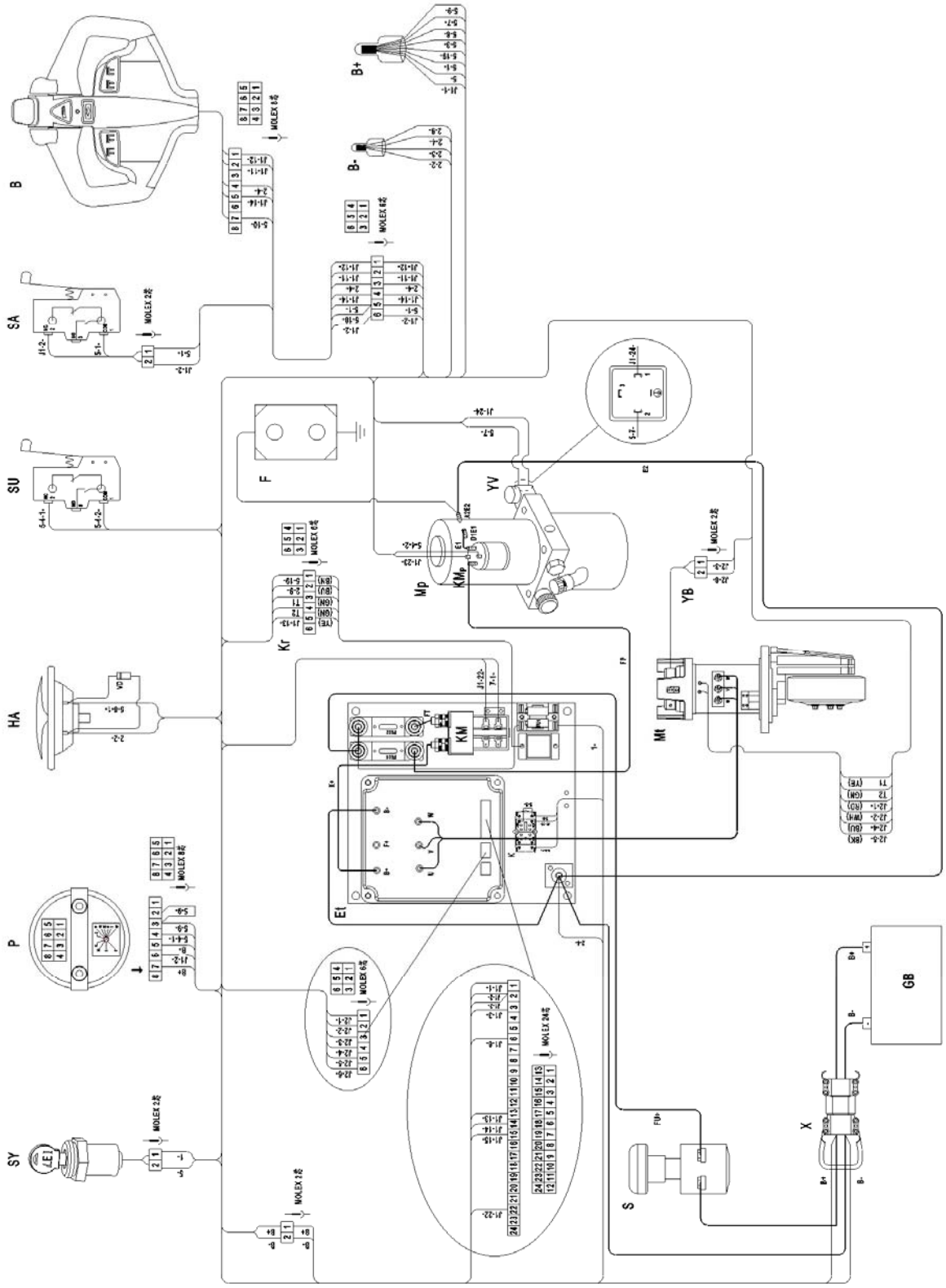

Names of electrical components of WP-LPT22/LPT27 are listed in the following sheet:

No	Code No.	Name	No	Code No.	Name
1	GB	Accumulator	12	YV	Lowering solenoid valve
2	B+	Positive pole of accumulator.	13	HA	Horn
3	B-	Negative pole of accumulator.	14	Et	Controller
4	Mp	Pump motor	15	VD	Diode
5	FU01,FU02,FU	Fuse	16	S	Emergency stop switch
6	B	Handle	17	KM	Main Contactor
7	Mt	Traction motor	18	SY	Key switch
8	SA	Interlock switch	19	SU	Lifting limit switch
9	YB	Electromagnetic brake	20	K	Horn Relay
10	P	Capacity indicator	21	F	Module
11	KMp	Lifting contactor	22	Kr	Protection module
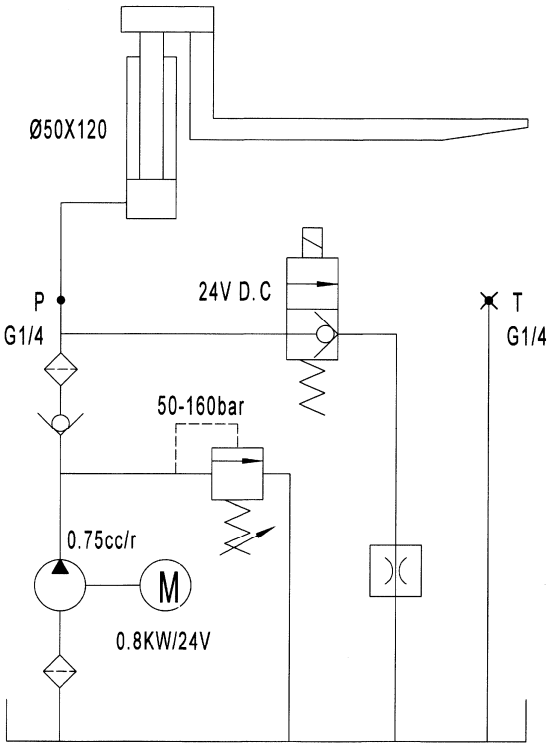
7.9 LPT20/22/27 Hydraulic Diagram