https://truckmanualshub.com/

Parts Catalogue

Model :T574 T494 ST/NC

TYM 동양물산 기계사업부

Printed : 2018 Version : A
Part number of this book: 1386 950 001 0

https://truckmanualshub.com/

Important tips of Parts Catalogue

We thank you for your purchasing our product, manufactured under strict quality control, by gathering plenty of experiences and new technology, designed for a comport and pleasant work.

1. Part Composition

This catalogue deals with engine and chassis.

Detailed classifications are listed in the following page.

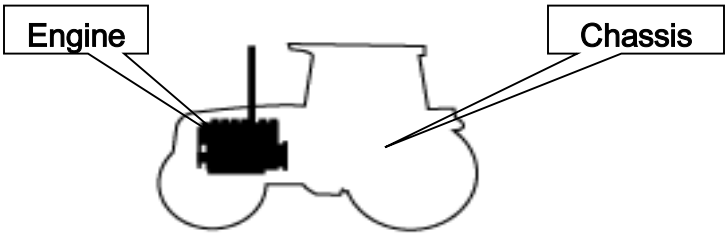

2.For locating parts easily,Please Note:

If you know the assembly where the part is used.

-Refer to the relevant figure from the identifying group symbol illustration,

-Locate the relevant chapter

-Refer to the particular chapter desired.

3. For ordering parts

To obtain spare parts please contact your nearest dealer and give him the details listed below.

①Tractor Model : Tractor T554

②Tractor Serial Number : H00001

③Part Number : 17461039100

④Description : AIR CLEANER ASSY

⑤Quantity required: 1

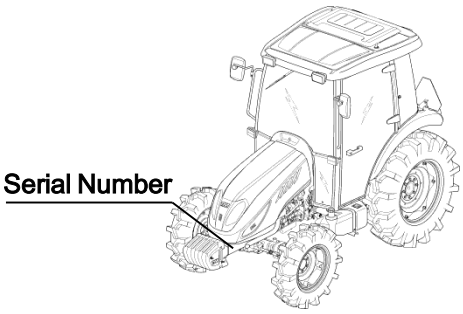

4. For ordering PARTS CATALOGUE

This is Priced item and one is to order the same on part No. 1746 950 001 0

This supersedes all our editions.

Note)When replacing parts, please use original spare parts to be sure of the performance and the longer life of the product

※The information in this catalogue may at any time be modified without a prior notice for the improvement of performance, please consult our spare parts dept. for the detailed inquiry.

https://truckmanualshub.com/

5. How to use parts catalogue

FIG 208	FAN , COOLING	P1	Year / Month
T554ST / T554NC / T454ST / T454NC			2014 / 04

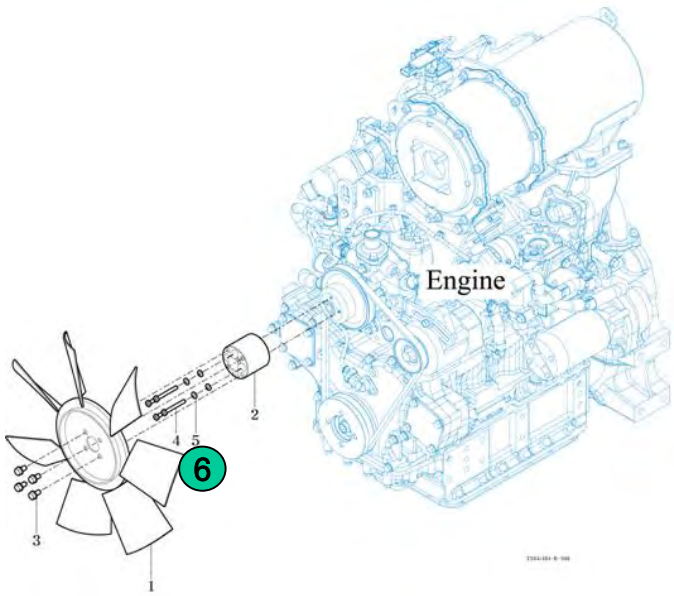

NOTE

FIG 208	FAN , COOLING	P1	Year / Month
T554ST / T554NC / T454ST / T454NC			2014 / 04

KEY NO.	PART NO.	DESCRIPSTION	SPEC.	QTY. T554ST	QTY. T554NC	QTY. T454ST	QTY. T454NC	REPAIR	EFFECTIVE DATE	REMARKS
208 001	19951030790	FAN , COOLING(412)		1	1	1	1			
208 002	17461000060	SPACER , FAN		1	1	1	1			
208 003	V2173608016	BOLT , HEX/S	M8X16	4	4	4	4			
208 [illegible]	V2053[illegible]0	BOLT , HEX C/R	M[illegible]	4	4	4	4			
208 005	V4011600060	WASHER , SPRING	M6	4	4	4	4			

NOTE

① Group Indication : Indicate the relevant location of the part with a symbol illustration.

② Figure Number: Indicate the relevant section of the machine with a figure number.

③ Section Name : Indicate the section name of the machine

④ Section Page : Page number of the section in this catalogue.

⑤ Date : Show the Year/Month of the section made or updated

https://truckmanualshub.com/

⑥ Key number : Indicating number of each parts in the illustration.

⑦ Part Number : Unique part number maintained in our system

The part number starting with V or M means it is TYM s standard part

The alphabet at the end of part number means the status of material or the color of paint

Legend : M:Machining, DG:Dark Gray, BR:Bright Red, SW:Summer White, PB:Pure Black, GB:Glossy Black, SR:Super Red, MS:Metallic Silver DD:Heat proof Black, TY: Tangerine Yellow etc.

⑧ Description : Description of a part, Abbreviation means as follows.

- Indicate the mixture condition of a part

ASSY : Assembly with a mixture of several parts, so can be broke up retaining their original form

COMP : Assembly with a mixture of several parts, but can not be broke up retaining their original form

SUB : mean the same as ASSY but used in lower level in aid.

SET : Part consist of ASSY, COMP, and part(s) as a group

- Indicate the location of a part

LH: Left, RH: Right, FR: Front, RR: Rear, UPR: Upper, LOW: Lower

⑨ Spec : Type of the standard items like bolt or nut

⑩ Quantity : Total quantity of the part referred to in the page.

Symbol below indicate options. So, show the quantity of each option.

Note) AR means as requested quantity.

⑪ Repair Parts consumption frequency class: indicate the level of a part in aid of stocking spares, anticipating the service requirements.

A :Fast moving part(frequently required)

B :Medium moving part (sometimes required)

C :Slow moving part(rarely required)

⑫ EFFECTIVE DATE :

Year/Month~ : From which the change starts

~ Year/Month : To which the part installed

⑬ Notes : explain some reference data

⑭ Remark : indicate reference data or abbreviation in the content.

https://truckmanualshub.com/

ENGINEERING GROUP INDEX

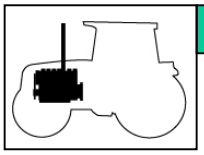

1 ENGINE

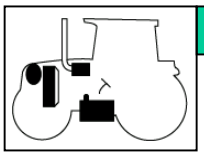

2 ENGINE ACCESSORIES & CONTROL

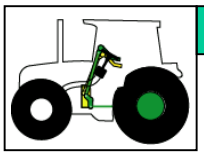

3 CLUTCH,BRAKE,STEERING

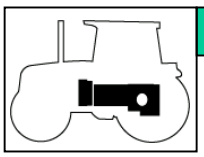

4 TRANSMISSION & REAR AXLE

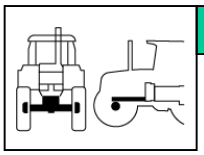

5 FRONT AXLE,SUPPORTER & DRIVE SHAFT

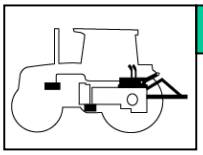

6 HYDRAULICS & 3-POINT LINK

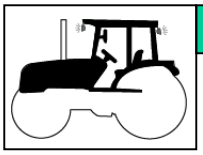

7 SHEET METAL & CABIN

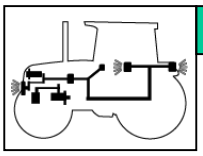

8 ELECTRICALS & HARNESS

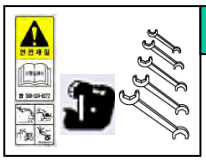

9 LABEL,TOOLS

067	020	12305180020
077	036	12403160020
036	005	13022250030
037	010	13022250131
041	005	13022250232
046	002	13022250333

10 NUMERICAL INDEX

https://truckmanualshub.com/

CONTENTS

ENGINE

1 ENGINE

FIG 101 CYLINDER BLOCK ----------04
FIG 102A OILJET ASS'Y OPTION(T574) ----------06
FIG 102B OILJET ASS'Y OPTION(T494) ----------08
FIG 103 CRANK SHAFT ----------10
FIG 104 PISTON ----------12
FIG 105 CYLINDER HEAD ----------14
FIG 106 ROCKER LEVER ----------16
FIG 107 HEAD COVER ----------18
FIG 108 GEAR CASE ----------20
FIG 109 IDLE GEAR ----------22
FIG 110 CAM SHAFT ----------24
FIG 111 OIL PUMP ----------26
FIG 112 HYD. PUMP DRIVE ----------28
FIG 113 2ND BALANCE ----------30
FIG 114 OIL PAN ----------32
FIG 115A INTAKE MANIFOLD(T574) ----------34
FIG 115B INTAKE MANIFOLD(T494) ----------36
FIG 116A EXHAUST MANIFOLD(T574) ----------38
FIG 116B EXHAUST MANIFOLD(T494) ----------40
FIG 117A TURBOCHARGER ASSoY(T574) ----------42
FIG 117B TURBOCHARGER ASSoY(T494) ----------44
FIG 118A TURBOCHARGER PLUMBING OPTION (T574) ----------46
FIG 118B TURBOCHARGER PLUMBING OPTION (T494) ----------48
FIG 119A BREATHER (T574) ----------50
FIG 119B BREATHER (T494) ----------52
FIG 120 FUEL INJECTION PUMP ----------54
FIG 121 FUEL INJECTION VALVE ----------56

https://truckmanualshub.com/

FIG 122 FUEL PIPE ASS'Y ----------58
FIG 123 OIL FILTER ----------60
FIG 124 OIL COOLER ----------62
FIG 125 OIL GAUGUE ----------64
FIG 126 OIL FILLER CAP ----------66
FIG 127 COOLING WATER PUMP ----------68
FIG 128 CRANK SHAFT PULLEY ----------70
FIG 129 V-PULLEY ----------72
FIG 130 COOLING FAN ----------74
FIG 131 FLYWHEEL HOUSING ----------76
FIG 132 FLYWHEEL ----------78
FIG 133 GLOW PLUG ASS'Y OPTION ----------80
FIG 134 STARTING MOTOR ----------82
FIG 135 FUEL FILTER BRACKET ASSoY ----------84
FIG 136 ALTERNATOR ----------86
FIG 137 V-BELT ----------88
FIG 138 FUEL FILTER ----------90
FIG 139A DPF SUPPORT (T574) ----------92
FIG 139B DPF SUPPORT (T494) ----------94
FIG 140 DATAPLATE ----------96
FIG 141 NAME PLATE, STARTING MOTOR ----------98
FIG 142A DPF ASSoY (T574) ----------100
FIG 142B DPF ASSoY (T494) ----------102
FIG 143 LIFT ASSoY ----------104
FIG 144 COMP . DRIVE PULLEY ASSyY OPTION ----------106

https://truckmanualshub.com/

CHASSIS

2 ENGINE ACCESSORIES & CONTROL

FIG 201 AIR CLEANER (T574)----------112
FIG 201 AIR CLEANER (T494)----------114
FIG 202 RADIATOR----------116
FIG 203 MUFFLER----------118
FIG 204 FUEL HOSE & FILTER----------120
FIG 205 FUEL TANK----------122
FIG 206 ACCELERATOR----------124
FIG 207 OIL COOLER----------126

3 CLUTCH, BRAKE, STEERING

FIG 301 CLUTCH----------132
FIG 302 CLUTCH PEDAL----------134
FIG 303 BRAKE----------136
FIG 304 BRAKE PEDAL & LINK----------138
FIG 305 FRONT WHEEL----------140
FIG 306 REAR WHEEL----------142
FIG 307 POWER STEERING WHEEL----------144
FIG 308 POWER STEERING VALVE----------146
FIG 309 POWER STEERING CYLINDER----------148

4 TRANSMISSION & REAR AXLE

FIG 401 TRANSMISSION FRONT CASE----------154
FIG 402 FORWARD & BACKWARD GEARS----------156
FIG 403 IDLE & COUNTER GEARS----------158
FIG 404 MAIN SHIFT GEARS----------160
FIG 405 P.T.O DRIVE SHAFT----------162
FIG 406 MAIN CHANGE LEVER----------164

https://truckmanualshub.com/

FIG 407 REVERSE CHANGE LEVER----------166
FIG 408 TRANSMISSION MID CASE----------168
FIG 409 TRANSMISSION REAR CASE----------170
FIG 410 SUB CHANGE GEARS----------172
FIG 411 SUB CHANGE SHIFTER----------174
FIG 413 DRIVE GEARS----------176
FIG 414 4WD CHANGE LEVER----------178
FIG 415 P.T.O CHANGE GEARS----------180
FIG 417 REAR DIFFERENTIAL GEARS----------182
FIG 418 REAR AXLE HOUSING----------184

5 FRONT AXLE,SUPPORTER & DRIVE SHAFT

FIG 501 FRONT AXLE SUPPORT----------190
FIG 502 FRONT DRIVE SHAFT----------192
FIG 503 FRONT AXLE HOUSING----------194
FIG 504 FRONT DIFFERENTIAL GEARS----------196
FIG 505 FRONT GEAR CASE (1)----------198
FIG 506 FRONT GEAR CASE (2)----------200
FIG 507 FRONT GEAR CASE (3)----------202

6 HYDRAULICS & 3P-LINK

FIG 601 CYLINDER CASE----------208
FIG 602 LIFT ARM----------210
FIG 603 CYLINDER----------212
FIG 604 POSITION LINK----------214
FIG 605 CONTROL VALVE----------216
FIG 606 DRAFT LINK----------218
FIG 607 POSITION & DRAFT LEVER----------222
FIG 608 EXTERIOR HYD. VALVE----------224
FIG 609 HYDRAULIC PIPE----------226
FIG 610 JOYSTICK----------228
FIG 612 HITCH & 3-POINT LINK----------230
FIG 613 LOWER LINK & LIFT ROD----------234

https://truckmanualshub.com/

7 SHEET METAL & CABIN

FIG 701 BONNET FRAME----------240
FIG 702 BONNET (1)----------242
FIG 703 EXTENSION COVER----------246
FIG 704A LEVER COVER & STEP----------248
FIG 704B LEVER COVER & STEP-Non CAB----------250
FIG 705 FRONT & REAR MOUNTING----------252
FIG 706 SEAT & MAT----------254
FIG 709 DOOR----------256
FIG 710A FRONT GLASS----------260
FIG 710B FRAME & 2POLES-ROPS-Non CAB----------262
FIG 711 SIDE GLASS----------264
FIG 712 REAR GLASS----------266
FIG 713A SUB FENDER & COVER----------268
FIG 713B SUB FENDER & COVER-Non CAB----------270
FIG 714A MIRROR----------272
FIG 714B MIRROR&WORKING LAMP-Non CAB----------274
FIG 715A HEATER & AIR-CON----------276
FIG 715B HEATER & AIR-CON----------278
FIG 716 FENDER COVER----------280
FIG 717 ROOF----------282
FIG 718 CABIN INTERIOR----------284

8 ELECTRICALS & HARNESS

FIG 801 BATTERY & MOUNTING----------290
FIG 802 HARNESS LAMP----------292
FIG 803 INSTRUMENT PANEL----------294
FIG 804 ELECTRIC SYSTEM (1)----------296
FIG 805A ELECTRIC SYSTEM (2)----------298
FIG 805B ELECTRIC SYSTEM (2)-Non CAB----------300
FIG 806 ELECTRIC SYSTEM (3)----------302

https://truckmanualshub.com/

9 LABEL& TOOLS

FIG 901 TOOL & ACCESSORY----------308
FIG 902 LABEL----------310
FIG 903 OPTION----------314

10 NUMERICAL INDEX

ENGINE----------317
CHASSIS----------321

https://truckmanualshub.com/

ENGINE

1 ENGINE

FIG 101 CYLINDER BLOCK ----------04
FIG 102A OILJET ASS'Y OPTION(T574) ----------06
FIG 102B OILJET ASS'Y OPTION(T494) ----------08
FIG 103 CRANK SHAFT ----------10
FIG 104 PISTON ----------12
FIG 105 CYLINDER HEAD ----------14
FIG 106 ROCKER LEVER ----------16
FIG 107 HEAD COVER ----------18
FIG 108 GEAR CASE ----------20
FIG 109 IDLE GEAR ----------22
FIG 110 CAM SHAFT ----------24
FIG 111 OIL PUMP ----------26
FIG 112 HYD. PUMP DRIVE ----------28
FIG 113 2ND BALANCE ----------30
FIG 114 OIL PAN ----------32
FIG 115A INTAKE MANIFOLD(T574) ----------34
FIG 115B INTAKE MANIFOLD(T494) ----------36
FIG 116A EXHAUST MANIFOLD(T574) ----------38
FIG 116B EXHAUST MANIFOLD(T494) ----------40
FIG 117A TURBOCHARGER ASSoY(T574) ----------42
FIG 117B TURBOCHARGER ASSoY(T494) ----------44
FIG 118A TURBOCHARGER PLUMBING OPTION (T574) ----------46
FIG 118B TURBOCHARGER PLUMBING OPTION (T494) ----------48
FIG 119A BREATHER (T574) ----------50
FIG 119B BREATHER (T494) ----------52
FIG 120 FUEL INJECTION PUMP ----------54
FIG 121 FUEL INJECTION VALVE ----------56

https://truckmanualshub.com/

FIG 122 FUEL PIPE ASS'Y ----------58
FIG 123 OIL FILTER ----------60
FIG 124 OIL COOLER ----------62
FIG 125 OIL GAUGUE ----------64
FIG 126 OIL FILLER CAP ----------66
FIG 127 COOLING WATER PUMP ----------68
FIG 128 CRANK SHAFT PULLEY ----------70
FIG 129 V-PULLEY ----------72
FIG 130 COOLING FAN ----------74
FIG 131 FLYWHEEL HOUSING ----------76
FIG 132 FLYWHEEL ----------78
FIG 133 GLOW PLUG ASS'Y OPTION ----------80
FIG 134 STARTING MOTOR ----------82
FIG 135 FUEL FILTER BRACKET ASSoY ----------84
FIG 136 ALTERNATOR ----------86
FIG 137 V-BELT ----------88
FIG 138 FUEL FILTER ----------90
FIG 139A DPF SUPPORT (T574) ----------92
FIG 139B DPF SUPPORT (T494) ----------94
FIG 140 DATAPLATE ----------96
FIG 141 NAME PLATE, STARTING MOTOR ----------98
FIG 142A DPF ASSoY (T574) ----------100
FIG 142B DPF ASSoY (T494) ----------102
FIG 143 LIFT ASSoY ----------104
FIG 144 COMP . DRIVE PULLEY ASSyY OPTION ----------106

https://truckmanualshub.com/

CHASSIS

2 ENGINE ACCESSORIES & CONTROL

FIG 201 AIR CLEANER (T574)----------112
FIG 201 AIR CLEANER (T494)----------114
FIG 202 RADIATOR----------116
FIG 203 MUFFLER----------118
FIG 204 FUEL HOSE & FILTER----------120
FIG 205 FUEL TANK----------122
FIG 206 ACCELERATOR----------124
FIG 207 OIL COOLER----------126

https://truckmanualshub.com/

3 CLUTCH, BRAKE, STEERING

FIG 301 CLUTCH----------132
FIG 302 CLUTCH PEDAL----------134
FIG 303 BRAKE----------136
FIG 304 BRAKE PEDAL & LINK----------138
FIG 305 FRONT WHEEL----------140
FIG 306 REAR WHEEL----------142
FIG 307 POWER STEERING WHEEL----------144
FIG 308 POWER STEERING VALVE----------146
FIG 309 POWER STEERING CYLINDER----------148

https://truckmanualshub.com/

4 TRANSMISSION & REAR AXLE

FIG 401 TRANSMISSION FRONT CASE----------154
FIG 402 FORWARD & BACKWARD GEARS----------156
FIG 403 IDLE & COUNTER GEARS----------158
FIG 404 MAIN SHIFT GEARS----------160
FIG 405 P.T.O DRIVE SHAFT----------162
FIG 406 MAIN CHANGE LEVER----------164
FIG 407 REVERSE CHANGE LEVER----------166
FIG 408 TRANSMISSION MID CASE----------168
FIG 409 TRANSMISSION REAR CASE----------170
FIG 410 SUB CHANGE GEARS----------172
FIG 411 SUB CHANGE SHIFTER----------174
FIG 413 DRIVE GEARS----------176
FIG 414 4WD CHANGE LEVER----------178
FIG 415 P.T.O CHANGE GEARS----------180
FIG 417 REAR DIFFERENTIAL GEARS----------182
FIG 418 REAR AXLE HOUSING----------184

https://truckmanualshub.com/

5 FRONT AXLE,SUPPORTER & DRIVE SHAFT

FIG 501 FRONT AXLE SUPPORT----------190
FIG 502 FRONT DRIVE SHAFT----------192
FIG 503 FRONT AXLE HOUSING----------194
FIG 504 FRONT DIFFERENTIAL GEARS----------196
FIG 505 FRONT GEAR CASE (1)----------198
FIG 506 FRONT GEAR CASE (2)----------200
FIG 507 FRONT GEAR CASE (3)----------202

https://truckmanualshub.com/

6 HYDRAULICS & 3P-LINK

FIG 601 CYLINDER CASE----------208
FIG 602 LIFT ARM----------210
FIG 603 CYLINDER----------212
FIG 604 POSITION LINK----------214
FIG 605 CONTROL VALVE----------216
FIG 606 DRAFT LINK----------218
FIG 607 POSITION & DRAFT LEVER----------222
FIG 608 EXTERIOR HYD. VALVE----------224
FIG 609 HYDRAULIC PIPE----------226
FIG 610 JOYSTICK----------228
FIG 612 HITCH & 3-POINT LINK----------230
FIG 613 LOWER LINK & LIFT ROD----------234

https://truckmanualshub.com/

7 SHEET METAL & CABIN

FIG 701 BONNET FRAME----------240
FIG 702 BONNET (1)----------242
FIG 703 EXTENSION COVER----------246
FIG 704A LEVER COVER & STEP----------248
FIG 704B LEVER COVER & STEP-Non CAB----------250
FIG 705 FRONT & REAR MOUNTING----------252
FIG 706 SEAT & MAT----------254
FIG 709 DOOR----------256
FIG 710A FRONT GLASS----------260
FIG 710B FRAME & 2POLES-ROPS-Non CAB----------262
FIG 711 SIDE GLASS----------264
FIG 712 REAR GLASS----------266
FIG 713A SUB FENDER & COVER----------268
FIG 713B SUB FENDER & COVER-Non CAB----------270
FIG 714A MIRROR----------272
FIG 714B MIRROR&WORKING LAMP-Non CAB----------274
FIG 715A HEATER & AIR-CON----------276
FIG 715B HEATER & AIR-CON----------278
FIG 716 FENDER COVER----------280
FIG 717 ROOF----------282
FIG 718 CABIN INTERIOR----------284

https://truckmanualshub.com/

8 ELECTRICALS & HARNESS

FIG 801 BATTERY & MOUNTING----------290
FIG 802 HARNESS LAMP----------292
FIG 803 INSTRUMENT PANEL----------294
FIG 804 ELECTRIC SYSTEM (1)----------296
FIG 805A ELECTRIC SYSTEM (2)----------298
FIG 805B ELECTRIC SYSTEM (2)-Non CAB----------300
FIG 806 ELECTRIC SYSTEM (3)----------302

https://truckmanualshub.com/

9 LABEL& TOOLS

FIG 901 TOOL & ACCESSORY----------308
FIG 902 LABEL----------310
FIG 903 OPTION----------314

https://truckmanualshub.com/

10 NUMERICAL INDEX

ENGINE ---------- 317
CHASSIS ---------- 321

https://truckmanualshub.com/

FIG 101 T574ST / T574NC / T494ST / T494NC	CYLINDER BLOCK	P1	YEAR 2018	

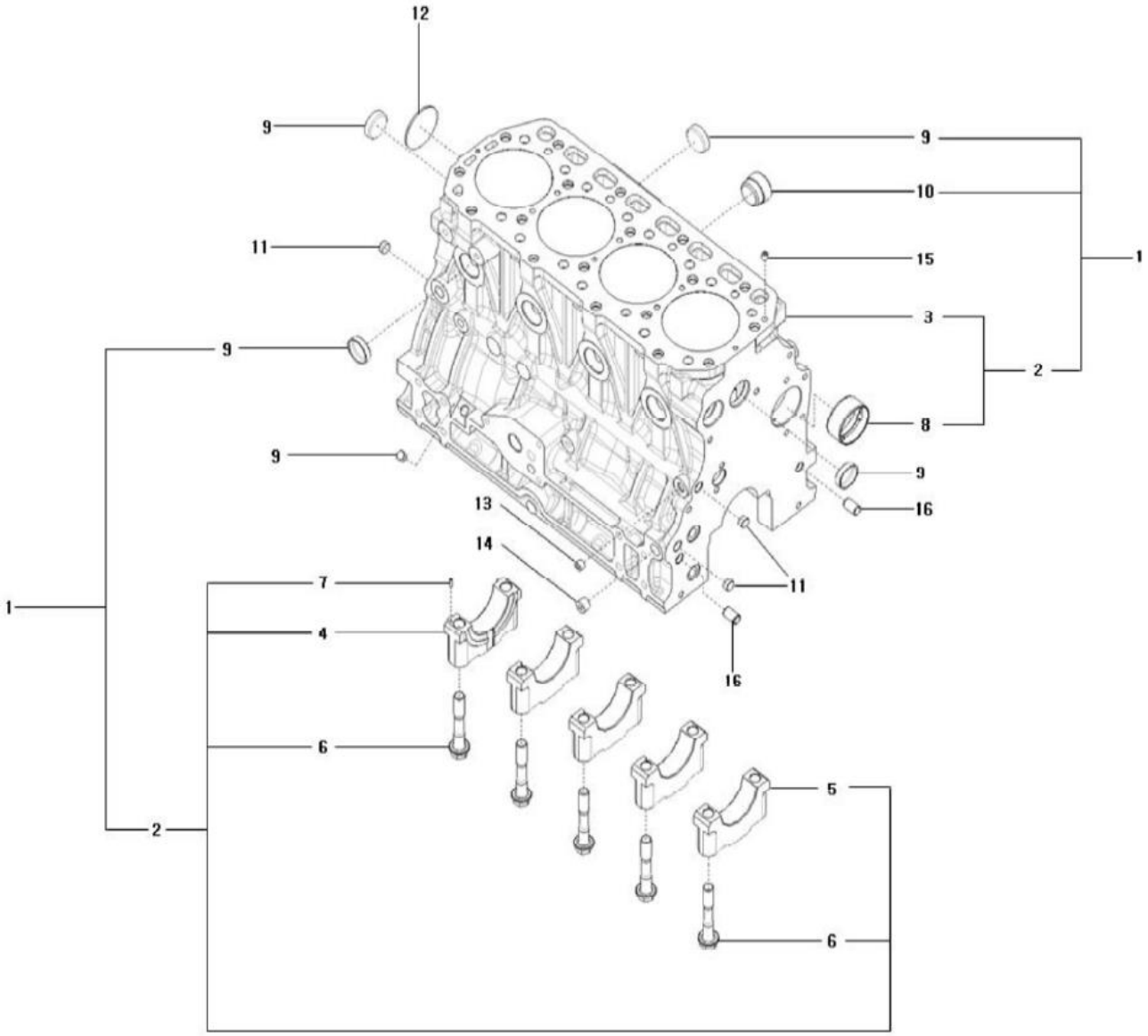

NOTE

https://truckmanualshub.com/

FIG 102A T574ST / T574NC / T494ST / T494NC	OIL JET ASS'Y OPTION(T574)	P1	YEAR 2018	

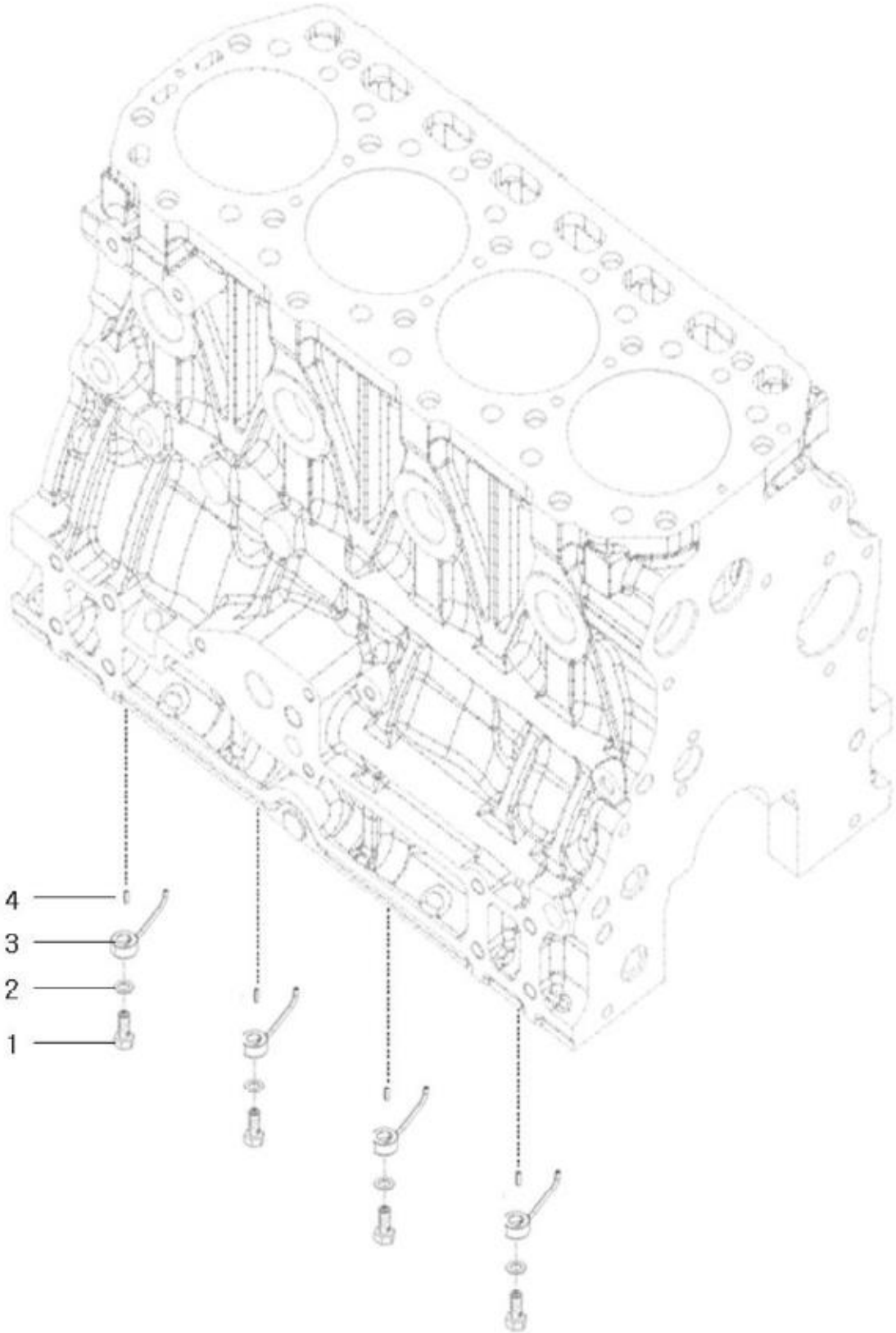

NOTE	

https://truckmanualshub.com/

FIG 102B T574ST / T574NC / T494ST / T494NC	OIL JET ASS'Y OPTION(T494)	P2	YEAR 2018	

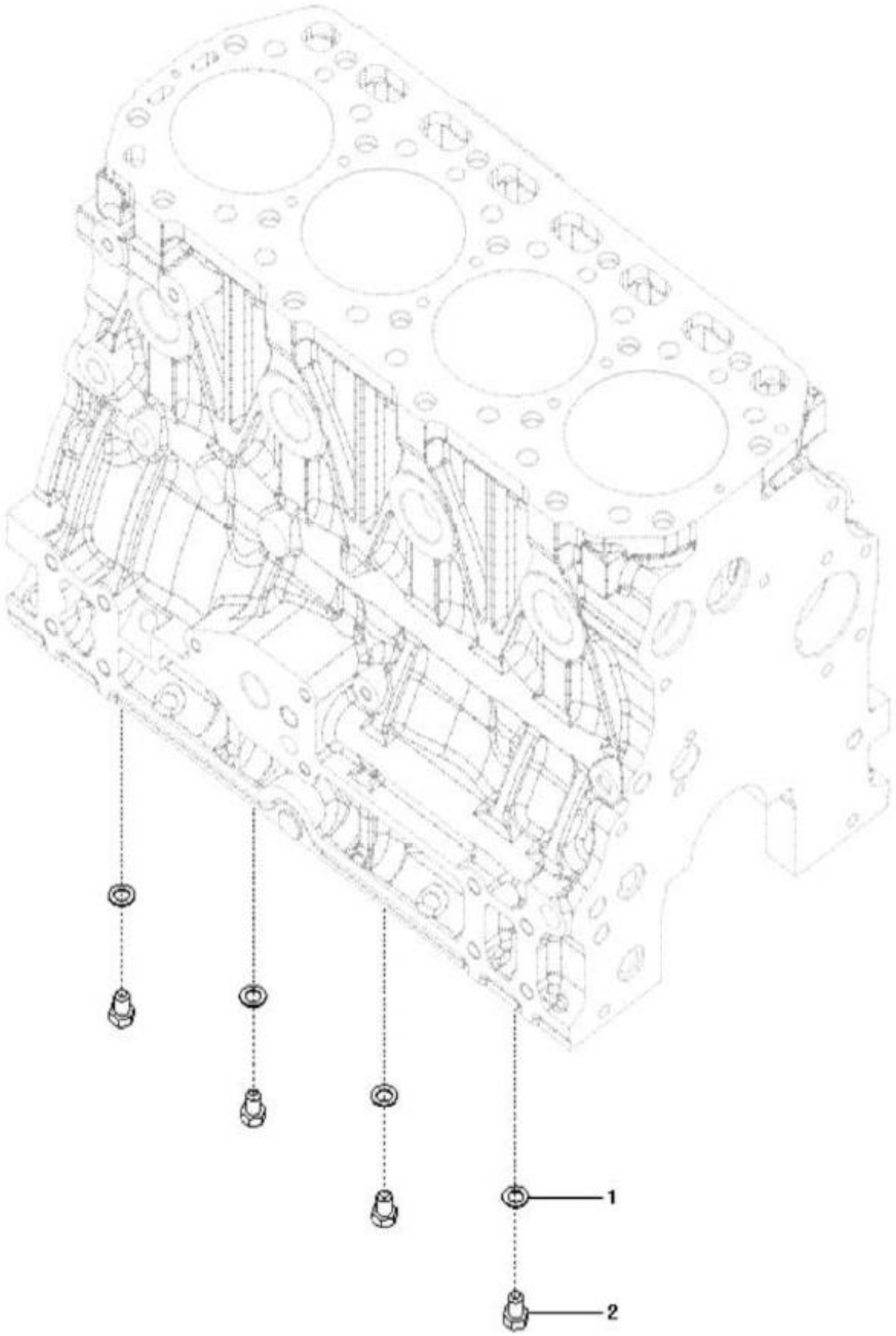

NOTE	

https://truckmanualshub.com/

FIG 103 T574ST / T574NC / T494ST / T494NC	CRANK SHAFT	P1	YEAR 2018	

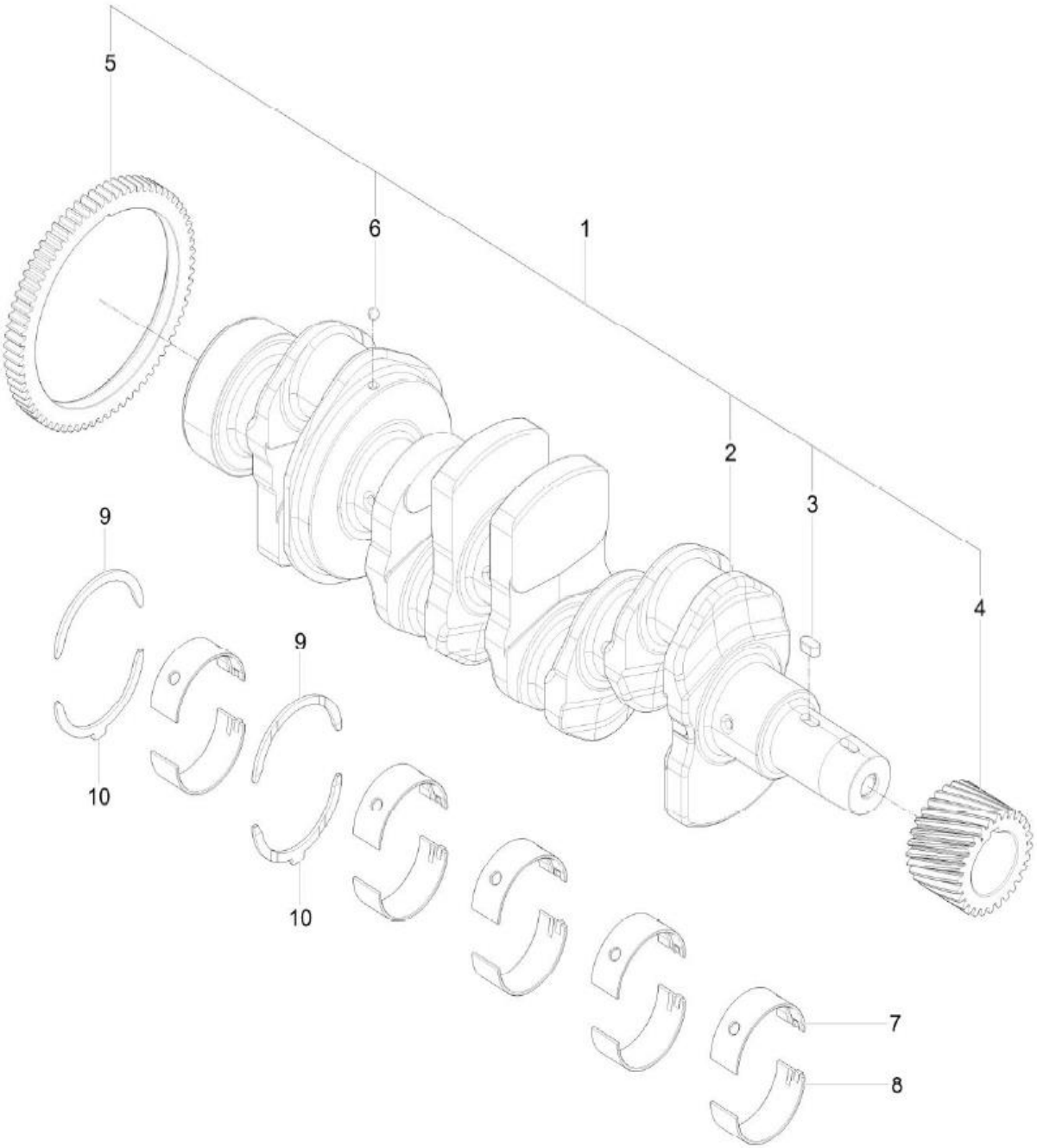

NOTE	

https://truckmanualshub.com/

FIG 104 T574ST / T574NC / T494ST / T494NC	PISTON	P1	YEAR 2018	

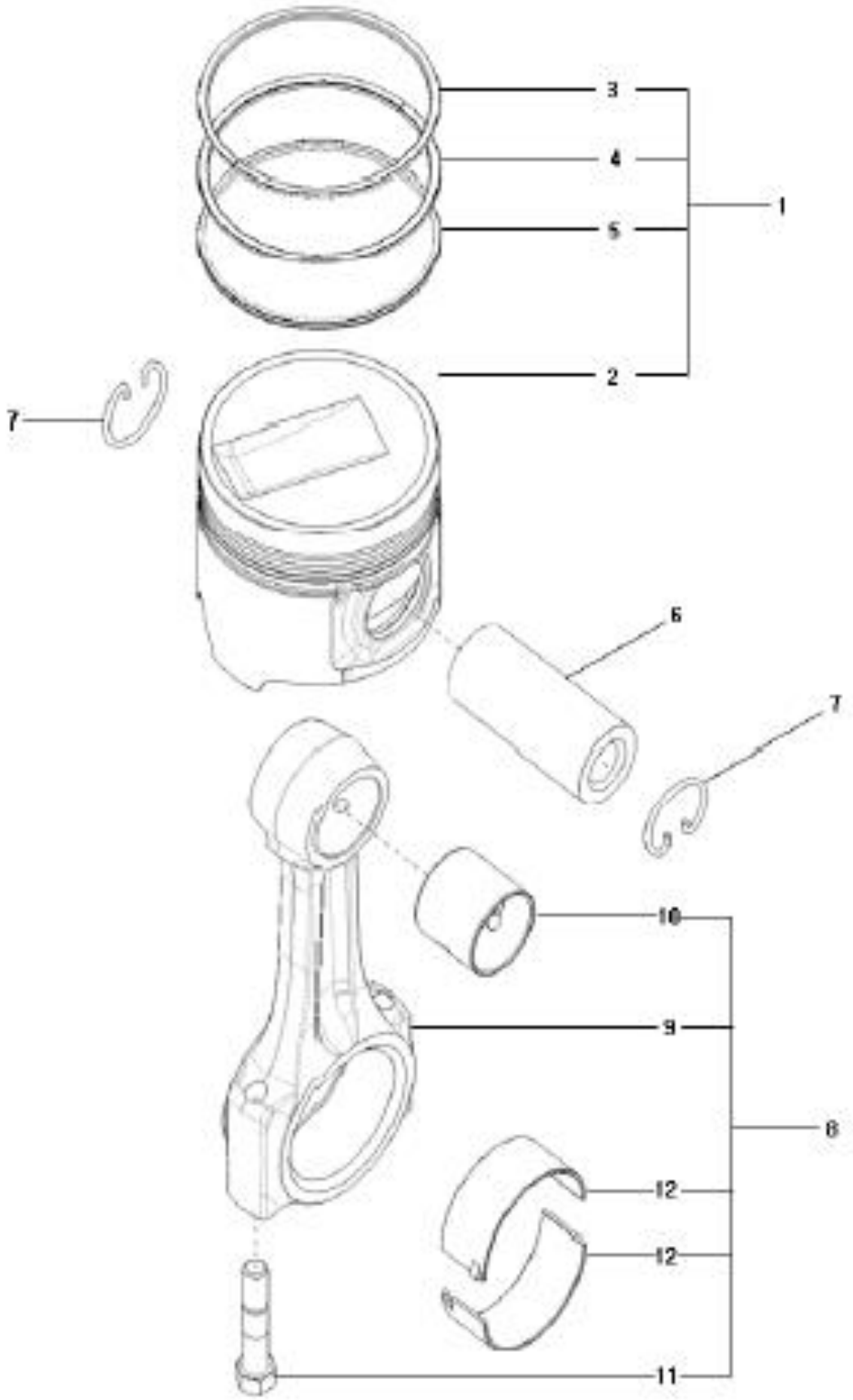

NOTE

https://truckmanualshub.com/

FIG 105 T574ST / T574NC / T494ST / T494NC	CYLINDER HEAD	P1	YEAR 2018	

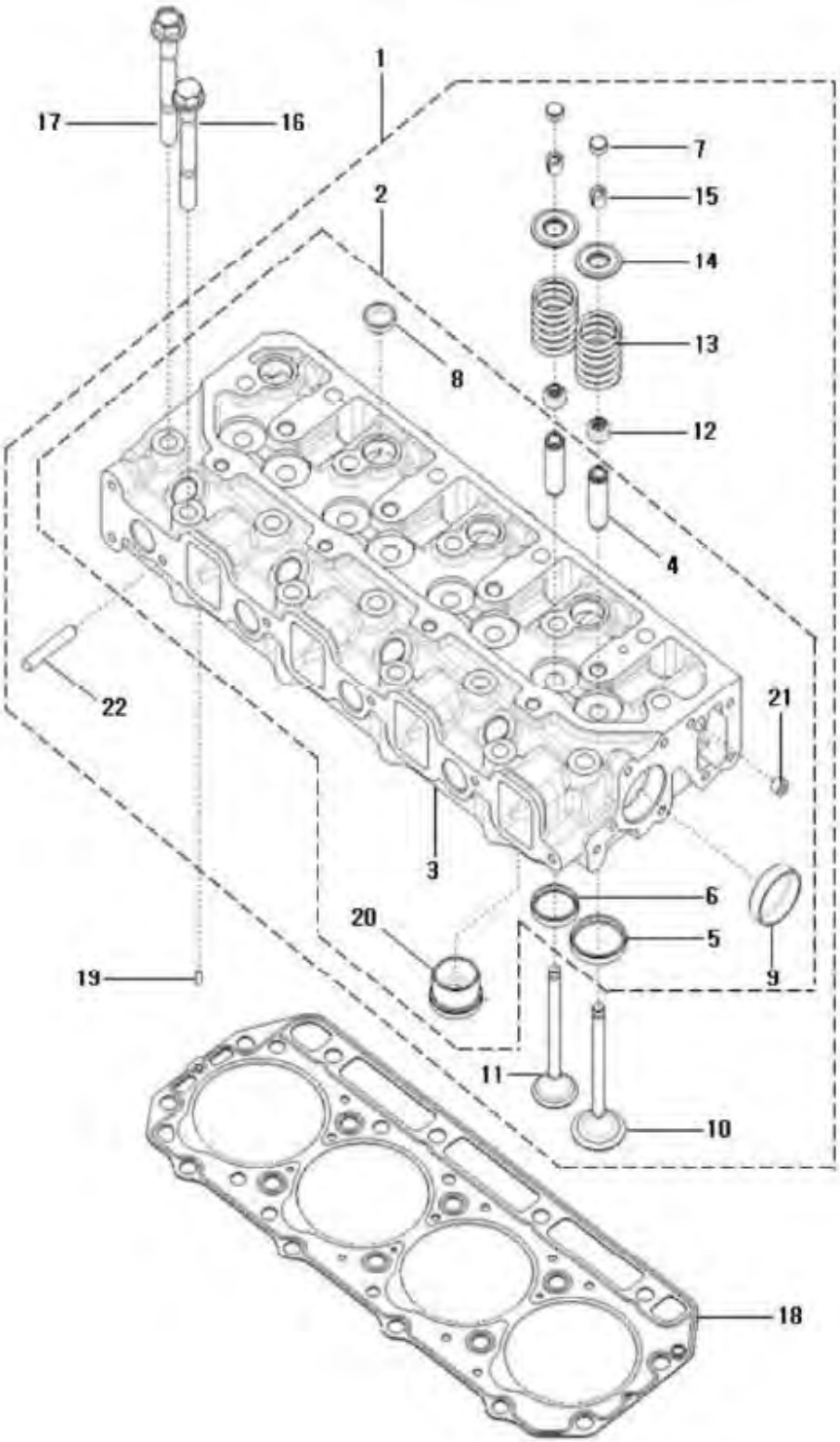

NOTE

https://truckmanualshub.com/

FIG 106 T574ST / T574NC / T494ST / T494NC	ROCKER LEVER	P1	YEAR 2018	

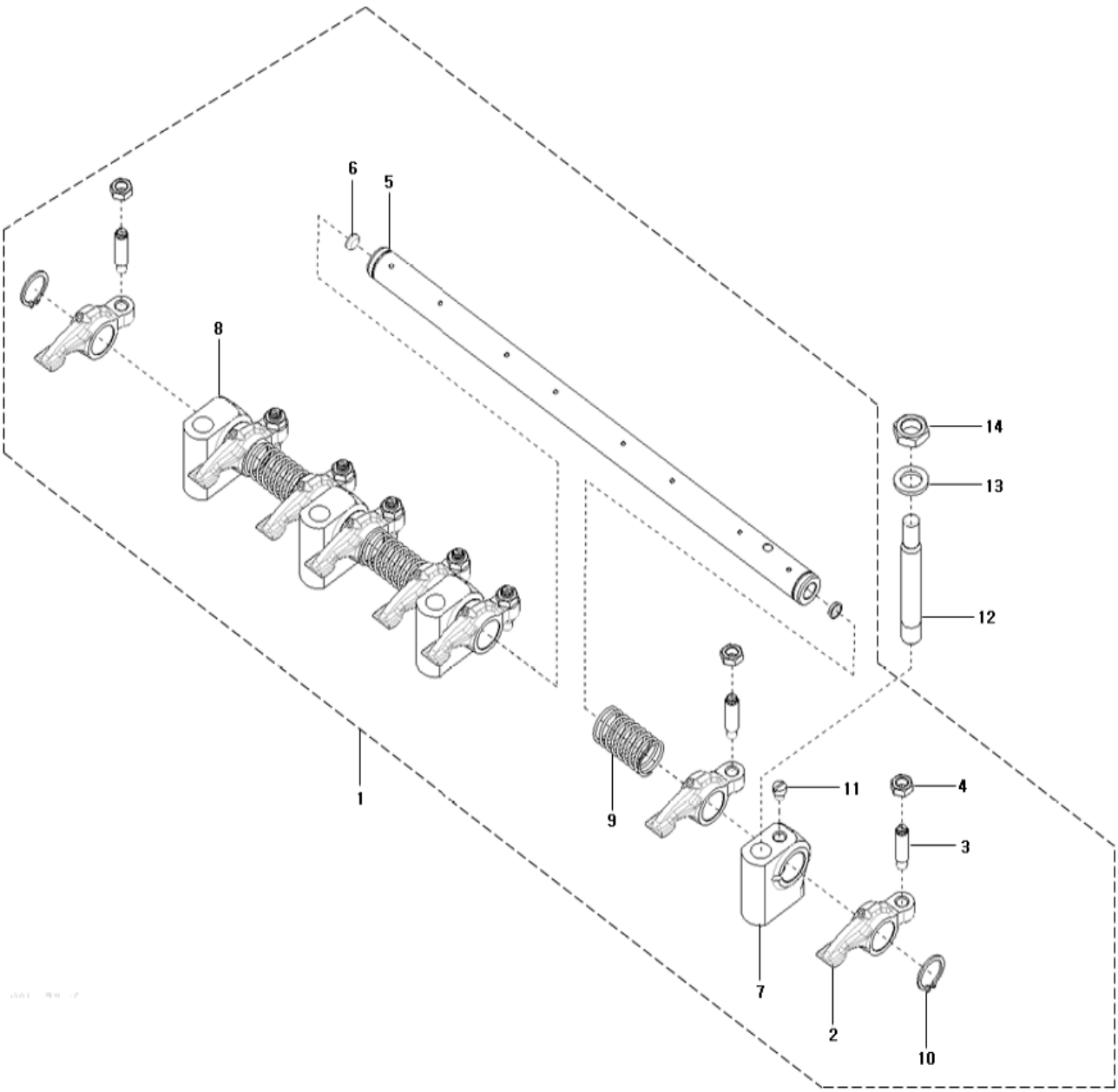

NOTE	

https://truckmanualshub.com/

FIG 107 T574ST / T574NC / T494ST / T494NC	HEAD COVER	P1	YEAR 2018	

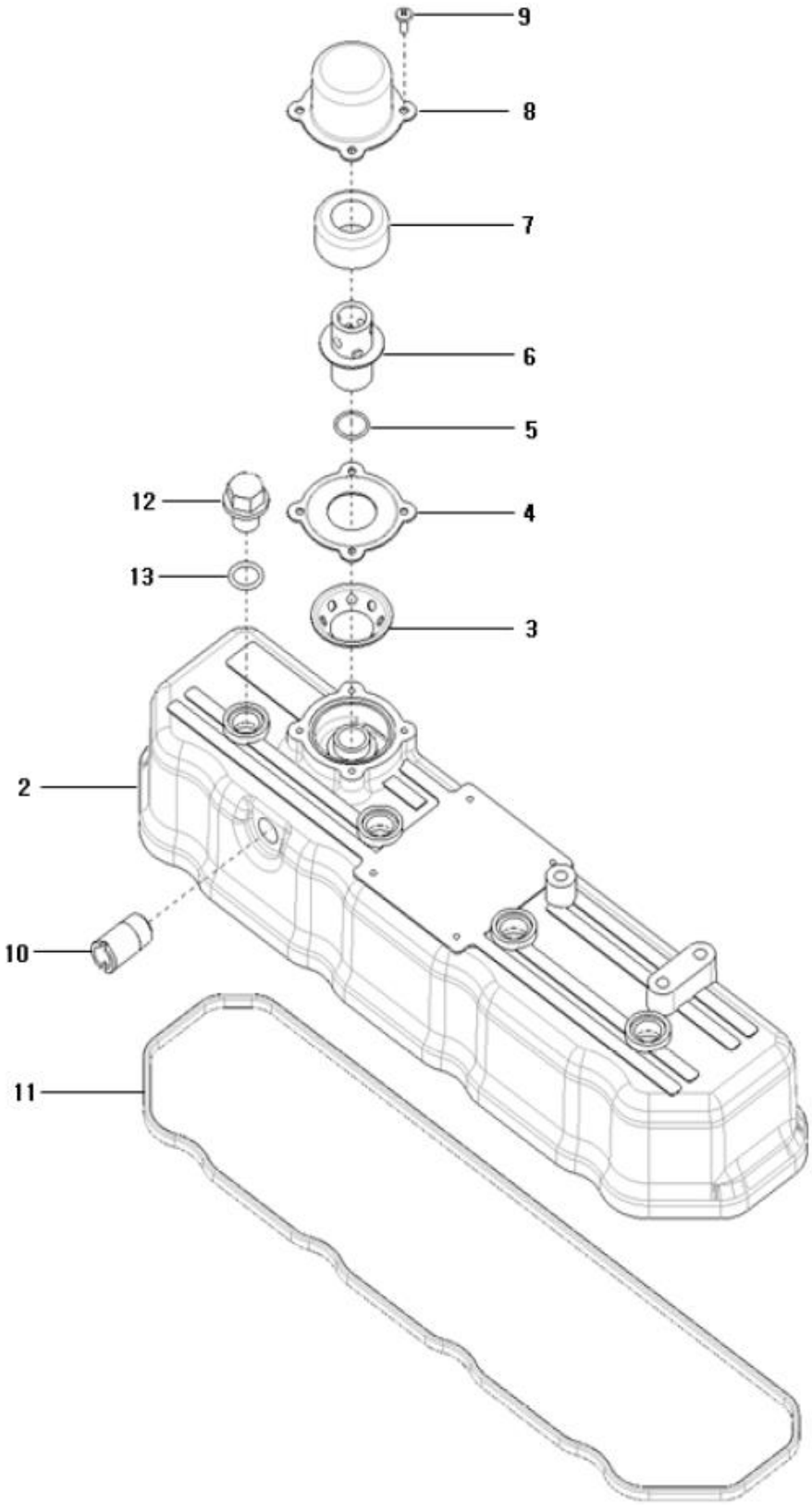

NOTE

https://truckmanualshub.com/

FIG 108

T574ST / T574NC / T494ST / T494NC

GEAR CASE

P1

YEAR

2018

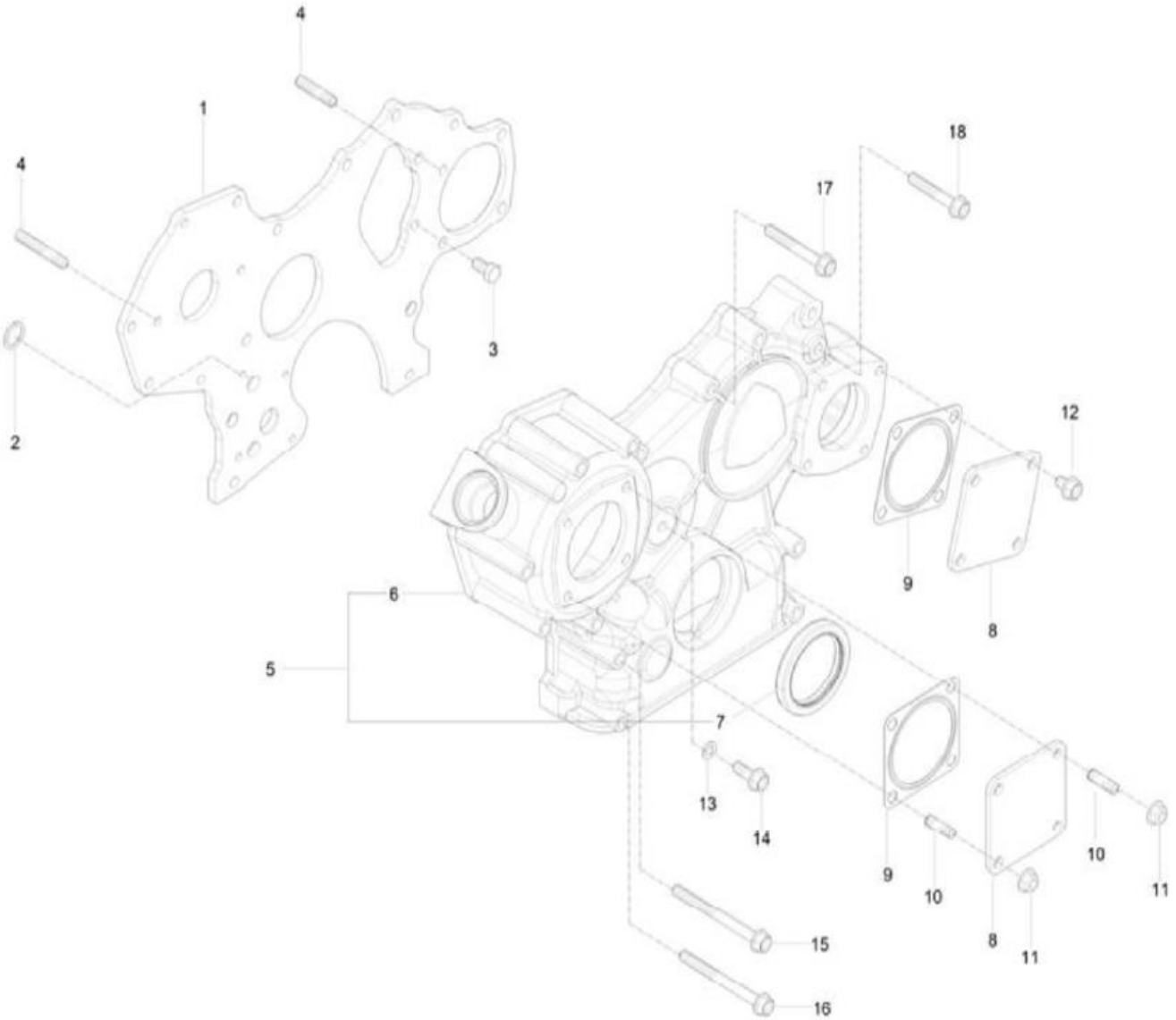

NOTE

https://truckmanualshub.com/

FIG 109 T574ST / T574NC / T494ST / T494NC	IDLE GEAR	P1	YEAR 2018	

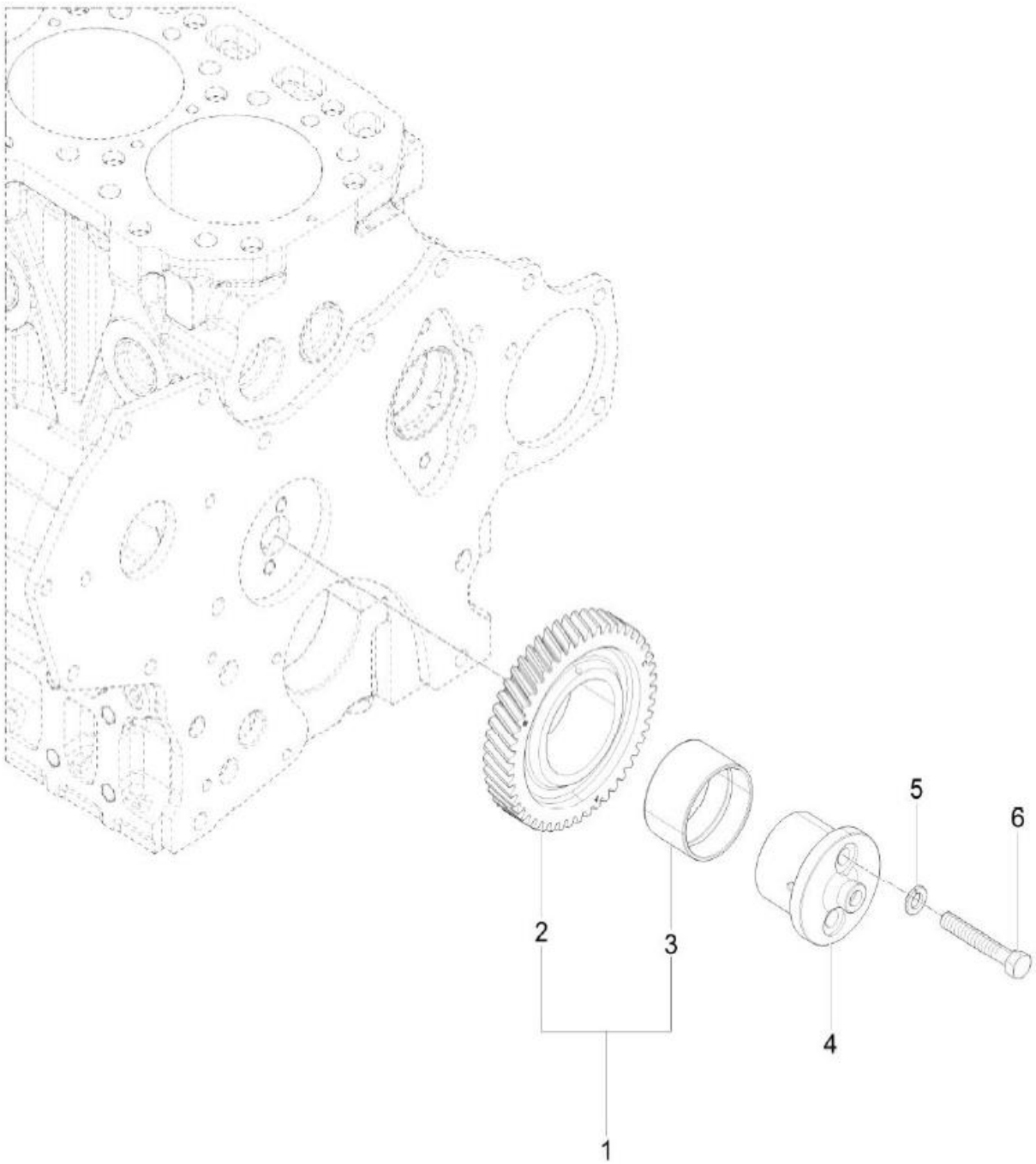

NOTE

https://truckmanualshub.com/

FIG 110 T574ST / T574NC / T494ST / T494NC	CAM SHAFT	P1	YEAR 2018	

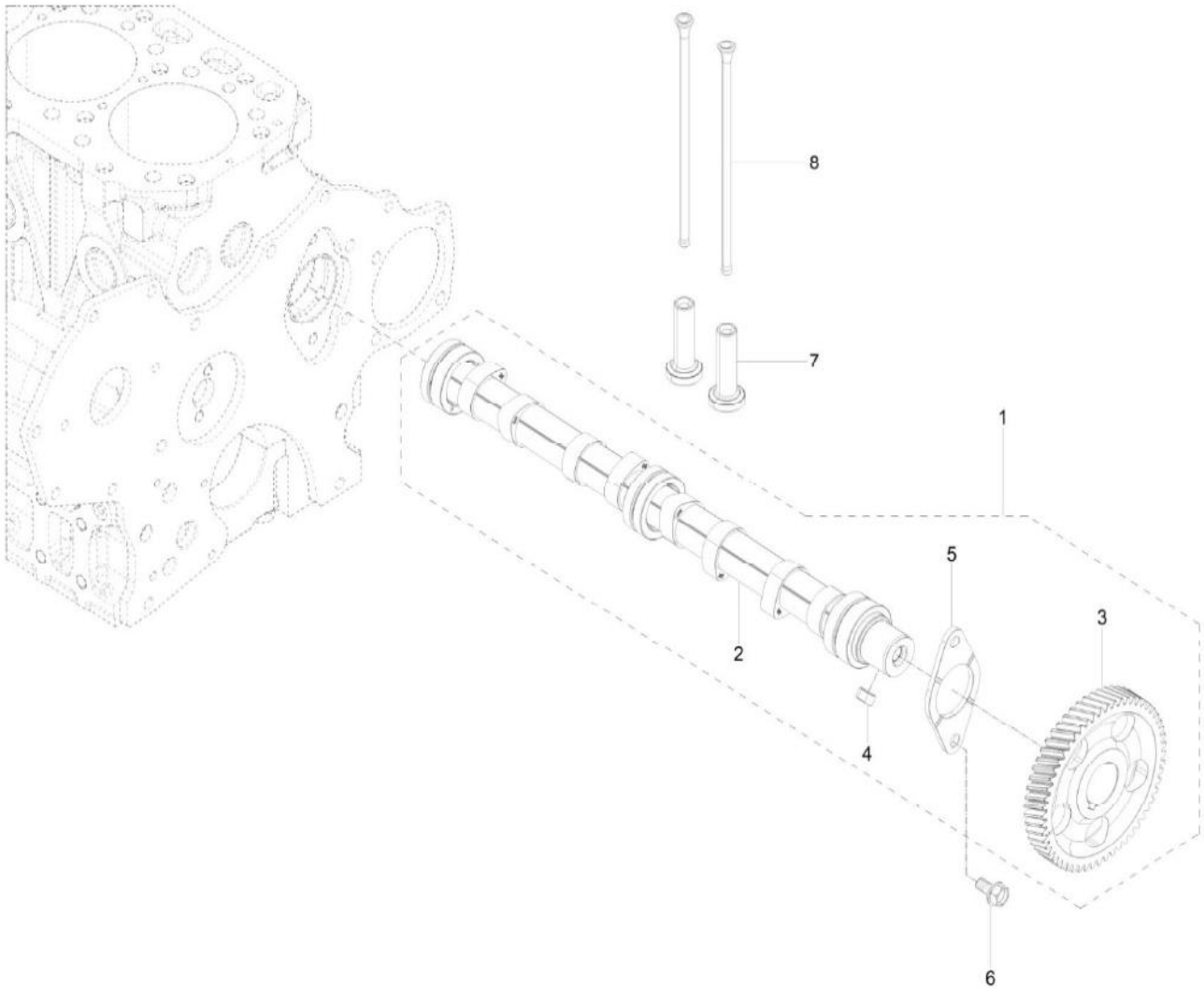

NOTE

https://truckmanualshub.com/

FIG 111 T574ST / T574NC / T494ST / T494NC	OIL PUMP	P1	YEAR 2018	

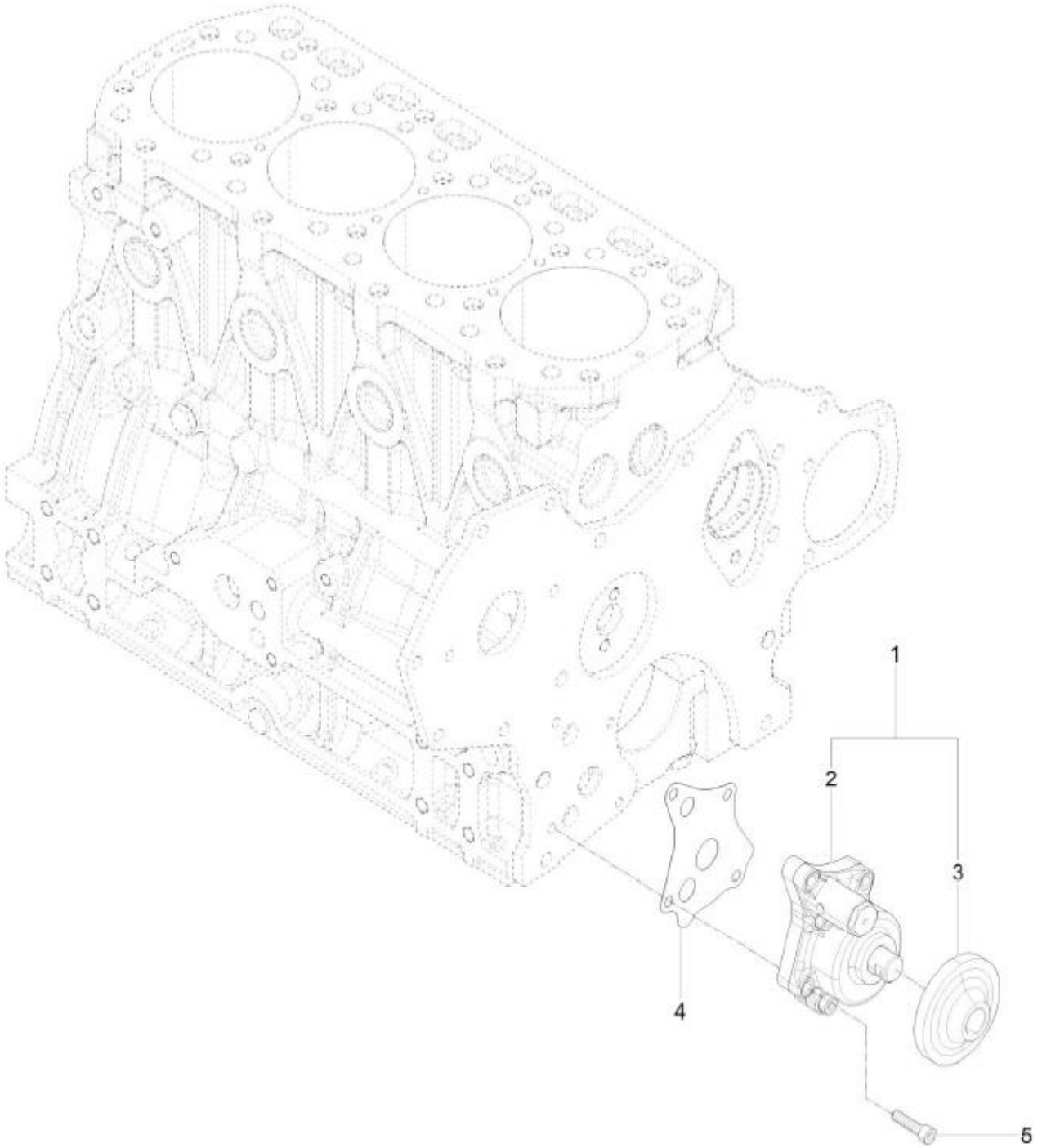

NOTE

https://truckmanualshub.com/

FIG 112 T574ST / T574NC / T494ST / T494NC	HYD. PUMP DRIVE	P1	YEAR 2018	

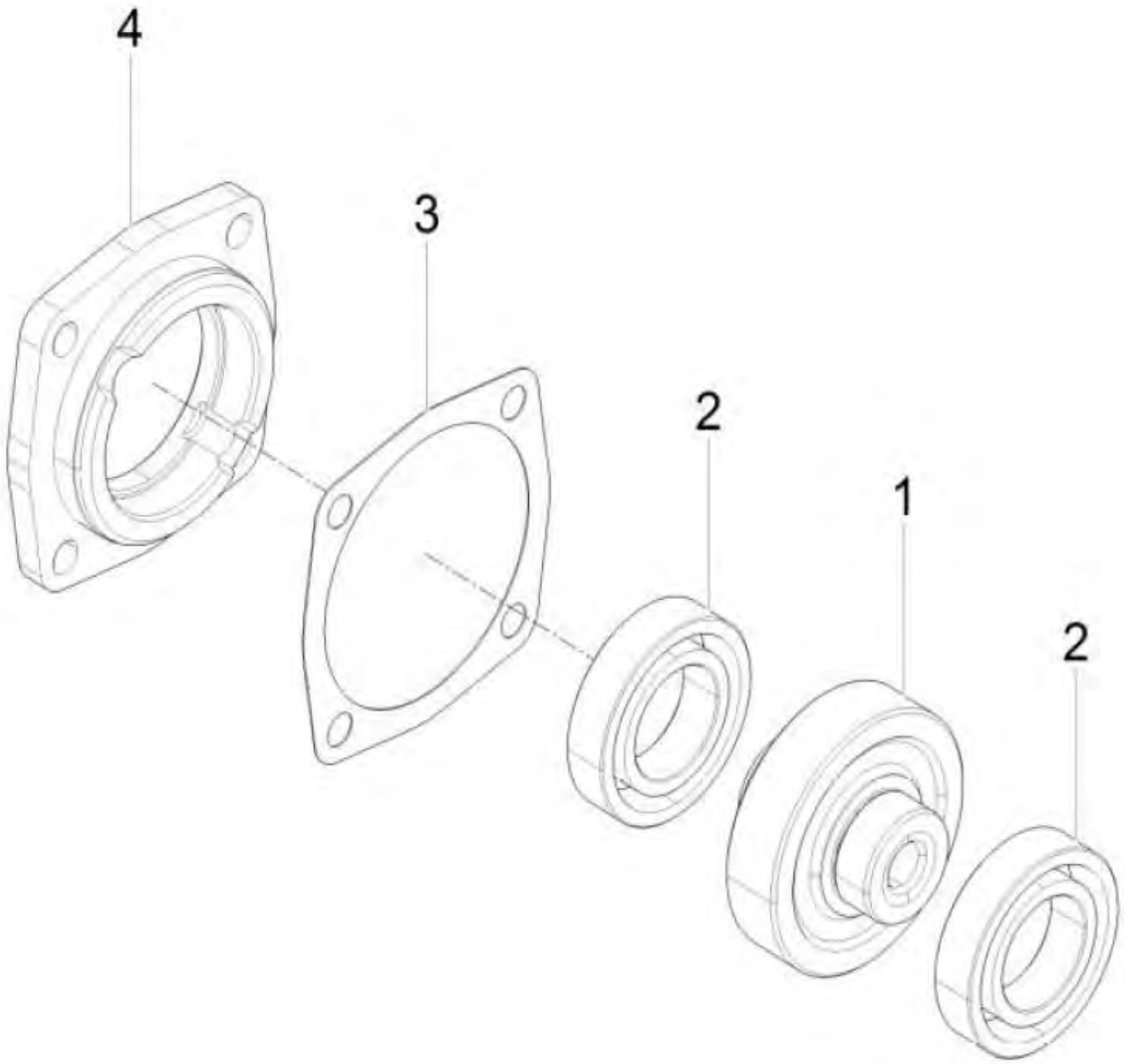

NOTE

https://truckmanualshub.com/

FIG 113 T574ST / T574NC / T494ST / T494NC	2ND BALANCE	P1	YEAR 2018	

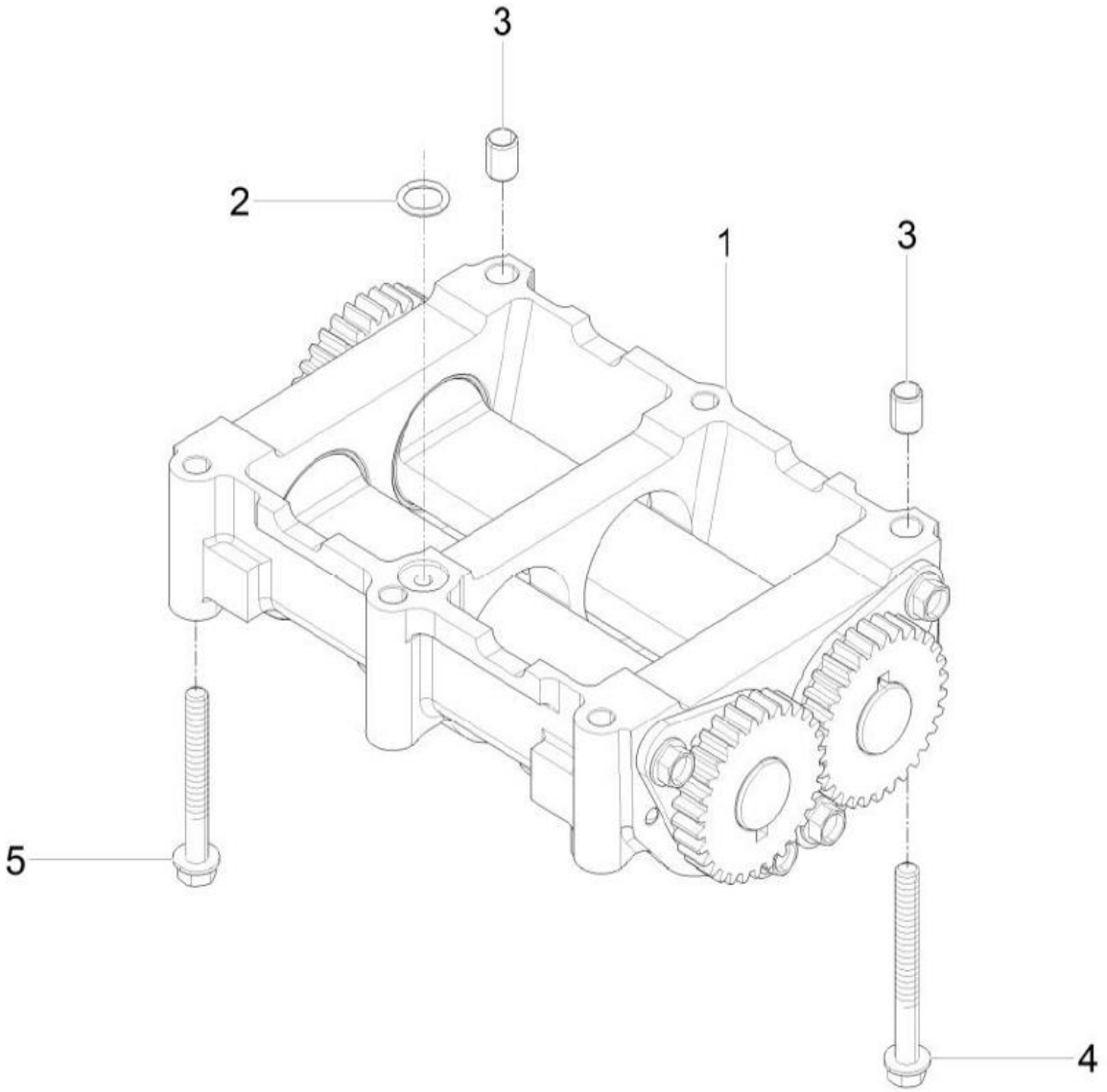

NOTE	

https://truckmanualshub.com/

FIG 114 T574ST / T574NC / T494ST / T494NC	OIL PAN	P1	YEAR 2018	

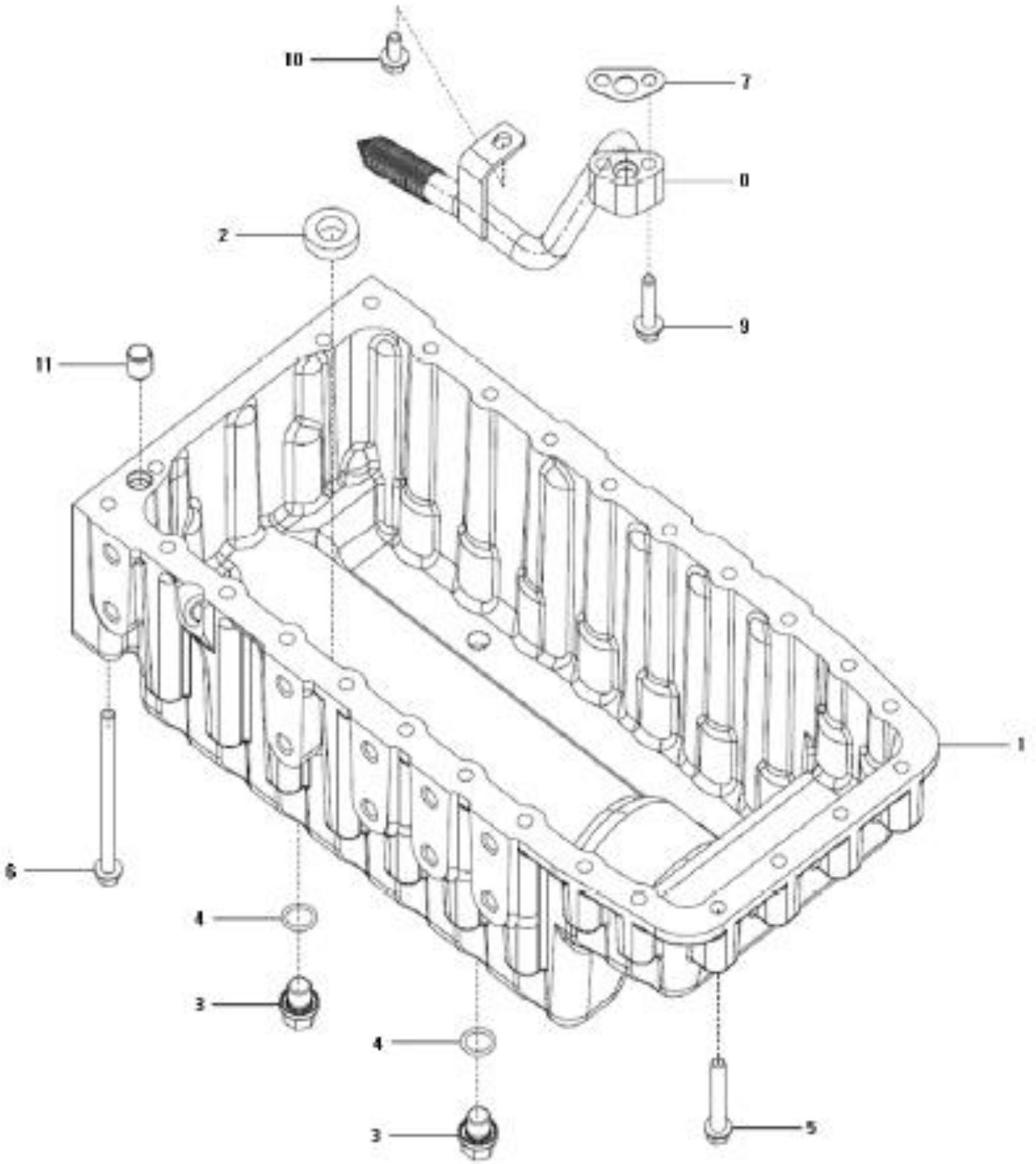

NOTE	

https://truckmanualshub.com/

FIG 115A

T574ST / T574NC / T494ST / T494NC

INTAKE MANIFOLD (T574)

P1

YEAR

2018

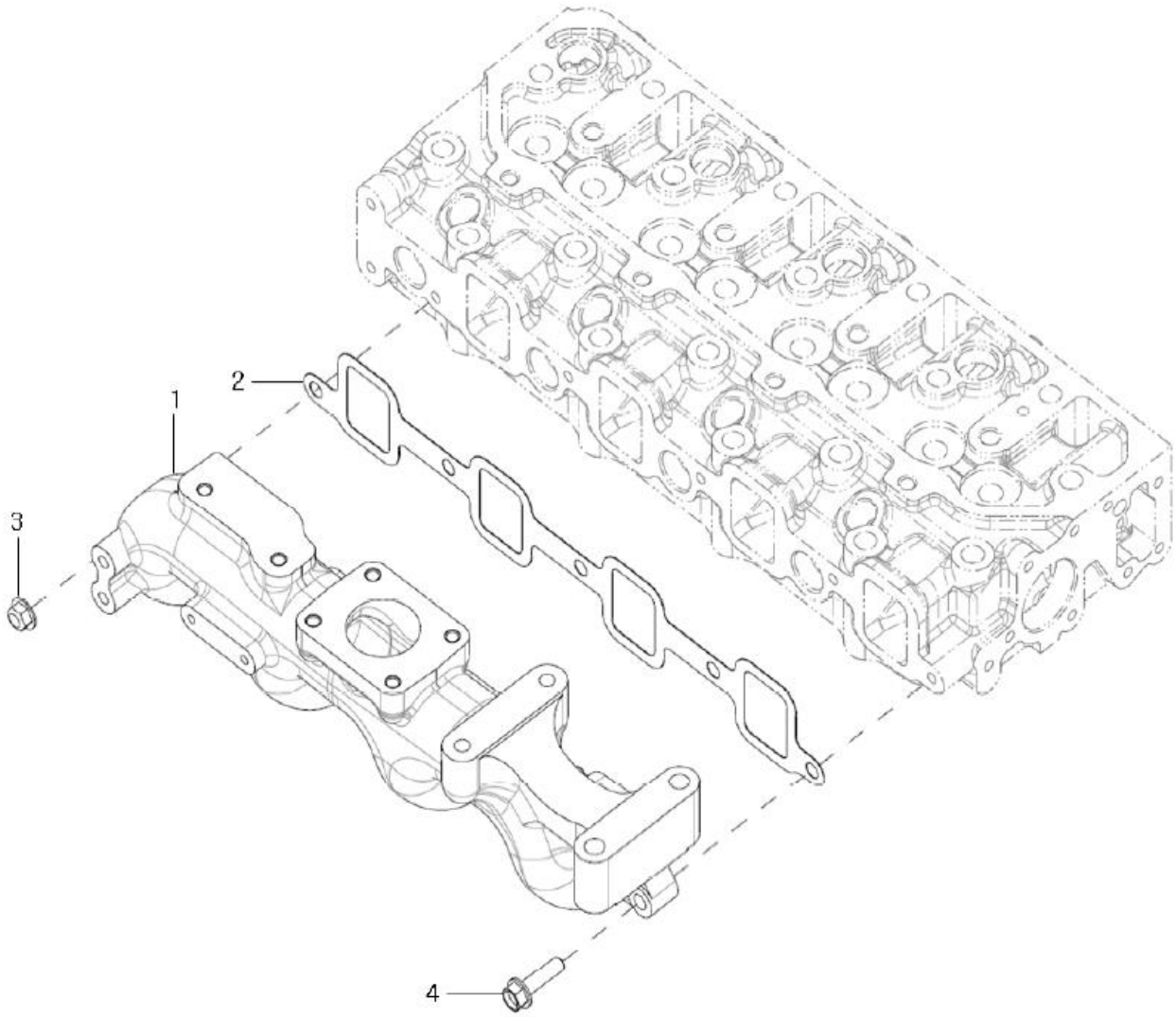

NOTE

https://truckmanualshub.com/

FIG 115B

T574ST / T574NC / T494ST / T494NC

INTAKE MANIFOLD (T494)

P2

YEAR

2018

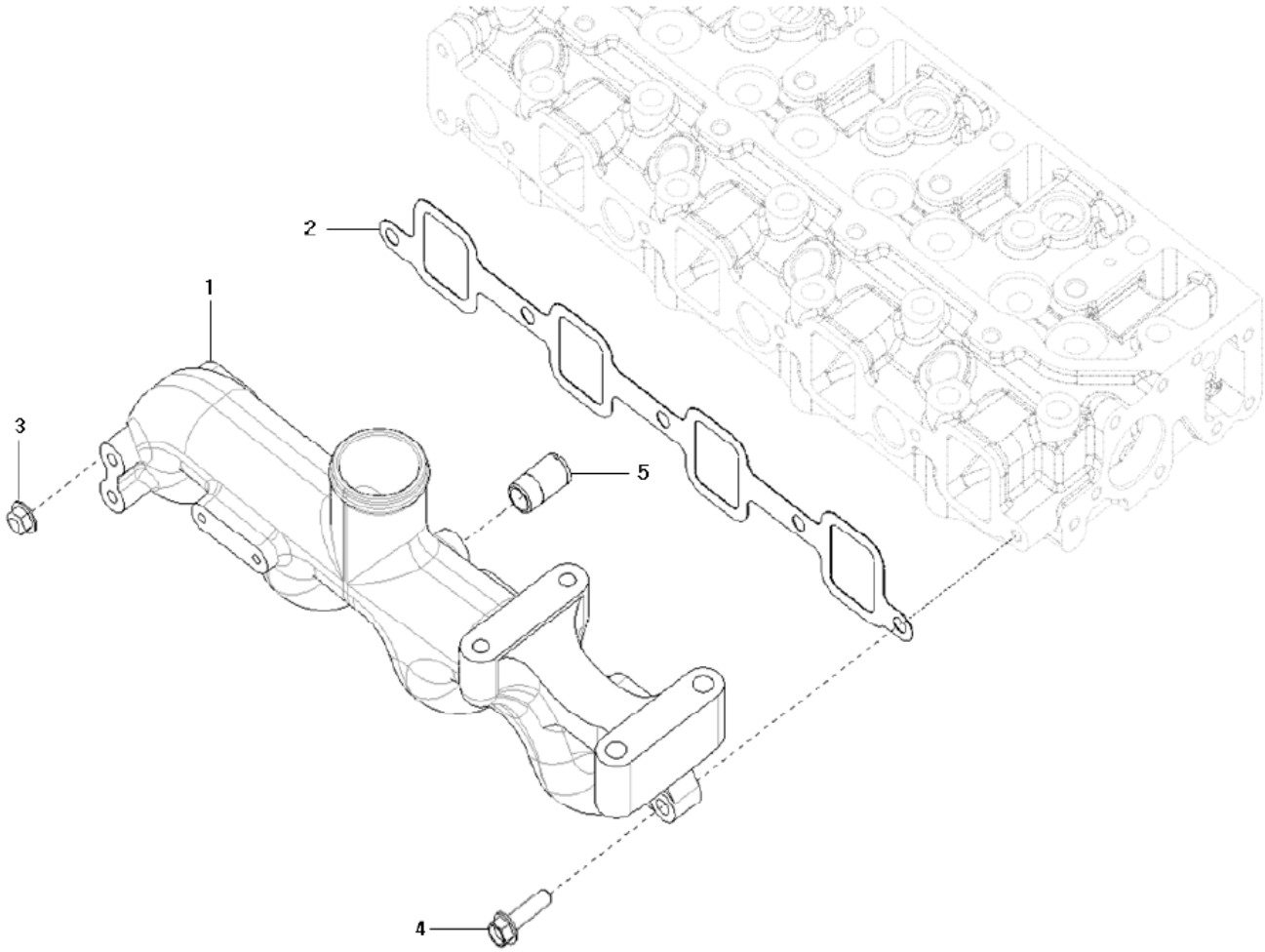

NOTE

https://truckmanualshub.com/

FIG 116A

T574ST / T574NC / T494ST / T494NC

EXHAUST MANIFOLD (T574)

P1

YEAR

2018

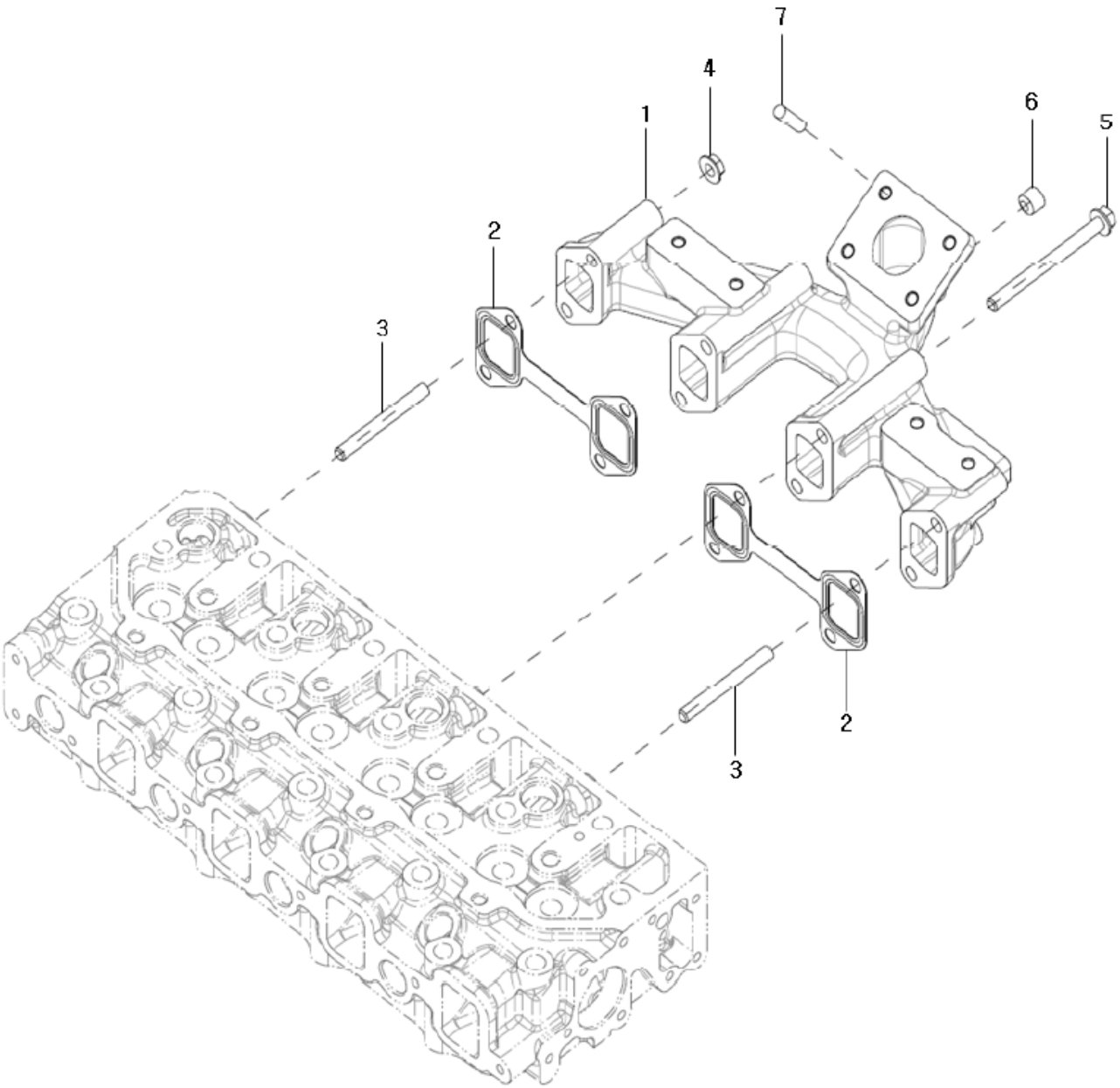

NOTE

https://truckmanualshub.com/

FIG 116B T574ST / T574NC / T494ST / T494NC	EXHAUST MANIFOLD (T494)	P2	YEAR 2018	

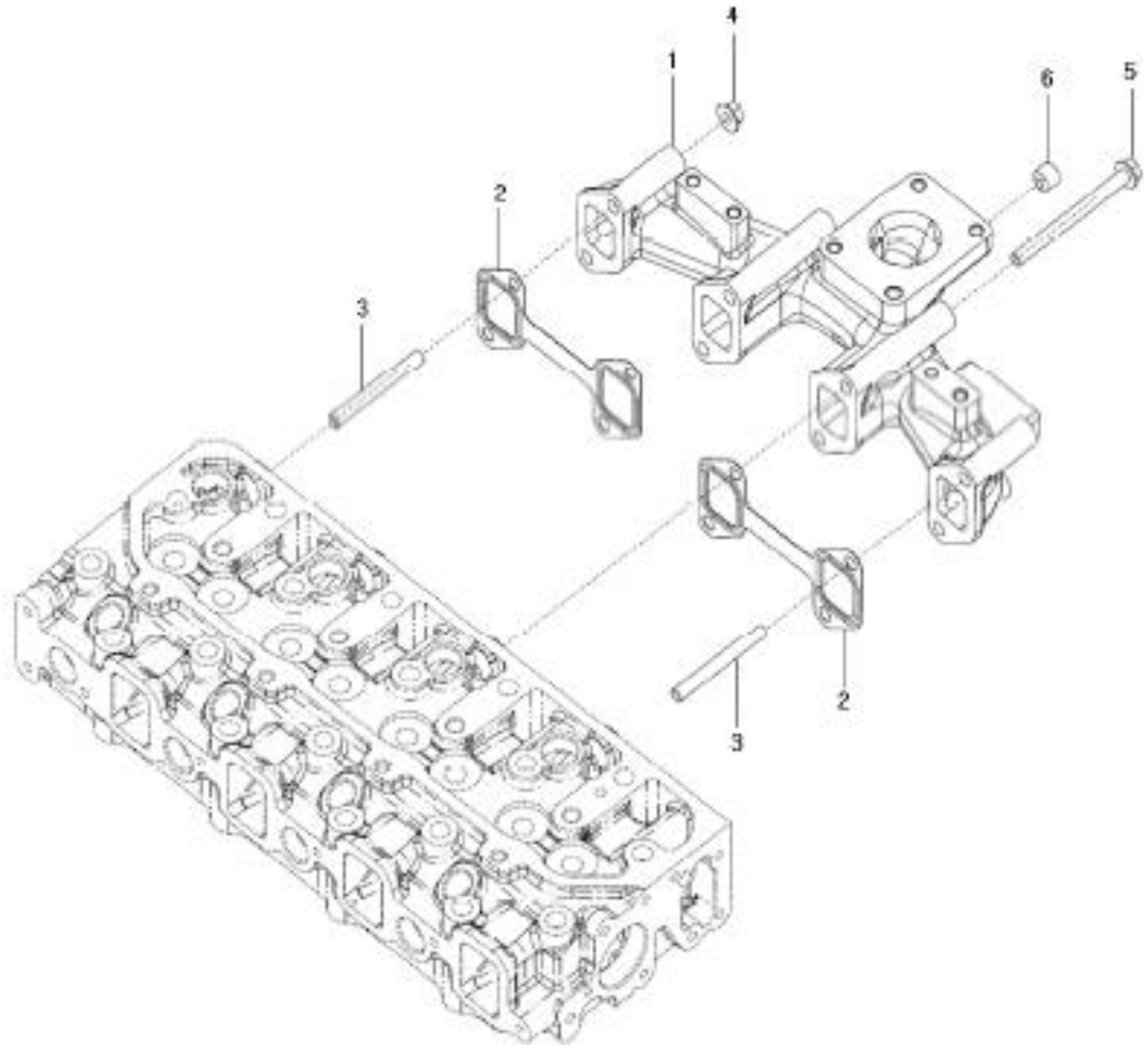

NOTE

https://truckmanualshub.com/

FIG 117A T574ST / T574NC / T494ST / T494NC	TURBOCHARGER ASS'Y (T574)	P1	YEAR 2018	

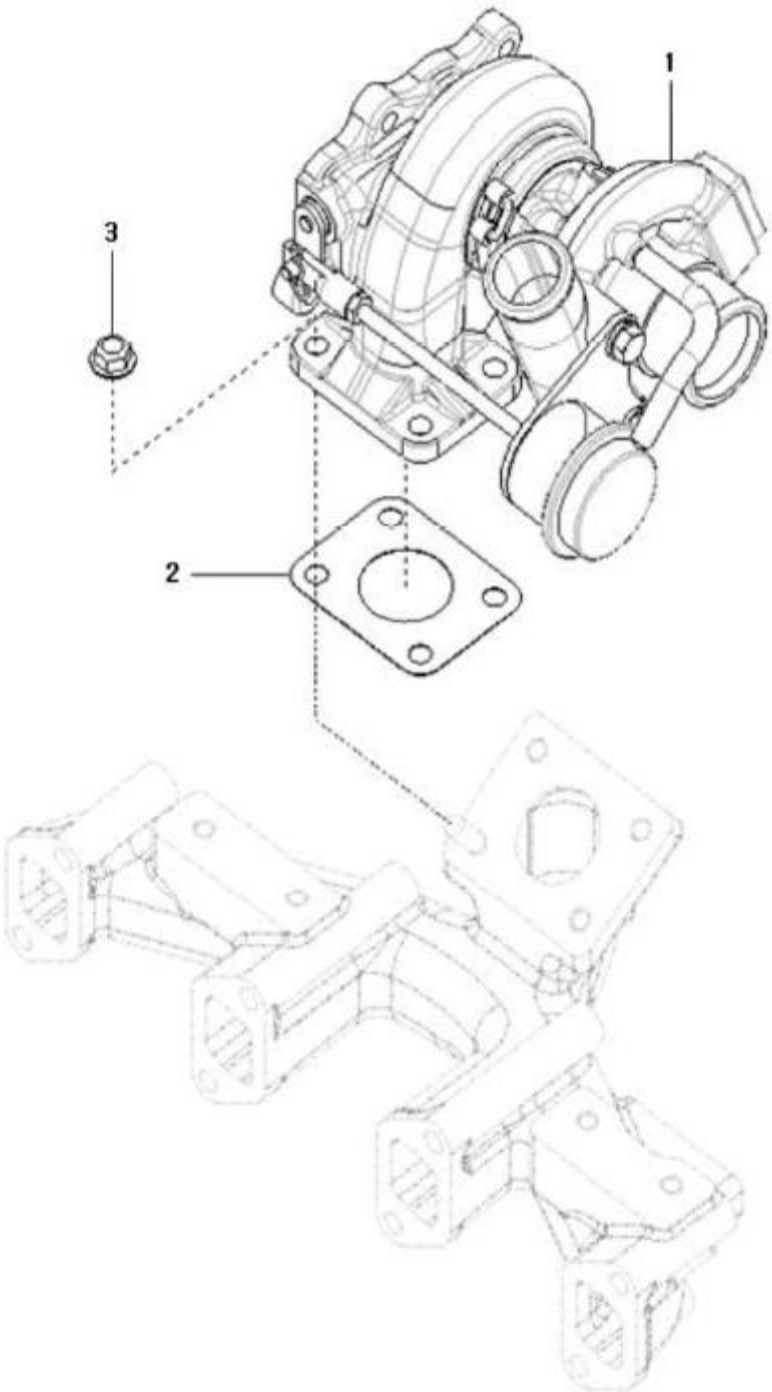

NOTE	

https://truckmanualshub.com/

FIG 117B

T574ST / T574NC / T494ST / T494NC

DPF SUPPORT OPTION (T494)

P2

YEAR

2018

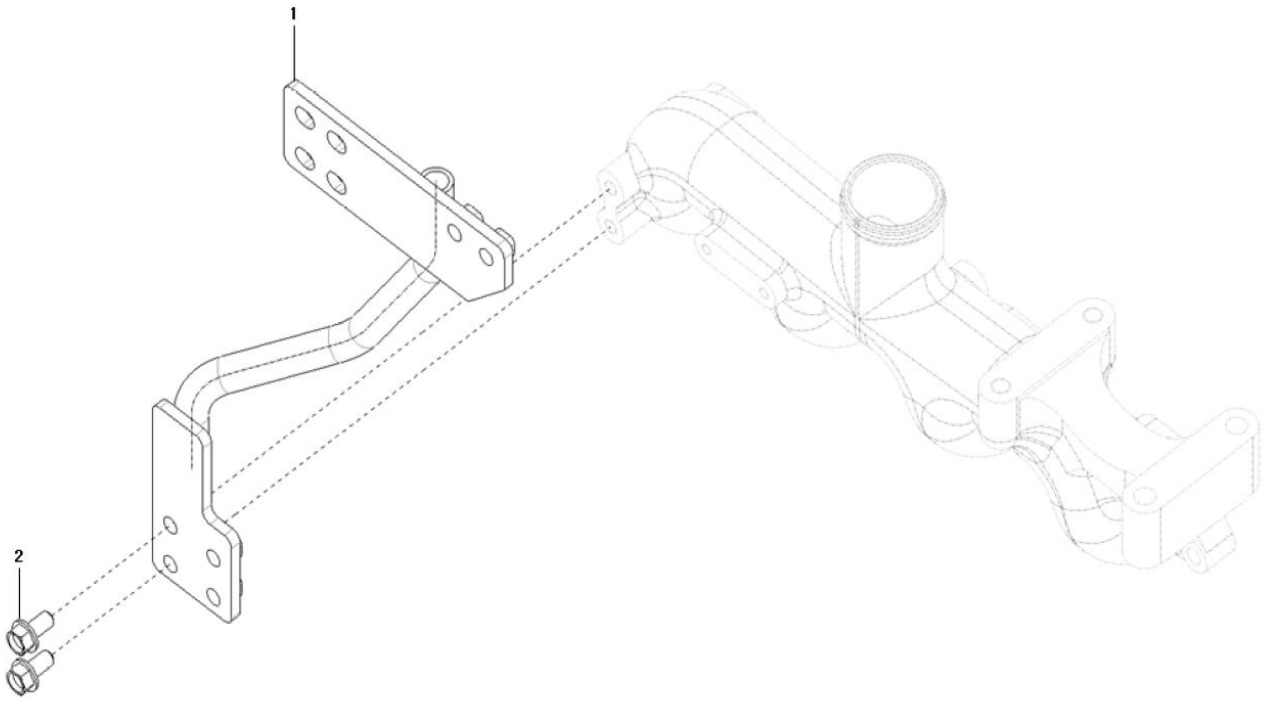

NOTE

https://truckmanualshub.com/

FIG 118A T574ST / T574NC / T494ST / T494NC	TURBOCHARGER PLUMBING OPTION(T574)	P1	YEAR 2018	

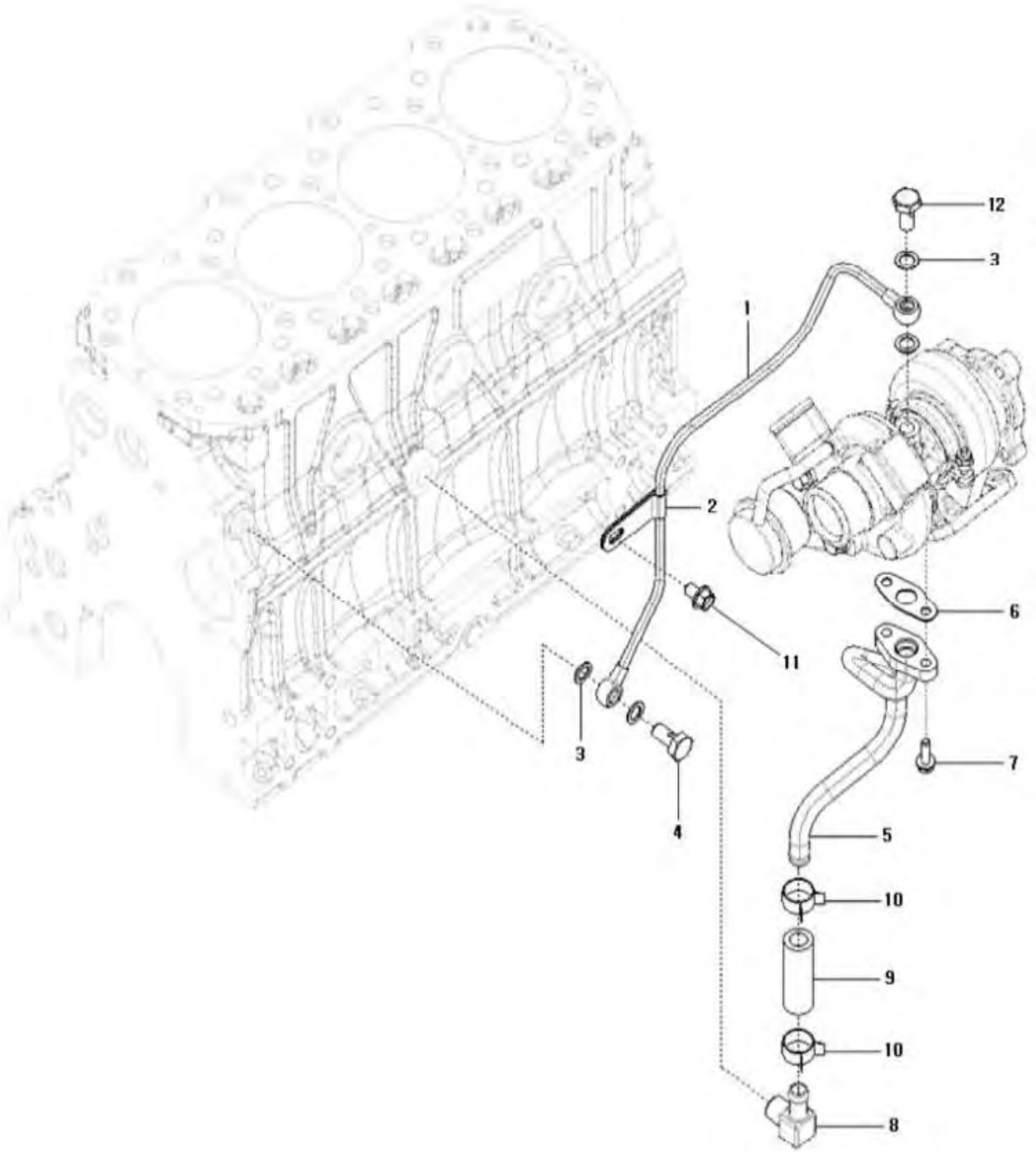

NOTE	

https://truckmanualshub.com/

FIG 118B T574ST / T574NC / T494ST / T494NC	TURBOCHARGER PLUMBING OPTION(T494)	P2	YEAR 2018	

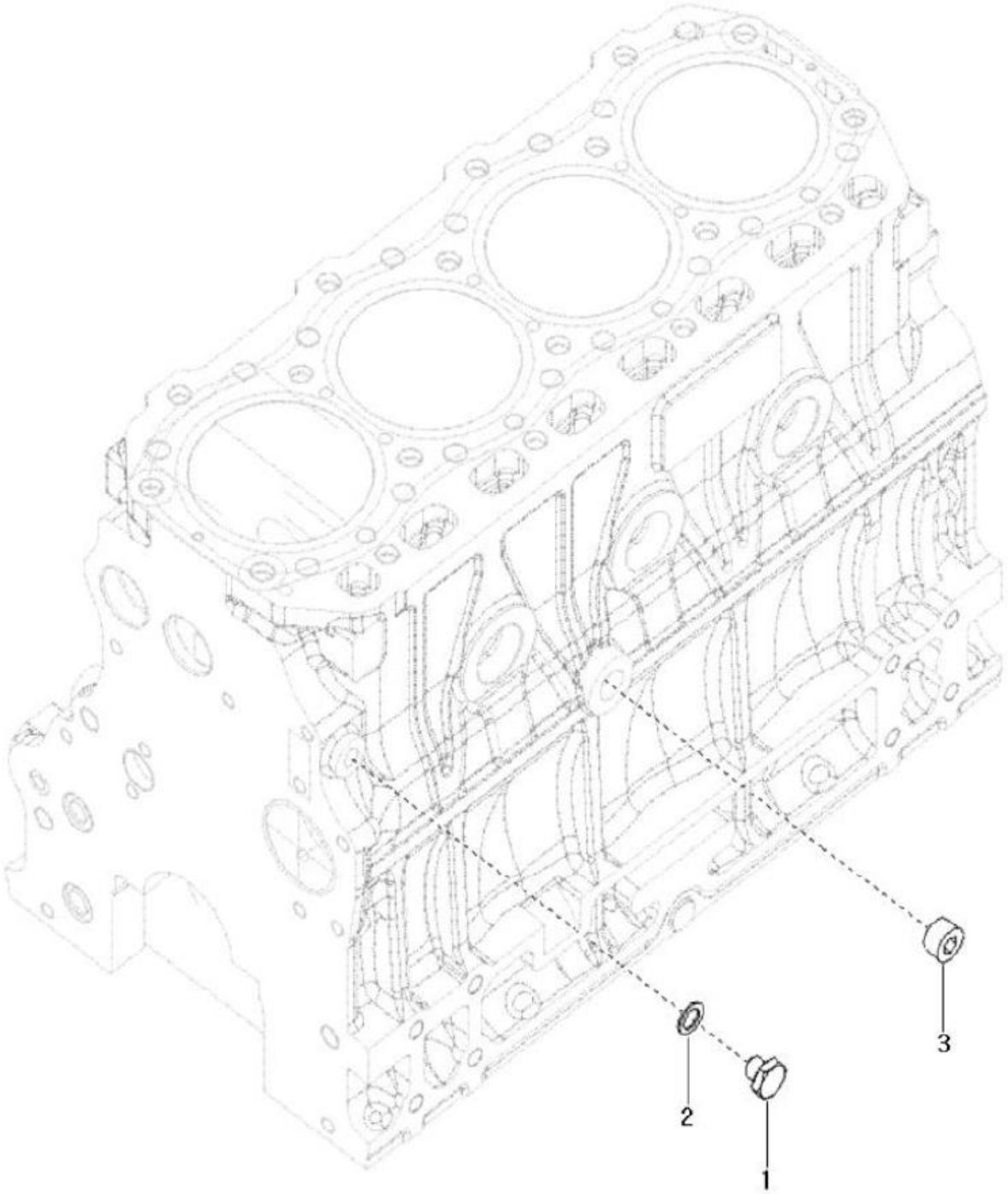

NOTE	

https://truckmanualshub.com/

FIG 119A

T574ST / T574NC / T494ST / T494NC

BREATHER (T574)

P1

YEAR

2018

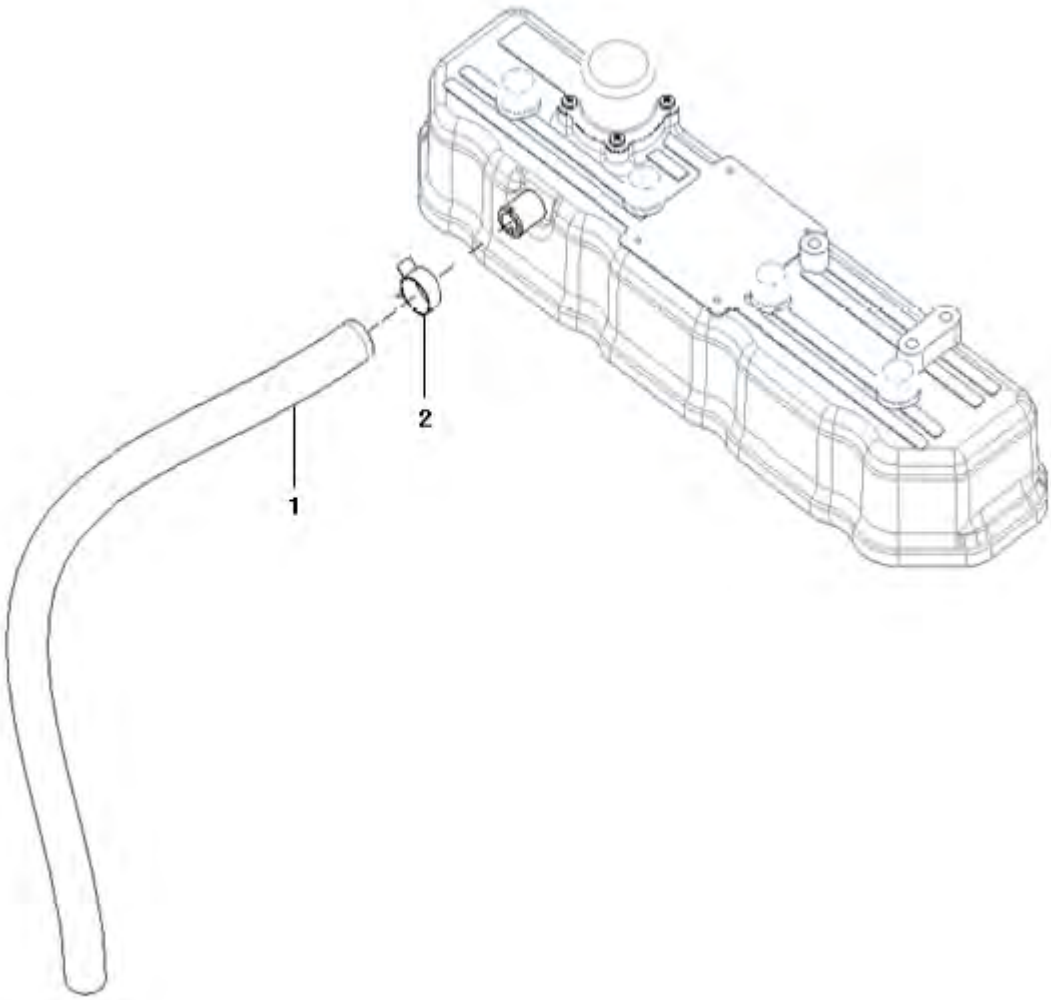

NOTE

https://truckmanualshub.com/

FIG 119B

T574ST / T574NC / T494ST / T494NC

BREATHER (T494)

P2

YEAR

2018

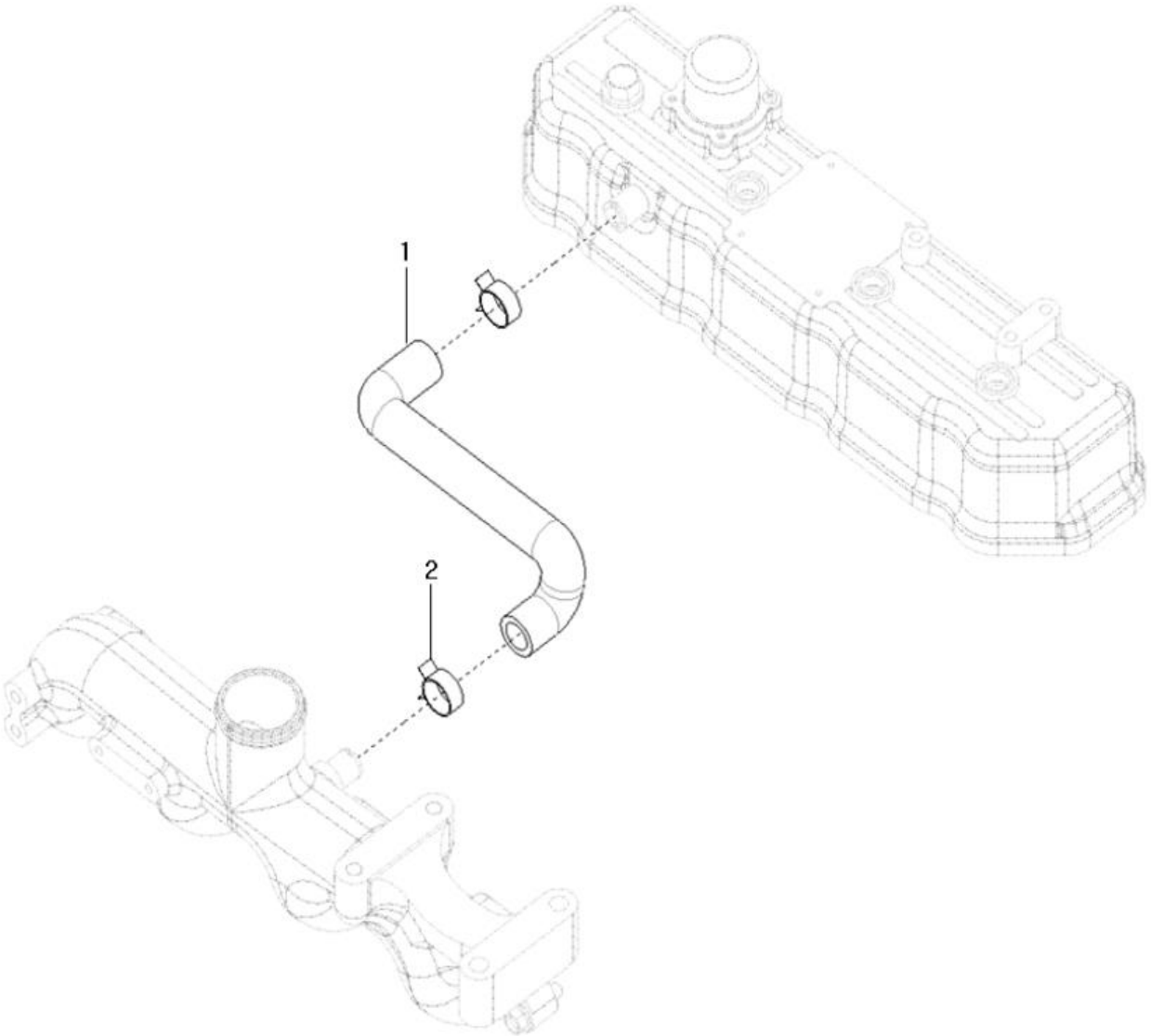

NOTE

https://truckmanualshub.com/

FIG 120 T574ST / T574NC / T494ST / T494NC	FUEL INJECTION PUMP	P1	YEAR 2018	

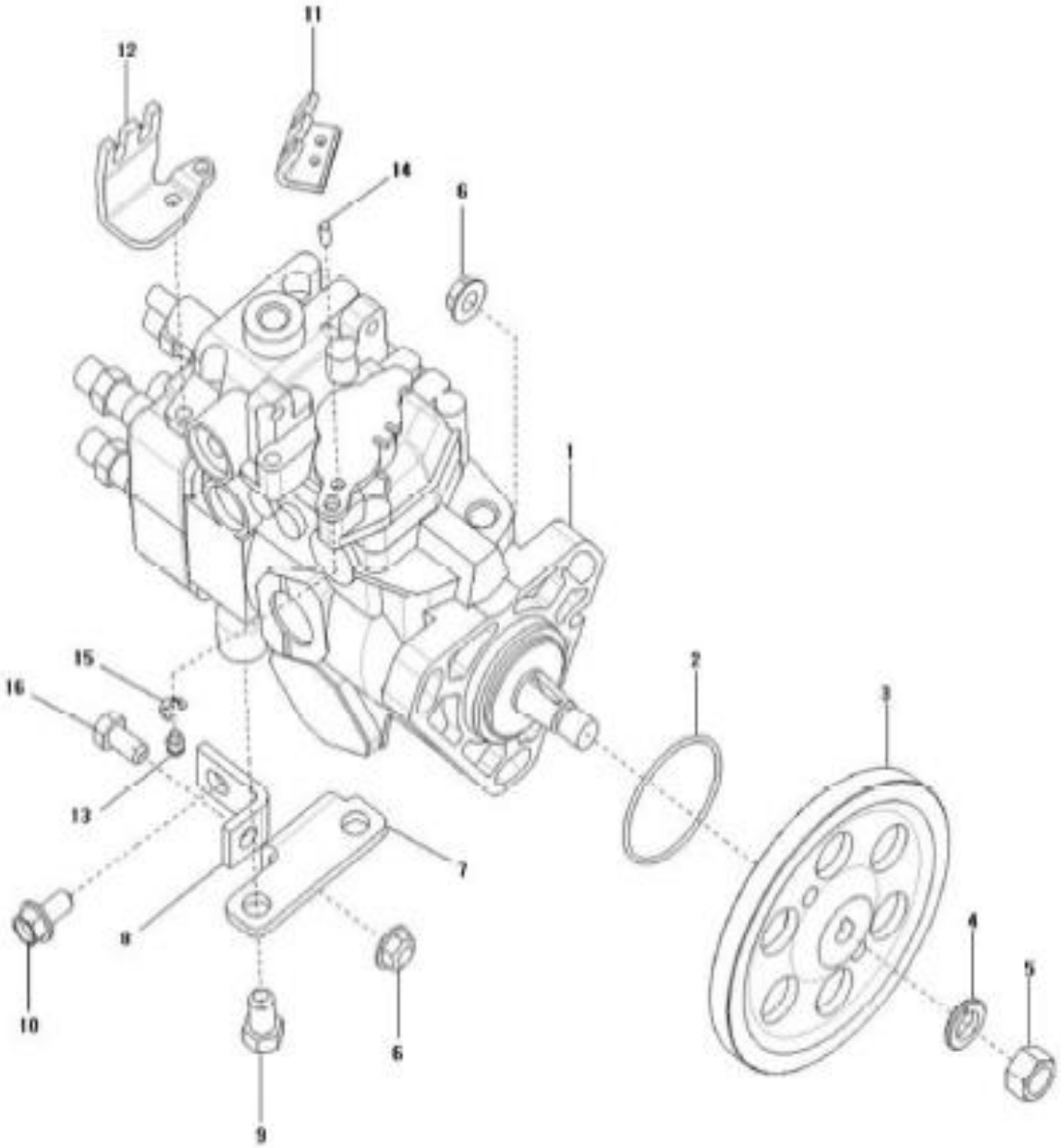

NOTE

https://truckmanualshub.com/

FIG 121

T574ST / T574NC / T494ST / T494NC

FUEL INJECTION VALVE

P1

YEAR

2018

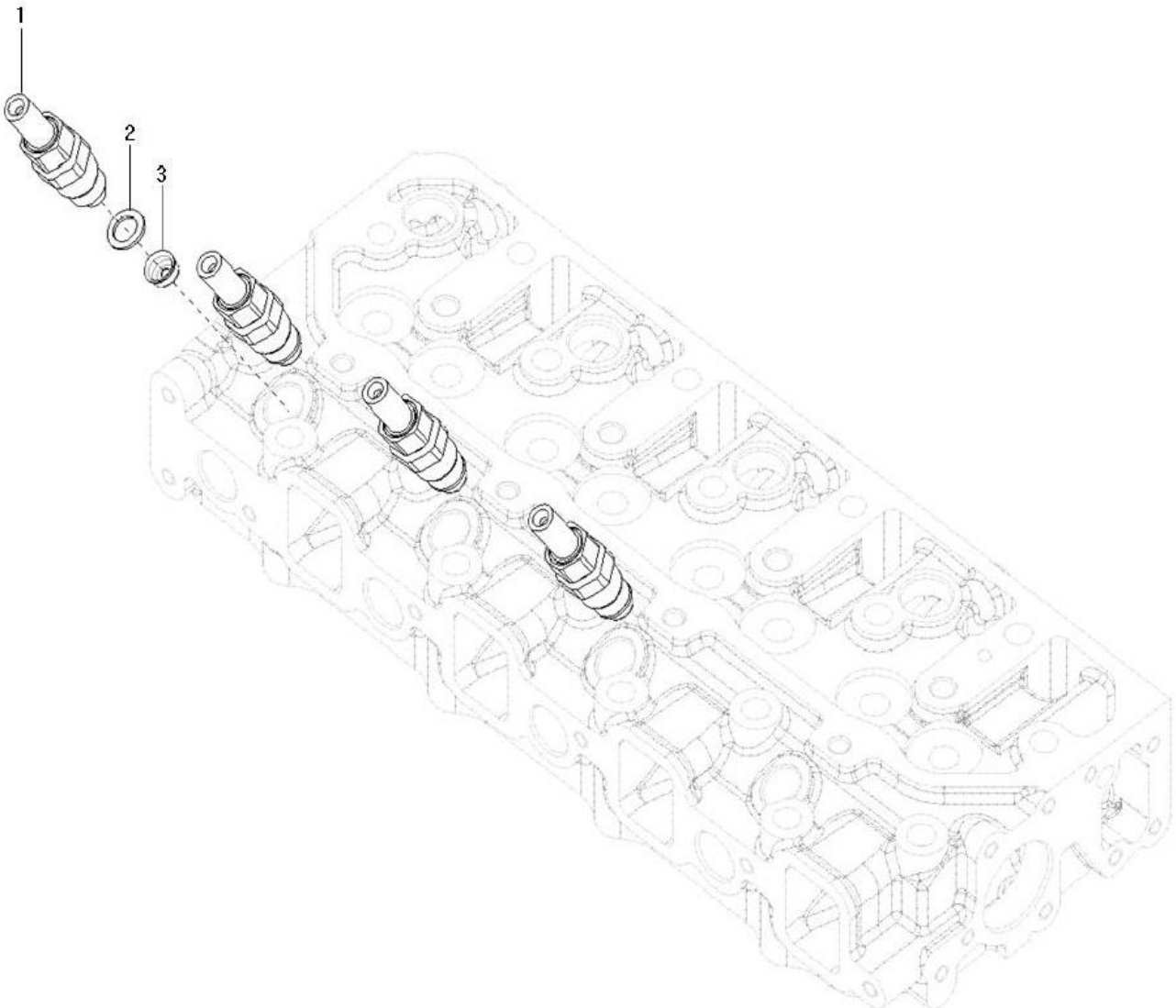

NOTE

https://truckmanualshub.com/

FIG 122 T574ST / T574NC / T494ST / T494NC	FUEL PIPE ASS'Y	P1	YEAR 2018	

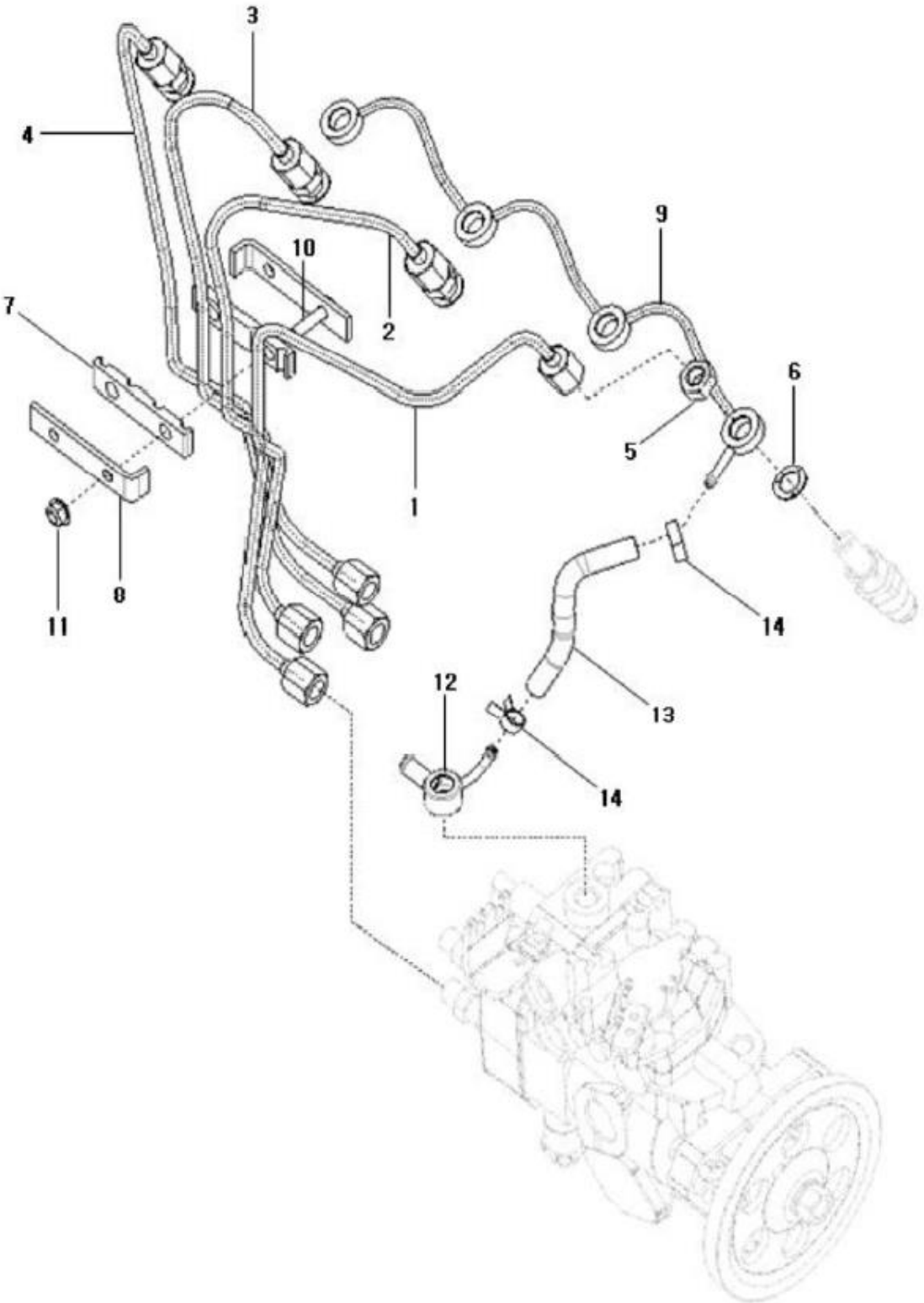

NOTE

https://truckmanualshub.com/

FIG 123 T574ST / T574NC / T494ST / T494NC	OIL FILTER	P1	YEAR 2018	

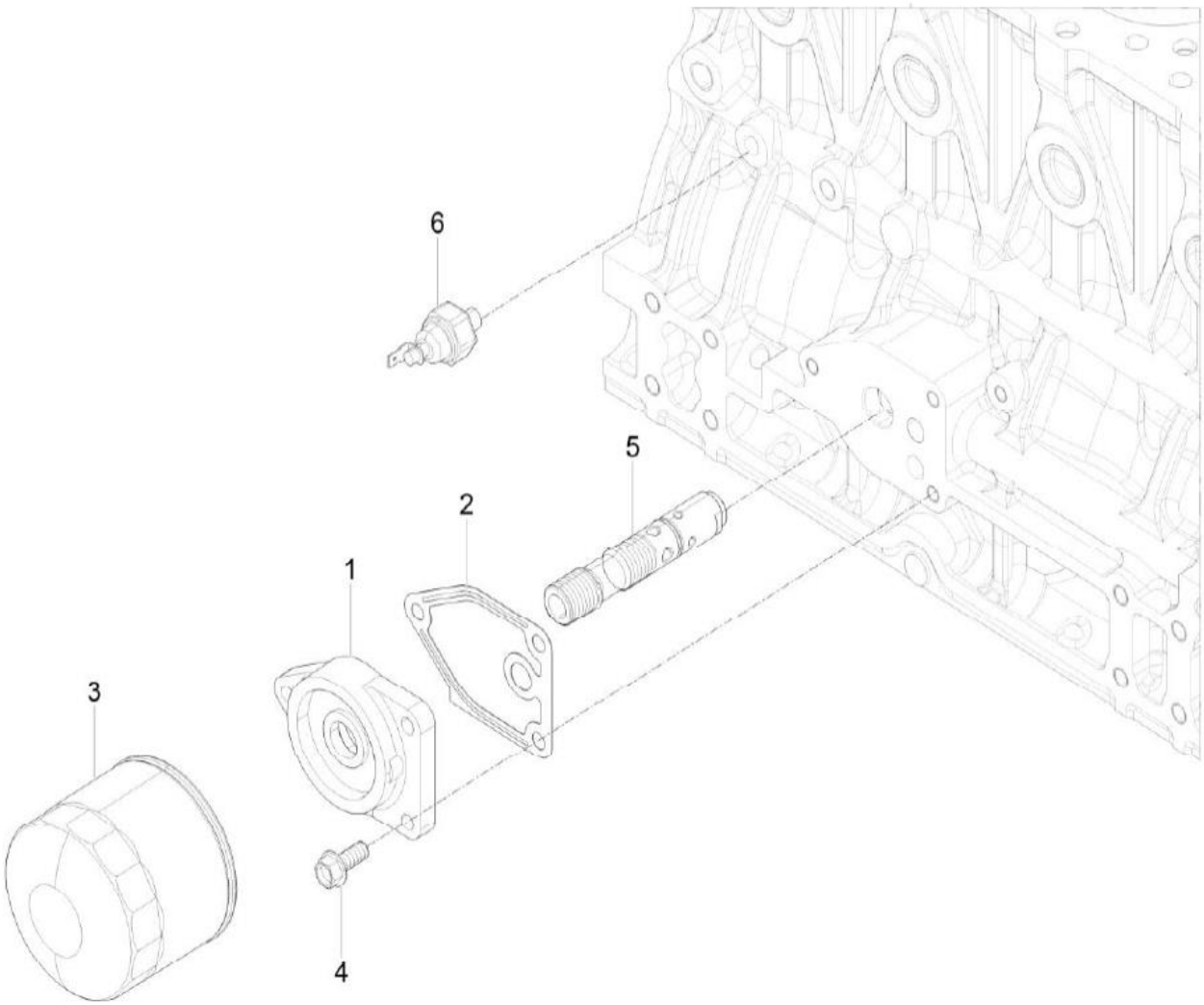

NOTE

https://truckmanualshub.com/

FIG 124

T574ST / T574NC / T494ST / T494NC

OIL COOLER

P1

YEAR

2018

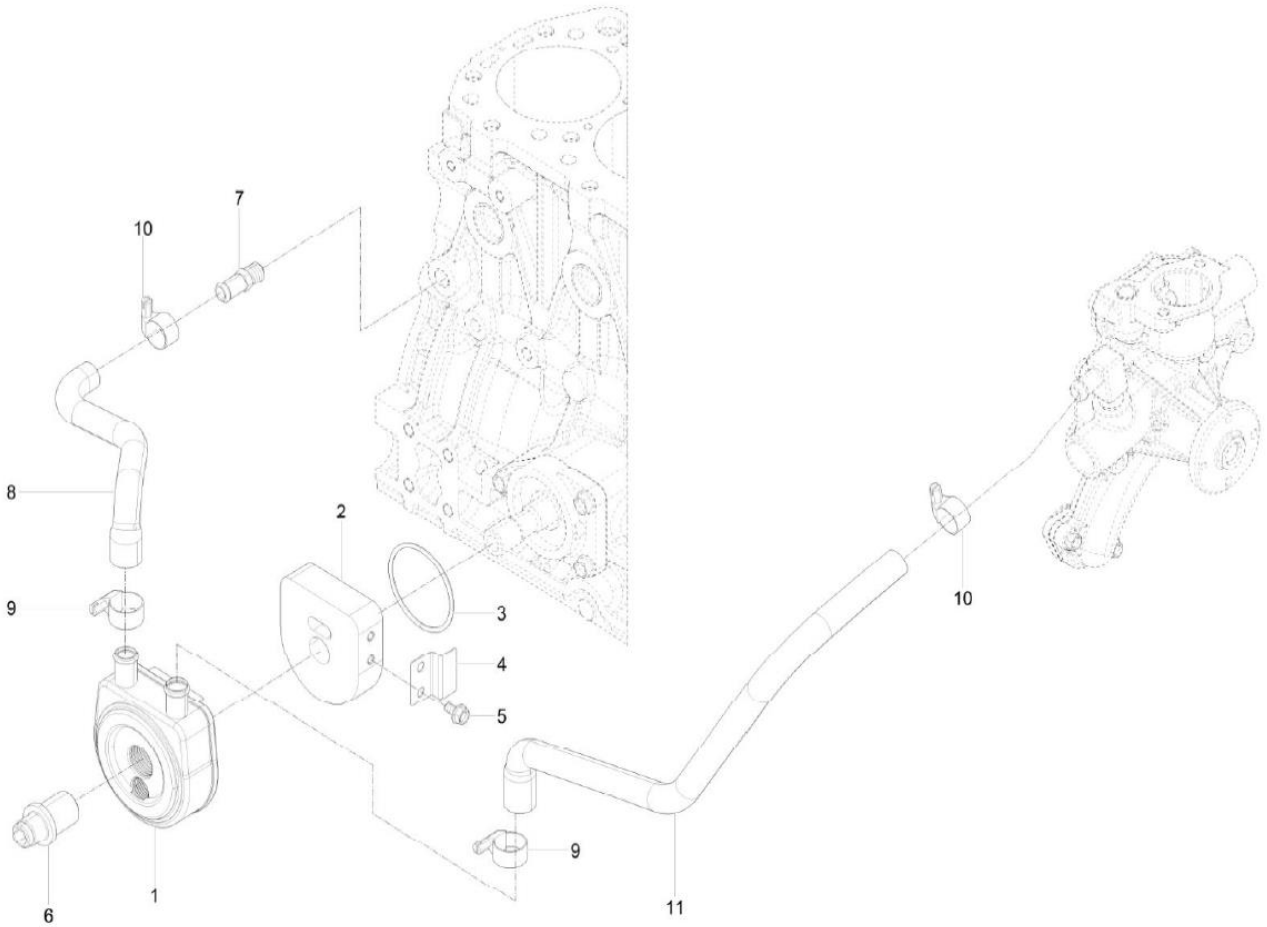

NOTE

https://truckmanualshub.com/

FIG 125 T574ST / T574NC / T494ST / T494NC	OIL GAUGE	P1	YEAR 2018	

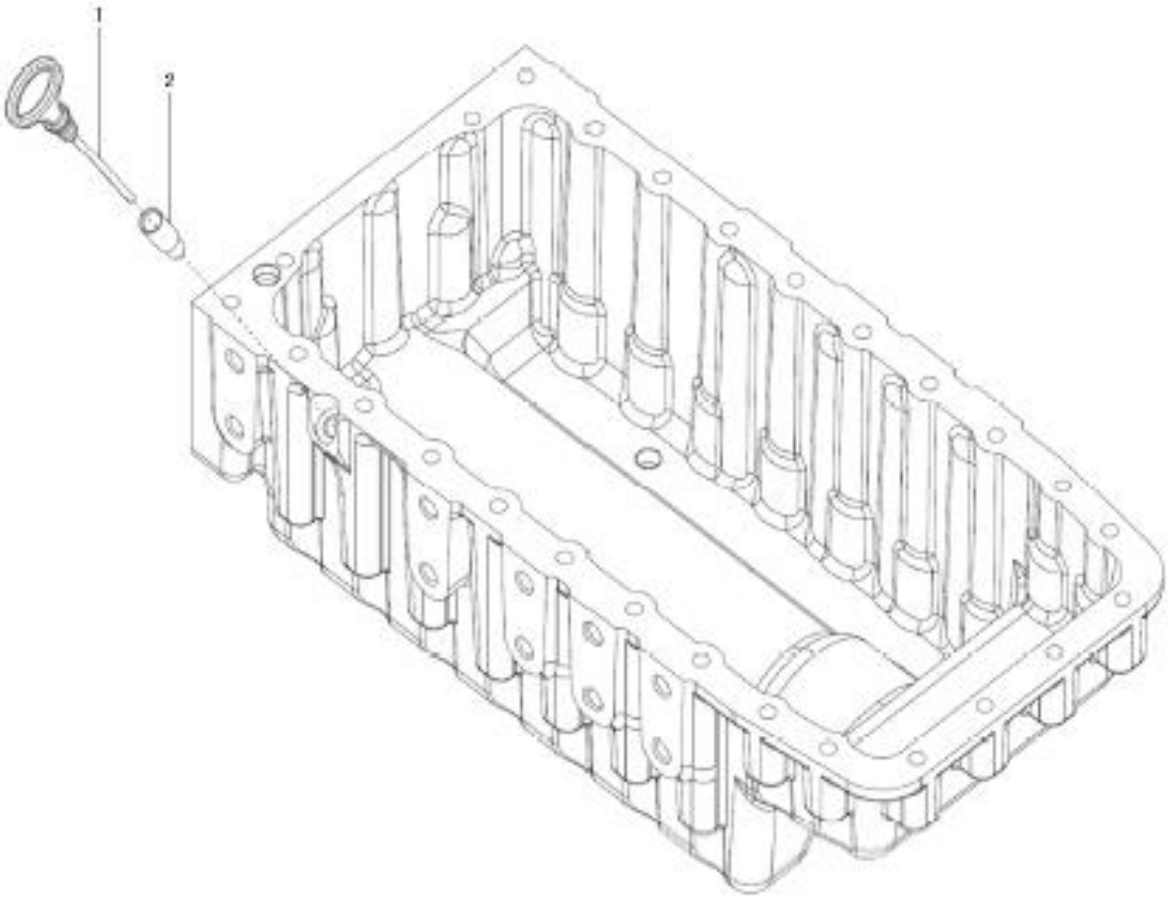

NOTE	

https://truckmanualshub.com/

FIG 126 T574ST / T574NC / T494ST / T494NC	OIL FILLER CAP	P1	YEAR 2018	

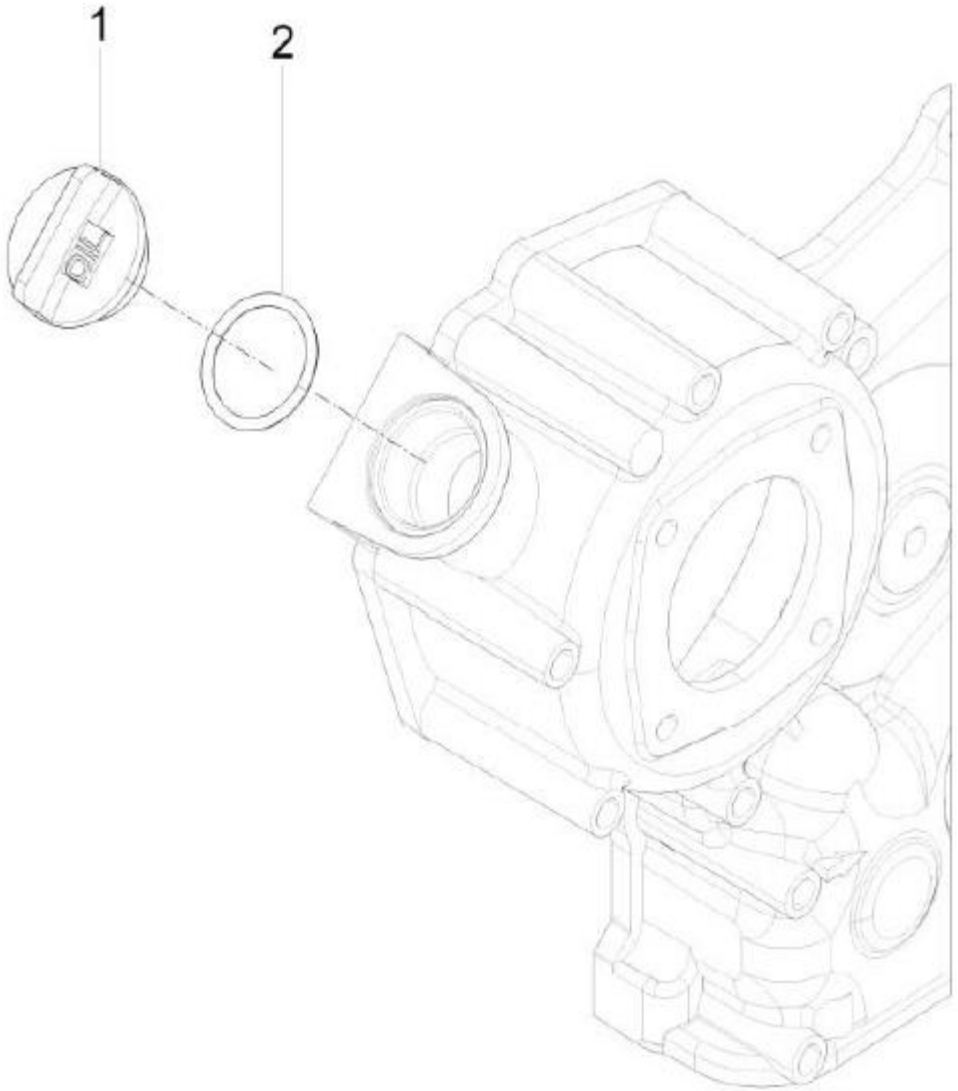

NOTE

https://truckmanualshub.com/

FIG 127 T574ST / T574NC / T494ST / T494NC	COOLING WATER PUMP	P1	YEAR 2018	

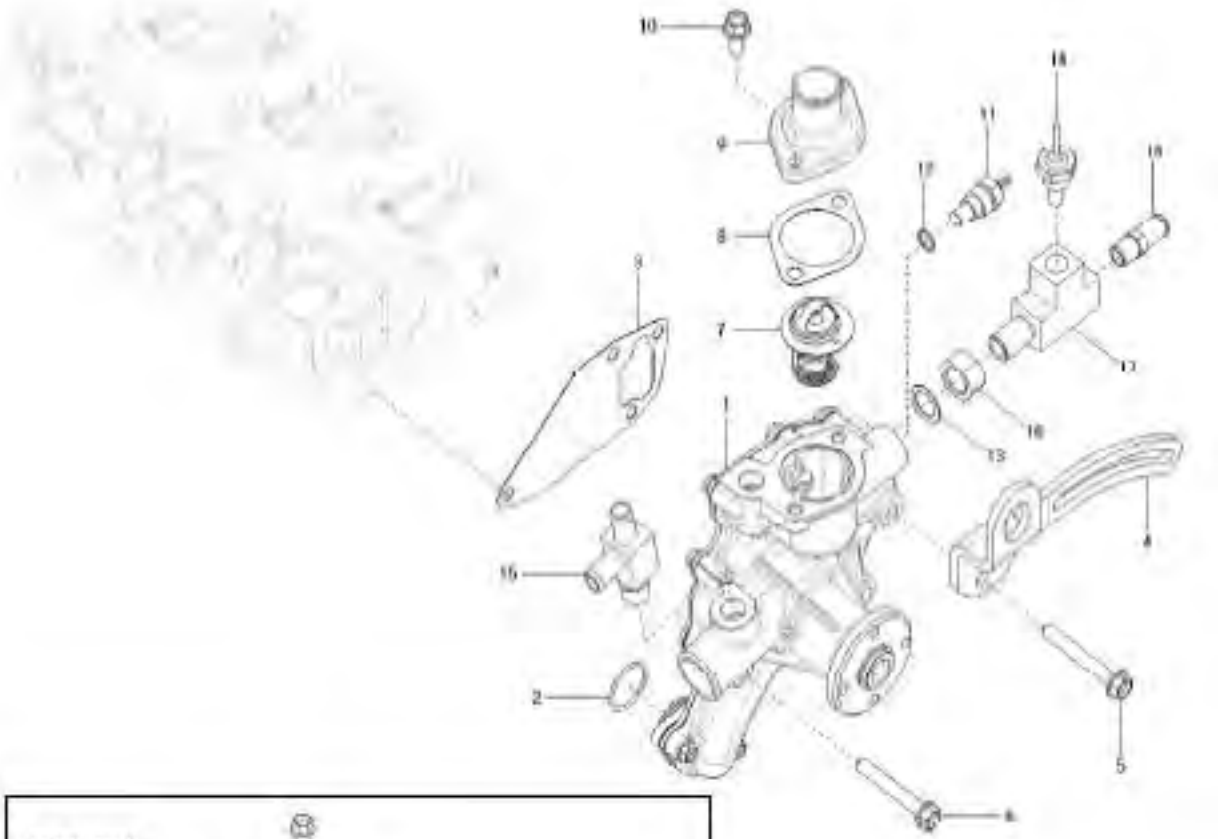

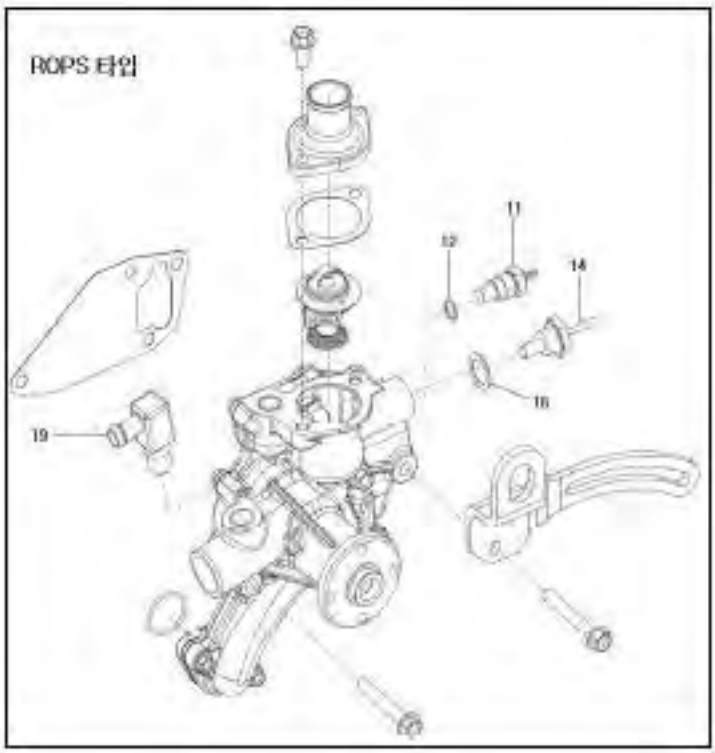

NOTE	

https://truckmanualshub.com/

FIG 128 T574ST / T574NC / T494ST / T494NC	CRANK SHAFT PULLEY	P1	YEAR 2018	

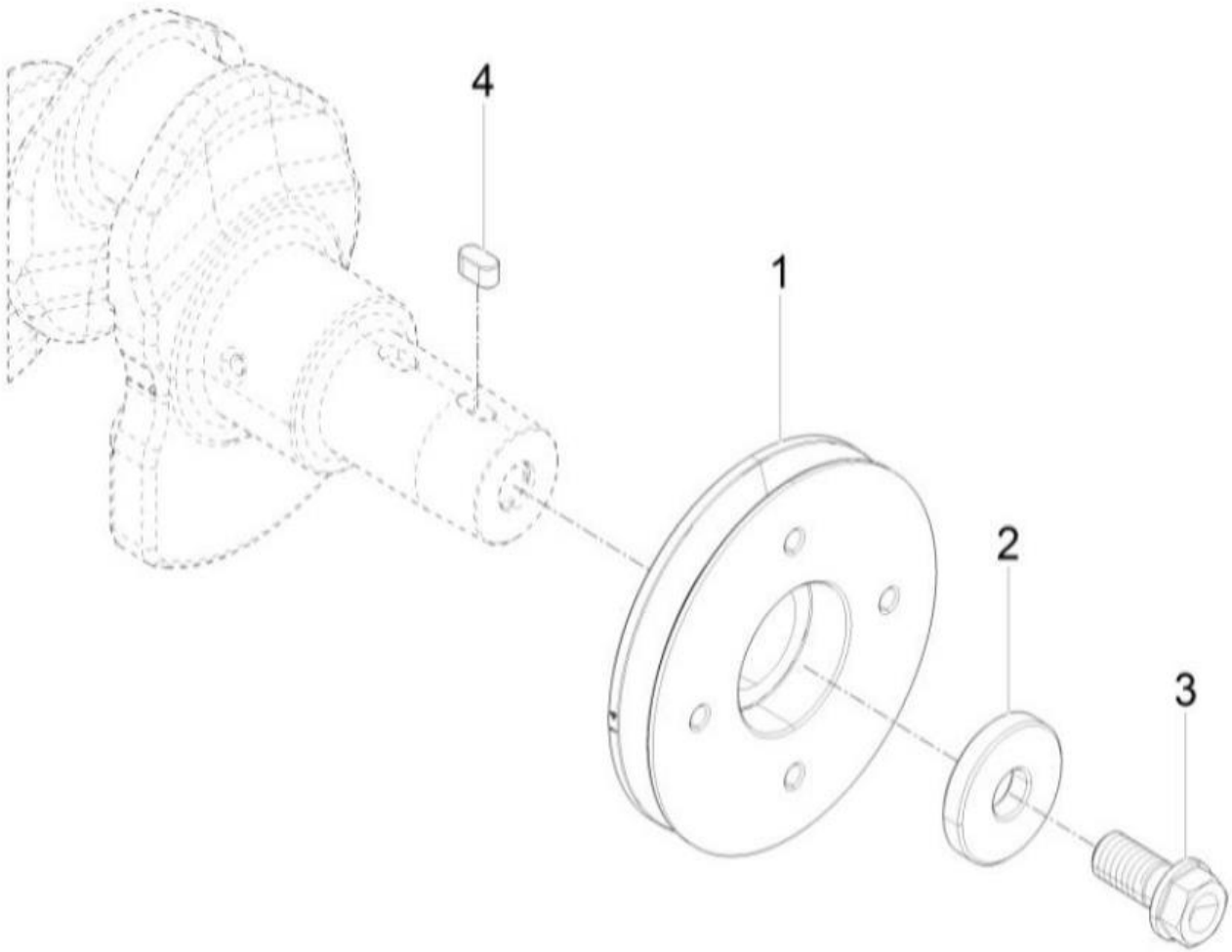

NOTE

https://truckmanualshub.com/

FIG 129

T574ST / T574NC / T494ST / T494NC

V-PULLEY

P1

YEAR

2018

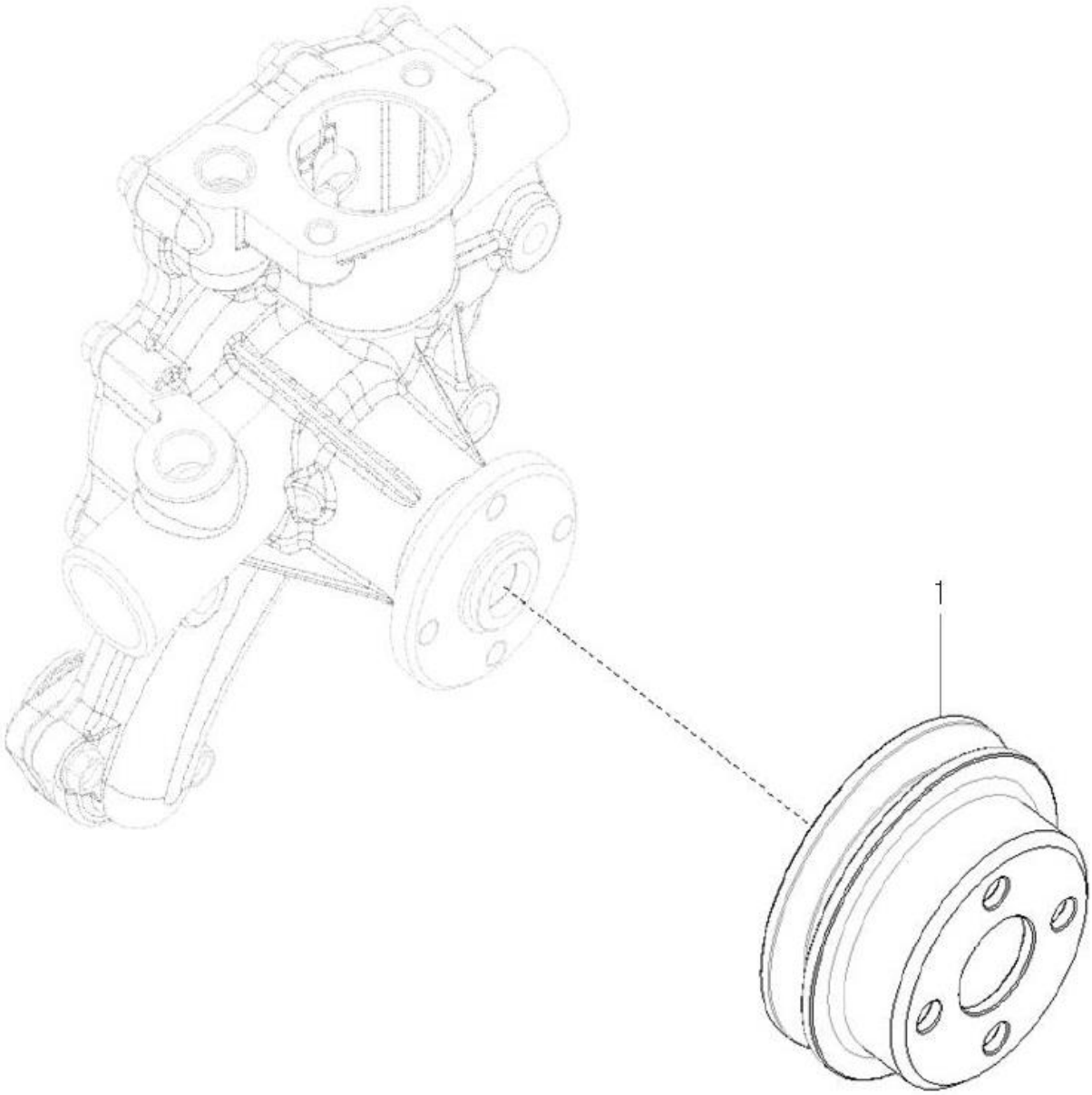

NOTE

https://truckmanualshub.com/

FIG 130 T574ST / T574NC / T494ST / T494NC	COOLING FAN	P1	YEAR 2018	

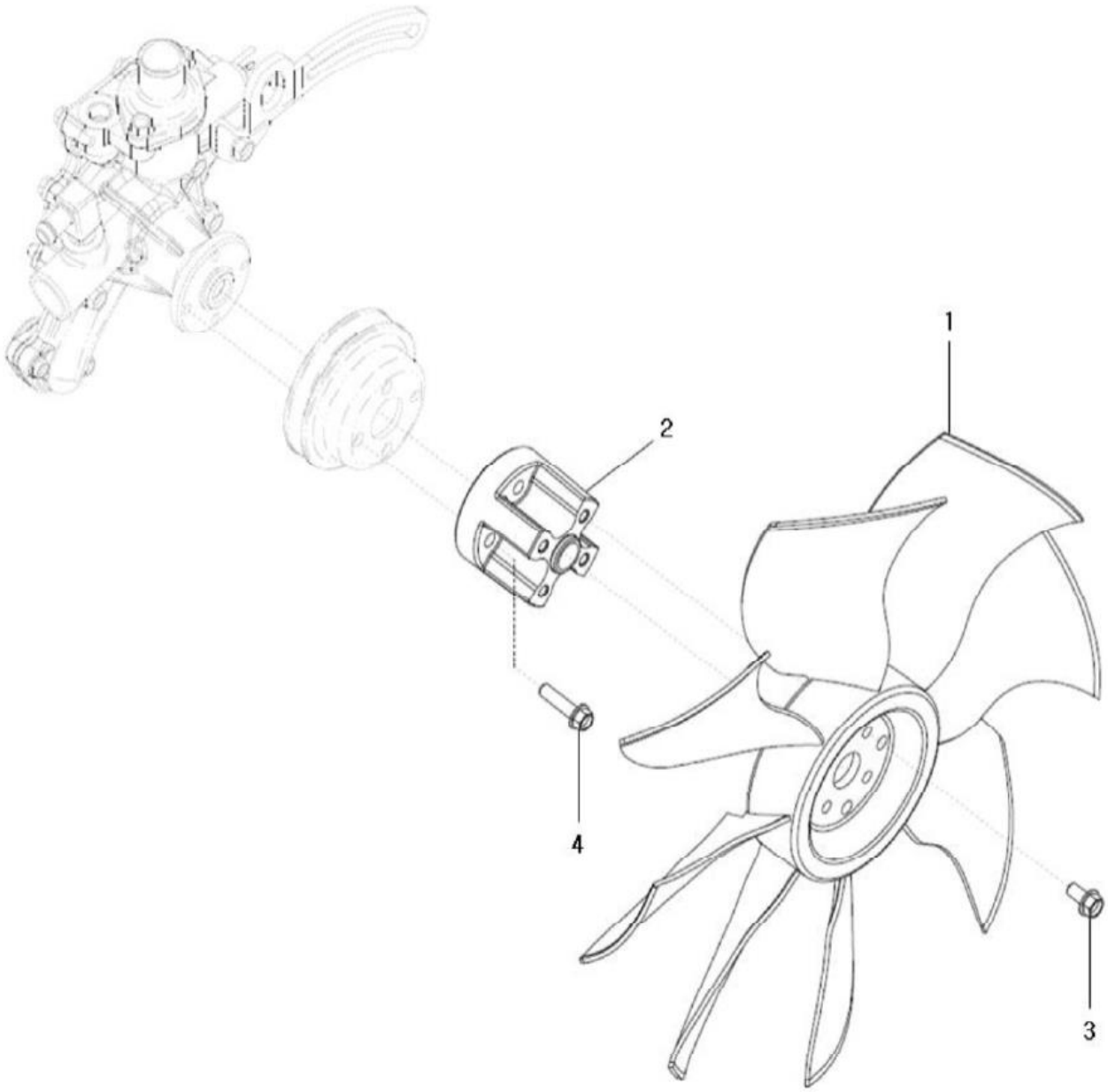

NOTE

https://truckmanualshub.com/

FIG 131

T574ST / T574NC / T494ST / T494NC

FLYWHEEL HOUSING

P1

YEAR

2018

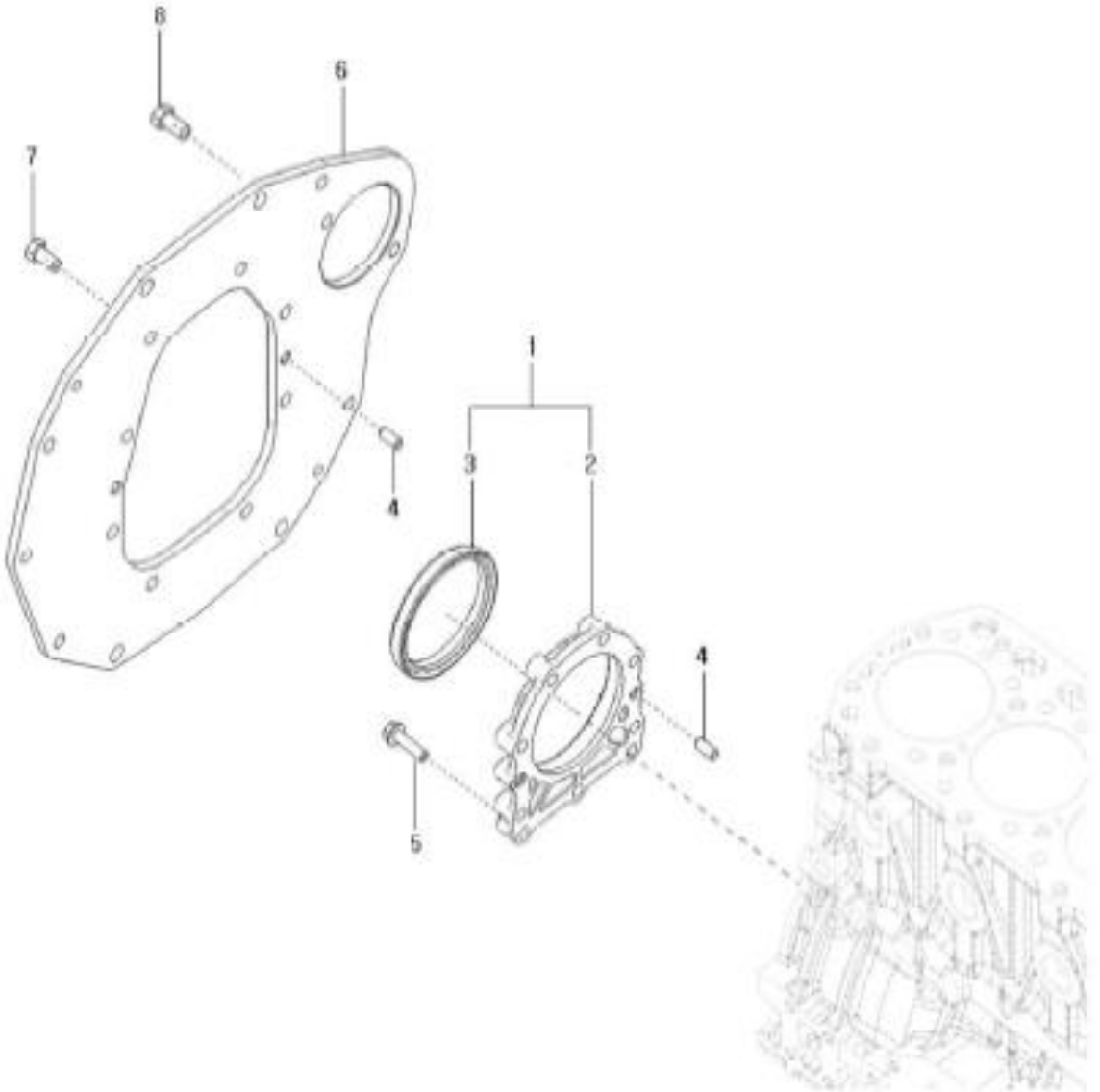

NOTE

https://truckmanualshub.com/

FIG 132

T574ST / T574NC / T494ST / T494NC

FLYWHEEL

P1

YEAR

2018

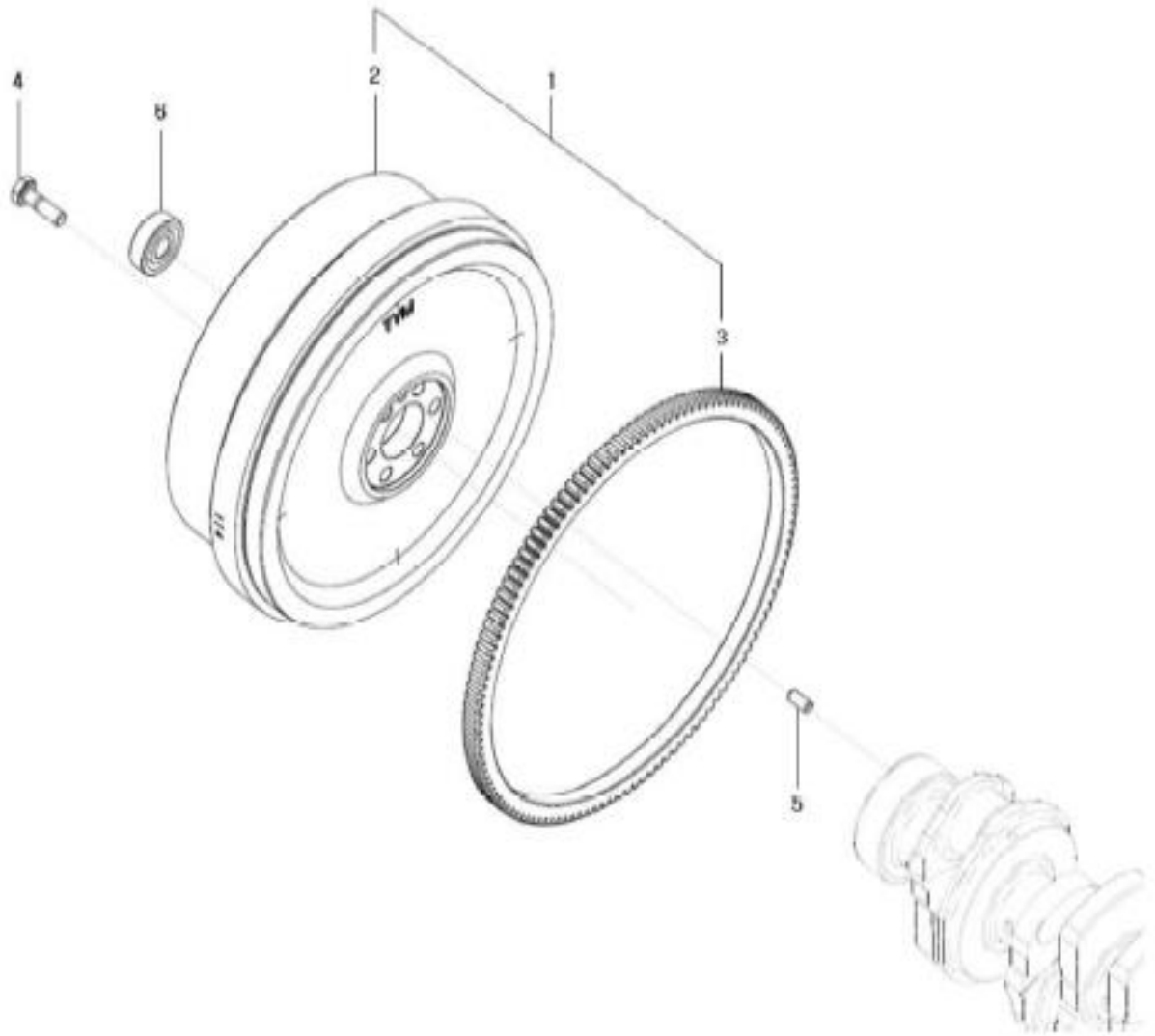

NOTE

https://truckmanualshub.com/

FIG 133 T574ST / T574NC / T494ST / T494NC	GLOW PLUG ASS'Y OPTION	P1	YEAR 2018	

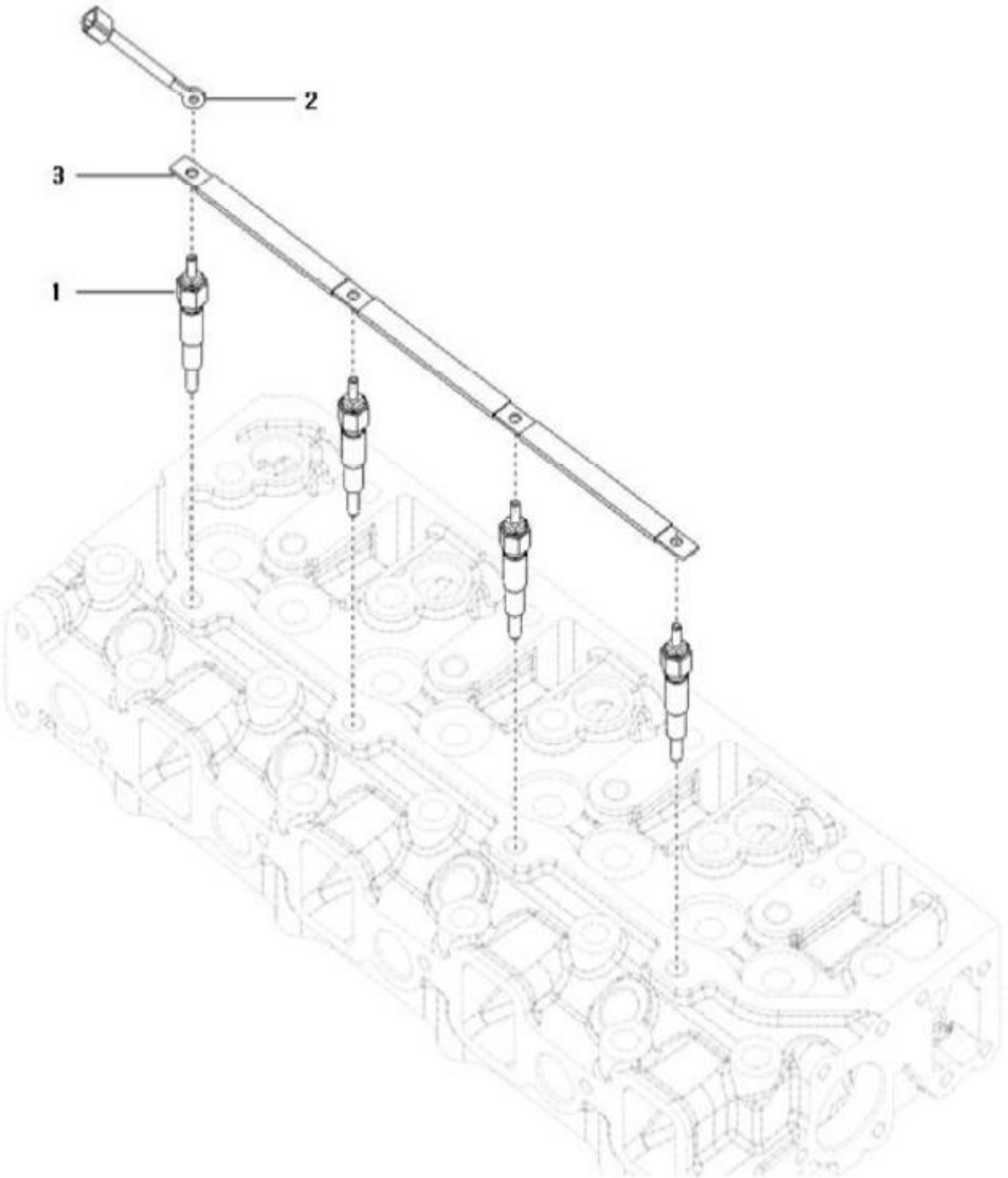

NOTE

https://truckmanualshub.com/

FIG 134

T574ST / T574NC / T494ST / T494NC

STARTING MOTOR

P1

YEAR

2018

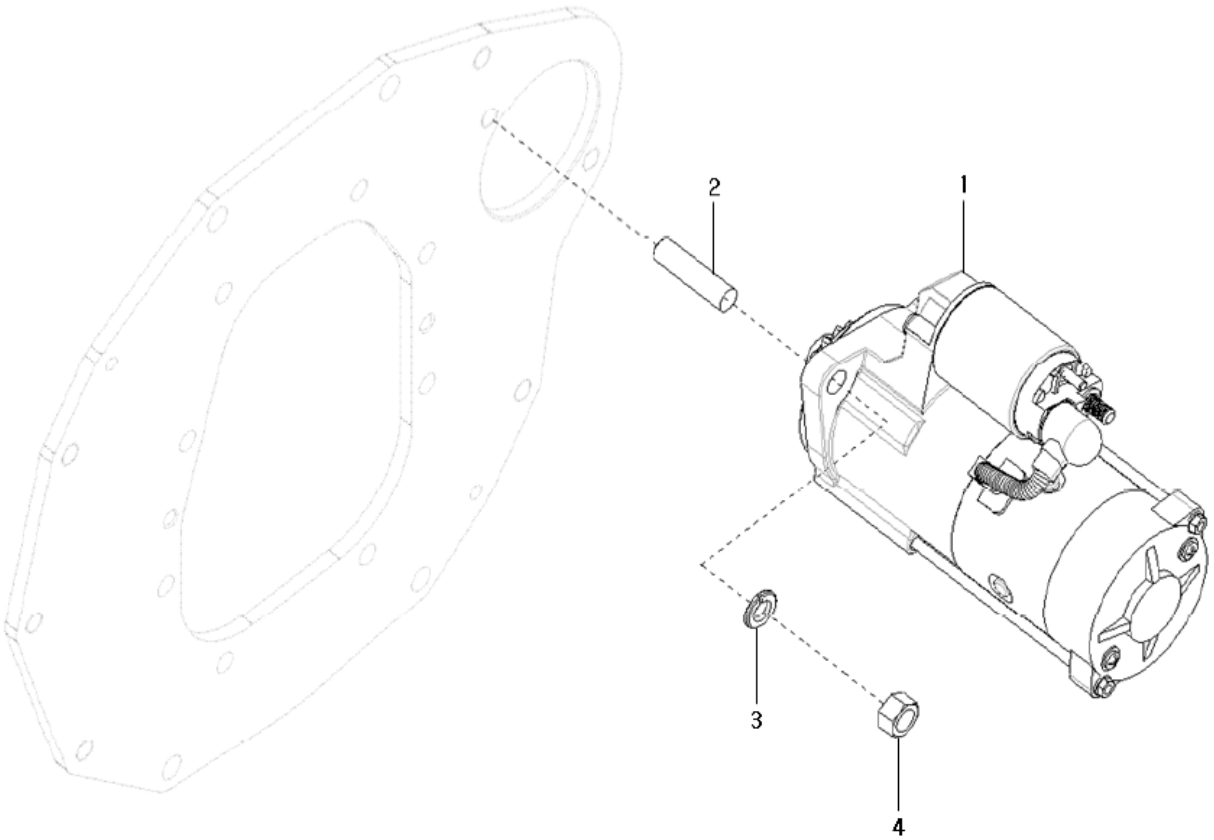

NOTE

https://truckmanualshub.com/

FIG 135 T574ST / T574NC / T494ST / T494NC	FUEL FILTER BRACKET ASS'Y	P1	YEAR 2018	

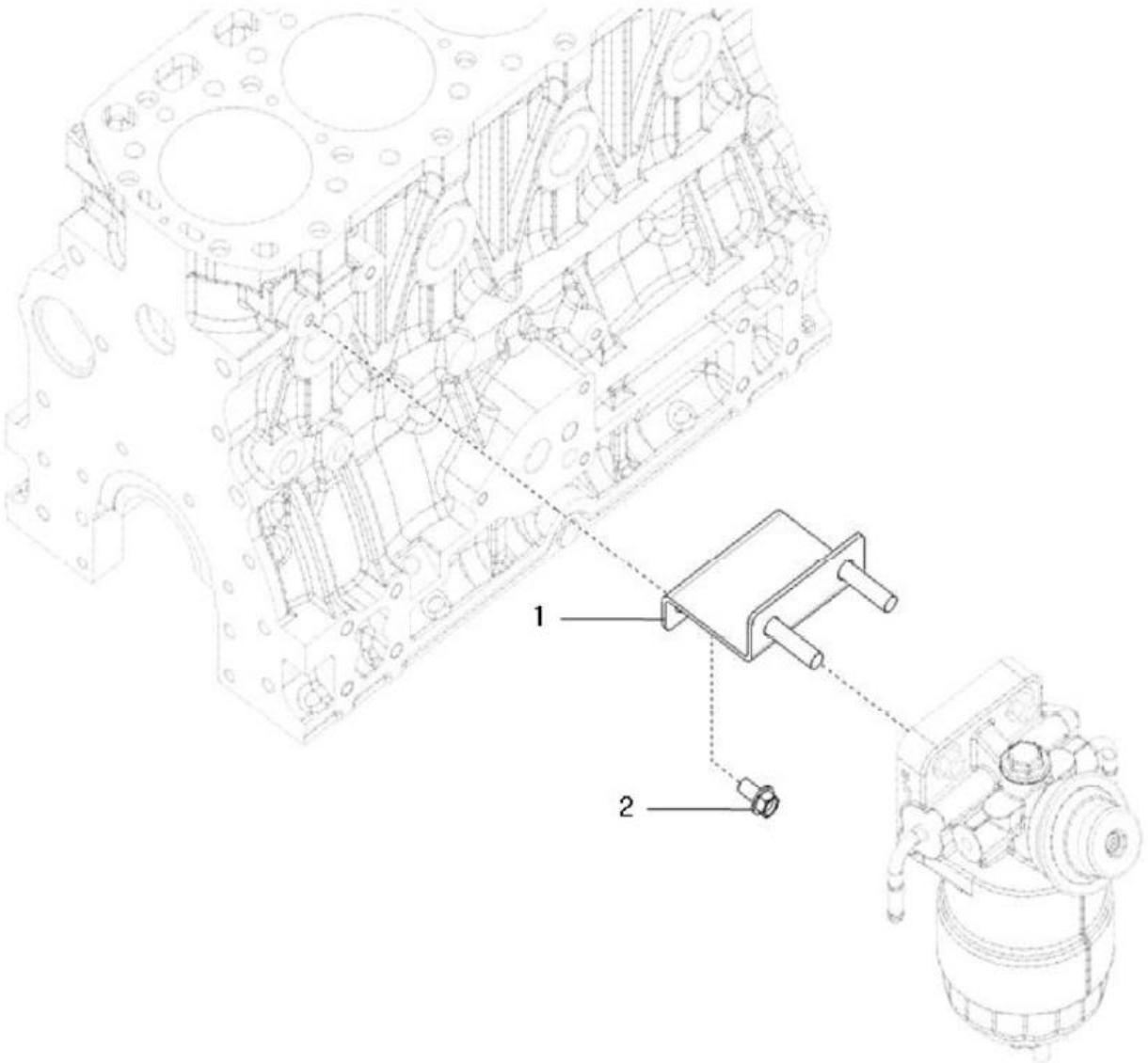

NOTE	

https://truckmanualshub.com/

FIG 136 T574ST / T574NC / T494ST / T494NC	ALTERNATOR	P1	YEAR 2018	

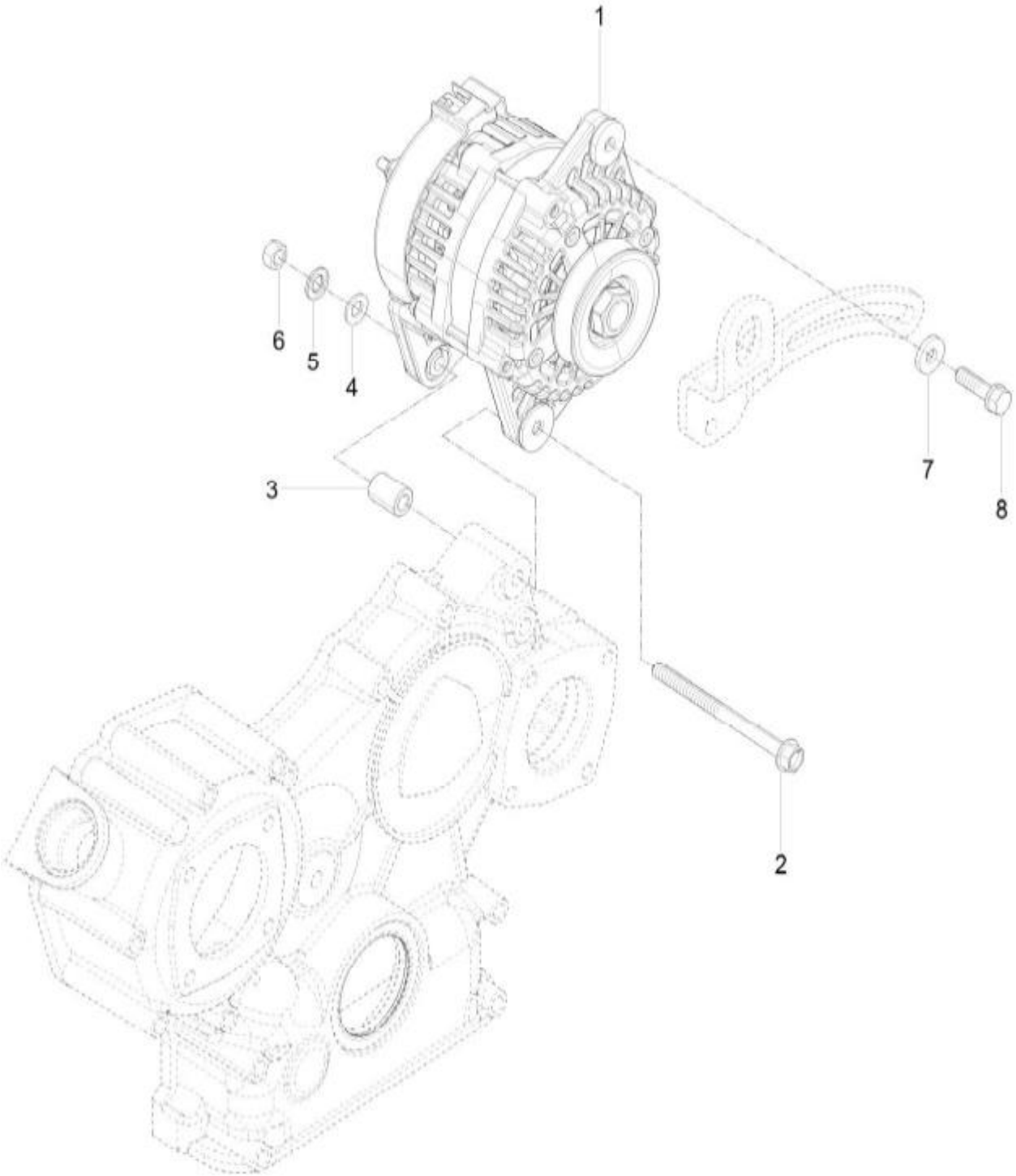

NOTE

FIG 137 T574ST / T574NC / T494ST / T494NC	https://truckmanualshub.com/ V-BELT	P1	YEAR 2018	

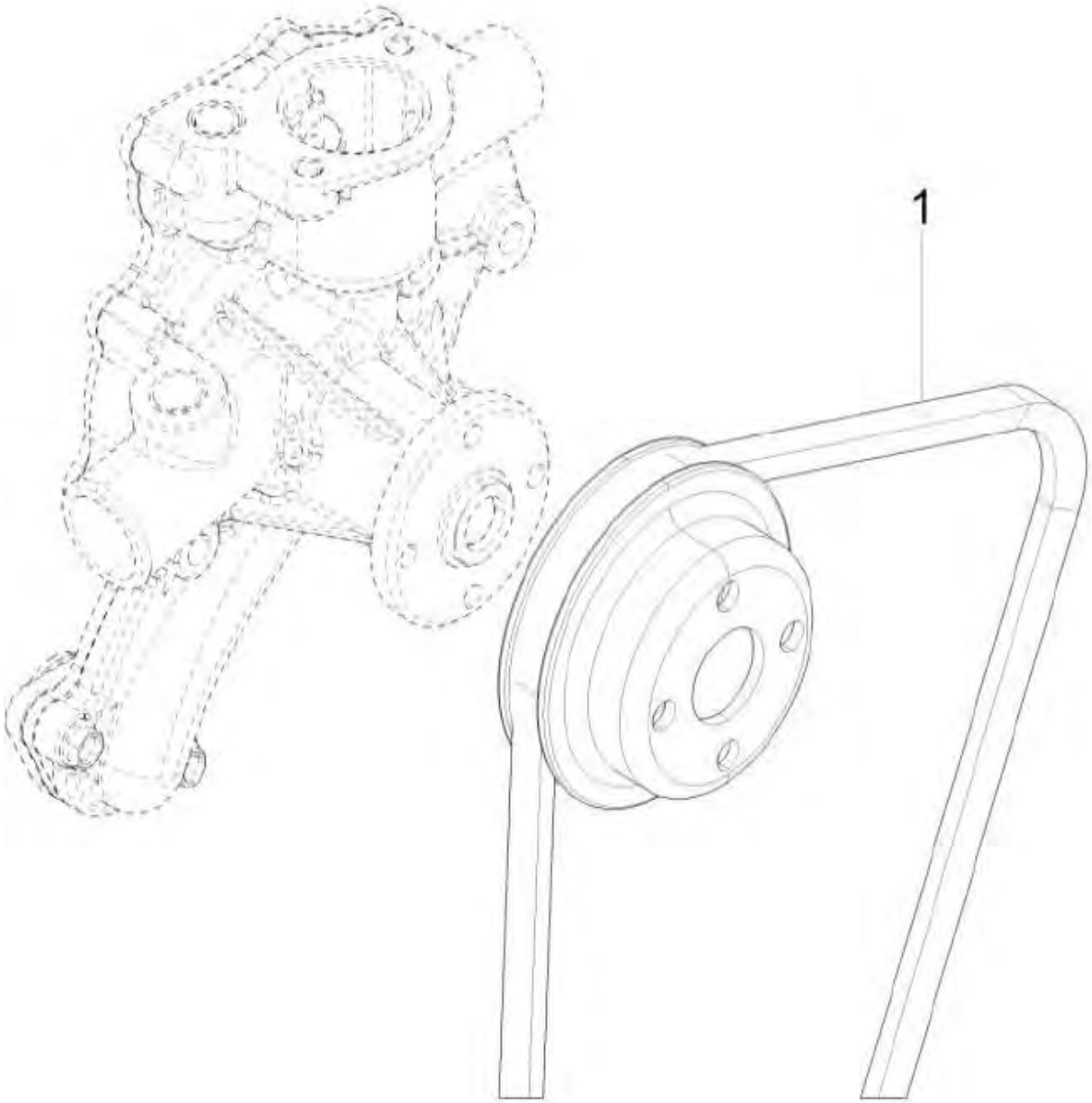

NOTE	

https://truckmanualshub.com/

FIG 138 T574ST / T574NC / T494ST / T494NC	FUEL FILTER	P1	YEAR 2018	

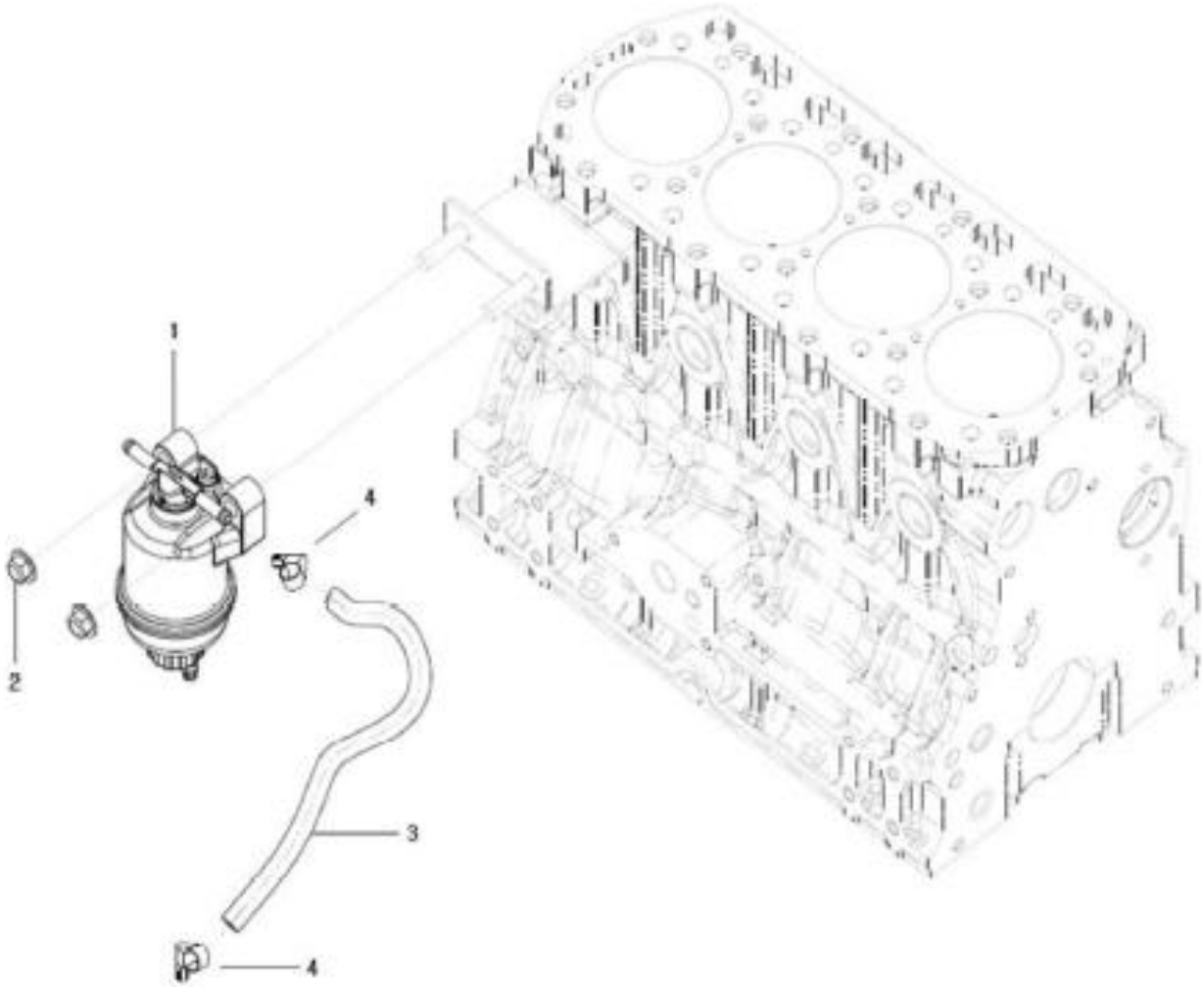

NOTE	

https://truckmanualshub.com/

FIG 139A

T574ST / T574NC / T494ST / T494NC

DPF SUPPORT (T574)

P1

YEAR

2018

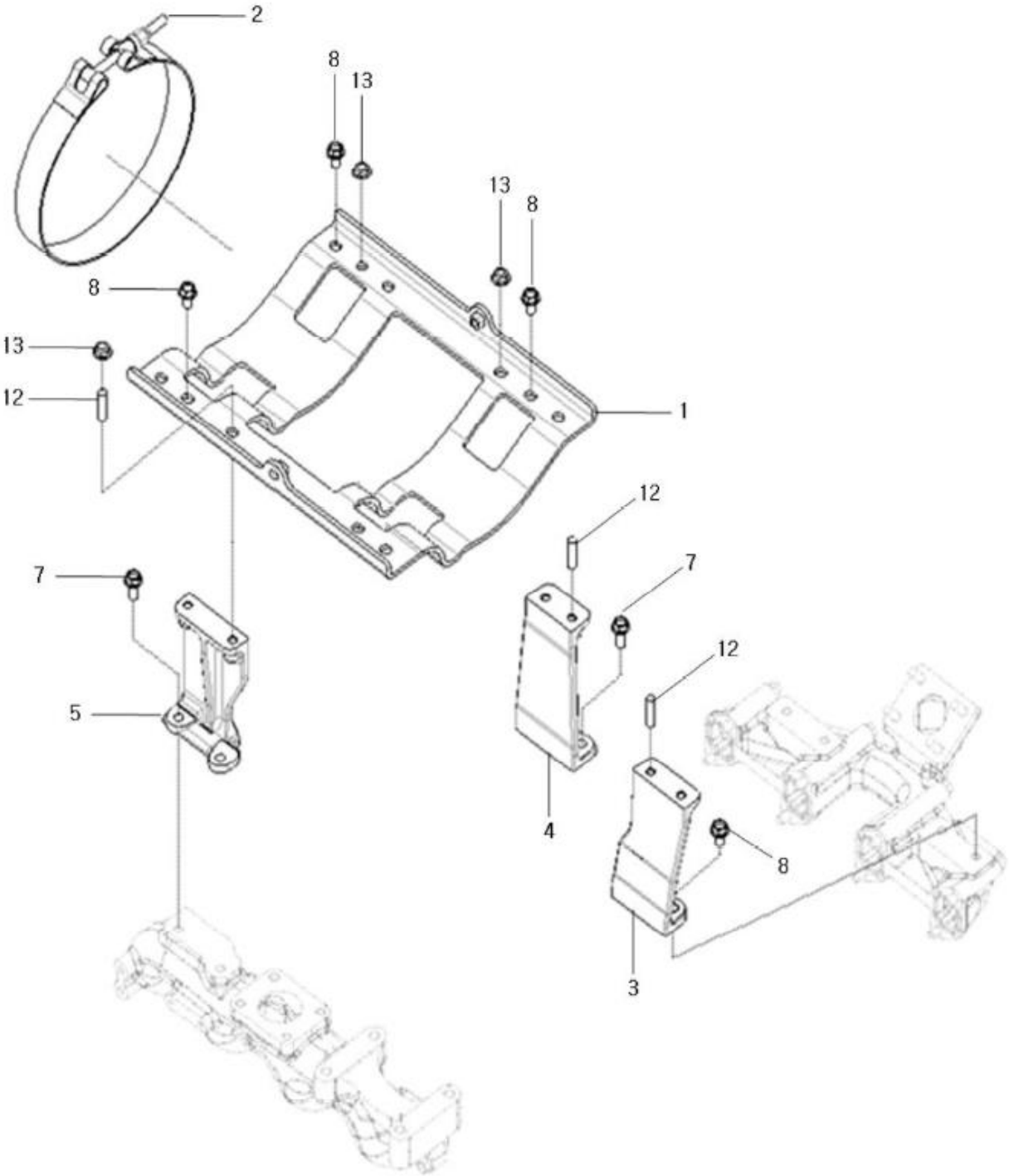

NOTE

https://truckmanualshub.com/

FIG 139B T574ST / T574NC / T494ST / T494NC	DPF SUPPORT (T494)	P2	YEAR 2018	

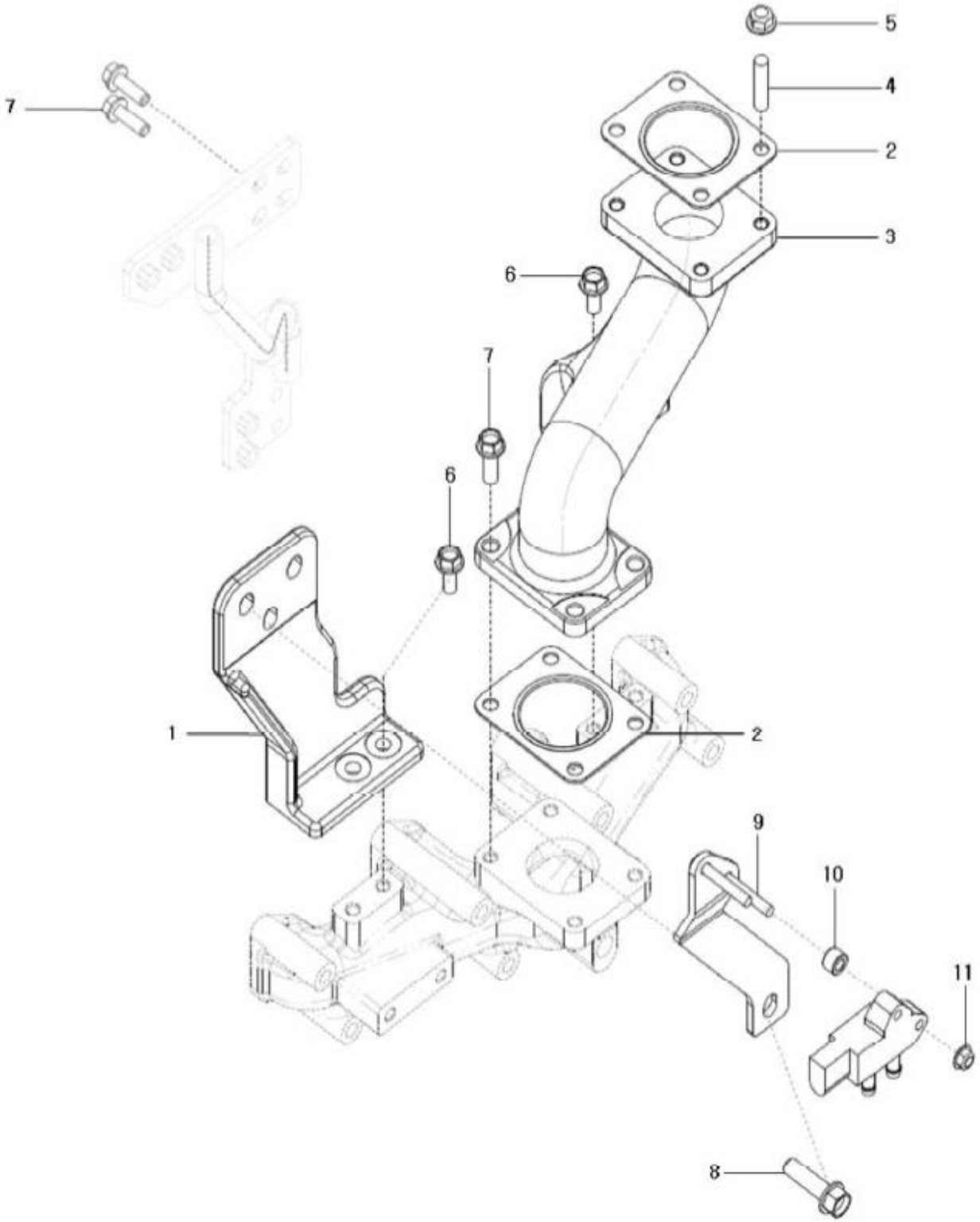

NOTE	

https://truckmanualshub.com/

FIG 140

T574ST / T574NC / T494ST / T494NC

DATAPLATE

P1

YEAR

2018

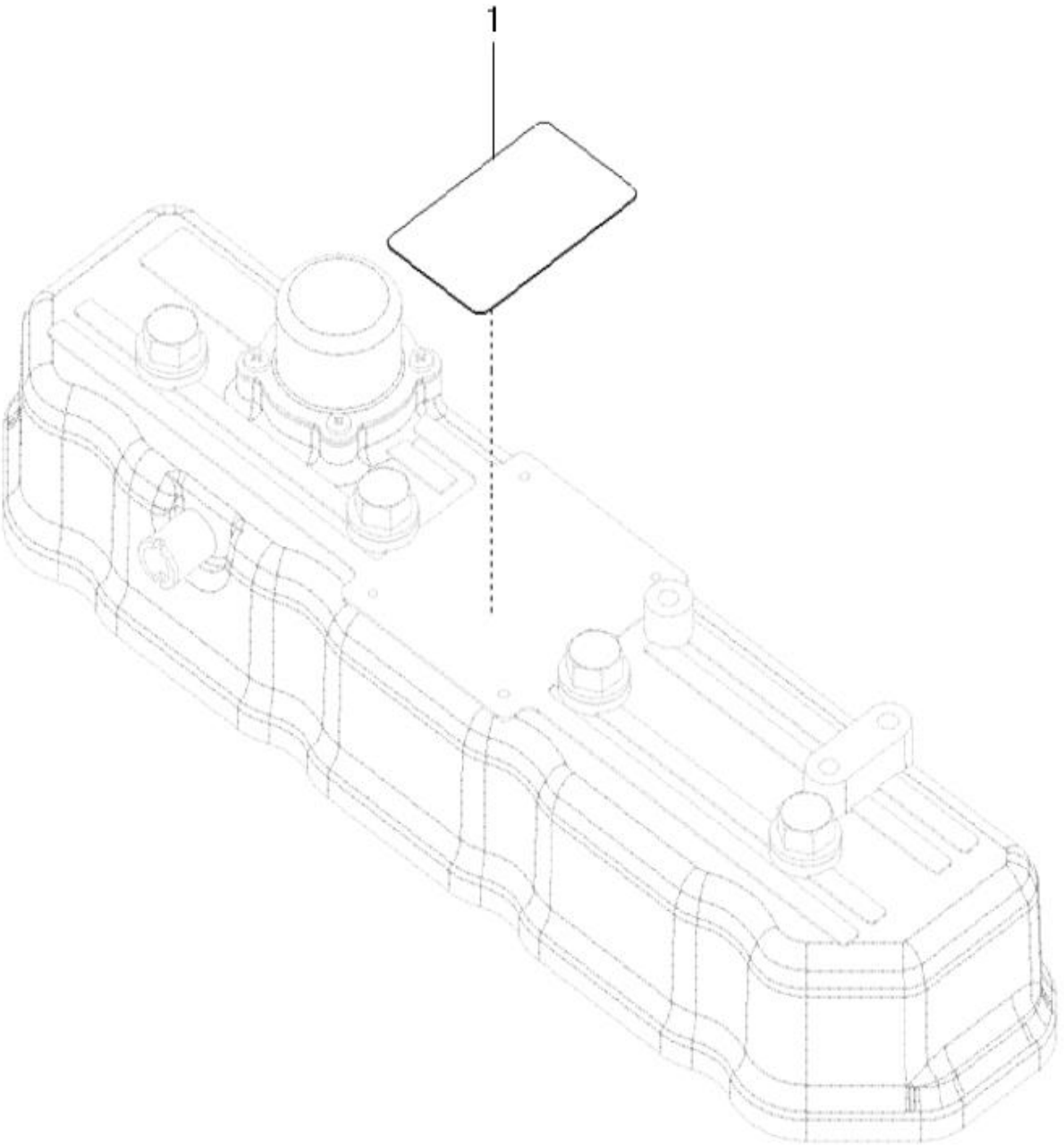

NOTE

https://truckmanualshub.com/

FIG 141 T574ST / T574NC / T494ST / T494NC	NAME PLATE, STARTING MOTOR	P1	YEAR 2018

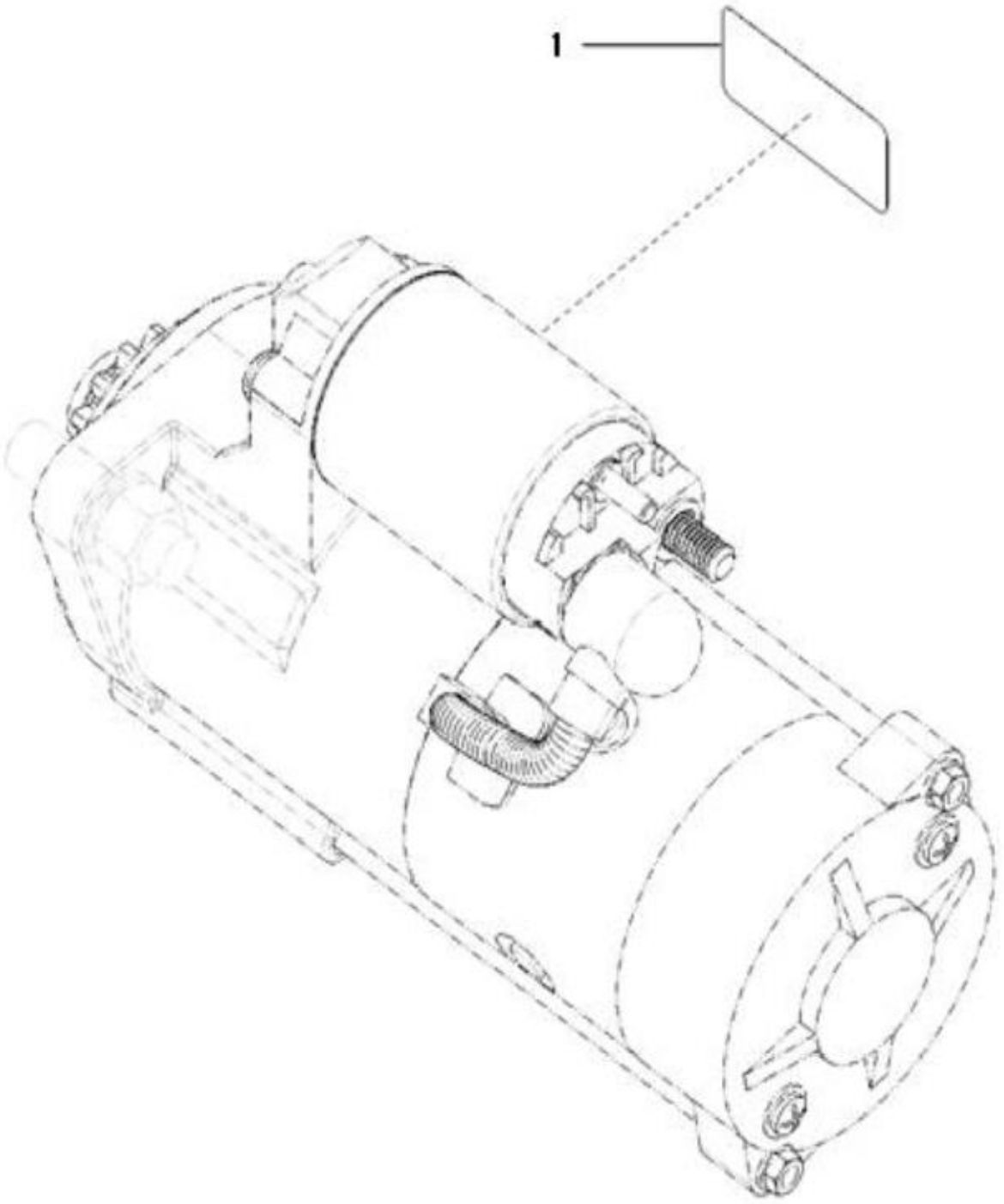

NOTE	

https://truckmanualshub.com/

FIG 142A T574ST / T574NC / T494ST / T494NC	DPF ASS'Y (T574)	P1	YEAR 2018	

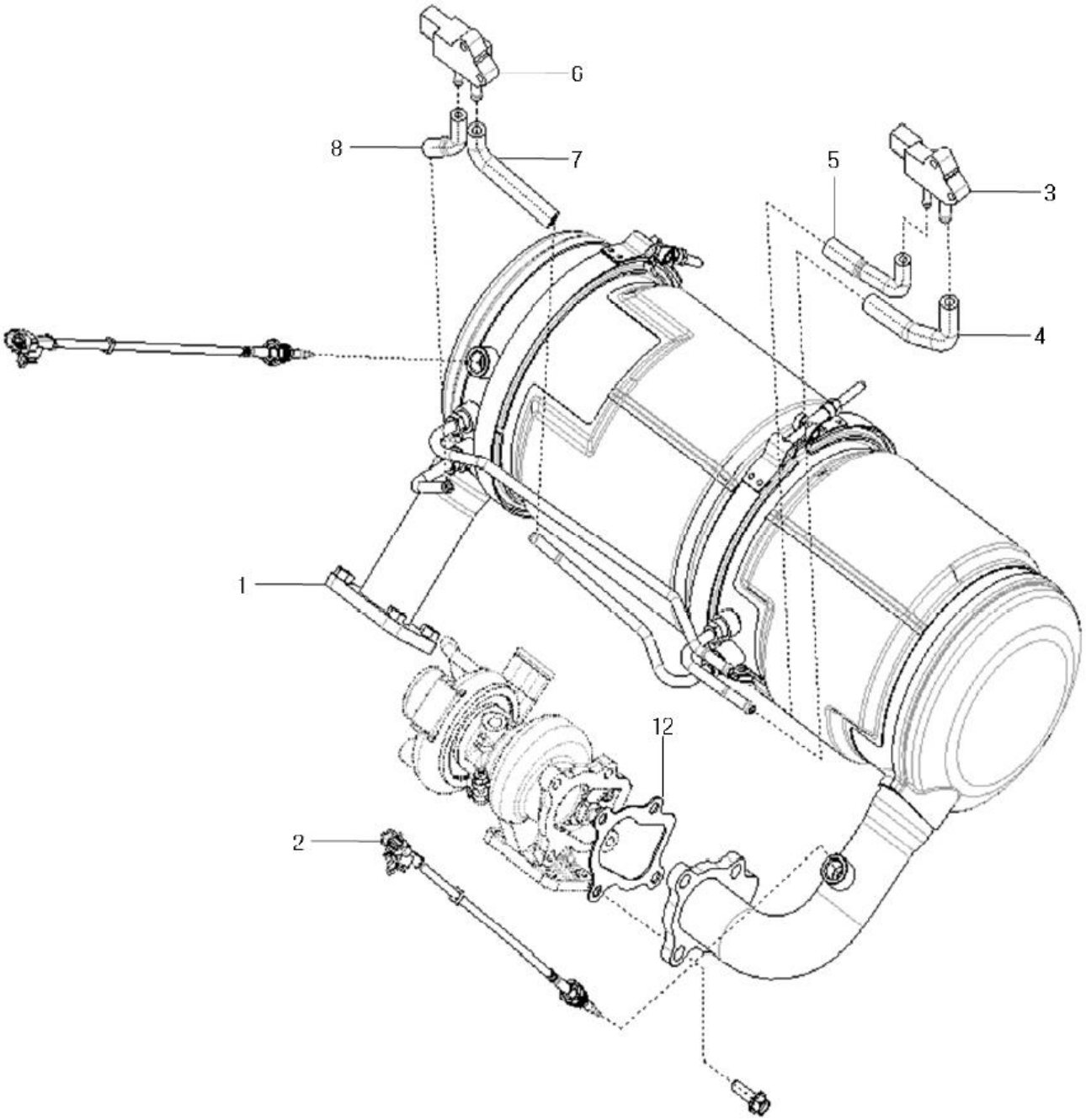

NOTE	

https://truckmanualshub.com/

FIG 142B T574ST / T574NC / T494ST / T494NC	DPF ASS'Y (T494)	P2	YEAR 2018	

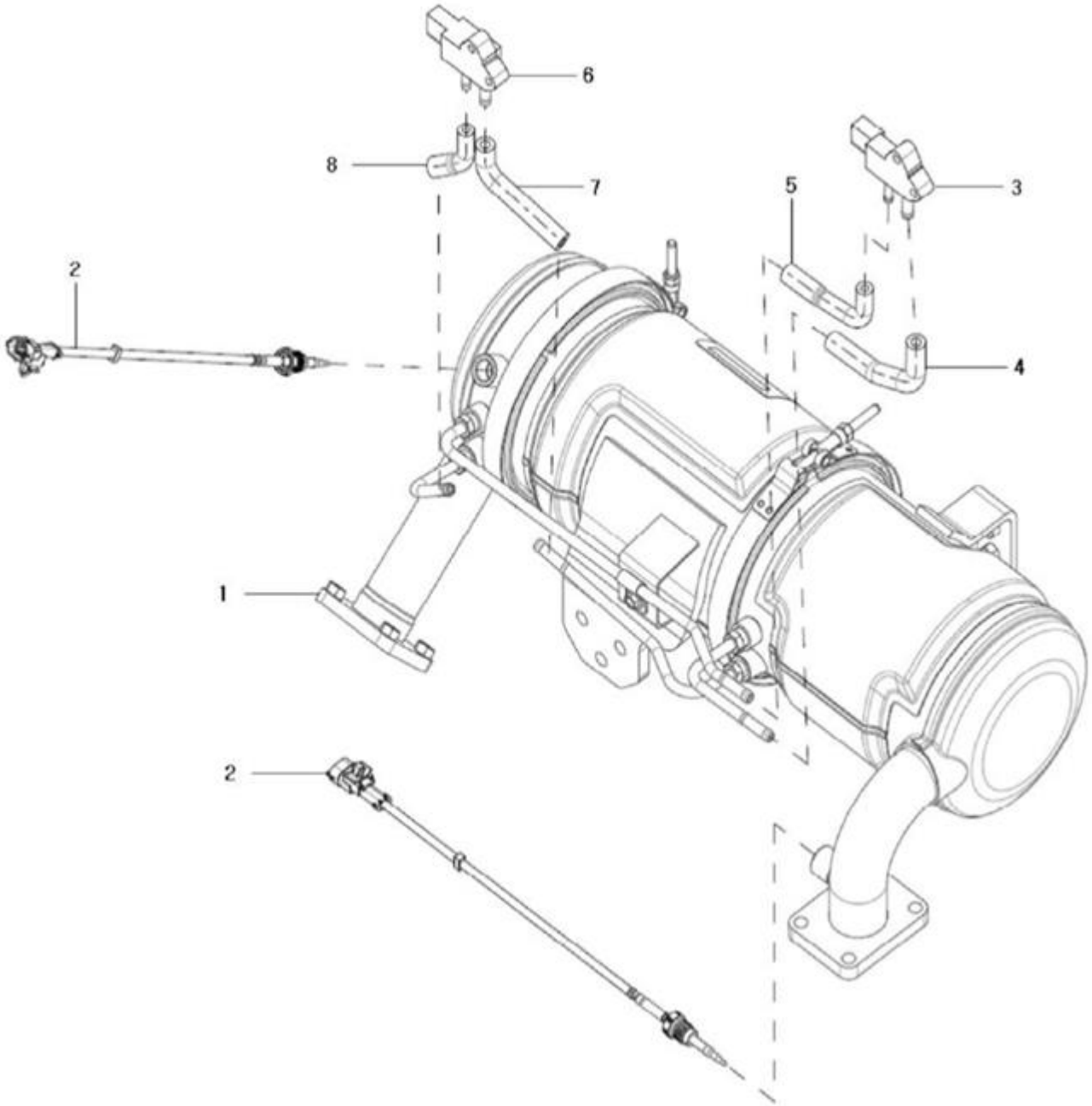

NOTE	

https://truckmanualshub.com/

FIG 143 T574ST / T574NC / T494ST / T494NC	LIFT ASS'Y	P1	YEAR 2018	

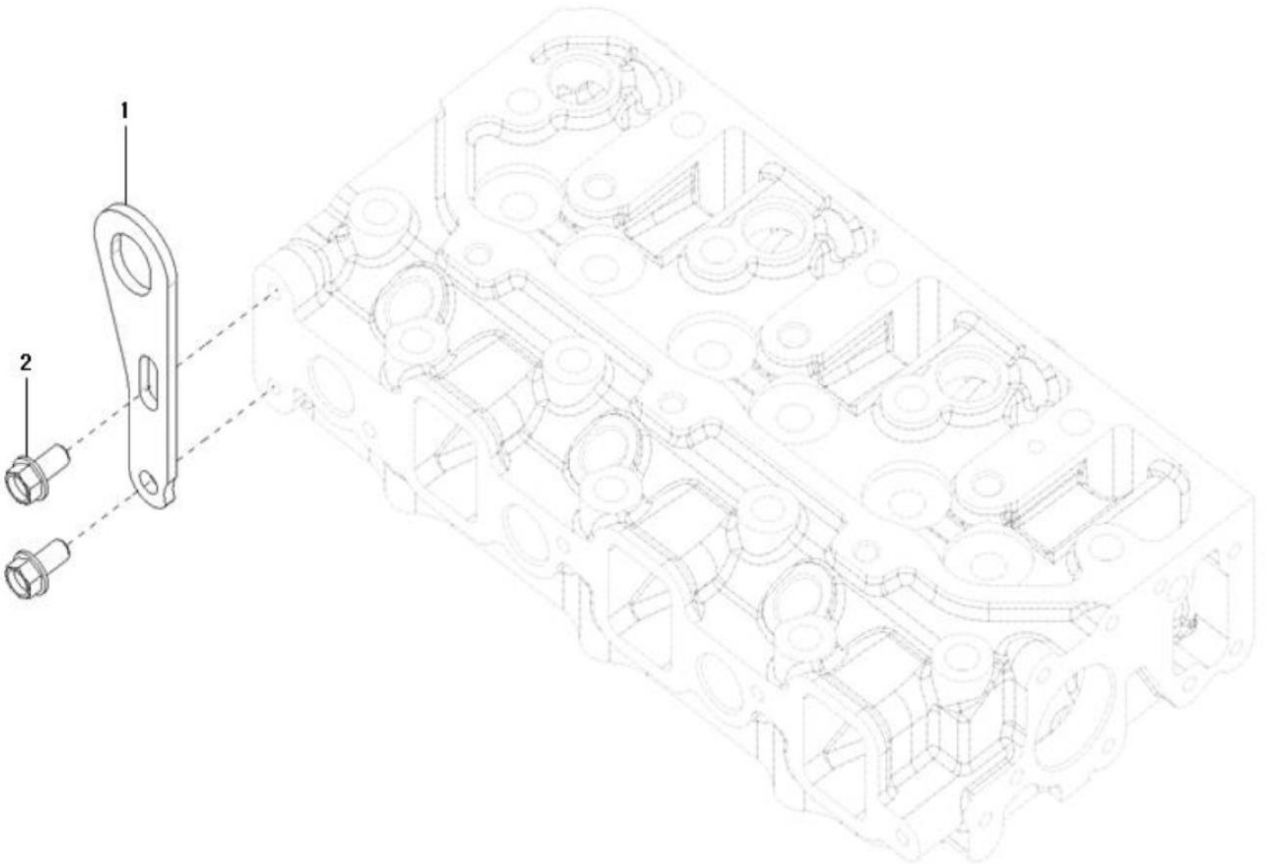

NOTE

https://truckmanualshub.com/

FIG 144 T574ST / T574NC / T494ST / T494NC	COMP . DRIVE PULLEY ASSyY OPTION	P1	YEAR 2018	

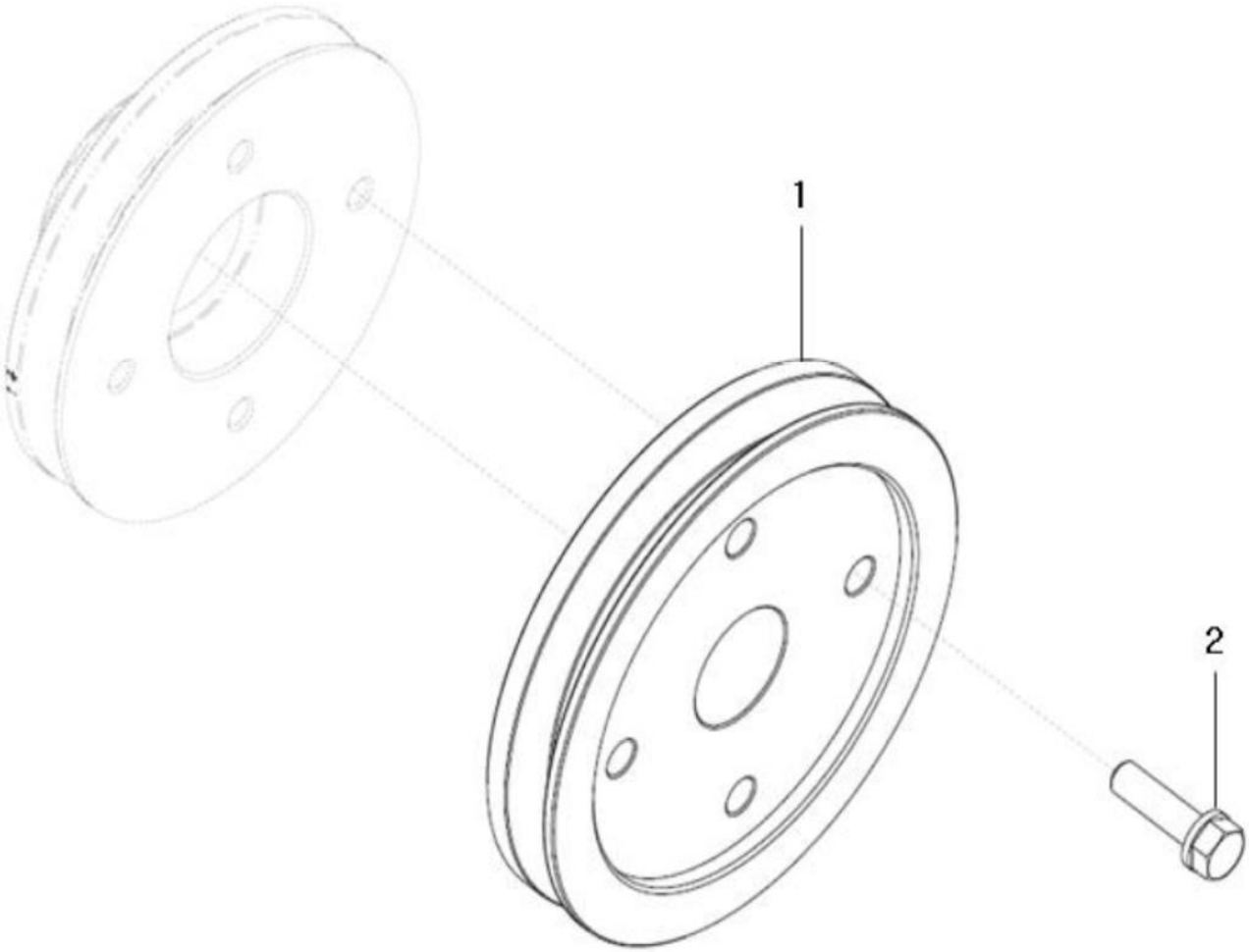

NOTE	

https://truckmanualshub.com/

FIG 201 T574ST / T574NC / T494ST / T494NC	AIR CLEANER(T574)	P1	YEAR 2018	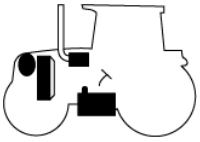

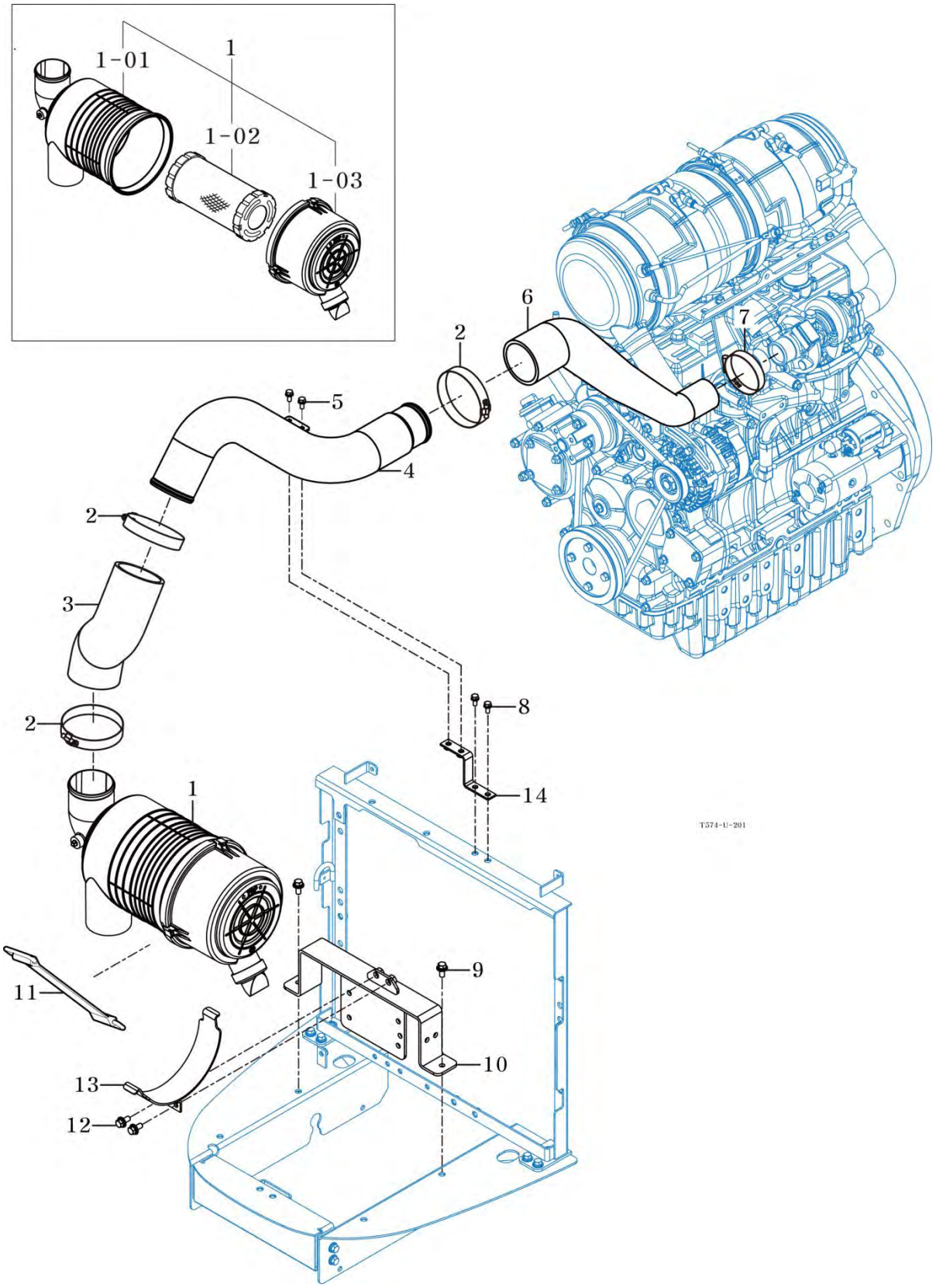

NOTE

https://truckmanualshub.com/

FIG 201 T574ST / T574NC / T494ST / T494NC	AIR CLEANER(T494)	P1	YEAR 2018	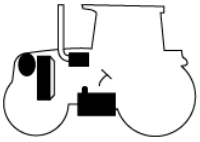

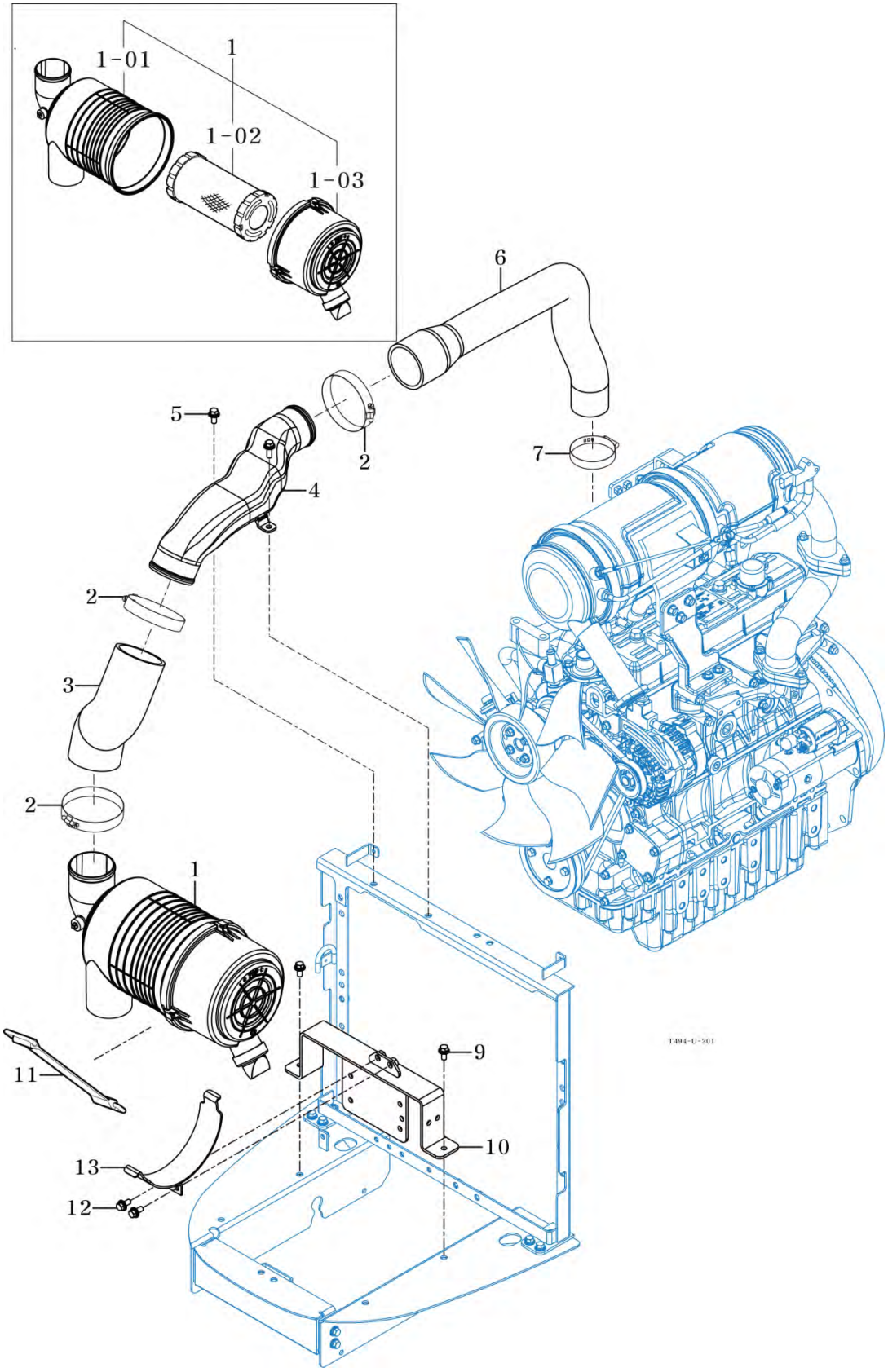

NOTE

https://truckmanualshub.com/

FIG 202 T574ST / T574NC / T494ST / T494NC	RADIATOR	P1	YEAR 2018	

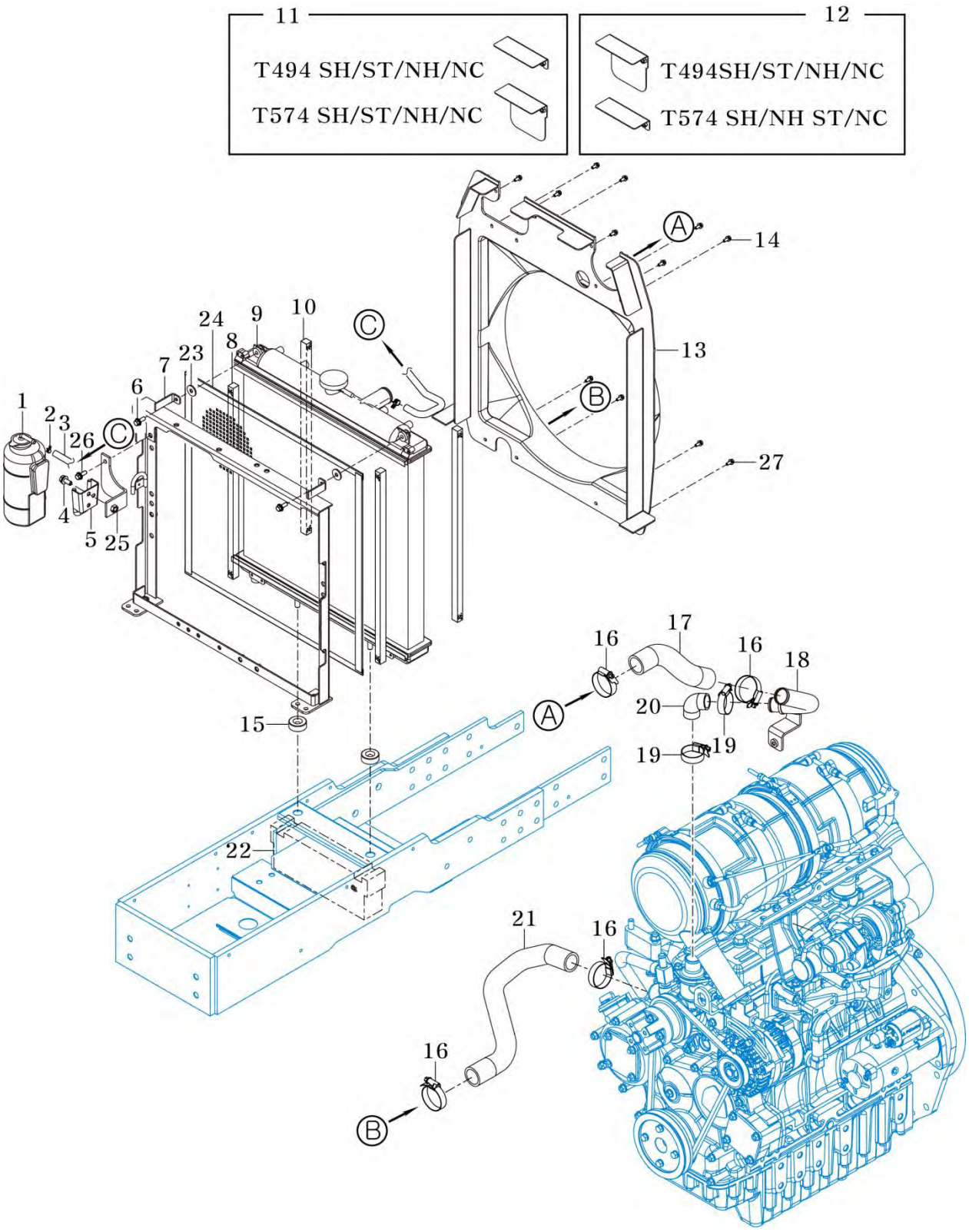

NOTE

https://truckmanualshub.com/

FIG 203 T574ST / T574NC / T494ST / T494NC	MUFFLER	P1	YEAR 2018	

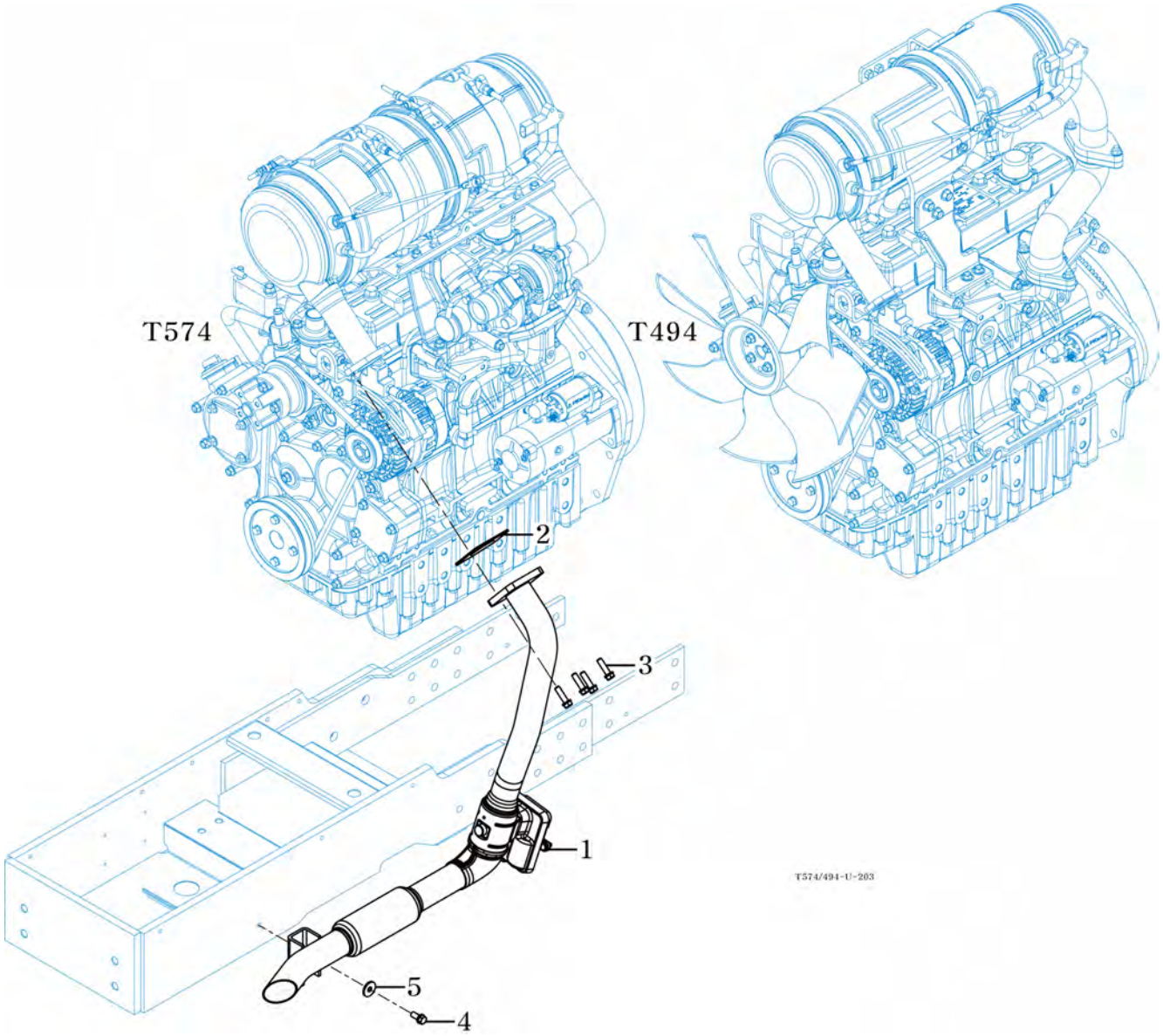

NOTE	

https://truckmanualshub.com/

FIG 204 T574ST / T574NC / T494ST / T494NC	FUEL HOSE & FILTER	P1	YEAR 2018	

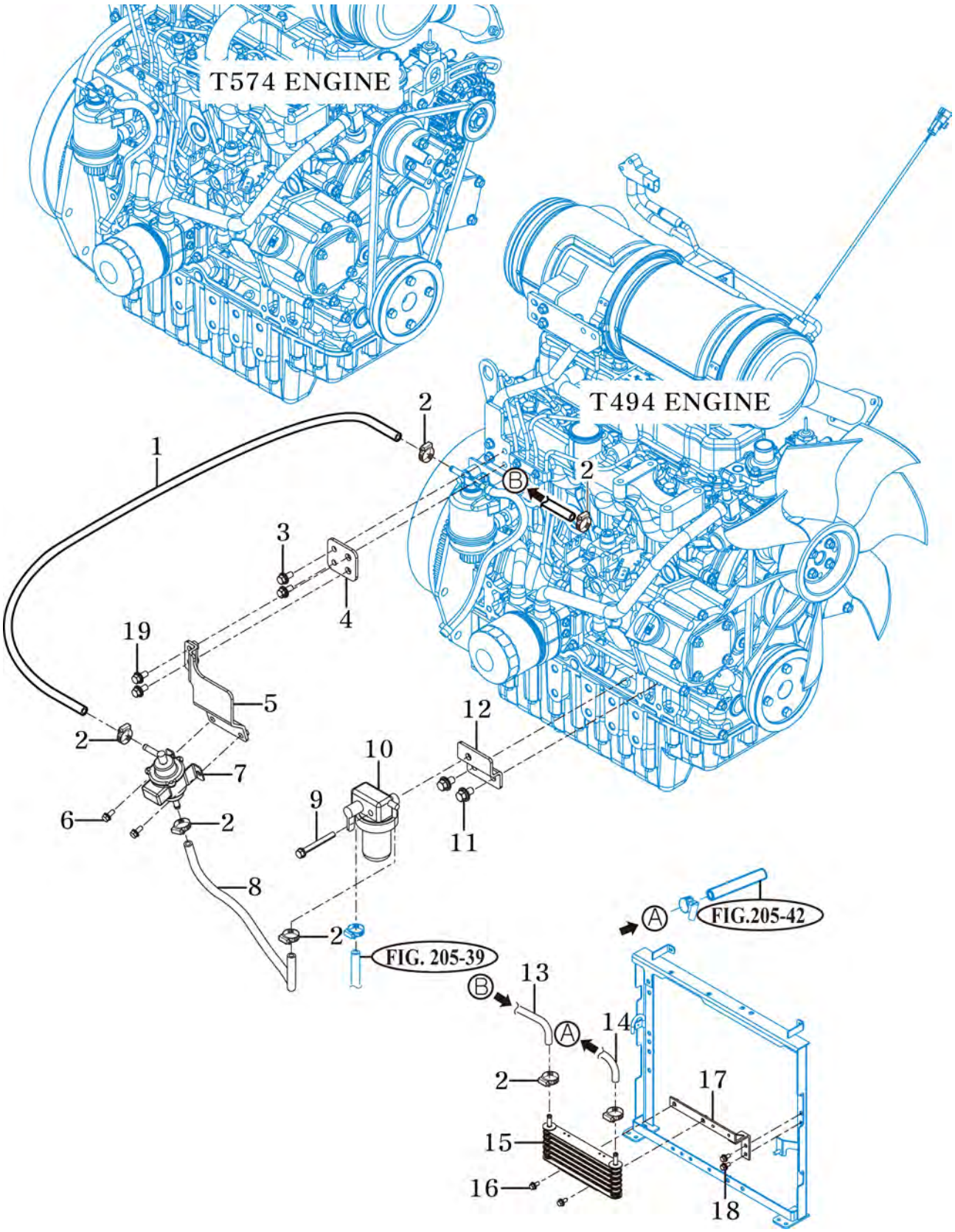

NOTE

https://truckmanualshub.com/

FIG 205 T574ST / T574NC / T494ST / T494NC	FUEL TANK	P1	YEAR 2018	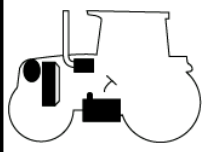

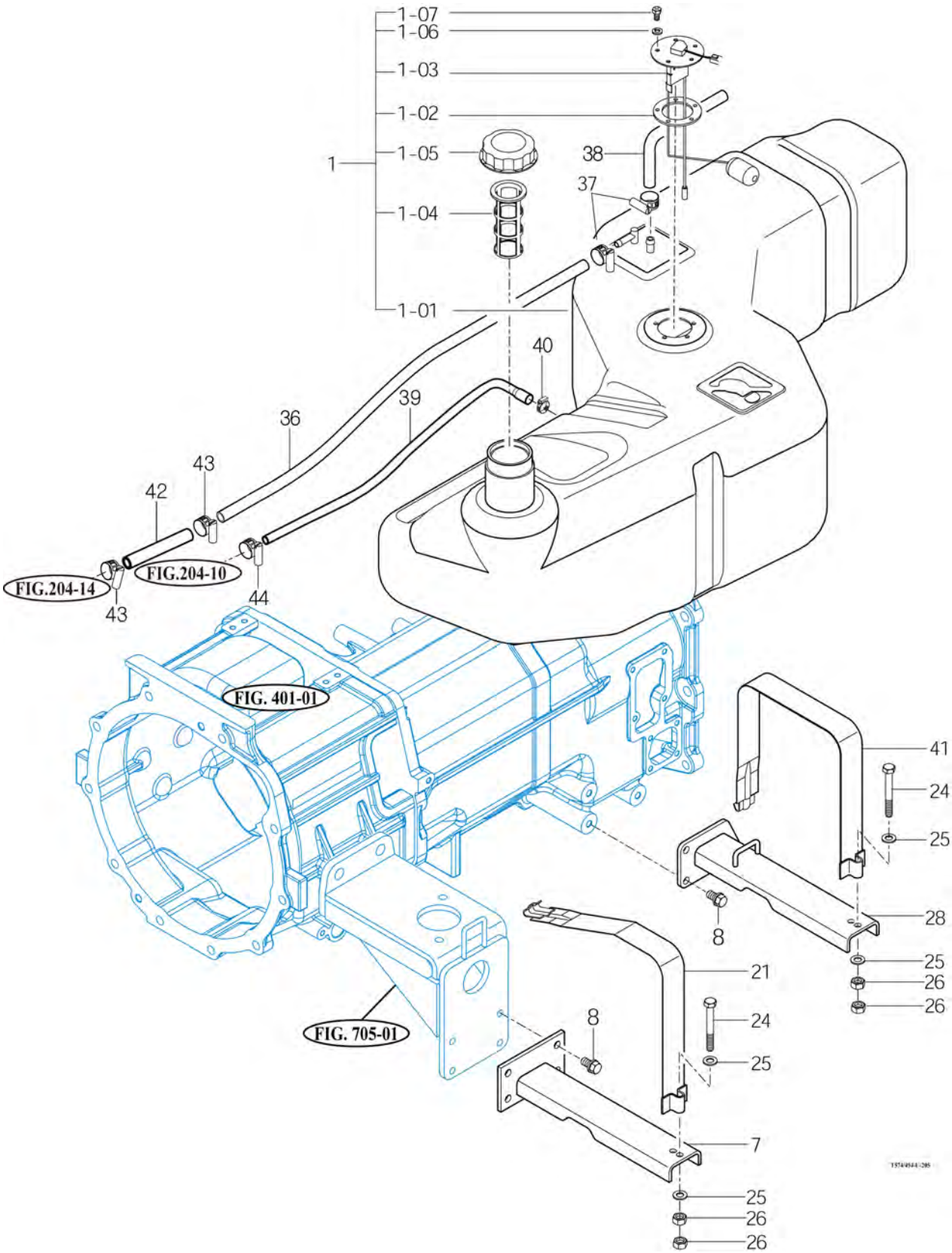

NOTE

https://truckmanualshub.com/

FIG 206 T574ST / T574NC / T494ST / T494NC	ACCELERATOR	P1	YEAR 2018	

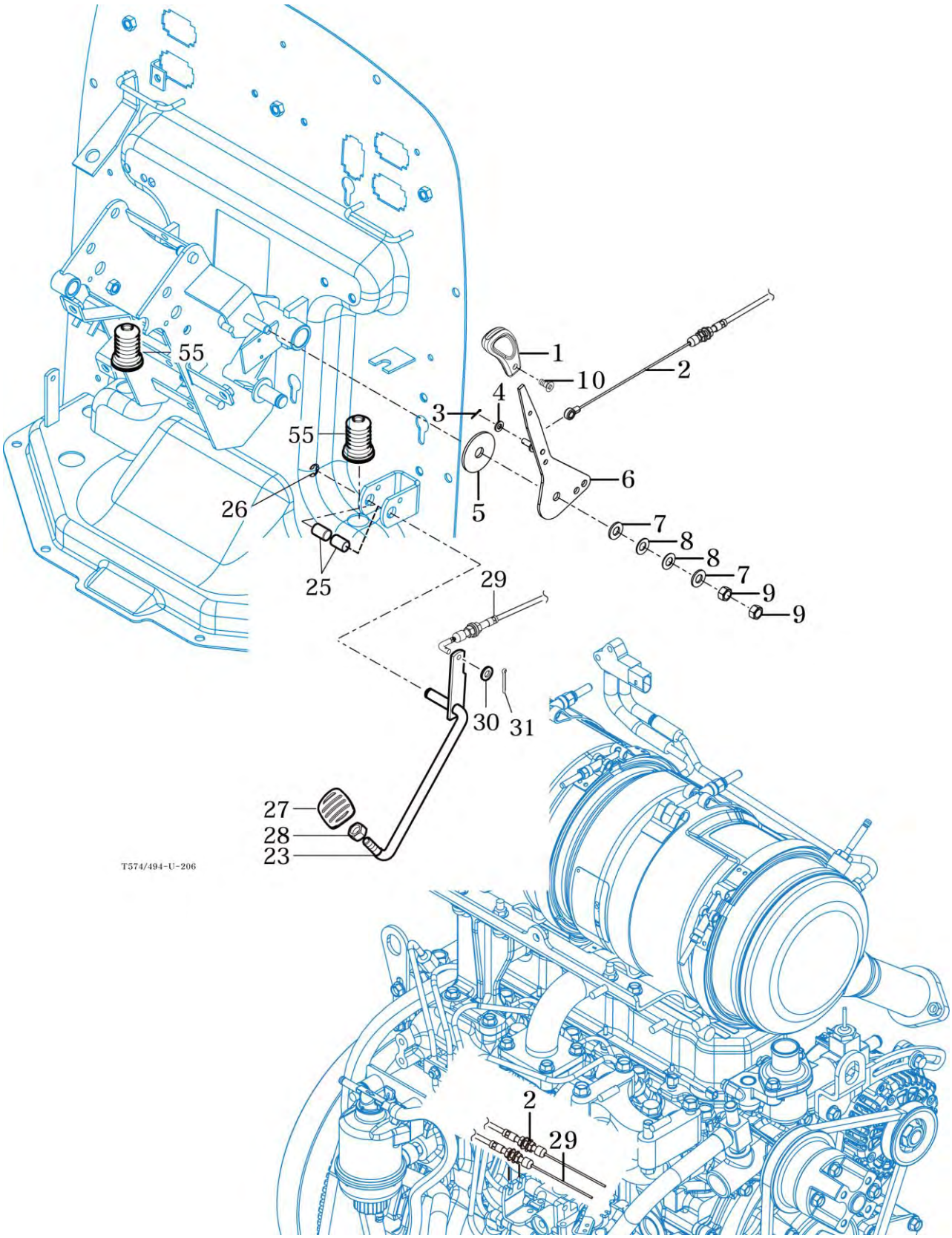

NOTE	

https://truckmanualshub.com/

FIG 301 T574ST / T574NC / T494ST / T494NC	CLUTCH	P1	YEAR 2018	

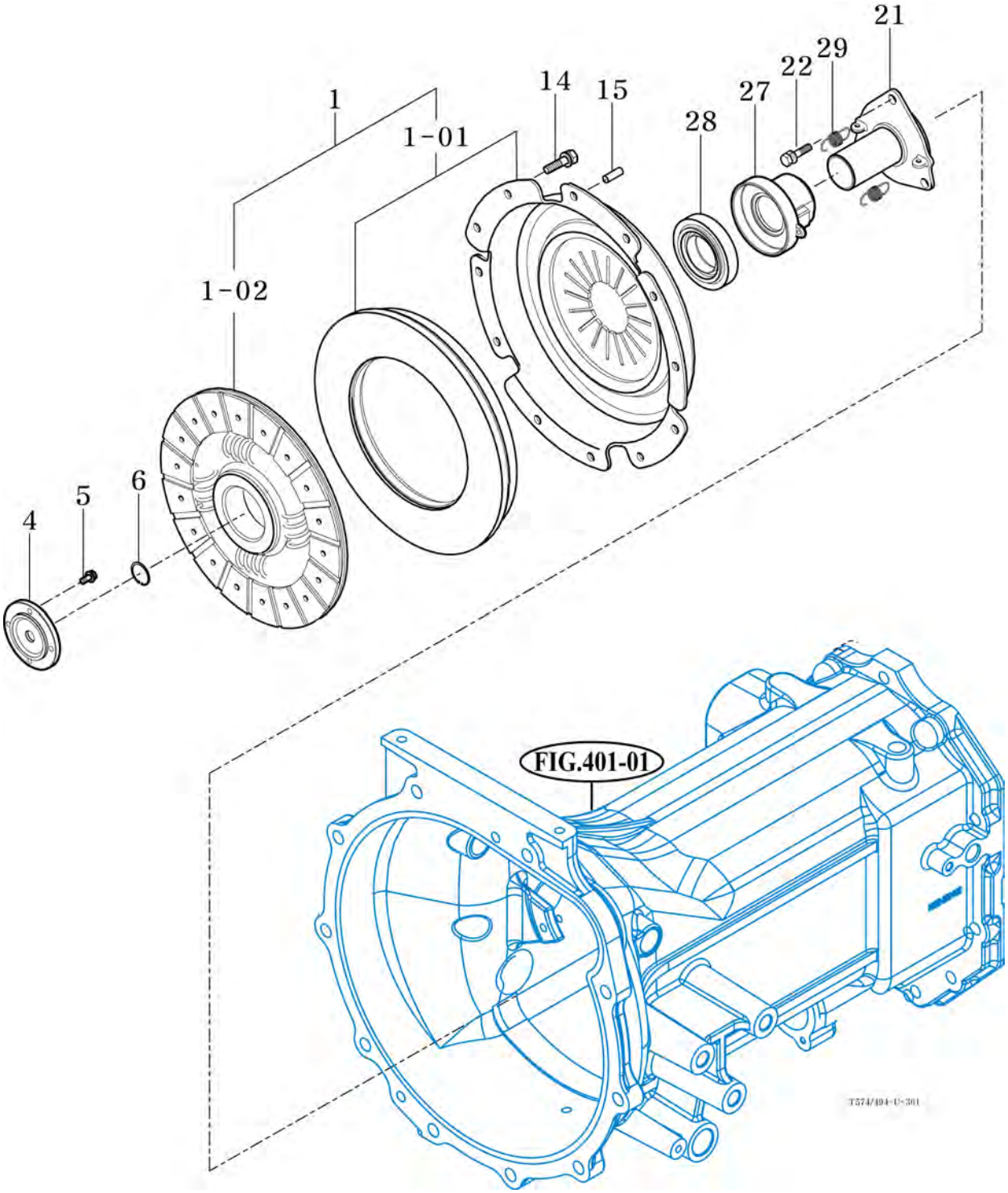

NOTE

https://truckmanualshub.com/

FIG 302 T574ST / T574NC / T494ST / T494NC	CLUTCH PEDAL	P1	YEAR 2018	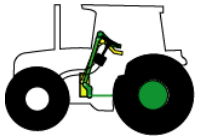

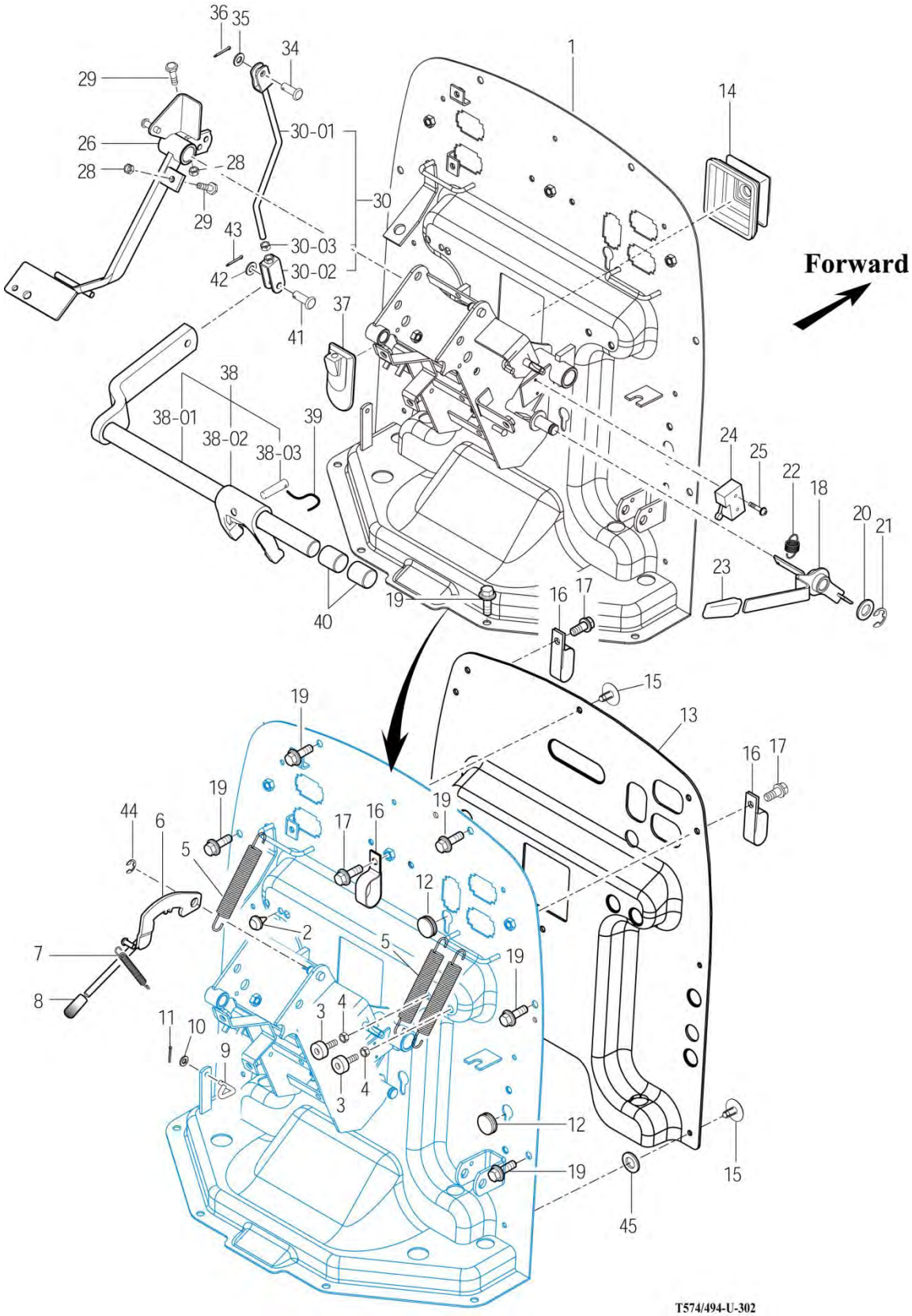

NOTE

https://truckmanualshub.com/

FIG 303

T574ST / T574NC / T494ST / T494NC

BRAKE

P1

YEAR

2018

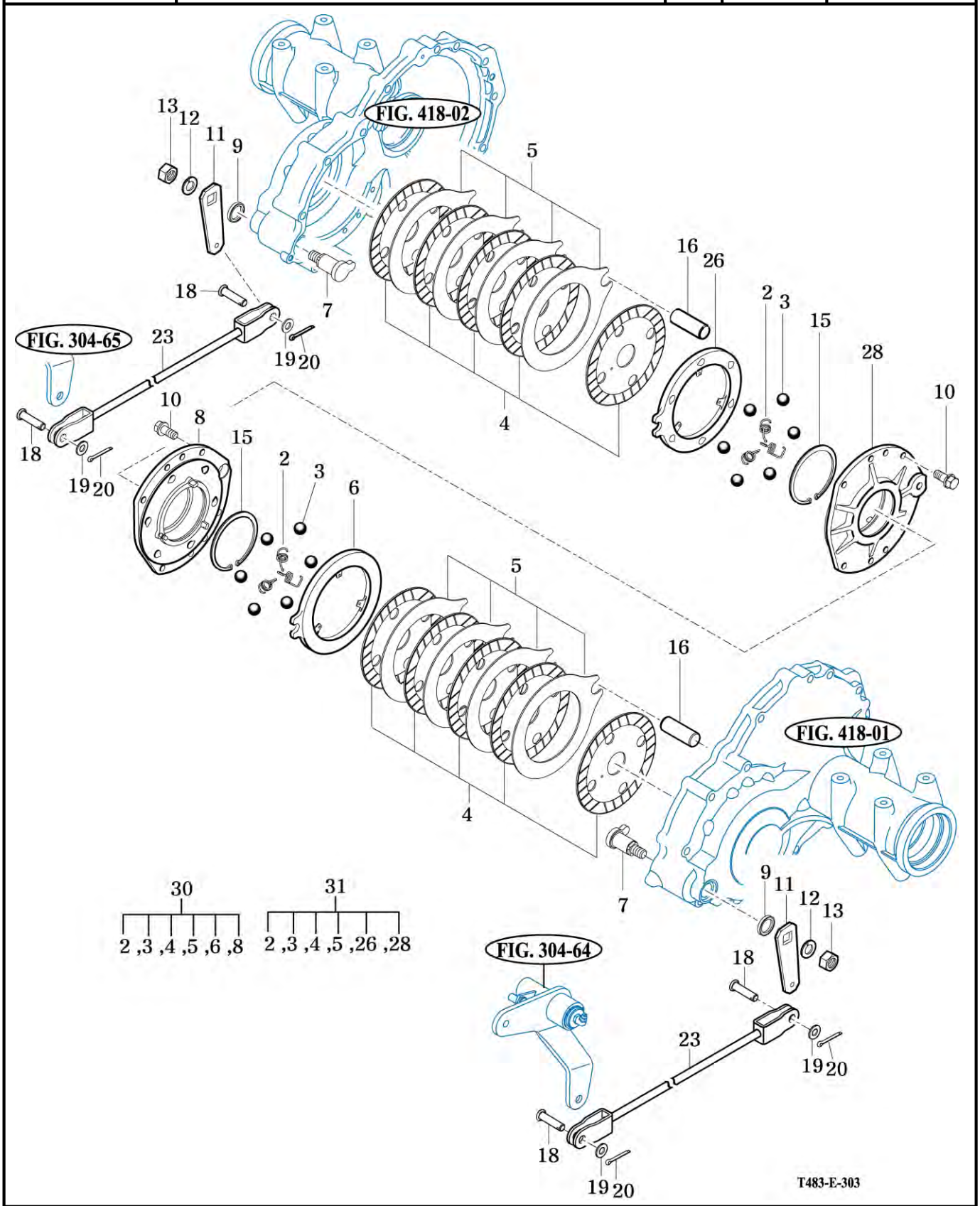

NOTE

https://truckmanualshub.com/

FIG 304

T574ST / T574NC / T494ST / T494NC

BRAKE PEDAL & LINK

P1

YEAR

2018

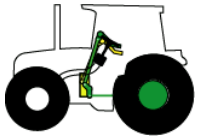

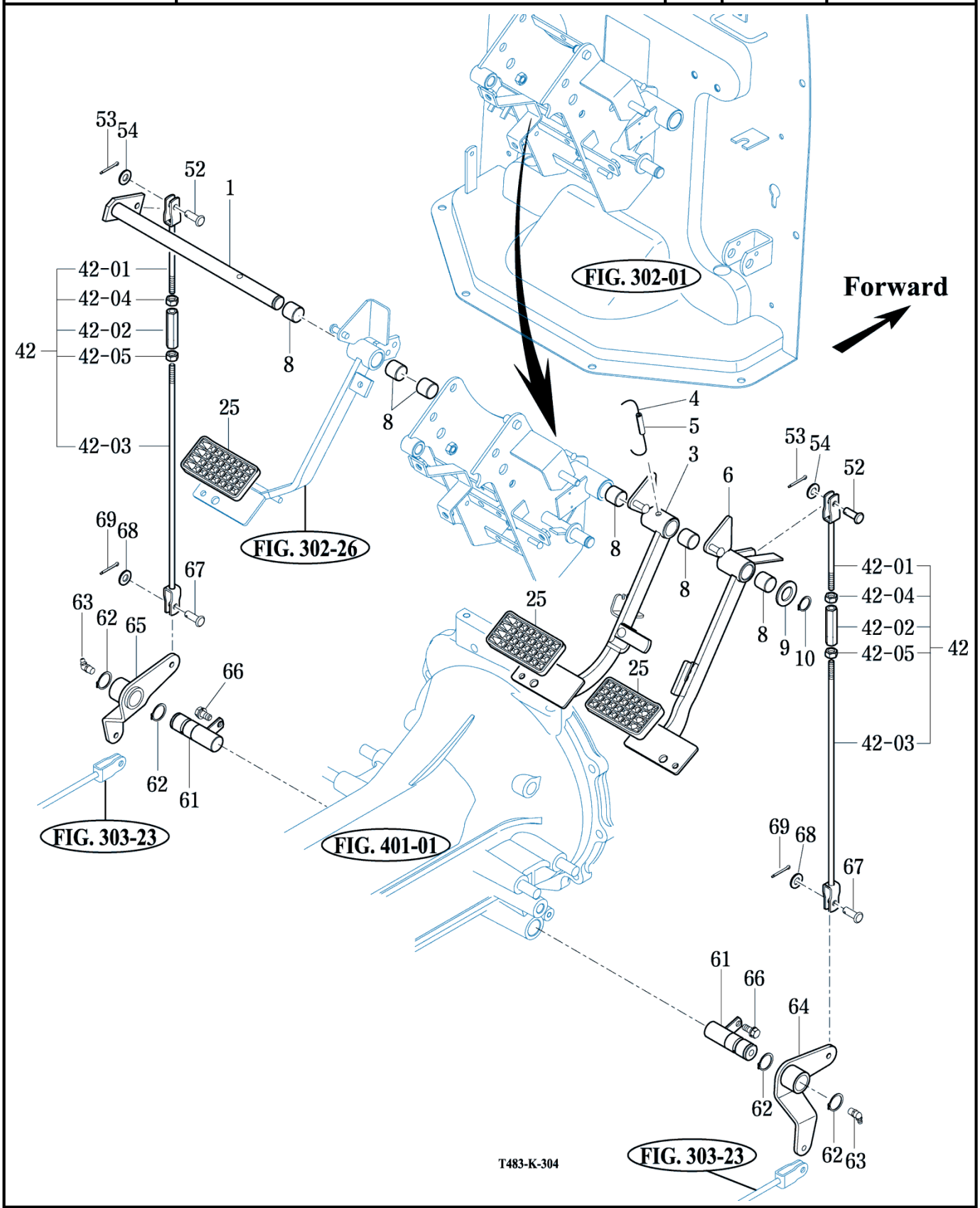

NOTE

https://truckmanualshub.com/

FRONT WHEEL

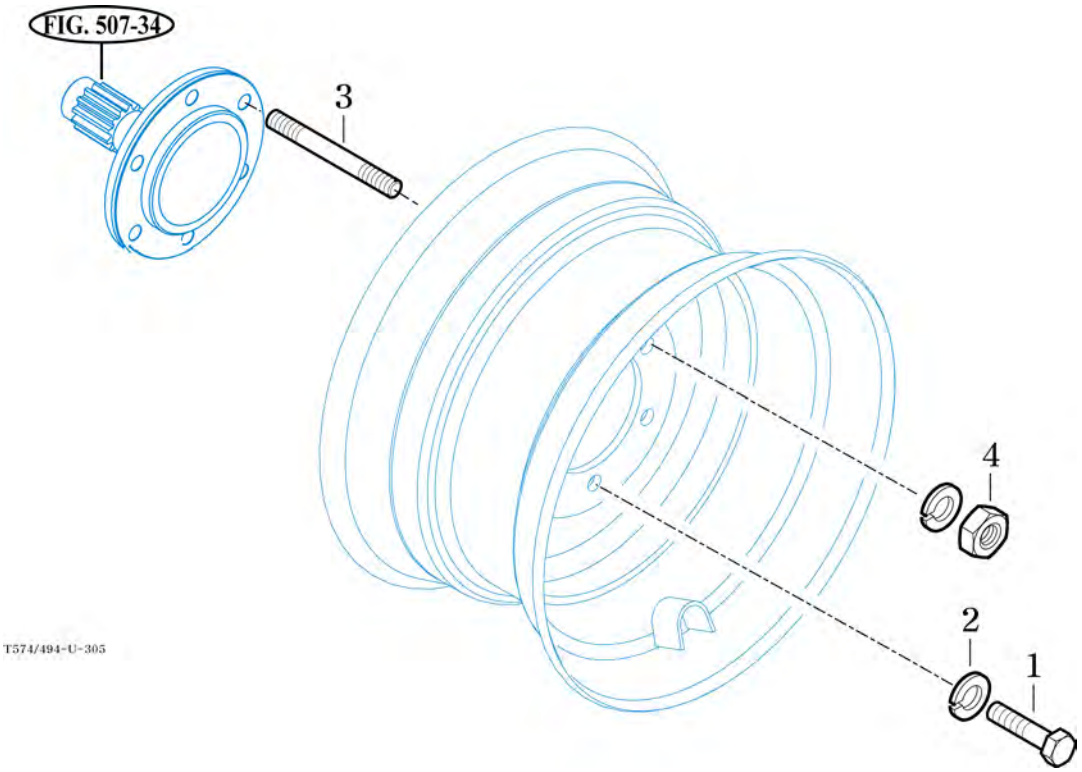

NOTE

https://truckmanualshub.com/

FIG 306 T574ST / T574NC / T494ST / T494NC	REAR WHEEL	P1	YEAR 2018	

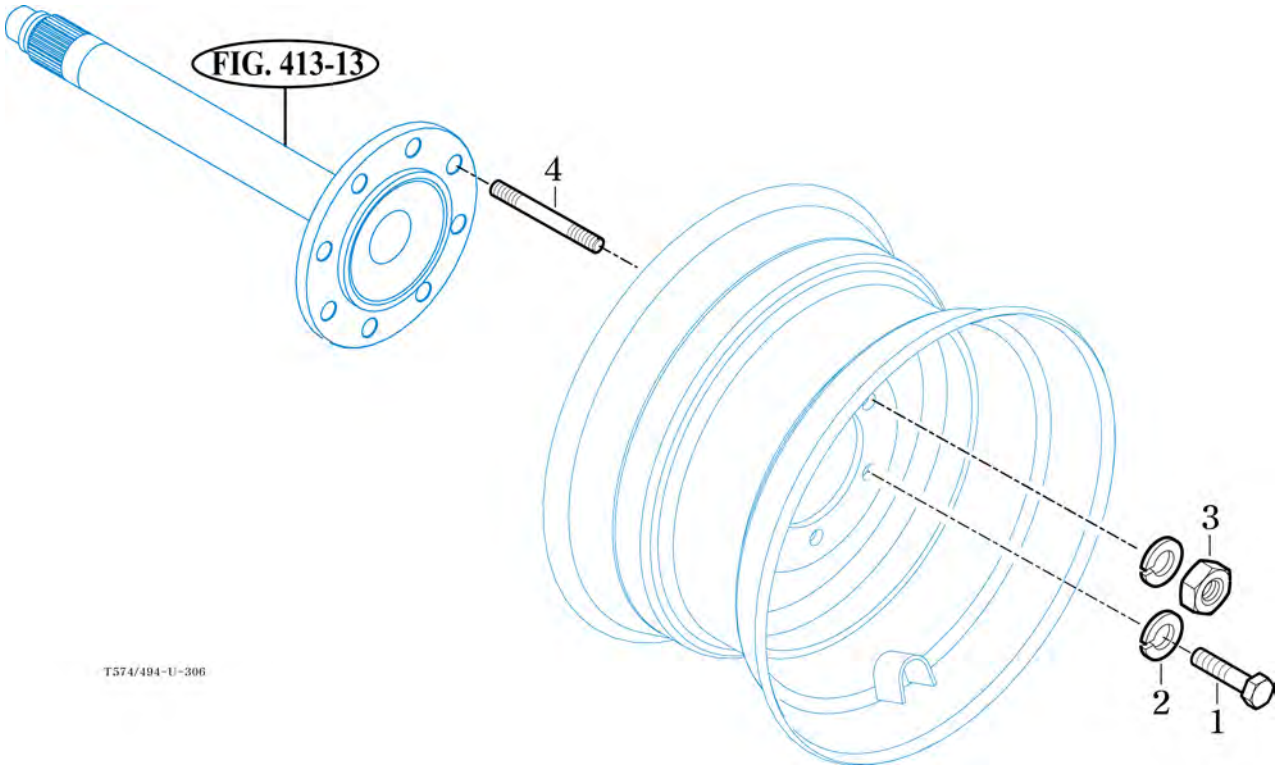

NOTE	

https://truckmanualshub.com/

FIG 307 T574ST / T574NC / T494ST / T494NC	POWER STEERING WHEEL	P1	YEAR 2018	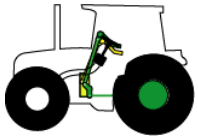

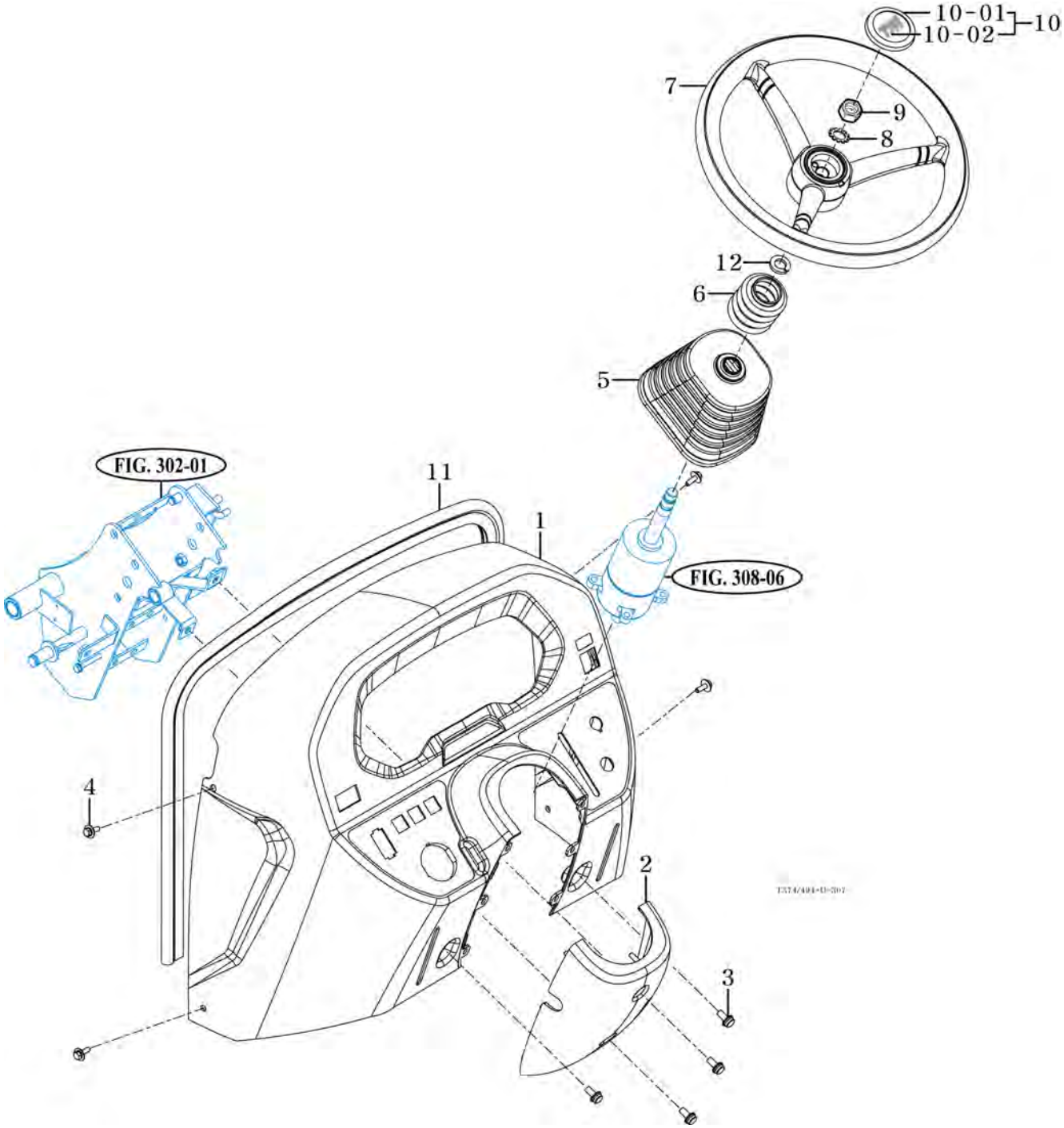

NOTE

https://truckmanualshub.com/

FIG 308 T574ST / T574NC / T494ST / T494NC	POWER STEERING VALVE	P1	YEAR 2018	

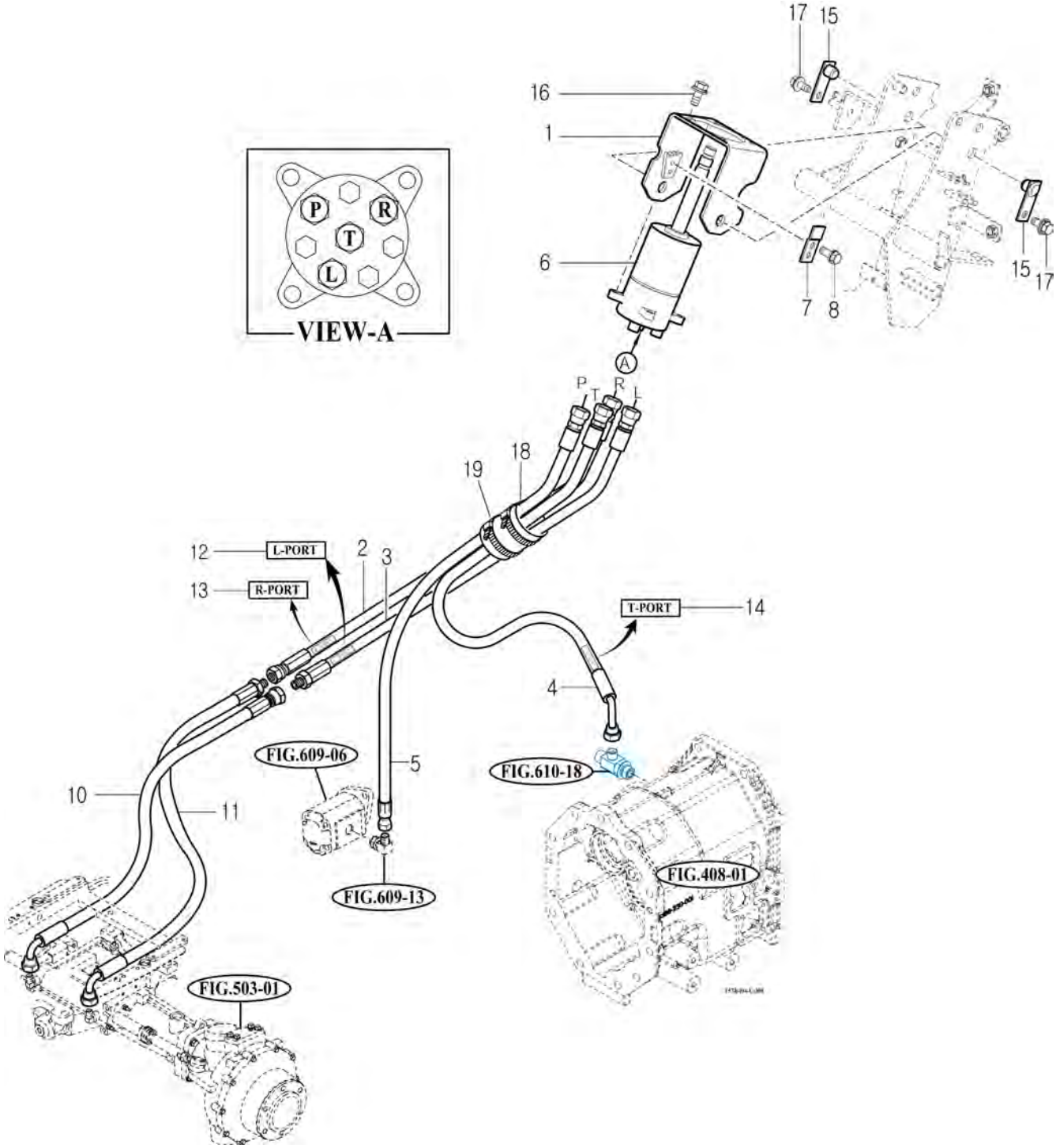

NOTE	

https://truckmanualshub.com/

FIG 309 T574ST / T574NC / T494ST / T494NC	POWER STEERING CYLINDER	P1	YEAR 2018	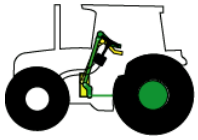

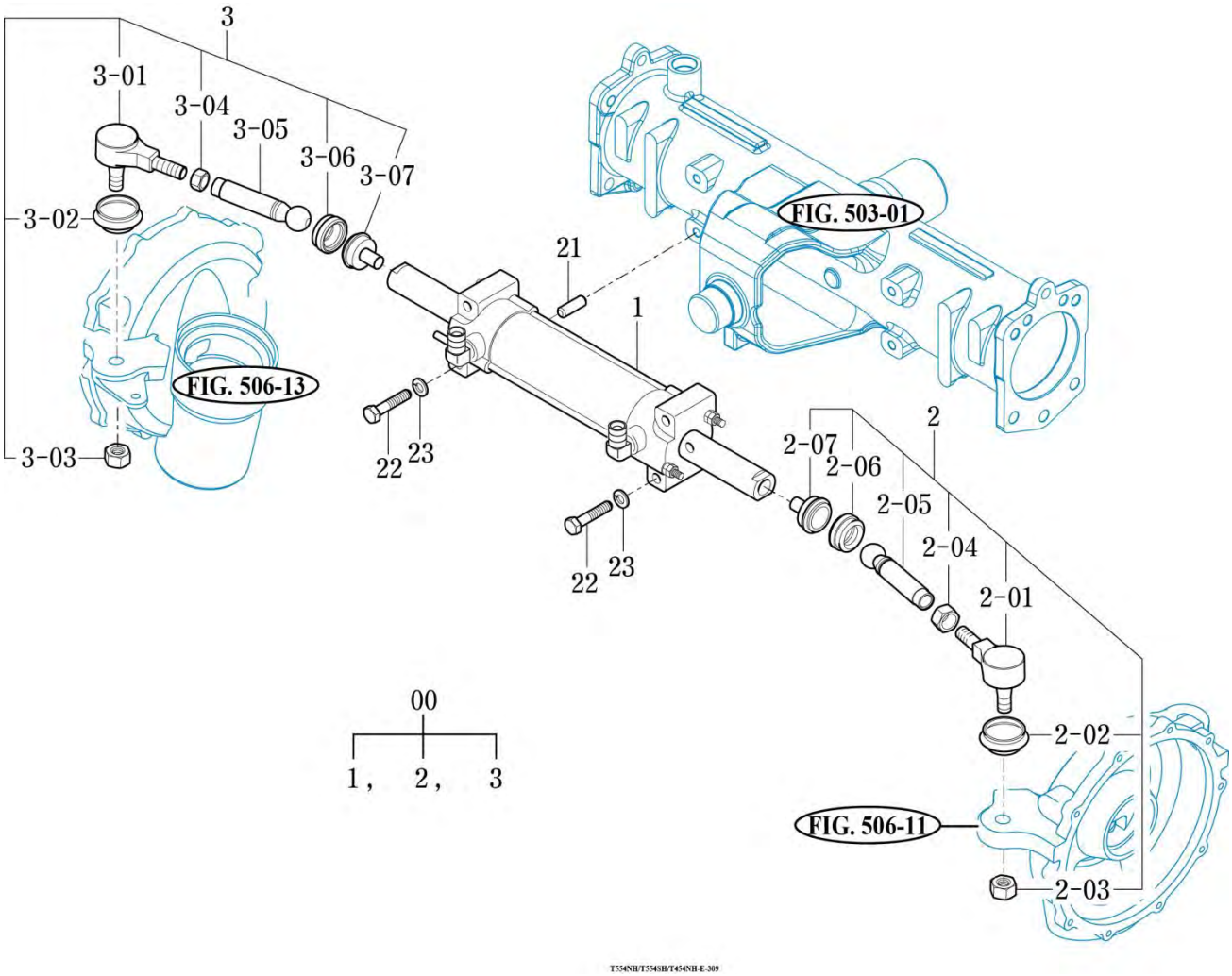

NOTE

https://truckmanualshub.com/

FIG 401 T574ST / T574NC / T494ST / T494NC	TRANSMISSION FRONT CASE	P1	YEAR 2018

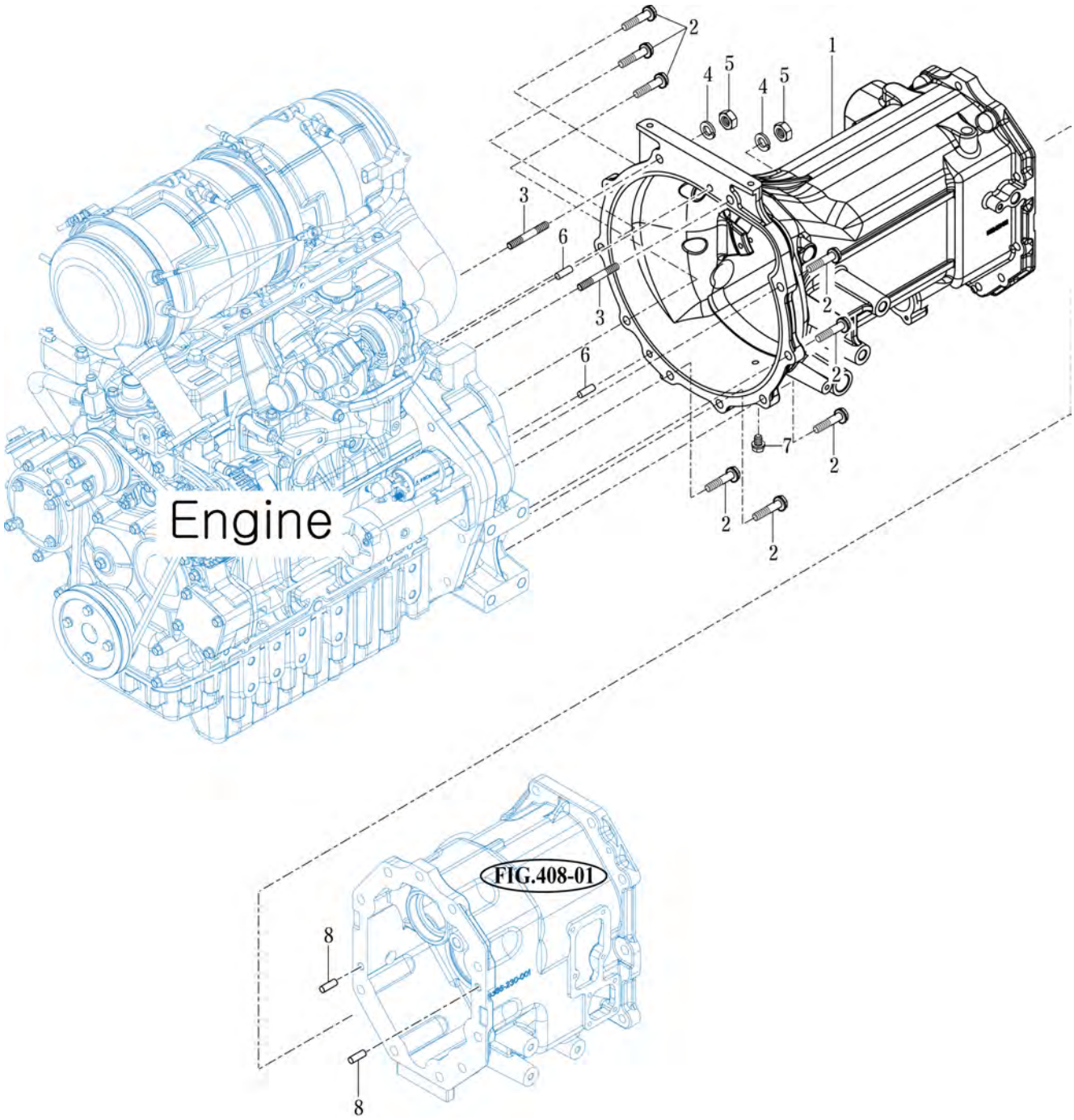

NOTE

https://truckmanualshub.com/

FIG 402 T574ST / T574NC / T494ST / T494NC	FORWARD & BACKWARD GEARS	P1	YEAR 2018	

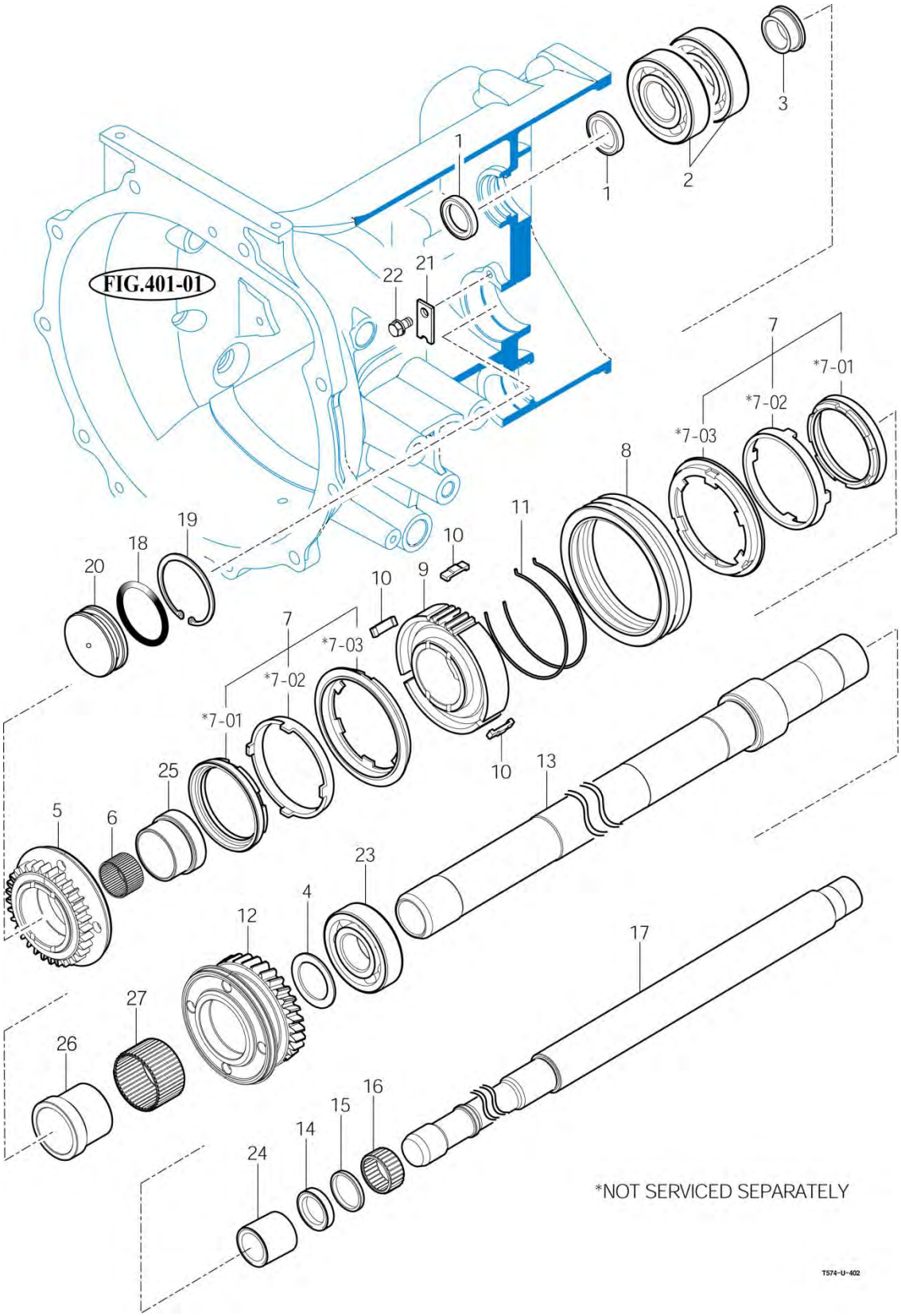

NOTE

https://truckmanualshub.com/

FIG 403 T574ST / T574NC / T494ST / T494NC	IDLE & COUNTER GEARS	P1	YEAR 2018	

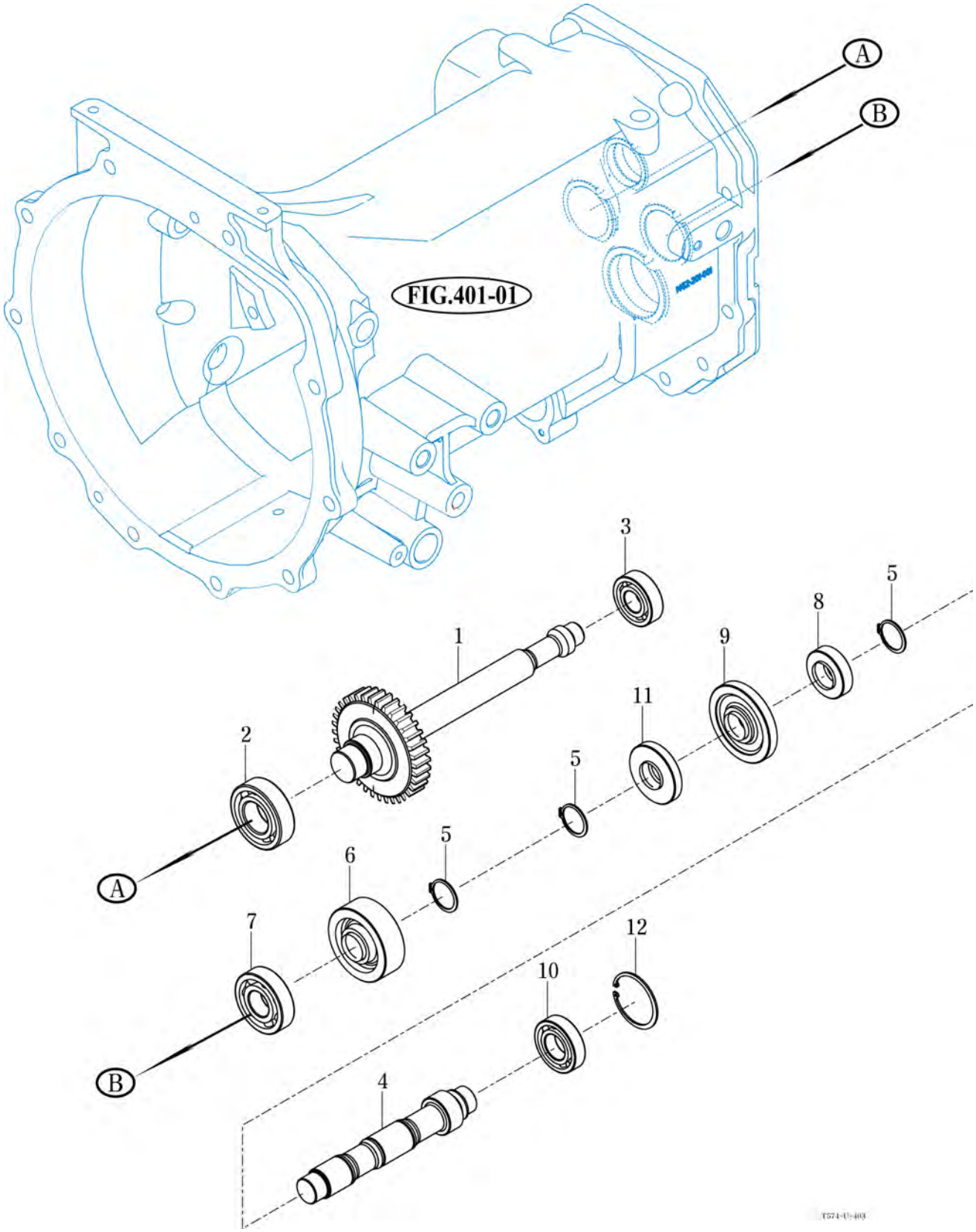

NOTE

https://truckmanualshub.com/

FIG 404 T574ST / T574NC / T494ST / T494NC	MAIN SHIFT GEARS	P1	YEAR 2018	

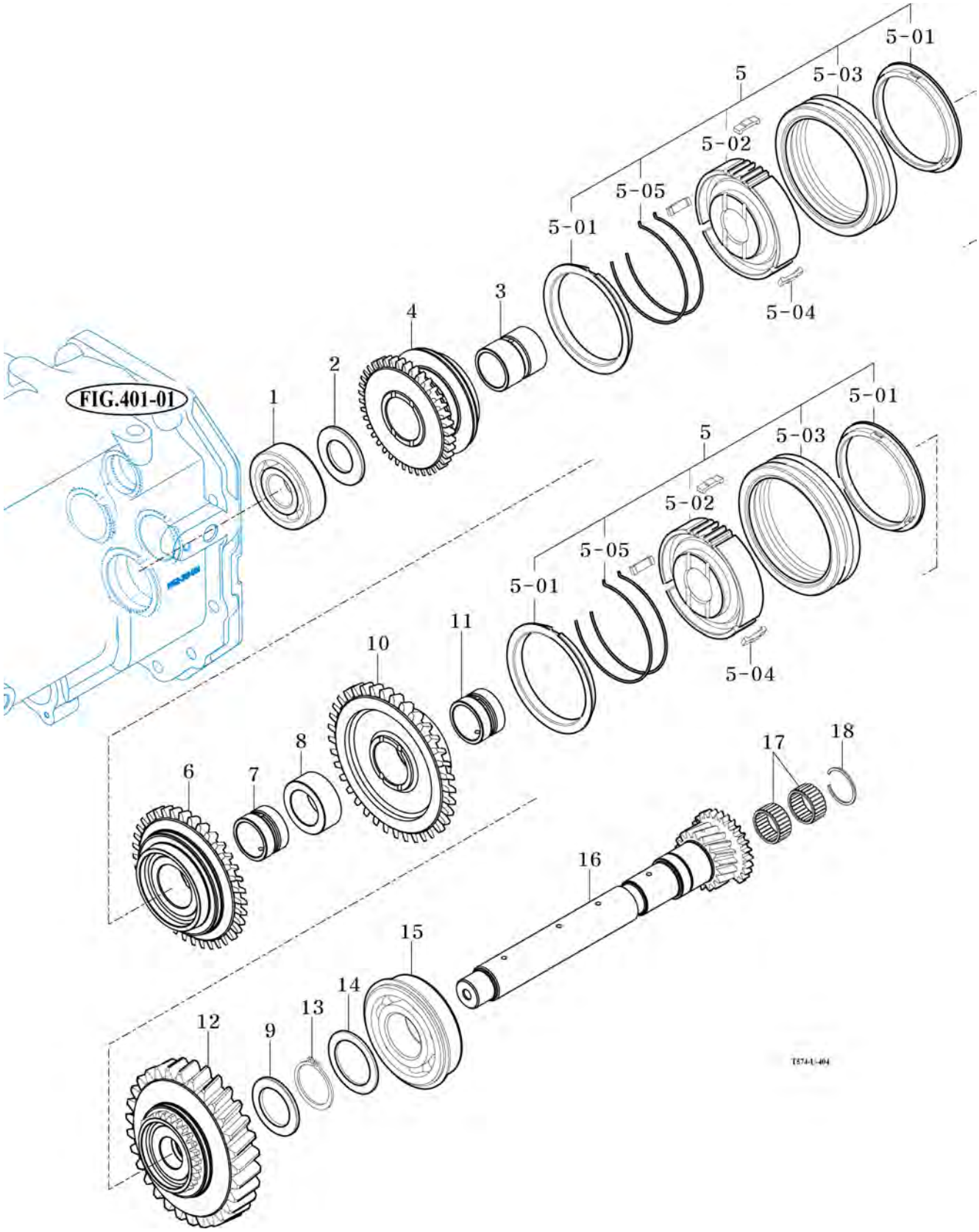

NOTE	

https://truckmanualshub.com/

FIG 405 T574ST / T574NC / T494ST / T494NC	P.T.O DRIVE SHAFT	P1	YEAR 2018	

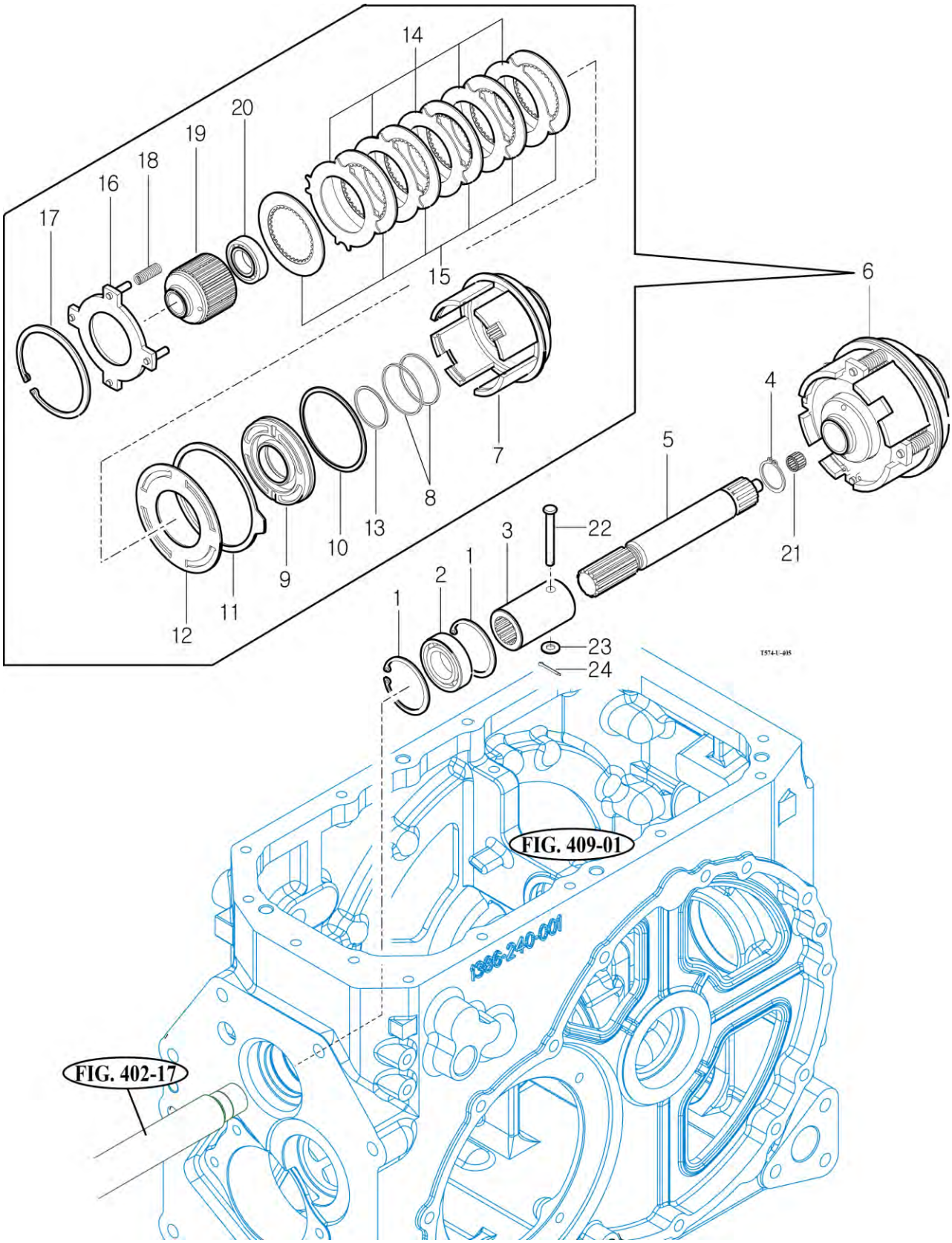

NOTE

https://truckmanualshub.com/

FIG 406 T574ST / T574NC / T494ST / T494NC	MAIN CHANGE LEVER	P1	YEAR 2018	

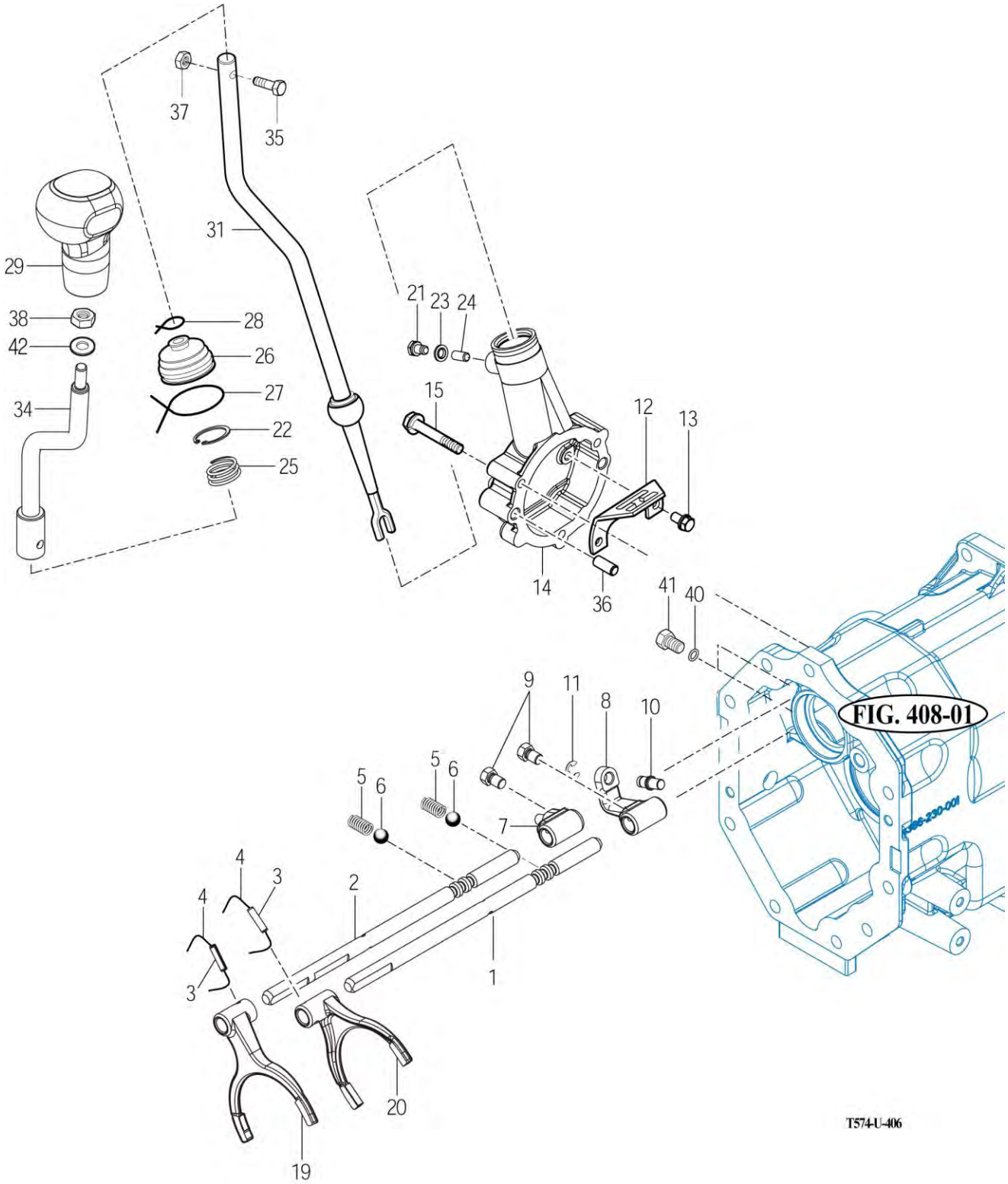

NOTE

https://truckmanualshub.com/

FIG 407 T574ST / T574NC / T494ST / T494NC	REVERSE CHANGE LEVER	P1	YEAR 2018	

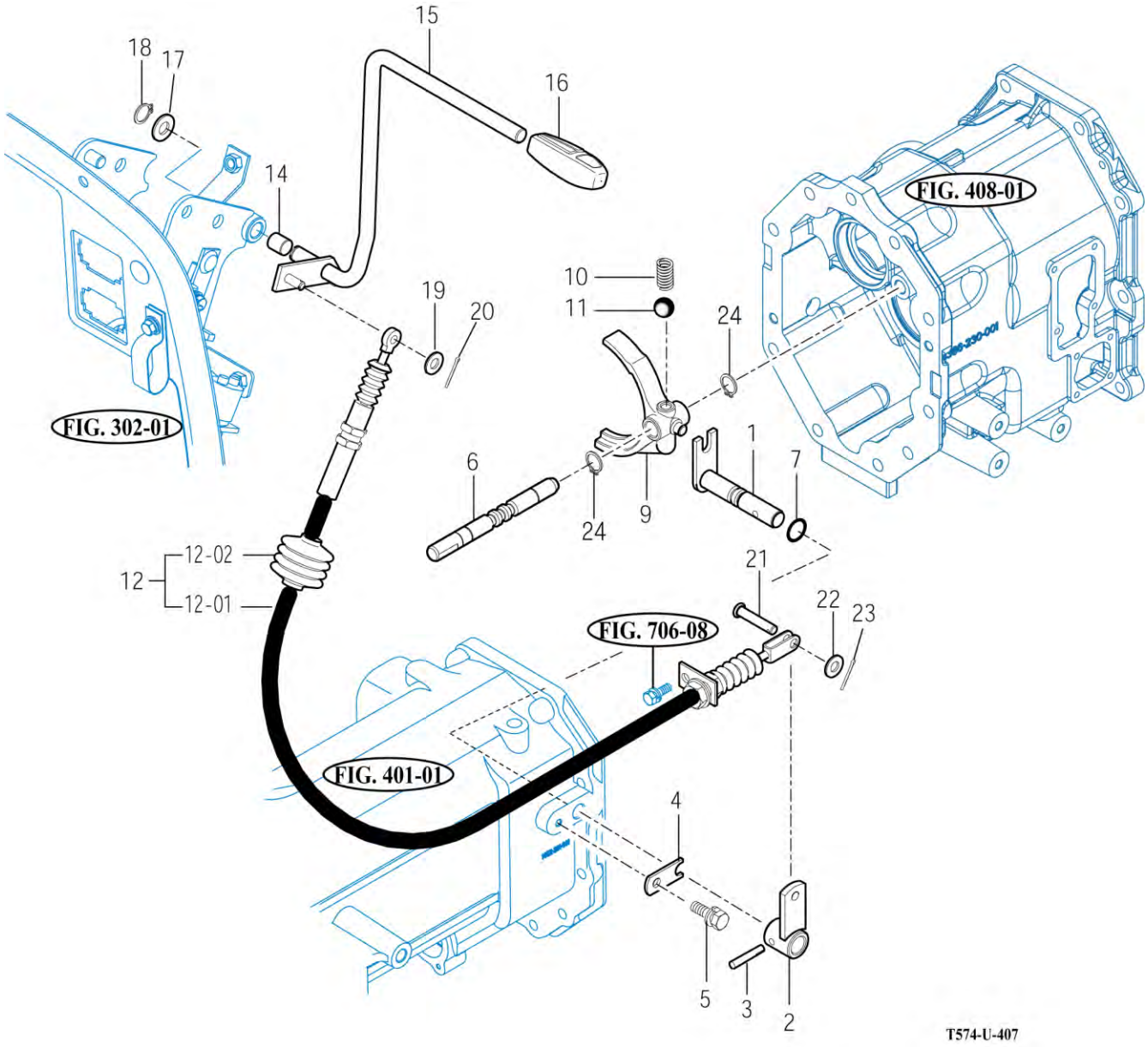

NOTE

https://truckmanualshub.com/

FIG 408 T574ST / T574NC / T494ST / T494NC	TRANSMISSION MID CASE	P1	YEAR 2018	

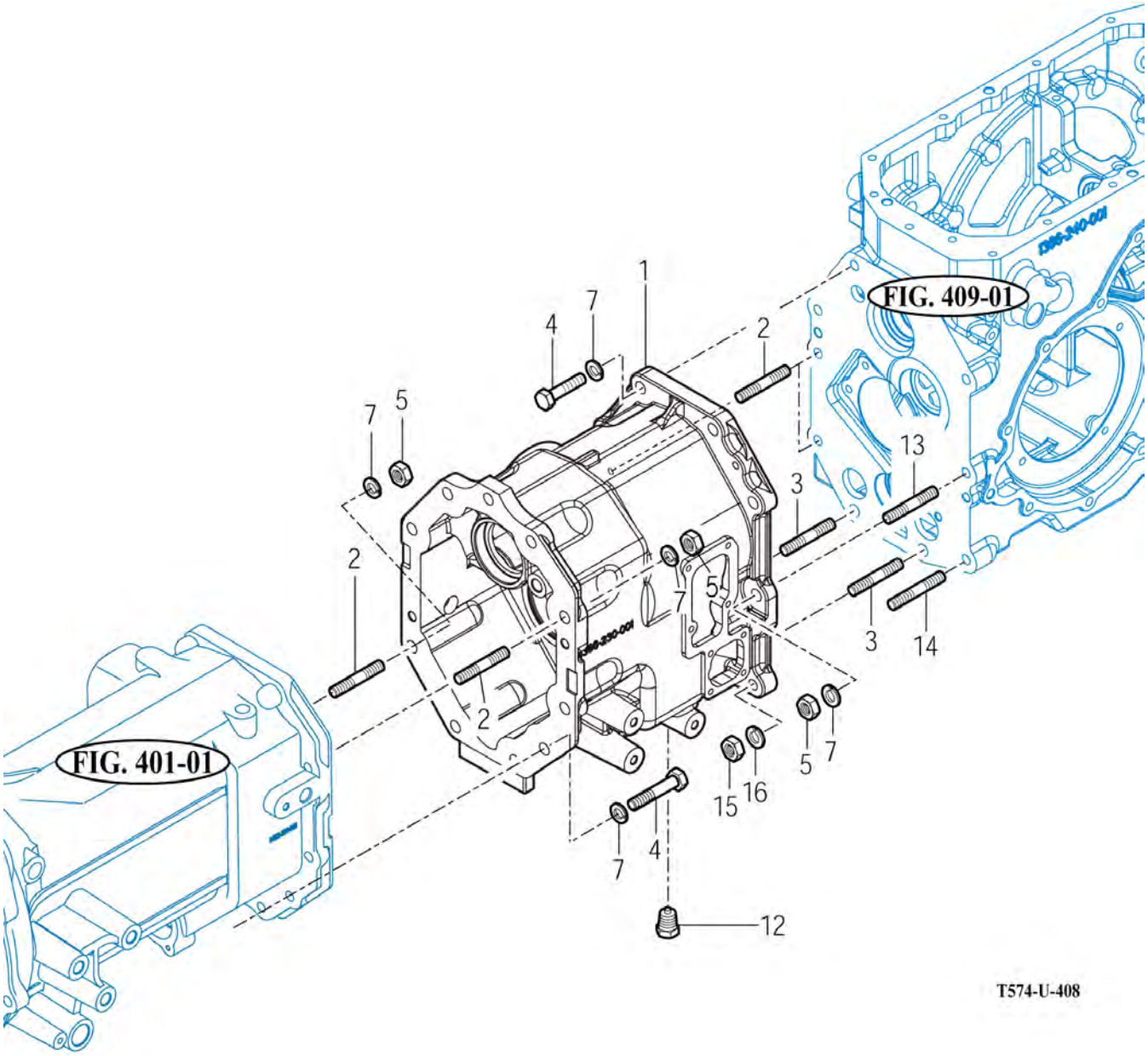

NOTE

https://truckmanualshub.com/

FIG 409 T574ST / T574NC / T494ST / T494NC	TRANSMISSION REAR CASE	P1	YEAR 2018

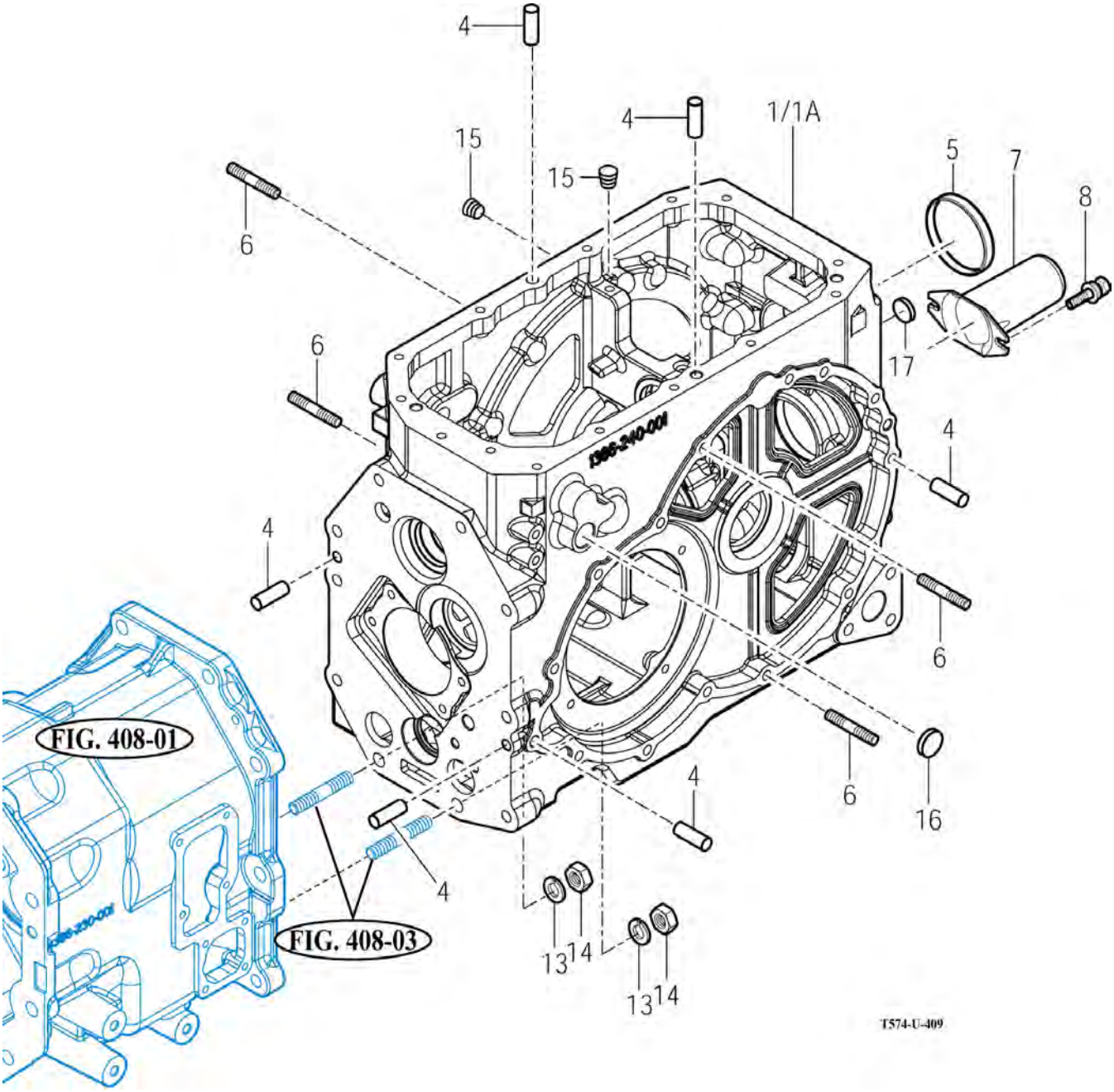

NOTE

https://truckmanualshub.com/

FIG 410 T574ST / T574NC / T494ST / T494NC	SUB CHANGE GEARS	P1	YEAR 2018	

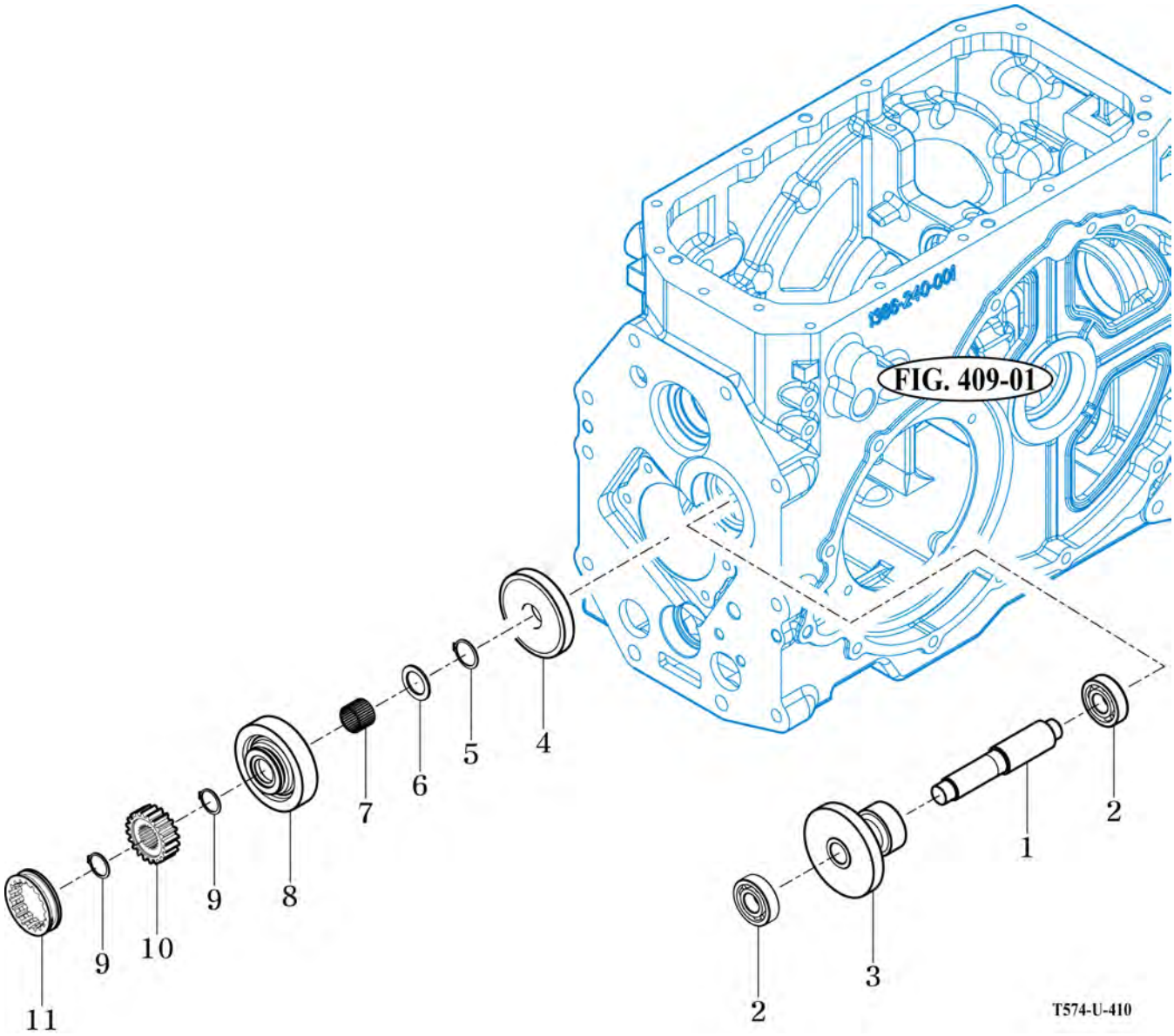

NOTE

https://truckmanualshub.com/

FIG 411 T574ST / T574NC / T494ST / T494NC	SUB CHANGE SHIFTER	P1	YEAR 2018	

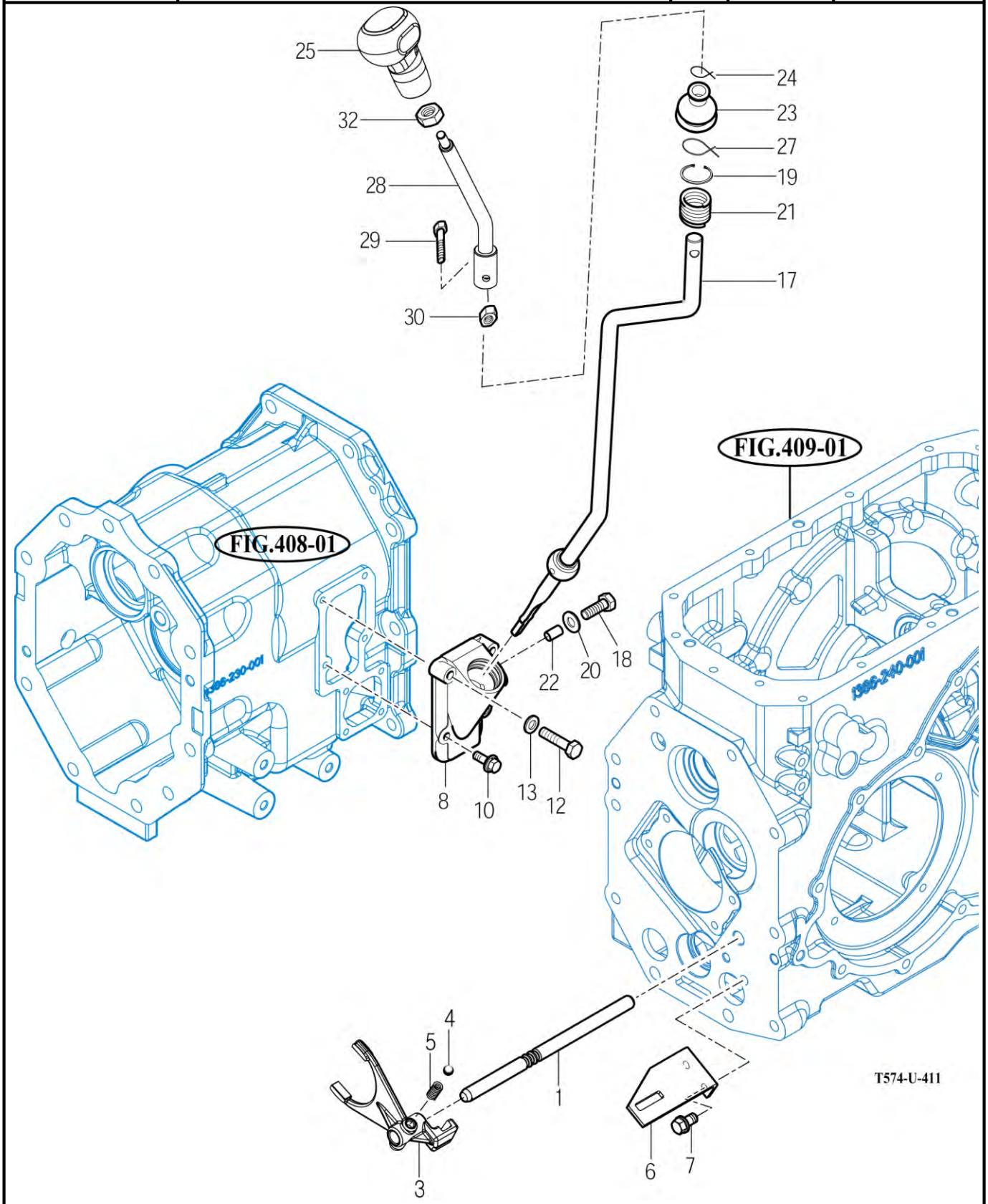

NOTE

https://truckmanualshub.com/

FIG 413 T574ST / T574NC / T494ST / T494NC	DRIVE GEARS	P1	YEAR 2018	

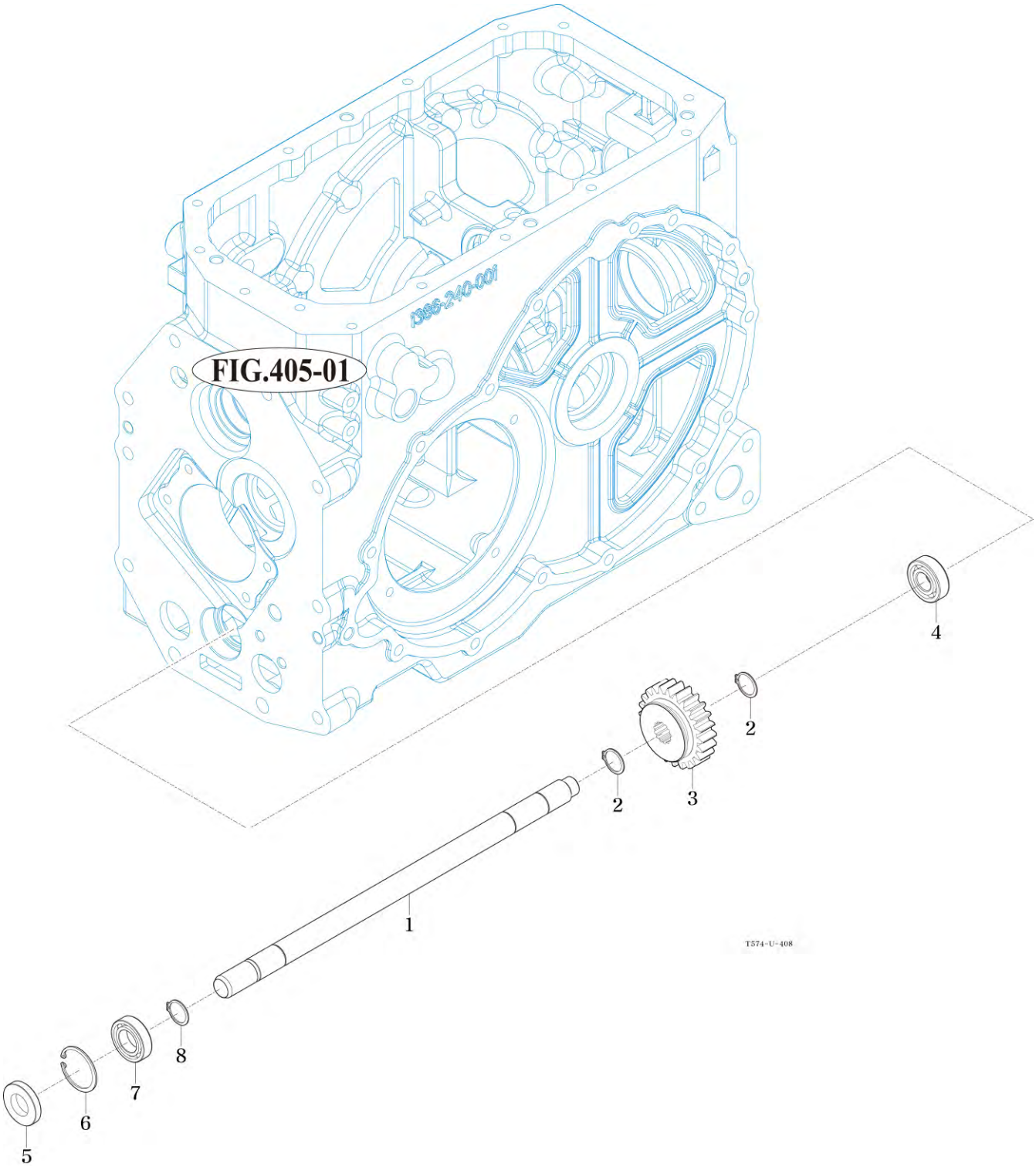

NOTE

https://truckmanualshub.com/

FIG 414 T574ST / T574NC / T494ST / T494NC	4WD CHANGE LEVER	P1	YEAR 2018	

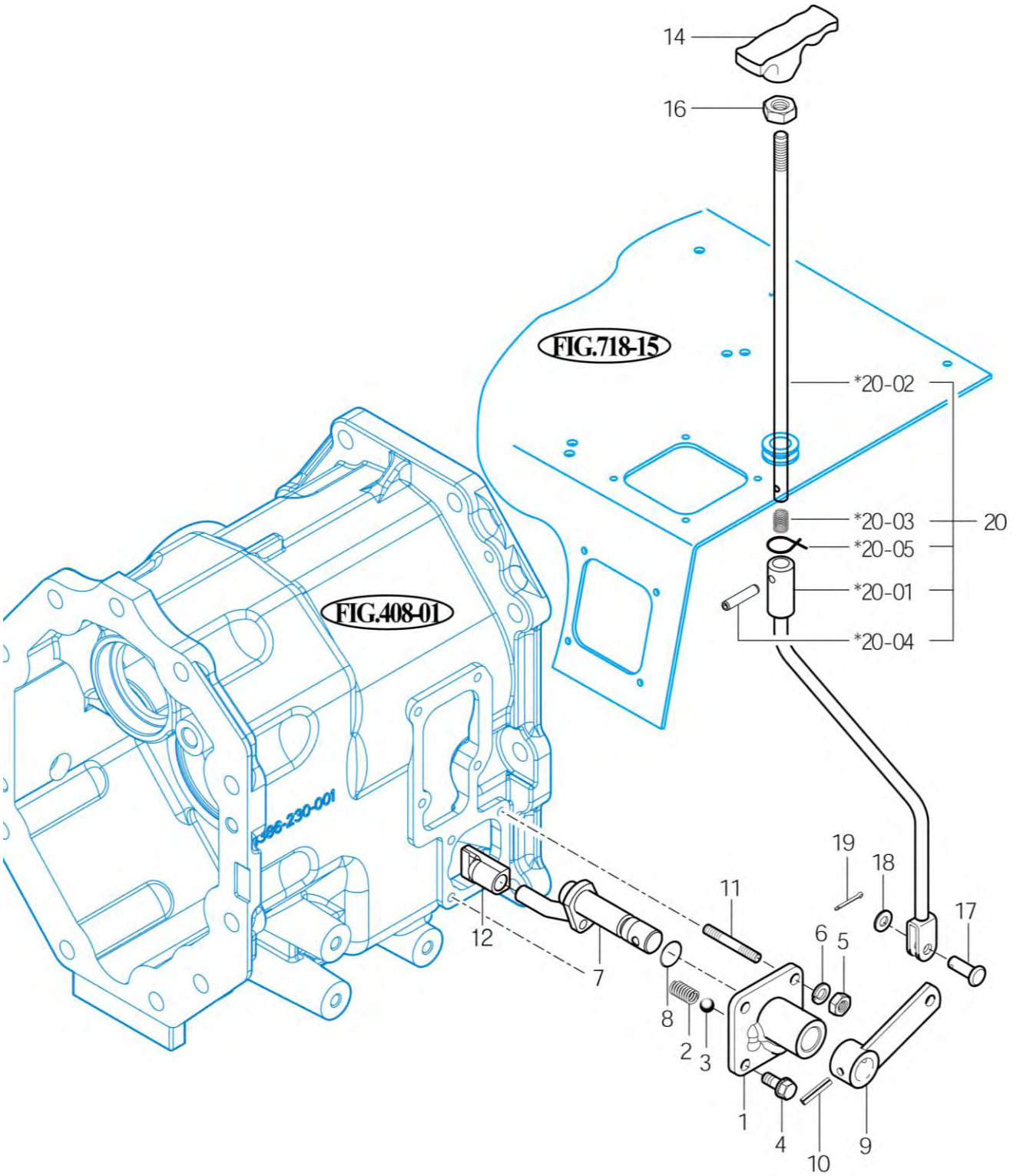

*NOT SERVICED SEPARATELY

T483-E-414A

NOTE	

https://truckmanualshub.com/

FIG 415 T574ST / T574NC / T494ST / T494NC	P.T.O CHANGE GEARS	P1	YEAR 2018	

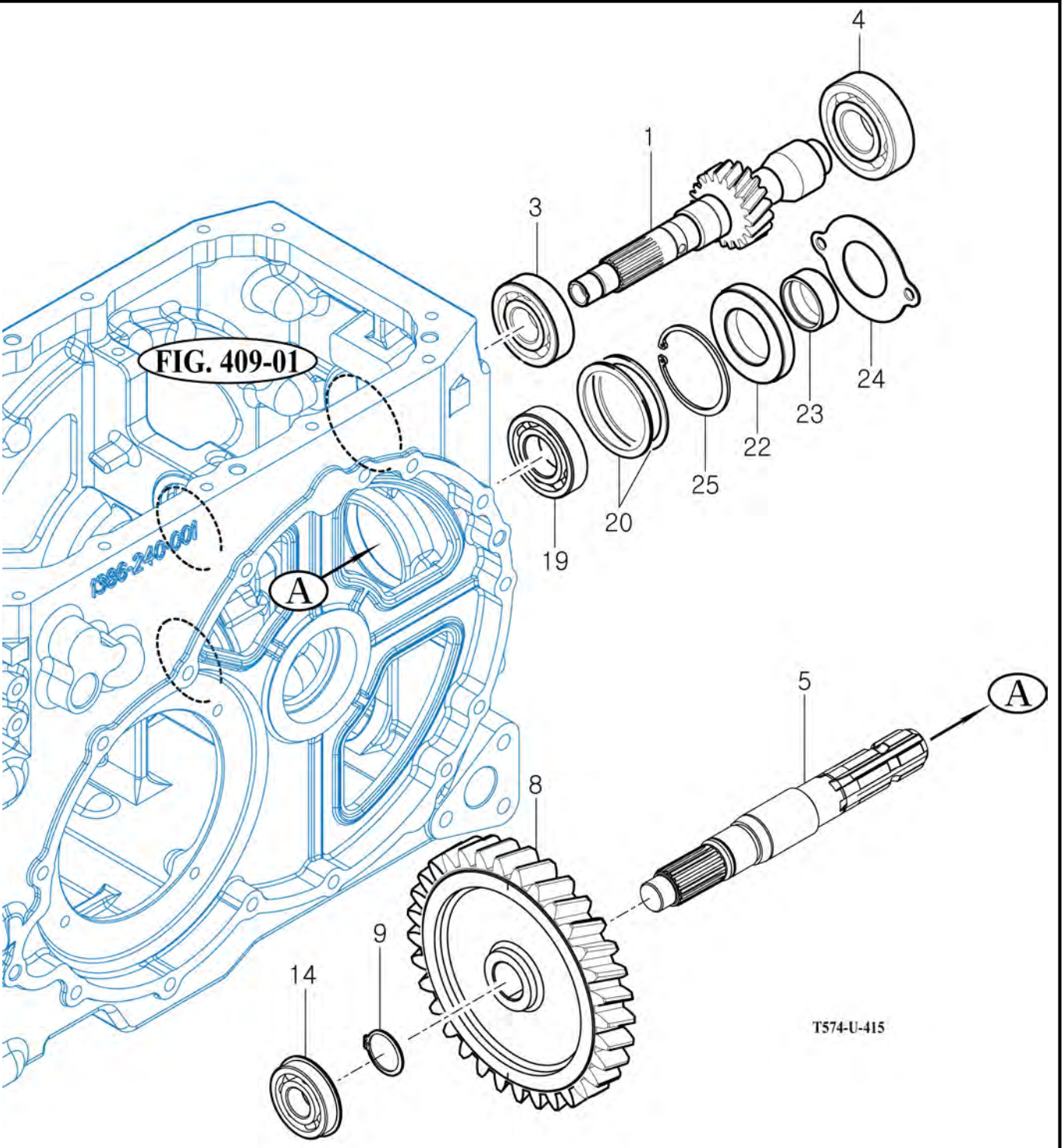

NOTE

https://truckmanualshub.com/

FIG 417 T574ST / T574NC / T494ST / T494NC	REAR DIFFERENTIAL GEARS	P1	YEAR 2018	

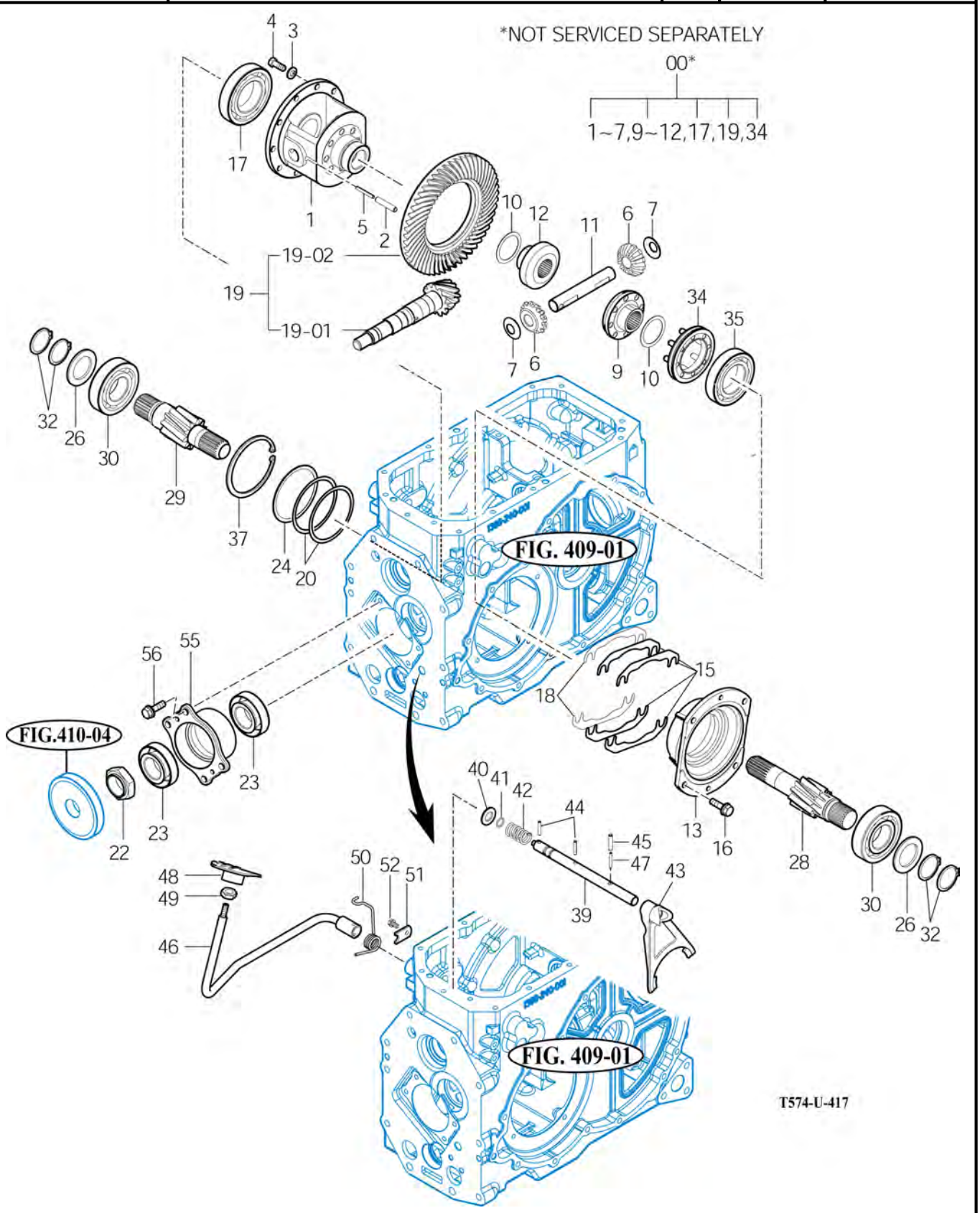

NOTE

https://truckmanualshub.com/

FIG 418 T574ST / T574NC / T494ST / T494NC	REAR AXLE HOUSING	P1	YEAR 2018	

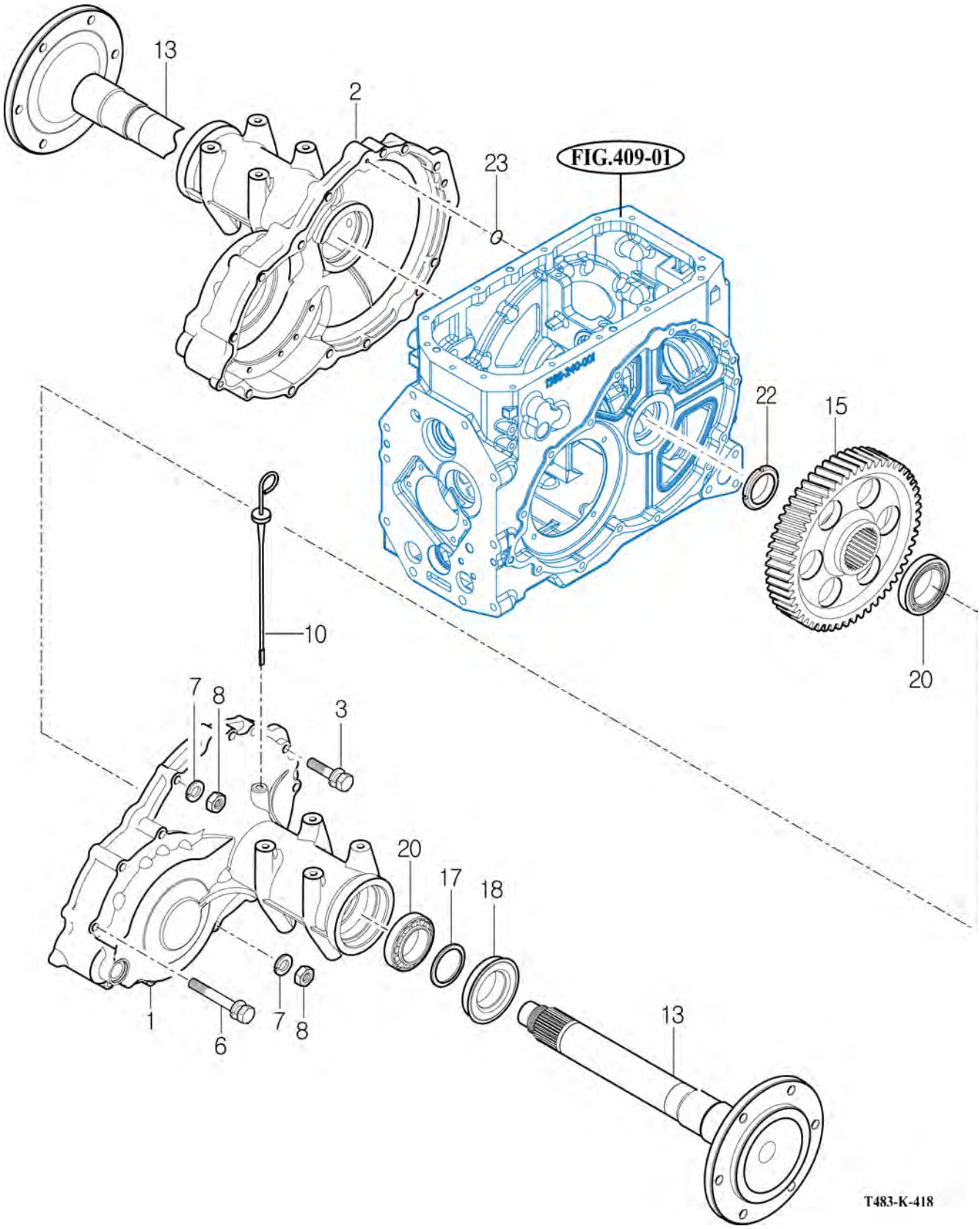

NOTE

https://truckmanualshub.com/

FIG 501

T574ST / T574NC / T494ST / T494NC

FRONT AXLE SUPPORT

P1

YEAR

2018

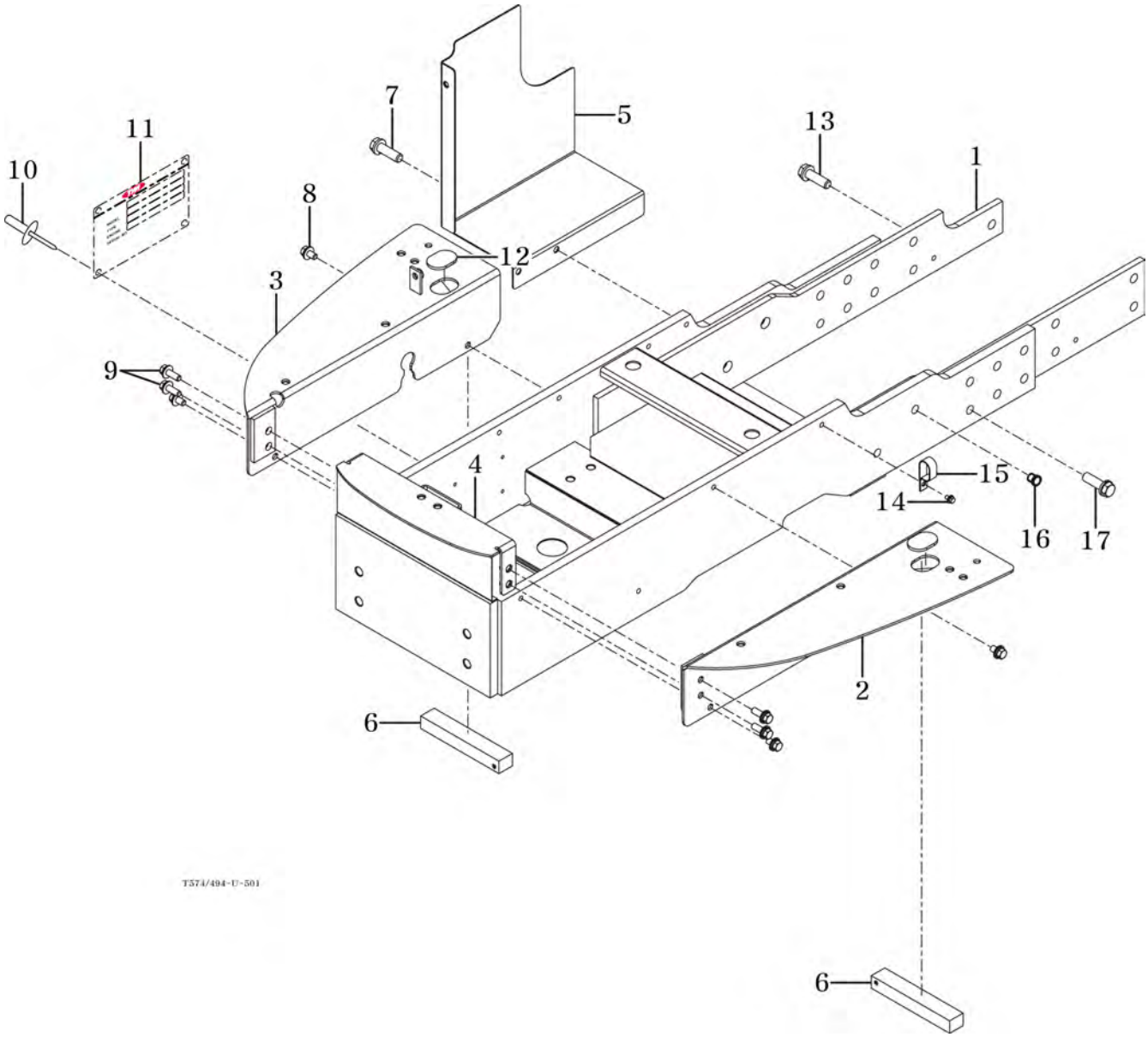

NOTE

https://truckmanualshub.com/

FIG 502

T574ST / T574NC / T494ST / T494NC

FRONT DRIVE SHAFT

P1

YEAR

2018

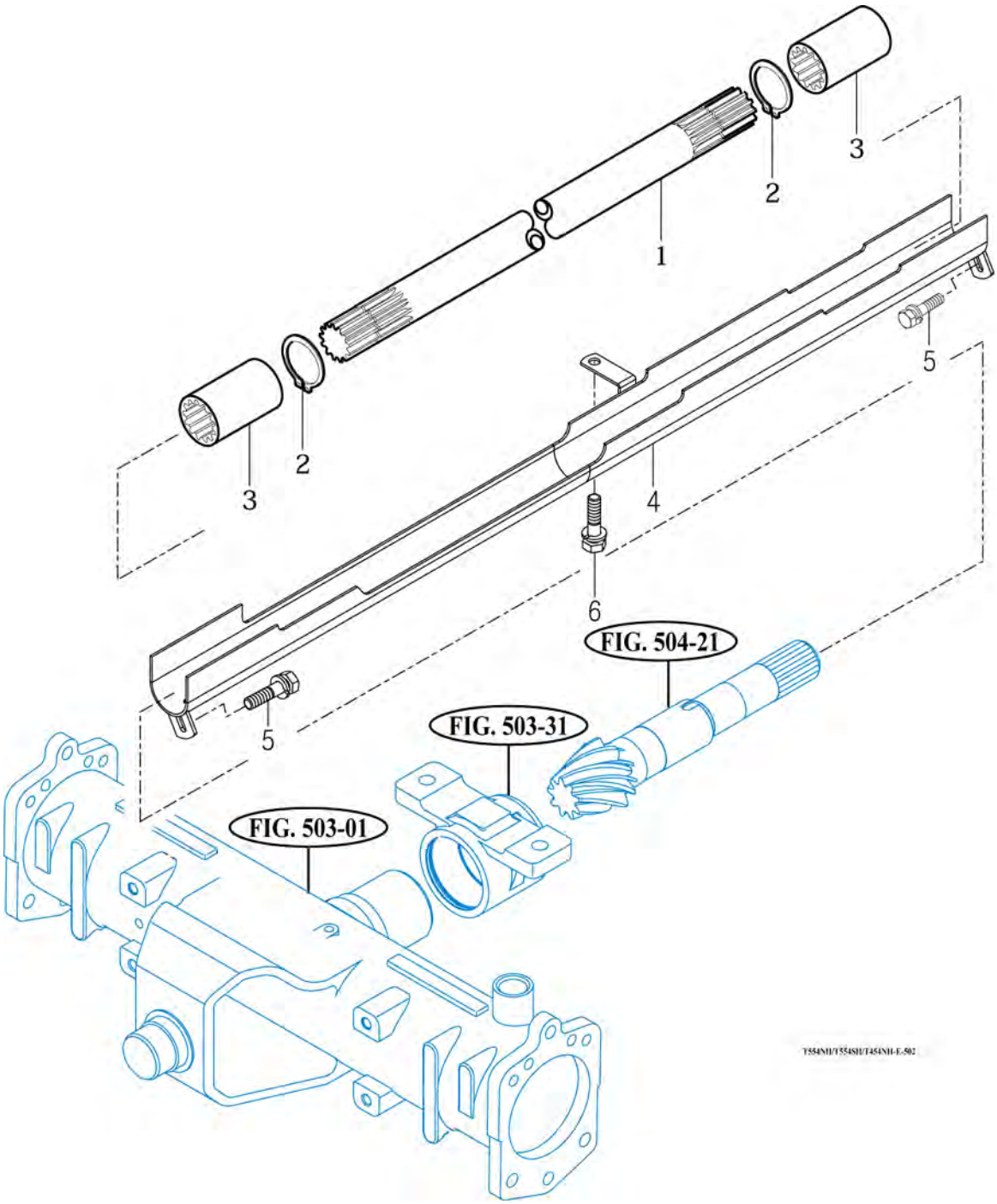

NOTE

https://truckmanualshub.com/

FIG 503 T574ST / T574NC / T494ST / T494NC	FRONT AXLE HOUSING	P1	YEAR 2018	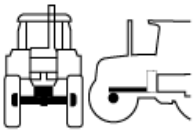

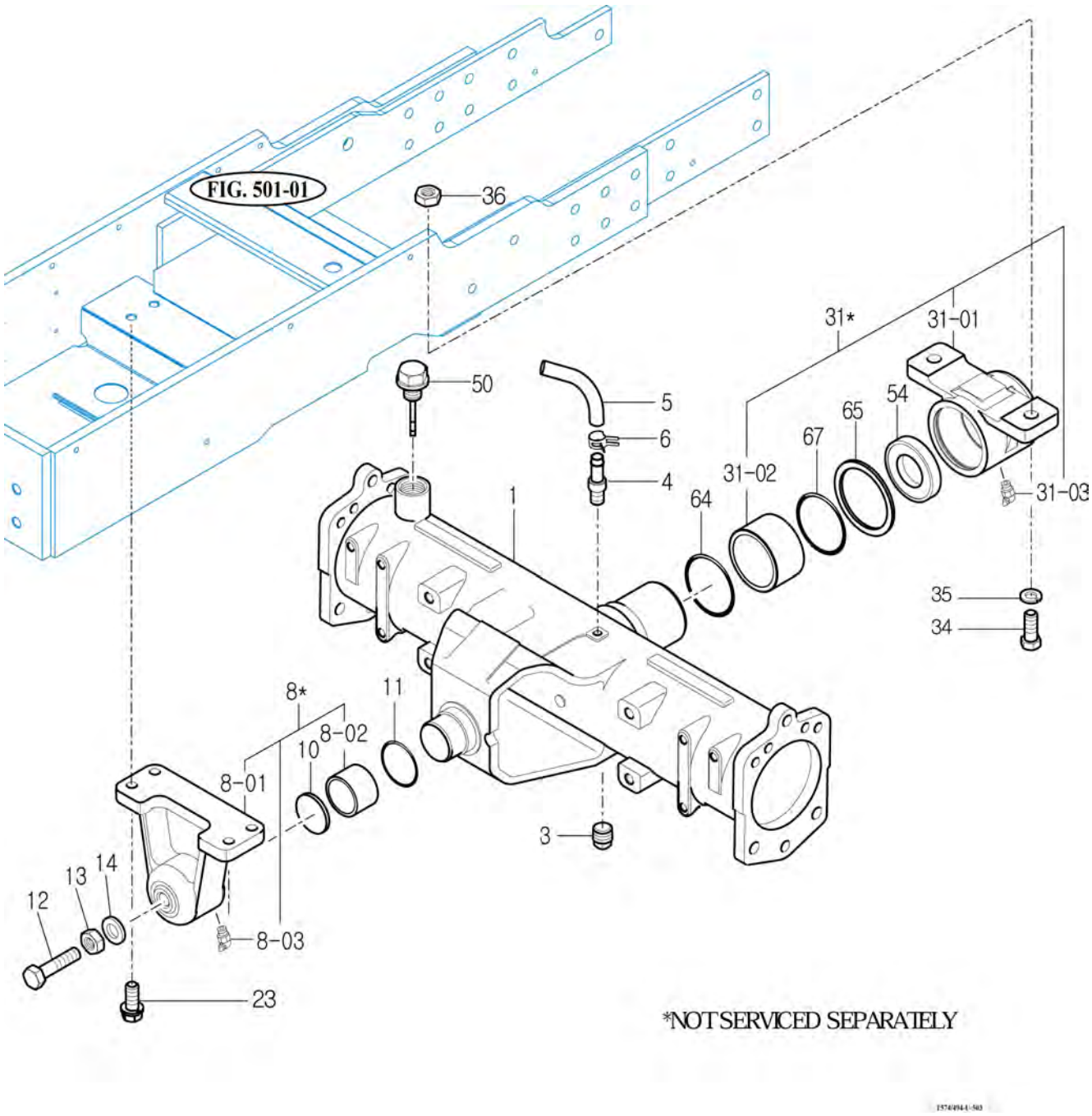

NOTE

FIG 504

T574ST / T574NC / T494ST / T494NC

FRONT DIFFERENTIAL GEARS

P1

YEAR

2018

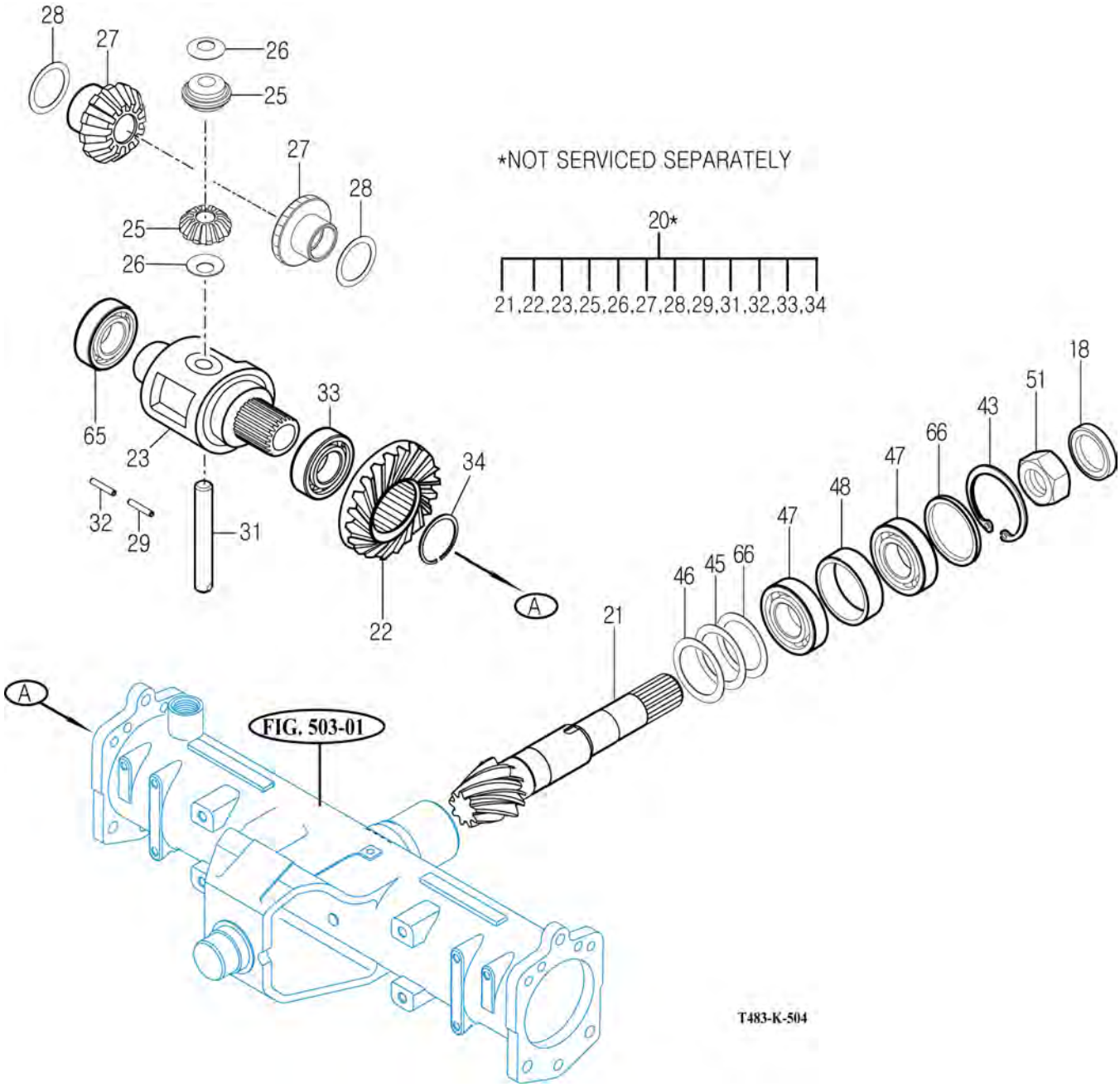

NOTE

https://truckmanualshub.com/

FIG 505

T574ST / T574NC / T494ST / T494NC

FRONT GEAR CASE (1)

P1

YEAR

2018

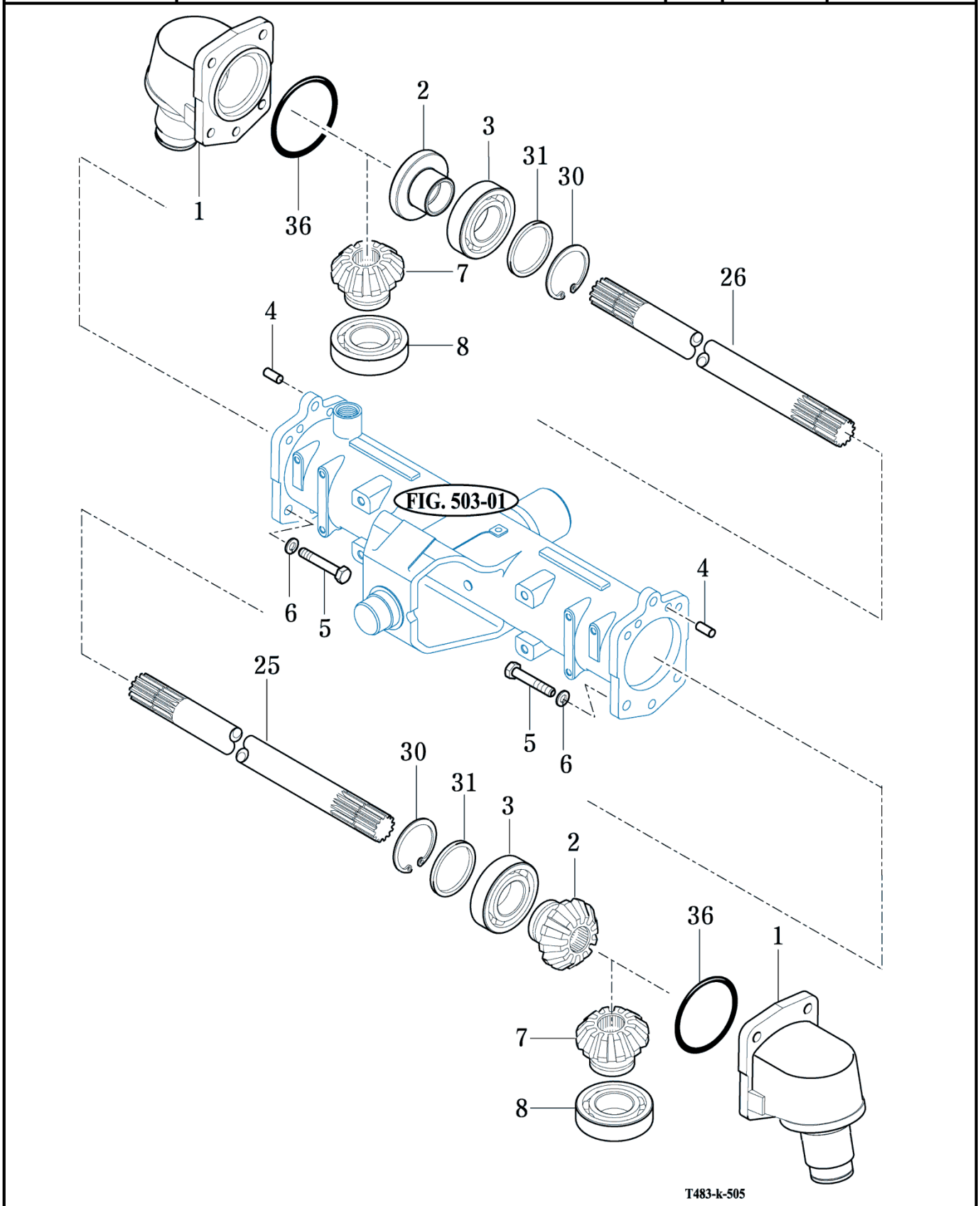

NOTE

FIG 506 T574ST / T574NC / T494ST / T494NC	FRONT GEAR CASE (2)	P1	YEAR 2018	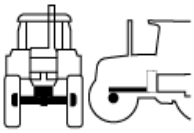

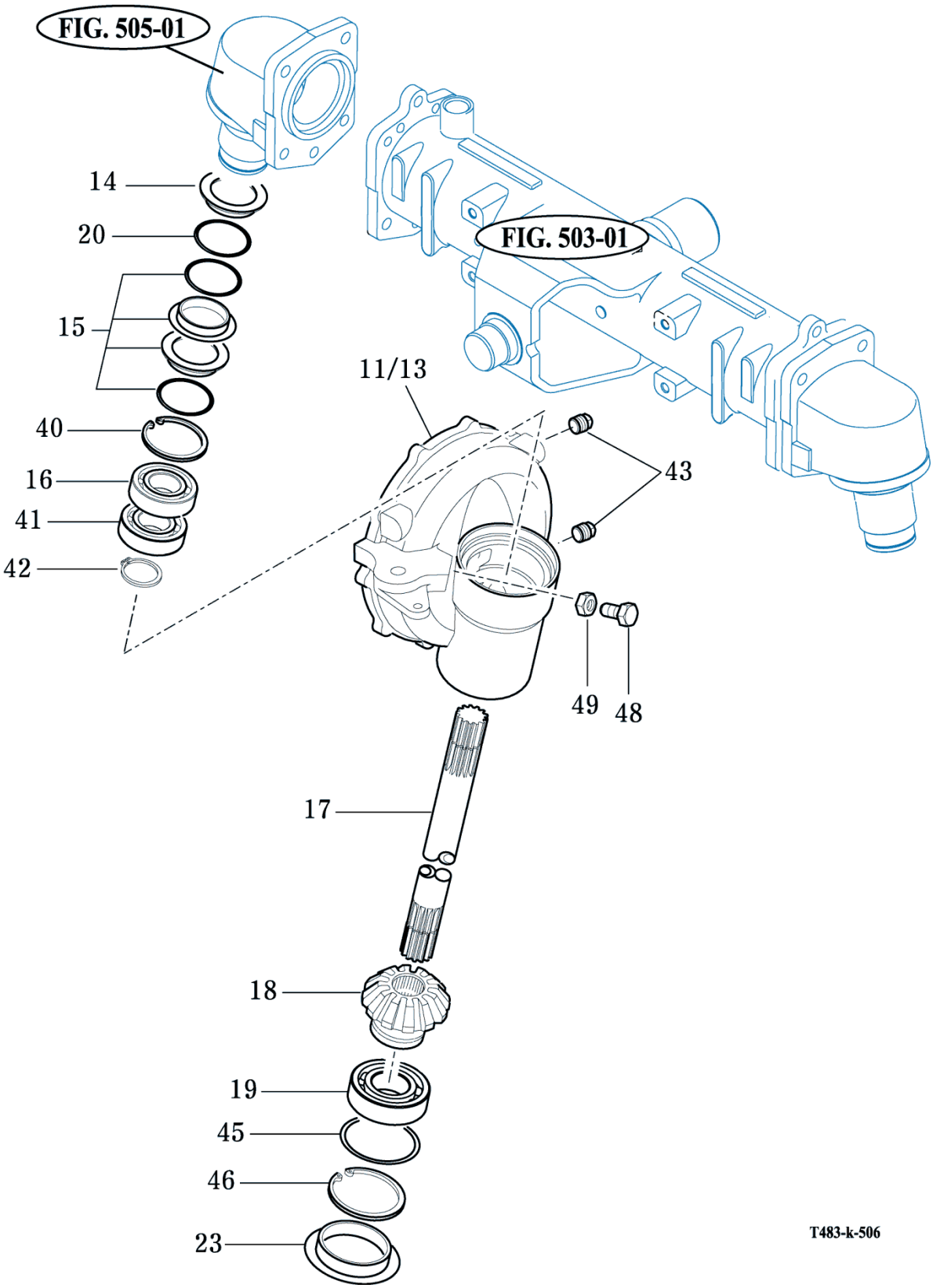

NOTE

https://truckmanualshub.com/

FIG 507

T574ST / T574NC / T494ST / T494NC

FRONT GEAR CASE (3)

P1

YEAR

2018

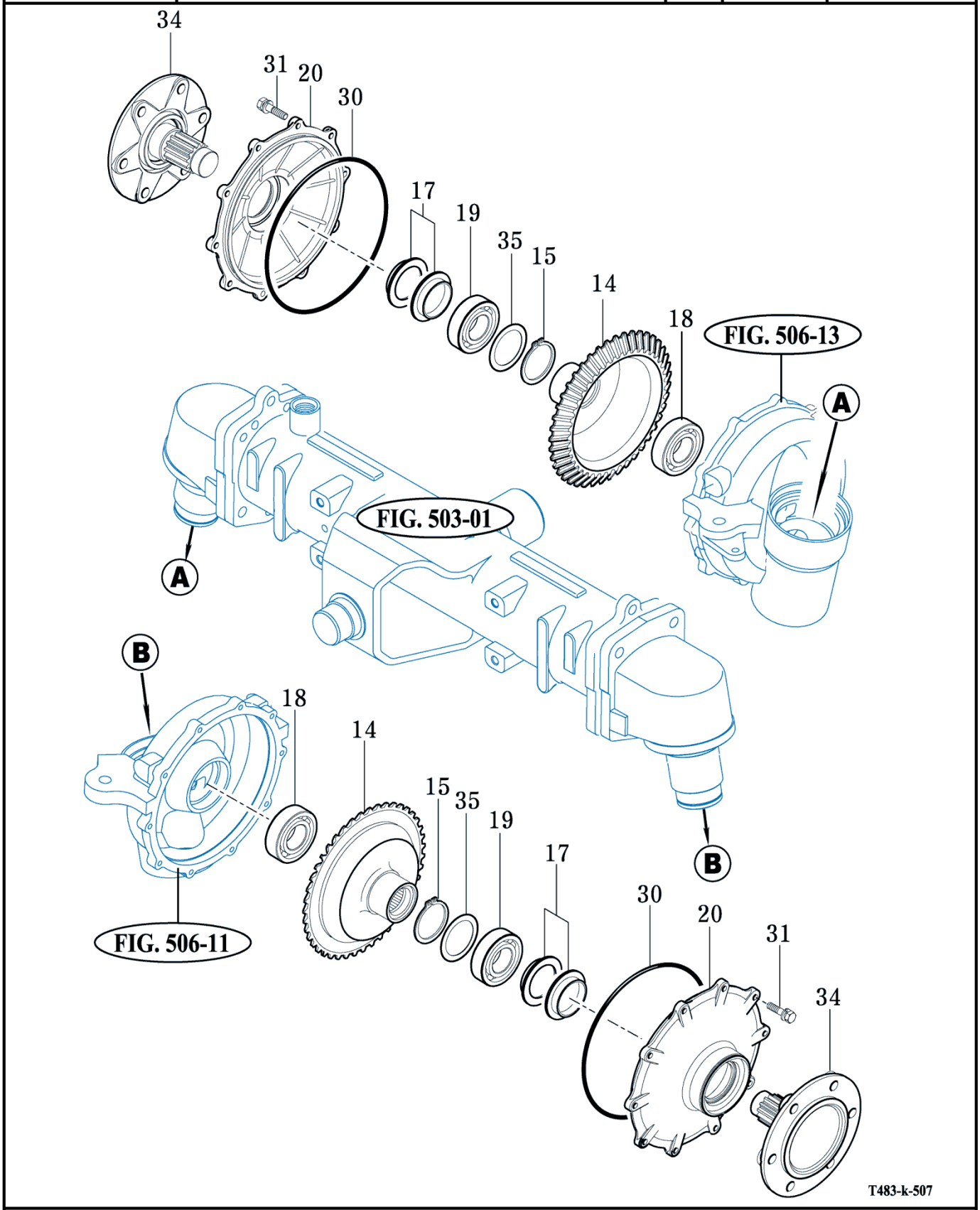

NOTE

https://truckmanualshub.com/

FIG 601

T574ST / T574NC / T494ST / T494NC

CYLINDER CASE

P1

YEAR

2018

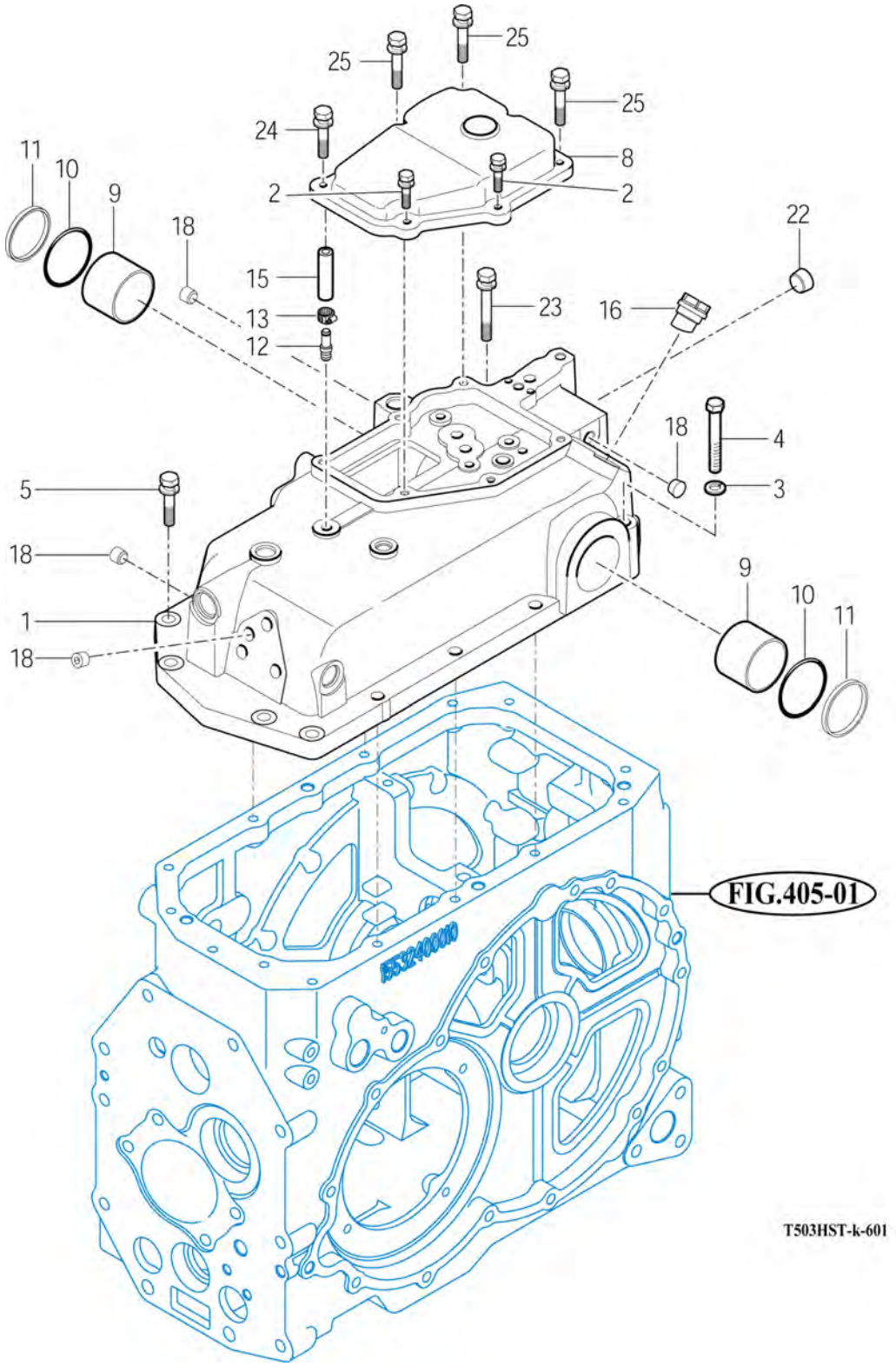

NOTE

FIG 602

T574ST / T574NC / T494ST / T494NC

LIFT ARM

P1

YEAR

2018

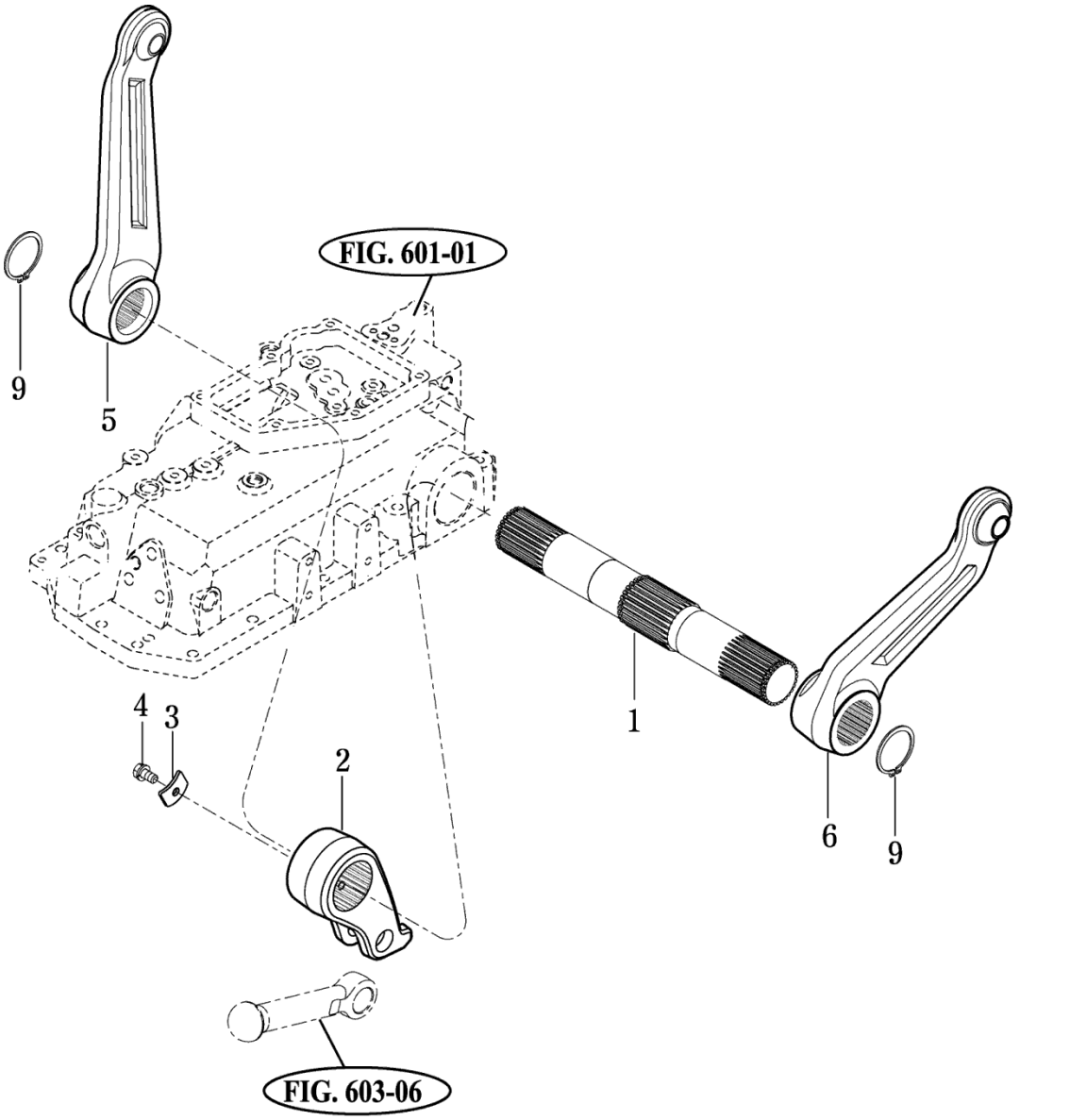

NOTE

FIG 603

T574ST / T574NC / T494ST / T494NC

CYLINDER

P1

YEAR

2018

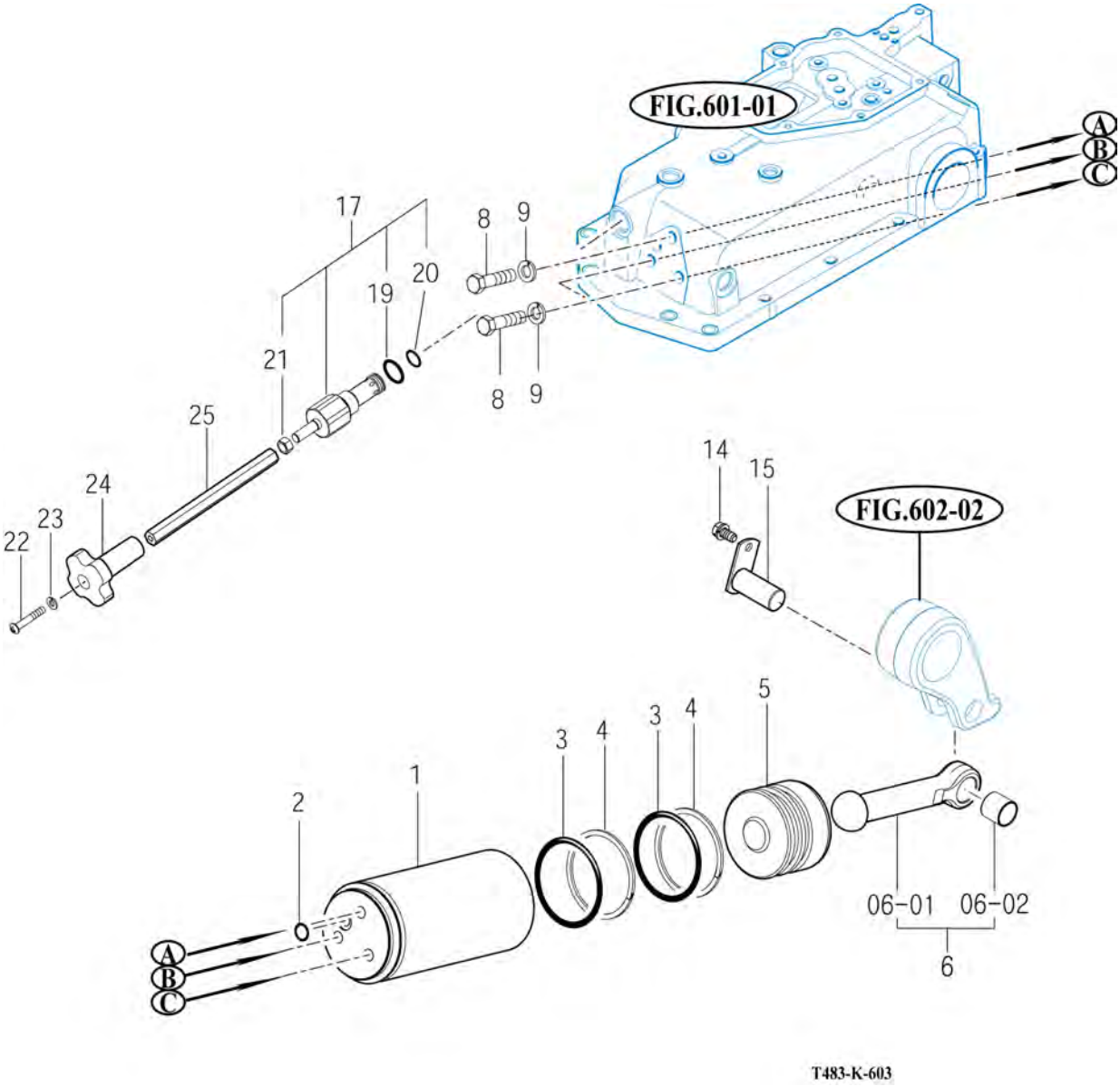

NOTE

https://truckmanualshub.com/

FIG 604

T574ST / T574NC / T494ST / T494NC

POSITION LINK

P1

YEAR

2018

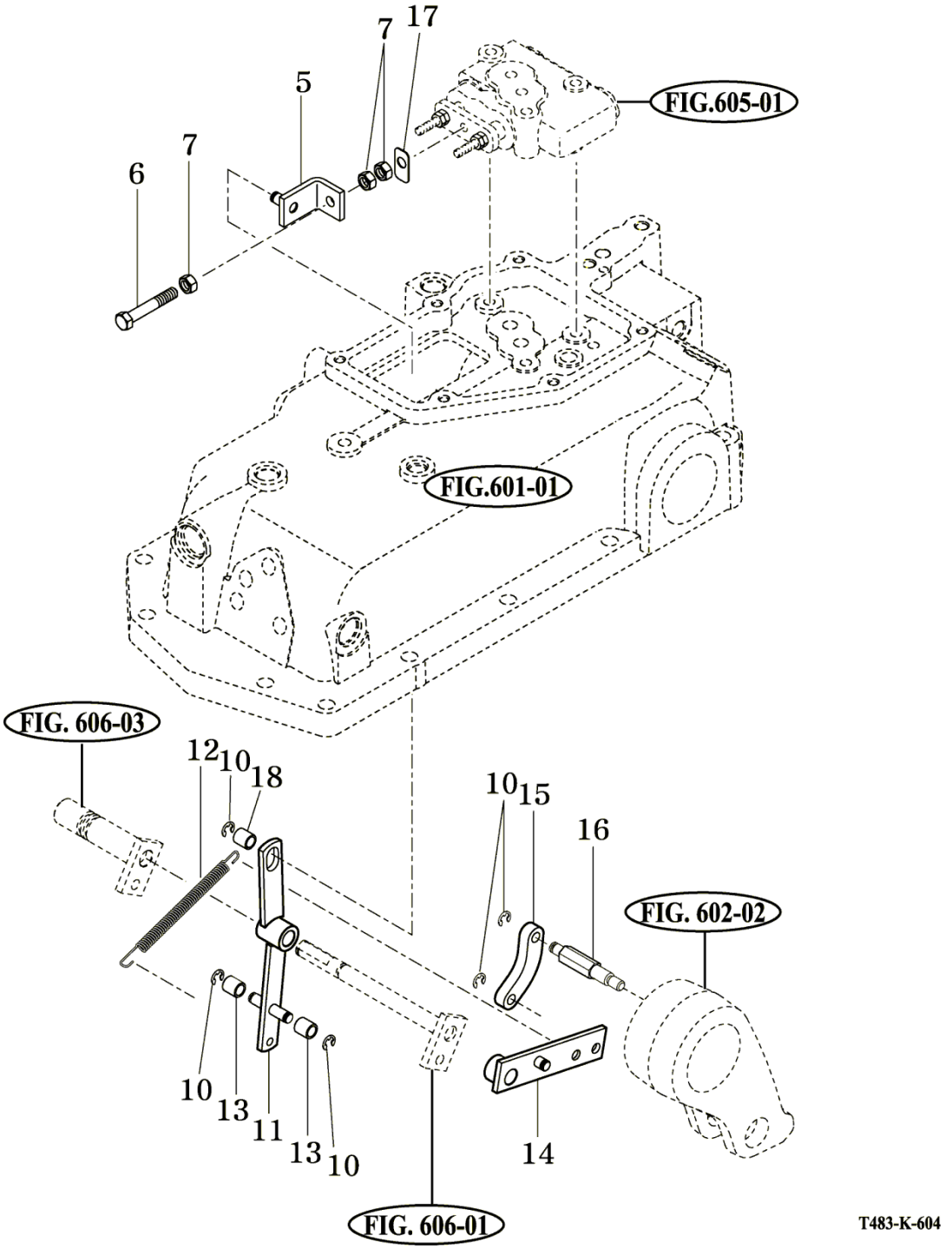

NOTE

https://truckmanualshub.com/

CONTROL VALVE

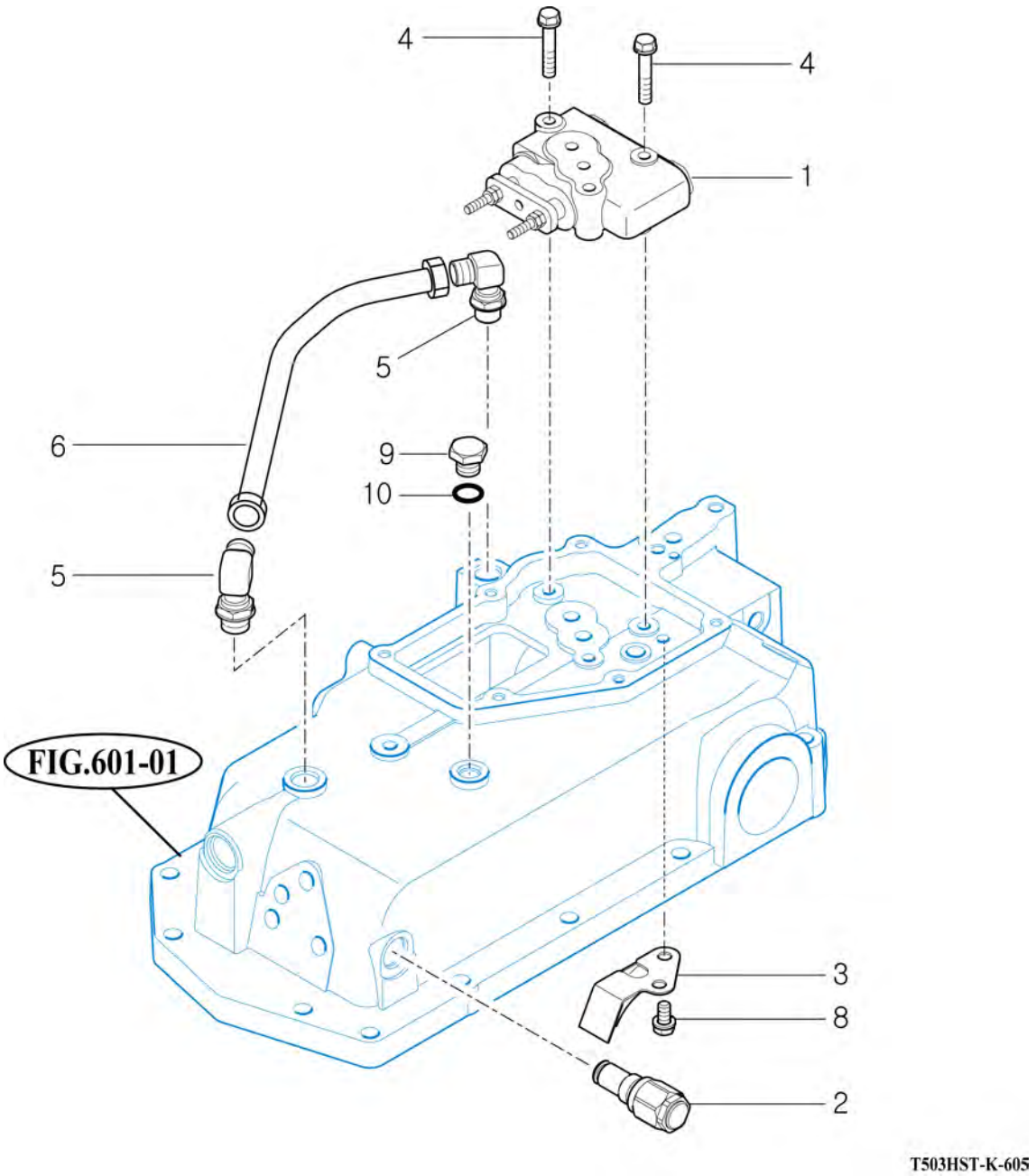

NOTE

FIG 606

T574ST / T574NC / T494ST / T494NC

DRAFT LINK

P1

YEAR

2018

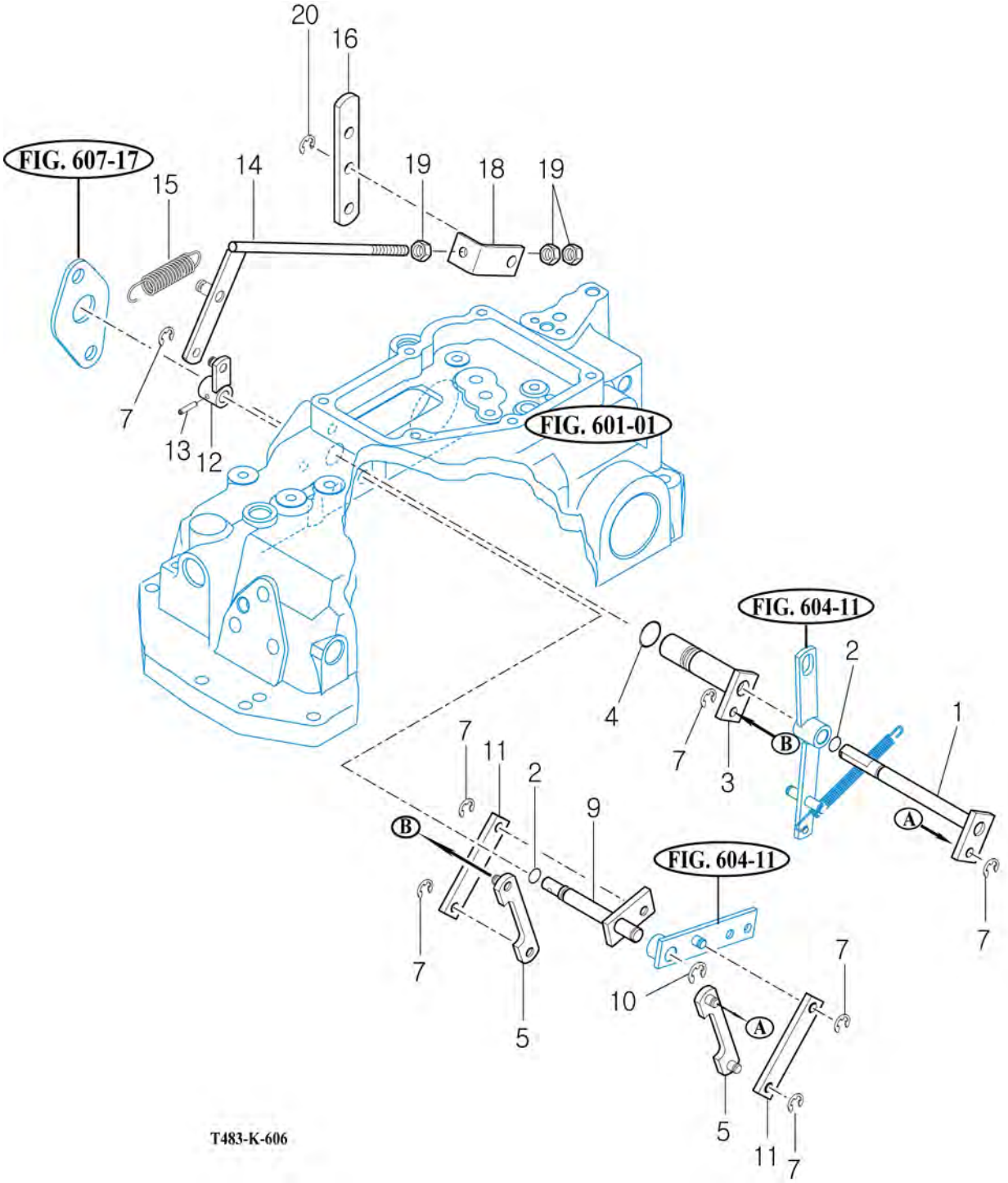

NOTE

https://truckmanualshub.com/

FIG 607

T574ST / T574NC / T494ST / T494NC

POSITION & DRAFT LEVER(1)

P1

YEAR

2018

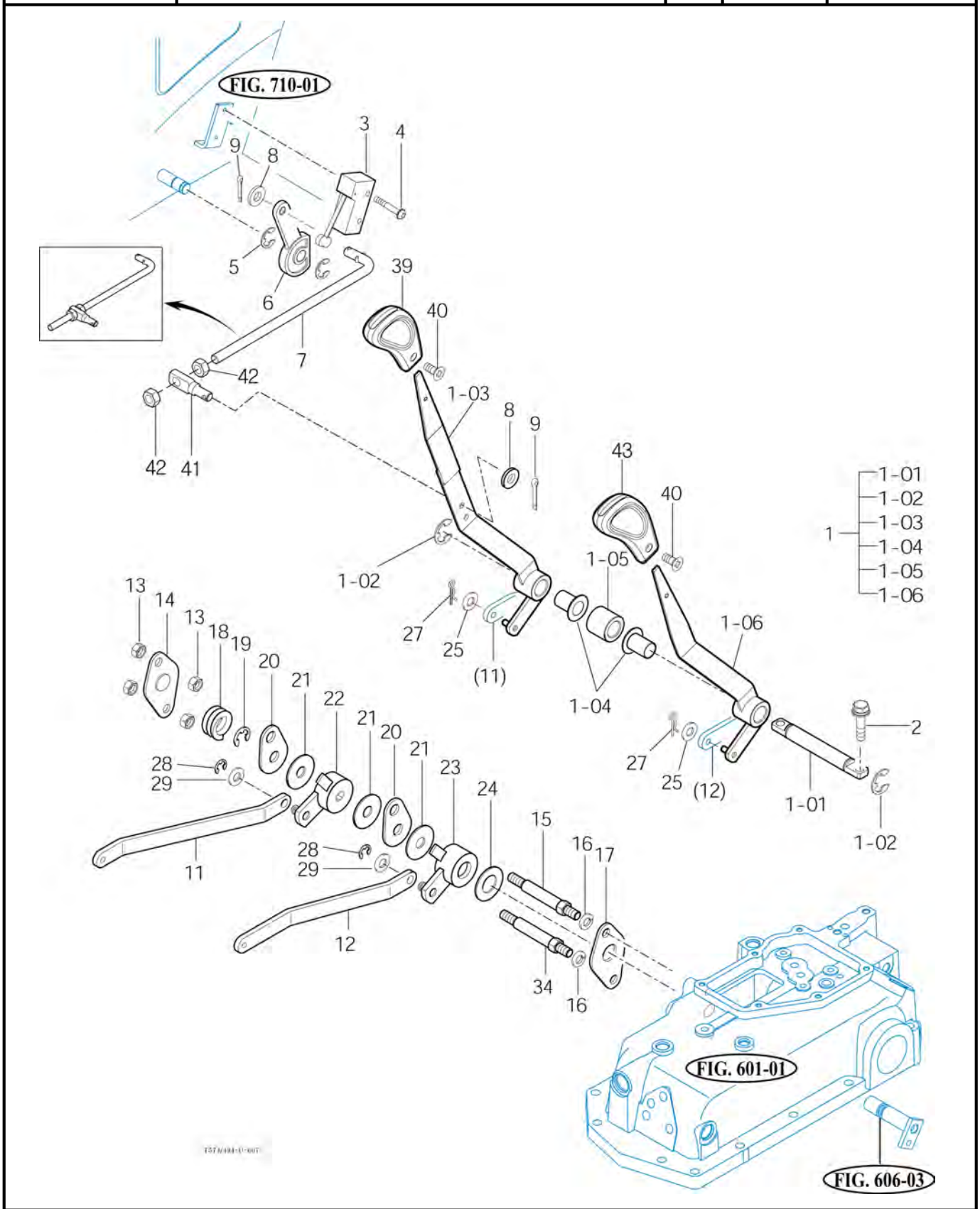

NOTE

https://truckmanualshub.com/

FIG 607

T574ST / T574NC / T494ST / T494NC

POSITION & DRAFT LEVER(2)

P2

YEAR

2018

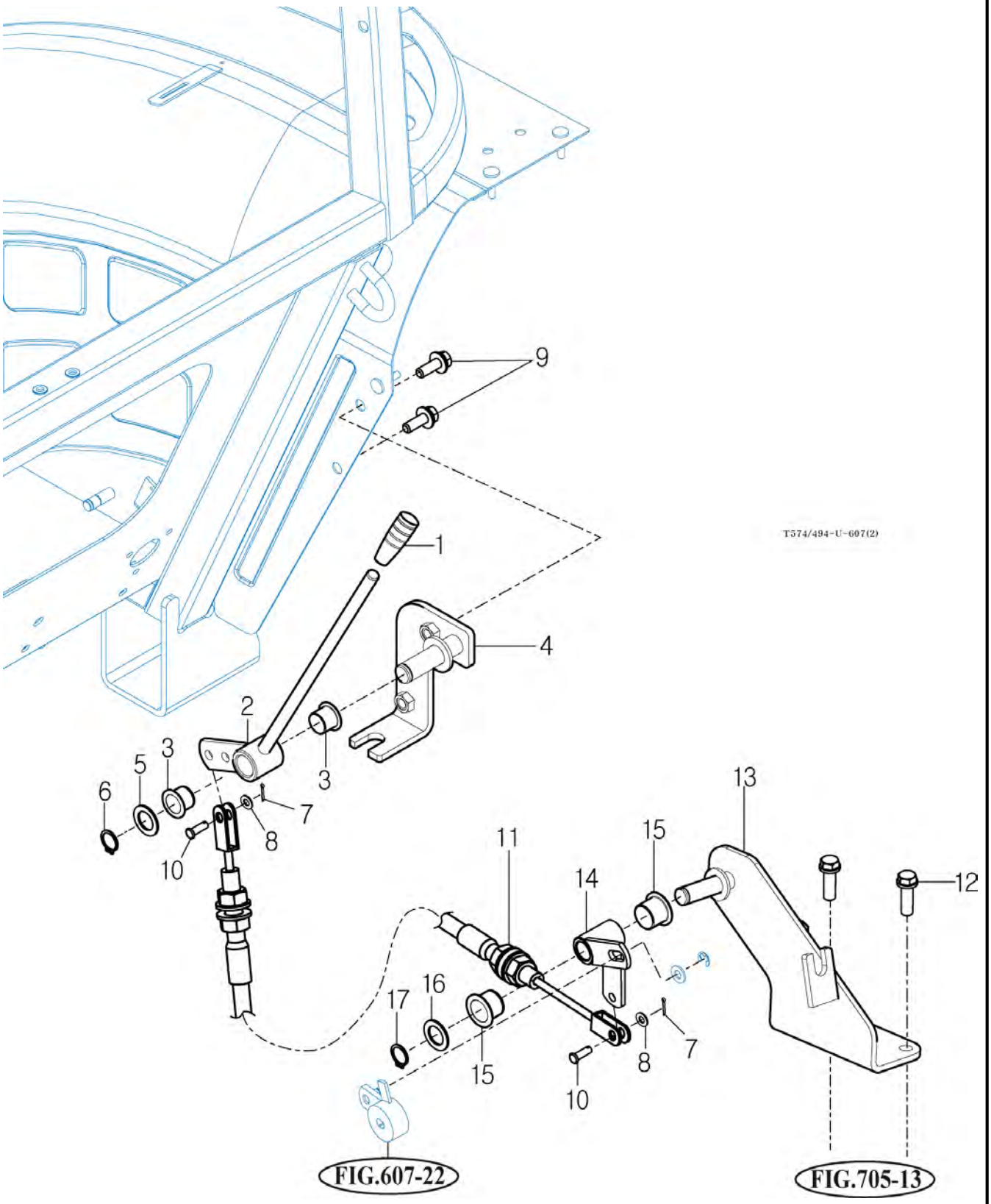

NOTE

https://truckmanualshub.com/

FIG 608

T574ST / T574NC / T494ST / T494NC

EXTERIOR HYD.VALVE

P1

YEAR

2018

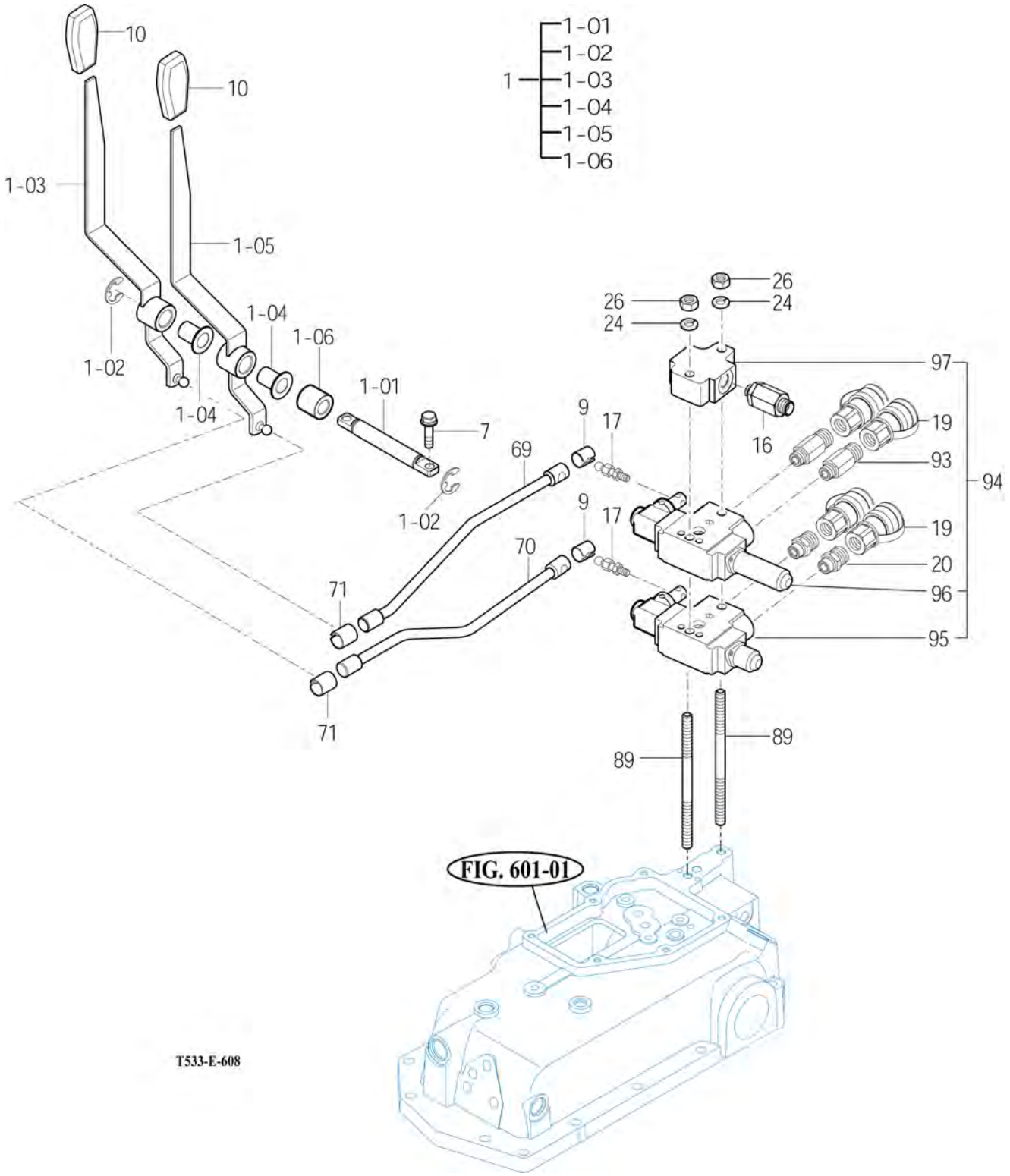

NOTE

https://truckmanualshub.com/

FIG 609

T574ST / T574NC / T494ST / T494NC

HYDRAULIC PIPE

P1

YEAR

2018

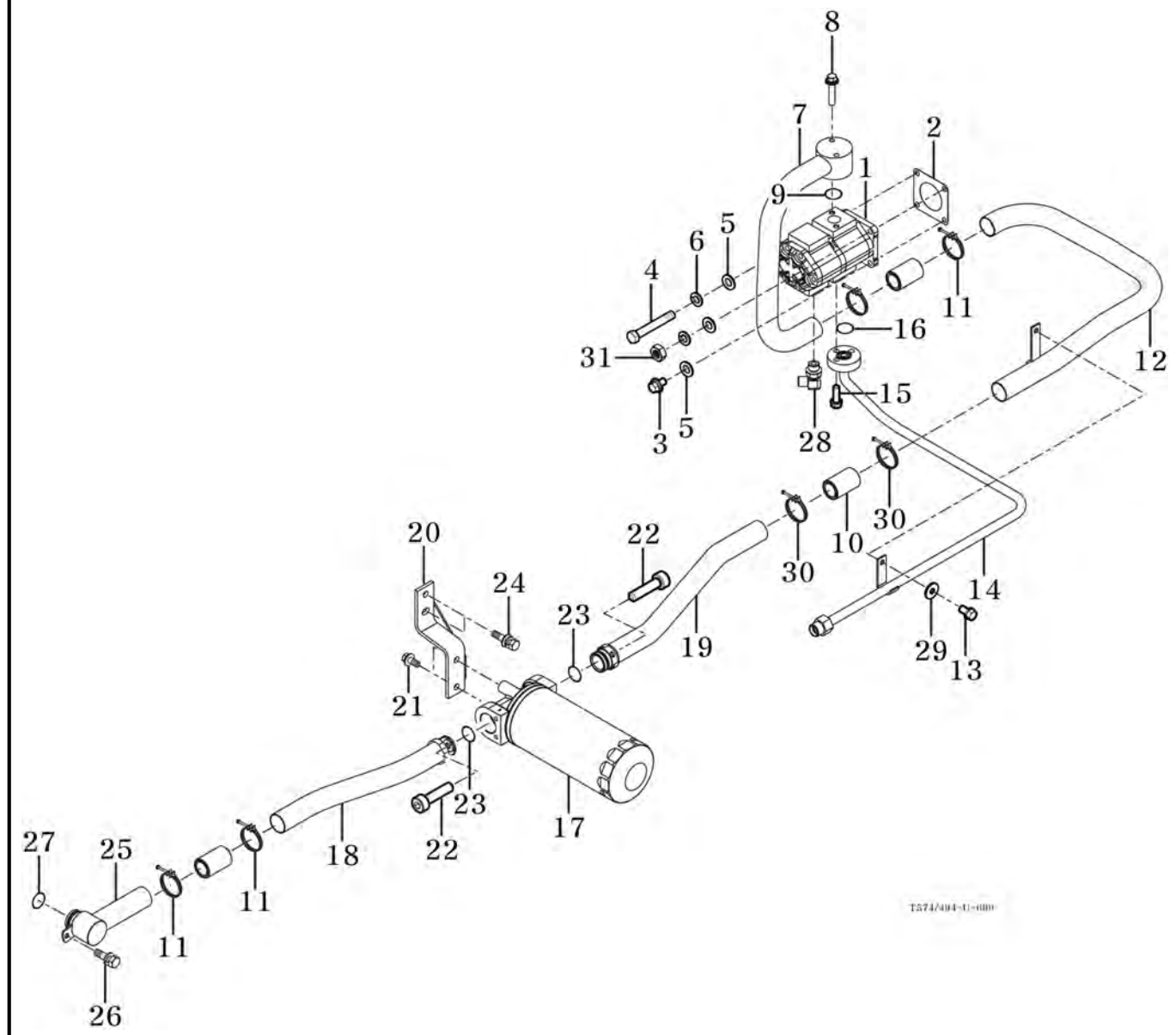

NOTE

https://truckmanualshub.com/

FIG 610

T574ST / T574NC / T494ST / T494NC

JOYSTICK

P1

YEAR

2018

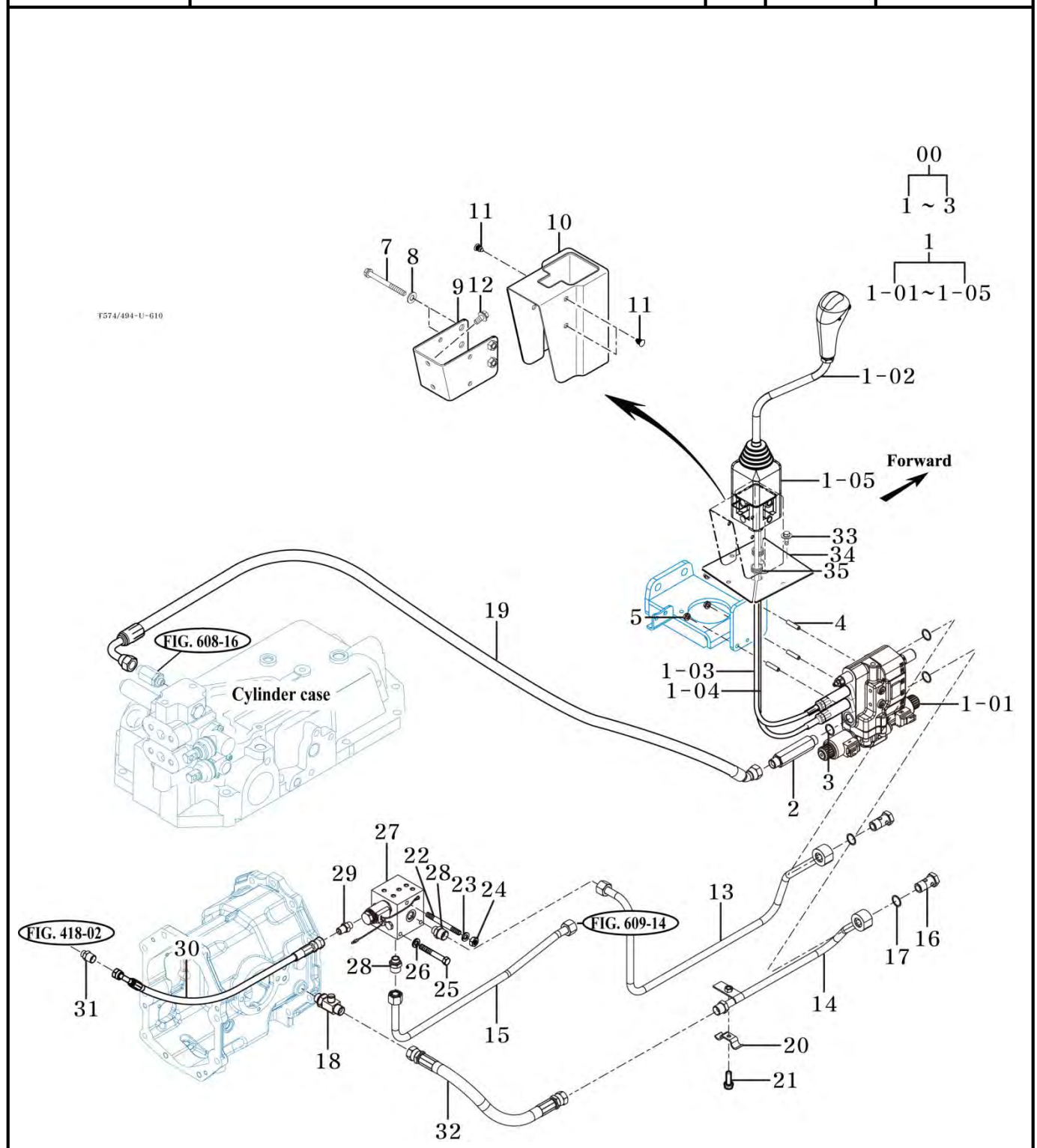

NOTE

https://truckmanualshub.com/

FIG 612

T574ST / T574NC / T494ST / T494NC

HITCH & 3-POINT LINK

P1

YEAR

2018

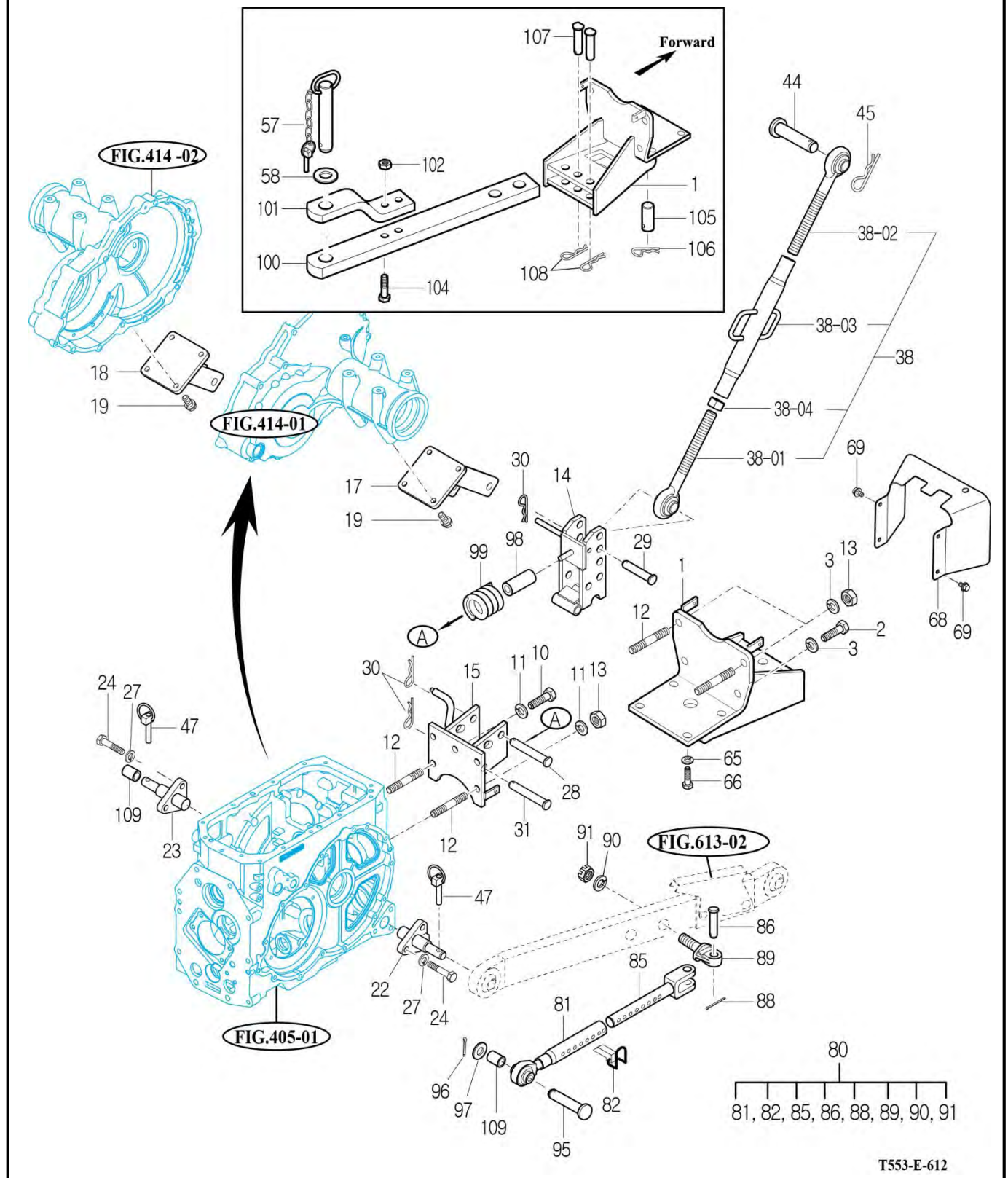

NOTE

FIG 612

T574ST / T574NC / T494ST / T494NC

HITCH & 3-POINT LINK

P2

YEAR

2018

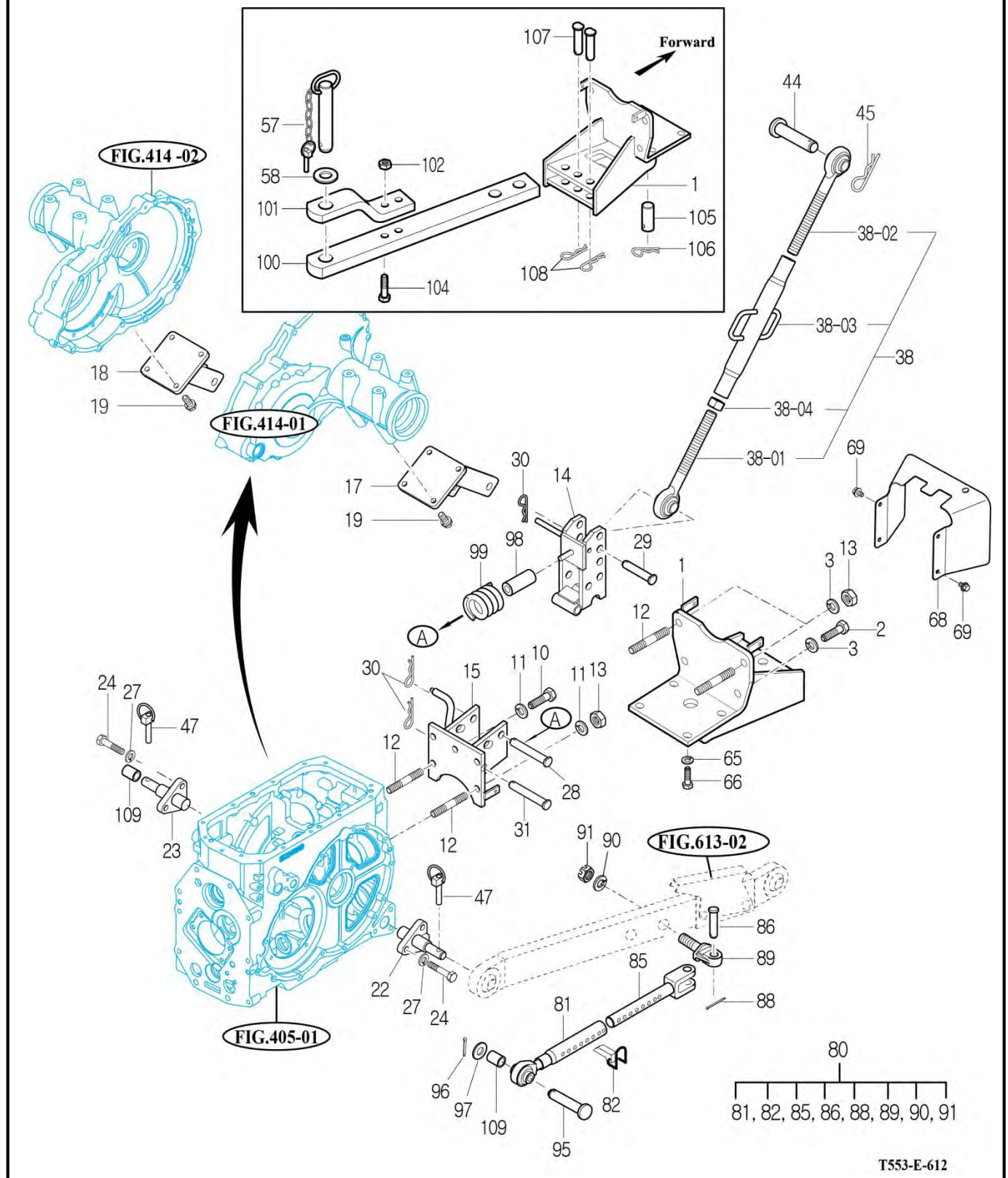

NOTE

https://truckmanualshub.com/

FIG 613

T574ST / T574NC / T494ST / T494NC

LOWER LINK & LIFT ROD

P1

YEAR

2018

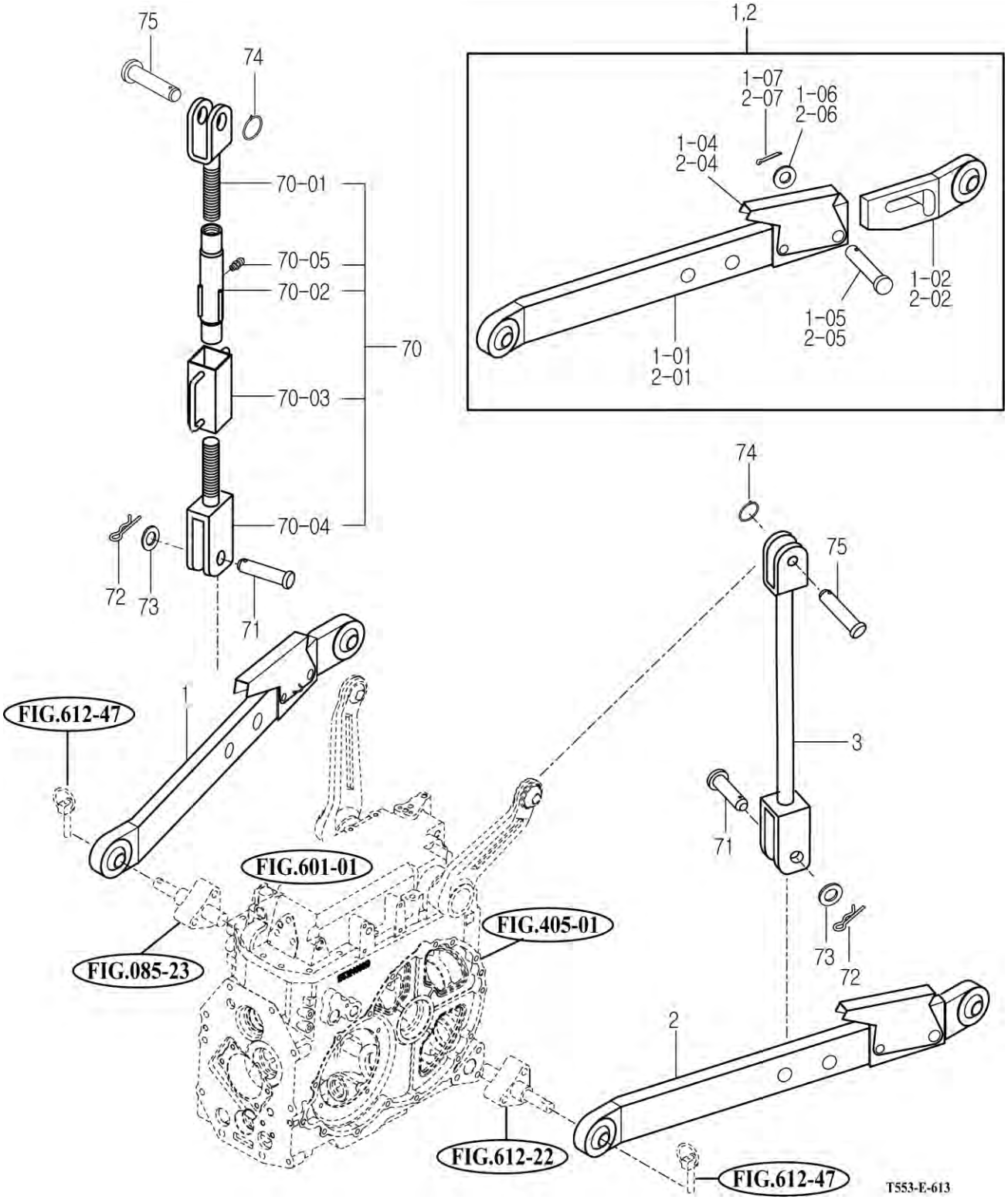

NOTE

https://truckmanualshub.com/

FIG 701 T574ST / T574NC / T494ST / T494NC	BONNET FRAME	P1	YEAR 2018	

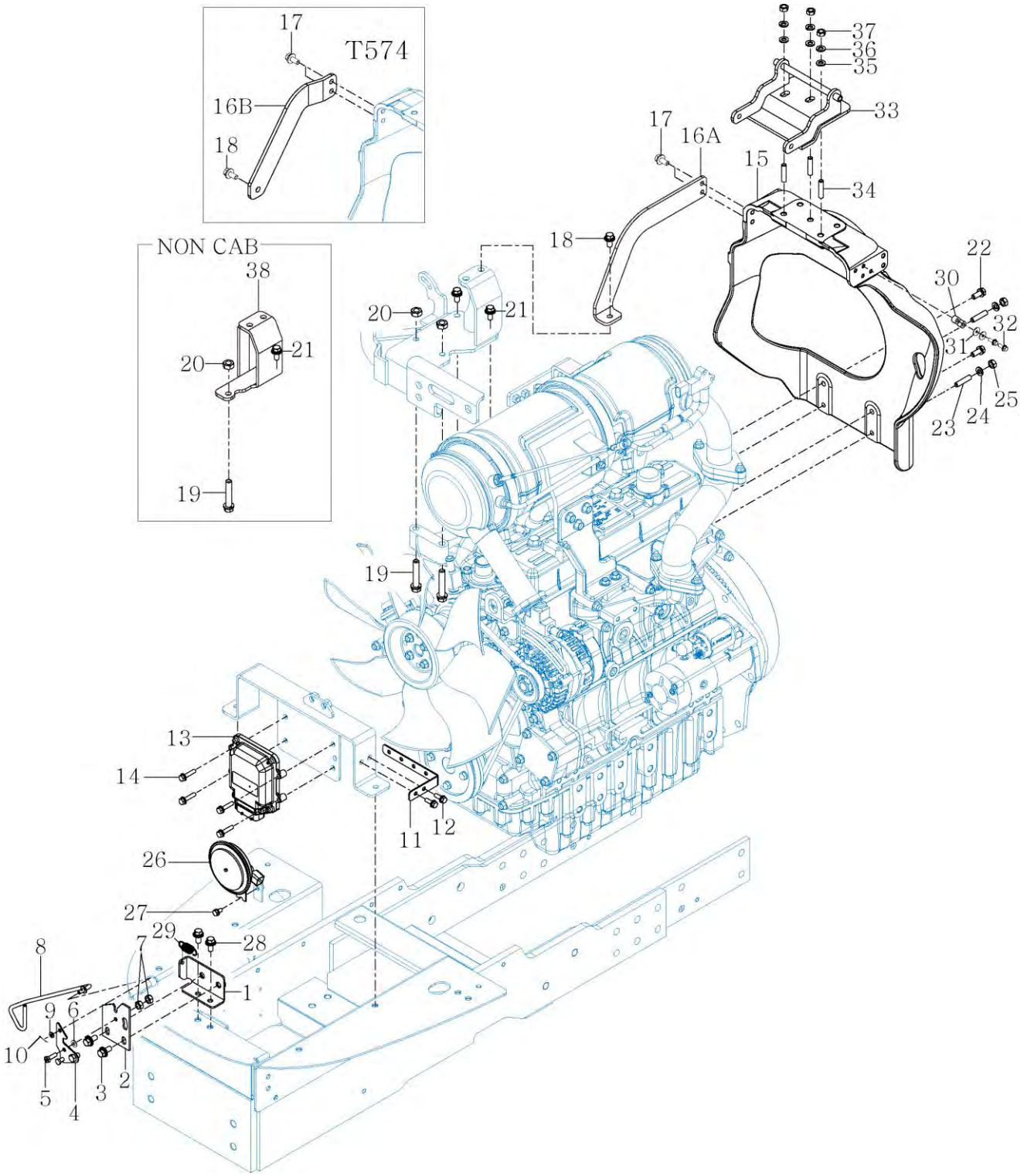

NOTE

https://truckmanualshub.com/

FIG 702 T574ST / T574NC / T494ST / T494NC	BONNET (1)	P1	YEAR 2018	

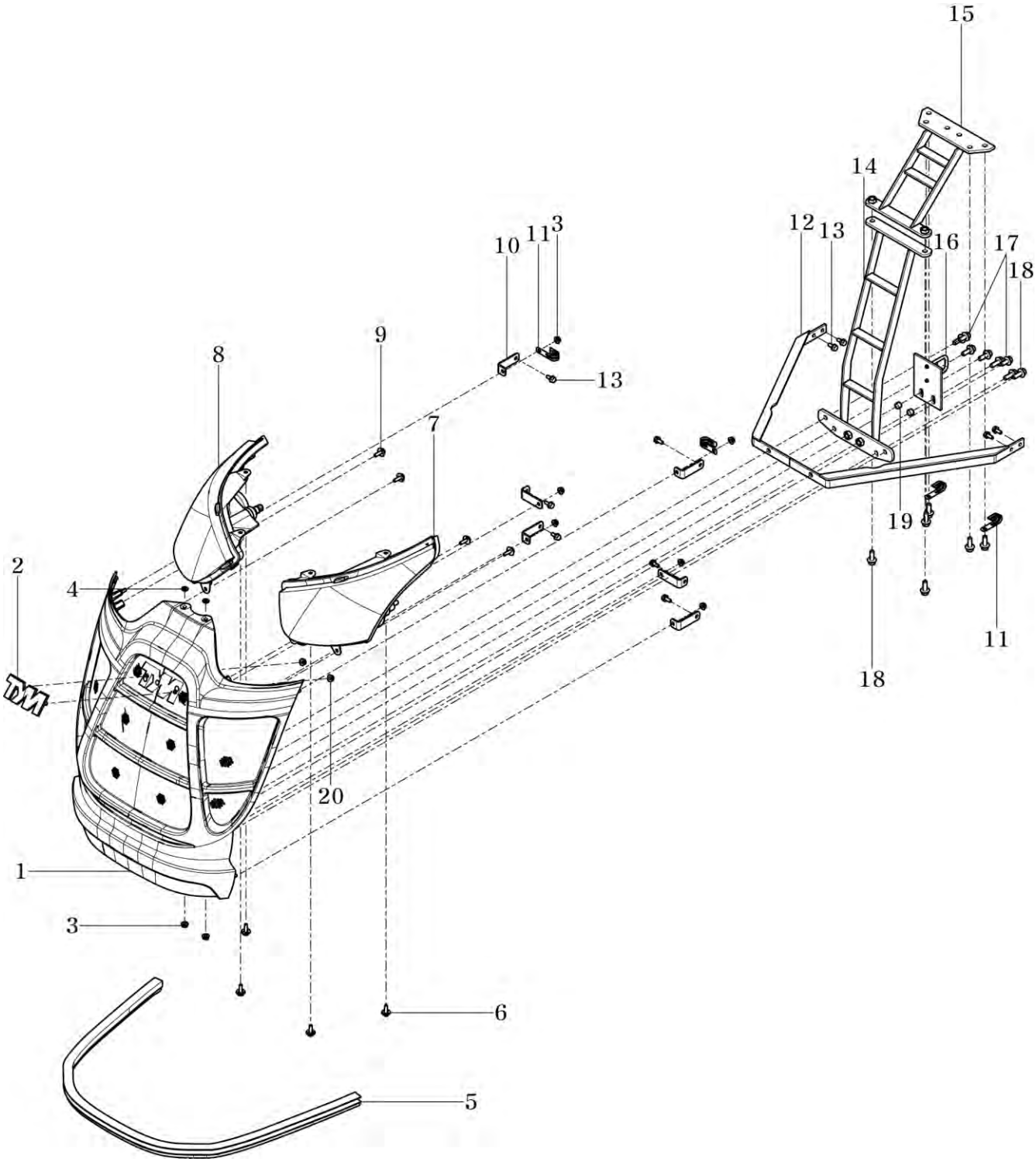

NOTE	

https://truckmanualshub.com/

FIG 702 T574ST / T574NC / T494ST / T494NC	BONNET (2)	P2	YEAR 2018	

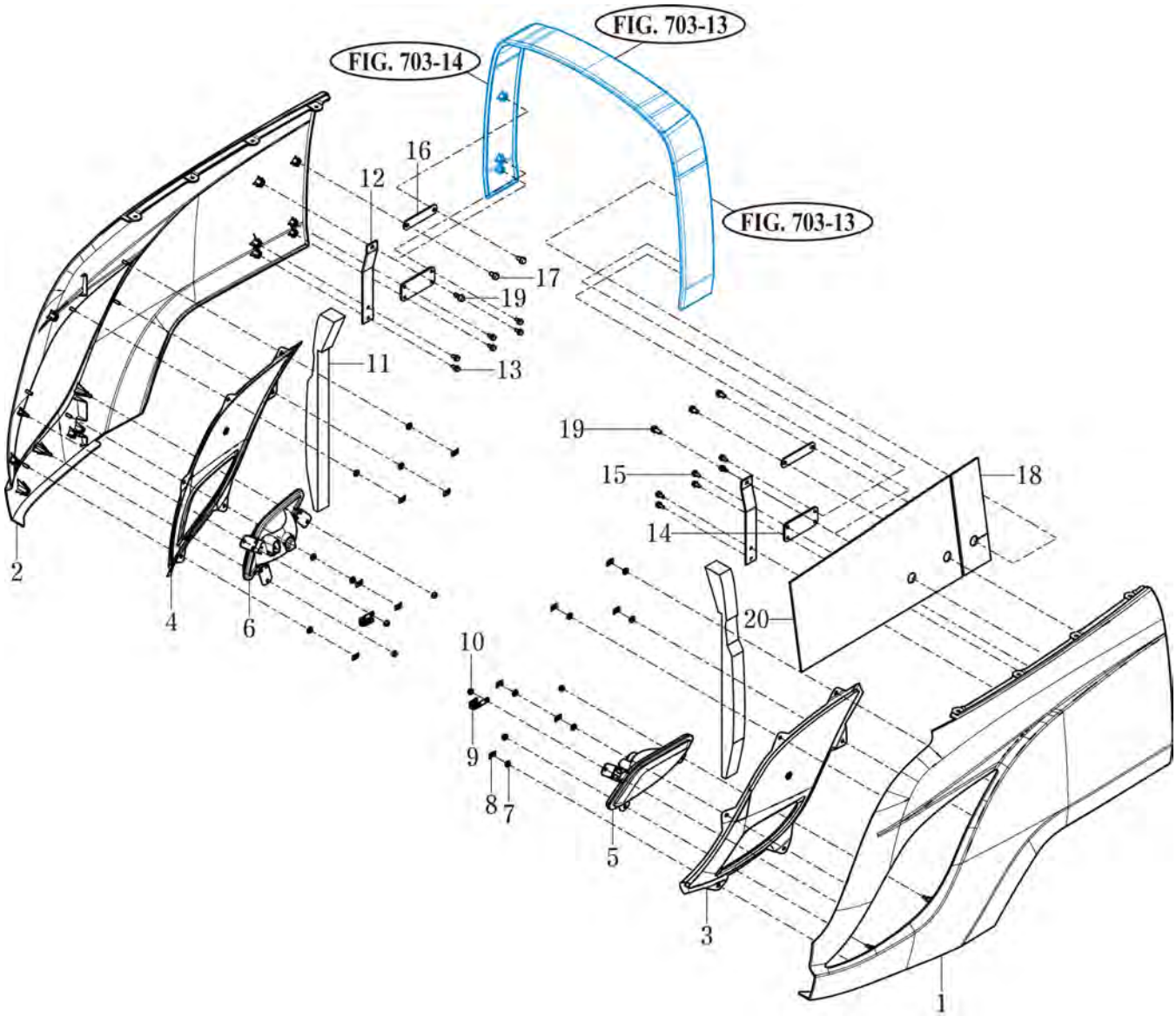

NOTE	

https://truckmanualshub.com/

FIG 703 T574ST / T574NC / T494ST / T494NC	EXTENSION COVER	P1	YEAR 2018	

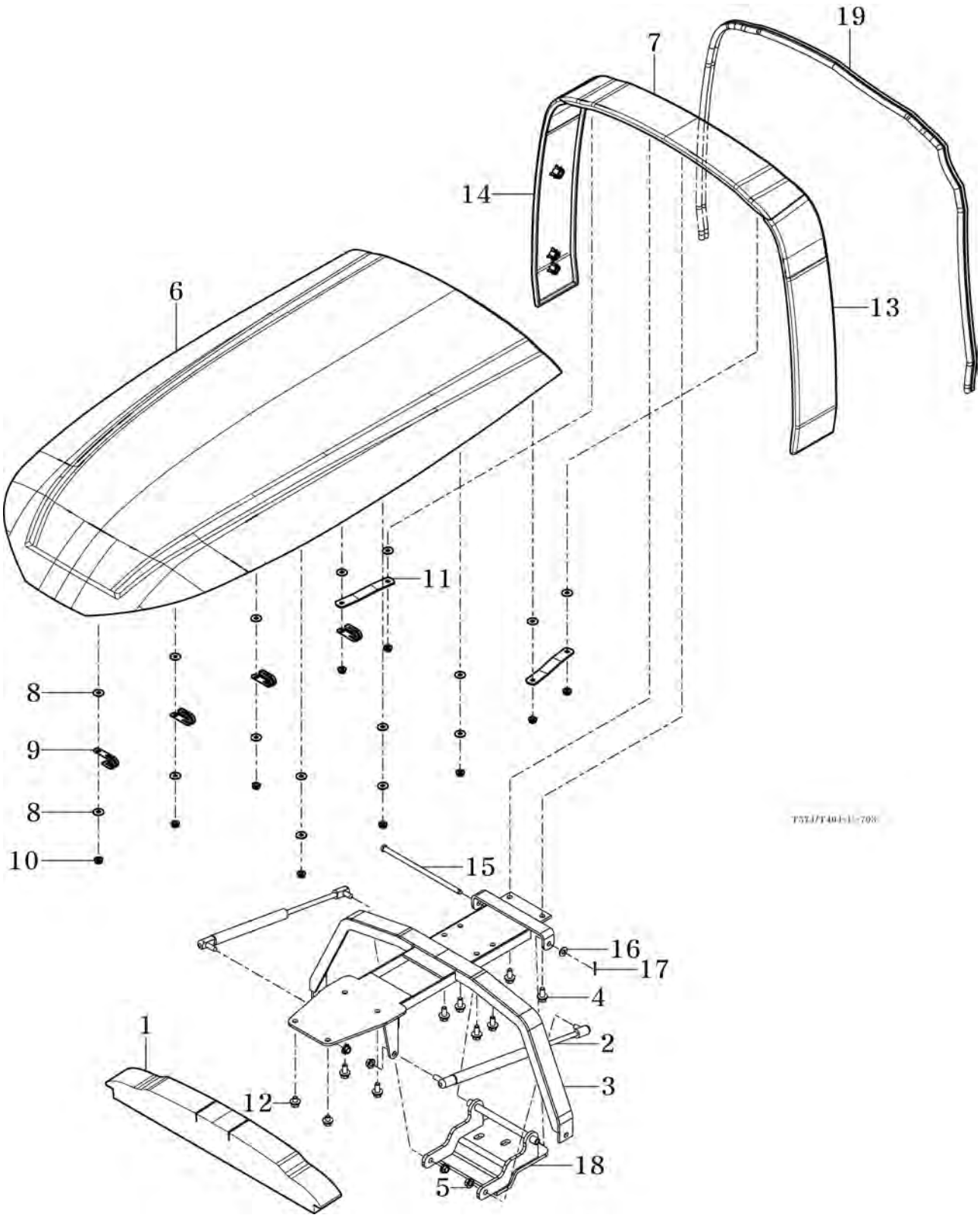

NOTE	

https://truckmanualshub.com/

FIG 704A T574ST / T574NC / T494ST / T494NC	LEVER COVER & STEP	P1	YEAR 2018

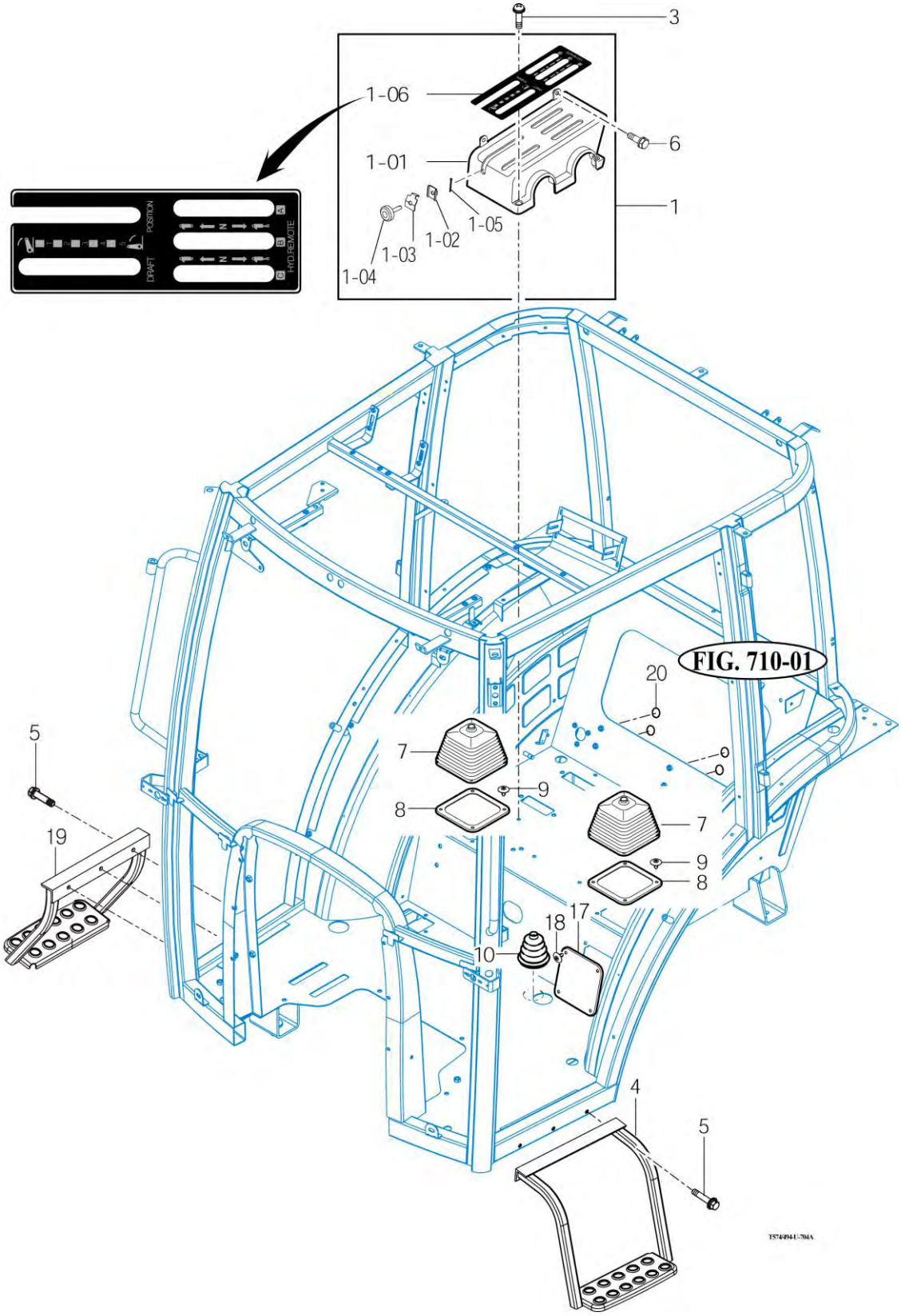

NOTE

https://truckmanualshub.com/

FIG 704B T574ST / T574NC / T494ST / T494NC	LEVER COVER & STEP-Non CAB	P1	YEAR 2018	

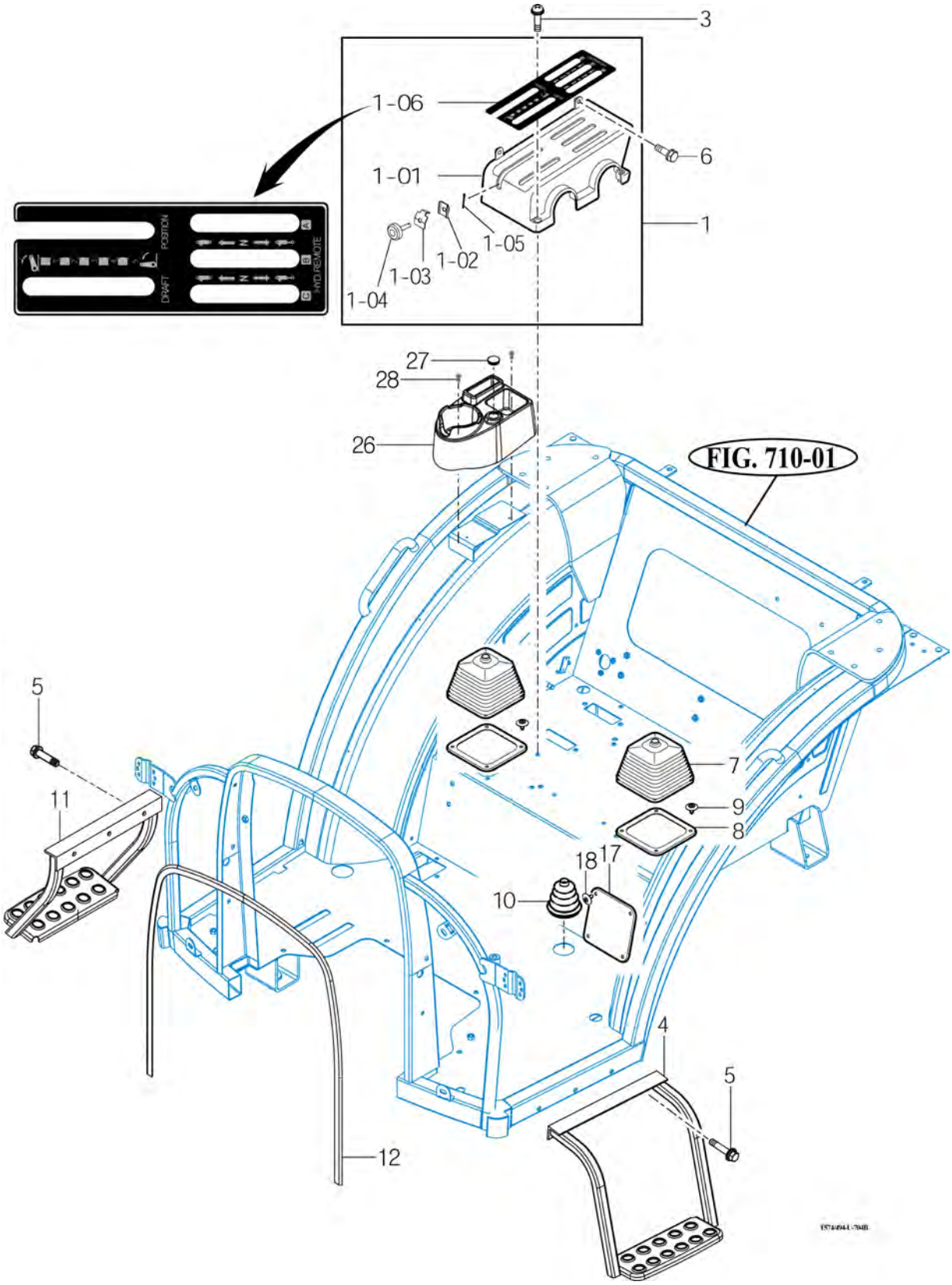

NOTE

https://truckmanualshub.com/

FIG 705 T574ST / T574NC / T494ST / T494NC	FRONT & REAR MOUNTING	P1	YEAR 2018	

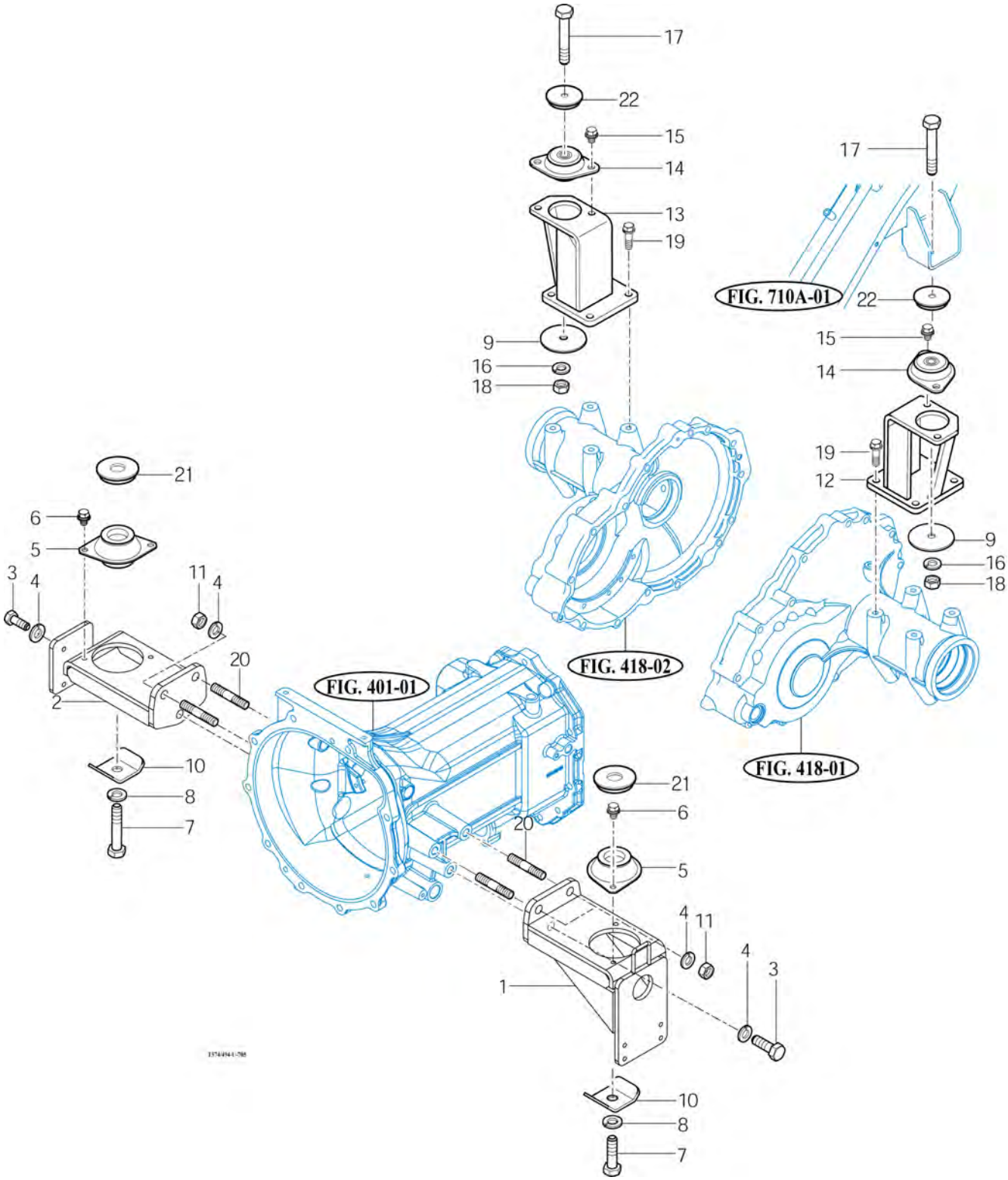

NOTE

https://truckmanualshub.com/

FIG 706 T574ST / T574NC / T494ST / T494NC	SEAT & MAT	P1	YEAR 2018	

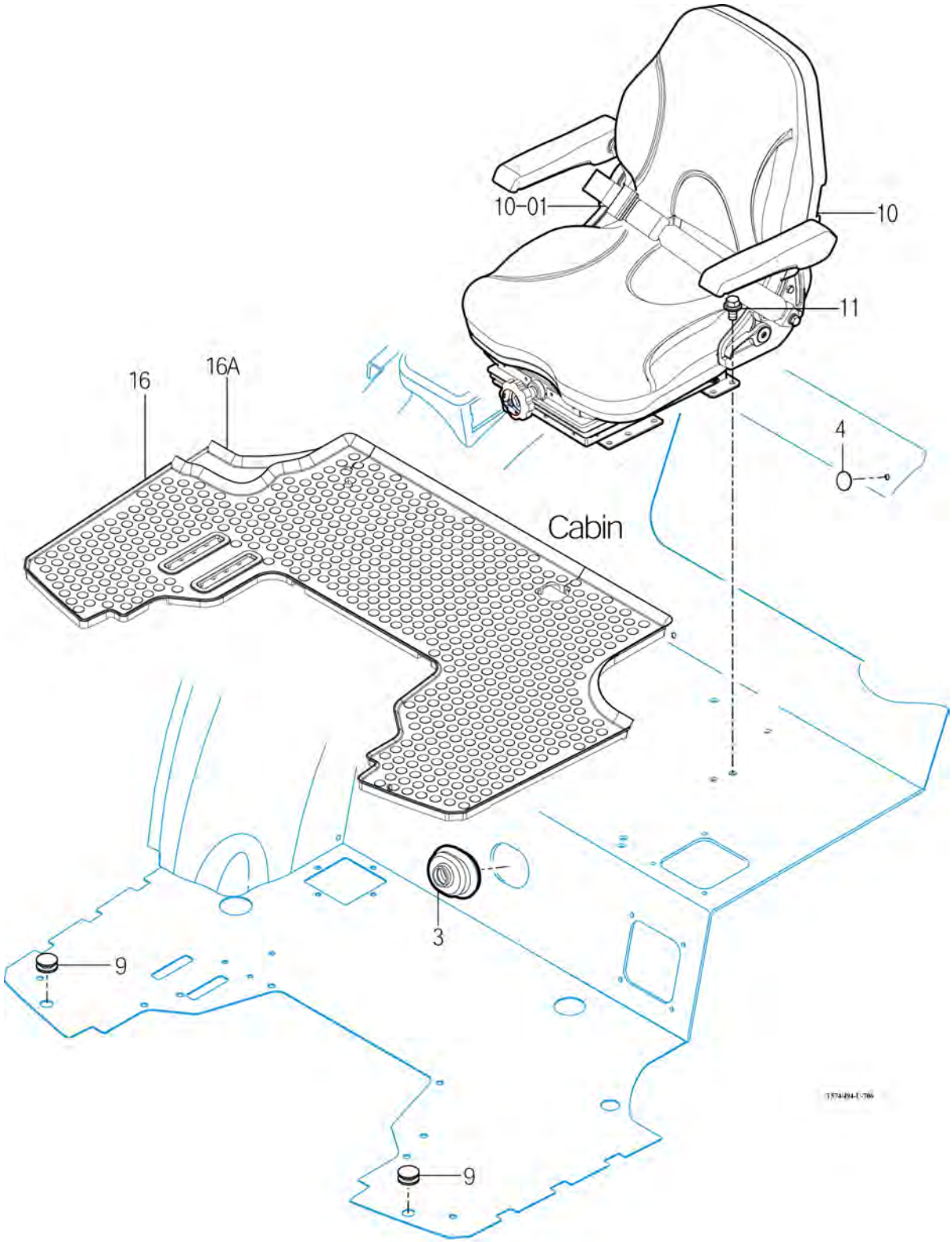

NOTE	

https://truckmanualshub.com/

FIG 709 T574ST / T574NC / T494ST / T494NC	DOOR	P1	YEAR 2018	

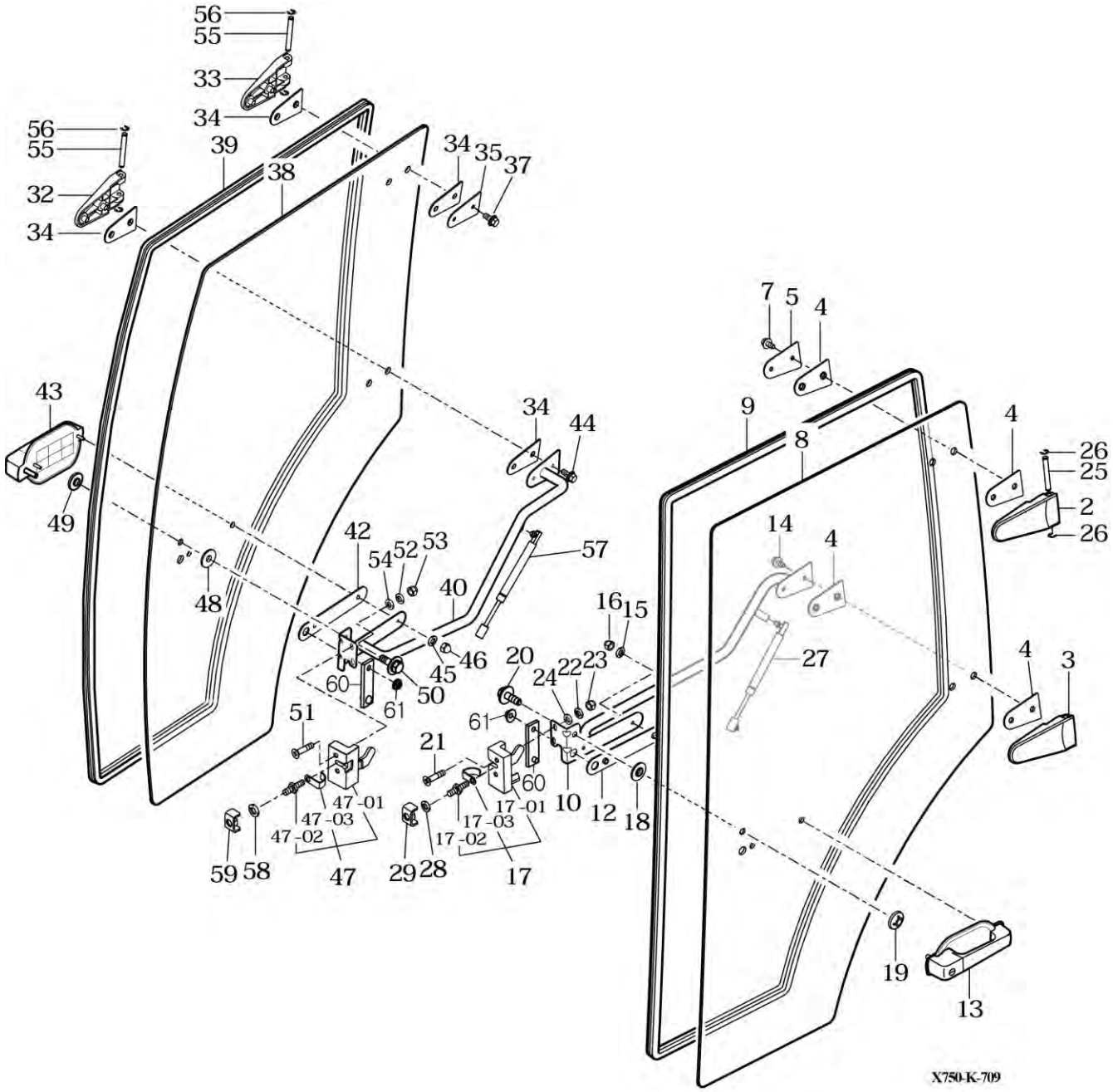

NOTE	

https://truckmanualshub.com/

FIG 709 T574ST / T574NC / T494ST / T494NC	DOOR	P2	YEAR 2018	

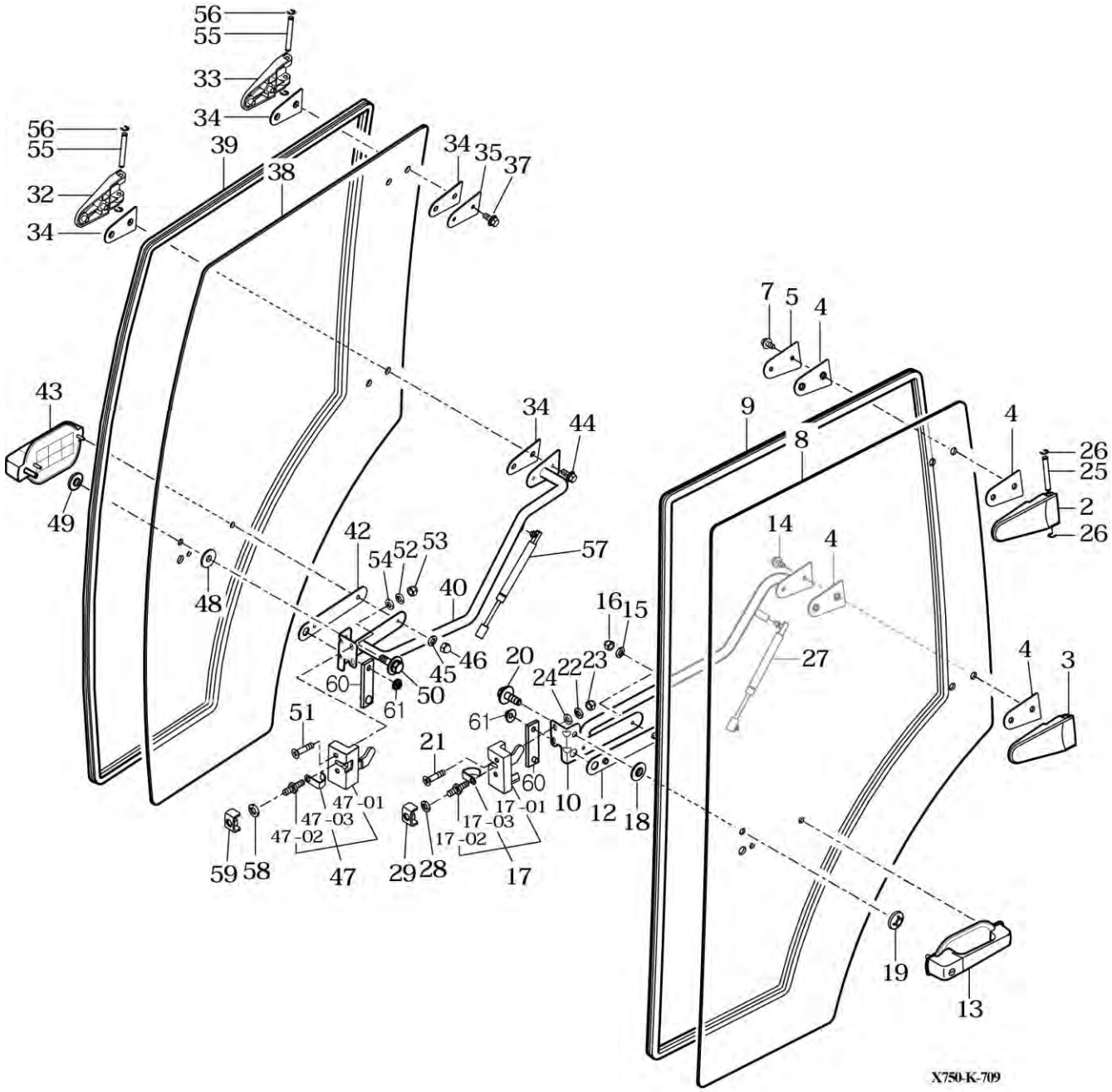

NOTE	

https://truckmanualshub.com/

FIG 710A T574ST / T574NC / T494ST / T494NC	FRONT GLASS	P1	YEAR 2018	

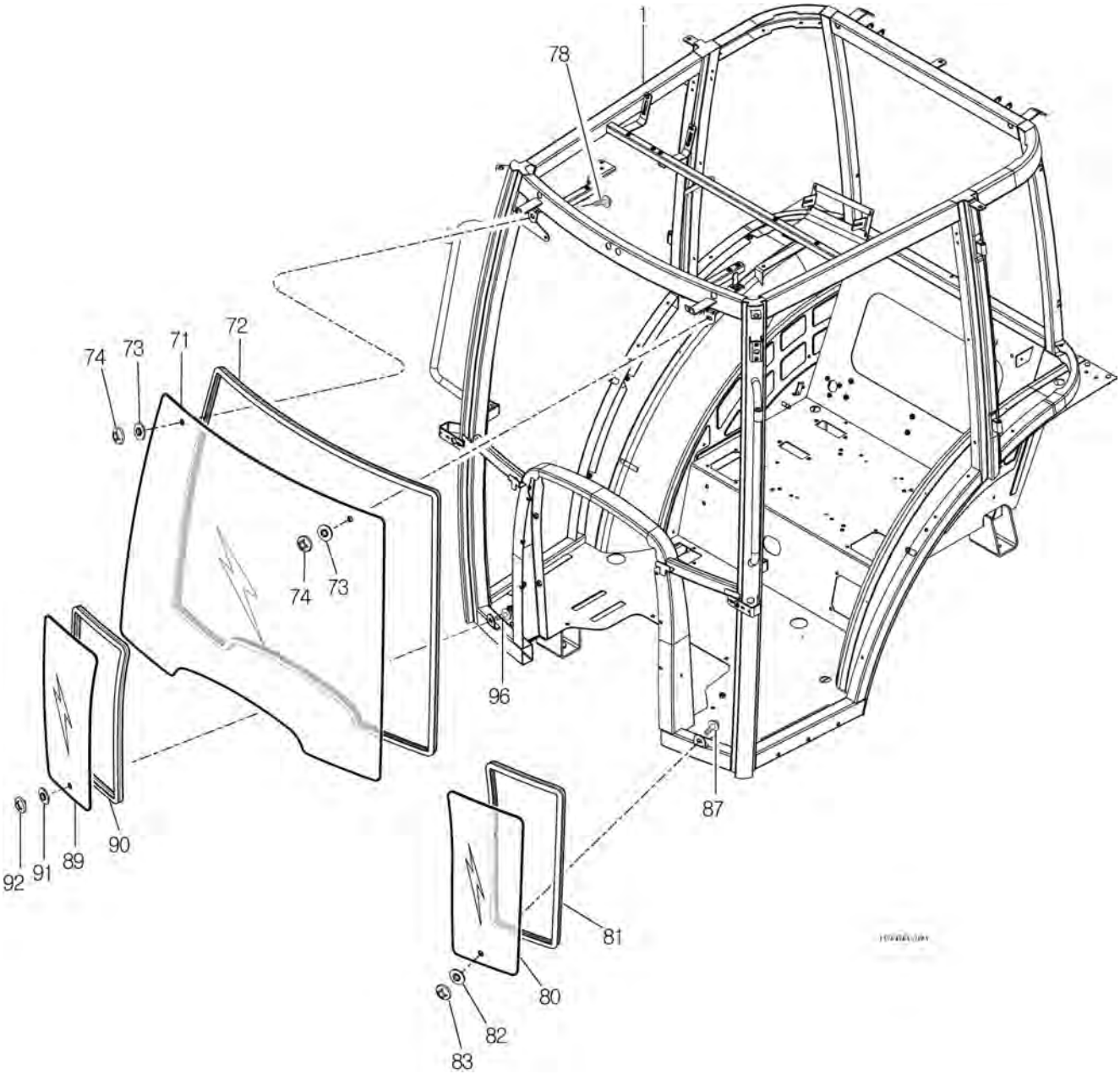

NOTE	

https://truckmanualshub.com/

FIG 710B T574ST / T574NC / T494ST / T494NC	FRAME&2POLES ROPS-Non CAB	P1	YEAR 2018	

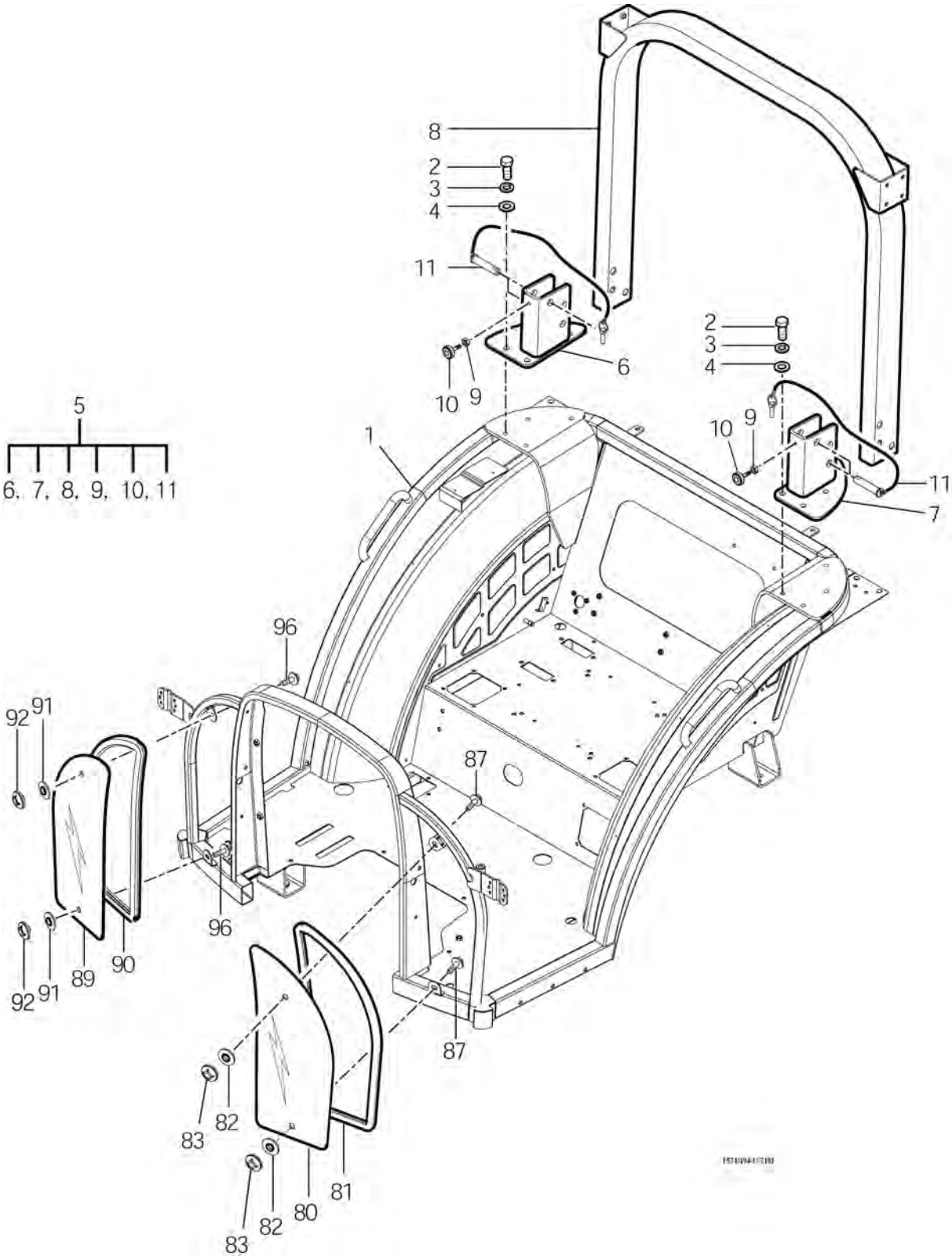

NOTE	

https://truckmanualshub.com/

FIG 711 T574ST / T574NC / T494ST / T494NC	SIDE GLASS	P1	YEAR 2018	

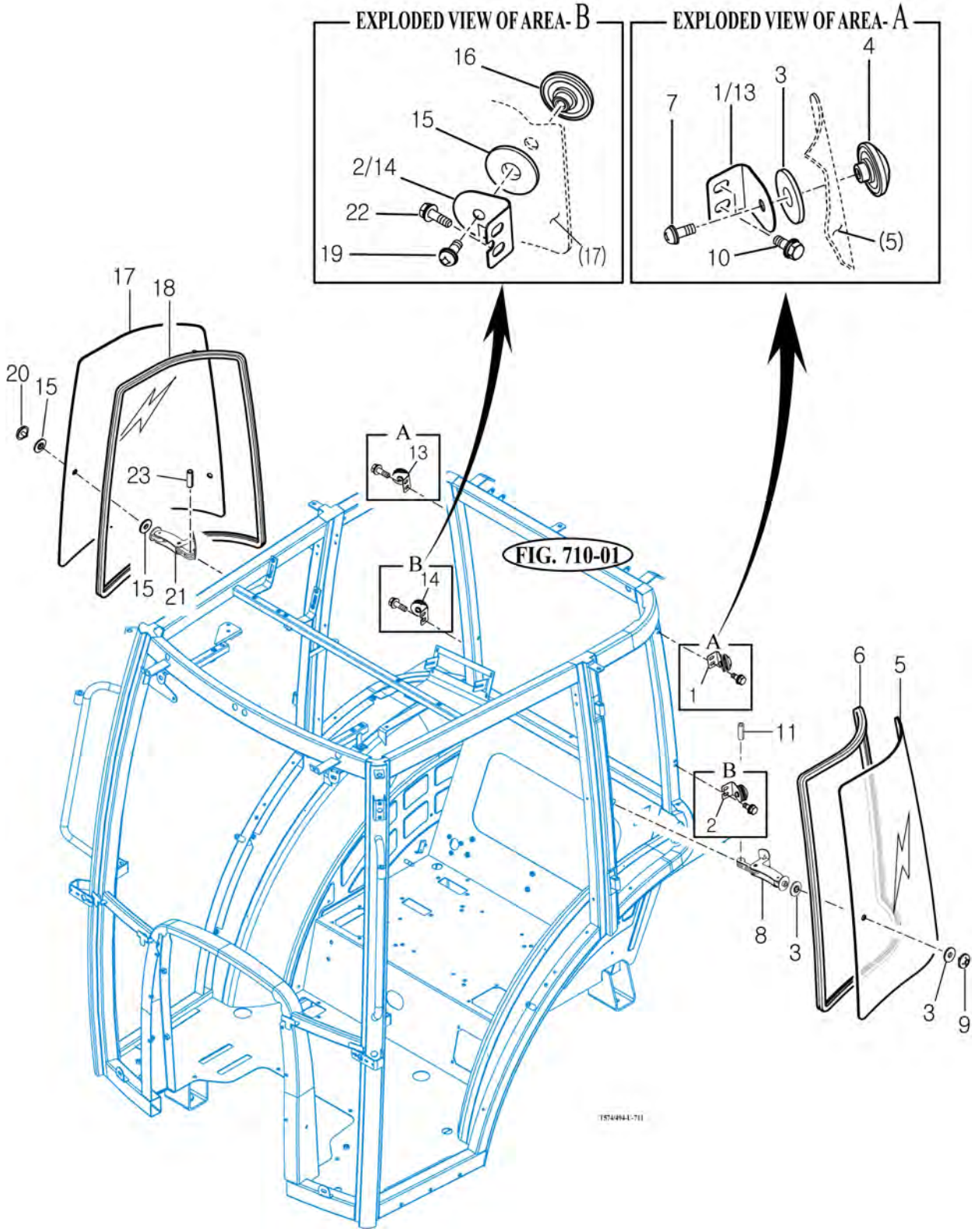

NOTE

https://truckmanualshub.com/

FIG 712 T574ST / T574NC / T494ST / T494NC	REAR GLASS	P1	YEAR 2018	

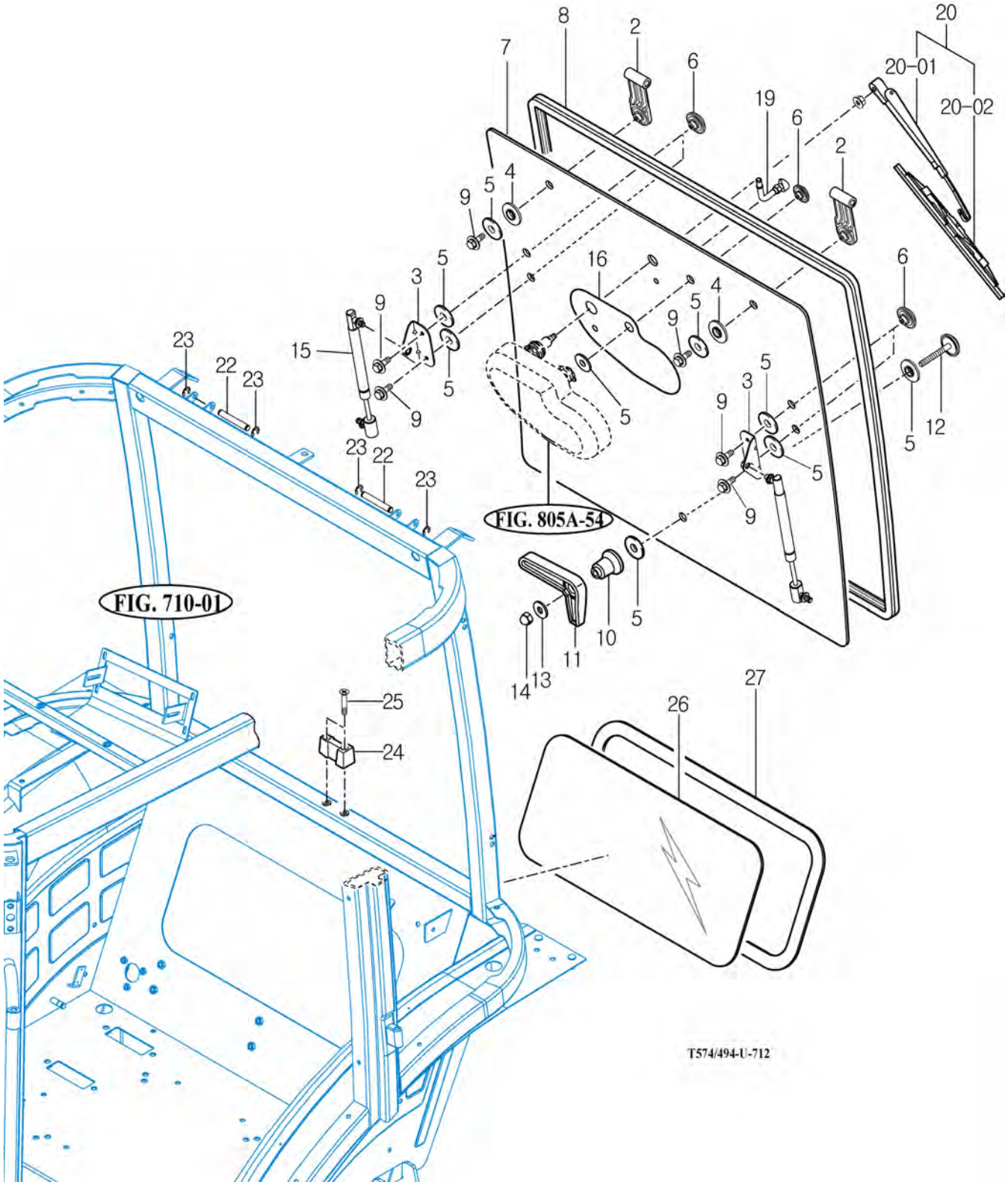

NOTE

https://truckmanualshub.com/

FIG 713A T574ST / T574NC / T494ST / T494NC	SUB FENDER & COVER	P1	YEAR 2018

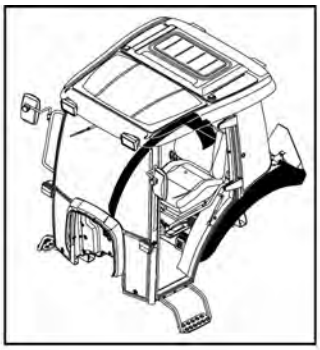

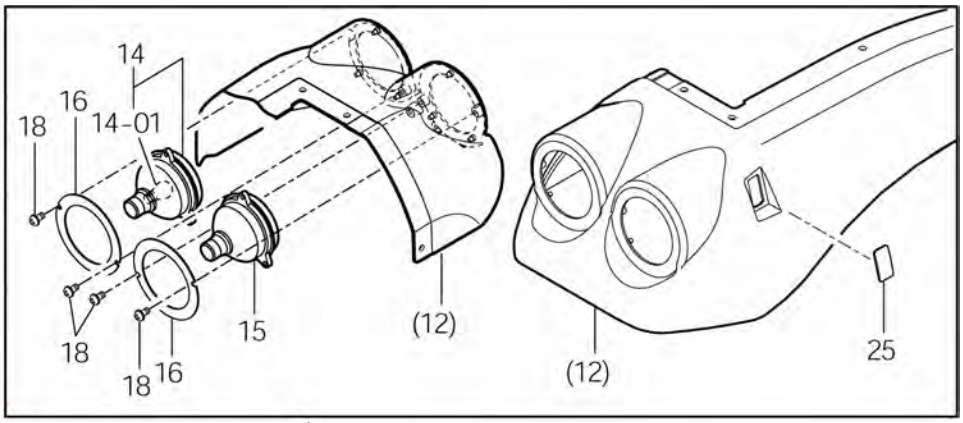

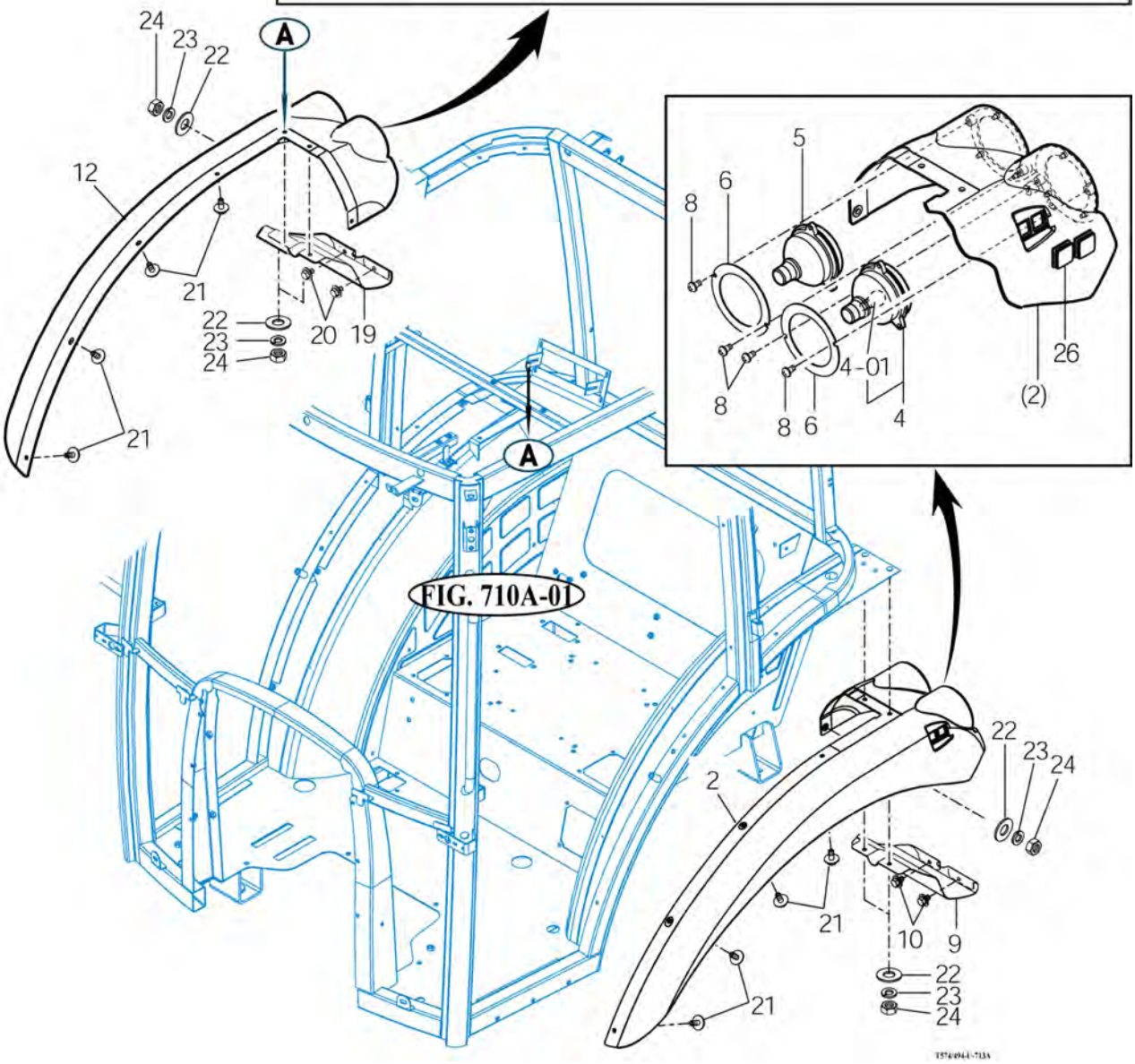

NOTE	

https://truckmanualshub.com/

FIG 713B T574ST / T574NC / T494ST / T494NC	SUB FENDER&COVER-Non CAB	P1	YEAR 2018	

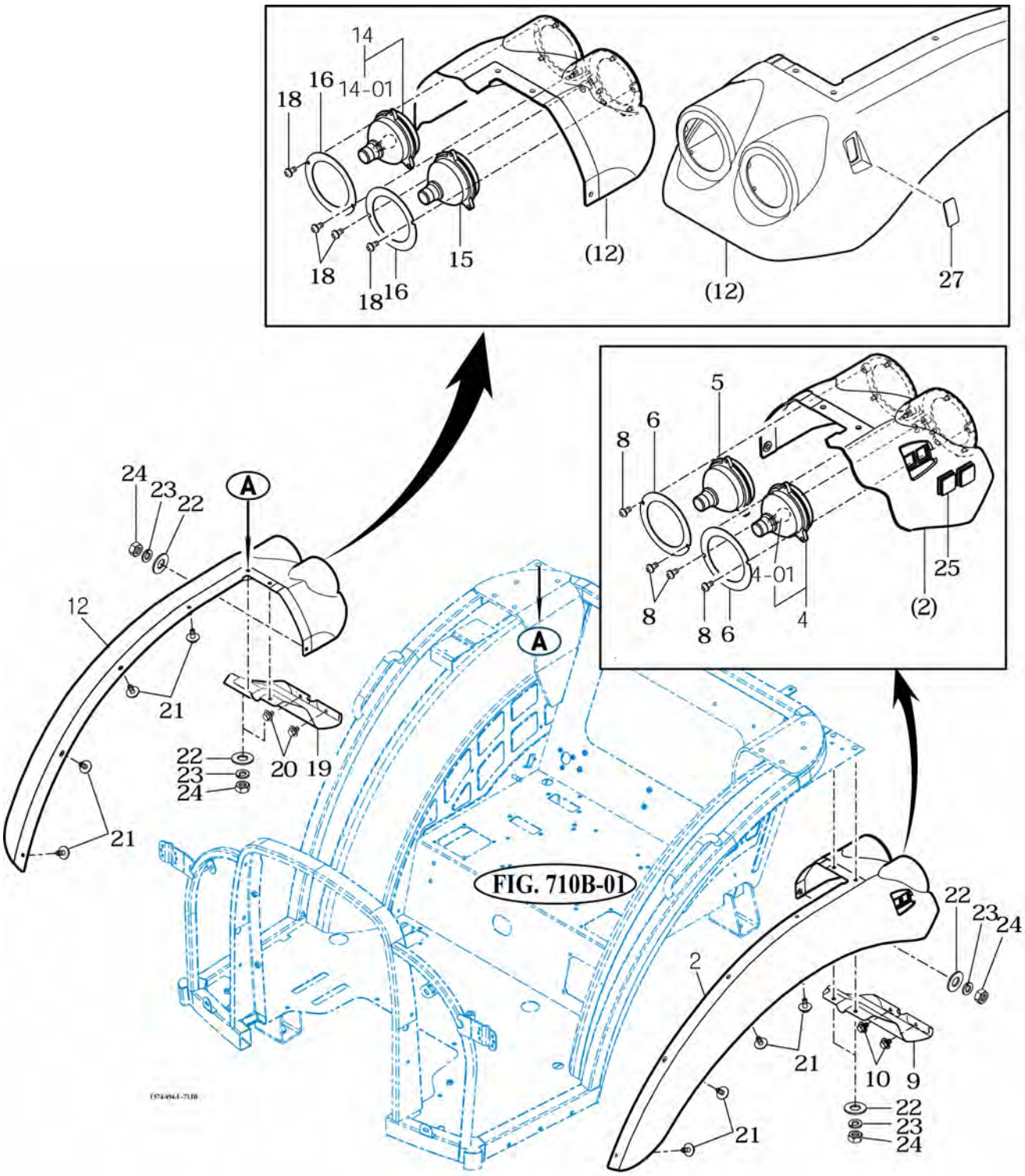

NOTE

https://truckmanualshub.com/

FIG 714A T574ST / T574NC / T494ST / T494NC	MIRROR	P1	YEAR 2018	

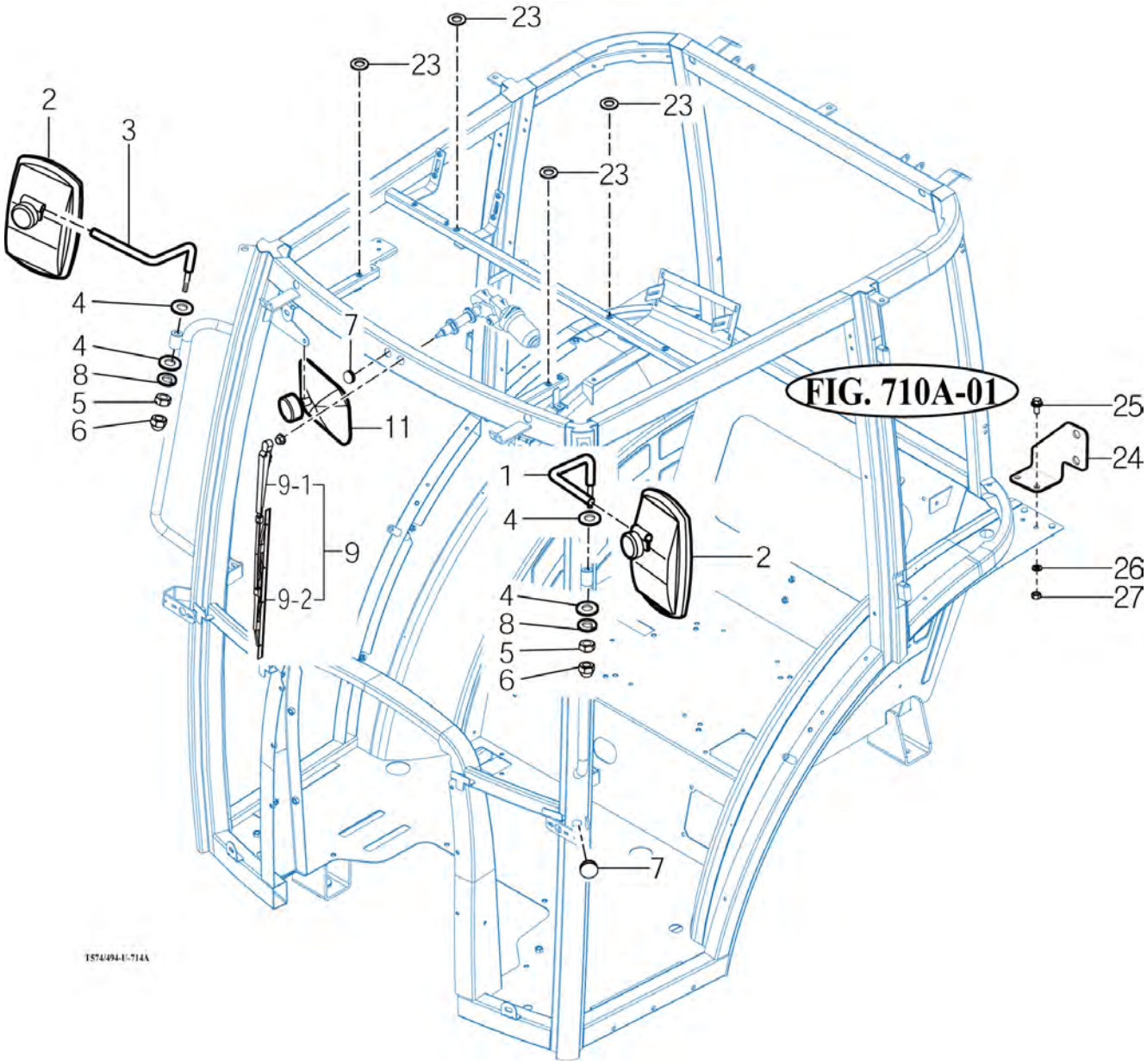

NOTE

https://truckmanualshub.com/

FIG 714B T574ST / T574NC / T494ST / T494NC	MIRROR&WORKING LAMP-Non CAB	P1	YEAR 2018	

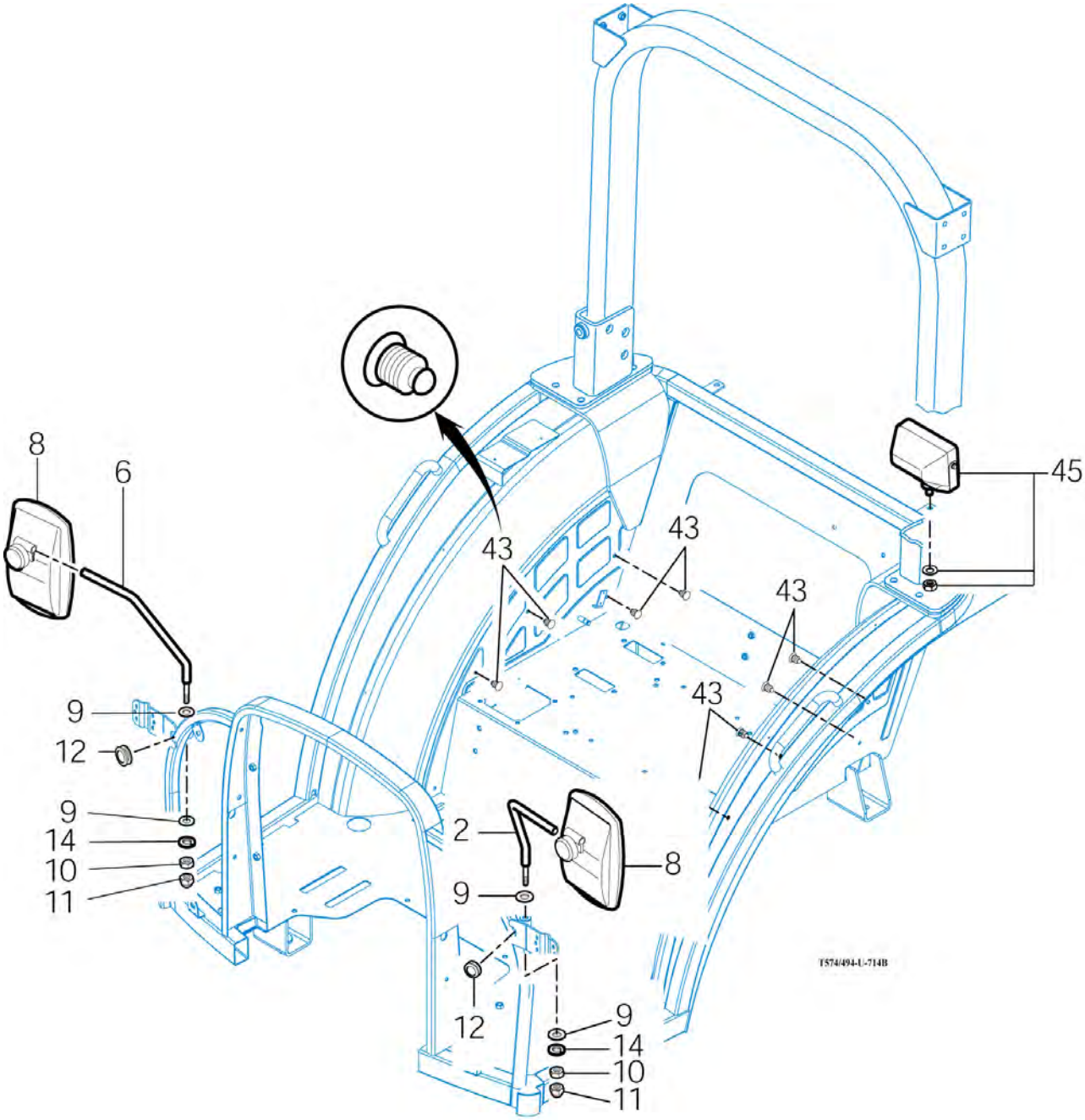

NOTE

https://truckmanualshub.com/

FIG 715A T574ST / T574NC / T494ST / T494NC	HEATER & AIR-CON	P1	YEAR 2018

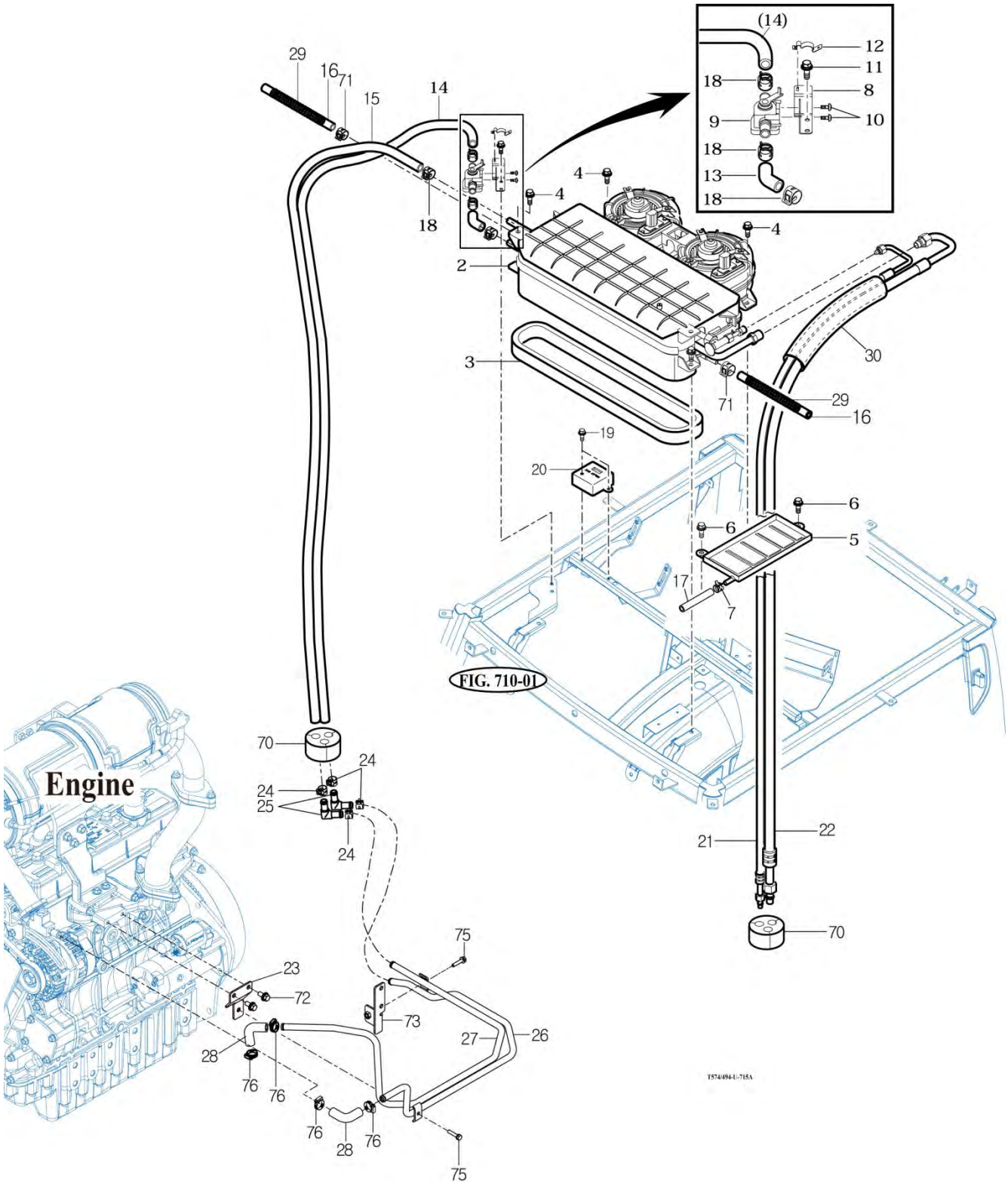

NOTE

https://truckmanualshub.com/

FIG 715B T574ST / T574NC / T494ST / T494NC	HEATER & AIR-CON	P1	YEAR 2018	

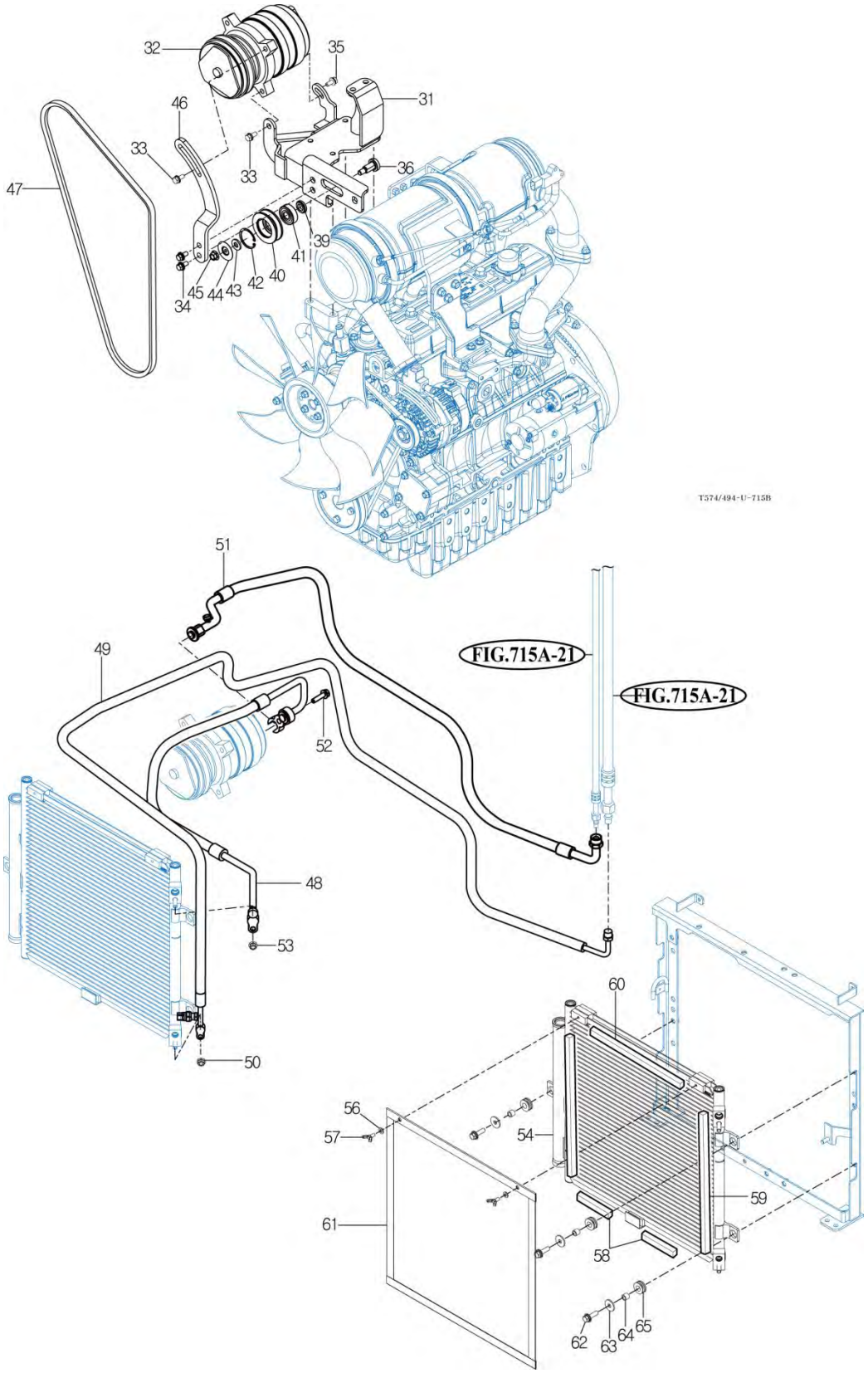

NOTE

https://truckmanualshub.com/

FIG 716 T574ST / T574NC / T494ST / T494NC	FENDER COVER	P1	YEAR 2018	

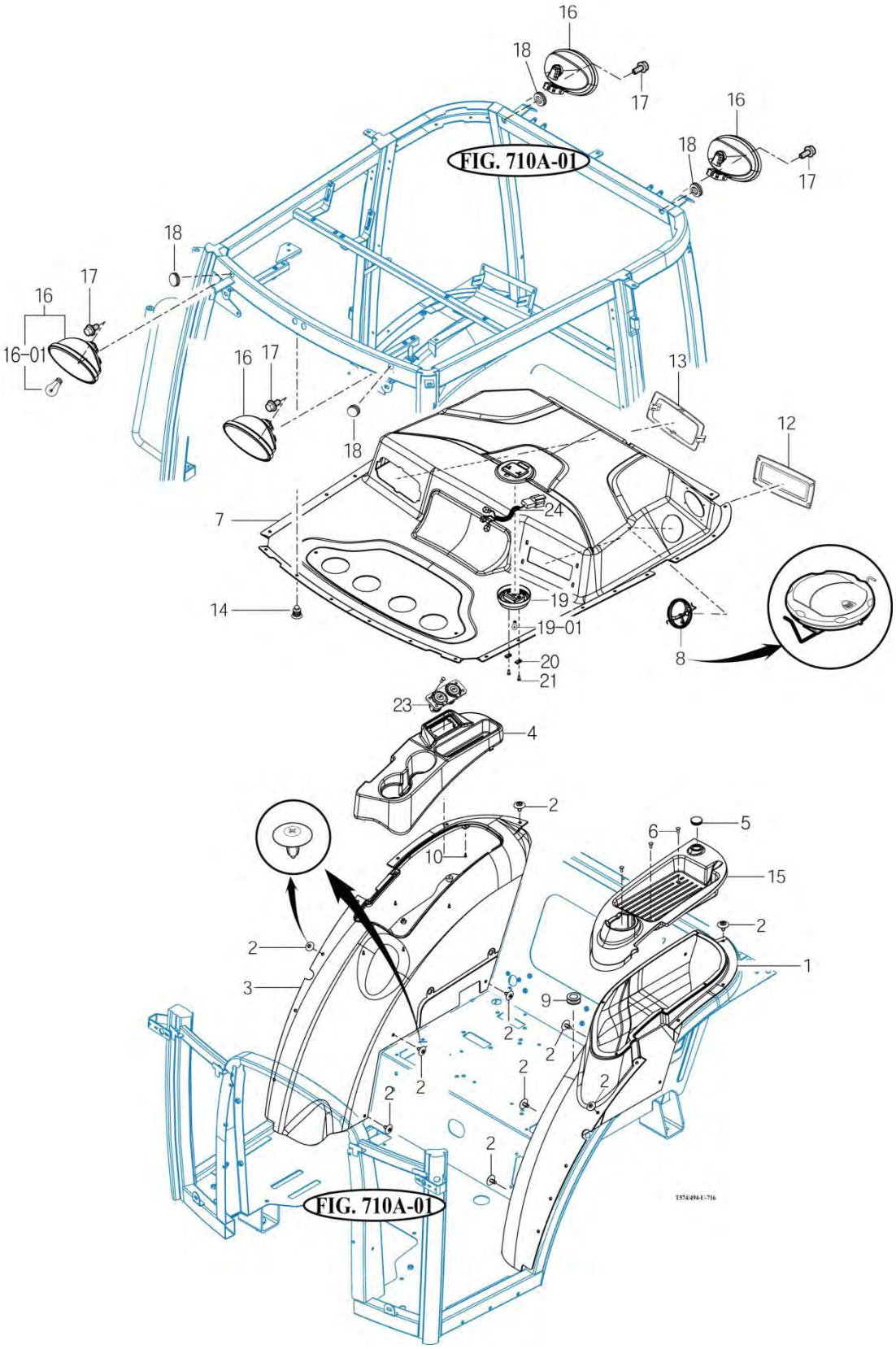

NOTE

https://truckmanualshub.com/

FIG 717 T574ST / T574NC / T494ST / T494NC	ROOF	P1	YEAR 2018

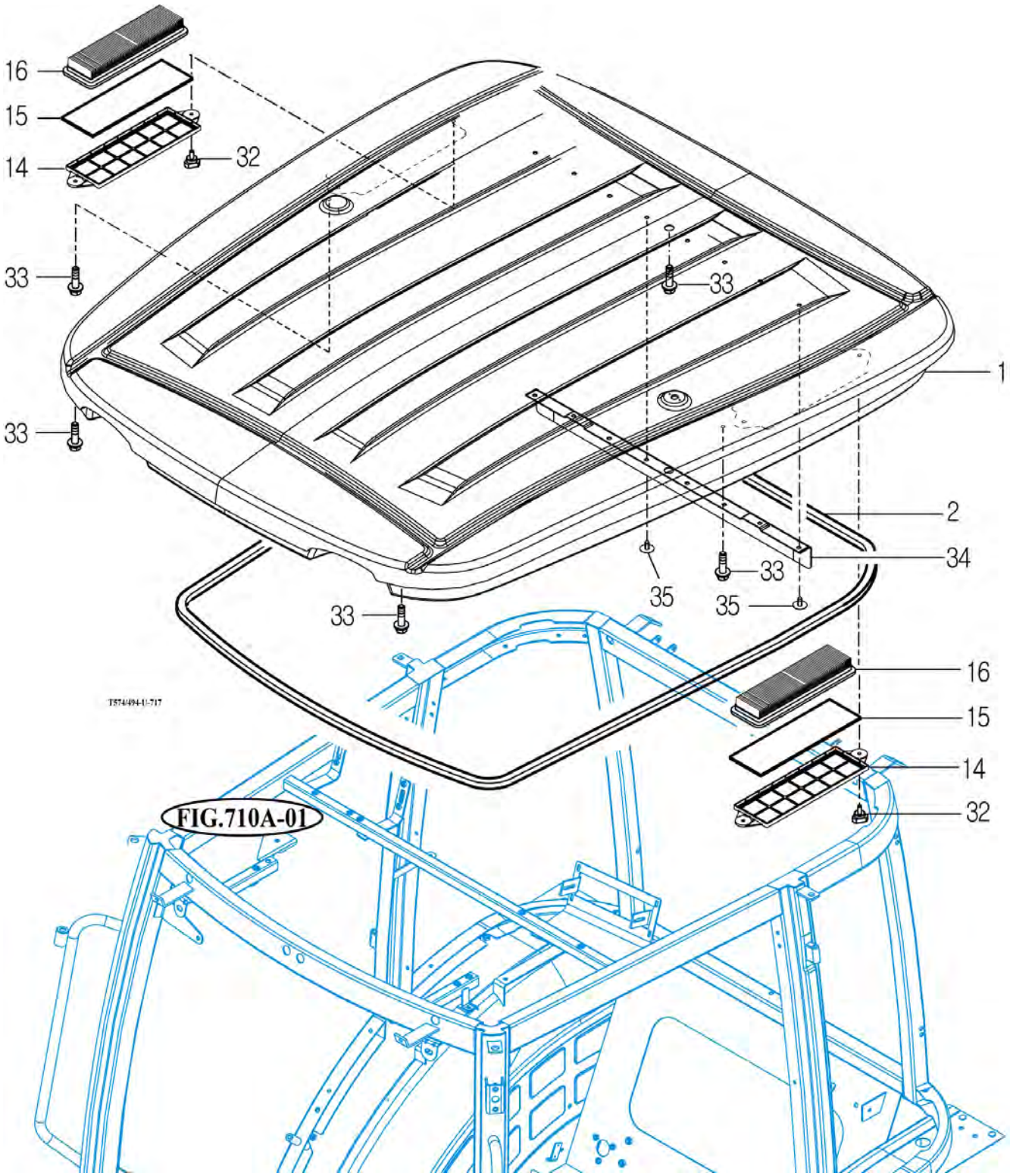

NOTE	

https://truckmanualshub.com/

FIG 718 T574ST / T574NC / T494ST / T494NC	CABIN INTERIOR	P1	YEAR 2018	

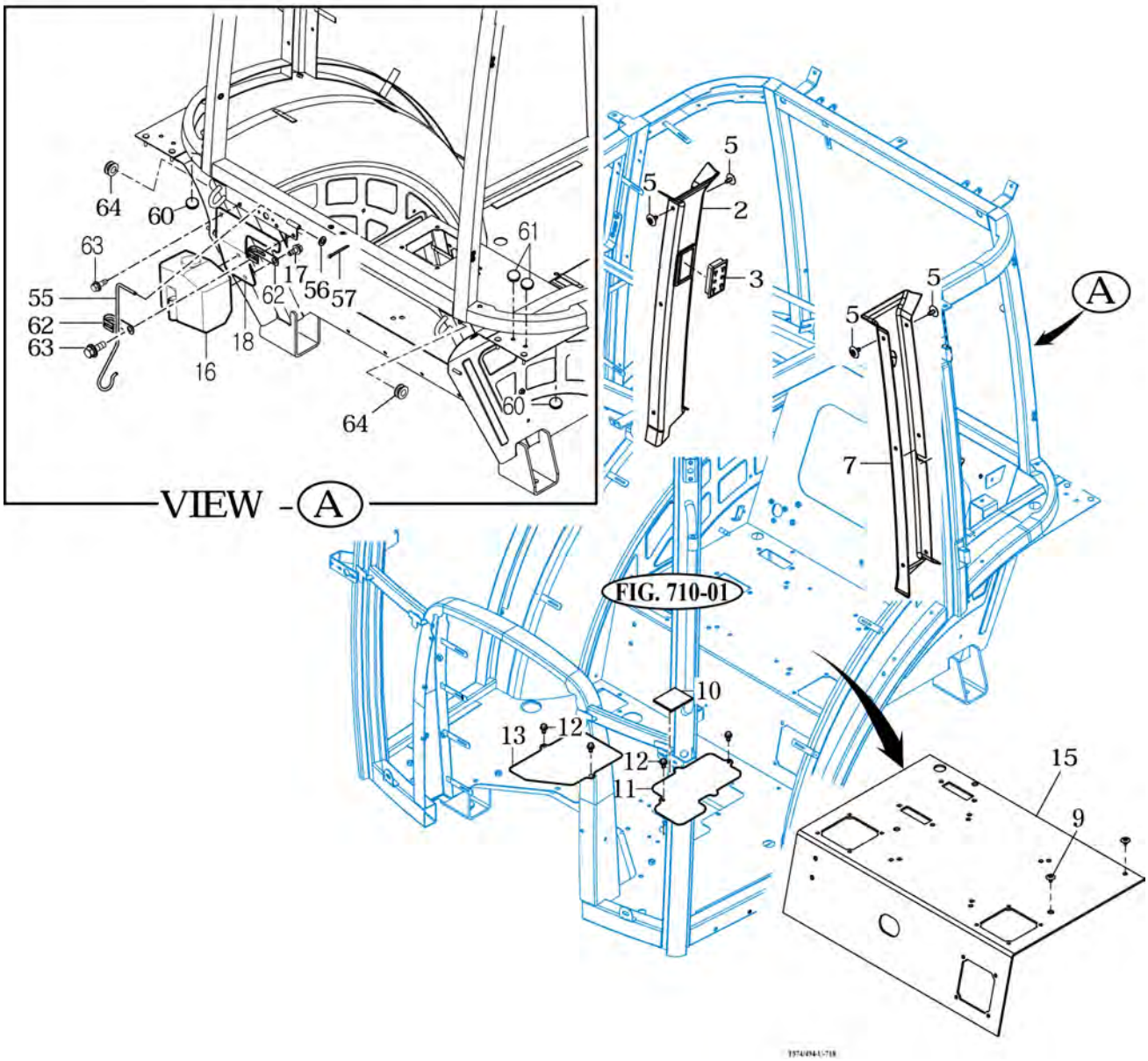

NOTE

https://truckmanualshub.com/

FIG 801 T574ST / T574NC / T494ST / T494NC	BATTERY & MOUNTING	P1	YEAR 2018	

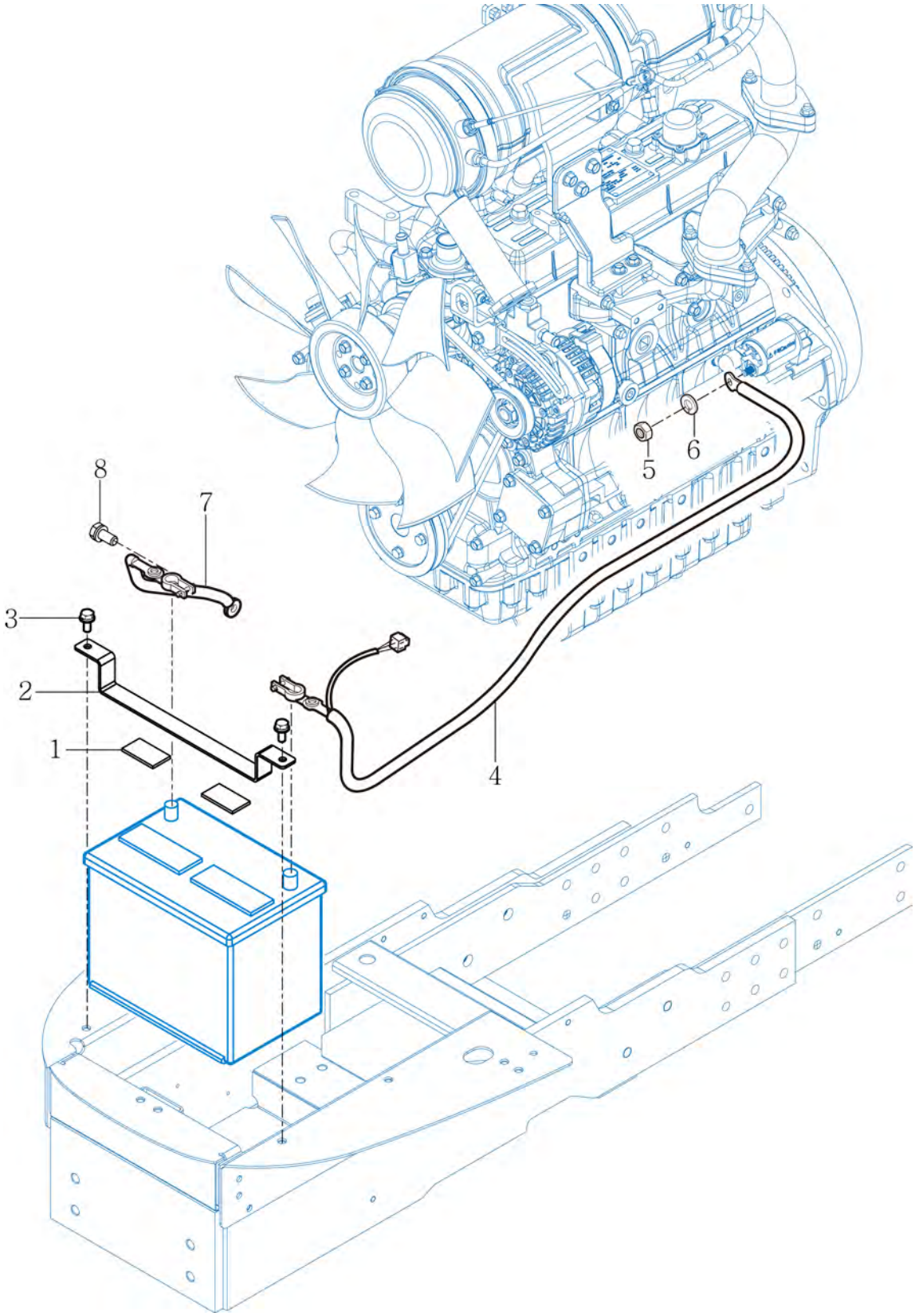

NOTE

https://truckmanualshub.com/

FIG 802 T574ST / T574NC / T494ST / T494NC	HARNESS LAMP	P1	YEAR 2018	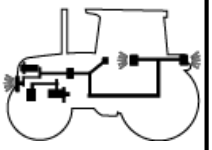

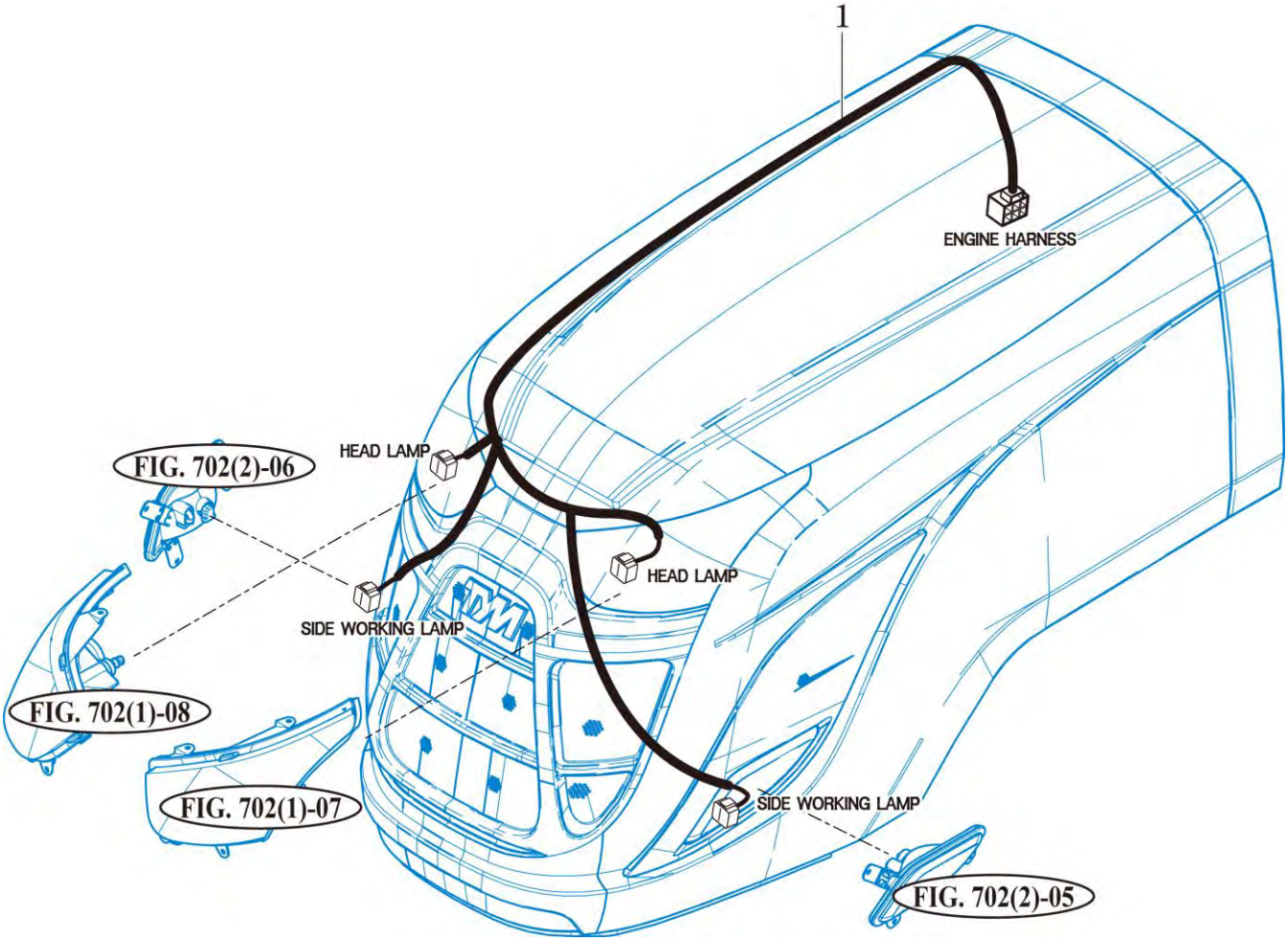

NOTE

https://truckmanualshub.com/

FIG 803 T574ST / T574NC / T494ST / T494NC	INSTRUMENT PANEL	P1	YEAR 2018	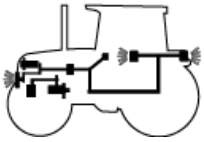

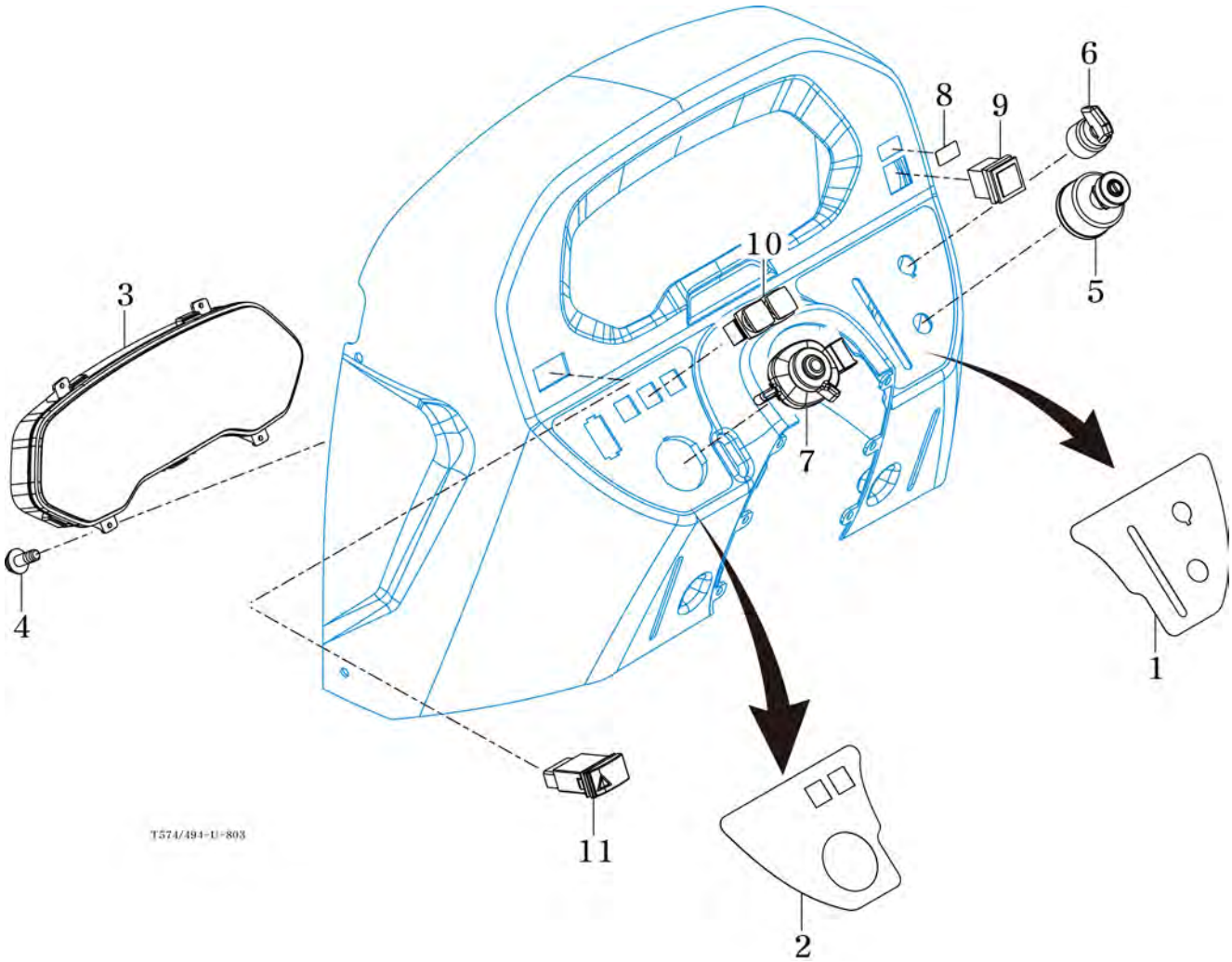

NOTE	

https://truckmanualshub.com/

FIG 804 T574ST / T574NC / T494ST / T494NC	ELECTRIC SYSTEM (1)	P1	YEAR 2018	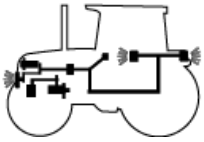

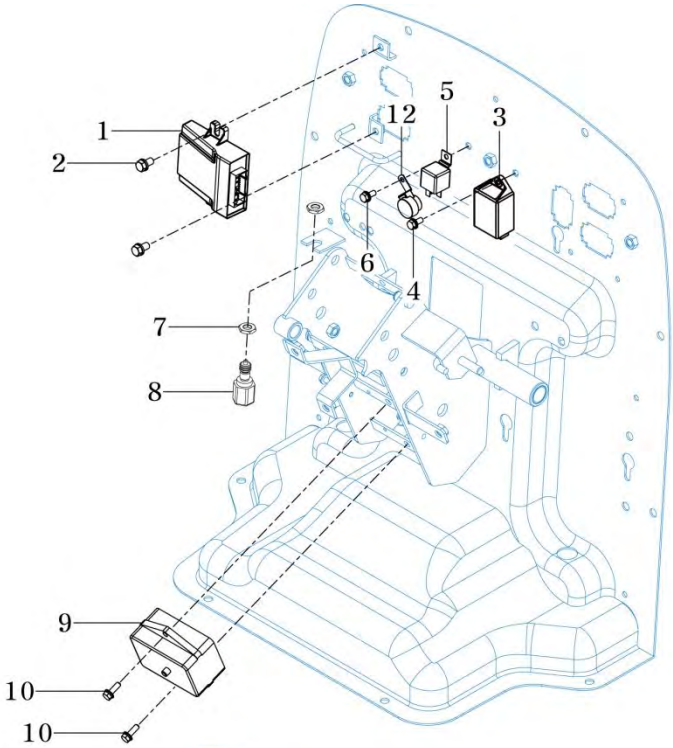

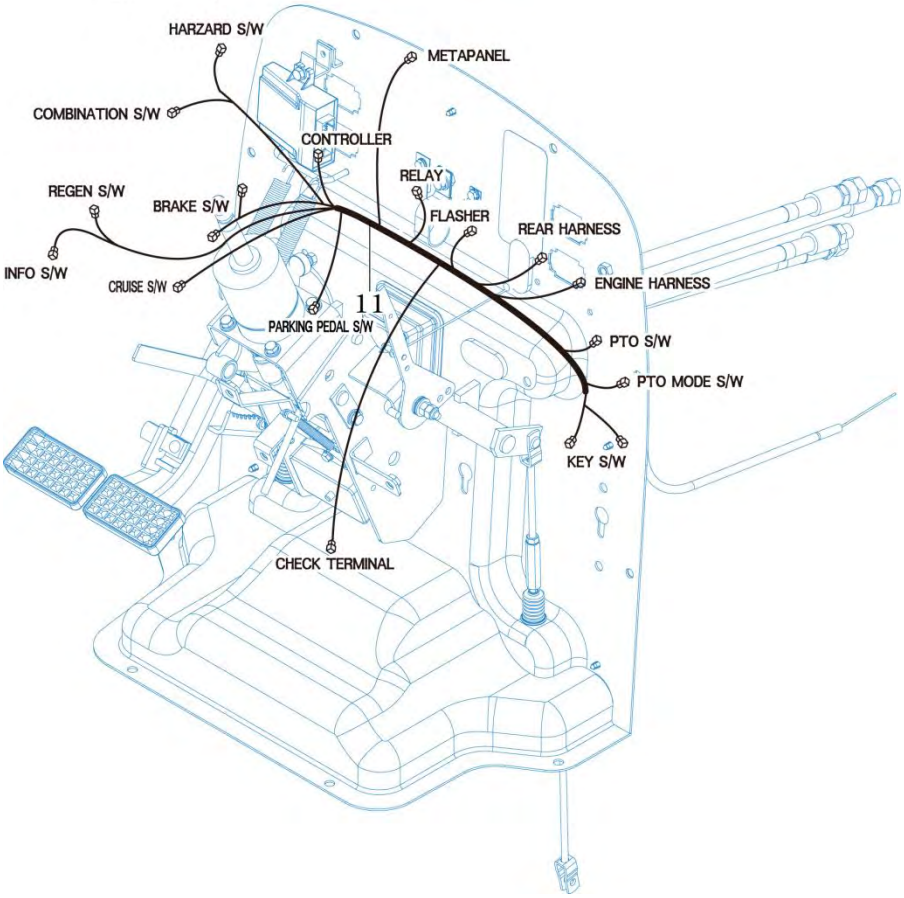

NOTE	

https://truckmanualshub.com/

FIG 805A T574ST / T574NC / T494ST / T494NC	ELECTRIC SYSTEM (2)	P1	YEAR 2018	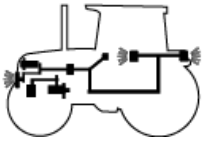

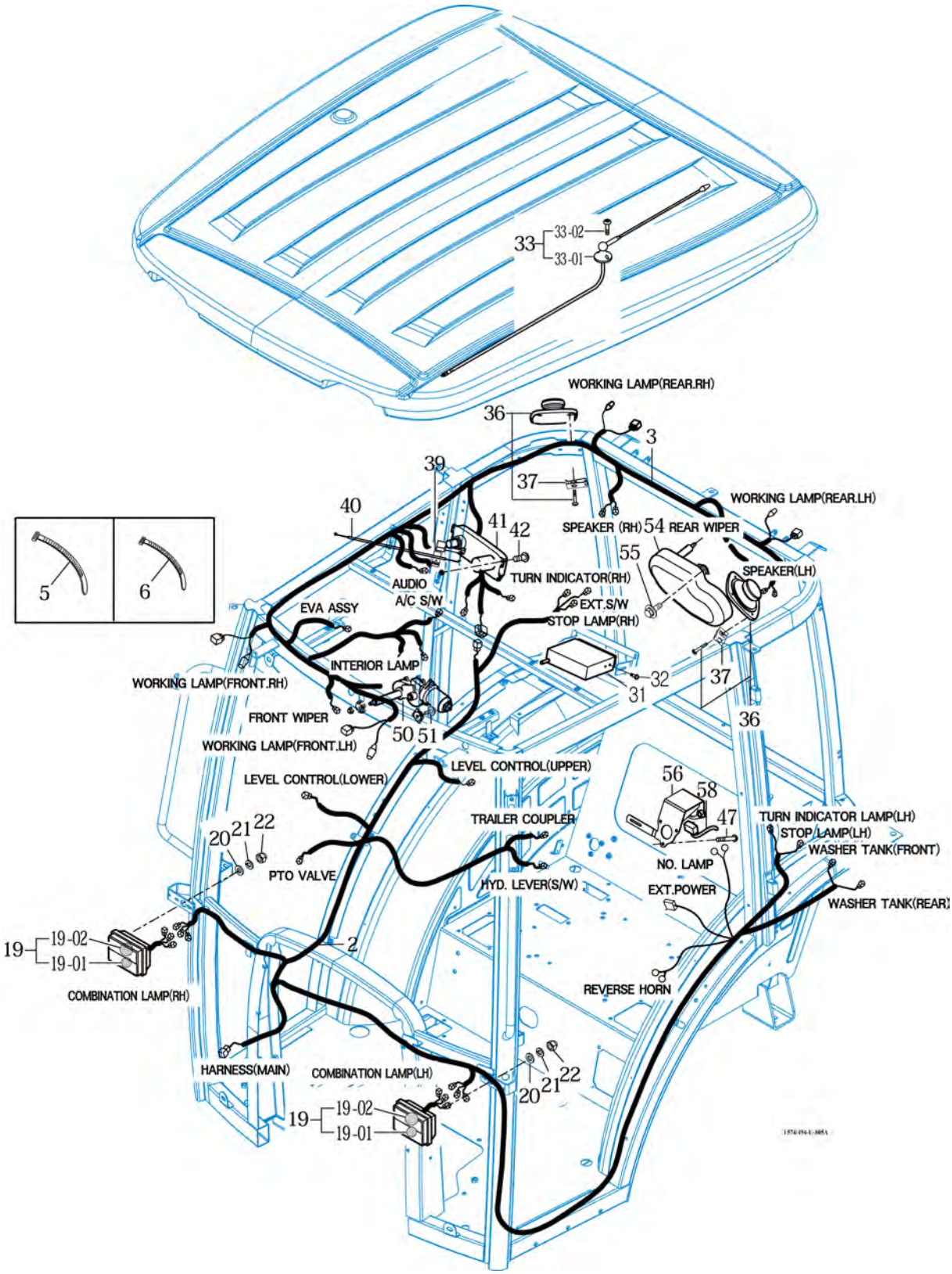

NOTE	

https://truckmanualshub.com/

FIG 805B T574ST / T574NC / T494ST / T494NC	ELECTRIC SYSTEM (2)-Non CAB	P1	YEAR 2018	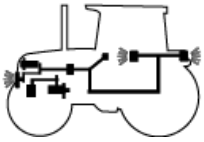

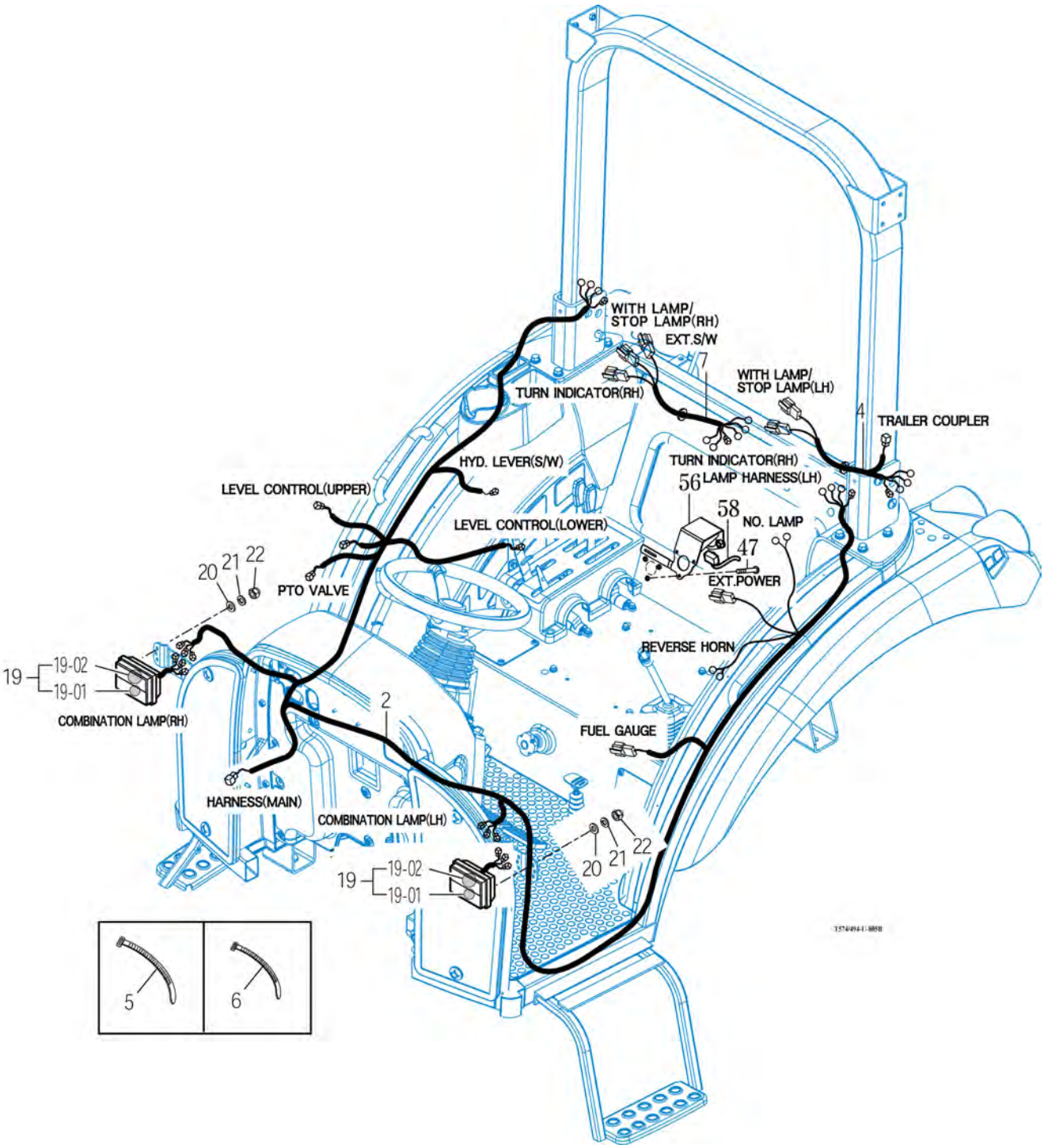

NOTE	

https://truckmanualshub.com/

FIG 806 T574ST / T574NC / T494ST / T494NC	ELECTRIC SYSTEM (3)	P1	YEAR 2018	

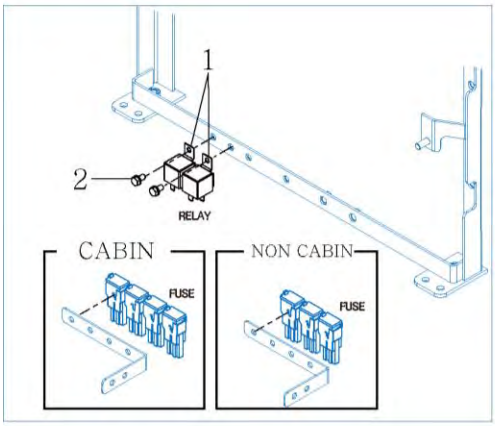

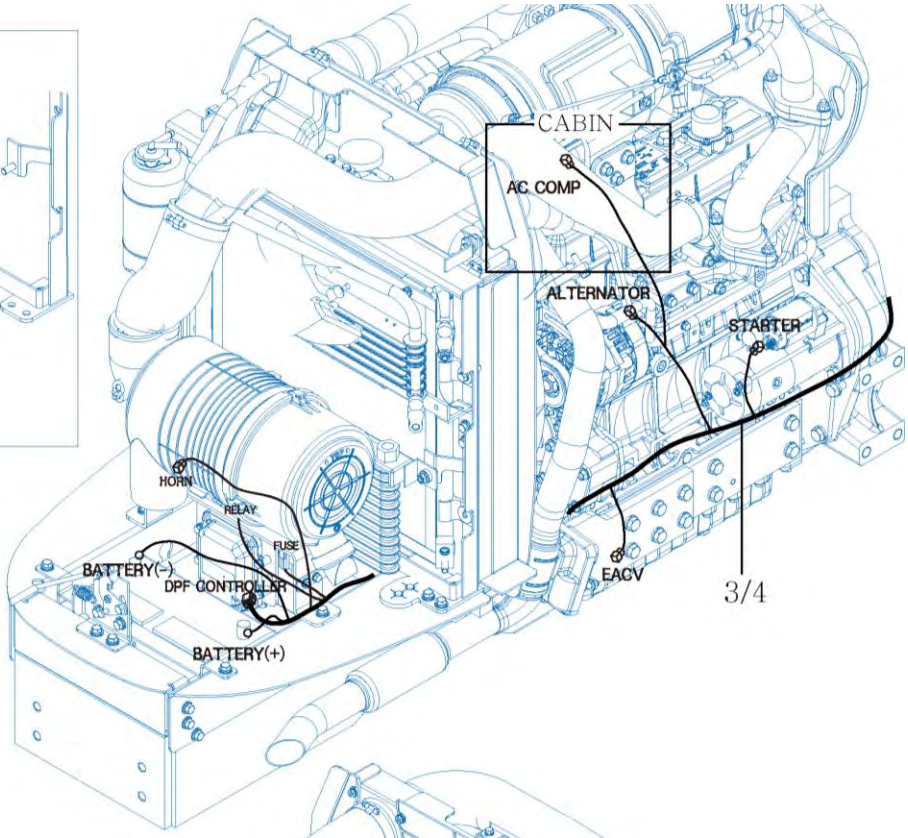

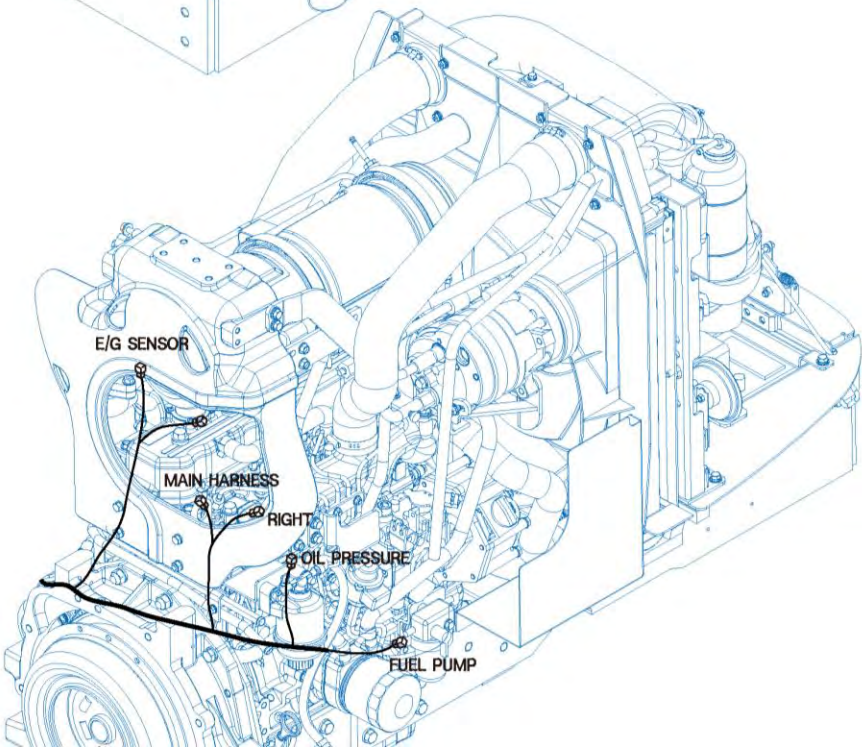

NOTE	

https://truckmanualshub.com/

TOOL & ACCESSORY

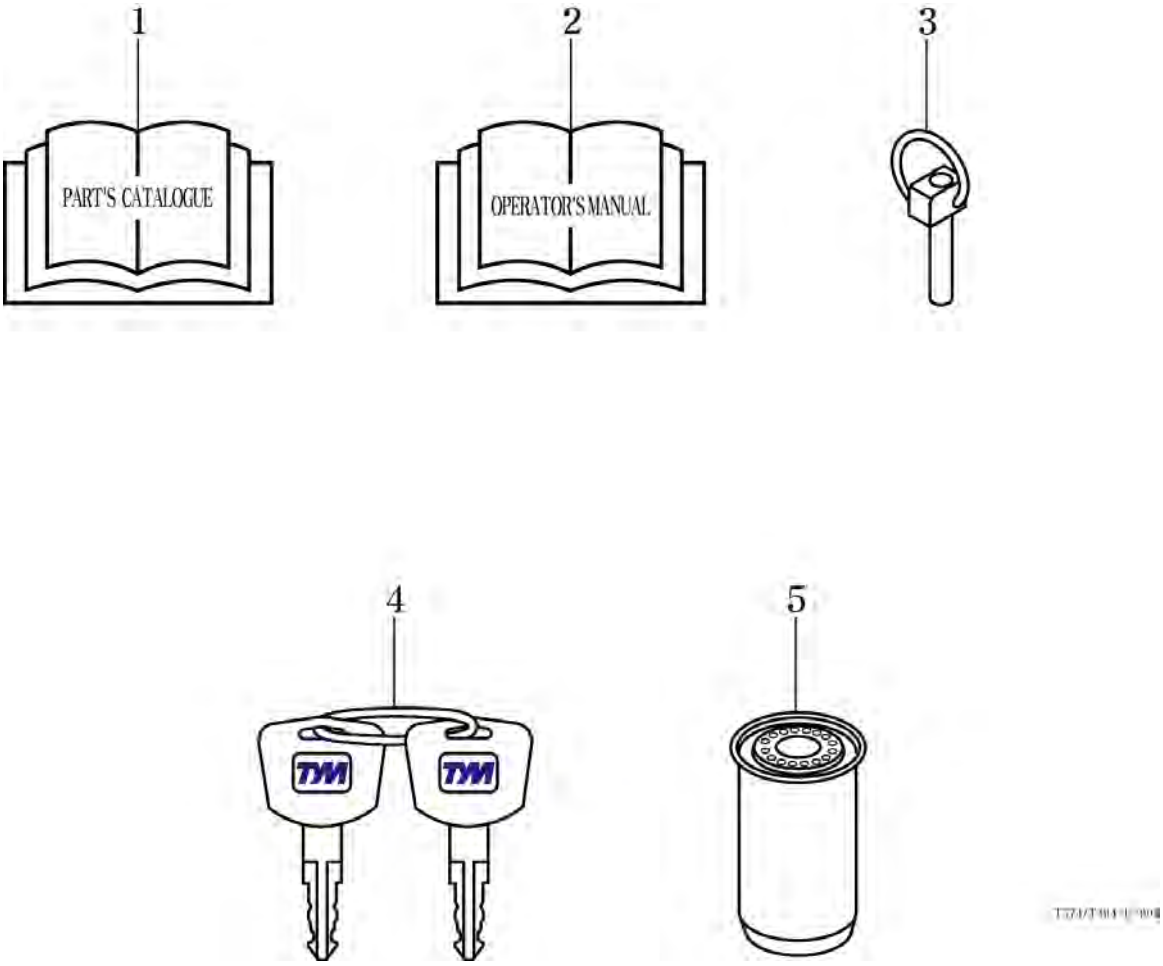

NOTE

https://truckmanualshub.com/

FIG 902 T574ST / T574NC / T494ST / T494NC	LABEL	P1	YEAR 2018	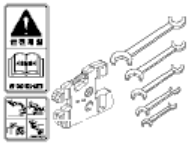

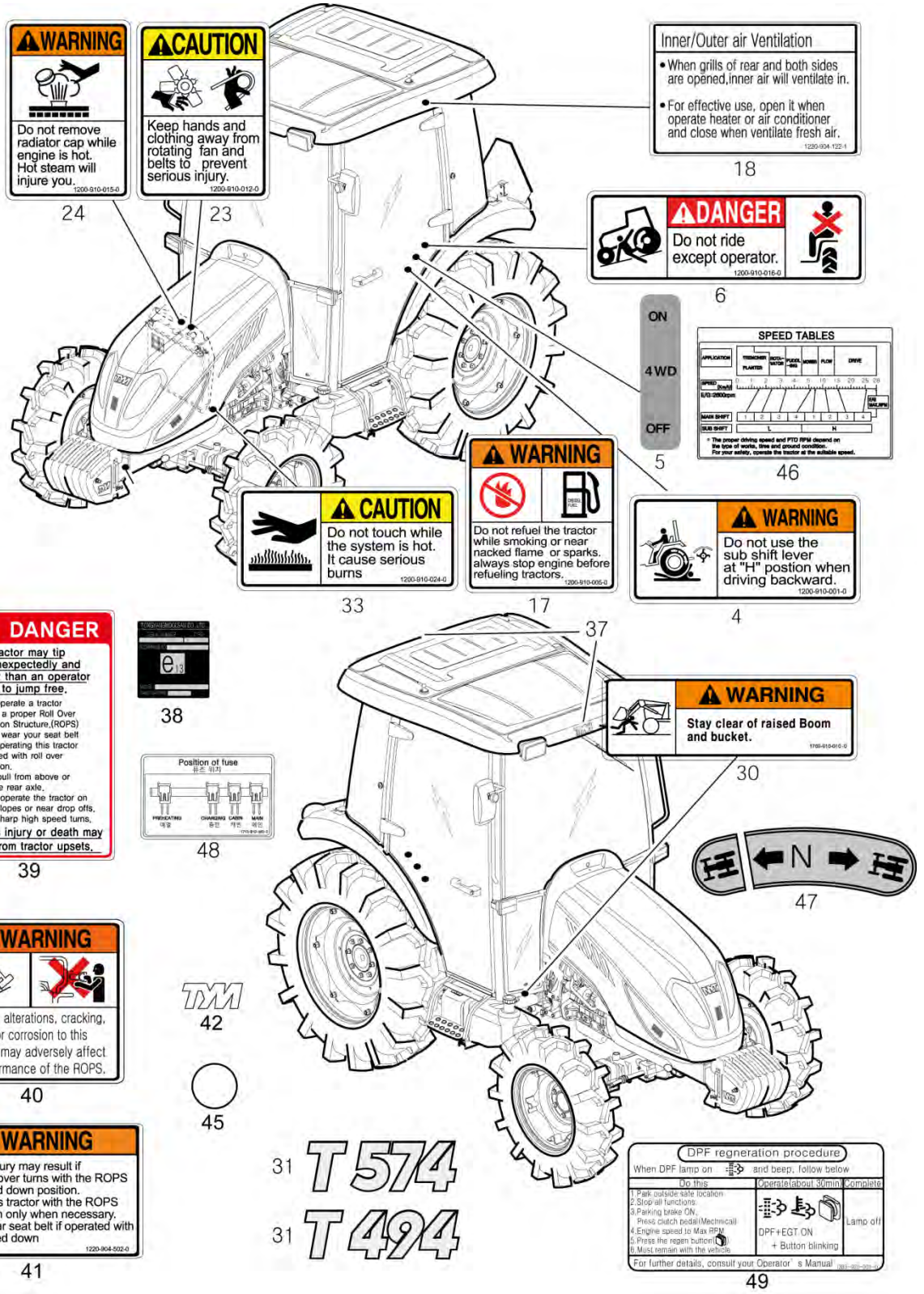

NOTE

https://truckmanualshub.com/

FIG 902 T574ST / T574NC / T494ST / T494NC	LABEL	P2	YEAR 2018	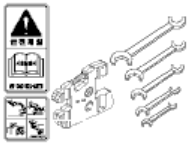

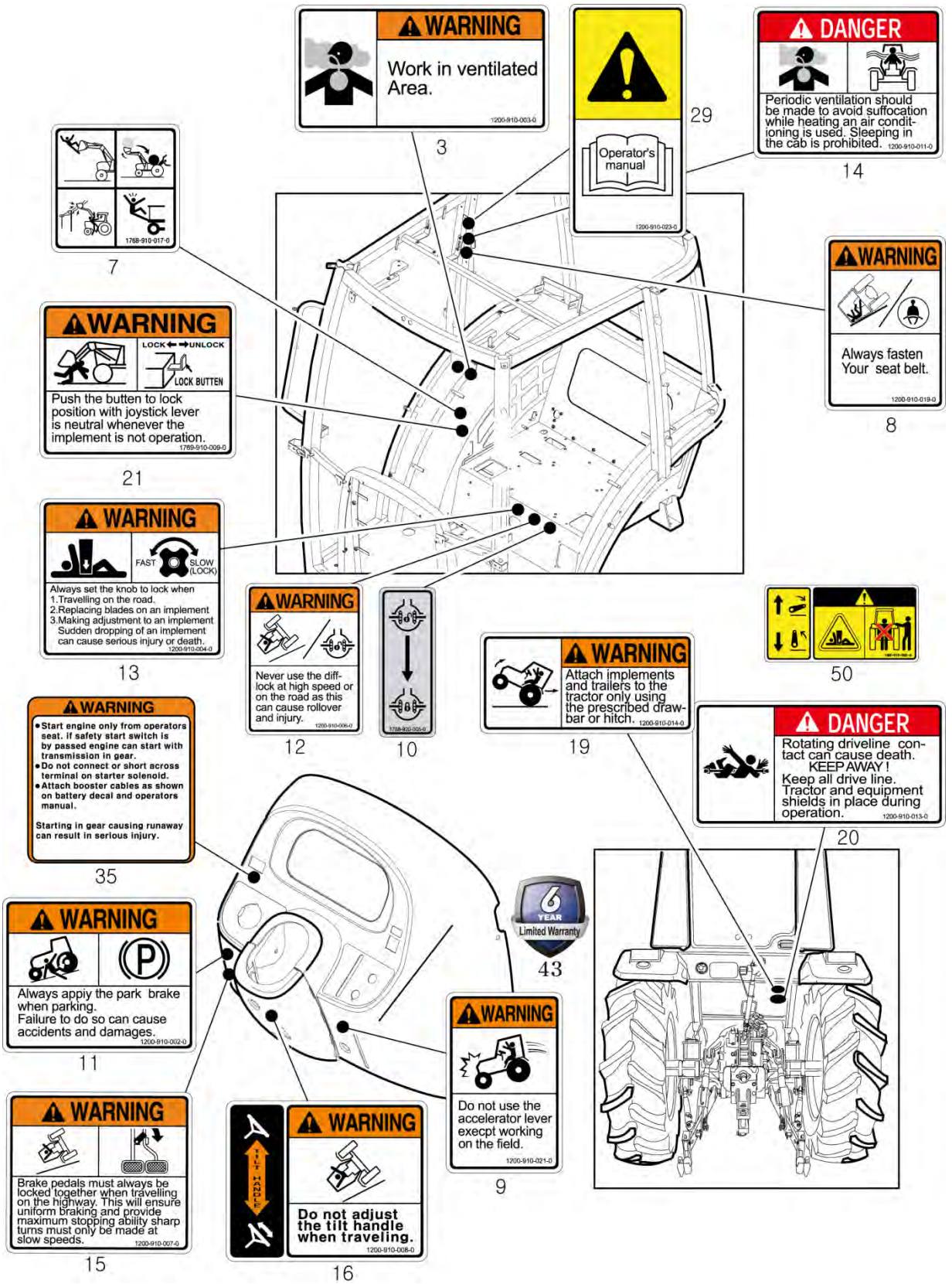

NOTE

https://truckmanualshub.com/

FIG 903 T574ST / T574NC / T494ST / T494NC	OPTION	P1	YEAR 2018	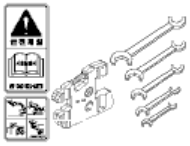

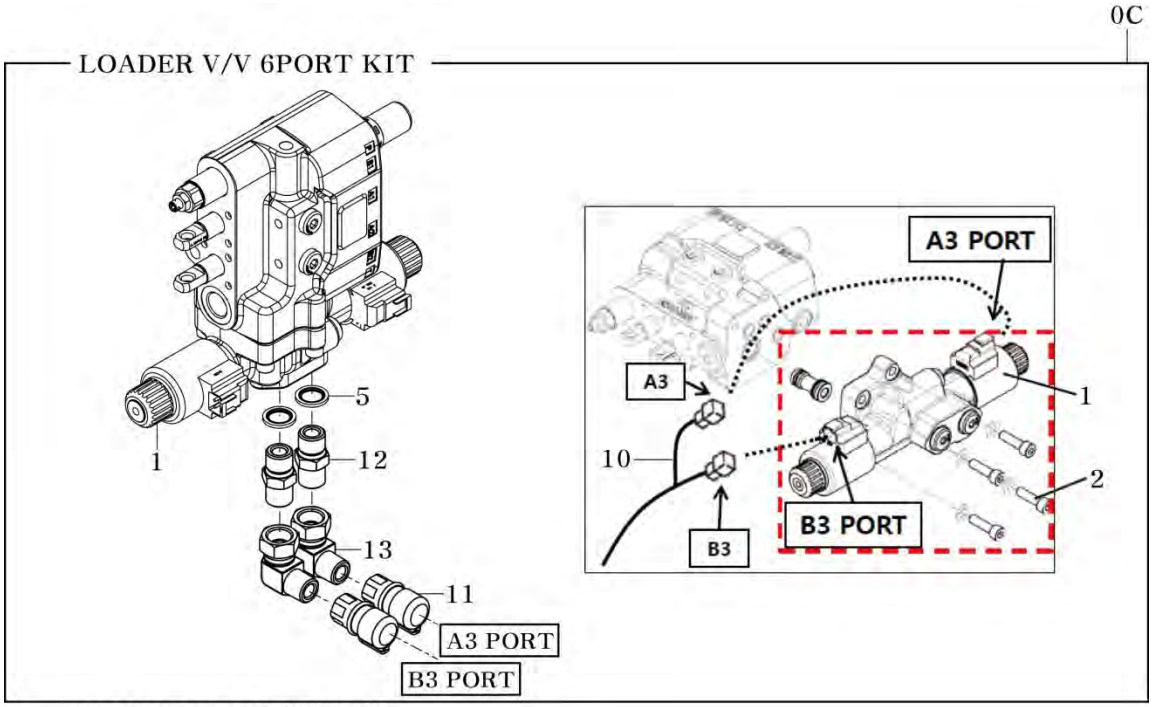

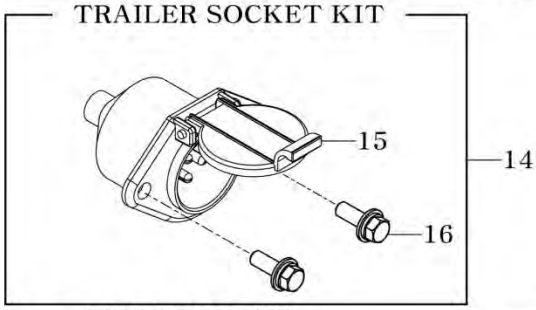

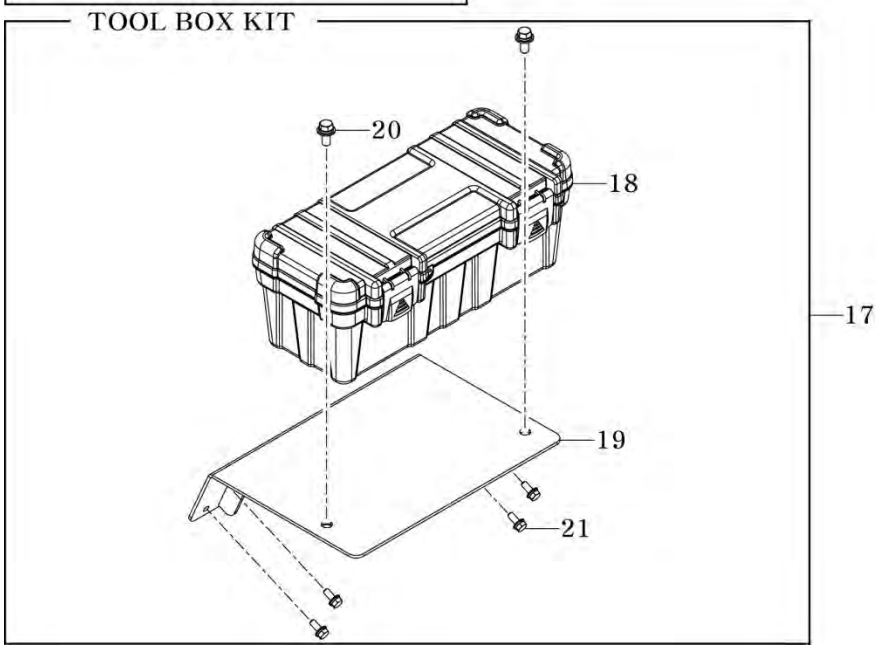

NOTE	