https://truckmanualshub.com/

BODY BUILDER INSTRUCTIONS

Mack Trucks

Transmission
PI / CHU, AN / CXU, GR / GU, TD
LR, TE / MRU
Section 4

Transmission

This information provides specifications for Transmissions on MACK vehicles.

Note: We have attempted to cover as much information as possible. However, this information does not cover all the unique variations that a vehicle chassis may present. Note that illustrations are typical but may not reflect all the variations of assembly.

All data provided is based on information that was current at time of release. However, **this information is subject to change without notice**.

Please note that no part of this information may be reproduced, stored, or transmitted by any means without the express written permission of MACK Trucks, Inc.

Contents:

- " mDrive Lubrication Capacity", page 2
- "Transmission Cautions", page 2
- "Transmission Oil Cooler", page 3
- "Transmission Literature", page 4
- "Adding Neutral Switch to T300 Series Transmission", page 4
- "T300 Series Transmission Gear Ratios", page 9
- "mDrive Transmission Gear Ratios", page 10
- "GR / GU Model Under-hood Allison Dipstick ", page 11

All Rights Reserved

https://truckmanualshub.com/

mDrive Transmission

mDrive Lubrication Capacity

Transmission	Oil Type	Capacity Including Cooler
***m*Drive – MACK**		
TmD12	**Refer to the approved oils list (SB 175–61)**	**17.9 quarts**
TmD13 / TmD14	**Refer to the approved oils list (SB 175–61)**	**20.5 quarts**

Transmission Cautions

CAUTION

The driveshaft must be removed before towing the vehicle. Failure to remove the driveshaft may result in damage to the transmission.

Note: The final stage manufacturer has the responsibility to certify that the completed vehicle conforms to all applicable motor vehicle safety standards, as referenced in the Incomplete Vehicle Document. The following installation precautions must be followed to the extent that they apply to the intended design of the incomplete vehicle.

Note: For additional Dangers, Warnings and Cautions refer to the "General Safety Practices, Transmission" bulletin. Failure to adhere to all safety practices can lead to the voiding of all applicable component warranties, component damage, personal injury or death.

1 Adequate tool clearance and suitable access openings for transmission adjustments must be provided. Transmission removal provisions must also be considered.
2 Transmission cooler lines must not be kinked, bent, or restricted. All cooler lines must be properly retained with adequate clips.
3 Before using transmission bolts, e.g., rear cover bolts or mounting bolts, contact your local MACK dealer for specific bolt length requirements, torque values and other constraints.
4 Transmission service identification tags must not be removed or destroyed. If the transmission is reworked or replaced, tag should be attached to the new transmission.
5 When painting the transmission, careful consideration should be given to keeping paint away from the breather and transmission output seal.
6 Transmission filler plugs should not be obstructed. Easy access for checking of lube level or filling is necessary.

Notes

All Rights Reserved

https://truckmanualshub.com/

Transmission Oil Cooler

Some variants of the transmission feature an oil cooler that is mounted directly to the transmission. It uses an engine thermostat controlled coolant circuit. Coolant is pulled from the engine block to supply coolant to the oil plate heat exchanger. Oil is exchanged between the plate cooler and oil filter. The coolant piping runs over the flywheel housing.

If the battery cables need to be disconnected for service, they should be clipped and properly rerouted over the flywheel housing. The battery cables should not touch the transmission oil coolant lines or the coolant lines could abrade and fail.

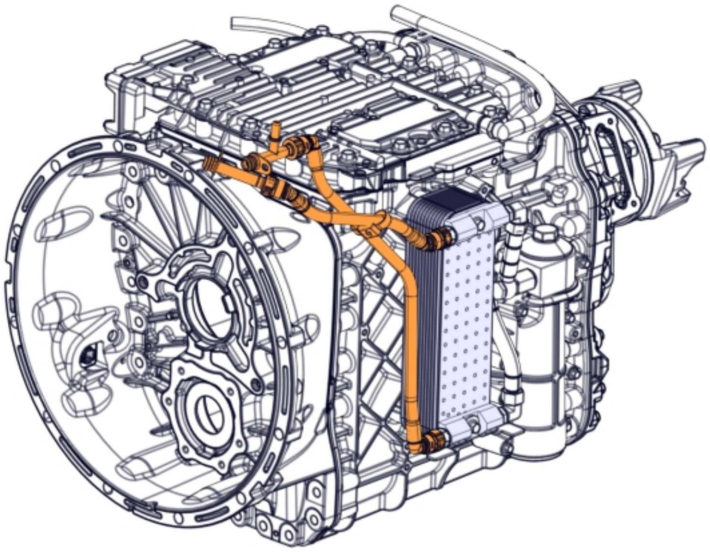

W4094207

Other variants of the transmission use the vehicle's radiator to cool transmission fluid. The coolant lines do not run over the top of the flywheel housing.

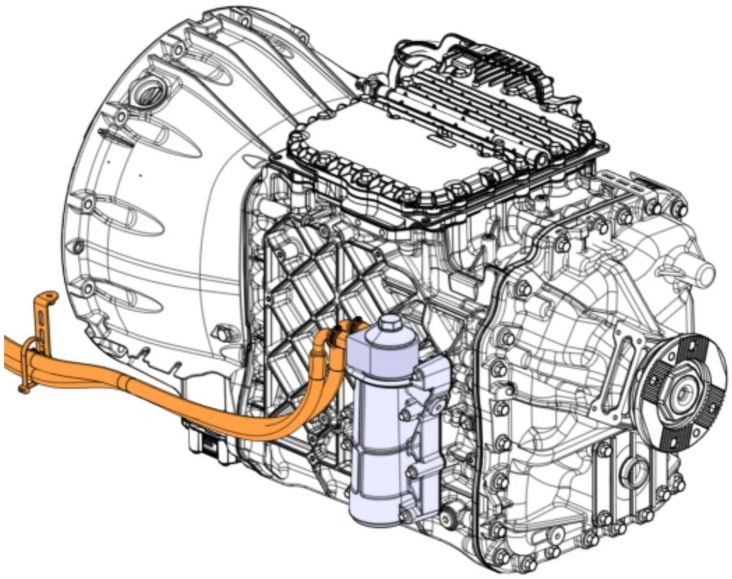

W4096815

All Rights Reserved

https://truckmanualshub.com/

Transmission Literature

Printed copies of Allison and Eaton transmission literature are no longer available from Allison and Eaton Transmission. Therefore, MACK Trucks is unable to supply this literature to its dealers.

However, service manuals and other literature for Allison and Eaton transmissions can now be accessed directly from the official internet site of this supplier.

To review or order Allison and Eaton transmission literature, please visit:

http://www.allisontransmission.com

http://www.eaton.com

Adding Neutral Switch to T300 Series Transmission

If a Neutral switch is required on a MACK T300 Series Transmission, some of the parts required for the Neutral switch are not available through the MACK Trucks Parts System but they can be fabricated by any reputable Machine Shop by supplying them a copy of pages 6, 7, and 8.

The items requiring fabrication are: See the “Range Shift Valve for Mack T200 and T300 Series Transmissions”, page 5 .
- Item 4 “Spacer Block”, page 7
- Item 7 “Detent Pin ”, page 6
- Item 5 “Sleeve”, page 8

The following parts are reused: See the “Range Shift Valve for Mack T200 and T300 Series Transmissions”, page 5 .
- Item 1 Range Shift Valve
- Item 3 Sleeve
- Item 6 Spring

The following parts will need to be purchased at your local Mack Dealer: See the “Range Shift Valve for Mack T200 and T300 Series Transmissions”, page 5 .
- Item 2 O-Rings 25107777 Qty. of 2
- Item 8 Switch 25157099 Qty. of 1
- Item 9 Pin 25499636 Qty. of 1

New mounting bolts will be required.

Hex screw 1/4 X 20 X 3.5” in length (Qty of 2) and cap screw flat countersink hex socket 1/4 X 20 X 2” in length (Qty of 2).

Notes

All Rights Reserved

https://truckmanualshub.com/

Range Shift Valve for Mack T200 and T300 Series Transmissions

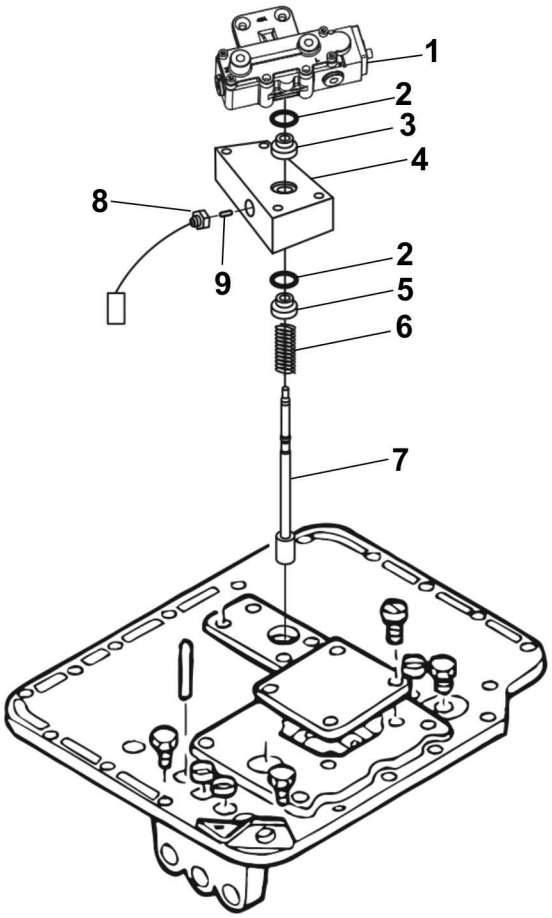

W4114412

Item	Description	Part Number	Quantity	Note
1	Range Shift Valve	25501490	1	Existing Part
2	O-Ring	25107777	2	Existing Part
3	Sleeve	25089624	1	Existing Part
4	Spacer Block	Fabricated	1	New Part
5	Sleeve	Fabricated	1	New Part
6	Spring	25101188	1	Existing Part
7	Detent Pin	Fabricated	1	New Part
8	Switch	25157099	1	Existing Part
9	Pin	25499636	1	Existing Part

All Rights Reserved

Detent Pin

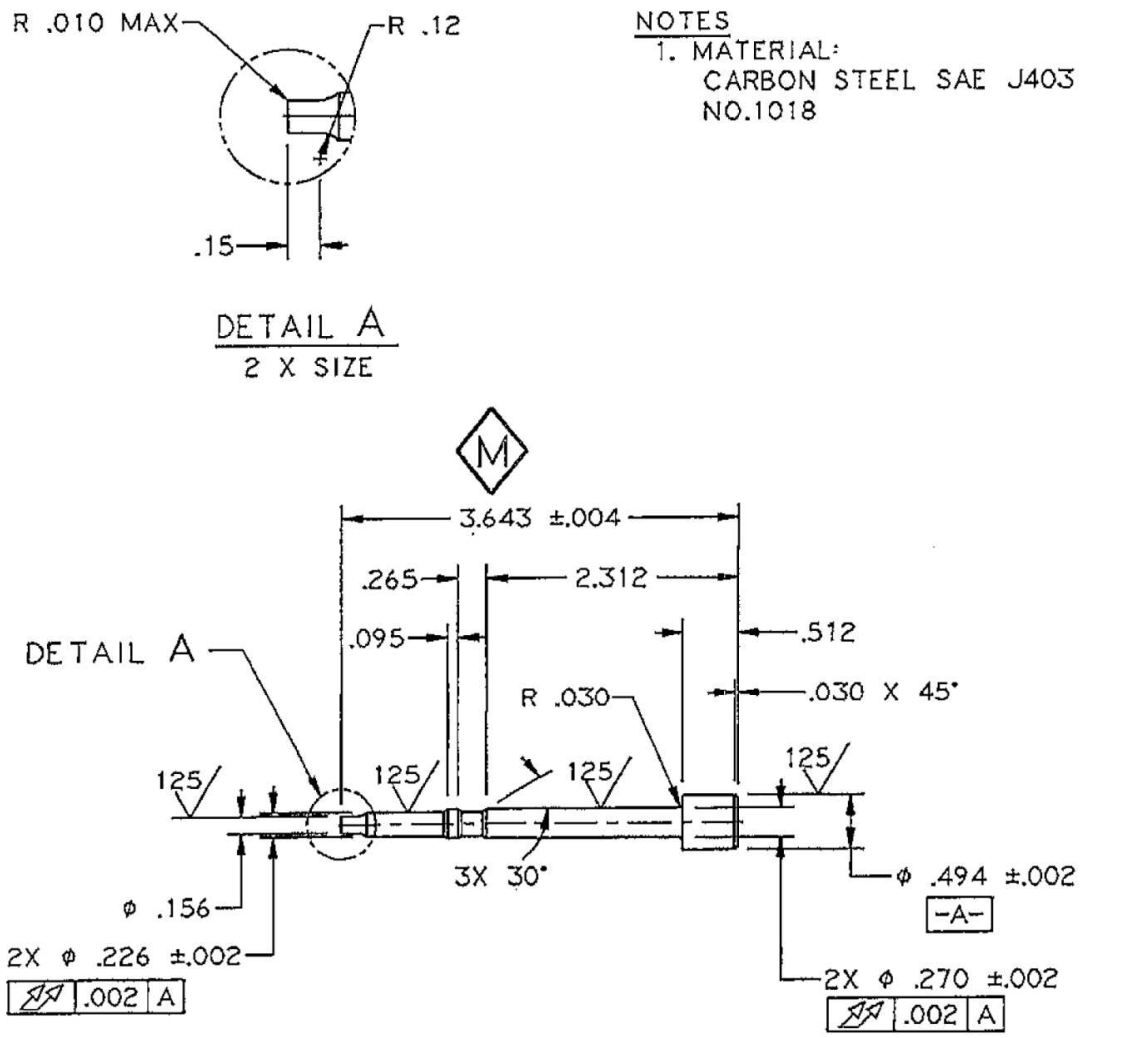

Note: Dimensions and Materials required to machine Detent Pin.

All Rights Reserved

https://truckmanualshub.com/

Spacer Block

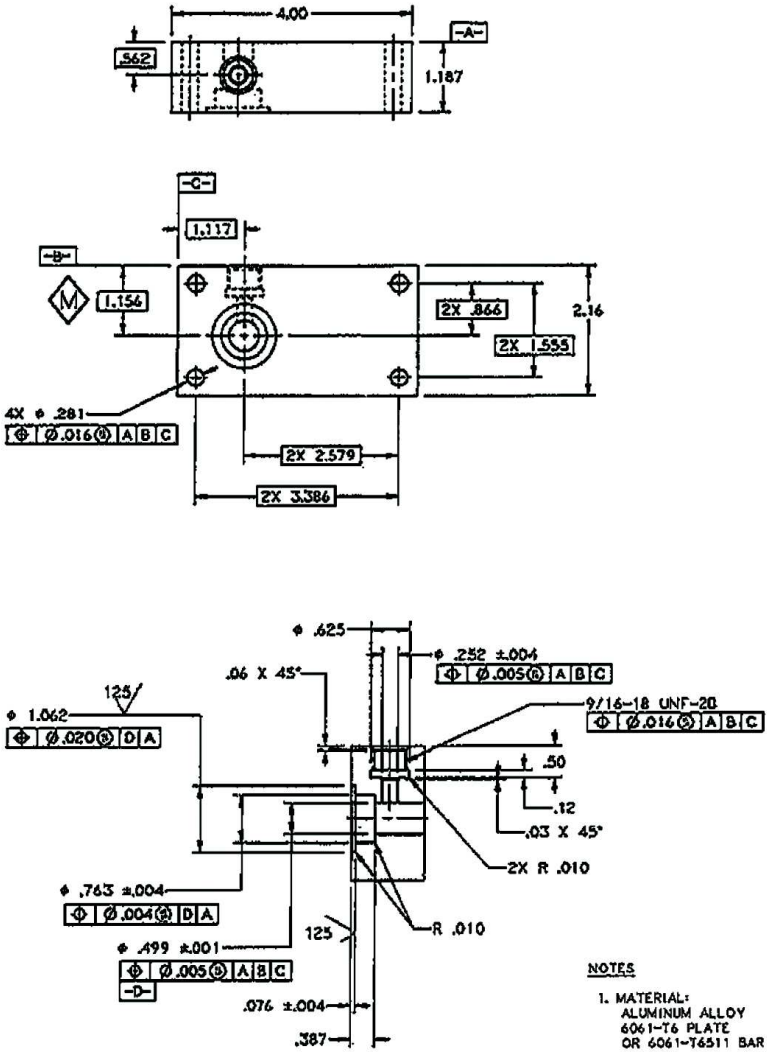

W4114936

Note: Material and Dimensions to machine Spacer Block housing.

All Rights Reserved

https://truckmanualshub.com/

Sleeve

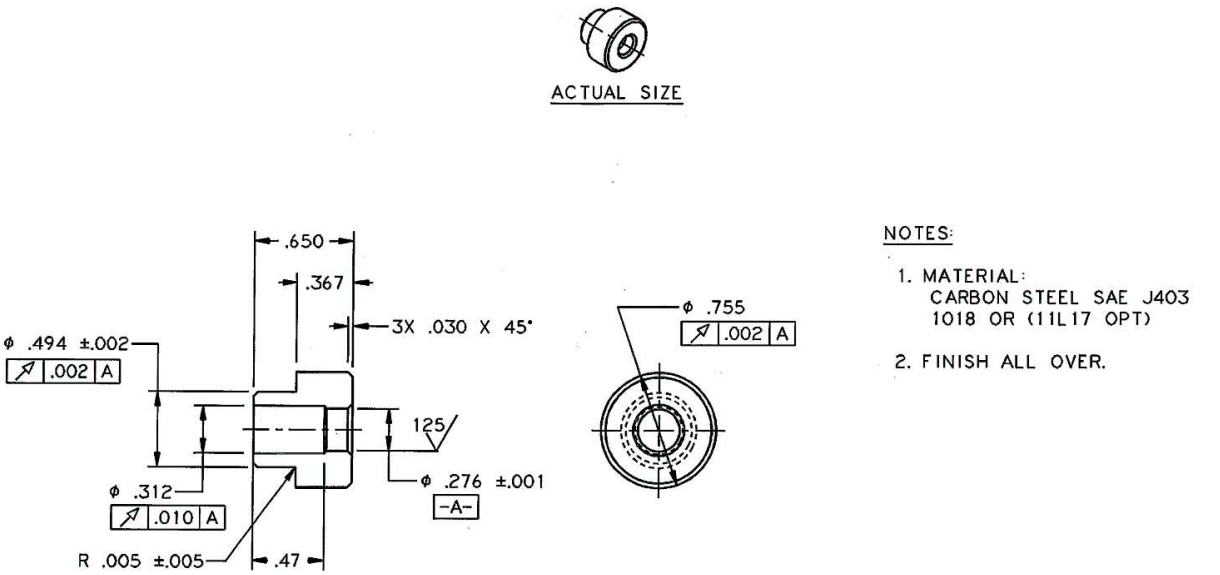

W4114971

Notes

All Rights Reserved

https://truckmanualshub.com/

T300 Series Transmission Gear Ratios

	Transmission Models												
Gear	**T306 & T306-G**	**T308 & T308-M**	**T-M308 & T-M308-M**	**T309**	**T309-LR**	**T-M309 & T-M309-M**	**T310**	**T310-M & ME & ME21**	**T310-MLR**	**T313 & T313-21**	**T313L & LR & LR21**	**T318 & T318-21**	**T318-L21 & T318-LR**
1st	7.5	20.08	17.77	11.24	13.74	25.21	13.81	17.35	27.3	13.44	16.42	13.44	16.42
2nd	4.08	11.68	10.94	7.35	7.35	15.52	10.05	11.4	13.9	8.78	8.78	11.4	13.93
3rd	2.41	6.63	6.57	5.25	5.25	9.73	7.18	7.45	7.45	6.28	6.28	8.78	8.78
4th	1.5	5.24	4.05	3.78	3.78	6.57	5.17	5.33	5.33	4.52	4.52	7.45	7.45
5th	1.00	3.05	2.54	2.69	2.69	4.05	3.75	3.83	3.83	3.22	3.22	6.28	6.28
6th	0.71	1.73	1.57	1.94	1.94	2.54	2.67	2.78	2.73	2.29	2.29	5.33	5.33
7th		1.00	1.00	1.39	1.39	1.57	1.94	1.94	1.94	1.94	1.94	4.52	4.52
8th		0.6	0.71	1.00	1.00	1.00	1.39	1.39	1.39	1.64	1.64	3.83	3.83
9th				0.71	0.71	0.71	1.00	1.00	1.00	1.39	1.39	3.22	3.22
10th							0.73	0.73	0.71	1.18	1.18	2.73	2.73
11th										1.00	1.00	2.29	2.29
12th										0.84	0.84	1.94	1.94
13th										0.71	0.71	1.64	1.64
14th												1.39	1.39
15th												1.18	1.18
16th												1.00	1.00
17th												0.84	0.84
18th												0.71	0.71

All Rights Reserved

https://truckmanualshub.com/

mDrive Transmission Gear Ratios

	Transmission Models				
Gear	**TMD12AD**	**TMD12AO**	**TMD13AD**	**TMD13AO**	**TMD14AO**
Crawler 1				17.54	32.04
Crawler 2					19.38
1st	14.94	11.73	14.94	11.73	11.73
2nd	11.73	9.21	11.73	9.21	9.21
3rd	9.04	7.09	9.04	7.09	7.09
4th	7.09	5.57	7.09	5.57	5.57
5th	5.54	4.35	5.54	4.35	4.35
6th	4.35	3.41	4.35	3.41	3.41
7th	3.44	2.70	3.44	2.70	2.70
8th	2.70	2.12	2.70	2.12	2.12
9th	2.08	1.63	2.08	1.63	1.63
10th	1.63	1.28	1.63	1.28	1.28
11th	1.27	1.00	1.27	1.00	1.00
12th	1.00	0.78	1.00	0.78	0.78

Notes

All Rights Reserved

https://truckmanualshub.com/

GR / GU Model Under-hood Allison Dipstick

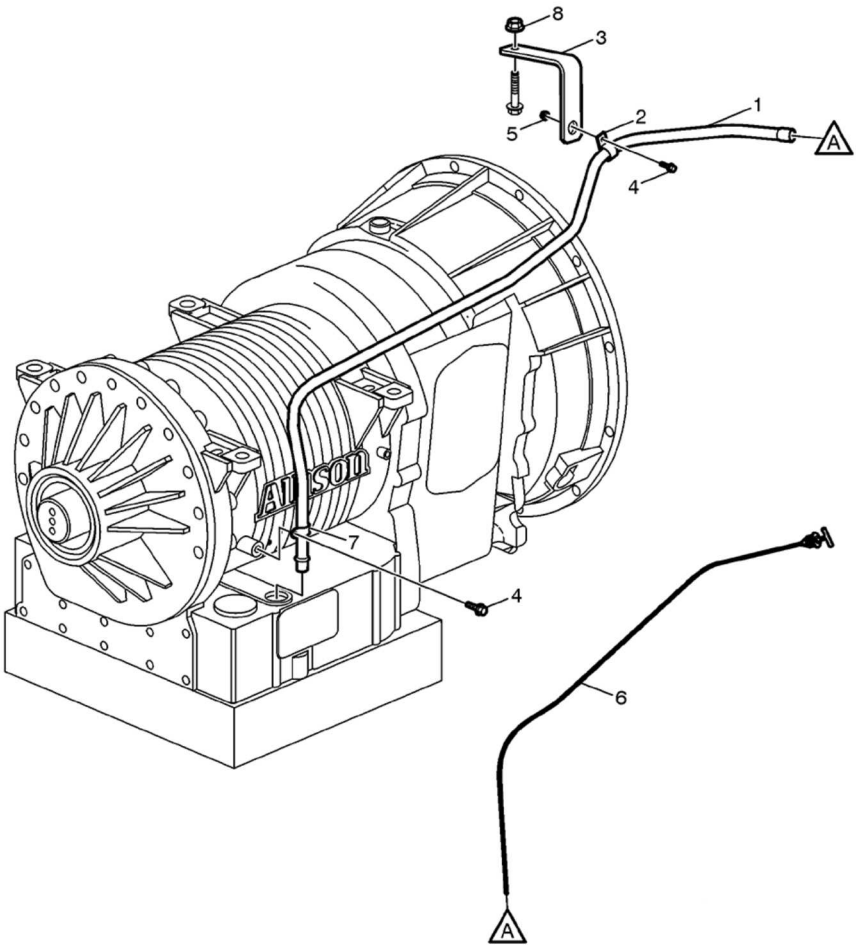

W4126865

Item	Part Number	Description	Qty.
1	22101981	Dipstick Tube	1
2	190397	Clamp	1
3	22555679	Bracket	1
4	995462	Flange Screw	2
5	990939	Flange Nut	1
6	22027929	Dipstick	1
7	25161716	Clamp	1
8	990940	Flange Nut	1

All Rights Reserved