https://truckmanualshub.com/

Apollo

macchine edili ed agricole S.r.l.

DIECI

OPERATION AND MAINTENANCE MANUAL

Via E. Majorana, 2-4
42027 Montecchio Emilia (RE) ITALY
Tel. +39 0522 869611 Fax +39 0522 869744
www.dieci.com - *E-mail: info@dieci.com*

CE

ATTENTION: ALWAYS KEEP A COPY OF THIS MANUAL ON THE MACHINE AT THE OPERATOR'S DISPOSAL

Courtesy of Crane.Market

AXH1147/UK

https://truckmanualshub.com/

Courtesy of Crane.Market

https://truckmanualshub.com/

EVERY TELESCOPIC LIFT IS ACCOMPANIED BY:
A COPY OF THIS MANUAL,
A COPY OF THE ENGINE USE AND MAINTENANCE MANUAL DRAWN-UP BY THE MANUFACTURER
A COPY OF THE USE AND MAINTENANCE MANUAL RELATIVE TO EVERY DEVICE OR EQUIPMENT WITH WHICH THIS VEHICLE IS SUPPLIED.

THESE MANUALS ARE WRITTEN BY THE RESPECTIVE PRODUCT SUPPLIERS, OR REPRODUCED ACCURATELY AND IN FULL BY *DIECI S.r.l.* WITH THEIR SPECIFIC AUTHORISATION: THEY MAY INCLUDE ADDITIONAL SPECIFICATIONS WRITTEN BY *DIECI S.r.l.*

www.dieci.com

VIA E. MAJORANA, 2-4
42027 - MONTECCHIO E. (RE) - ITALY
TEL. ++39 0522-869611
FAX ++39 0522-869744
e-mail: info@dieci.com

Cap. Soc. Int. Vers. € 10.000.000,00
Reg.Impr. R.E. N. 01283560686 - R.E.A. R.E. N. 204278
C.F. 01283560686 - P.I. 01682740350

DIECI S.r.l. does not consider itself liable for damage deriving from the use of NON original spare parts

UFF. ASSISTENZA E RICAMBI
Tel. ++ 39 0522-869611 - FAX ++ 39 0522-869744

DEPARTAMENTO DE ASISTENCIA Y REPUESTOS
Tel. ++ 39 0522-869611 - FAX ++ 39 0522-869744

BUREAU ASSISTANCE ET PIÈCES DE RECHANGE
Tel. ++ 39 0522-869611 - FAX ++ 39 0522-869744

SERVICE AND SPARE PARTS DEPARTMENT
Tel. ++ 39 0522-869611 - FAX ++ 39 0522-869744

USE AND MAINTENANCE MANUAL ***Issue 2-1 - 09/2011*** ***Translation of the Original Instructions*** ***Traduzione delle istruzioni originali***	**Apollo 25.6**
Cod.: AXH1147/UK	

WARNINGS:

All documentation provided constitutes and integral and important part of the product and must always be available to users; users must carefully read the aforementioned documentation before using the machine.

Improper, incorrect, or irrational use of the vehicle or the accessories with which it is equipped as well as modification to its physical structure or functioning is prohibited.

THE TOTAL OR PARTIAL REPRODUCTION OF THE CONTENTS OF THIS MANUAL OR ANY MULTI-MEDIA ENCLOSURES IS PROHIBITED:
***Dieci S.r.l.* WILL PROTECT THE OWNERSHIP RIGHTS OF THESE MATERIALS**

ATTENTION: A COPY OF THIS MANUAL MUST ALWAYS BE IN THE VEHICLE FOR THE DRIVER'S REFERENCE.

1 Dieci **2** Dieci **3** Uff.Tec **4** Devid **5** MTKeR **7** Digigraph **8** Globe **9** 09/2011 **10** AXH1147/UK Ed.2-1

Courtesy of Crane.Market

https://truckmanualshub.com/

Courtesy of Crane.Market

https://truckmanualshub.com/

SUMMARY

CHAPTER “A”
INTRODUCTION, GUARANTEE, VEHICLE IDENTIFICATION

INTRODUCTION A/3
GUARANTEE A/4
VEHICLE IDENTIFICATION A/6
TELESCOPIC LIFT IDENTIFICATION A/7
DECLARATION OF CONFORMITY A/9

CHAPTER “B”
SAFETY REGULATIONS

ACKNOWLEDGING SAFETY REGULATIONS B/2
GENERAL WARNINGS B/3
PROTECTIVE CLOTHING B/4
INSPECTING THE VEHICLE B/4
PREPARATION FOR EMERGENCIES B/5
FIRST AID B/6
DRIVER’S CAB B/7
DRIVING AUTHORISATIONS B/8
STARTING UP THE VEHICLE B/9
ENVIRONMENTAL CONDITIONS B/9
SAFE OPERATION B/10
LOAD HANDLING B/14
PARKING THE VEHICLE B/15
TEMPORARY HALT B/15
ROAD TRAVEL B/16
ROAD TRAVEL (INSTRUCTIONS) B/16
HOISTING THE MACHINE B/17
TRANSPORTING THE MACHINE B/17
ELECTROMAGNETIC INTERFERENCE B/18
VIBRATIONS B/18
NOISE B/18
PERFORMING MAINTENANCE WORK SAFELY B/18
CLEANING YOUR MACHINE B/21
CLEANING THE WINDOWS B/21
CLEANING THE CAB B/21
SAFETY STICKERS B/21
STORING THE MACHINE / PROLONGED INACTIVITY B/22
PREPARATION AFTER PROLONGED INACTIVITY B/22
FIRE PREVENTION B/23
BATTERIES B/24
STARTING UP WITH AUXILIARY BATTERIES B/25
ELECTRICAL SYSTEM OVERLOAD PROTECTION B/26
TIGHTENING WHEEL NUTS B/27
TYRES B/27
TYRE PRESSURE TABLE B/27
STORING DANGEROUS FLUIDS B/29
CONTACT WITH DANGEROUS FLUIDS B/29
DIESEL B/30
RECOMMENDED FUEL SPECIFICATIONS B/30
CLEANING AND STORING DIESEL FUEL B/31
ECOLOGICAL CONSIDERATIONS B/32
WASTE DISPOSAL B/32
CHECKING THE WIND SPEED B/34
EVALUATE THE CONSISTENCY OF THE GROUND B/35
SAFETY DEVICES B/36
VEHICLE SAFETY DEVICE HOUSING B/37
DRIVER’S CAB B/39
ROPS-FOPS CAB B/39
LOAD TABLES B/40
USING THE LOAD TABLES AND BOOM INDICATORS B/40
NOTE-BOOK WITH ESSENTIAL DATA B/42
LOAD HANDLING B/44
SAFETY STICKERS B/48
SAFETY STICKERS AND THEIR LOCATION B/50
STICKERS FOR USE AND MAINTENANCE B/51

Courtesy of Crane.Market

https://truckmanualshub.com/

CHAPTER C
USER INSTRUCTIONS AND GETTING TO KNOW THE VEHICLE

GENERAL WARNINGS....C/4
HAND SIGNALS....C/5
IDENTIFYING THE VEHICLE PARTS....C/6
EXTERNAL CAB COMPONENTS....C/7
INTERNAL CAB COMPONENTS....C/7
GETTING IN AND OUT OF THE DRIVER'S CAB....C/8
DOOR OPENING CONTROLS....C/8
INTERNAL DOOR OPENING CONTROLS....C/8
OPENING THE DOOR WINDOW....C/9
REAR WINDOW....C/9
REAR EMERGENCY EXIT....C/10
MAX POWER 180W....C/10
INTERNAL CAB LIGHT....C/10
TECHNICAL DOCUMENTATION POCKET....C/11
STEERING WHEEL (ADJUSTMENT)....C/11
SEAT....C/12
SEAT BELTS....C/13
INTERIOR CAB INSTRUMENTS....C/15
CENTRAL DASHBOARD - INDICATOR LIGHTS....C/16
CENTRAL DASHBOARD - INSTRUMENT USE....C/17
DASHBOARD WITH INSTRUMENTS - LEFT DASHBOARD....C/18
DASHBOARD WITH INSTRUMENTS - RIGHT DASHBOARD....C/19
IGNITION SWITCH....C/21
DASHBOARD LEVERS....C/22
MULTI-FUNCTION LEVER....C/23
PEDALS....C/24
PARKING BRAKE....C/25
SPIRIT LEVEL....C/26
BOOM CONTROL LEVER....C/27
JOYSTICK 3 IN 1 PROPORTIONAL EXTENSION (STANDARD VERSION)....C/28
SERVICE CONTROL LEVER....C/29
JOYSTICK 4 IN 1 ON-OFF SERVICES PROPORTIONAL CONTROL EXTENSION....C/30
JOYSTICK 4 IN 1 PROPORTIONAL SERVICES PROPORTIONAL CONTROL EXTENSION....C/31
VEHICLE FUNCTIONS SELECTOR....C/35
ANTI-TIPPING DEVICE CHECK....C/36
STEERING SELECTOR ALIGNMENT (STANDARD)....C/37
FRONT WINDSCREEN WIPER CONTROLS....C/38
REAR WINDSCREEN WIPER CONTROLS....C/38
EMERGENCY LIGHTS SELECTOR....C/38
MANUAL ACCELERATOR....C/38
INTERNAL CAB VENTILATION....C/39
REVOLVING LIGHT SWITCH....C/41
FRONT CAB LIGHTS SWITCH (OPTIONAL)....C/41
REAR CAB LIGHTS SWITCH (OPTIONAL)....C/41
BOOM HEAD LIGHT SWITCH (OPTIONAL)....C/42
BOOM HEAD SOLENOID VALVE (OPTIONAL)....C/43
REAR HYDRAULIC SOCKETS (OPTIONAL)....C/44
DUMP BODY LOWERING (OPTIONAL)....C/45
WATER HEATER (OPTIONAL)....C/46
FRONT HOOK....C/47
TOWING HOOK....C/48
COURTESY COMPARTMENT....C/49
TOWING THE VEHICLE....C/50
CATALYTIC PURIFIER (OPTIONAL)....C/53
WATER DRIVEN PURIFIER (OPTIONAL)....C/53

Courtesy of Crane.Market

https://truckmanualshub.com/

CHAPTER “C”
USER INSTRUCTIONS AND GETTING TO KNOW THE VEHICLE
“CENTRAL DASHBOARD” - INTEGRATED DEVICES

LCD DISPLAY C/57
SPEEDOMETER (OPTIONAL) C/57
HODOGRAPH (OPTIONAL) C/57
BUTTONS C/58
CHANGING DISPLAY VISUALISATION C/58
CLOCK REGULATION C/58
DASHBOARD INSTRUMENT INITIAL CHECK C/59
ANTI-TIPPING SYSTEM TEST C/60
GENERAL ALARM LED C/61
ENGINE ERROR C/61
SWITCH-ON OF DASHBOARD INDICATOR LIGHTS C/61
ENGINE OVERREVVING C/61
ENGINE ERRORS C/62
ERRORS MENU C/62
SERVICE C/64
ERRORS LIST C/65
ANTI-TIPPING DEVICE ERRORS C/68

CHAPTER “D”
MAINTENANCE AND REGISTRATION

MAINTENANCE PRESCRIPTIONS D/3
INTRODUCTION D/3
DECLARATION OF VIBRATORY EMISSIONS D/5
DECLARATION OF FIRST INSPECTION BY MANUFACTURER D/5
IDENTIFYING THE VEHICLE PARTS D/6
MAINTENANCE AND REGISTRATION SCHEDULE D/8
CAPACITY OF PARTS TO LUBRICATE D/12
COMPARATIVE OIL TABLE D/12
OPENING THE ENGINE BONNET D/13
ENGINE D/13
PEDALS D/14
HYDROSTATIC ENGINE "INCHING" CONTROL D/14
PARKING BRAKE D/15
HYDRAULIC OIL LEVEL D/16
CHANGING HYDRAULIC OIL AND REPLACING FILTERS D/17
HYDROSTATIC OIL FILTER D/18
FUEL TANK D/19
RADIATOR WATER / OIL / INTERCOOLER D/20
AIR FILTER D/22
CAB VENTILATION FILTER REPLACEMENT D/24
AIR CONDITIONING (OPTIONAL) D/25
CYLINDER BLOCK VALVES D/26
REDUCERS AND DIFFERENTIAL AXLES D/28
FRONT/REAR DIFFERENTIAL AXLES D/28
BOOM SLIDING BLOCKS D/32
GREASING NIPPLES D/34
BATTERY ISOLATOR SWITCH D/36
FUSES D/37
LIGHTING D/38
FRONT LIGHT D/38
REAR LIGHT D/39
WORKING LIGHT D/39
DUAL REFLECTOR WORKING LIGHT D/39
PRELOAD AND TORQUE TABLE FOR CLASS 1 NUTS AND BOLTS D/40
PRELOAD AND TORQUE TABLE FOR CLASS 2 NUTS AND BOLTS D/41
TORQUE TABLES REGARDING THE HYDRAULIC FITTINGS D/42
TROUBLESHOOTING D/43
HOW TO WRITE OUT THE SERVICE REGISTER D/46
COMMITMENTS AND HOW TO FORWARD DECLARATIONS TO I.S.P.E.S.L. D/46
PERIODIC INSPECTIONS AND METHOD OF REGISTRATION D/46
MACHINE DETAILS D/47
RECORD OF SCHEDULED INSPECTIONS AND MAINTENANCE WORK D/49

Courtesy of Crane.Market

https://truckmanualshub.com/

CHAPTER "E"
ELECTRICAL DIAGRAMS AND CIRCUITS

CHAPTER "F"
HYDRAULIC SYSTEM

CHAPTER "G"
TECHNICAL SHEETS

Courtesy of Crane.Market

Dear customer,

Thank you for choosing a DIECI.

This Use and Maintenance Manual has been written to help you fully appreciate your vehicle.

We strongly recommend that you read this manual in its entirety before using the vehicle.

It contains information, advice and important warnings that will help you to fully take advantage of the technical capabilities of the DIECI.

You will learn about its features and special practical information in addition to information about its maintenance, driver and operation safety to help maintain your vehicle overtime DIECI.

We are confident that you will be happy with your new vehicle and we remain at your disposal should you have any further queries.

Sincerely.

Sales Management

Courtesy of Crane.Market

https://truckmanualshub.com/

Courtesy of Crane.Market

https://truckmanualshub.com/

INTRODUCTION
GUARANTEE
VEHICLE IDENTIFICATION

A

Courtesy of Crane.Market

https://truckmanualshub.com/

BEFORE COMMISSIONING THE VEHICLE, THE OPERATOR MUST THOROUGHLY READ THIS MANUAL IN ORDER TO COMPLETELY UNDERSTAND FUNCTIONING OF THE TELESCOPIC LIFT AND BE SUITABLY PREPARED FOR ITS USE.

USE OF THE VEHICLE DIFFERENT TO THAT DESCRIBED IN THIS MANUAL IS PROHIBITED AND RELIEVES *DIECI* FROM ANY LIABILITY FOR INJURY/DAMAGE CAUSED TO PERSONS, ANIMALS AND OBJECTS.

WHEN USING THIS MACHINE, CAREFULLY FOLLOW DIAGRAMS CORRESPONDING TO MOUNTED ATTACHMENTS.

Courtesy of Crane.Market

https://truckmanualshub.com/

INTRODUCTION

The purpose of this manual is to provide the Operator with efficient and safe instructions on the use and maintenance of the telescopic lift.

Following these instructions carefully will allow you to obtain, full efficiency and a long working life from your vehicle, and will help to make your work considerably easier.

This Use and Maintenance manual is provided by the Dealer upon delivery of the vehicle, in order to make sure that these instructions are read and correctly understood. Should you have trouble understanding any part of this manual, do not hesitate to contact your nearest Dealer for clarification, as it is of utmost importance that the operation and maintenance guidelines be fully understood and carefully observed. Routine maintenance should be carried out regularly, keeping a record of the vehicle's working hours.

Use only original spare parts when spare parts are required. Local Dealers can supply original spare parts as well as advice and instructions for their installation and use. The use of non-original spare parts may cause damage to other parts of the vehicle. Customers are advised to purchase all spare parts required only from an authorised Agent or Dealer.

Should the vehicle be destined for use in particularly severe conditions (for example on argillaceous or muddy terrain), we advise consulting your nearest dealer for specific instructions. Failure to observe these instructions may result in the vehicle's guarantee being voided.

This manual has been published for worldwide distribution and the availability of certain equipment referred to as being essential or available on request may vary according to the geographical location in which the vehicle is being used. All details about the equipment available in your area can be obtained from your nearest Distributor or Dealer.

Due to manufacturing demands, machines of the standard production range may differ slightly from those mentioned in this manual. The company reserves the right to make modifications without prior notice.

As a result of continuous technical improvements introduced, as well as updating and publication timetables, the data included in this manual may be subject to change at any time and should not be considered binding.

In some illustrations, the panels or covers have been removed in order to make the figure clearer. Never use the vehicle without these panels or protective coverings.

The left and right positions indicated in this manual refer to the vehicle as viewed from its back looking towards the front, or rather, the view of the operator when sitting in the driver's seat.

LEFT SIDE

RIGHT SIDE

FRONT VIEW

VIEW FROM ABOVE

Courtesy of Crane.Market

https://truckmanualshub.com/

GUARANTEE

GUARANTEE: DURATION, VALIDITY AND ACTIVATION

Warranty: duration

DIECI s.r.l. (hereinafter referred to as ***DIECI***), guarantees its products for 12 months from the date of delivery to the Client.

Warranty: entry into force

The guarantee is valid from the date of the vehicle's shipment from manufacturer's factory (in sales to distributors or dealers). When delivery is handled by the distributor or dealer, ***DIECI*** reserves the right to verify that the warranty start date corresponds to the shipping or delivery date on the transport document for the product being guaranteed, and/or to the invoice date and reserves the right to request original copies of these documents.

Warranty: activation

The guarantee is automatically valid from the date the vehicle leaves the manufacturer's factory (in sales to distributors or dealers).

GUARANTEE: VALIDITY

Guarantee in countries with assistance centres

- The guarantee covers the replacement or repair of faulty parts proven defective as a result of the material used, its manufacturing or assembly.
- ***DIECI*** reserves the sole right to authorise the repair or replacement of defective parts.
- ***DIECI*** shall respond to claims using the means and methods it deems most appropriate.

DIECI is responsible for:
- The materials used
- Labour
- Travel expenses.

The customer is responsible for:
- Packing and shipping costs for spare parts.
- All other expenses not listed under those for which ***DIECI*** is liable.

Warranty in countries without assistance centres

- Refers exclusively to the free supply, paid for by ***DIECI***, of parts no longer usable due to faulty material, manufacturing and/or assembly.

Examining replaced faulty parts

- Before honouring the guarantee, ***DIECI*** may ask that the faulty parts replaced during repair work, be returned at ***DIECI***'s expense.

Additional guarantee for repairs and replacement parts

- Repairs made under guarantee or not, and parts replaced during repair work, are guaranteed for 3 months from the date of repair or installation, even if the original guarantee has expired.

Intervention campaigns for faulty products

- The replacement procedures of parts recognised as faulty will be agreed between ***DIECI*** and its distributors/dealers/authorised workshops.
  These intervention campaigns can be followed directly by ***DIECI*** suppliers, responsible for supplying the components to be replaced (interventions authorised by ***DIECI***).
  The above interventions will be preceded by written communication by ***DIECI*** to its purchasers.
  Only ***DIECI*** can decide the interventions methods (repair, replacement, modification).

Courtesy of Crane.Market

https://truckmanualshub.com/

WARRANTY:
REQUEST FOR REPAIR UNDER GUARANTEE

Warranty: making a claim

- The claim of the defective part must be made by the Customer, dealer, distributor or authorised repair shop and must be sent directly to ***DIECI's*** customer assistance office within 8 days of the first manifestation of the defect. The claim must include a clear description of the defect and precise references to the vehicle (type, model and serial number). This information can be found on the vehicle in the places indicated in the USE AND MAINTENANCE MANUAL.

Obligation to immobilise vehicle

- If there is a risk that the defect may jeopardise safety and accident prevention or may cause further damage, the vehicle must not be used until it has been repaired and tested.

Warranty: exclusions from the warranty

The following conditions and parts are excluded from the guarantee:

- Components subject to wear and tear or deterioration due to prolonged use: clutch, belts, brake pads, sliding blocks, rollers, oils and liquids, filters etc.
- Electrical circuits and components,
- Damage caused by climatic factors, natural disasters, acts of vandalism, etc.
- Any other malfunction not due to a defect resulting from original fault or which does not fall under ***DIECI*** liability.

The following parts are also excluded from this guarantee but are covered by the guarantee of the Relevant Manufacturers:

- Diesel engines
- Axles and reduction gears
- Hydraulic pumps and engines
- Tyres

DIECI shall handle the application of the aforementioned guarantees.

Every modification made to the vehicle leads to a new verification of conformity with the 2006/42/EC Machinery Directive" This procedure is also valid in the case of repairs with non-original spare parts.

In the event of dispute, DIECI acknowledges the Court of Reggio Emilia - ITALY as the ultimate authority.

CAUSES OF:
NON-ACTIVATION, FAILURE TO HONOUR, TERMINATION

Warranty: failure to honour

The guarantee is not honoured:

- If the defect is not reported following the prescribed methods and within the established time limit.
- If the customer does not comply with ***DIECI's*** request to return the defective parts substituted during the repair intervention.
- If the customer has not complied with the obligation to stop using the machine after making a claim, limited to damages caused by non-compliance.

Warranty: termination

The guarantee is terminated:

- If the buyer does not fulfil contractual payment obligations.
- If damage has been caused by carelessness, negligence, or by use of the vehicle for purposes not in compliance with specifications provided in the use and maintenance manual (incorrect manoeuvres, overloading, use of incorrect fuel, poor maintenance*, disregard for warning indicator instruments etc.)
- If the defect is a result of applications, attachments, modifications or repair work not authorised by ***DIECI*** or carried out using poor quality parts. (For this reason, we recommend always using original spare parts).

* For "recommended regular routine maintenance" refer to the USE AND MAINTENANCE MANUAL.

Final terms

- In cases of the non-activation of the guarantee of if it is not honoured or is terminated, the buyer shall not be granted annulment of the contract, payment of damages, or an extension of the guarantee.

- ***DIECI*** does not make payments for any type of debit which replacement machines or for rental, labour and lost profits, caused by machine stop. Unless otherwise previously agreed in writing by both parties.

- Conditions subject to guarantee different than those listed above must be agreed upon in writing and signed by both parties.

Spare parts supply

- ***DIECI*** guarantees the supply of original spare parts or alternatives for 10 years starting from the date the last model of the series of interest is manufactured.

Courtesy of Crane.Market

https://truckmanualshub.com/

VEHICLE IDENTIFICATION

VEHICLE MODELS

This vehicle has been designed and constructed for use as a self-propelled vehicle, including an operator's driving seat, with tyres, intended for use on asphalt or natural surfaces and on rough ground. The vehicle consists of a main support structure aimed at supporting the extendible arm. Forks or other attachments approved by ***DIECI*** can be mounted on the boom head. In used normally, the vehicle lifts and places down loads through the extension/withdrawal and raising/lowering of the boom.

The Manufacturer offers a range of similar vehicles that have different technical features and capacities.

When consulting any Table or illustration provided in this manual or on the vehicle itself, always refer to the model code.

Apollo TELESCOPIC LIFTS

LIABILITY

- The machines are manufactured in compliance with EC directives in force during the period of commercialisation.

- Failure to observe the user and safety regulations or use of the vehicle in less than perfect working condition may cause accidents that are punishable by law.

- The Manufacturer is not liable for injury or damage to people, things or animals caused by improper use of this vehicle or by unauthorised structural modification, applications and transformation.

- The Manufacturer reserves the right to carry out possible modifications to the vehicle for technical or commercial reasons without prior notice.

Courtesy of Crane.Market

https://truckmanualshub.com/

TELESCOPIC LIFT IDENTIFICATION

The vehicle can be identified by the serial number punch-marked on the front part of the chassis and inside the cab. In addition, the engine also has its own serial number punch-marked on the engine block.

To ensure prompt and efficient service when ordering spare parts or when requesting information or technical explanations, always provide the serial numbers of the engine and chassis.

Chassis serial number .....

Engine serial number .....

Cab serial number .....

Type of vehicle .....

Owner/ Operator .....

Address of Dealer or agent.....

.....

Delivery date .....

Warranty expiry date .....

NOTE:
Apollo lifts bear the stamping (type-approval code) (see first 4 numbers stamped on the chassis).

Engine serial number

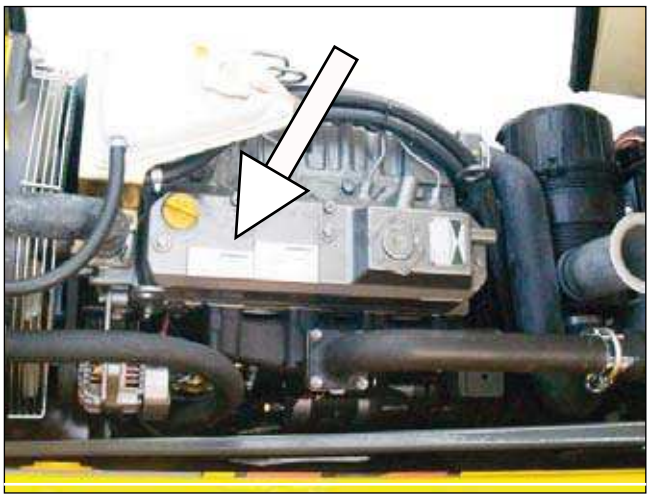

Chassis type and serial number

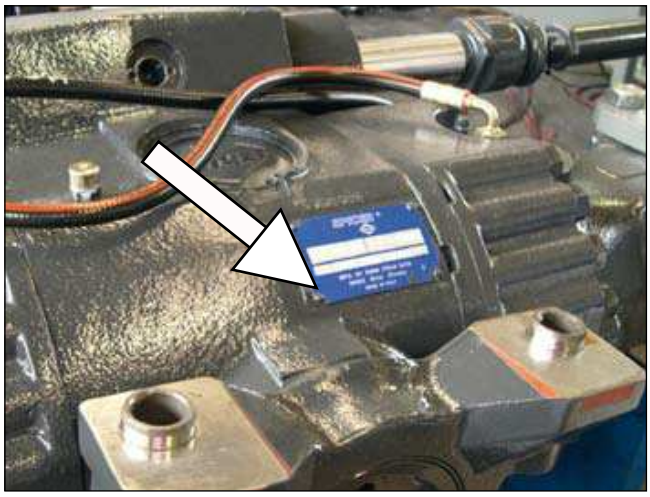

Axle serial numbers

Essential data

Courtesy of Crane.Market

https://truckmanualshub.com/

Courtesy of Crane.Market

https://truckmanualshub.com/

DECLARATION OF CONFORMITY

Below is a FAC-SIMILE of the declaration of conformity:

DECLARATION OF CONFORMITY

CE

(Machinery Directive 2006/42/EC, Annex II, part A)

Manufacturer : DIECI SRL
Address : Via E. Majorana, 2-4- 42027 Montecchio Emilia (RE), Italy

Name and address of the person authorised to compile the technical file: MR. ENNIO MANGHI, DIECI SRL- Via E. Majorana, 2-4 - 42027 Montecchio Emilia (RE), Italy

Declares that:

The L** xxx-type Telescopic Lift (xxxxxxxxx) Serial Number ***$_{xxx}$****

complies with all relevant dispositions of the following European Directives:

Machinery Directive - **2006/42/EC**
Electromagnetic Compatibility Directive – **2004/108/EC**
Directive on the environmental noise emission of machines – **2000/14/EC**

Assessment of conformity P referred to in Annex VI, carried out by the following Notified Body:
n. 1232, REGGIOEMILIA INNOVAZIONE S.c.a r.l. - Via Sicilia, 31- 42122 Reggio Emilia
Net power installed (kW): 74 kW
Measured sound power level: L_{WAm} = 101 dB $_{(A)}$
Guaranteed sound power level: L_{WA} = 103 dB $_{(A)}$.

and, among others, the following harmonised European Standards:
UNI EN ISO 12100:2010
Safety of the machinery, General design principles, Risk evaluation and reduction
UNI EN 982:2009
Safety of the machinery - Safety requisites regarding systems and their components for hydraulic and pneumatic transmissions - Hydraulics
CEIEN 60204-1:2006
Safety of the machinery. Electrical equipment of machines.
UNI EN 1459:2010
Safety of the industrial trolleys - Telescopic arm self-propelling trolleys
UNI EN ISO 3471:2008 (ROPS)
Ground moving machines - Protective structures against tilting - Laboratory tests and performance requisites
UNI EN ISO 3449:2009 (FOPS **II** Level)
Ground moving machines - Protective structures against the falling of objects - Laboratory tests and performance requisites
UNI EN ISO 13309:2010
Construction machines - Electromagnetic compatibility of machines with internal electric power supply
EN15000

The machine is equipped with the following accessories:
BUD 10** - Pair of forks
****

A plate bearing the CE marking is applied to the machine.

Montecchio Emilia, **/**/xxxx

DIECI SRL
Via E. Majorana, 2-4
Montecchio Emilia (RE)
An Administrator
Ennio Manghi

FAC-SIMILE

Courtesy of Crane.Market

https://truckmanualshub.com/

Courtesy of Crane.Market

https://truckmanualshub.com/

SAFETY REGULATIONS

B

Courtesy of Crane.Market

https://truckmanualshub.com/

ACKNOWLEDGING SAFETY REGULATIONS

This is the **"POTENTIAL HAZARD WARNING" SYMBOL.**

Wherever this symbol "⚠" appears, on the vehicle or in this manual, you must take care against potential damage or injury to the vehicle, other equipment, or people. Follow all recommended precautions and observe regulations for safe use and maintenance.

UNDERSTANDING WARNING NOTICES

In this manual certain terms are used to indicate different level of risk, including:

- DANGER -

Indicates a situation of potential danger for the vehicle's operator or other people directly involved in its operation.

- ATTENTION -

Indicates a situation of imminent danger which, if not averted, may cause damage to the vehicle and to the safety of the operator or others directly involved.

- WARNING -

Indicates a situation of imminent danger which, if not averted, may cause damage to the vehicle.

- PROHIBITION -

Indicates strictly prohibited actions or things that are dangerous to personnel

The above-mentioned words are always accompanied by the corresponding potential hazard warning symbol.

- NOTE -

Indicates an additional explanation for a given piece of information.

Carefully read the safety regulations given and follow all recommended precautions in order to avoid potential risks and safeguard your health and safety.

The "potential hazard" symbol and the "warning notices" have been included to highlight situations that ***DIECI*** feels are of particular importance.
However, the manual must be read and learned in full and must be kept inside the vehicle, in a covered and protected place.

If in doubt, contact the nearest agent or dealer.

Courtesy of Crane.Market

https://truckmanualshub.com/

GENERAL WARNINGS

Use of the vehicle for purposes different than those described in this manual is strictly forbidden. All functions and procedures concerning the operation and mounting of the vehicle's attachments that are not described in this manual are strictly forbidden.

If the vehicle is used for purposes different than those for which it was designed, *DIECI* cannot be held responsible for damage to things, the vehicle itself, or for injury to persons caused by such improper use.

The User's Manual and the parts catalogue are an integral part of the vehicle and must remain with it even when it is sold to a new owner. The manual, in the user's language, must be carefully stored aboard the vehicle at all times for quick reference. If the manual becomes creased, damaged or can no longer be easily read, it must be replaced immediately.

The instructions for use, maintenance and repair in this handbook must be followed if the vehicle is to be considered as being operated in accordance with the manufacturer's intended uses.

This vehicle must be used, assisted or repaired only by adequately informed, trained and educated personnel on the use of the mean and on the safety regulations to be observed.

The persons authorised to use and maintain the vehicle are:

USE OPERATOR: person trained and educated through appropriate theoretical-practical course specific for using such equipment;

GENERAL SERVICE TECHNICIAN: person trained and educated to carry out routine maintenance interventions with basic mechanical, electrical and hydraulic knowledge;

SPECIALISED SERVICE TECHNICIAN: person trained and educated to carry out routine and extraordinary maintenance interventions with in-depth and specific mechanical, electrical and hydraulic knowledge, usually appointed or authorised by ***DIECI*** or dealer.

All procedures and maintenance operations not described in this manual are strictly forbidden.
All the repairs and maintenance work must be performed in authorised repair centres.

The user must always observe the general safety regulations as well as those for accident prevention, such as traffic rules if the vehicle is used on public roads.

Any arbitrary modification made to the vehicle will absolve *DIECI* from all liability FOR DAMAGE or injury resulting from such modification.

DIECI is not liable for damage caused by negligent use of this vehicle even if said damage is not a result of intentional improper use of the vehicle.

Everything possible has been done during the design and construction phases of this vehicle to make your job as safe as possible. Due caution, however, is indispensable and there is no better rule to prevent accidents.

DIECI is not liable for damage resulting from operations performed instinctively, as a reflex, while in a state panic, or in the event of malfunctioning, accidents, etc. during use of the vehicle.

DIECI is not liable for behaviour foreseeable on the part of certain categories of people, including: apprentices, adolescents, disabled persons, personnel in training.

***DIECI* vehicles cannot be used for betting, competitions or personal use.**

Read all of the safety stickers on the vehicle and observe all regulations printed on these stickers before starting up, running or refuelling the vehicle or before carrying out maintenance work.
Clean the stickers if they are covered by dirt, cement or other deposits. Do not remove these stickers for any reason. Promptly replace any stickers which may be damaged, lost or illegible.

To guarantee your safety and that of others, do not modify the structure or adjust the various vehicle components (Hydraulic pressure, calibration of load limiters, engine rotation, assembly of additional attachments, etc.).
The same holds true for the deactivation or modification of safety systems. In such cases, the manufacturer shall be absolved from all liability.

Periodic inspections must be carried out in order to maintain the vehicle's "compliance status", as reported in the dedicated area of this Use and maintenance manual.

Take all necessary safety precautions to prevent potential risks when carrying out operations or procedures that are not explicitly recommended or allowed for in this manual.

Do not carry out or engage in operations or actions expressly prohibited in this manual.

If in doubt, contact the nearest agent or dealer.

Courtesy of Crane.Market

https://truckmanualshub.com/

PROTECTIVE CLOTHING

- Always wear clothing appropriate for the work that must be carried out. Do not wear loose clothing, ties, chains, belts or other accessories that may become caught in the control lever or in other parts of the vehicle.
- Do not wear jewellery or any other metal accessories as they could cause injury if caught in the vehicle or if an electric current passes through the body.
- Operators with long hair must tie it back and be careful to not to catch it in the vehicle.
- Depending on the type of work or construction site, operators must choose and wear clothing appropriate for protecting them from injury.

- DANGER -

Before operating the vehicle, it is the operator's responsibility, to ask the construction site manager about the possible risks of the work and the accident prevention clothing that must be worn.

- ATTENTION -

The following must always be available to the operator:

- **Protective helmet**
- **Accident-prevention shoes**
- **Protective goggles or protective face mask**
- **Protective gloves**
- **Protective headwear against noise (ear protectors)**
- **Reflective clothing**
- **Waterproof clothing**
- **Breathing apparatus or filtering mask**

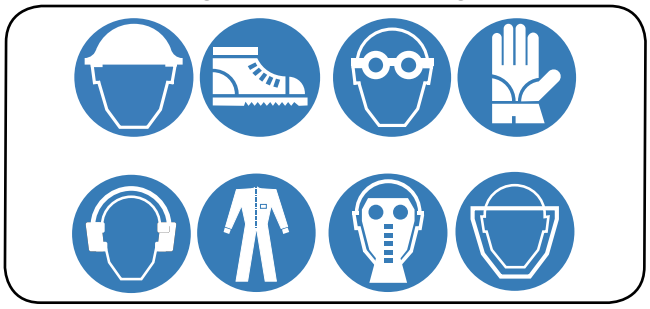

- Different Individual Protection Devices are used by the operators depending on the type of site and risks present in the work place. Always use the most suitable IPD to the type of work being carried out.
- Accident prevention clothing is to be considered personal gear: Do not wear the accident prevention clothing of other people.
- Accident prevention equipment must always be whole and in good condition. Damaged clothing cannot ensure adequate protection. Do not wear damaged clothing: always replace damaged or torn clothing before operating the vehicle.
- Always protect yourself against noise as prolonged exposure to loud noise can damage your hearing or may cause hearing loss. Always wear anti-noise headphones or earplugs to protect yourself from excessive and irritating noises.
- Headphones for listening to the radio or music should not be worn while using the vehicle. The operator must always be fully alert while operating the vehicle.

INSPECTING THE VEHICLE

- ATTENTION -

Inspect your vehicle every day or at the start of every shift, examining it carefully before beginning work.

- Make sure that the tyres are suitable to the type of ground present.

There are different types of tyres for sand, road, agricultural land, snow, etc. For additional information, contact your nearest agent or dealer.

- ATTENTION -

Users who detect any faults with their vehicle (noise, vibrations, unusual odours, instrument errors, smoke, oil leaks, etc.) or establish that the vehicle does not respond to safety regulations must suspend use of the vehicle and immediately inform their safety manager.

- Operators are **PROHIBITED** from carrying out repair or adjustment work unless they have been trained to do so. Only the person charged to do so should carry out maintenance work on the vehicle.

- ATTENTION -

Before beginning operation, ensure the vehicle is in good working order for maximum efficiency in compliance with all safety regulations.

- Consult the maintenance chapter of this manual to carry out the checks listed below.
- Carry out the following checks to verify the proper working order of the functions listed below:
  - Efficiency of parking brakes.
  - Engine oil level (check and top up if necessary).
  - Hydraulic oil level (check and top up if necessary)
  - Air filter clogging indicator (check and clean if necessary)
  - Tyre condition and pressure (check).
  - Fuel level (check).
  - Signalling and warning devices (check).
  - Steering efficiency.
  - Service brake efficiency.
  - Ensure that all nuts and bolts are tight.
  - Lighting
  - Direction indicators
  - Emergency lights.
  - Switches.
  - Indicator lights.
  - Windscreen wipers.
  - Reverse motion alarm.

If the vehicle is not used for six months, it should be checked thoroughly before use. The operations are detailed at pages B/22.

Courtesy of Crane.Market

https://truckmanualshub.com/

Ensuring the vehicle is clean

- Clean the windows, lights and rear-view mirrors.
- Remove all mud and dirt deposits.
- Clear away any rubbish and dirt from inside the cab, particularly from the pedals and controls.
- Clean the engine, articulated joints and radiator.
- Remove any excess grease.
- Make sure the cab steps and the handle are clean and dry.
- Clean all safety stickers and manoeuvring instructions. Replace any stickers that are illegible or missing.

Checking for damage

- Make sure there are no damaged or missing parts
- Make sure all articulated pins are properly fastened.
- Make sure there are no signs of possible cracks or flaws or other damage to the windows.
- Make sure there are no oil, fuel or cooling liquid leaks underneath the vehicle.
- Make sure the wheel bolts are properly tightened.
- Check all safety devices.
- Ensure that the ROPS/FOPS structure is not damaged.
- Make sure that the seat belt and relevant attachments are not damaged or extremely worn.

- ATTENTION -

Whenever abnormalities are detected, repair them as soon as possible, contacting an Authorised Service Centre of the Manufacturer.

- PROHIBITION -

IF THE VEHICLE IS NOT IN PERFECT WORKING ORDER ITS OPERATION IS STRICTLY PROHIBITED.

Adjustments

- Adjust the seat and steering wheel so that the operator can comfortably reach all the driving controls.
- Adjust the rear view mirror/s so that when sitting in the driver's cab, the rear of the vehicle can be clearly seen

PREPARATION FOR EMERGENCIES

- Always be prepared in the event of a fire or an accident.

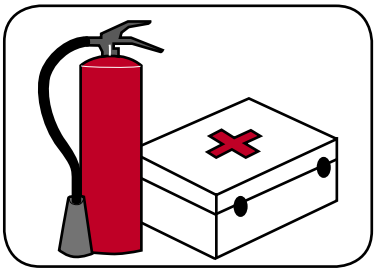

- ATTENTION -

Keep a fire extinguisher and first aid kit and (not supplied by the manufacturer) close at hand at all times.

- Carry out periodic inspections to ensure that the first aid kit contains all necessary items; replenish contents if necessary.
- To properly use the extinguisher, carefully read the instructions located on the extinguisher.
- Carry out periodic inspections and maintenance (six-monthly) to ensure that the extinguisher is ready for use at any given moment.
- Create a table of priorities with the manager responsible for safety in order to best deal with potential fires or accidents.
- Keep emergency telephone numbers (doctors, ambulance, hospital and fire brigade) clearly visible and near the telephone.
- Personnel adequately trained and educated for managing emergencies through appropriate theoretical-practical course must be present on site/in the work place.

Courtesy of Crane.Market

https://truckmanualshub.com/

FIRST AID

Below are a few standard procedures for First aid that can be activated in case of accident occurred following use of the vehicle or of the individual equipment and accessories that are used.

Can be useful for the operators during emergency situations during vehicle use in the various life phases of the same (transport, installation, use, maintenance, adjustment, etc.) or that rush to help the other operators near-by.

First-Aider Tasks
- activate first aid (emergency call);
- check the victim and, if necessary, support its vital functions;
- stop external bleeding;
- protect wounds and burns;
- protect the victim from further injuries;
- do not perform useless or damaging actions, which administering drinks, moving the victim, reducing dislocations and/or fractures, etc.

Emergency call
The good result of an emergency intervention also depends on how quickly 118 (Italian emergency medical support) manages to reach the place of the event.

This is why the first-aider in charge of calling the emergency must precisely indicate;
- the address of where the accident or illness took place;
- the number of injured or ill parties;
- the possible cause of the event;
- the state of the vital functions of the injured party, specifying whether the same is conscious or not and if breathing normally or not.

It is always opportune to also give:
- own details, a telephone number where to be contacted;
- await the aiders in an easily visible place.

Traumas
Distortion, dislocations and fractures treatment:
it is necessary to block the articulation in the position it is in after the trauma, using bandages or other, supporting the analgesic position of the injured party, without attempting dangerous manoeuvres. Apply ice (with ice bag or other means).

Contusions, crushing:
in case of contusions and/or crushing to upper and lower limbs (fingers, hand, feet, etc.) immediately place the limb under cold running water and place ice on it, also checking for wounds and/or cuts. If so, disinfect the affected area.

Haemorrhage

It is necessary to directly press on the injured part with sterile gauze pad, lift the limb and eventually compress the injured part upstream, using tourniquet.

Treating superficial wounds:
expose and accurately clean the wound by washing it, disinfect it with physiological solution, cover it with sterile gauze; proceeding with bandaging the wounded area, avoiding tightening the bandage excessively to enable good blood flow.

Treating deep wounds:
it is a priority to protect one self against the risk of contamination using gloves and face mask; staunch the bleeding until it stops, or until the ambulance arrives, by directly pressing or using other pressure points; call 118 informing them you are staunching an arterial bleeding.
Only after bleeding is under control, treat the wound.

- ATTENTION -

When disinfecting the wound DO NOT use cotton wool, denaturated alcohol, antibiotic powder.

Courtesy of Crane.Market

https://truckmanualshub.com/

DRIVER'S CAB

- Use available footsteps and handles to reach the driver's seat

- Always face the vehicle when getting in or out of it, maintain contact with the vehicle in three points at all times, using the handles and steps provided.
- Never use controls for purposes different than those for which they were created for (Ex.: Getting on or off the vehicle, hanging clothing, etc.)
- Never jump down from the vehicle.
- Never get on or off a moving vehicle.
- Never jump on or off the vehicle.
- If the vehicle begins to move without an operator inside the cab, do not jump on the vehicle to try to stop it.
- Never get on or off the vehicle while holding equipment.
- Always keep footboards, steps and handles clean and make sure they are not slippery.
- Do not put any suction cups on the windows. Suction cups act as lenses and can cause fires.
- Do not use cell phones in the operator's cab during vehicle operation.
- Never bring dangerous items such as inflammable or explosive objects, in the driving cab.

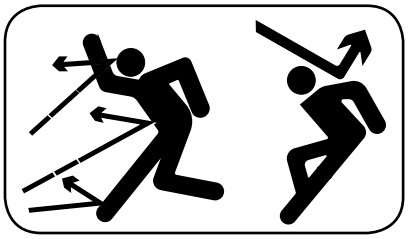

- When working in areas where there is a risk of falling, bouncing or interference from objects capable of hitting the operator or entering the cab, mount suitable safety panels to protect the operator. Always close windows. Always ensure that bystanders are at a safe distance and cannot be hit by bouncing or falling objects.
- If the cab window on the telescopic boom side should beak, risk of contact between the operator and the boom exists. Immediately stop operation and replace glass.

- PROHIBITION -

IT IS FORBIDDEN to operate the vehicle with arms, legs or any body part out of the driver's seat.

- ATTENTION -

Only use the vehicle if the seat is correctly adjusted. A poorly adjusted seat can cause the driver to tire quickly and, thus, may lead to incorrect operation. It may also alter perception of external objects from the driver's seat and can compromise the proper execution of manoeuvres.

- The seat should be adjusted according to the height and weight of the driver.
- The driver should be able to fully press down the pedals and operate all control levers while resting his/her back fully up against the seat back.

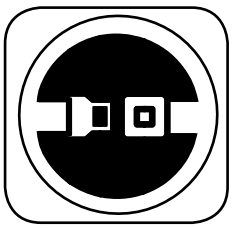

- DANGER -

Always fasten seat belts correctly before beginning operation.

- The seat belt has been fastened properly when it is sits snugly around the body.

- DANGER -

The vehicle is equipped with a cab that is able to support the weight of the vehicle itself should it tip over (ROPS). It is therefore, essential that the driver remains firmly fastened in the seat thanks to the seat-belt to prevent him/her from falling out of the cabin and possibly getting crushed.

- Before starting up the vehicle, carefully check the belt, the buckle and the fasteners of the structure. If any part shows sign of damage or wear and tear, replace the seat belt or component part before using the vehicle.
- Remain seated with seat belt properly fastened whenever using the vehicle in order to reduce the risk of injury in case of an accident.
- Following an accident, check the safety belts and the attachment points to frame are intact. If damaged, immediately replace.

- DANGER -

Do not carry passengers on your vehicle.

- DANGER -

The operator must always maintain a normal driving position.

Courtesy of Crane.Market

https://truckmanualshub.com/

DRIVING AUTHORISATIONS

- ATTENTION -

Follow the laws relevant to the country where the vehicle is being used.

- ATTENTION -

Only qualified and properly trained personnel can use the vehicle.

Depending on type of accessory used (Shovel, Forks, Basket, Hook), the operator must attend appropriate theoretical-practical course where, at least, the following subjects are dealt with:

Shovel Accessory:
Course for driving machines and earth handling personnel
Program:
- main risks linked to using the driving machine
- structural and operational features, technical and control components, safety devices, technical documentation
- checks and verifications
- pre-arrangement for eventual circulation/transport on road and specific behavioural Standards
- safe techniques for excavation, materials and earth handling, small demolitions
- Accessories, tooling operations
- IPD and safety signals
- practical test

Forks Accessory:
Course for personnel using the vehicles for handling and transporting materials
Program:
- main risks linked to using the vehicle with the specific accessory
- structural and operational features, technical and control components, safety devices, technical documentation
- checks and verifications
- pre-arrangement for eventual circulation/transport on road and specific behavioural Standards
- safe techniques for materials handling, loading and unloading
- safety arrangement and load stability
- accessories, tooling operations
- IPD and safety signals
- practical test

Basket Accessory:
Course for personnel using the elevation mobile work platforms (PLE)
Program:
- Standard of reference
- safe operating and use of the platform
- emergency descent procedures
- periodical checks and verifications
- routine and extraordinary maintenance
- IPD III cat. and safety signals
- practical test

Hook Accessory:
Course for personnel on using the crane, including lifting equipment and accessories
Program:
- Standard of reference regarding safety at work and crane specification
- verification crane conformity and minimum requisites
- specific risks for the operators and risks deriving from the presence of suspended loads
- checks and verifications
- routine and extraordinary maintenance
- IPD and safety signals
- practical test

- ATTENTION -

Use of the vehicle is subject to driving authorisation/ enabling issued by the facility/construction site manager where the vehicle is to be used.

- Users must always keep his/her driving authorisation on hand during vehicle use.
- Operators cannot authorise other people to drive the vehicle.

Courtesy of Crane.Market

https://truckmanualshub.com/

STARTING UP THE VEHICLE

- Regardless of their level of driving experience, operators must familiarise themselves with the position and function of all controls and instruments before operating the machine.
- Do not use the vehicle when hands or shoes are wet or dirty with grease or greasy substances.

- DANGER -

Before starting the engine, make sure all control levers are in a neutral position, the parking brake is engaged, the engine bonnet is closed and that there is nobody in the area surrounding the vehicle.

- DANGER -

The vehicle can be started up or manoeuvred only when the operator is seated in the driver's seat, with the seat belt fastened and properly adjusted.

- DANGER -

Before using the vehicle verify all safety devices are functional.

The operator must always maintain control of the vehicle.

- Use the acoustic warning device or other signals to alert people in the area before starting up the vehicle.
- The vehicle may move suddenly if started up without following the correct procedure, thus, creating the risk of damage personal injury.

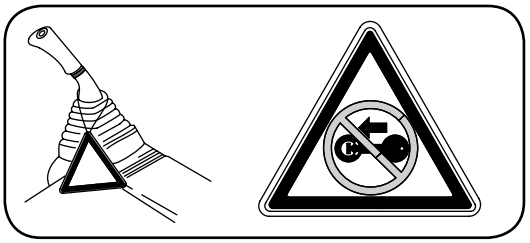

- Do not start the engine or touch the levers if there is a danger sticker posted inside the cab.
- Never start the engine by causing short circuiting between the terminals on the starter.
- Be careful when using auxiliary batteries as the gas contained in these may explode, causing serious damage.
- To start the engine using auxiliary batteries, follow the instructions provided in the paragraph "START UP USING AUXILIARY BATTERIES". Incorrect procedure may cause serious damage to the electrical/electronic system, the vehicle to move suddenly, the battery to burst, and damage to objects and/or people.

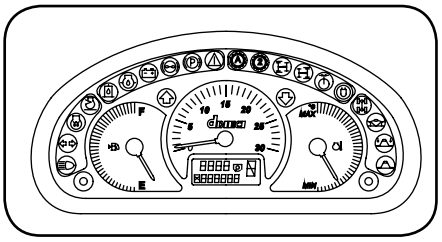

- Inspect control instruments immediately after start up, while the engine is hot and at regular intervals during use, in order to promptly recognise and resolve any malfunctions.

ENVIRONMENTAL CONDITIONS

Despite the vehicle being used in the most different situations, it is necessary to observe, in advance, the compliance with the minimal operational Standards, as reported below:

Parameter	Admitted values
Working temperature	from -5°C to +40°C
Average daily temperature	<40°C
Storage temperature	from -15°C to +50°C
Humidity	from 20 to 95%
Altitude	<2500m

Courtesy of Crane.Market

https://truckmanualshub.com/

SAFE OPERATION

- DANGER -

DO NOT USE THE VEHICLE IF YOU ARE UNDER THE EFFECT OF ALCOHOL, DRUGS OR IF YOU HAVE TAKEN MEDICINES THAT MAY MAKE YOU DROWSY OR MAY ALTER YOUR REFLEX AND REACTION TIME.

- DANGER -

DO NOT CARRY PASSENGERS ON THE VEHICLE OR IN THE DRIVER'S CAB OR ON ANY OTHER PART OF THE TELEHANDLER OR ON ANY OTHER MOUNTED ATTACHMENTS EXCEPT ON THE PASSENGER CONVEYING BASKET.

- DANGER -

CHECK THE CORRECT POSITION OF THE REAR VIEW MIRRORS.

- ATTENTION -

THE PERCEPTION OF OBJECTS' POSITIONS THROUGH THE REAR VIEW MIRRORS MAY NOT BE EXACTLY AS THEY ARE; THEY MAY SEEM FURTHER AWAY OR NEARER THAN THEY ARE IN REALITY. DESPITE THE USE OF REAR VIEW MIRRORS, BLIND SPOTS MAY BE PRESENT AND THE OPERATOR MAY NOT ABLE TO SEE CERTAIN POINTS WELL. ALWAYS WORK WITH MAXIMUM CARE.

- While the vehicle is running, always keep light signals on. These serve to warn people that the vehicle is about to move.
- Inspect the work zone before beginning operation.
- Inspect the ground and the conditions of the land at the work site; ensure safe conditions before operating the vehicle. Do not use in places at risk for landslides or rock falling.
- Take due precautions to prevent that any unauthorised persons from entering the working area.
- When moving through or operating in shallow water or soft ground, verify the shape and the conditions of the land, the depth and speed of water flow beginning operation.
- Do not drive with foot on the brake pedal or with the parking brake engaged.
- Continually evaluate the stopping distance required.
- Do not drive at high speeds.
- Always look in the forward direction and maintain good road visibility. Frequently use the side view mirrors and check their conditions, cleanliness and position regularly.
- Keep windows, mirrors and lights clean and in good condition.
- Verify that bonnets and the door are closed before beginning operation.

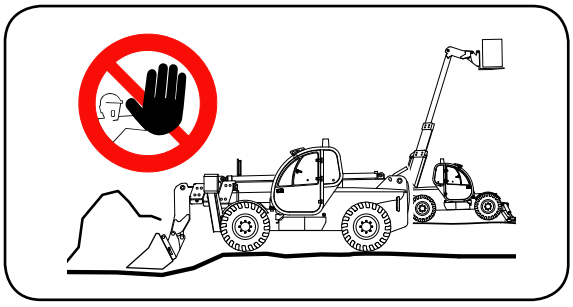

- When working in a congested area, always use the required signals; during operations that require the use of more than vehicle, use signals known by all personnel. Designate one person to signal and coordinate the work zone. Make sure that everyone follows the directions given by the person in charge of signalling.
- When working conditions require an operator on the ground, he/she must use hand signals in compliance with local regulations in the country of use of the vehicle.
- When working alongside excavations or on the edge of the road or soft ground: keep at a safe distance as they vehicle may overturn. Designate a person on the ground to be in charge of signalling.
  Remember that after strong rains, the use of explosives or an earthquake, the ground is more fragile.
- **Operation on steep sloping roads can cause overturning or sliding. Take proper precautions.**
- **Always move in a straight line to go up or down a slope. Moving crosswise or along the slope is extremely dangerous.**
- Drive slowly on grass, leaves or wet steel slabs. Even when operating on slight inclines the vehicle may slip, lose balance or overturn.
- When working on the upper part or inside buildings or other structures, ensure stability before beginning operations. The risk of collapse exists and can cause serious injuries or damage.
- Do not use the vehicle's force of impact to carry out tasks. These vehicles have not been designed for said use, therefore, such use may cause vehicle overturning, damage, the breakage of components and attachments, in addition to serious personal injury.

Courtesy of Crane.Market

https://truckmanualshub.com/

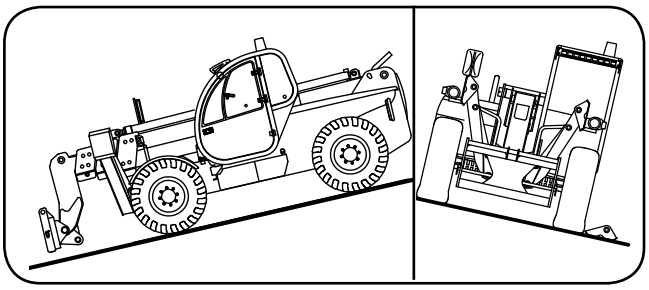

- Driving on side sloping roads may cause overturning or sliding. Take proper precautions.
- Do not leave the vehicle loaded on a slope exceeding 15%, even when the parking brake is engaged.
- Make sure the vehicle is level before lifting the boom when operating on sloping ground.
- When moving on longitudinal slopes:
  - Drive and brake delicately.
  - When moving without loads turn forks or attach ments downstream.
  - When moving with loads turn forks or attachments upstream.

- ATTENTION -

Snow can hide obstacles and objects, and cover holes dug-out areas and ditches. Proceed with caution when working in snowy conditions. Operation of the vehicle if the quantity of snow does not allow for clear distinction of obstacles and possible dangers along the path IS STRICTLY PROHIBITED.

- Take care when clearing snow and do not venture off the main road; that which is hidden at the sides of the road may cause vehicle overturning or damage to various components.
- Surfaces covered by snow or ice are extremely dangerous. Operate with caution, reducing vehicle speed as much as possible and engaging levers slowly.
- Operate with caution. If the vehicle should sink into the snow, it may overturn or remain buried. Do not venture from the road and avoid remaining entrapped or buried under heaps of snow.
- Extra care should be taken, when working on icy terrain. Should the temperature rise, the ice could melt and the ground could become slippery.
- Use caution in the presence of electrical cables, ditches, or freshly excavated or worked ground.
- Make sure not to cause risk to others in the area when backing up the vehicle.
- Always check the space around the vehicle before carrying out any manoeuvres.

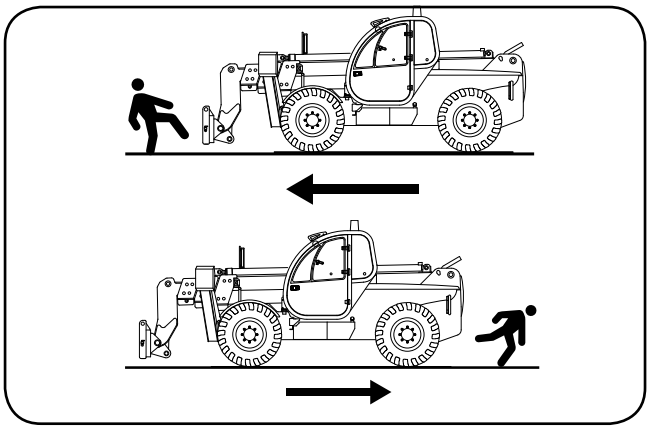

- Make sure there is no one in the vehicle's trajectory or in work zone.
- Designate someone on the ground to supervise manoeuvres if the operator's field of vision is obstructed. Always maintain visual contact with the person on the ground.

- ATTENTION -

Do not attempt to carry out operations which exceed vehicle's capability.

- ATTENTION -

Do not lift loads exceeding the capacity of the vehicle or accessories and do not increase the size any counterbalance regardless of the artifice utilised.

- Avoid obstacles.
- When lifting a load, ensure that nothing and no one hampers the movement and avoid false manoeuvres.
- Never leave the motor running when no operator is present.
- Never leave the key in the vehicle when it is unattended.

- ATTENTION -

Never leave the vehicle in the parked position with a load raised.

- Dust, rain, fog etc. may reduce visibility. If visibility is limited, reduce speed and use appropriate lighting.

Courtesy of Crane.Market

https://truckmanualshub.com/

- The vehicles are equipped with a special lighting system for transfers. If working at night or in a tunnel, adequate external lighting must be used.
- Do not lift, move or rotate the attachment above any person. If loads fall or bangs occur, damage may result.
- Do not authorise people to come near to or pass underneath a load.
- During operation in certain conditions, particles of material may be ejected. In such conditions, it is a good idea to wear protective goggles and clear the area of those people not in possession of such goggles.
- Pay careful attention to crumbling walls, landslides, falling material or objects that may break the cab window and hit the driver.
- Never operate the vehicle under an overhang as this could give way and fall onto the vehicle.
- Do not excessively weigh down the vehicle or transport loads that may fall out or overturn.
- Do not operate near flammable material.

- ATTENTION -

When manoeuvring the vehicle, pay attention to bulky parts above the vehicle. There are parts that j ut out from the cab.

- The vehicle is equipped with a protective cab against falling objecting (FOPS). Use of a safety helmet is required if there is a risk of falling objects.
- Do not use the vehicle at night, in dark or scarcely lit conditions unless the vehicle is equipped with working lights (optional). for additional information, contact your local dealer.

- ATTENTION -

Do not get onto the cargo load without having checked that:

- **it is correctly positioned and anchored**
- **that the vehicle to which it is connected (van, truck etc.) is not able to move**
- **that the deck is able to support the total weight of the vehicle and its load**
- **that the width of the deck is appropriate for that of the vehicle.**

- Pay particular attention to loading docks, to trenches, scaffolding, to land that has been recently excavated or filled.
- When driving on roads or slopes pay close attention to the engine's RPM. A high engine RPM may result in mechanical damage. Always maintain control of RPMs and engine speed.

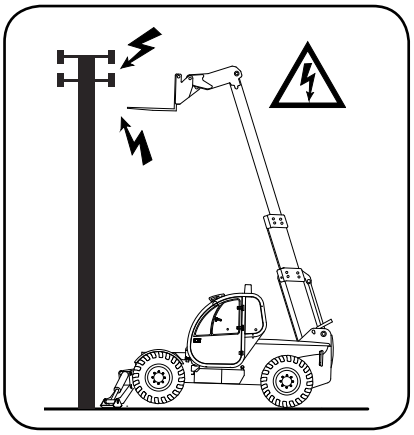

- ATTENTION -

If operating close to overhead electrical lines, check that the safety distance between the vehicle and the electrical line is sufficient, in compliance with current Standard.

Consult your local electric company.
In any case, never work at Operating or parking the vehicle too close to cables; less than 5 m from the lines.
Damp ground may increase the risk of electrocution.

- ATTENTION -

electrical leads to increased risk of being struck by lightning or being seriously injured.

- Designate someone on the ground to signal when the vehicle is too close to power lines.

- Do not allow anyone near the vehicle when operating in the vicinity of power lines. Wear rubber shoes and gloves as a precaution against possible emergencies. Cover the seat with a rubber piece of fabric and take care to not touch the chassis with any unprotected body parts.

- Should the vehicle collide with an electrical cable, the operator, to avoid electrocution, must never abandon the driver's cab until he/she is certain that the electrical power supply has been properly disconnected.

Courtesy of Crane.Market

https://truckmanualshub.com/

- To prevent damaging hydraulic connections when changing an attachment, stop the engine and wait a minute to remove pressure from the circuit. Always clean connectors before their reinsertion.
- Check the cleanliness, protection and the conditions of rapid detachment connections in attachment circuits daily.

- ATTENTION -

Operators who note that the vehicle is not operating properly or that is does not conform to safety regulations must immediately inform the construction site manager.

- PROHIBITION -

IT IS FORBIDDEN for operators to directly carry out repair or adjustment work unless trained to do so. Only the person charged to do so should carry out maintenance work on the vehicle.

- PROHIBITION -

IT IS STRICTLY FORBIDDEN to attempt starting the vehicle by pushing or pulling on it. This may cause serious damage to people and/or the vehicle.

- If operating the vehicle at low temperatures (-10°C), empty and refill the tank using lubricants, fuel or cooling liquids suitable for such temperatures.

- ATTENTION -

The use of the vehicle in protected environments such as refineries or explosive atmospheres is STRICTLY PROHIBITED. Special optional equipment is available for use in these types of locations. Contact your agent or dealer.

- Ensure that service brakes and horn are working properly.
- Slow down before turning.
- Maintain control of the vehicle and its speed in all situations.
- Do not drive in reverse for long distances.
- Brake slowly, avoid abrupt braking.
- Hydraulic steering is very sensitive to steering wheel movements. Steer slowly and avoid any sudden movements.
- The speed of vehicles with loads must never exceed 10 Km/h. Should the load exceed 50% of the maximum admitted load, the machine speed must be reduced to 5Km/h.

- PROHIBITION -

Carrying people on or lifting people up with the vehicle is STRICTLY PROHIBITED unless the vehicle is equipped for said purpose and has a special certificate of conformity regarding the transport of people.

- Carefully follow loading programme instructions.

- ATTENTION -

Before each use, check that attachments have been properly mounted and secured on their corresponding supports.

- ATTENTION -

Prior to each use, check that the cab safety system has been set in compliance with the mounted attachment.

- Instructions supplied by the anti-tipping system must be considered valid for vehicles in standard working conditions, on flat, even ground and with properly functioning and correctly calibrated instruments. Regardless, limit values displayed on the load tables must never be exceeded.
- Never bring equipment near open flames.

Courtesy of Crane.Market

https://truckmanualshub.com/

LOAD HANDLING

- ATTENTION -

Always adhere to safety regulations; always transport balanced, properly arranged loads to prevent overturning.

- Always fully insert forks under loads and bring them to the transport position (forks at 300 mm from the ground and slanted backwards, boom completely retracted).
- Never lift a load harnessed with a single fork or table.
- Always check that the pallets, boxes, etc. are in good condition and suitable for the type of load to be lifted.
- Manoeuvre the mean with the boom raised only in exceptional circumstances. In these circumstances, operate with due prudence, reduce speed as much as possible and brake delicately. Make sure that visibility is always sufficient. If necessary, ask an operator on the ground to guide operations.
- During handling operations, reduce speed as much as possible and brake delicately.
- Do not manoeuvre loads while the vehicle is moving.

- ATTENTION -

Load handling can be carried out only in reduced gears “1” and "II" (first and second gear).

- Before turning, slow down as much as possible, and monitor the load.
- Handle loads with care, at low speed and without sudden or skipping movements, above all if carrying at great heights.
- Do not change direction sharply or at a high speed.

- ATTENTION -

IN THE EVENT OF VEHICLE OVERTURNING, DO NOT ATTEMPT TO EXIT FROM THE TELEHANDLER DURING AN ACCIDENT. ALWAYS FASTEN SEAT-BELTS WHEN DRIVING THE VEHICLE. ALWAYS KEEP SEAT-BELTS FASTENED WHENEVER INSIDE THE CAB.

- Always use the parking brake when setting down or lifting a load on a slope.
- Always ensure good visibility in the work area, including direct vision and visibility using rear view mirrors in order to check for the presence of people, animals, obstacles, holes and changes in slope etc. animals, obstacles, animals, obstacles, holes, slope variations
- If visibility on the right side is limited during boom operation, before lifting the load, ensure that the work area is clear and make note of the position of any possible obstacles and irregularities in the terrain.
- Always ensure good visibility (clean windows, clean and properly working headlights etc.)

- ATTENTION -

The standard illumination of the telescopic loader is not suitable in working conditions with poor visibility or for use at night. There are several ways to improve visibility in poor lighting conditions.
Contact your local *DIECI* dealer.

- Lifting or transporting a load that exceeds the nominal capacity or the vehicle or accessory **IS PROHIBITED**.

- ATTENTION -

BEFORE LIFTING LOADS, OPERATORS MUST BE FAMILIAR WITH THE WEIGHT OF THE LOAD AND ITS CENTRE OF GRAVITY.

- Load tables are valid for centres of gravity that are 500 mm from the heels of the forks. Contact your dealer for information regarding centres of gravity at greater distances.
- Pay **CAREFUL ATTENTION** during the transport of loads with a variable centre of gravity (e.g. liquids). Operate with caution in order to limit such variations and to prevent the risk of vehicle overturning.
- Pay **ATTENTION** regarding the risk of limbs being crushed during manual fork adjustment operations.

Courtesy of Crane.Market

https://truckmanualshub.com/

PARKING THE VEHICLE

- Always park on flat, even and level ground where there is no risk of falling masses, landslides or flooding.
- Lower outriggers to the ground (if present)
- Retract the boom completely and lower it to the ground.
- Engage the parking brake
- Move the “direction” lever to position "N".
- Run the engine for a minimum of 60 seconds before switching off in order to cool the engine down.
- Turn the key to the halt engine position.
- Remove the key from the ignition.
- Block the hydraulic controls using the devices provided (when present).
- Close and lock windows using the specially provided handles.
- Close and lock the cab door.
- Place wedges under the wheels.
- Make sure that the vehicle is parked so that it does not block traffic and at least 5 metres away from railway tracks.

TEMPORARY HALT

- Gradually release the accelerator pedal.
- Bring the vehicle to a halt on flat ground.
- Engage the parking brake
- Move the “direction” lever to position "N".
- While the vehicle is being run-in (50 h) do not keep the diesel engine at minimum revs for too long.

- ATTENTION -

IF THE OPERATOR MUST ABANDON THE DRIVER'S SEAT, HE/SHE SHOULD FOLLOW THE INSTRUCTIONS PROVIDED IN THE PARAGRAPH REGARDING "PARKING THE VEHICLE".

Courtesy of Crane.Market

https://truckmanualshub.com/

ROAD TRAVEL

- ATTENTION -

BEFORE THE VEHICLE IS TRANSFERRED TO THE ROAD MAKE SURE YOU ARE ACTING IN COMPLIANCE WITH THE RULES AND REGULATIONS PERTINENT IN THE COUNTRY OF USE.

THE OBLIGATIONS FOR ROAD TRAVEL ARE GIVEN IN THE VEHICLE REGISTRATION DOCUMENT.

- Dimmed headlights should be used during day hours and on roads where use of visual signals and lighting devices is not mandatory.
- Ensure correct operation and cleaning of headlights, directional lights and windscreen wipers.

- ATTENTION -

ENSURE CORRECT POSITIONING OF REAR VIEW MIRRORS.

PAY ATTENTION AS THE PERCEPTION OF OBJECTS' POSITIONS THROUGH THE REAR VIEW MIRRORS MAY NOT BE EXACTLY AS THEY ARE; THEY MAY SEEM FURTHER AWAY OR NEARER THAN THEY ARE IN REALITY.

ROAD TRAVEL (INSTRUCTIONS)

- Use the levelling control switch to level the vehicle‘s chassis in relation to the axes of the wheels (if present).
- Ensure that all outriggers have been perfectly retracted and raised (if present).
- Close the telescopic arm (boom) completely.
  Lower the main boom completely and raise it slightly (300 mm from ground).
- Make sure the lights are functioning properly before driving the vehicle on roads. Check that the ‘slow vehicle’ revolving indicator light is installed and operational. Keep it activated during both day and night use.
- Carry out the wheel timing. Setting steering as shown in the vehicle handbook and to blocking the selection lever using the relevant device IS COMPULSORY. In Italy set the 4 wheel steering mode; on public roads do not use crosswise steering or 2 wheel steering.
- Ensure that the fuel quantity is sufficient.
- Mount all attachments provided for road driving in compliance with the country where operating.
- Install a overhanging load signal panel on the boom head before the entering onto the road.
- Always evaluate the itinerary to be covered, taking into consideration suspended structures (e.g. bridges, underpasses) that could be damaged by the vehicle.
- In some countries it is mandatory to place wedges under the tyres when the vehicle is stopped.
- Make sure that the vehicle complies with local regulations regarding number plates when travelling on roads during both day and night.

- ATTENTION -

ROAD TRANSFER WITH ATTACHMENTS SECURED ON THE FORK HOLDING PLATE OTHER THAN THOSE PERMITTED BY THE LAW IN THE COUNTRY WHERE THE VEHICLE IS USED IS PROHIBITED.

- ATTENTION -

OPERATING THE VEHICLE ON THE ROAD WHEN IT IS CARRYING A LOAD IS PROHIBITED.

Courtesy of Crane.Market

https://truckmanualshub.com/

HOISTING THE MACHINE

- Disassemble any attachments from the machine.
- Completely retract and lower the boom.
- When the machine is in position, engage the parking brake and position the gear selector in neutral "N".
- Close the windows and lock the door of the cab.
- Ensure that the hoisting mechanism has a suitable capacity for the weight of the machine before attempting to hoist it. The weight of the machine is displayed on a plate.

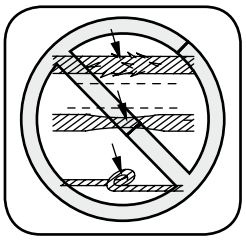

- Always ensure the devices used to anchor the machine (cables, chains, wedges, etc.) are in good condition; ensure they are not worn, broken or twisted.
- Check the capacity of the anchors before hoisting the machine.
- Check the overall dimensions of the machine.
- Use the hoisting points illustrated in the figure and marked on the machine with the appropriate symbols.
- Before hoisting the machine, ensure there are no unauthorised people in the surrounding area.
- Bear in mind the location of the centre of gravity of the telehandler.
- Slowly hoist the machine with the utmost care.

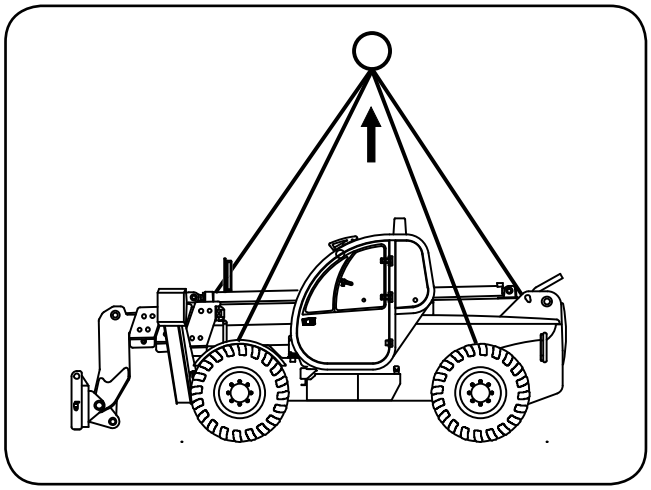

TRANSPORTING THE MACHINE

- Before transporting the machine, ensure that the rules and regulations of every area the machine will travel through are complied with.
- Disassemble any attachments from the machine.
- Completely retract and lower the boom.
- Before loading the machine onto the means of transport, ensure there is no grease, ice or other slippery substances on the machine or the ramp.
- Ensure the brake is engaged on the tractor and the trailer.
- Ensure the safety instructions regarding the transport platform have been applied correctly before loading the machine and that the driver of the means of transport is informed about the overall dimensions and weight of the telescopic handler.
- Load and unload the machine on solid and level ground.
- Check the overall dimensions for the maximum and minimum heights above ground and the permitted weight. Check the authorised soil contact pressure for the platform compared to the machine.
- Load the machine on the means of transport (ensure the ramps are correctly and safely positioned).
- Load the machine parallel to the platform.
- Manoeuvre the machine with caution onto the means of transport.
- When the machine is in a safe position, engage the parking brake and position the gear selector in neutral "N".
- Place wedges under the front and rear of the tyres on the machine. Anchor the machine to the means of transport with cables or chains. Tighten the cables and/or chains.
- Close the windows and lock the door of the cab.

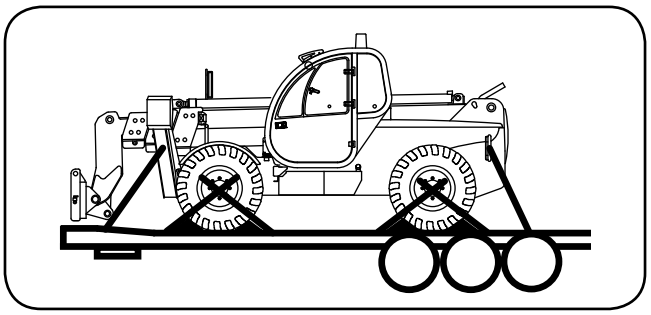

- Use the anchor points illustrated in the figure and marked on the machine with the appropriate symbols.
- Always ensure the devices used to anchor the machine (cables, chains, wedges, etc.) are in good condition and that the capacity of the means of transport is suitable for the weight to handle.

- ATTENTION -

Carefully comply with all the steps described above to ensure the machine is transported safely.

Courtesy of Crane.Market

https://truckmanualshub.com/

ELECTROMAGNETIC INTERFERENCE

- If supplementary equipment is installed by the client, the user must verify if the installation causes any type of interference with vehicle's instruments.
  If this is the case, the user must eliminate this interference.

It is important to pay careful attention to mobile attachments such as radio communications (telephones) which must be installed by specialised technicians and used with externally mounted antennas.

In general, all additional electrical equipment installed must comply with EMC Directive EC/2004/108 and must carry the "CE" marking.

VIBRATIONS

Take into consideration the following precautions to reduce the operator's exposure to vibrations:

- Always use equipment that is appropriate for the type of work being performed.
- The driver's seat must be properly adjusted.. Inspect and, if necessary, repair seat suspensions and adjustment mechanisms.
- Make sure that the vehicle is kept in good condition, follow vehicle maintenance schedule as described in this manual.
- Steer, accelerate, brake, change gears, move attachments slowly.
- While driving, adjust vehicle speed to minimise the vibration level. Reduce speed to prevent risk of jolting. Transport the vehicle if the distance between work sites is significant.
- Keep the work site in good condition, remove rocks and obstacles, fill-in depressions or holes, etc.
- To avoid back problems, use the vehicle only if in good health conditions. The operator should take periodic breaks to reduce the amount of time spent seated in the same position. Never jump down from the cab or the vehicle. Avoid repeatedly handling and lifting loads.

NOISE

The machine has been designed and realised to reduce the sound emission level at the origin.
The detected acoustic power data is equal to 104 dB LwA with reference to Outdoor Noise Directive EC/2000/14 Sources emissions in the environment of equipment and machines working outdoors.

- ATTENTION -

THE GIVEN NOISE VALUES ARE EMISSION LEVELS AND DO NOT NECESSARILY REPRESENT SAFE OPERATIONAL LEVELS.

The factors determining the level of exposure to which the work force is subjected, include the duration of exposure, the work areas and other eventual sources of noise (different manufacturing and equipment, background noise, etc.); furthermore, the admitted levels of exposure can vary from country to country.

During manufacturing, the users must use suitable Individual Protection Devices as indicated in the dedicated paragraph.

PERFORMING MAINTENANCE WORK SAFELY

- Do not leave tools or other instruments laying around in a disorderly fashion at the work site. Clean traces of grease, oil and other substances that could cause slipping. Always keep the work site clean and organised in order to guarantee safe operation of the vehicle. .
- Always deposit cloths soaked with grease and/or inflammable materials in a safe container to ensure safety at the work site.
- Only use attachments that are appropriate for the job and ensure their proper use. The use of damaged, defective, unsuitable and poor quality equipment may cause serious injury.
- Do not hit the vehicle or its parts with a hammer or any other instrument, as projected fragments could cause injury.
- If inspection or maintenance is carried out on vehicles which are still covered with mud, oil, etc., operators risk sliding or falling and the analysis of components is made more difficult. Carefully clean the vehicle before repair or maintenance work is carried out.

Before performing maintenance work on your vehicle, do the following:

- Park the vehicle on flat, even ground.
- Lower and completely retract the boom.
- Keep the boom raised and mount the safety rod if maintenance work must be carried out with the boom raised.
- Run the engine at a minimum for 60 seconds to cool it down.
- Switch off the key in the ignition switch.
- Remove the key from the ignition.
- Release any residual pressure from the hydraulic system, by repeatedly moving the hydraulic distribution levers with the engine switched off.

Courtesy of Crane.Market

https://truckmanualshub.com/

- Hang up a sign that indicates maintenance work is underway. This sign can be hung on the manipulators or the cab door.
- Set up barriers and spacers to prevent unauthorised personnel from approaching the vehicle.
- Disconnect the battery isolator switch.
- Allow the engine to cool down.

- Ensure you are familiar with maintenance procedures before starting work.
- Keep the work zone clean and dry.
- Do not lubricate parts or carry out maintenance work when the vehicle is in motion.
- Never carry out maintenance on a moving vehicle.
  If maintenance needs carrying out with the engine running, **it must be carried out only by personnel authorised by the Dealer or directly by the Manufacturer, *DIECI s.r.l.***

Request assistance of at least two workers and follow the instructions below:

- One worker must always be seated in the driver's seat, ready to switch off the engine at any time.
  All workers must remain in contact with one another.
- Take care not to remain entrapped in components during the execution of operations performed on the fan, belt or other rotating parts.
- Do not touch levers or control pedals. Should a lever or pedal need to be moved, always warn operators first so they can move out of harm's way.
- Do allow instruments or other objects to fall into the vehicle's rotating parts, as these parts may break and be projected out causing danger.

- If you need to perform repair or maintenance work under the vehicle, firmly support the equipment being used and the vehicle with blocks that are solid enough to support the weight.
- Store attachments removed from the vehicle in a safe place where they do not risk falling. Take precautions to prevent unauthorized persons from approaching the storage area.
- Do not rest metal parts on the battery.
- Disconnect the battery wires before working on the electrical system or before carrying out arc welding on the vehicle.
- Welding operations must always be carried out by qualified welders and in areas equipped with suitable equipment. There is danger of gas leaks, fire or electrocution during welding operations; Do not allow unqualified personnel to carry out such operations.
- When carrying out electric welding, connect the earth of the welding machine as close as possible to the area to be welded, and prevent the electric current from passing through ball bearings, articulated joints, hydraulic cylinders or sliding parts. If welding must be done in proximity to the oil or fuel tank, empty the tanks before welding.

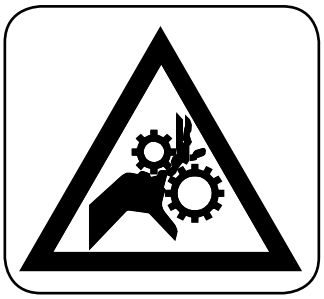

- ATTENTION -

DAMAGE MAY BE CAUSED BY ENTANGLEMENT IN MOVING PARTS. PREVENT ACCIDENTS WHILE YOU ARE WORKING BY ENSURING THAT, HANDS, FEET, CLOTHING, JEWELLERY AND HAIR CANNOT GET CAUGHT IN MOVING PARTS.

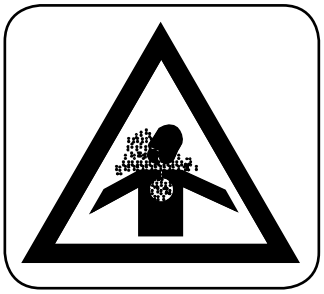

- DANGER -

EXHAUST GASES FROM THE ENGINE ARE TOXIC AND CAN CAUSE DAMAGE TO YOUR HEALTH.

- DANGER -

THE VEHICLE MUST BE OUTDOORS WHEN THE ENGINE IS RUNNING.

THE VEHICLE CAN BE KEPT IN A CLOSED AREA ONLY IF IT IS PROPERLY VENTILATED AND THE VEHICLE IS EQUIPPED WITH SPECIAL PURIFIERS.

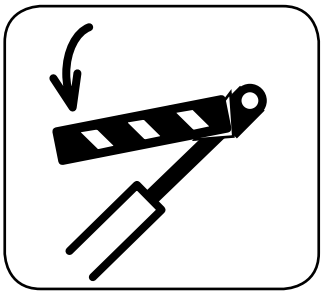

- ATTENTION -

IF YOU NEED TO WORK UNDER THE RAISED MOBILE PARTS (BOOMS, SHOVELS, ETC.) OF THE VEHICLE, BLOCK THEM USING SPACERS PLACED ON THE CYLINDER RODS OR LEAN THEM UP AGAINST APPROPRIATELY SIZED SUPPORTS.

Courtesy of Crane.Market

https://truckmanualshub.com/

- Replace any worn or broken components.
- Eliminate any accumulations of grease, oil or deposits.
- After the machine has been used, the engine coolant will be hot and pressurised. Any contact with hot water and/or steam may cause serious burns.
- Avoid any possible injury caused by hot water jets. Do not remove the radiator cap until the engine has cooled down. To open, unscrew the cap as far as possible. Before removing the cap, release any pressure.
- To prevent burns caused by oil or other red hot parts while checking or unloading, allow the oil to cool down (you should be able to touch the cap with your hand) before starting work. Even when the oil has cooled down, unscrew the cap very gently to release the inside pressure before removing.

- ATTENTION -

BEWARE OF BURNS; THE ENGINE OIL OF THE REDUCTION GEARS AND THE HYDRAULIC SYSTEM, AS WELL AS THE PIPES, ENGINE AND OTHER COMPONENTS BECOME VERY HOT WHEN THE MACHINE IS IN USE. WAIT UNTIL ALL PARTS COOL DOWN BEFORE STARTING ANY MAINTENANCE OR REPAIR WORK.

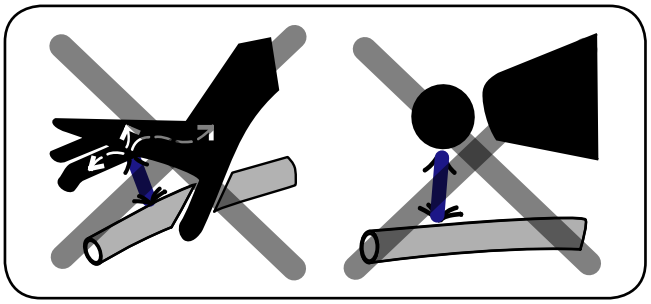

- Fluids such as fuel or hydraulic oil under pressure can penetrate the skin and eyes causing serious injuries. Avoid these risks while carrying out repairs or maintenance on the machine.
- Discharge any pressure (using the hydraulic levers of the distributors) before disconnecting or repairing pipes or hydraulic parts.
- Do attempt to loosen fittings, hoses or hydraulic components while the circuit is pressurised.
- Before restarting the engine, ensure that all fittings have been properly tightened.
- Use a piece of cardboard to check for any leaks; ensure your hands and body are protected against pressurised fluids.
- Any fluids injected under the skin must be removed surgically. If there is an accident, seek medical attention immediately.
- Do attempt to loosen fittings, hoses or hydraulic components while the circuit is pressurised.
- Never touch the coolant in the air conditioner. If the coolant in the air conditioner squirts into the eyes, it can cause blindness; if it touches the skin, it can cause freezing phenomena.
- Cleaning with compressed air poses the risk of serious injury caused by flying particles. Always wear safety goggles, a dust mask, gloves and other safety equipment.

- ATTENTION -

CHANGING THE ADJUSTMENT AND/OR DISASSEMBLING BALANCING VALVES AND SAFETY VALVES CAN BE DANGEROUS.

ONE OF THE AFOREMENTIONED VALVES CAN ONLY BE DISASSEMBLED IF THE RELATIVE JACK IS AT A STANDSTILL AND IF THERE IS NO PRESSURE IN THE HYDRAULIC CIRCUIT.

THIS OPERATION CAN ONLY BE CARRIED OUT BY AUTHORISED PERSONNEL.

- Only use the lubricants indicated by ***DIECI***, never use used lubricants.

Courtesy of Crane.Market

https://truckmanualshub.com/

CLEANING YOUR MACHINE

- Switch off the engine, remove the key from the ignition and wait for the various components to cool down.
- Wear appropriate protective clothing (gloves, mask, overalls, etc.)
- Do not use inflammable liquids, acids or products that may chemically corrode machine components.
- Do not clean moving or hot parts; allow the parts to cool because they could be damaged by abrupt changes in temperature.
- To clean the exterior of the machine and the engine compartment, use a power washer bearing in mind the following:

- Ensure the filler caps are closed properly (radiator, oil tank, fuel tank, etc.)
- Protect control units and connectors from water seepage.
- Do not use water temperatures or pressures over 80°C and 100 bar respectively.
- Do not hold the power washer nozzle less than 40 cm from the surface you are washing.
- Do not concentrate the jet in just one place, wash using large strokes.
- The interior of the machine is delicate and must never be cleaned with a power washer.

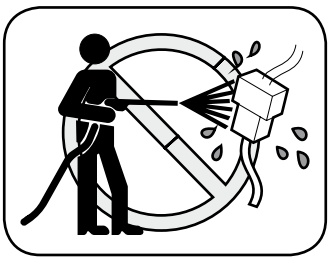

- If any water accidentally falls on the electrical system, the machine will not function correctly. Do not use water or steam to clean the electrical system, sensors or connectors.
- To repair any small defects on the bodywork, ask your ***DIECI*** dealer for tins of touch up paint. Ensure all the stickers are present; replace any stickers that are lost or removed while cleaning.

CLEANING THE WINDOWS

- The cab windows, headlamps and rear-view mirrors must be washed frequently with soapy water.
- After you have cleaned these components, dry carefully. Do not leave any stains or halos that may limit or distort the operator's view.

CLEANING THE CAB

- Clean the soft upholstery in the cab with a cloth that has been immerged in a solution of water and detergent and then tightly squeezed.
- Clean the driver's seat and the floor with a vacuum cleaner and/or a stiff brush. If necessary, use a damp cloth to remove any stubborn stains.

- ATTENTION -

DO NOT USE JETS OF WATER INSIDE THE CAB.

- Clean the seat-belts with a sponge dipped in hot soapy water and simply leave them to dry.
- The fabric seats should be cleaned with a stiff brush or vacuum cleaner. Plastic seats should be cleaned with a damp cloth.

SAFETY STICKERS

- Consult the summary table in the chapter "MAINTENANCE" for the inspection schedule.
- Replace any Danger, Caution, Hazard or instruction stickers that are illegible or missing.
- Read all the safety warnings on the machine and comply with their contents before starting, running, refuelling or carrying out maintenance work. Clean said warnings if covered in mud, cement or other deposits. Do not remove for any reason. If damaged, lost or illegible, replace immediately. Orders must be placed using the same process as for spare parts (ensure you include the model and serial number of the machine when you place your order).
- The location and code numbers of the safety stickers are illustrated in chapter "B – SAFETY STANDARDS" in this manual.

Courtesy of Crane.Market

https://truckmanualshub.com/

STORINGTHEMACHINE/PROLONGEDINACTIVITY

Before a six month period of machine inactivity, the following precautions should be observed:

- Clean the vehicle.
- Touch up paint where necessary to prevent rust.
- Lubricate all greasing nipples.
- Check to see if there are any worn or damaged parts on the vehicle and replace them if necessary.
- Drain the oil from the engine and replace it with new oil.
- Clean the fuel system and change the filter cartridges.
- Empty the normal fuel tank and fill it with ten litres of special prolonged inactivity fuel. Run the engine for ten minutes so the new solution can distribute evenly.
- Drain the coolant from the radiator and the cylinder block and refill them with a solution made of antifreeze and water.
- Remove any attachments.
- Realign the turret.
- Completely lower the boom.
- Remove the battery and store it in a warm, dry place. Recharge it periodically.
- Raise the vehicle onto tripods to take the weight off the tyres.
- Cover the exhaust opening.
- Cover the exposed rods of the hydraulic cylinders with a thin layer of grease.
- Close and lock all windows.
- Close and lock the door.

PREPARATIONAFTERPROLONGEDINACTIVITY

- Inflate tyres with the correct pressure.
- Remove the tripods from the axles.
- Fill the fuel tank.
- Check the radiator coolant level. .
- Check various oil levels.
- Insert a fully charged battery.
- Remove exhaust pipe cover.
- Remove the layer of grease from the exposed cylinder rods.
- Switch on the engine and make sure all controls are working properly.
- Leave the engine running at minimum speed without a load for a few minutes.
- Make sure the brakes are working properly.

Courtesy of Crane.Market

https://truckmanualshub.com/

FIRE PREVENTION

- ATTENTION -

Stop the machine immediately if an alarm lights up in the cab. Contact your *DIECI* service centre and do not operate the machine until the fault has been repaired.

- Before every work cycle, ensure there are no leaks from the machine; fuel, oil, grease or lubricants in general can start fires and cause serious injury.
- Regularly check there are no loose or missing clamps, no twisted hoses or hoses that are rubbing together.
- Do not bend any pipes under pressure. Never install damaged pipes.
- Remove inflammable materials such as fuel, oil, grease, waste, deposits, accumulated dust or any other components that can start a fire.
- Avoid short circuits; they can cause fires.
- Regularly clean and secure all electrical connections. Before every work shift, ensure there are no twisted, hardened or damaged electricity cables. If there is a malfunction, do not start the machine and contact a ***DIECI*** service centre.
- Regularly check the ignition switch. A fault when stopping the engine will obstruct the work of the fire brigade.
- When cleaning parts with oil, use non-inflammable oil. Diesel and petrol fuel can catch fire. Do not use.
- Do not weld or use a cutting torch to cut pipes that contain inflammable liquids.
- When checking the level of fuel, oil, battery electrolyte, windscreen wiper liquid or coolant, always use an explosion proof light source. If other types of lighting are used, there is a risk of explosion.

- ATTENTION -

IF A FIRE DEVELOPS, IMMEDIATELY ABANDON THE MACHINE AND FIND A SAFE PLACE; IF POSSIBLE TURN THE IGNITION TO "0" (ENGINE AND INSTRUMENTS OFF) BEFORE ABANDONING THE MACHINE.

- ATTENTION -

ONLY TRY TO PUT OUT THE FIRE IF IT IS SMALL AND IF YOU HAVE AN OF A CORRECTLY MAINTAINED EFFICIENT EXTINGUISHER

- ATTENTION -

IF THE FIRE DIRECTLY INVOLVES THE OIL OR FUEL TANK, ABANDON THE MACHINE IMMEDIATELY; THE MACHINE COULD EXPLODE.

Courtesy of Crane.Market

https://truckmanualshub.com/

BATTERIES

- ATTENTION -

TO AVOID BATTERY EXPLOSIONS, KEEP SPARKS, NAKED FLAMES AND CIGARETTES FAR FROM THE TOP OF BATTERIES BECAUSE THESE CAN PRODUCE HIGHLY INFLAMMABLE GASES.

- ATTENTION -

THE BATTERY CONTAINS SULPHURIC ACID ELECTROLYTE, A CORROSIVE SUBSTANCE THAT MUST BE HANDLED WITH THE UTMOST CAUTION BECAUSE IT CAN CAUSE POISONING AND SERIOUS BURNS.

KEEP OUT OF REACH OF CHILDREN.

AVOID CONTACT WITH THE SKIN OR EYES.

- ATTENTION -

WEAR PROTECTIVE CLOTHING AND SAFETY GLOVES AND GOGGLES. IN CASE OF CONTACT WITH THE EYES OR SKIN, RINSE IMMEDIATELY WITH ABUNDANT WATER AND CONSULT A DOCTOR. IF SWALLOWED, CONSULT A DOCTOR.

- Do not overturn or tilt the battery to avoid acid leakage.
- Charge the battery in a well-ventilated place and **ALWAYS** disconnect the power supply before disconnecting the terminals.
- Always use a voltmeter or a densimeter to check the battery charge. Use a torch to check the electrolyte level, never a naked flame. Never place anything metallic between the terminals to check the battery charge.
- **DO NOT** generate any sparks with the wire terminals while recharging the battery or while starting the engine with an auxiliary battery.
- Ensure the caps and air vents are correctly assembled and firmly tightened.
- Clean the upper part of the battery, ensure the clamps are firmly assembled and cover with a thin layer of Vaseline.
- If the battery freezes, put in a warm place to defrost. Do not use and do not charge; it could explode.
- In normal conditions, the battery is kept charged by the machine alternator. If the battery is completely flat through prolonged lack of use or because its lifetime is over, the alternator will no longer be able to keep it charged. The battery must be replaced and recharged using a battery charger.

Charging instructions

1. If possible remove the caps.
2. Check the electrolyte level.
3. Clean the poles.
4. Ensure the room is sufficiently ventilated.
5. Limit the charge current to a maximum 1/10 of the battery capacity (Ah).
6. Connect the battery to the charger.
7. Connect the charger to the power supply mains.
8. Switch on the charger.
9. The battery temperature must not exceed 55 °C.
10. When the battery has finished charging, disconnect the battery charger.
11. Disconnect the charger from the power supply mains.
12. Disconnect the battery from the charger.
13. Check the electrolyte level.
14. Reinstall the caps.

Courtesy of Crane.Market

https://truckmanualshub.com/

- Do not charge damaged batteries. Danger of explosion.
- Do not charge a hot battery. Danger of explosion.
- A battery is completely charged if at a constant temperature, the density of the electrolyte and the measured voltage at the poles does not increase within 2 hours.
- Every charge is as good as the general condition of the battery. This means that the charge of an old battery will not achieve the same lifetime and efficiency as a new battery.
- The most straightforward charge method is the constant power charge.
- When charging is over, the charger voltage increases and creates gasification. It is advisable to use straightforward chargers with minimum current control and a timer to switch the charger off.
- If the battery has a low electrolyte level, top up to the minimum level (just above the limit of the plates) and then charge. After ending the charge, fill to the maximum level (to avoid leaks).

Do not overcharge because:

a) It is a waste of energy that causes water disassociation.
b) It produces a loss of active mass due to the deterioration of the electrodes.
c) It creates a danger of explosion.

- If the sulphated batteries are charged without a voltage limit, they will reach boiling point and overheat.
- Charge old batteries with the utmost caution (they will probably be sulphated batteries). Even at 13.8 Volt, there is the risk of an increase in temperature.

- ATTENTION -

All these procedures must be carried out by competent and trained staff.

- ATTENTION -

Batteries contain substances that are particularly hazardous pollutants and must not be disposed of in the environment. Uncharged, old, damaged, etc. batteries must be disposed of appropriately.

Low maintenance batteries

Low maintenance batteries are designed to avoid maintenance during ordinary and normal battery use. If the battery is flat, check the electrolyte level and follow the instructions in the paragraph “BATTERY”. Please consult the supplier or manufacturer for technical specifications.

Maintenance-free batteries

These types of battery do not require any maintenance. When the battery is flat, it must be replaced. Please consult the supplier or manufacturer for technical specifications.

- ATTENTION -

DO NOT CARRY OUT ANY MAINTENANCE OR ATTEMPT TO RECOVER MAINTENANCE-FREE BATTERIES.

STARTING UP WITH AUXILIARY BATTERIES

- ATTENTION -

Two adequately trained and qualified people are required to start the engine using an auxiliary battery.

Any mistakes during this procedure can cause serious damage to the machine, things and people.

- When starting the engine from another machine, connect the batteries in parallel. When connecting the cables, avoid contact between the positive cable “+” and the negative cable “-“.
- Ensure you are wearing appropriate protective clothing before carrying out any procedures.
- Take care to avoid contact between the machine to be started up and the machine that has to supply the power, to avoid sparks and consequently explosions caused by the hydrogen produced by the batteries. If the battery explodes, it could cause serious damage and injury.
- Ensure you never accidentally switch the starting cables and connect first the ground lead (-) and lastly the positive voltage lead (+).
- Use great care when removing the starting cables; ensure that when the cables are disconnected from the battery they do not touch other parts of the machine to prevent hydrogen explosions.

- ATTENTION -

THE CABLES AND THE CLIPS MUST BE SIZED ACCORDING TO THE POWER CHARGE TO BE TRANSFERRED.

THE CAPACITY OF THE BATTERY USED TO START THE MACHINE MUST BE GREATER OR AT LEAST EQUAL TO THE CAPACITY OF THE BATTERY ON THE MACHINE.

- ATTENTION -

ENSURE THE CABLES AND CLIPS ARE NOT CORRODED OR DAMAGED.

ENSURE THE CLIPS GRIP THE TERMINALS FIRMLY.

- ATTENTION -

TAKE THE UTMOST CARE DURING THE VARIOUS PROCEDURES, DIRECT OR INDIRECT CONTACT WITH LIVE PARTS CAN CAUSE INJURY AND SOMETIMES EVEN DEATH.

- ATTENTION -

WHEN THE ENGINE IS STARTED, THE OPERATOR MUST BE SEATED IN THE DRIVER’S SEAT TO ENSURE THE MACHINE IS UNDER HIS OR HER CONTROL.

Courtesy of Crane.Market

https://truckmanualshub.com/

Connecting the cables and starting the engine

1. Ensure the ignition key is in position “O”.
2. Connect the positive poles “+” on the two batteries “A”.
3. Connect the cable on the negative terminal “-“ of the charged battery to the ground block on the machine to be started up “B”.
4. Start up the engine of the machine that is working properly and rev up the engine.
5. Start the engine of the machine that has broken down.

Removing the cables

With the engine running, remove the cables in the reverse order in which they were connected.

1. Disconnect the negative cable (-) from the ground block on the started engine and then from battery “B”.
2. Disconnect the positive cable “+” first from the battery used to start up and then from the battery of the machine with the flat battery. “A”.

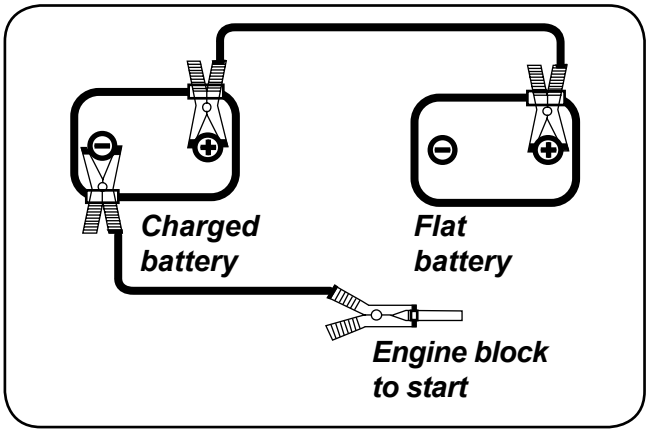

- ATTENTION -

ALL THESE PROCEDURES MUST BE CARRIED OUT BY COMPETENT AND TRAINED STAFF.

ELECTRICAL SYSTEM OVERLOAD PROTECTION

- ATTENTION -

Burnt fuses must be replaced with another fuse of the same type.
Other types of repairs are forbidden, even if temporary.

- Do not connect or remove terminals, fuses or connectors while the machine is running or being electrically powered.

- ATTENTION -

Any work on the electrical system must be carried out while the machine is disconnected from the power supply. Do not restore the power supply until the work has been completed and all covers and protection devices have been reassembled.

- Act on the battery cut-out to disconnect the power supply to the machine.
- Also disconnect the power supply by acting on the battery cut-out before replacing the battery.
- If a connector is damaged or no longer enters its housing, replace immediately to avoid short circuits, sparks, etc.

- ATTENTION -

Damaged, pinched or burnt cables must be replaced immediately even if the damage only concerns the sheath or external insulation.

- Never connect or disconnect the charge circuit (including battery connections) while the engine is running.
- Never short circuit at the ground (earth) any charge components.
- Do not use an auxiliary battery with a rated voltage above 12 Volts.
- Always ensure the polarity is correct when installing batteries or using an auxiliary battery to start up using jump cables. Comply with the instructions in the use and maintenance manual when starting the machine with jump cables. Connect positive to positive and negative to negative.
- Always disconnect the negative cable from the batteries before carrying out any arc welding on the machine or any attachments connected to it.
- Position the welder ground terminal as close as possible to the area to weld.

- ATTENTION -

If the welding needs to be carried out near an electrical module, the module must be removed from the machine. Ensure this procedure is carried out by qualified and authorised personnel.

- Ensure the welder cables are not above, near or cross any electrical cables or electronic components while welding is being carried out.

Courtesy of Crane.Market

https://truckmanualshub.com/

TIGHTENING WHEEL NUTS

- Tighten nuts in accordance with the schedule provided in the maintenance table
- When tightening the wheel nuts, torque should be as follows:

  Wheel stud 18 kgm 50
  Wheel stud 22 kgm 60

- Always tighten the nuts positioned opposite each other, not consecutively.
- After having remounted the wheel, tighten the nuts between the wheel and axles. Check that nuts are tightened each day until torque has stablised.

- ATTENTION -

THE NUMBER OF AXLE STUDS MUST CORRESPOND TO THE NUMBER OF TIGHTENED NUTS.THEREFORE ALL NUTS MUST BE MOUNTED IN ON EACH TYRE; OTHERWISE THE VEHICLE WILL NOT OPERATE.

- In the event of tyre replacement, the vehicle or the lifted side can be set back on the ground only with tyres mounted and properly tightened.

- ATTENTION -

NUT TIGHTENING MUST BE CARRIED OUT FIRST WITH THE VEHICLE, OR PARTS OF IT, LIFTED FROM THE GROUND, AND THEN WITH THE VEHICLE ON THE GROUND.

- Only use original ***DIECI*** nuts to tighten the wheels. Should even just a single nut be lost, contact the ***DIECI*** service centre.

TYRES

- ATTENTION -

UPON RECEIPT OF THE VEHICLE, CHECK TYRE AIR PRESSURE.

- Check tyre pressure every 100 hours and every two weeks. Pressure should be checked when the tyres are cold.
- Before each use, verify that the sides of the tyres are not damaged.

- ATTENTION -

TYRES THAT ARE TORN OR ARE EXCESSIVELY WORN SHOULD BE REPLACED IMMEDIATELY.

- Keep all oils, grease and corrosive liquids far from the tyres to prevent any damage to the rubber.
- Tyre pressure must be kept at the level indicated in the table. The tyre pressure given corresponds to the recommendations of the manufacturer, and should therefore be respected as far as possible.

Tyre pressure table

MISURA PNEUMATICO TYRES DIMENSIONS DIMENSION DES PNEUS DIMENSION DE LOS NEUMATICOS REIFENMASS	CARATTERISTICHE DETAILS CARATTERISTIQUES CARACTERISTICAS EIGENSHAFTEN	BAR
10,5 R18	10PR	3,75
12,5 R18	10PR	3,0
12,5 R18	12PR	3,0
12,5 R20	12PR	3,5
18 R19,5	16PR	4,5
16/70 R20	14PR	3,5
18 R22,5	16PR	4,5
405/70R20 (16/70-20)	14PR	3,5
405/70R20 (16/70R20)	152J	6,0
405/70R24 (16/70-24)	14PR	4,0
405/70R24 (16/70R24)	152J	5,0
445/65R22,5 (18R22,5)	169F	8,0
445/65 R22,5	168A8	8,5
14.00 R24	16PR	3,75
17.5L R24	16PR	4,0
445/70R24 (17.5LR24)	151G	4,1
500/70R24 (19.5LR24)	164A8	4,0

- Check the size of the tyres installed and the ply number to ensure they are inflated to the correct pressure.
- To ensure maximum efficiency do not use tyres with more than 80% of tyre tread wear.

- ATTENTION -

Inflating or working on tyres can be dangerous. Whenever possible, have specialised personnel intervene on or install tyres. To prevent serious or mortal injury, follow the safety precautions described below.

- Vehicle tyres are very heavy. Handle with care and ensure that, once stored, they cannot fall and injure anyone.
- Never attempt to repair a tyre on a public road or motorway.
- Make sure that the car jack is positioned on a solid, flat surface.
- Make sure that the jack is suitable to support the weight of the vehicle.
- Use jack tripods or other locking devices suitable for supporting the vehicle while repairing tyres.
- Never place any part of your body under the vehicle.
- Never start up the vehicle while it is on the jack.
- Never hit a tyre with a rim or hammer.
- Make sure that the rim is clean, and that there is no rust or damage. Do not weld, braze, repair or use a damaged rim in any way.

Courtesy of Crane.Market

https://truckmanualshub.com/

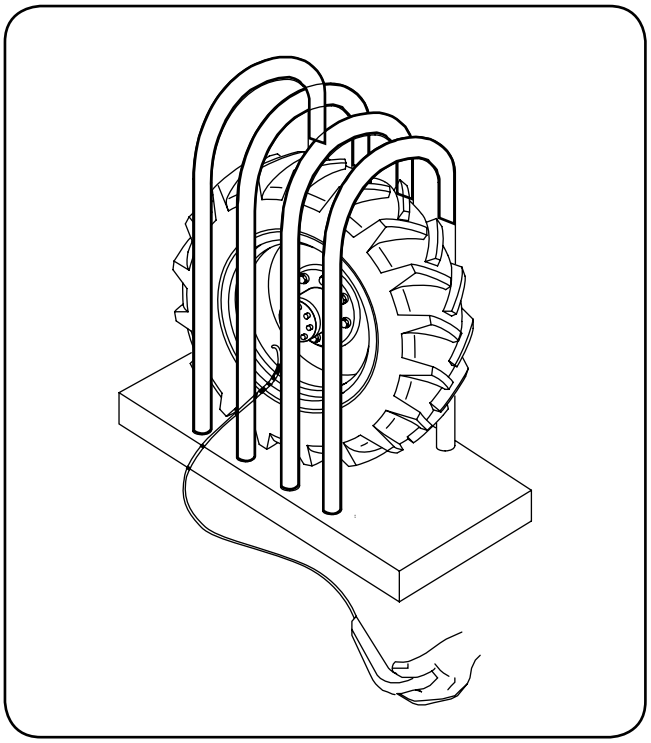

- ATTENTION -

WHEN MOUNTING A NEW OR REPAIRED TYRE, USE AN ADAPTER FOR THE SPRING VALVE WITH A DISTANCE MANOMETER WHICH ALLOWS THE OPERATOR TO KEEP AWAY FROM THE TYRE DURING INFLATION. USE A SAFETY FENCE SYSTEM.

- Do not inflate a tyre unless the rim is mounted on the vehicle or secured so that it will not move in the event that the tyre or rim should suddenly break.

- Never inflate tyres in excess of the pressure indicated by ***DIECI***. If the heel does not settle on the rim when this pressure level is reached, deflate the tyre and lubricate with a soapy water solution, then inflate again. Do not use oil or grease. Inflation exceeding the permitted level on unsettled heels can cause heel or rim breakage with an explosive force that can cause serious injury.

- PROHIBITION -

DO NOT MOUNT INFLATED TYRES WITH POLYURETHANE FOAM UNLESS AUTHORISED BY THE MANUFACTURER.

- Do not re-inflate a tyre which has completely turned or that is very deflated until it has been properly inspected by a qualified technician.
- After having remounted the wheel, tighten the nuts between the wheel and axles. Check that nuts are tightened each day until torque has stablised.

Replacing a tyre on the road

- When a tyre must replaced along the road, proceed as follows:

- If possible, park the vehicle on flat, even ground.
- Engage the parking brake.
- Switch off the engine.
- Engage emergency lights.
- Put wedges under tyres opposite from the tyre to be replaced in order to block the vehicle from moving in both directions.
- Loosen the bolts of the tyre to be replaced.
- Place the jack under the half-box of the axle, as close as possible to the tyre.
- Lift the tyre until it comes off the ground; position the safety support under the axle.
- Completely unscrew the bolts from the tyre and remove them.
- Remove the tyre with "push and pull" rotating movements.
- Insert the new tyre on the hub.
- Manually screw in bolts. Lubricate them with grease if necessary. Tighten bolts securely with a torque wrench.
- Remove the safety support and lower the telehandler with the jack.
- Re-tighten bolts to the tyre securely with a torque wrench.

Courtesy of Crane.Market

https://truckmanualshub.com/

STORING DANGEROUS FLUIDS

- Handle fuels carefully; they are highly inflammable. If fuel is ignited, there may be an explosion and/or fire.

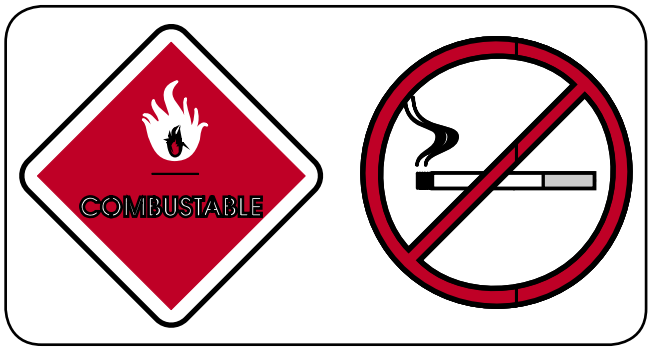

- ATTENTION -

All fuels, the majority of lubricants and some types of antifreeze are inflammable.

- All inflammable fluids must be stored in special containers and the contents clearly indicated. The containers must be airtight.

- ATTENTION -

All fluids must be stored out of reach of children and unauthorised personnel.

- Different fluids must not be mixed together.

- ATTENTION -

All chemical products are generally toxic; avoid contact with the skin and eyes by wearing suitable protective clothing. Do not swallow.

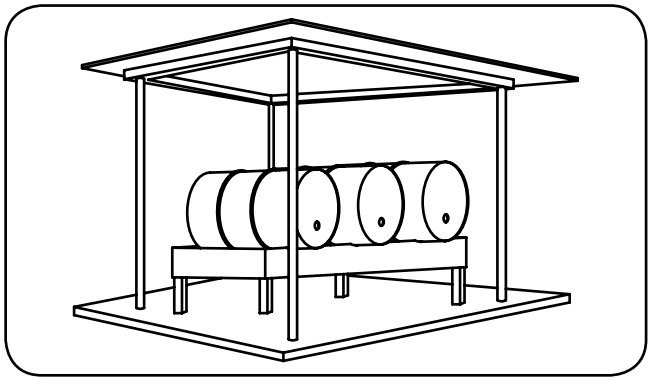

- ATTENTION -

Store inflammable fluids in an especially reserved, well-ventilated storeroom, far from heat sources, sparks and flames.

Keep containers closed and indoors.

There must be no other substances inside the inflammable fluids storeroom (e.g. food).

- Always fill the tank in the open air.

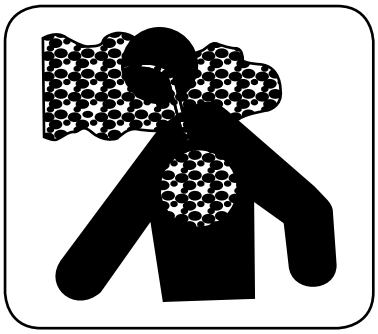

- Beware of the fumes and vapours produced by chemical products. Do not inhale.
- Do not inhale combustion fumes.
- Ensure these chemical products are not dispersed in the soil, sewers or surface water. If necessary, inform the competent local authorities.
- In case of fire, use carbon dioxide, dry chemical powder, foam, water mist, sand or earth. Use jets of water to cool surfaces exposed to the fire.
- Ensure the storage containers do not leak inflammable fluids (fuel, oil, grease, lubricants in general).

CONTACT WITH DANGEROUS FLUIDS

- Avoid contact with the skin or eyes.
- Wear appropriate protective clothing.
- In case of contact with the eyes, rinse immediately with plenty of water for a few minutes holding the eyelids open and then consult a doctor.
- In case of contact with the skin, wash the area carefully with soap and water, remove any contaminated clothing, and if the skin tends to be dry, apply a moisturising cream.
- In case of inhalation, leave the contaminated area and reach a well-ventilated location. Consult a doctor in case of respiratory problems.
- If swallowed, consult a doctor. Show the doctor the label or the container. Do not provoke vomiting to avoid the risk of inhaling the product through the respiratory tract.

Courtesy of Crane.Market

https://truckmanualshub.com/

DIESEL

- Before handling fuel, filling the tank, etc., comply with the following rules:

- Never mix other types of fuel with diesel, such as petrol or alcohol.

- ATTENTION -

IT IS FORBIDDEN TO REFUEL WITH THE ENGINE SWITCHED ON.

- Clean the area around the fuel cap. Fill the fuel tank at the end of every day to reduce condensation during the work break.
- Water and sediment must be removed before they reach the engine.
- Do not use antifreeze to remove water from the diesel fuel.
- Do not rely on the filter to remove water from the diesel fuel.
- Never leave the fuel cap off and always lock. If you lose the original cap, replace with an original spare part. Not just any cap will fit.
- Keep an eye on the fuel pump nozzle while filling the tank.

- ATTENTION -

DO NOT SMOKE DURING THE AFORESAID OPERATIONS.

- Do not use a flame to inspect the fuel tank.
- Do not fill the tank completely. Leave room for the fuel to expand and immediately clean any spillage.
- Before carrying out any welds on the tank or any components in close contact with the tank, ensure there is no fuel inside.
- If there are any fuel leaks due to breakages, stop the leak as soon as possible and contact a ***DIECI*** service centre.

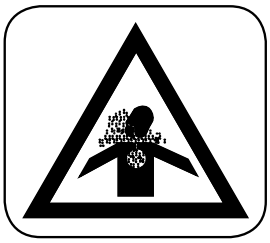

- ATTENTION -

AVOID INHALING DIESEL VAPOURS; THEY ARE CARCINOGENIC AND A HEALTH HAZARD.

RECOMMENDED FUEL SPECIFICATIONS

To ensure good performance, use a high quality fuel. The recommended fuel specifications are given below.

Cetane number	45 minimum.
Viscosity	2/4.5 centistokes at 40°C.
Density	0.8201860 kg/litre at 15°C
Sulphur	Sulphur 0.20% in weight, maximum.
Distillation	85% at 350°C.

Cetane number

The cetane number indicates the ignition capacity.
Fuel with a lower cetane number may cause ignition problems when the engine is cold and could affect combustion.

Viscosity

The viscosity value indicates the flow resistance; engine performance can be affected if the viscosity value is not within the limits.

Density

A lower density reduces engine power, higher density increases engine power and the smokiness of the exhaust fumes.

Sulphur

A high sulphur level wears out the engine and creates pollution.

Distillation

Distillation indicates the mixture of different hydrocarbons in the fuel. A high proportion of light hydrocarbons might affect the combustion specifications.

Fuel for low temperatures

If the engine needs to be used at temperatures below 0°C, special winter fuels can be used. These fuels have a lower degree of viscosity and restrict the formation of paraffin in the fuel. The formation of paraffin prevents the fuel from passing through the filter.

Courtesy of Crane.Market

https://truckmanualshub.com/

CLEANING AND STORING DIESEL FUEL

It is essential the fuel is kept clean.

The advice given below will help to maintain the quality of the fuel.

1. Never use zinc containers.

2. Never clean the inside of fuel containers or fuel system components with cloths that may leave deposits.

3. The capacity of the fuel storage tank must ensure that the intervals between one refuelling and the next are not too long. A capacity of 3,000 litres is sufficient for an average sized company.

4. The storage tank (see the figure below) must be covered and placed on a support high enough to exploit the force of gravity when refuelling the machine. A tank to collect any spillage must be located below. It should also be equipped with a manhole to allow access for cleaning.

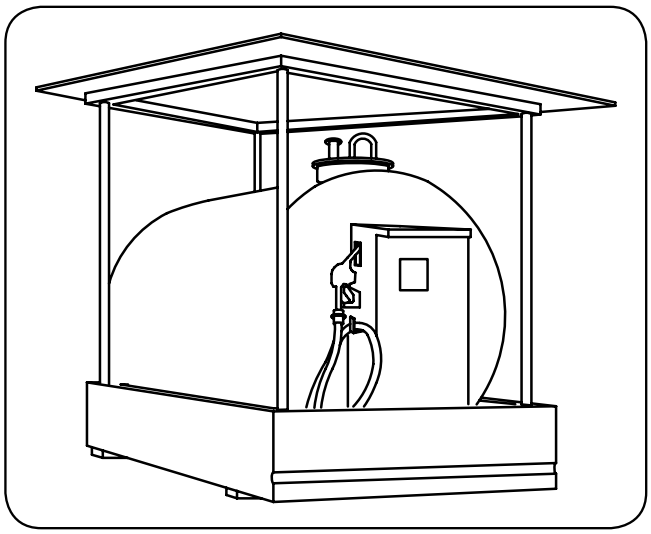

5. The delivery tap must be larger at the bottom to trap any deposits; it should also be equipped with a removable filter. The tank must be tilted by 40 mm per metre towards the sediment drain plug.

6. Fuel barrels (see the figure below) must be stored under cover to prevent water seepage. The barrels should also be tilted slightly, to allow any water to drain off the upper rim. The fuel barrels must not be stored for too long before being used.

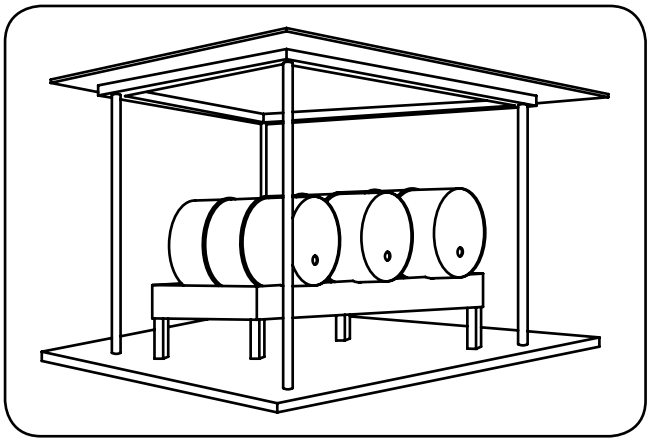

7. If the barrels are kept in the open, the cap must be tightly closed to prevent water seepage.

8. After refilling the fuel tank or barrels, it is advisable to leave the fuel to stand for at least two hours so that any water or impurities can deposit before the fuel is used.

Courtesy of Crane.Market

https://truckmanualshub.com/

ECOLOGICAL CONSIDERATIONS

- ATTENTION -

A few helpful recommendations are listed below. Find out about the current standards and legislation in effect in your country.

Ask suppliers of lubricating oils, fuels, antifreeze products, detergents, etc. for information on the effects of these products on people and the environment and the regulations to be observed when using, storing and disposing of them.

- Do not refill tanks using unsuitable jerry cans or pressurised refuelling systems as they can cause leaks and loss of significant amounts of liquid.

- Modern lubricating oils contain additives.
  Do not burn contaminated fuel oils and/or oils used in conventional heating systems.

- Do not spill exhausted engine coolants, engine and transmission lubricating oils, hydraulic oil, brake oil etc. while pouring or draining them. Store safely until it is time to dispose of them in compliance with current legislation or local regulations.

- Modern antifreeze fluids and their solutions (e.g. antifreeze and other additives) should be replaced every two years. Ensure they do not soak into the soil. They must be collected and disposed of appropriately.

- Do not work directly on the air conditioning system (optional). Do not open the air conditioning system. It contains gas that must not be released into the atmosphere. Contact your dealer or an expert who has the equipment required to refill the system.

- Immediately repair any leak or fault in the cooling or engine hydraulic systems.

- Do not increase the pressure in a pressurised system, the components may explode.

WASTE DISPOSAL

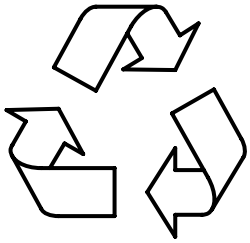

- Waste material should not be scattered in the environment but disposed of appropriately. Used lubricants, batteries, greasy rags, brake pads, etc. must be handed over to specialised companies authorised to dispose of pollutant waste.

- Improper waste disposal is a threat to the environment. Potentially hazardous waste includes lubricants, fuel, coolant, filters and batteries.

- Do not dispose of waste on the ground, in sewers or waterbeds.

- Contact your local authority or waste collection centre for information on how to recycle or dispose of waste properly.

Courtesy of Crane.Market

https://truckmanualshub.com/

dDIECI macchine edili ed agricole

Courtesy of Crane.Market

https://truckmanualshub.com/

CHECKING THE WIND SPEED

- Variations in wind speed can cause several inconveniences such as loss of machine stability, load oscillation, and a reduction in visibility due to blowing dust, leaves, etc.

- Other unfavourable factors affecting machine use include:

- Site location; the aerodynamic effect of buildings, trees and other structures increase the wind speed.
- The height of the extended boom; the higher the boom, the higher the wind speed.
- Load dimensions; the larger the area occupied by the load, the more it is affected by the force of the wind.

- ATTENTION -

***DIECI* telehandlers can be used in wind speeds up to 45 Km/h equal to 12.5 m/s (no. 6 of the Beaufort scale) measured at ground level.**

- ATTENTION -

At a temperature of 10°C, in winds with a speed of 32 Km/h, the sensation of exposed body parts is a temperature of 0°C; the higher you are the higher the wind speed and the colder you will feel.

- ATTENTION -

If there is a fresh breeze (fig. 1/B n. 5 in the Beaufort Scale), never raise loads with a surface area greater than one square metre.

Below is a graph of the Beaufort scale (fig.1/B) to give an indication of the wind speed at which you can work and when to suspend work if certain values are exceeded.

THE BEAUFORT WIND SCALE

No	DESCRIPTION	CONDITIONS	SPEED m/s
0	Calm	Smoke rises vertically	0 - 0,2
1	Light air	Direction of wind shown by smoke drift	0,3 - 1,5
2	Light breeze	Wind felt on face; leaves rustle; ordinary vanes moved by wind.	1,6 - 3
3	Gentle breeze	Leaves and small twigs in constant motion; wind extends light flag	3 - 5
4	Moderate breeze	Raises dust and loose paper; small branches are moved.	5 - 8
5	Fresh breeze	Small trees in leaf begin to sway; crested wavelets form on inland waters.	8 - 11
6	Strong breeze	Large branches in motion. Whistling heard in overhead wires. Umbrella use becomes difficult	11 - 14
7	Near gale	Whole trees in motion. Effort needed to walk against the wind	14 - 17
8	Gale	Breaks twigs off trees; generally impedes progress.	17 - 21
9	Severe gale	Slight structural damage occurs (chimney-pots and slates removed)	21 - 24

(fig.1/B)

Courtesy of Crane.Market

https://truckmanualshub.com/

EVALUATE THE CONSISTENCY OF THE GROUND

The ground on which the telehandler is positioned must be able to support the machine and its maximum load.

- ATTENTION -

If the ground under the telehandler collapses, the machine may roll over.

- Comply with the following indications to avoid overturning the machine:

- Ask your employer (works manager, construction assistant) if there may be any hidden cavities below the stabilisers (pipelines, wells, old cisterns, basement ceilings, manure pits, etc.)

- The operator must evaluate the consistency of the ground, using the tables and graphs provided. In case of doubt, consult the civil engineer present on the site or seek the advice of an external engineer.

- Depending on the type of ground and its geomorphologic characteristics, the subsoil can only support a limited quantity of stress. The table in fig.3/B indicates the allowed surface pressure underneath the telehandler stabilisers.

- On the basis of the "*Maximum pressure exercised on the ground by the stabiliser feet*" Table (fig.2/B) and the data extracted from the table in fig.3/B, "*Allowed surface pressure on varying ground types*", it is possible to deduct the necessary support surface (increased support bases).

- ATTENTION -

Always seek the advice of a civil engineer for the most reliable and exact evaluation possible of the ground where you intend to work and the dimensions of the support plates.

- ATTENTION -

On request, *DIECI* can provide enlarged base supports.

EXTENSION (mt)	PRESSURE (kg/cm)
7 mt	10 kg/cm²
8 mt	10 kg/cm²
9 mt	10 kg/cm²
10 mt	10 kg/cm²
11 mt	10 kg/cm²
12 mt	10 kg/cm²
13 mt	10 kg/cm²
14 mt	10 kg/cm²
16 mt	10 kg/cm²
17 mt	10 kg/cm²

(fig. 2/B) "Maximum pressure exercised on the ground by the stabiliser feet" Table

Type of ground, geomorphologic specifications		Allowed surface pressure Kg/cm²	N/mm²
Loose, non-compacted ground		Generally not solid, requires special measures	
Limey, peaty, pasty ground			
Coherent, soft ground			
Incoherent, well compacted ground, sand, gravel		2.0	0.2
Coherent ground	Solid	1.0	0.1
	Semi solid	2.0	0.2
	Hard	4.0	0.4
Rock, concrete, road surface suitable for the transit of heavy goods vehicles		Over 10.0	Over 1.0

(fig. 3/B) Allowed surface pressure on varying ground types

Maximum load bearing capacity	Allowed surface pressure		
	1 Kg/cm²	2 Kg/cm²	4 Kg/cm²
	Necessary support surface		
10t	1.0m x 1.0m	0.7m x 0.7m	0.5m x 0.5m
20t	1.4m x 1.4m	1.0m x 1.0m	0.7m x 0.7m
30t	1.7m x 1.7m	1.2m x 1.2m	0.9m x 0.9m
40t	2.0m x 2.0m	1.4m x 1.4m	1.0m x 1.0m
50t	2.2m x 2.2m	1.6m x 1.6m	1.1m x 1.1m
60t	2.4m x 2.4m	1.7m x 1.7m	1.2m x 1.2m

(fig. 4/B) Dimension of the support surface compared to the geomorphic characteristics of the ground

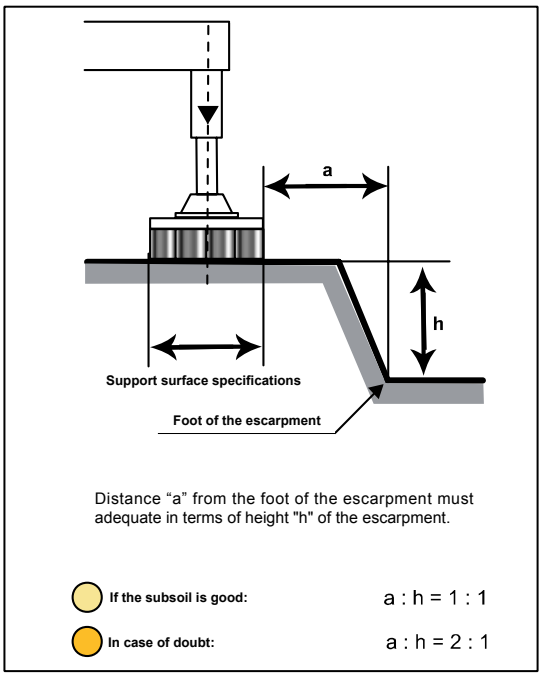

(fig. 5/B) Machine positioned on an escarpment

Courtesy of Crane.Market

https://truckmanualshub.com/

SAFETY DEVICES

The vehicle is equipped with certain safety devices (Proximity, Micro-switches, and Load monitoring devices) which safeguard its use from incorrect manoeuvres or from carelessness.

Safety device housing inside the cab

(fig.7/B)

- (A) Seat micro switch (fig.7/B)
- (B) Hand grip micro switch boom joystick (fig.7/B)
- (C) Machine functions selector key (fig.7/B)
- (D) Load monitoring system (fig.7/B)
- (E) Override key selector anti-tipping device (fig.7/B)
- (F) Alarm re-entry push button anti-tipping device (plank) (fig.7/B)
- (G) Alarm re-entry push button anti-tipping device (Joystick) (fig.7/B)
- (H) Parking brake (fig.7/B)
- (I) Mushroom-shaped emergency button (fig.7/B)
- (L) Spirit level (fig.7/B)

Courtesy of Crane.Market

https://truckmanualshub.com/

Vehicle safety device housing

Cab emergency exit (REAR cab window).
(fig.8/B,pos."1")

(fig.8/C)

Inclinometer (head on his arm).
(fig.9/B)

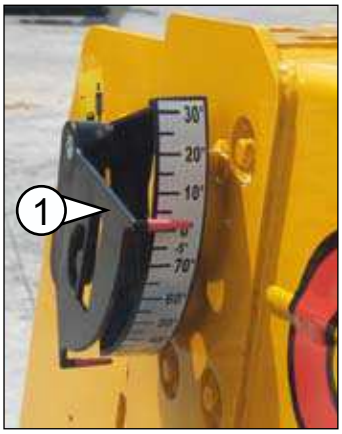

(fig.9C)

Valve block in all hydraulic cylinders.
(fig.10/B - Pos."1" - fig.11/B - Pos."1")

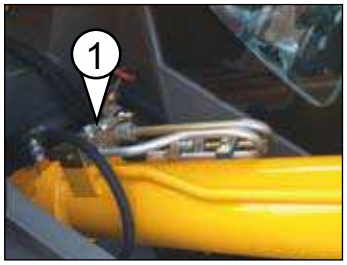

(fig.10/B)

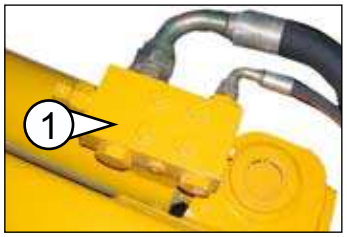

(fig.11/B)

Courtesy of Crane.Market

https://truckmanualshub.com/

Boom support spacer.
(fig.11/B - Pos."1", fig.12/B)

- ATTENTION -

The boom support spacer must only be used during routine maintenance operations.
When carrying out maintenance work on the boom raising cylinder or on the related block valve, the boom must be supported by a suitable raising mechanism (Minimum capacity 3 tons).

- ATTENTION -

To insert the spacer, proceed as follows:

- Completely close the boom extensions
- Raise the boom the minimum height necessary to mount the spacer to the rod;
- Lock the spacer (fig.12/B - Pos."1") with the relevant hooks (fig.12/B - Pos."2")

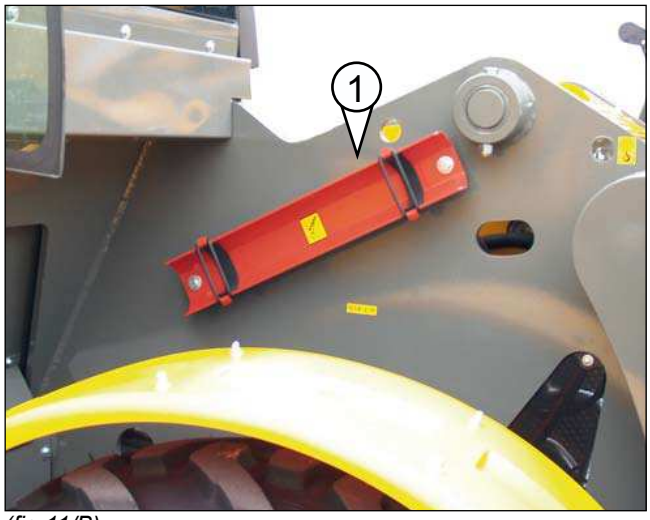

(fig.11/B)

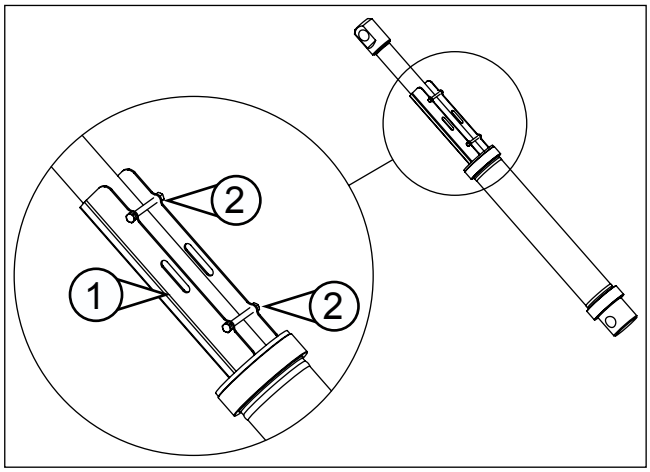

(fig.12/B)

Courtesy of Crane.Market

https://truckmanualshub.com/

DRIVER'S CAB
(fig.13/B Pos."1")

All vehicles are equipped with a driver cab that also acts as a safety cell for the operator.

- ATTENTION -

THE CAB IS A SAFETY COMPONENT AND THEREFORE MUST ALWAYS BE KEPT ACCORDING TO PROPER CONDITIONS FOR USE.

- PROHIBITION -

IT IS PROHIBITED to modify,
perforate or alter the cab structure in any way.
If the cab is tampered with the guarantee is automatically voided and the manufacturer is relieved of all liability.

- DO NOT weld or mechanically connect components to the cab's chassis.
- In case you need to replace attachment bolts, only use elements of the same class of resistance.
- Never connect chains or ropes to the cab for towing purposes.
- In the event of vehicle overturning, do not attempt to exit from the cab during the accident.

- ATTENTION -

REMAIN INSIDE THE CAB WITH SEAT-BELT FASTENED FOR BEST PROTECTION.

(fig.13/B)

ROPS-FOPS CAB
(fig.13/B - Pos. "1")

The vehicle is equipped with a ROPS and FOPS-approved cab. The operator is therefore protected against overturning and falling objects, as prescribed for traxcavators. During use, it is compulsory the use of safety seat belts to prevent the driver's impact with the cab inner structures. The rear window may be used as emergency exit. Opening the window completely during use of the vehicle IS STRICTLY PROHIBITED, due to possible shearing hazards between boom and chassis

- ATTENTION -

IF THE CAB SHOWS VISUAL DAMAGE, IT MUST BE REPLACED; CONTACT AN AUTHORISED SERVICE CENTRE OR AUTHORISED WORKSHOP OF *DIECI*.

Courtesy of Crane.Market

https://truckmanualshub.com/

LOAD TABLES

- ATTENTION -

CHECK THE LOAD TABLES FOR YOUR VEHICLE IN CHAPTER "H", TECHNICAL SHEETS

The Safe Working Load (SWL) of these vehicles depends on the extension and angle of the boom.

This vehicle is equipped with an anti-tipping device.

For further information on the **safe load indicator see** the relevant paragraph (in chapter "C" Getting to Know Your Vehicle, Anti-tipping device").

The load table located inside the cab illustrates the safe working capacities in relation to the various positions of the boom.
The boom extension is marked by letters: "A" "B" "C" "D", etc.

The load table illustrates the maximum height and extension achievable without exceeding the safe load. The telehandler is also equipped with its own load table. The load table is calculated with standard forks.
When certain attachments are fitted on the vehicle the further Load Tables are supplied.

The load table indicated is for reference purposes only.
Before lifting or positioning modes, consult the relative tables in the book at the side of the steering wheel, or consult chapter "h" (vehicle technical sheets) in this manual.

- ATTENTION -

The limits given in the load Tables refer to the vehicle at a halt. Do not lift or extend the boom when the vehicle is in motion. Retract the boom completely and lower it as far as possible before moving the vehicle with a load.
Check which boom attachment has been mounted on the vehicle and then consult the relevant load table.

USING THE LOAD TABLES AND BOOM INDICATORS

- ATTENTION -

For your safety and the safety of the vehicle, follow information described below.

- ATTENTION -

The limits indicated in the load tables refer to the stopped vehicle on wheels or outriggers (if present) on levelled, solid ground.

Do not lift or extend the boom when the vehicle is in motion.

Retract the boom completely and lower it as far as possible before moving the vehicle with a load.

Check which boom attachment has been mounted on the vehicle and then consult the relevant load table.

Before proceeding to lift or put down a load, it is essential that you know how much it weighs.

Make sure the centre of gravity of the load does not exceed 500 mm measured from the heels of the forks.

- ATTENTION -

The centre of gravity of the load may not necessarily be at the centre, you have to therefore work out its position.

Courtesy of Crane.Market

https://truckmanualshub.com/

When the weight to be handled is known, consult the load table (chapter “h“ vehicle technical sheets) and identify the section indicating the weight immediately above.

Example:
in the load table given as an example (fig.15/B), the weight of the load is 0.9 tons; go to the section with the 1.0 tons. (fig.15/B Pos.“A“).

The left-hand border (fig.15/B Pos.“B“) and the upper border (fig.15/B Pos.“C“) of this segment indicate the stability limits of the vehicle relative to the considered load. Do not slant or extend the boom beyond the indicated limits. (fig.15/B Pos.“B-C“).

After insertion of forks from under the load and before lifting them, check indicator values of boom angle (fig.16/B Pos.“1“) and extension (fig.17/B Pos.“1“).

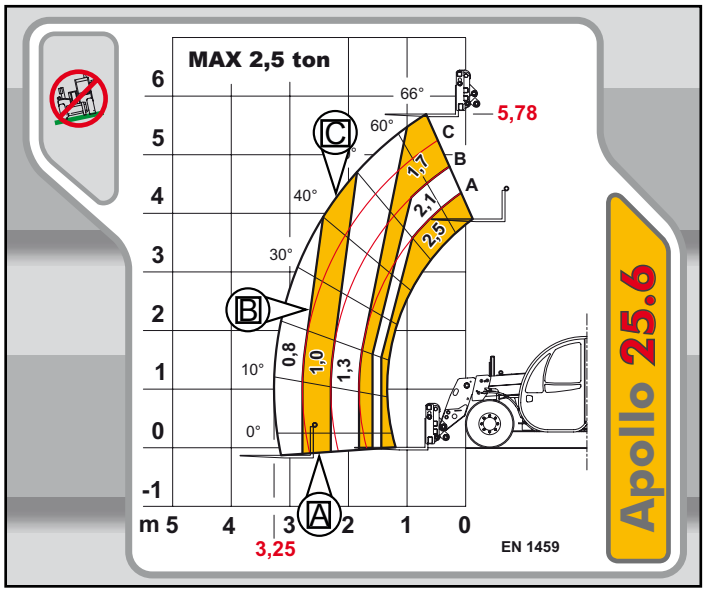

(fig.15/B)

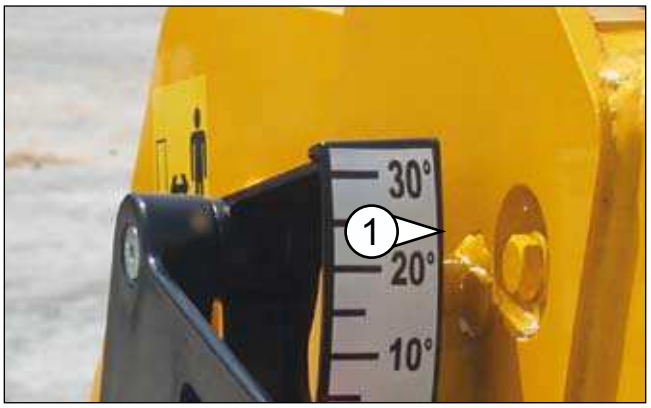

(fig.16/B)

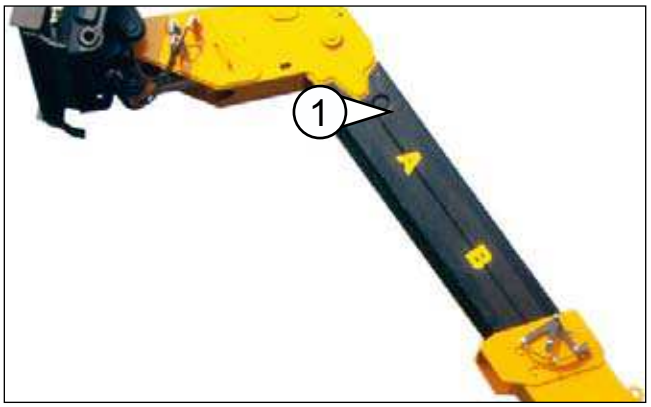

(fig.17/B)

As seen on the table, the lines start from the graduated scale for the angling and extension of the boom and cross the section of the table. Check where the relevant lines for the parameters considered cross. If the cross point is within the maximum load section or to the right (known load weight), the load is within the safety limits.

If the lines cross above or to the left of the section, do not make any attempt to lift the load. Retract the boom.
If, even with the boom completely retracted, the angular and extension values of the boom intersect outside of the maximum load section, do not attempt to lift the load.

When the load is on the forks, retract the boom before lifting or lowering it. This will reduce the risk of the vehicle becoming unstable.

When the load is raised (for example, on a scaffolding) it should be let go (raise it) before retracting the boom completely.

Before depositing a load, check the load table to determine the maximum distance of the vehicle from the point of unloading. It should be possible to deposit the load without intersecting the limits indicated to the left or above the maximum load section.

Courtesy of Crane.Market

https://truckmanualshub.com/

Note-book with essential data
(Fig.18/B - Pos."1")

- A : cover page
- B : gear change page
- C : tyre inflation pressure page
- D : main safety regulation page
- E : driving on roads page
- F : symbol key (front)
- G : symbol key (back)
- H : load charts

- ATTENTION -

Tables illustrated are only an indication and may not correspond to those found inside the note pad in the cab.

(fig.18/B)

A : cover

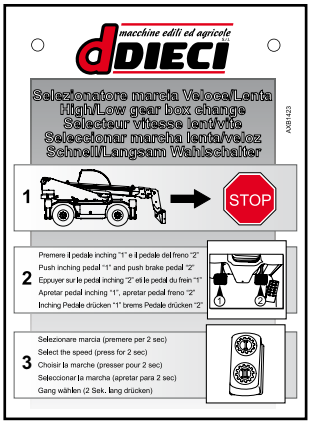

B : speed selection

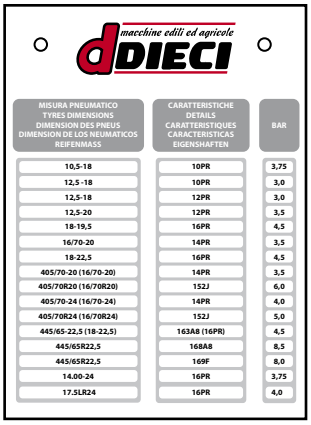

C : tyre inflation pressure

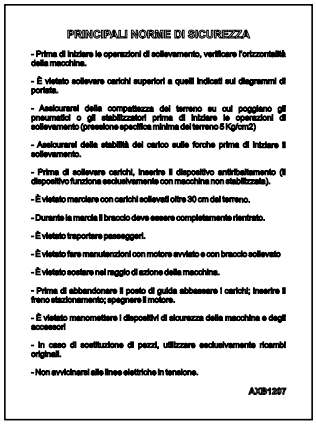

D : main safety regulations

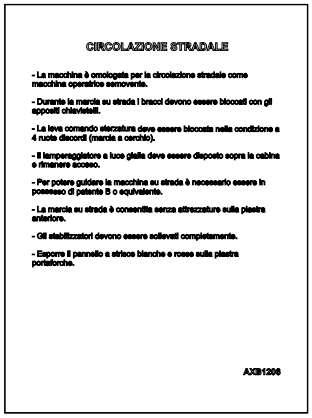

E : road travel

F : symbol key

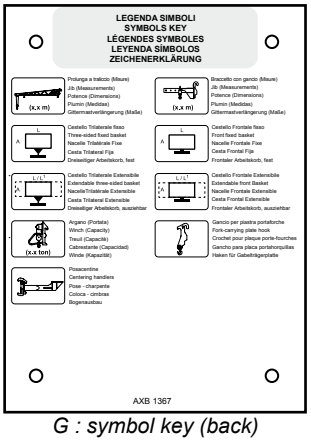

G : symbol key (back)

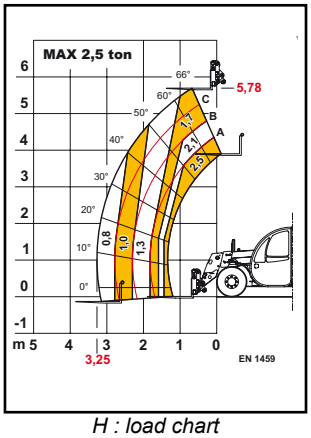

H : load chart

Courtesy of Crane.Market

https://truckmanualshub.com/

macchine edili ed agricole

dDIECI

Courtesy of Crane.Market

https://truckmanualshub.com/

LOAD HANDLING

Picking a load up from the ground

1. Slowly approach the load to be lifted with the boom completely retracted and the forks horizontally positioned at the height of the lifting position.
   Keep forks raised just enough to avoid contact with the ground.

2. Bring forks under load to be lifted until contact is made with the fork holding plate. Engage the parking brake and move the gear selector to neutral.

3. Slightly lift up the load and tilt the fork holding plate backwards, bringing it to the transport position.

- ATTENTION -

Always respect the load's centre of gravity, slant the forks just enough to ensure stability and prevent load loss during braking.

- ATTENTION -

Never transport a load with the boom raised and/or extended

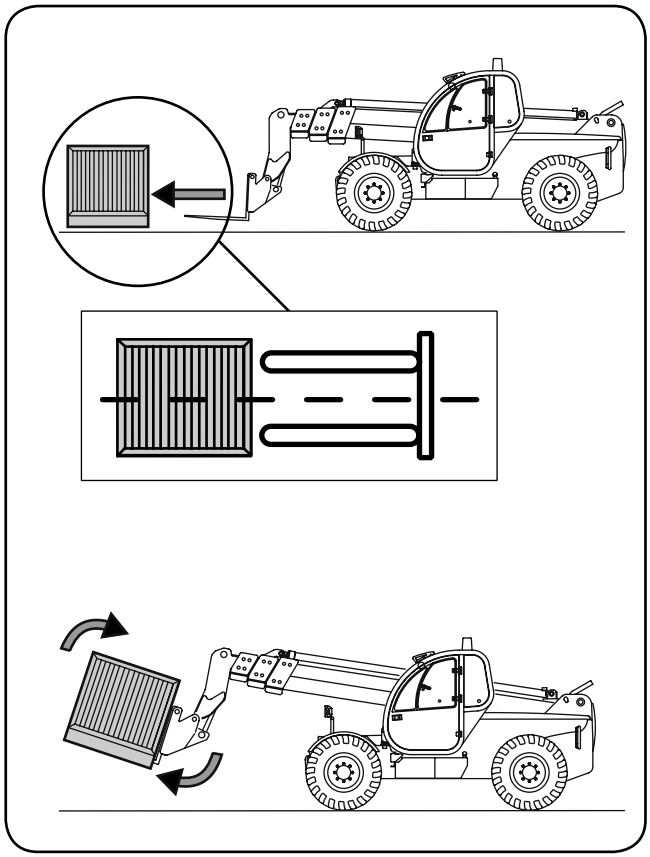

Courtesy of Crane.Market

https://truckmanualshub.com/

Lifting loads from high up

1. Ensure the forks can be easily inserted under the load.
2. Slowly and cautiously drive the machine perpendicularly towards the load with horizontal forks.
3. Always remember to maintain the distance necessary to insert the forks under the load between the pile and the machine. Extend the boom over the shortest possible length.
4. After inserting the forks under the load so that contact is made with the fork holder plate, engage the parking brake and shift the gear selector to neutral.
5. Raise the load slightly and tilt the fork holder plate backwards into the carrying position.
6. If possible, lower the load without moving the machine. Raise the boom to distance the load, then retract the extensions and position the load in the carrying position.
7. If it is not possible to reverse the machine very slowly and with the utmost care, after adequately distancing the load, retract the extensions and lower the boom to position the load in the carrying position.

- ATTENTION -

Always comply with the centre of gravity of the load, tilt the forks enough to ensure stability and to avoid dropping the load when braking.

- PROHIBITION -

IT IS STRICTLY FORBIDDEN TO PICK UP A LOAD IF THE MACHINE IS NOT LEVEL.

- ATTENTION -

Never carry loads while the boom is raised and/or extended.

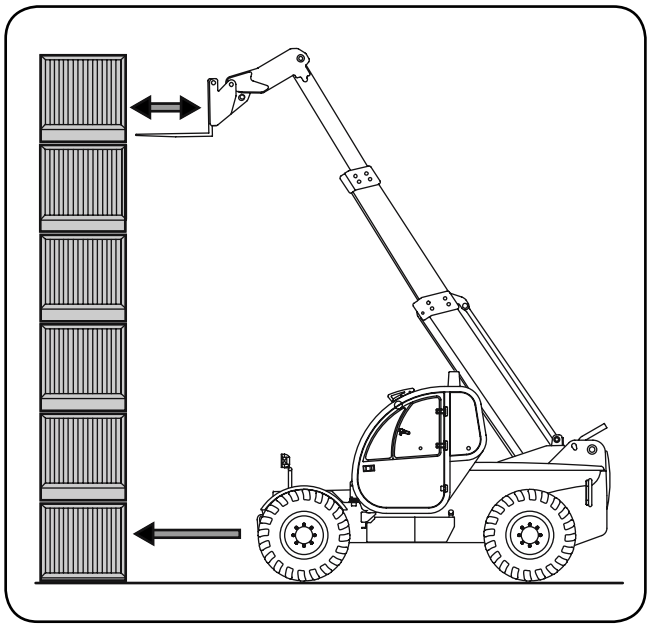

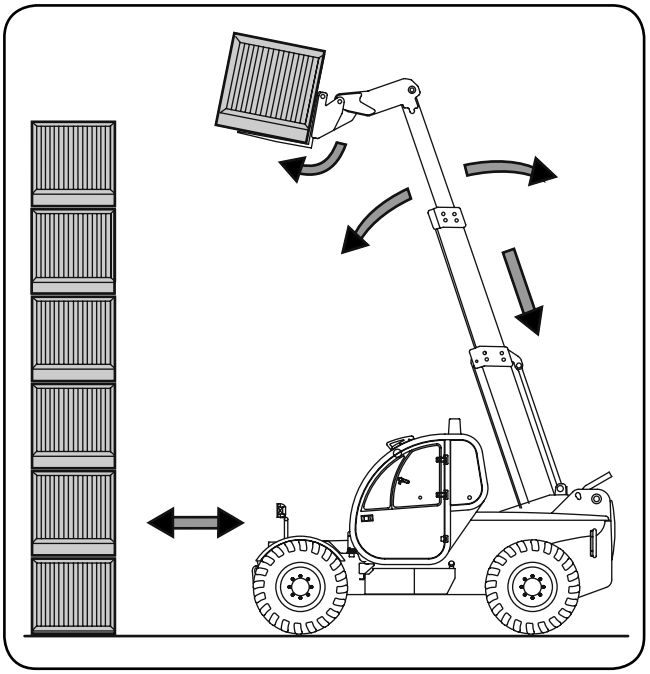

Courtesy of Crane.Market

https://truckmanualshub.com/

Placing loads in high places

1. Place the load in the carrying position in front of the pile.
2. Raise and extend the boom until the load is above the pile. If necessary, advance the machine towards the pile very slowly and with the utmost care.
3. Engage the parking brake and shift the gear selector to neutral,
4. Position the load horizontally and place on top of the pile, lower and retract the extensions to position the load correctly.
5. Release the forks by alternately retracting the extensions and raising the boom; if possible reverse the machine very slowly and with the utmost care.

- ATTENTION -

Always comply with the centre of gravity of the load, tilt the forks enough to ensure stability and to avoid dropping the load when braking.

- PROHIBITION -

IT IS STRICTLY FORBIDDEN TO PICK UP A LOAD IF THE MACHINE IS NOT LEVEL.

- ATTENTION -

Never carry loads while the boom is raised and/or extended.

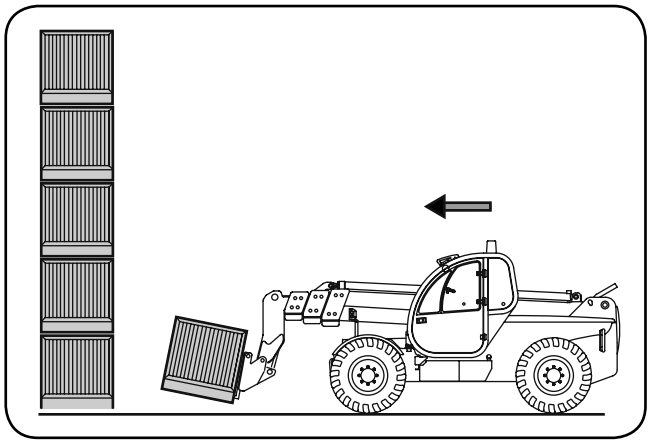

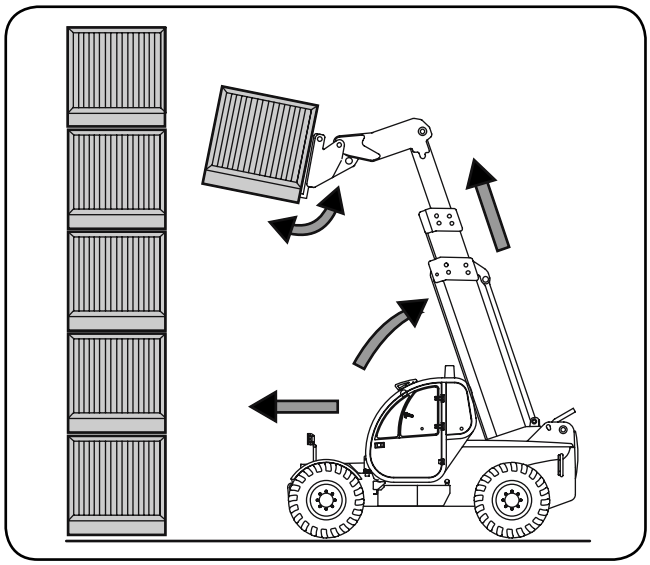

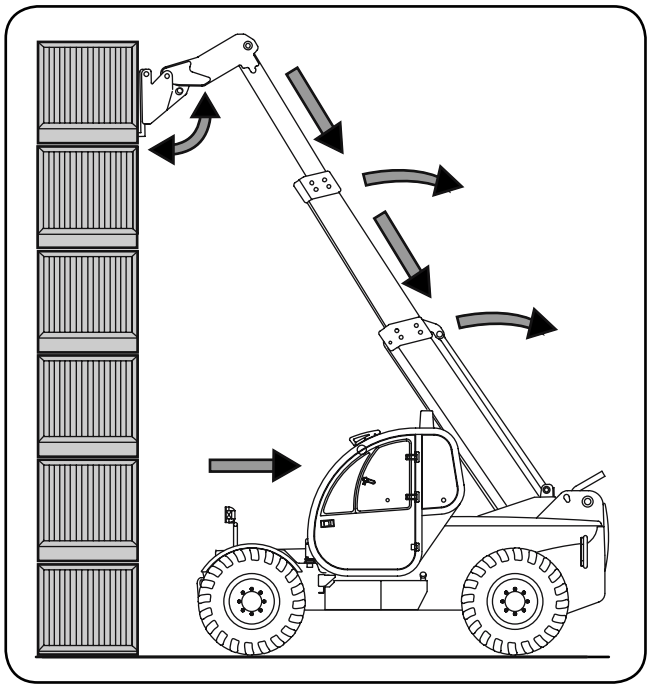

Courtesy of Crane.Market

https://truckmanualshub.com/

Picking up round-shaped loads

- Tilt the forks forward and detract the telescopic boom. At the same time, place the forks under the load, and turn the fork holding plate backwards in order to slide the load. If necessary, secure the load with wedges.

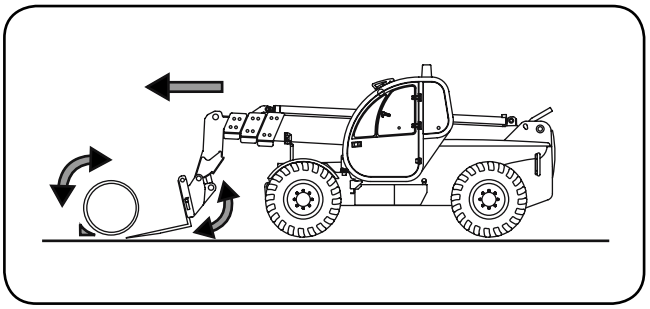

- ATTENTION -

Always respect the load's centre of gravity, slant the forks just enough to ensure stability and prevent load loss during braking.

- ATTENTION -

Never transport a load with the boom raised and/or extended

Courtesy of Crane.Market

https://truckmanualshub.com/

SAFETY STICKERS

Safety stickers have been applied to the machine in the indicated positions. The aim of the safety stickers is to provide a guide for your and others' safety. Before using the machine, check the contents and position of the stickers by walking around the machine with this manual in your hands. Re-examine the stickers with every operator who is to use the machine.

- Ensure you fully acknowledge where they are located and understand their contents.
- To ensure the stickers are easy to read and comprehend, check they are in the correct position and that they are always kept clean. **IT IS STRICTLY FORBIDDEN** to clean the signs on the machine with solvents or petrol; the stickers may become unstuck. Additional stickers to the warning and safety stickers must always be treated in the same way.
- If the stickers deteriorate, become damaged or are lost, replace them because they must be legible and understood correctly. Orders for stickers must be placed using the same process as for spare parts (ensure you include the model and serial number of the machine when you place your order).
- In case of doubt, please consult your agent or dealer.

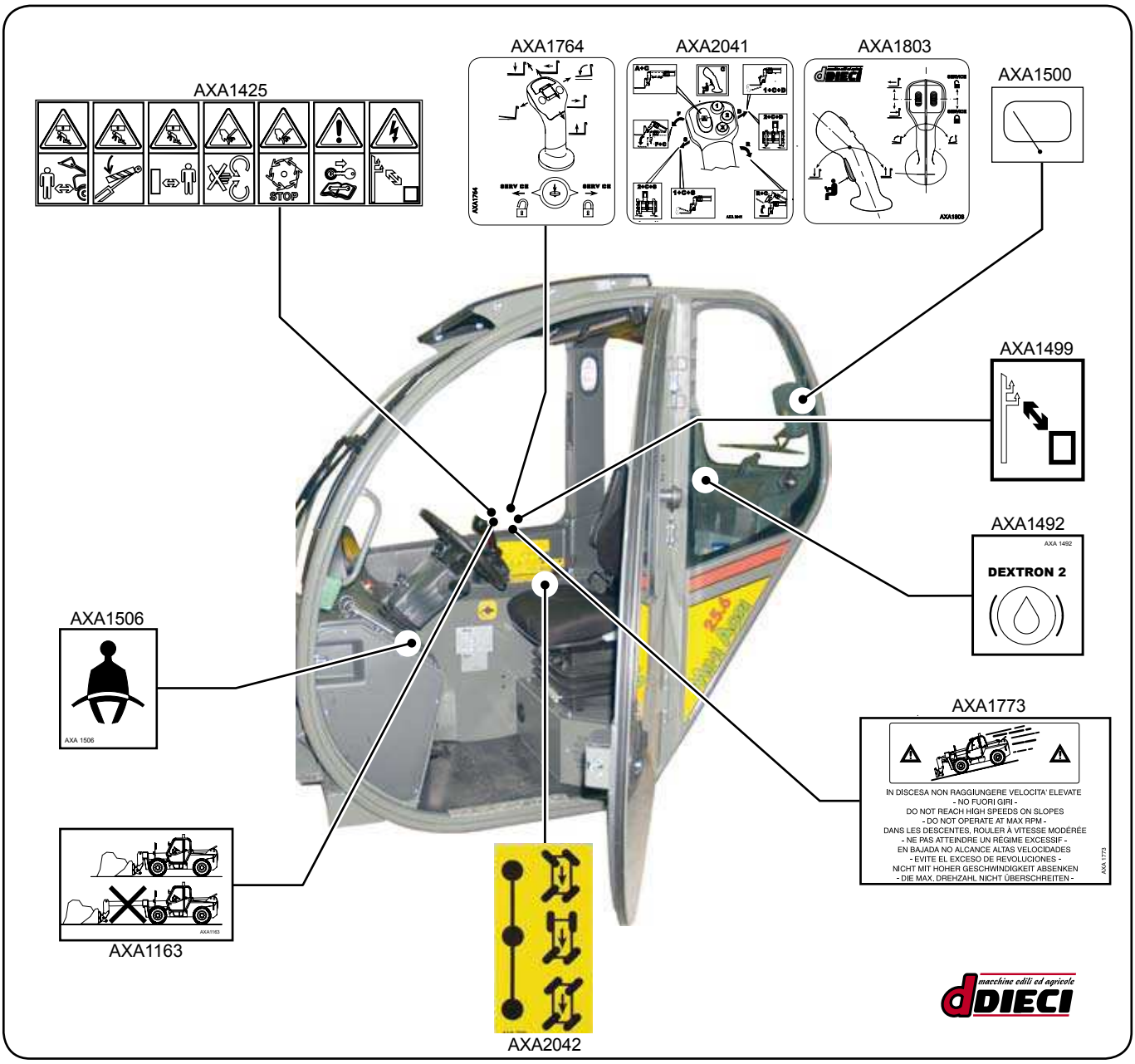

Courtesy of Crane.Market

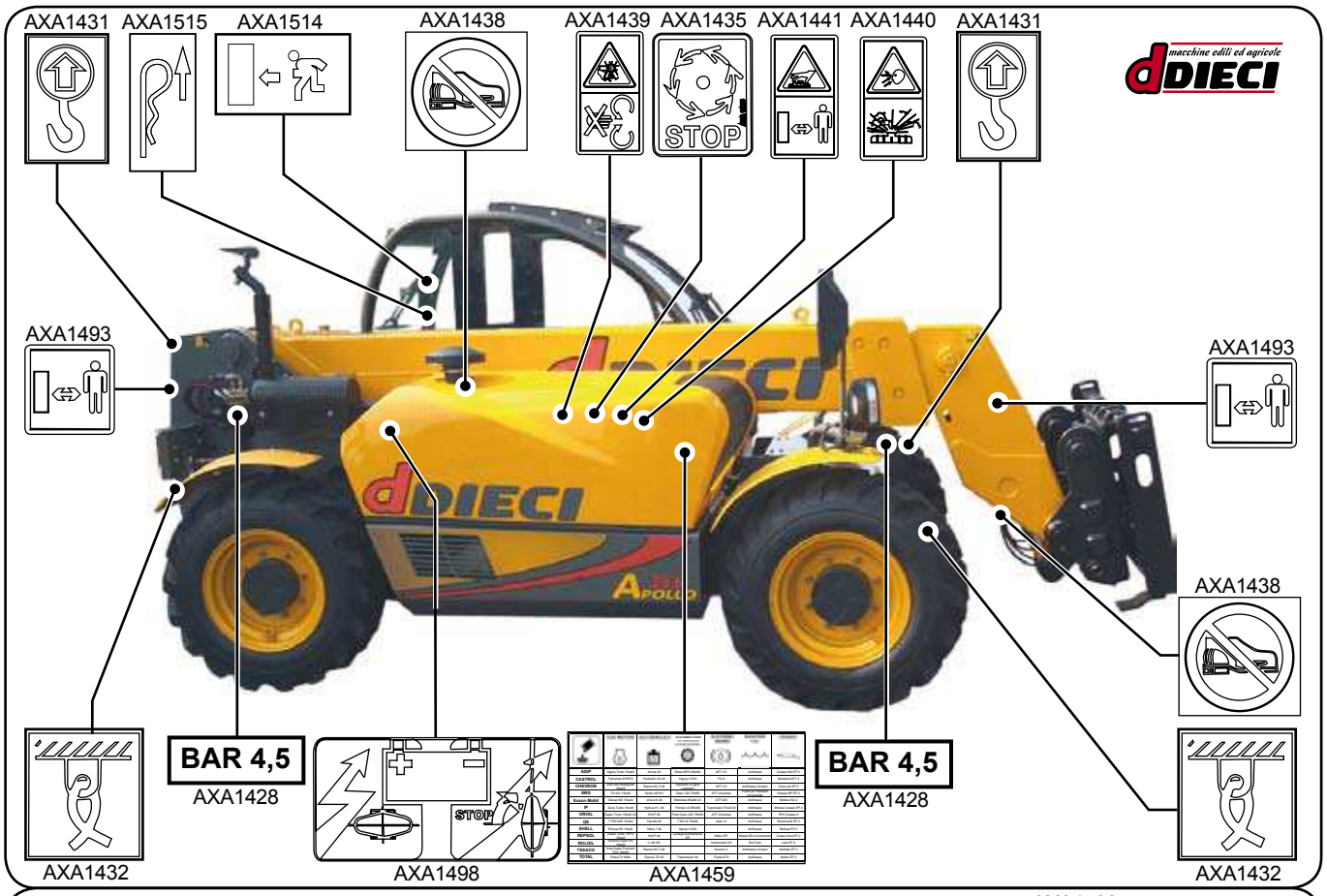

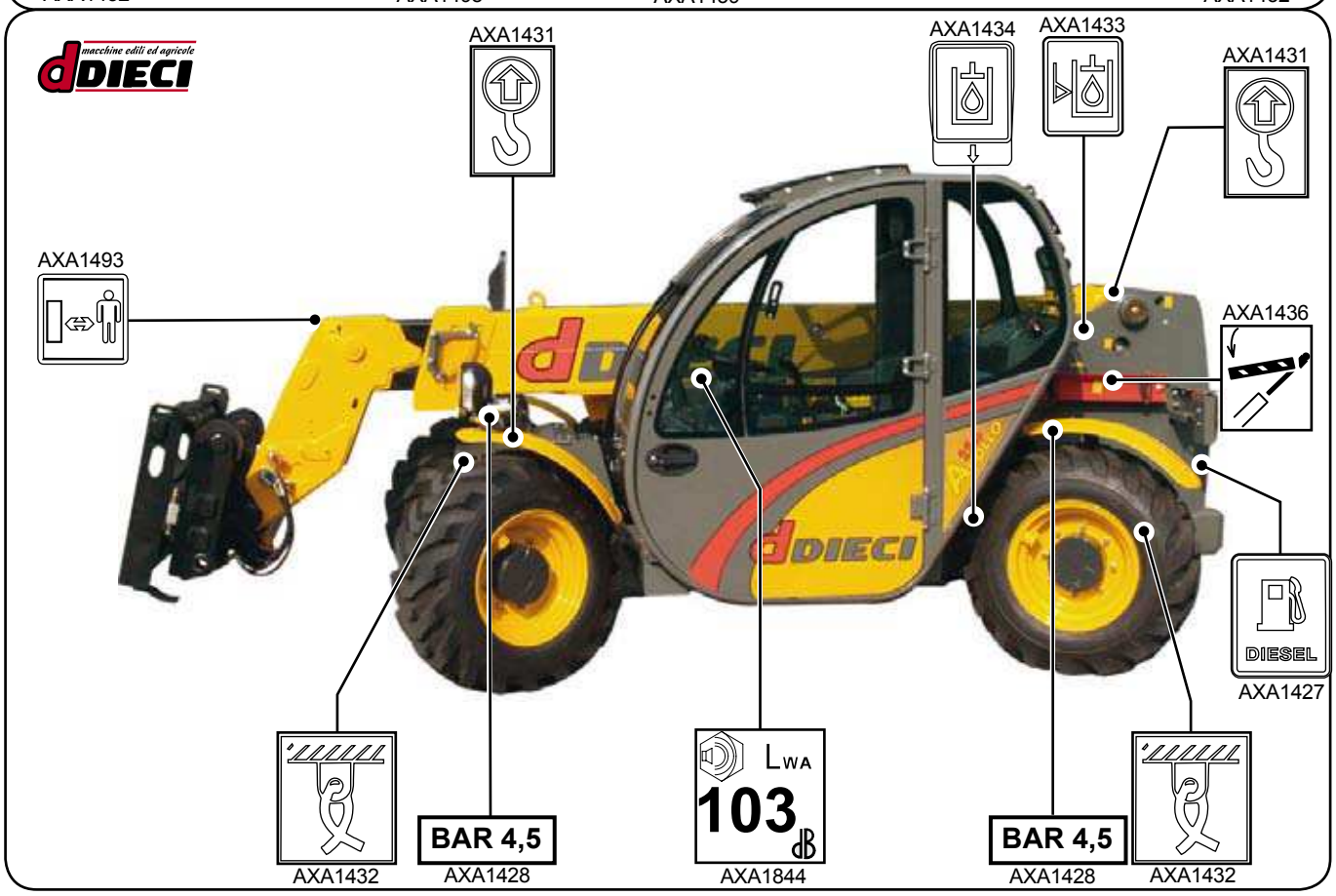

Courtesy of Crane.Market

https://truckmanualshub.com/

safety stickers and their location

- **Located in the cab on the right hand side window** (fig.28/B):

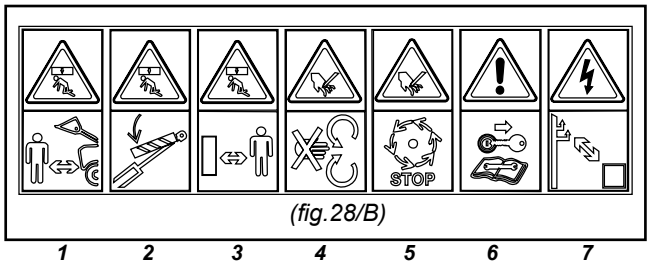

(fig.28/B)

1 2 3 4 5 6 7

- *DANGER* (1)

Keep all persons at a safe distance from the vehicle when starting loading operations.

- *DANGER* (2)

When carrying out maintenance work, block all hydraulic cylinders using safety locks.

- *DANGER* (3)

Keep all persons at a safe distance.

- *DANGER* (4)

Do not open or remove the safety panels while the engine is running.

- *DANGER* (5)

Wait until all moving parts have come to a halt.

- *DANGER* (6)

Switch off the engine and remove the key before starting maintenance work.

- *DANGER* (7)

Check the work zone and keep far away from power supplies.

- **On the engine compartment radiator**(fig.29/B)

(fig.29/B)

8

(fig.30/B)

9 - 10

- *DANGER* (8)

Steam and hot water under high pressure. Protect the face. Remove the cap with due caution.

On the side of the intercooler radiator (fig.30/B)

- *DANGER* (9)

Risk of burns.

- *DANGER* (10)

Keep all persons at a safe distance.

- **On the side of the intercooler radiator** (fig.31/B)

(fig.31B)

11 - 12

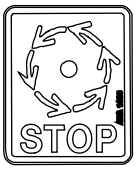

(fig.32/B)

13

- *DANGER* (11)

Do not open or remove the safety panels while the engine is running.

- *DANGER* (12)

Wait until all moving parts have come to a halt.

- **On the side of the intercooler radiator** (fig.32/B)

- *DANGER* (13)

Do not open; wait until all moving parts have come to a stop.

Courtesy of Crane.Market

https://truckmanualshub.com/

Stickers for use and maintenance

- **On the rear window** (fig.34/B)

Indicates the direction of clip extraction hindering total opening of the window

- **On the rear window** (fig.35/B)

Indicates the emergency exit

- **Under the steering wheel** (fig.36/B)

Indicates the obligation to fasten seat-belts when using the vehicle.

- **On the side of the brake oil tank** (fig.37/B)

Indicates the type of oil used in the brake system.

- **On the chassis** (fig.38/B)

Shows the 4 places where the vehicle can be anchored if it should need to be lifted.

- **Under the chassis** (fig.39/B)

Shows the 4 places where the vehicle can be towed or anchored for transportation.

- **On the parts not to be stepped on** (fig.40/B)

- DANGER

Keep off "danger of breakage".

- **On the fuel tank** (fig.41/B)

Type of fuel to be used.

- **On the side of the hydraulic oil tank** (fig.42/B)

Indicator for hydraulic oil level.

- **On the side of the hydraulic oil tank** (fig.43/B)

Marks the cap to top up the hydraulic oil.

- **Outside the engine bonnet** (fig.44/B)

- **On the 4 fenders** (fig.45/B)

Indicates the recommended tyre pressure.

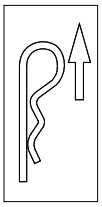

(fig.34/B)

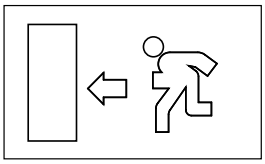

(fig.35/B)

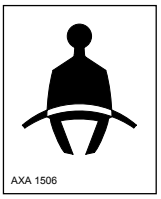

(fig.36/B)

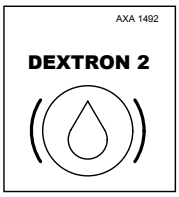

(fig.37/B)

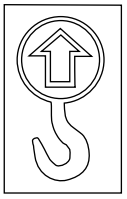

(fig.38/B)

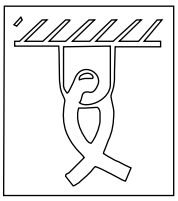

(fig.39/B)

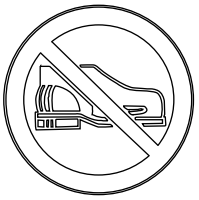

(fig.40/B)

(fig.41/B)

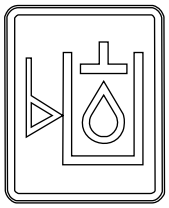

(fig.42/B)

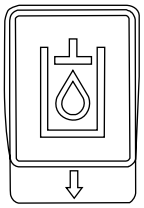

(fig.43/B)

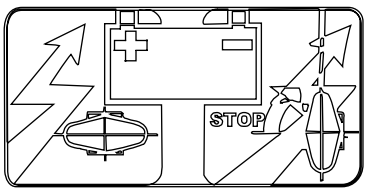

(fig.44/B)

BAR 4,5

(fig.45/B)

Courtesy of Crane.Market

https://truckmanualshub.com/

Courtesy of Crane.Market

https://truckmanualshub.com/

GETTING TO KNOW AND USING THE VEHICLE

C

- ATTENTION: - Read the SAFETY REGULATIONS (contained in this manual) carefully for the safety of all personnel and your vehicle.

Courtesy of Crane.Market

https://truckmanualshub.com/

macchine edili ed agricole

dDIECI

- ATTENTION: - Read the SAFETY REGULATIONS (contained in this manual) carefully for the safety of all personnel and your vehicle.

Courtesy of Crane.Market

https://truckmanualshub.com/

EVERY MODIFICATION MADE TO THE VEHICLE LEADS TO A NEW VERIFICATION OF CONFORMITY WITH THE 2006/42/EC MACHINERY DIRECTIVE THIS PROCEDURE IS ALSO VALID IN THE CASE OF REPAIRS WITH NON-ORIGINAL SPARE PARTS.

IT IS PROHIBITED TO OPERATE IF THIS MANUAL HAS NOT BEEN READ AND UNDERSTOOD.

THE OPERATOR IS REQUIRED TO LEARN THE LOCATION AND FUNCTION OF ALL INSTRUMENTS AND CONTROLS, INDEPENDENT OF HIS OR HER EXPERIENCE IN THE FIELD, BEFORE OPERATING THE VEHICLE.

THE IMAGES, DESCRIPTIONS, MEASUREMENTS STATED IN THIS CHAPTER REFER TO STANDARD VEHICLES.

ALL FUNCTIONS AND PROCEDURES CONCERNING THE OPERATION AND MOUNTING OF THE VEHICLE'S ATTACHMENTS THAT ARE NOT DESCRIBED IN THIS MANUAL ARE STRICTLY FORBIDDEN.

USE OF THE VEHICLE DIFFERENT TO THAT DESCRIBED IN THIS MANUAL IS PROHIBITED.

IT IS MANDATORY TO HAVE READ AND LEARNED CHAPTER "B" (SAFETY STANDARDS) BEFORE READING CHAPTER "C" AND USING THE VEHICLE.

macchine edili ed agricole dDIECI

- ATTENTION: - Read the SAFETY REGULATIONS (contained in this manual) carefully for the safety of all personnel and your vehicle.

Courtesy of Crane.Market

https://truckmanualshub.com/

GENERAL WARNINGS

- ATTENTION

The operator must only operate vehicle and its commands when properly seated in the driver's seat.

- ATTENTION

The telescopic lift described in this manual cannot be used in closed spaces or anywhere where there might be explosive gases. To operate in closed spaces, the Manufacturer must be contacted so that the necessary modifications can be made to the vehicle.

- ATTENTION

Working on a slope may be dangerous. The conditions of the terrain may vary according to climatic conditions (e.g. rain, snow, ice). Therefore, pay careful attention to the conditions of the terrain on which the vehicle is being used; the use of low speeds is recommended.

- ATTENTION

When transporting a load on a gradient, the load should be kept up gradient with respect to the vehicle in order to increase its stability. Before mounting ramps or trailers with the vehicle, remove any mud, ice or oil which may cause accidents.

- ATTENTION

Proceed with due caution on loose, wet or muddy surfaces.

- ATTENTION

Lack of efficient or clear communication may cause serious accidents. If you are working with others, make sure any hand signals you intend to use are understood by everybody. Since work sites are often very noisy, do not exclusively rely on verbal communication.
For indications on the hand signals to use, refer to the following chapter

- PROHIBITED

IT IS PROHIBITED to use the vehicle's moveable hydraulic parts to lift people, with exception of the uses for which the vehicle is intended.

- ATTENTION

Before operating the moveable hydraulic parts of the vehicle, ensure the surrounding area is clear.

- ATTENTION

The vehicle should be used exclusively by competent, authorised personnel who have thoroughly read this manual and have been adequately trained as reported in chapter B "General warnings". If the vehicle is to be used on roads, the operator must have a valid, category B driver's licence, or higher in accordance with Italian law.

- ATTENTION

Do not use the vehicle if you are under the effect of alcohol, drugs or if you have taken medication that may make you drowsy or alter your reflexes.

- ATTENTION

Before operating the vehicle or before carrying out complicated or dangerous manoeuvres, it is essential that you practice in an empty, unobstructed part of the site.

- ATTENTION

Clear, simple symbols are located near all controls for convenience purposes and to make them easier to understand for the operator.

- ATTENTION

When diagonal steering has been selected, always proceed at a low speed.

- ATTENTION

Should any potentially hazardous parts be damaged, stop the vehicle immediately. Do not resume operation of the vehicle until the problem has been resolved.

- ATTENTION

Tyres which are over inflated or overheated may explode: Follow the instructions provided in this manual for correct tyre inflation. Do not weld or cut the rims; repair work should only be carried out by a qualified tyre repair shop.

- ATTENTION

The boom should not be left raised for an extended period of time. This may cause the displacement of boom extensions; retract extensions at least once a day.

- ATTENTION: - Read the SAFETY REGULATIONS (contained in this manual) carefully for the safety of all personnel and your vehicle.

Courtesy of Crane.Market

https://truckmanualshub.com/

HAND SIGNALS

Accessories to hand signals:
- The signaller must be easily identified by the operator.
- The signaller must wear or hold one or more adequate recognition elements, like: jacket, helmet, sleeves, bracelets, signal paddles.
- The recognition elements are bright coloured, preferably one, and reserved exclusively for the signaller.

Start Attention Control	The two arms are open horizontally, the palm of the hands forward	
Stop Interruption End of movement	The right arm is stretched upwards, with palm of right hand forward	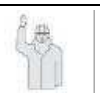
End of operations	The two hands are joint at height of chest	

Lift	The right arm, stretched upwards, with palm of right hand forward, slowly makes a circle	
Lower	The right arm, stretched downwards, with palm of right hand towards the body, slowly makes a circle	
Vertical distance	The hands indicate the distance	

Move forward	Both arms are folded, the palms of the hands backwards; the forearms make slow movements towards the body	
Move backwards	Both arms are folded, the palms of the hands forward; the forearms make slow movements away from the body	
To the right compared to signaller	The right arm, stretched horizontally, with palm of right hand downwards, slowly makes small movements towards	

To the left compared to signaller	The left arm, stretched horizontally, with palm of right hand downwards, slowly makes small movements towards	
Horizontal distance	The hands indicate the distance	

Danger Stop or emergency stop	Both arms stretched upwards	
Quick movement	The conventional signals used to indicate movements are quickly made	
Slow movement	The conventional signals used to indicate movements are made very slowly	

- ATTENTION: - Read the SAFETY REGULATIONS (contained in this manual) carefully for the safety of all personnel and your vehicle.

Courtesy of Crane.Market

https://truckmanualshub.com/

IDENTIFYING THE VEHICLE PARTS

Right side of vehicle

1. Cab
2. Telescopic boom
3. Right rear view mirror
4. Right front light
5. Attachment holding plate
6. Epicycloidal reduction gear
7. Wheel
8. Engine bonnet
9. Right rear light

Left side of vehicle

1. Cab
2. Left rear light
3. Epicycloidal reduction gear
4. Fuel tank
5. Wheel
6. Attachment holding plate
7. Left front light
8. Telescopic boom
9. Left rear view mirror
10. Courtesy compartment.

- ATTENTION: - Read the SAFETY REGULATIONS (contained in this manual) carefully for the safety of all personnel and your vehicle.

Courtesy of Crane.Market

https://truckmanualshub.com/

External cab components

1. Left rear view mirror.
2. Front windscreen wipers.
3. Cab door.
4. Upper door window.
5. Door handle.
6. Rear window / emergency exit.
7. Rear windscreen wiper.
8. Revolving light outlet.

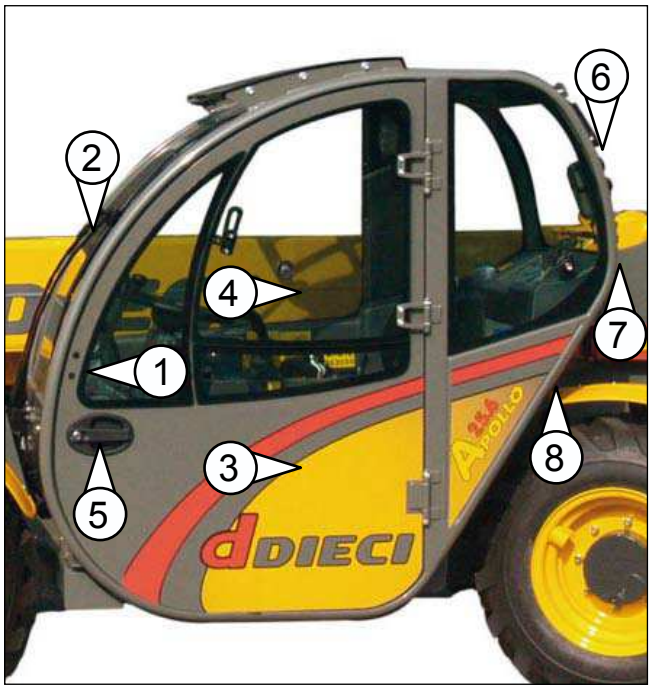

Internal cab components

1. Seat.
2. Door handle.
3. Upper window handle.
4. Courtesy compartment document holder pocket.
5. Vehicle identification plate.
6. Cab up/down handhold.
7. Steering wheel.
8. Dashboard.
9. Joystick.
10. Interior cab lighting

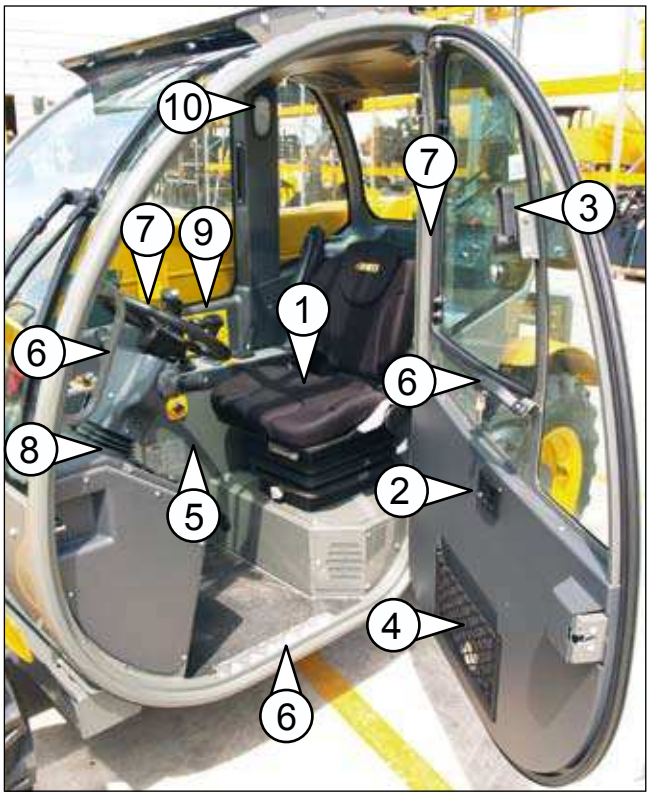

- ATTENTION: - Read the SAFETY REGULATIONS (contained in this manual) carefully for the safety of all personnel and your vehicle.

Courtesy of Crane.Market

https://truckmanualshub.com/

GETTING IN AND OUT OF THE DRIVER'S CAB

Before entering the cab, make sure that your hands and shoes are clean and dry to prevent slipping and falling. Only use the handles provided (fig.1/C Pos."1", "2", "3") to climb into the cab; do not use controls or steering wheel located on the inside. Always face the cab when getting in or out of the vehicle.

***- ATTENTION*:**

Only get in and out of the cab when the vehicle is stopped and the parking brake is engaged. Do not carry out maintenance on a moving vehicle.

(fig.1/C)

DOOR OPENING CONTROLS

The cab door is equipped with an external locking handle (fig.2/C Pos."1").

To open the door:

- Insert the key into the lock (fig.2/C Pos."2") and turn clockwise/counter-clockwise to engage/disengage the lock.
- Press the button (fig.2/C Pos."2") and pull the handle toward you to unhook the door with the lock disengaged.

NOTE:
The door will not open if the door pushbutton is pushed when the lock is engaged.

- PROHIBITION -

Operating the vehicle with the cab door open IS STRICTLY PROHIBITED.

***- ATTENTION*:**

Before pushing the door outward, make sure that the surrounding area is free of obstacles.

(fig.2/C)

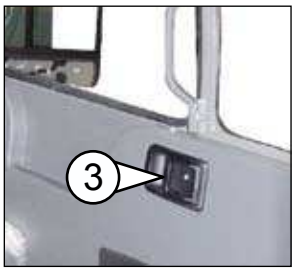

INTERNAL DOOR OPENING CONTROLS

- Pull the handle toward you to release the door (fig.2/C Pos."3").
- Push the door outwards to complete opening.

***- ATTENTION*:**

Before pushing the door outward, make sure that the surrounding area is free of obstacles.

- ATTENTION: - Read the SAFETY REGULATIONS (contained in this manual) carefully for the safety of all personnel and your vehicle.

Courtesy of Crane.Market

https://truckmanualshub.com/

OPENING THE DOOR WINDOW
(fig.3/C Pos.”1”)

- Lower the handle to open (fig.3/C Pos.”4”), turning it counter-clockwise and pushing the window outward.
- To block the window in the permanent open position, push the window pin (fig.3/C Pos.”1”) inside the pin lock (fig.3/C Pos.”2”), using slight pressure.
- Turn the handpiece from inside the cab (fig.3/C Pos.”3”) to unlock the window and then close it.
- To close the window, pull it toward you, returning it to its original position.
- Turn the hand grip clockwise to lock the window in the closed position.

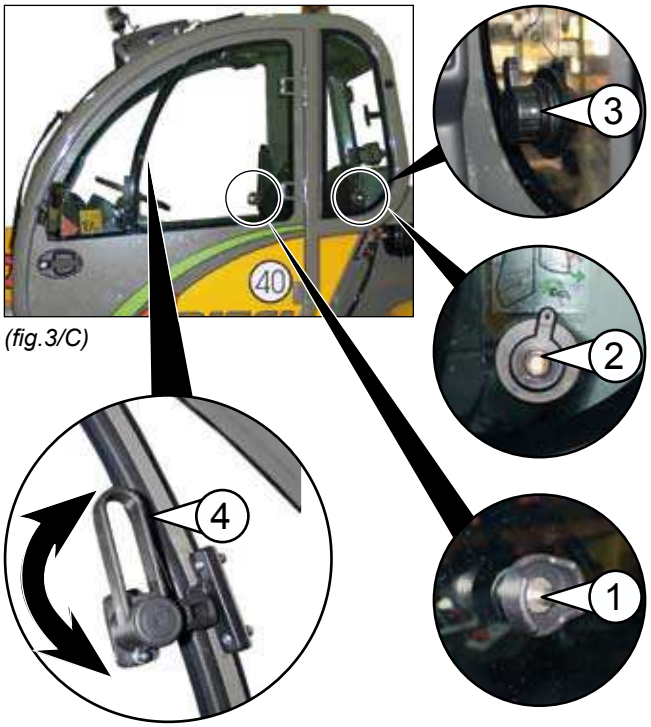

(fig.3/C)

- *ATTENTION*:

Before opening or closing the window, verify that the surrounding area is free of obstacles.

- *ATTENTION*:

Before operating, make sure that the door window is locked, independent of whether it is in the open or closed position.

REAR WINDOW
(fig.4/C Pos.”1”)

- To open, pull the handle (fig.4/C Pos.”2”) and push the window outwards.

The window will remain in the open position by the handle itself.

- *ATTENTION*:

In the event the handle no longer blocks the window in the open position, replace it as soon as possible; risk of crushing.

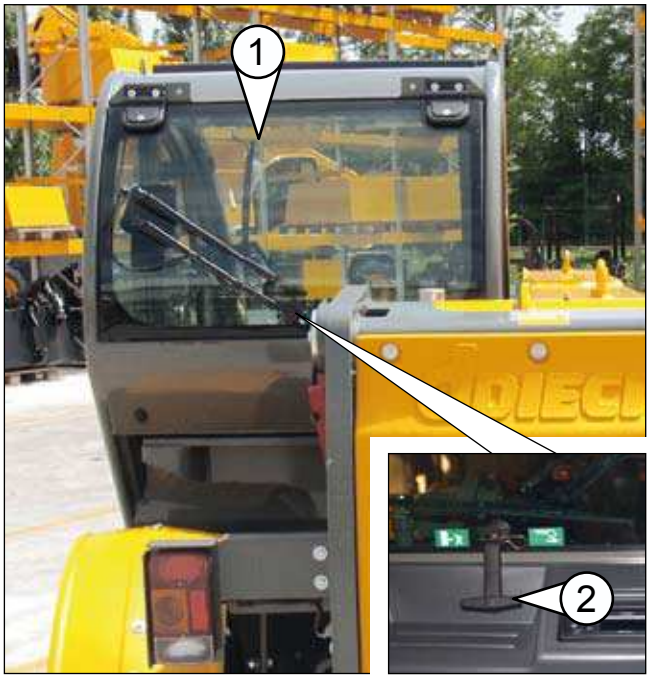

(fig.4/C)

Courtesy of Crane.Market

https://truckmanualshub.com/

REAR EMERGENCY EXIT
(Fig.6/C pos."1")

The emergency exit is identified and marked on the rear window.

- In case the window must be opened completely, slide out the locking pin (fig.6 /C Pos."2") and push the window outward.

The pin must be kept in position as shown during normal working operations.

- *PROHIBITION*:

Opening the window completely during use of the vehicle **IS STRICTLY PROHIBITED**, due to possible shearing hazards between boom and chassis.
The rear window is found near the telescopic boom.

- *ATTENTION*:

Use care when opening and/or removing windows as they may chip or shatter, creating risk of injury to the operator in the cab and to those in the surrounding area. Take proper precautions and use accident prevention equipment (goggles, gloves, helmet, etc.).

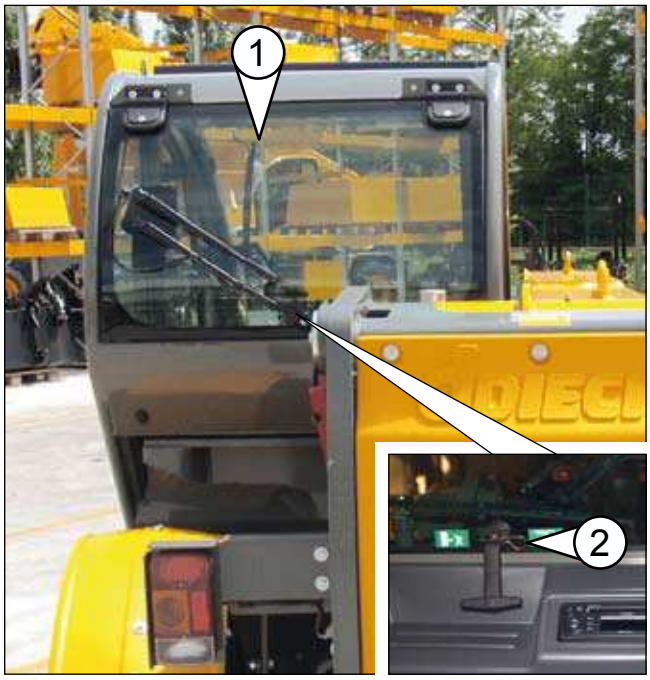

(fig.6/C)

MAX POWER 180W
(fig.7/C Pos."1")

- Power 12v 180w for direct current users (battery chargers, cell phones, etc.)

- *ATTENTION*:

Do not connect users with nominal voltage exceeding 12 volts and power consumption exceeding 180W.
Danger of damage to the electrical system.

(fig.7/C)

INTERNAL CAB LIGHT
(fig.8/C Pos."1")

- Press the upper and lower edges of the ceiling light to switch the light on/off. The light switches on in intermediate position.

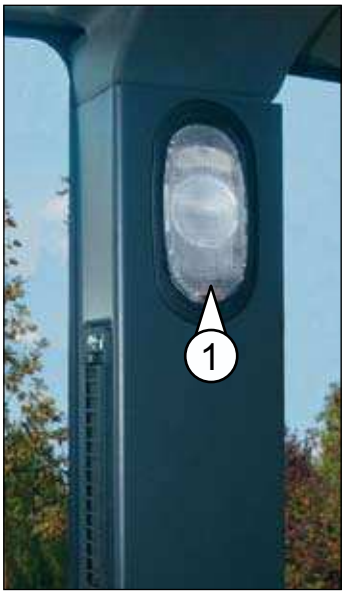

(fig.8/C)

- ATTENTION: - Read the SAFETY REGULATIONS (contained in this manual) carefully for the safety of all personnel and your vehicle.

Courtesy of Crane.Market

https://truckmanualshub.com/

COURTESY COMPARTMENT
(fig.10/C Pos.”1”)

TECHNICAL DOCUMENTATION POCKET
(fig.10/C Pos.”2”)

Technical documents must be kept in their pocket located on the internal side of the cab entry door (fig.10/C Pos.”2”). The use and maintenance manual and the parts catalogue must always be available inside the vehicle for quick reference.

- *ATTENTION*:

The user’s manual and the parts catalogue are an integral part of the vehicle and must always be kept with it, even when it is sold. The manual must be carefully kept aboard the vehicle for a quick reference and it must be written in the operator’s language. If the manual is creased, partially damaged or is not legible, replace it immediately.

(fig.10/C)

STEERING WHEEL (adjustment)
(fig.11/C pos.”1”)

To adjust the steering wheel:

- Turn lever “2” (fig.11/C) toward the front of the vehicle to release movement.
- Push or pull the steering wheel to reach the desired position.
- Turn handle “2” (fig.11/C) toward you to lock the steering wheel in the desired position. Screw in with force to lock completely.

Pull lever “2” (fig.11/C) to the right and turn it, in case, in the locked position, its position disturbs operation.

- *ATTENTION*:

The steering wheel is correctly adjusted when the operator, with his/her back resting against the back of the seat, is able to take hold of the furthest part of the steering wheel with his/her elbows slightly bent.

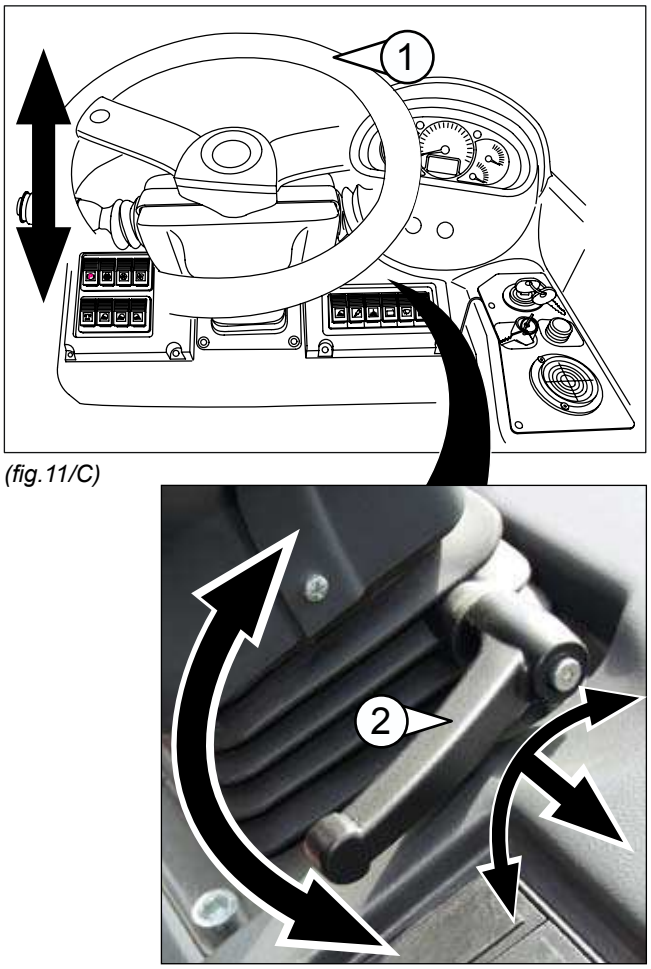

(fig.11/C)

Courtesy of Crane.Market

https://truckmanualshub.com/

SEAT
(Fig.12/C)

DIECI supplies different seat models depending on client requirements. The vehicle is equipped with a safety system called “man in” which uses an electrical micro switch in the driver’s seat. This micro switch is located inside the seat cushion (fig.12/C Pos.”A”).

The engine can only be started if the operator is properly seated in the driver’s seat and the forward/reverse lever is in the neutral “N” position.

(fig.12/C)

Seat adjustment
(Fig.13/C)

The seat can be adjusted to different positions:

A - Lock/unlock springing (horizontal/vertical) (fig.13/C).

B - Adjustment of pneumatic springs (optional) (fig.13/C).

C - Manual spring adjustment (optional) (fig.13/C).

D - Longitudinal seat positioning (fig.14/C).

E - Adjustment of backrest inclination (fig.14/C).

F - Armrest positioning (fig.14/C).

- To unlock springs (horizontal/vertical) bring lever “A” (fig.13/C) toward the front of the vehicle.
  Bring lever “A” (fig.13/C) toward the rear of the vehicle to lock springs.

- To adjust the pneumatic spring rate, pull pin “B” (fig. 13/C) to let out pressure and soften suspension.
  Push pin ”B” (fig.13/C) to increase pressure and harden suspension.

- Manual adjustment of the spring rate is obtained by rotating lever “C” (fig. 13/C) toward the symbol “+” printed on it to harden suspension.
  Turn lever ”C” (fig.13/C) toward the symbol “-” printed on it to soften suspension.

- For longitudinal seat adjustment, move lever “D” (fig.14/C) toward the left side of the vehicle by sliding along the runners.
  Release the lever when the desired position has been reached.
  Move slightly in order to make sure that the locking pin is positioned correctly in its housing.

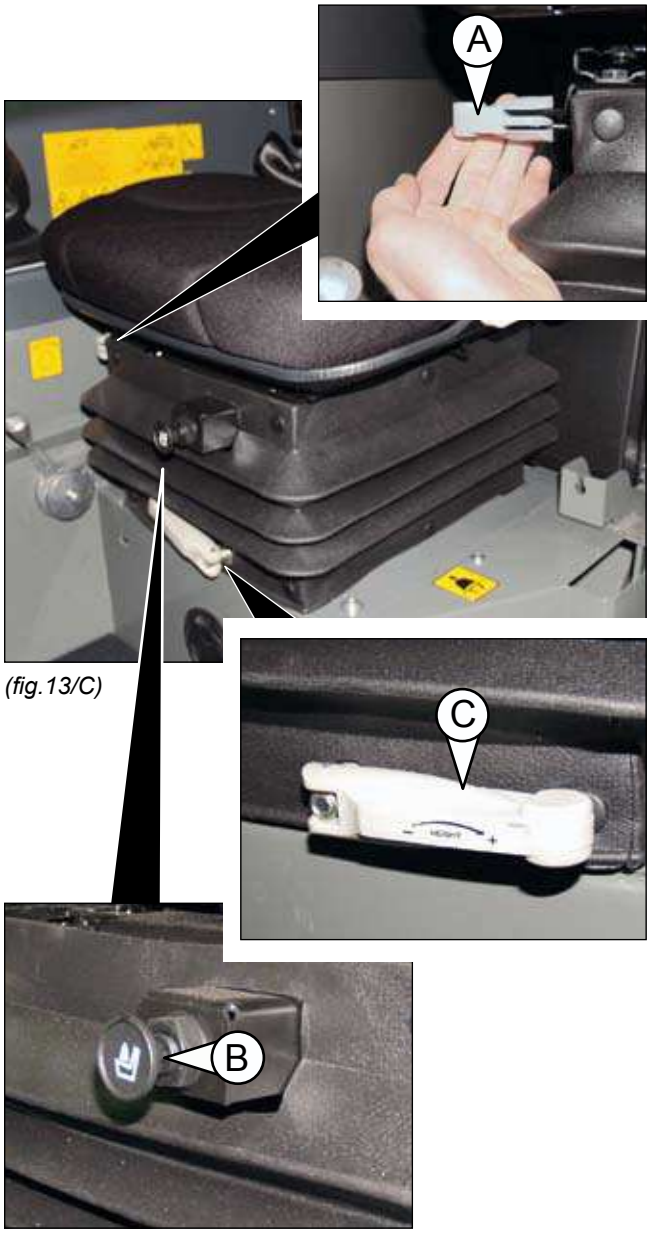

(fig.13/C)

- ATTENTION: - Read the SAFETY REGULATIONS (contained in this manual) carefully for the safety of all personnel and your vehicle.

Courtesy of Crane.Market

https://truckmanualshub.com/

- To adjust backrest inclination, move lever “E” (fig.14/C) and push back on the backrest. The backrest will automatically adapt to the Operator’s body.
- The armrest can be completely raised or lowered using a circular movement that involves the whole armrest (fig.14/C).

- *ATTENTION*:

The seat has been correctly positioned when the operator is able to push the brake pedal completely down with his/her back firmly against the backrest.

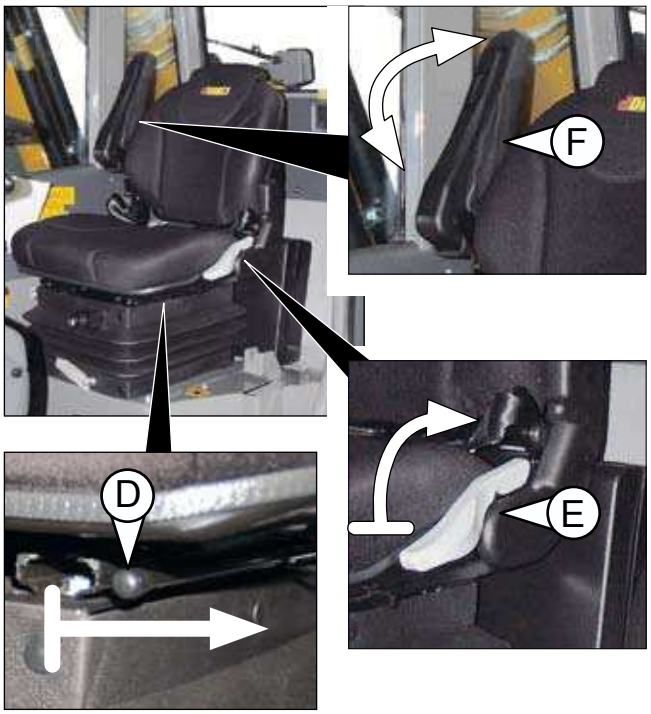

(fig.14/C)

SEAT BELTS
(Fig.15/C)

To fasten seat-belts:

1. Slide the tab (1) into the buckle (2) (pic.”A”).
2. Make sure it has been clicked in properly, then fit the belt around your body and adjust (pic.”B”).

- *ATTENTION*:

The belt is correctly adjusted when it fits tightly around the waist.

To unfasten the seat-belt (tab. ”C”):

1. Press the red button (3) on the buckle (2).
2. Slide the tab out (1).

- *ATTENTION*:

Drive the vehicle only with the seat belt properly fastened and adjusted. Driving with the seat-belt unfastened, increases the risk of accidents.

- *ATTENTION*:

Do not use damaged or warn seat belts.
Do not use seat belts installed on vehicles that have been involved in accidents. Worn, damaged or weak the seat belts may break or give in during a collision, causing serious injury to the operator.

“A”

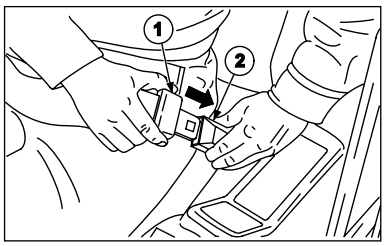

“B”

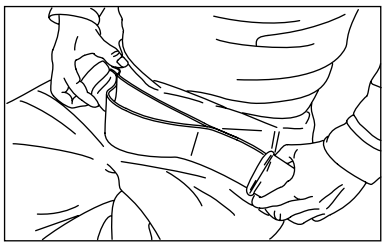

“C”

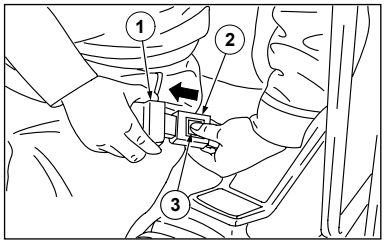

(fig.15/C)

- ATTENTION: - Read the SAFETY REGULATIONS (contained in this manual) carefully for the safety of all personnel and your vehicle.

Courtesy of Crane.Market

https://truckmanualshub.com/

- ATTENTION: - Read the SAFETY REGULATIONS (contained in this manual) carefully for the safety of all personnel and your vehicle.

Courtesy of Crane.Market

https://truckmanualshub.com/

INTERIOR CAB INSTRUMENTS
(fig.16/C)

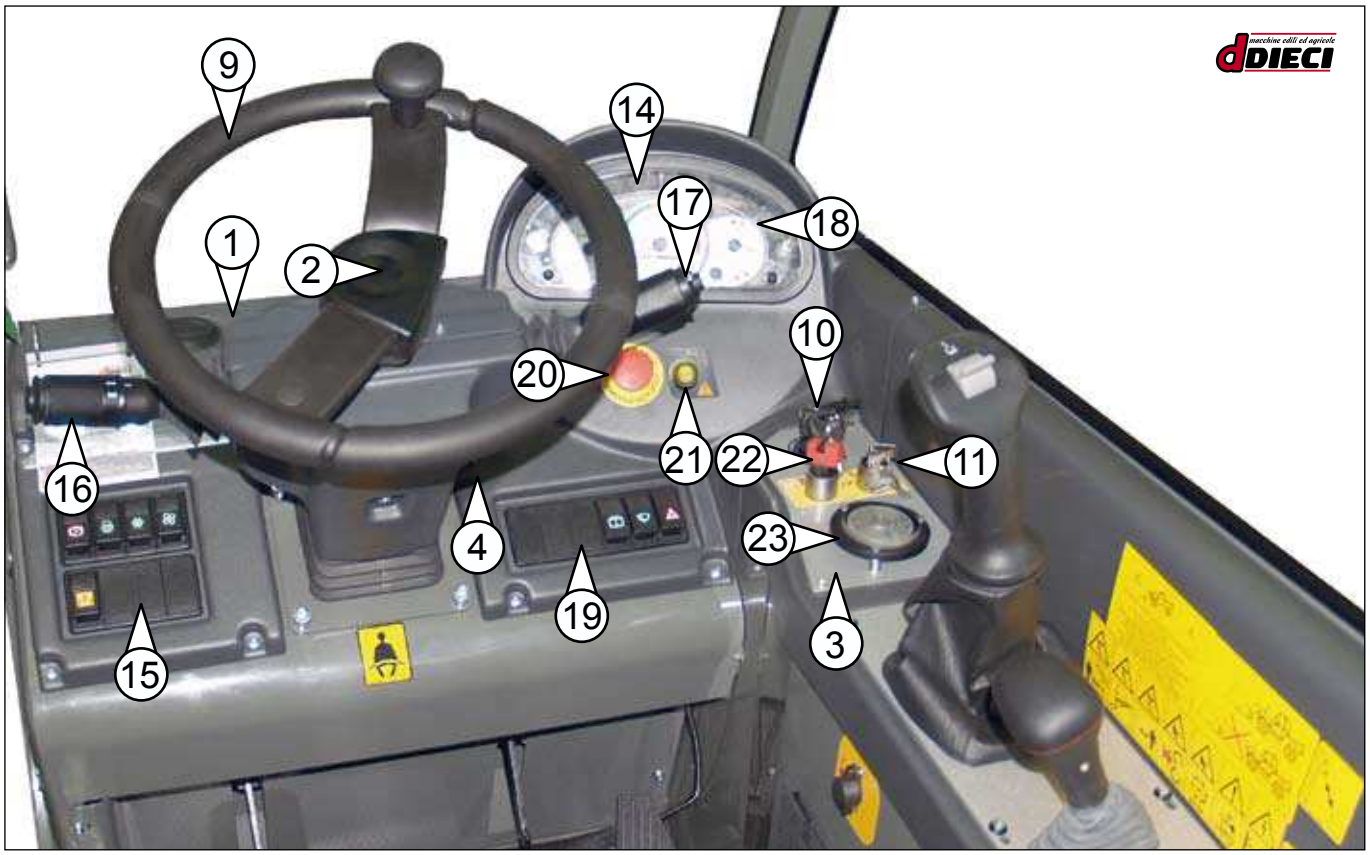

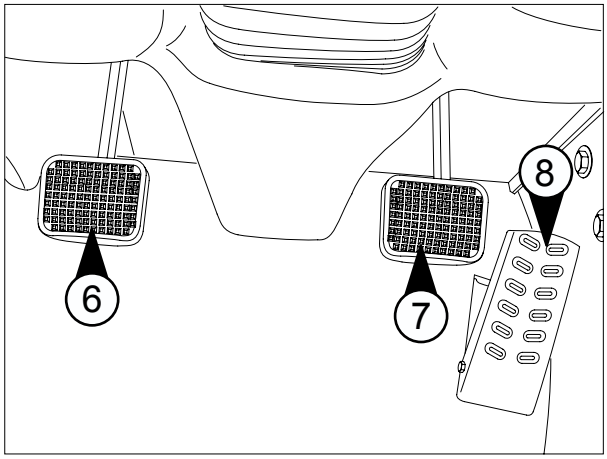

(fig.16/C)

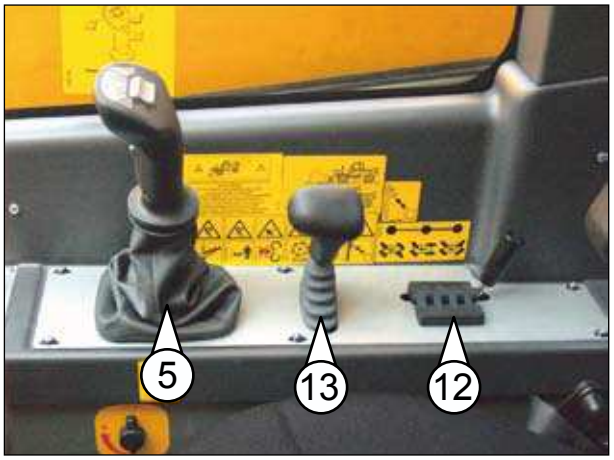

1. Dashboard with air-vents
2. Adjustable steering shaft
3. Right dashboard
4. Steering wheel adjustment lever
5. Boom joystick
6. “INCHING” pedal
7. Brake pedal
8. Accelerator pedal
9. Steering wheel
10. Ignition key
11. Machine function selector
12. Wheel steering selector
13. Attachment/accessories control lever
14. Load monitoring display
15. Left dashboard
16. Gear lever
17. Multi-function lever
18. Central dashboard
19. Central dashboard - controls
20. Emergency button
21. Anti-tipping device alarm re-entry push button (Yellow)
22. Override key/selector (Red Key)
23. Spirit level

- ATTENTION: - Read the SAFETY REGULATIONS (contained in this manual) carefully for the safety of all personnel and your vehicle.

Courtesy of Crane.Market

https://truckmanualshub.com/

CENTRAL DASHBOARD - INDICATOR LIGHTS
(fig.17/C)

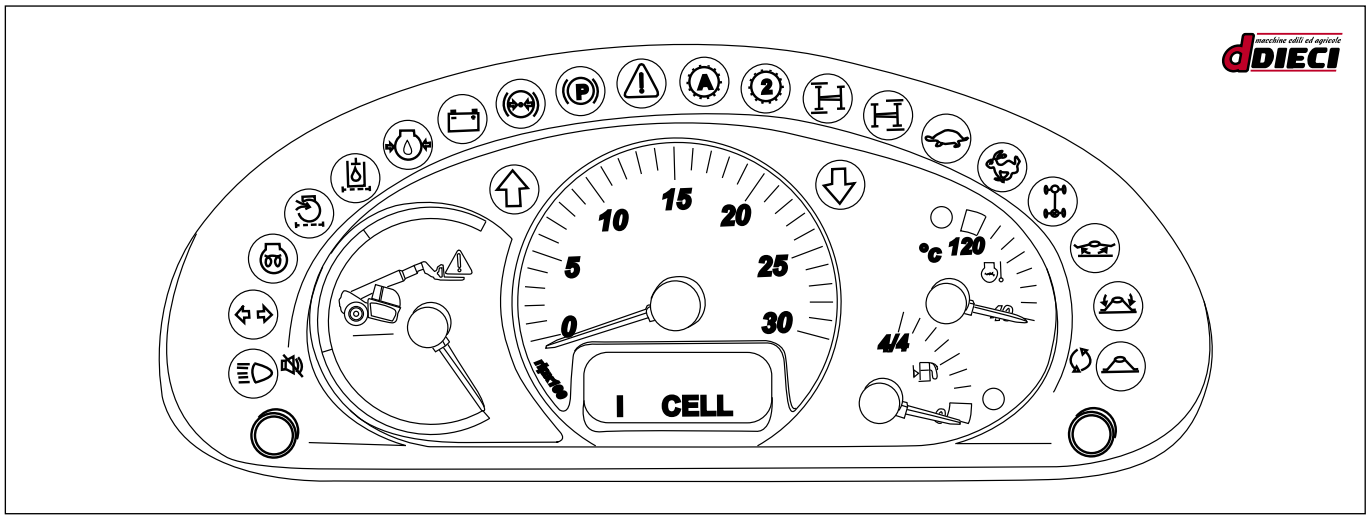

(fig.17/C)

- Full beam headlights indicator light (Blue)
- Direction indicator lights (Green)
- Spark plug pre-heating indicator light (Yellow)
- Air filter obstructed light (Red)
- Hydraulic oil obstructed filter light (Red)
- Engine oil pressure low indicator light (Red)
- Generator indicator light (Red)
- Parking brake accumulator insufficient pressure indicator light (Red)
- Parking brake light (negative brake) (Red)
- Emergency indicator light (Red)
- Mechanical gear indicator light (Green)
- Second gear indicator light (Green)
- Front wheels alignment indicator consent (Yellow)
- Rear wheels alignment indicator consent (Yellow)
- Not used
- Not used
- Not used
- Not used
- Not used
- Not used
- Forward gear indicator light (Green)
- Reverse gear indicator light (Green)

LCD Display (timer, clock, vehicle towing state)

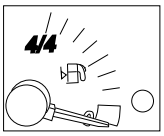

Fuel level indicator instrument

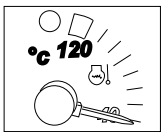

Engine water temperature indicating instrument

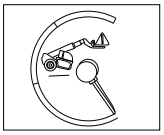

Load monitoring instrument

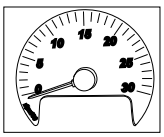

Engine RPMs indicator instrument

- ATTENTION: - Read the SAFETY REGULATIONS (contained in this manual) carefully for the safety of all personnel and your vehicle.

Courtesy of Crane.Market

https://truckmanualshub.com/

CENTRAL DASHBOARD
INSTRUMENT USE
(fig.18/C)

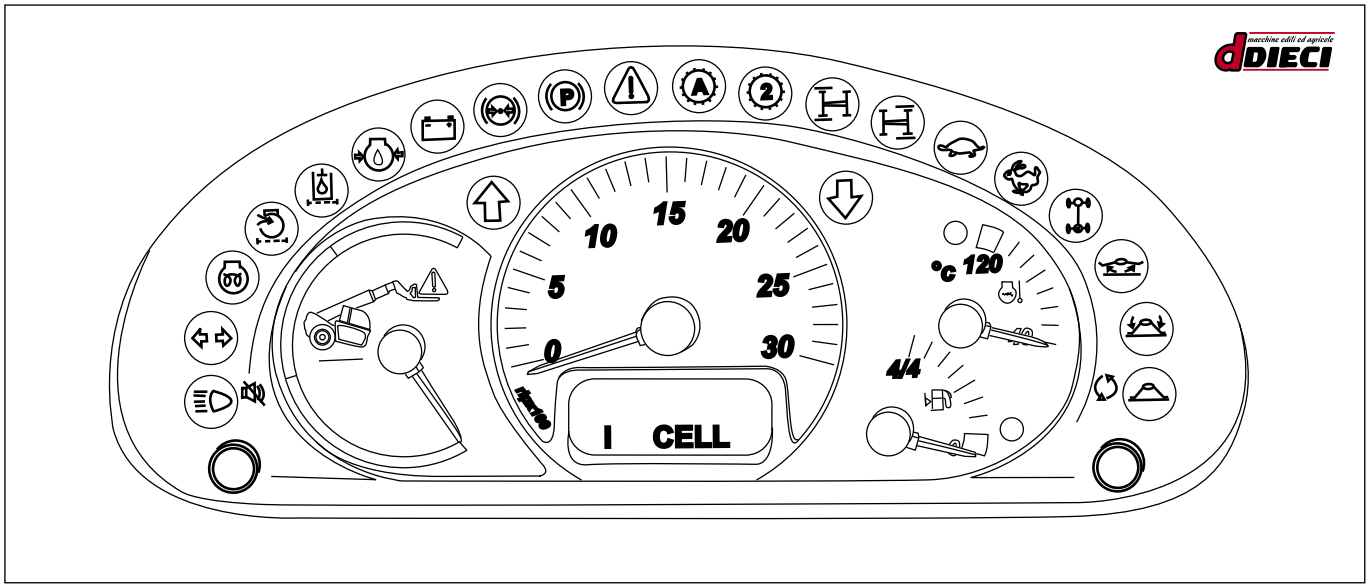

(fig.18/C)

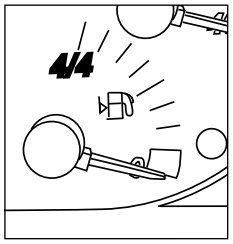

Fuel level indicator instrument

The instrument hand indicates the quantity of diesel present in the tank at any given moment. The maximum quantity is marked by the position of the hand on the left side. The hand will move down progressively, passing over a red mark which indicates minimum level (reserve), indicated by the same yellow light. When the hand completely stops (right side limit switch), the fuel tank is empty. To avoid damaging the engine, always keep the pointer above the minimum level.

Engine water temperature instrument

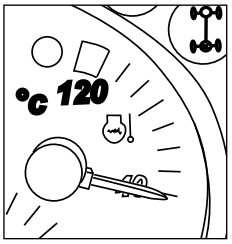

During normal use, the temperature hand moves from the lower part of the instrument (right red mark 40°), stopping when having reached the first fourth of the scale. This is the optimal condition for engine operation. If the temperature should rise excessively, almost reaching the maximum level (left red mark), stop the engine and verify the cause. When the red indicator light switches on, the maximum temperature alarm is signalled. Operate at low RPMs (max 1500) in order to avoid damaging the cool engine. Avoid abrupt manoeuvres and acceleration until the left red mark has been passed.

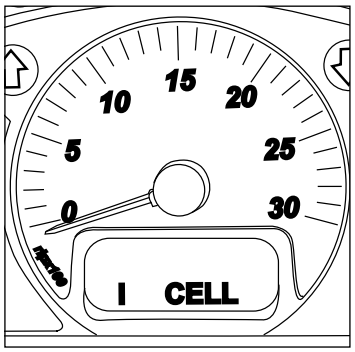

Engine rev counter

This instrument indicates the number of RPMs the engine is carrying out in that moment.

LCD

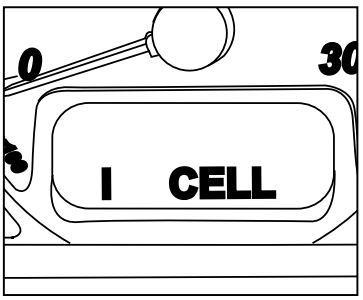

The LCD Display contains the clock, the hour meter displaying hours of use of the vehicle, the vehicle towing state using letter “N” to indicate whether gear is in idle (gear lever in neutral position), speedometer (optional), hodograph (optional), engine errors, service.

- ATTENTION: - Read the SAFETY REGULATIONS (contained in this manual) carefully for the safety of all personnel and your vehicle.

Courtesy of Crane.Market

https://truckmanualshub.com/

DASHBOARD WITH INSTRUMENTS - Left dashboard
(Electrical switches, indicator lights and control levers, standard)
(fig.19/C)

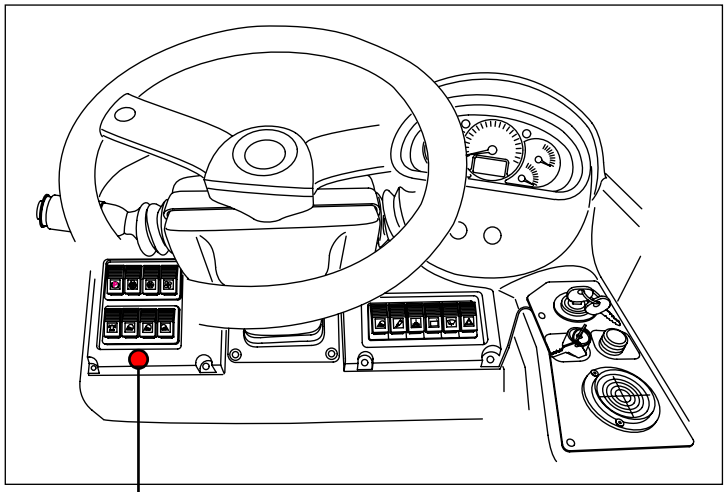

(fig.19/C)

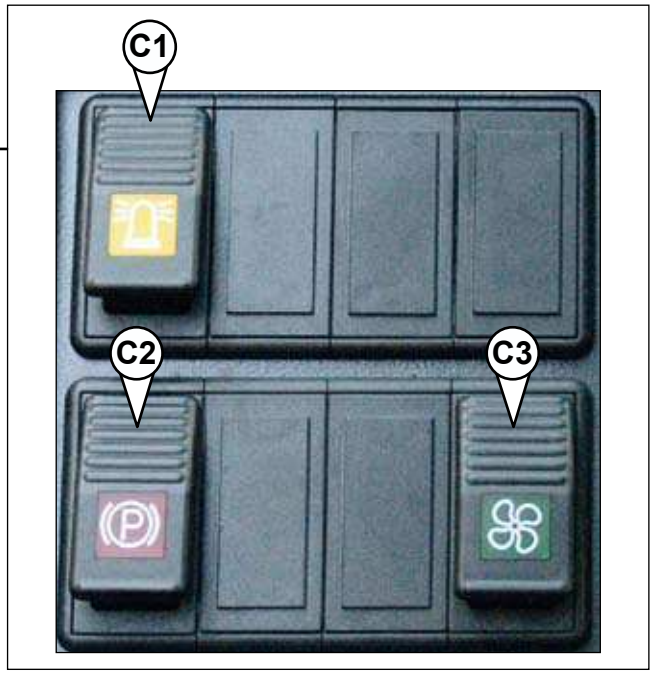

C1 **Revolving light switch (yellow)**

C2 **Parking brakes switch (red)**

C3 **Consent to cab internal ventilation (green)**

- ATTENTION: - Read the SAFETY REGULATIONS (contained in this manual) carefully for the safety of all personnel and your vehicle.

Courtesy of Crane.Market

https://truckmanualshub.com/

DASHBOARD WITH INSTRUMENTS - Right dashboard
(Electrical switches, indicator lights and control levers, standard)
(fig.20/C)

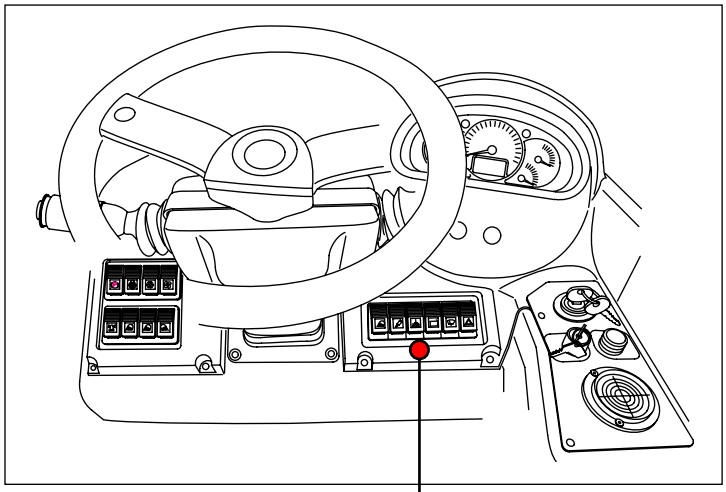

(fig.19/C)

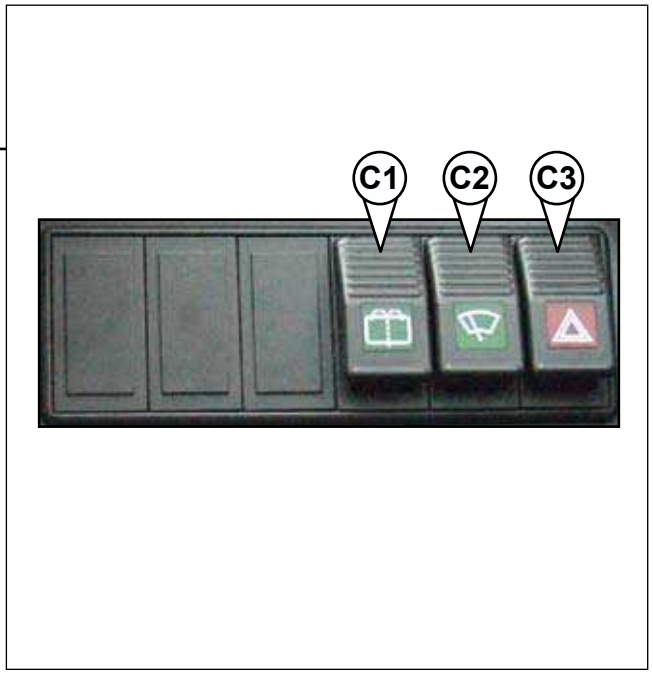

C1 **Rear windscreen wiper switch (green)**

C2 **Front windscreen wiper switch (green)**

C3 **Emergency lights (direction indicators on) (red)**

- ATTENTION: - Read the SAFETY REGULATIONS (contained in this manual) carefully for the safety of all personnel and your vehicle.

Courtesy of Crane.Market

https://truckmanualshub.com/

Emergency button (fig.29/C Pos.”1”)

The vehicle is equipped with an emergency stop device that allows to avoid situations of imminent danger or danger in progress. By pressing the emergency button (fig.29/C Pos.”1”) the thermal motor switches off and the vehicle stops.
The emergency stop device is released by turning the “mushroom-head” clockwise. Turning the button authorises machine re-start.

- ATTENTION -

The button must be used in the case of:

- **Emergency,** to switch the thermal motor off and the vehicle in situations of imminent danger or danger in progress.

- **Maintenance**, for safety to prevent accidental ignition of the vehicle during routine or extraordinary maintenance interventions.

- ATTENTION -

If the engine cannot be started, check that an emergency button has not been pressed (fig.29/C Pos.”1”)**.** If pressed, contact the Safety Manager to make sure there is no maintenance in progress, malfunctioning of the vehicle or dangerous situations.

(fig.29/C)

- ATTENTION: - Read the SAFETY REGULATIONS (contained in this manual) carefully for the safety of all personnel and your vehicle.

Courtesy of Crane.Market

https://truckmanualshub.com/

IGNITION SWITCH
(fig.30/C)

The ignition switch, with the key, allows you to:

- Switch on the instruments.
- Switch on the diesel engine.
- Release the parking brake automatically with the diesel engine in motion (fig.30/C Pos.”1”).
- Automatically engage the parking brake with the diesel engine switched off (fig.30/C Pos.”0”).

Conditions for start-up

Start-up can only occur if:
- The operator is correctly seated in the driver’s seat.
- The gear selector is in the “N”, or neutral, position.

Switching on instruments

Turn the key to position “1” (fig.30/C) to power the electrical/ electronic instruments.
When the dashboard is switched on, a check will be carried out on the instruments with all the indicator lights switched on and emission of an acoustic signal.

These will remain on until the engine is switched on:
- Battery indicator light
- Engine oil pressure indicator light

Other indicator lights may remain lit depending on the functions activated.

When the engine is running, the indicator lights signalling faults/malfunctions should go off and only those referring to active functions should remain switched on. If this is not the case, consult the “maintenance” chapter of this manual and contact a ***DIECI*** service centre.

Start-up

- Turn the key to position “1” (fig.30/C) to power the instruments.
- Turn the key to position “2” (fig.30/C) and keep it there for a few seconds in order to start-up.
- Once the engine has been started, release the key.

In the engine does not start within 5 seconds, try again at regular 15 second intervals to avoid overloading the starter.

During the first few minutes of use, keep transfer and load lifting speed low in order to heat up the engine and hydraulic oil. Operate at low RPMs (max 1500), avoiding sharp manoeuvres and accelerations until the temperature has risen.

***- ATTENTION*:**

Bring the engine to a high number of RPMs before high temperature and pressure can cause any serious damage to the engine or the hydraulic system.

***- ATTENTION*:**

With the motor started, the automatic parking brake disengages. Before starting up the vehicle, always verify that the parking brake has been manually engaged using its switch. To release the parking brake when the engine is stopped, refer to the paragraph, “towing the vehicle”.

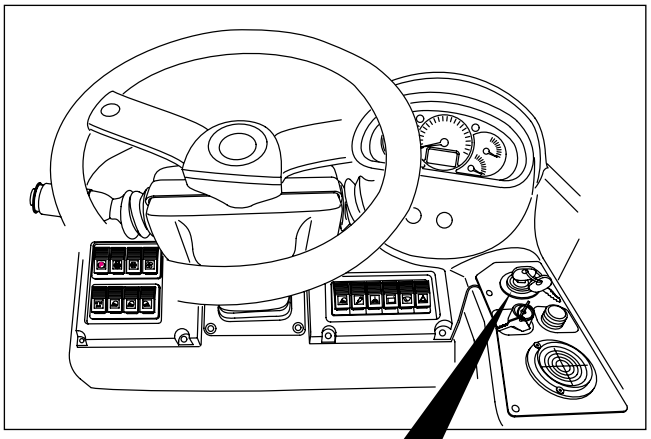

(fig.30/C)

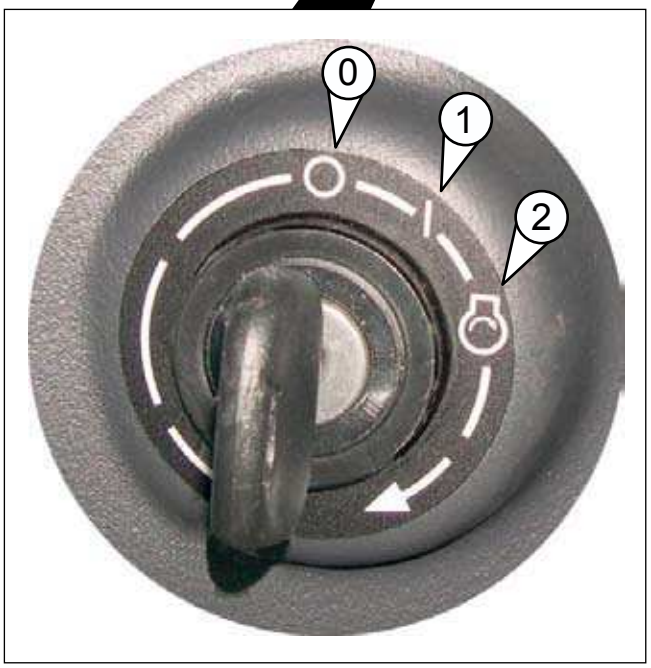

- ATTENTION -

If the engine cannot be started, check that an emergency button has not been pressed (fig.30/C Pos.”E”). If pressed, contact the Safety Manager to make sure there is no maintenance in progress, malfunctioning of the vehicle or dangerous situations.

If the engine does not start, consult the “maintenance” chapter of this manual and contact a ***DIECI*** service centre.

Courtesy of Crane.Market

https://truckmanualshub.com/

DASHBOARD LEVERS

Forward / reverse gear selection lever

This lever “1” (fig.31/C) allows the user to change direction and use the horn. On the dashboard, the indicator lights that indicate the direction in which the vehicle is travelling light up (fig. 32/C pos. “F-R”). If the indicator lights are switched off, the vehicle is in neutral, the LCD display shows the letter “N” (fig.32/C pos.”1”). If the lever is kept in the intermediate position, the gear is in neutral.

- *ATTENTION*:

To engage the FORWARD/ REVERSE gear, move the lever upwards. This movement protects the lever from accidental manoeuvres.

- Moving the lever to position “F” (fig. 31/C), the FORWARD gear is engaged and the indicator light (fig.32/C) lights up.
- Moving the lever to position “R” (fig. 31/C), the REVERSE gear is engaged and indicator light “R” (fig.32/C) lights up. When the reverse gear is engaged, an acoustic alarm is triggered.
- Pushing on the extremity of the lever activates the horn (fig.31/C pos.”2”)

- *ATTENTION* -

Lever movements are not active when:

- The parking brake is engaged.
- The operator is not seated correctly in the driver’s seat.

Procedure for changing direction:

- Reduce engine speed to a minimum and bring the vehicle to a halt.
- Select the new direction.

- *ATTENTION*:

Direction reversal is not permitted at speeds exceeding 2 km/h.

If the forward/reverse gear selector is moved to a position other than neutral when the parking brake is engaged, the transmission will not work.

- *ATTENTION*:

The “rotary” function of the lever for gears change is not active.

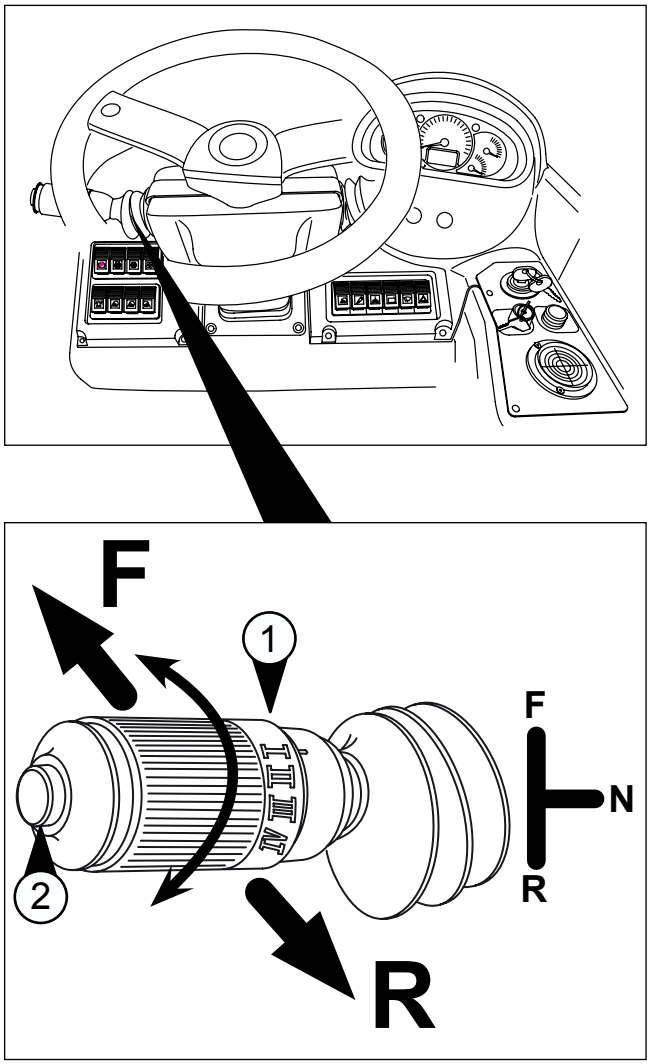

(fig.31/C)

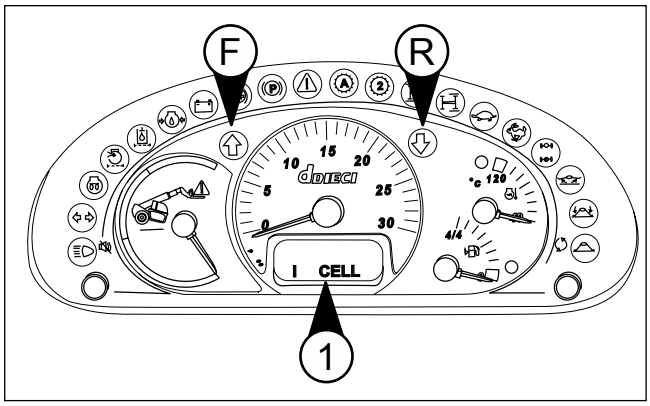

(fig.32/C)

- ATTENTION: - Read the SAFETY REGULATIONS (contained in this manual) carefully for the safety of all personnel and your vehicle.

Courtesy of Crane.Market

https://truckmanualshub.com/

MULTI-FUNCTION LEVER

Direction indicators

- Pull the lever towards you to signal a turn to the right (fig.34/C Pos.”R”).
- Push it forward to indicate a curve to the left (fig.34/C Pos.”L”).

The indicators only function when the instruments are powered.

An indicator light on the central dashboard signals the activation of the direction indicators.

Function buttons

- The middle button on the handle activates the front windscreen wipers (fig.34/C Pos.”2”).
- The button located at the far end of the handle activates the Horn (fig.34/C Pos.”3”).

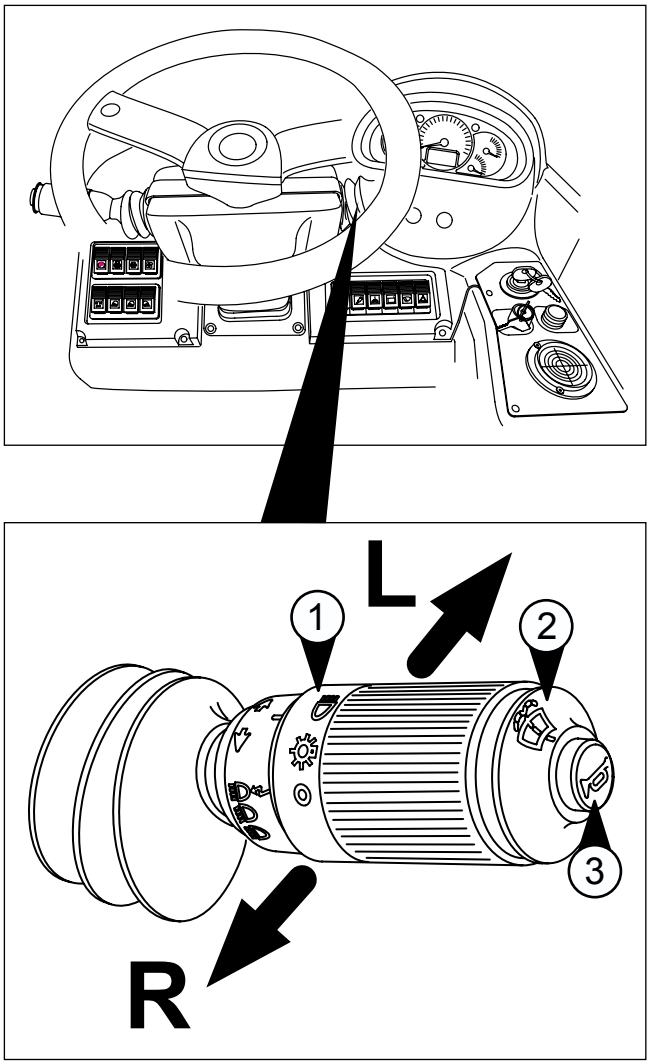

(fig.34/C)

Switching on the headlights

Turning the knob to “1” (fig. 35/C) switches on the headlights.

The symbols on the knob indicate, with an arrow, that the lights are (fig.35/C Pos. “D”):

- Switched off (fig.35/C Pos.”A”).
- Position (fig.35/C Pos.”B”).
- Dipped lights (fig.35/C Pos.”C”).

The full beam headlight (fig.35/C Pos.”E”) is activated by shifting the lever upwards using single flashes, and downward for continuous use.

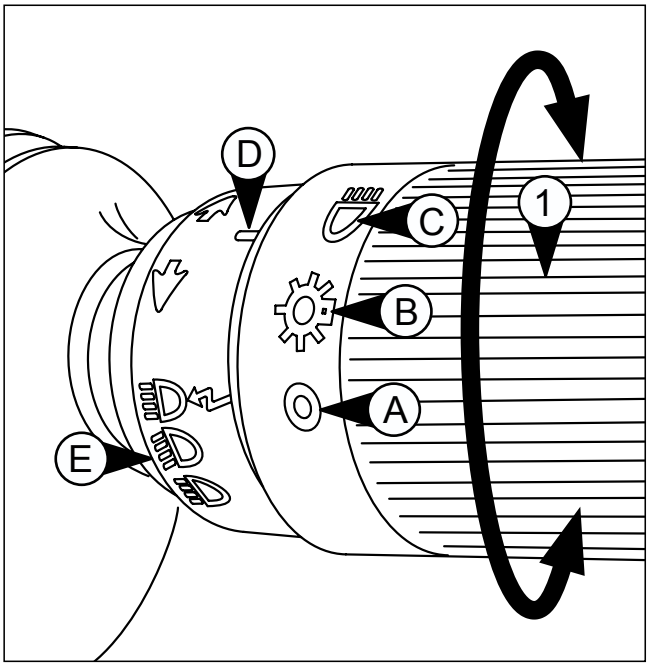

(fig.35/C)

- ATTENTION: - Read the SAFETY REGULATIONS (contained in this manual) carefully for the safety of all personnel and your vehicle.

Courtesy of Crane.Market

https://truckmanualshub.com/

PEDALS

Accelerator pedal
(fig.36/C Pos.”1”)

Press down the accelerator pedal to increase engine RPMs and release it to decrease RPMs. The pedal operates directly on the engine injection pump.

Service brake pedal
(fig.36/C Pos.”2”)

Press the service pedal to slow down or stop the vehicle. The pedal operates directly on the service brakes inside the differential axles.

When the brake pedal is pushed, the rear stop lights switch on. The lights remain switched on until the pedal is released.

Periodically check that both lights are working.

***- ATTENTION*:**

In the event of limited use of the pedal, periodically check that it is working properly. Contact a ***DIECI*** service centre in the event of a problem.

”INCHING” PEDAL
(fig.36/C Pos.”3”)

The pedal allows for slow, precise movements forward even when the engine is running at a high RPM. It acts directly on the hydrostatic pump reducing capacity.
The vehicle stops, remaining partially braked, when the pedal is fully pressed down.

***- ATTENTION*:**

Do not press the “inching” pedal at high speeds, the vehicle will brake sharply.

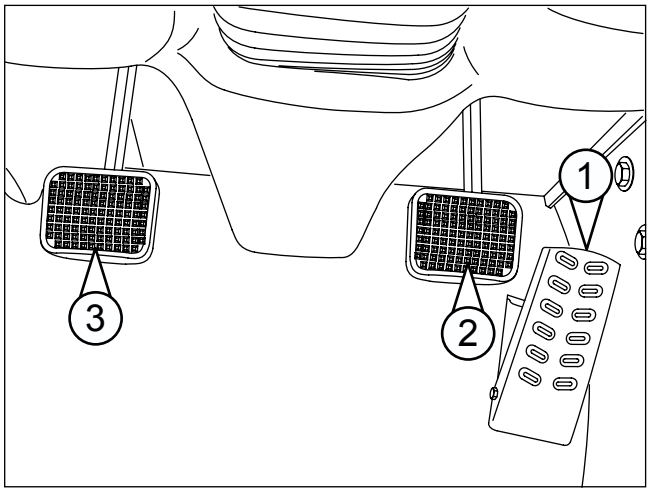

(fig.36/C)

- ATTENTION: - Read the SAFETY REGULATIONS (contained in this manual) carefully for the safety of all personnel and your vehicle.

Courtesy of Crane.Market

https://truckmanualshub.com/

PARKING BRAKE

The parking brake must be engaged whenever the operator leaves the vehicle, whether the engine be switched off or on, and even in the event of only momentary stops or any time the vehicle is working at a halt with the outriggers lowered (if present). The brake is automatically engaged when the engine is switched off.

When switch “A” (fig.37/C) is pressed, the parking brake is engaged. The indicator warning light on the push button and the central dashboard (fig.38/C Pos.”1”) indicate proper engagement of the parking brake. When the parking brake is engaged, the vehicle cannot move and the hydrostatic transmission is disengaged.

To ensure the parking brake is working properly, do the following:

1. Get in the vehicle and fasten your seat belt.
2. Start up the engine.
3. Park the vehicle on a flat and dry surface.
4. Engage the parking brake (fig.37/C Pos.”A”).
5. Raise the tools until they are in the position to be transferred.
6. Select the slow speed gear.
7. Engage the forward gear switch.
8. If the vehicle does not move, press down the accelerator to gradually increase the rotation speed up to 1500 r.p.m. The vehicle must not move.
9. The test should not last for more than 20 seconds.
10. If during the test, the vehicle has not moved have the brake checked at a ***DIECI*** service centre.

- *ATTENTION*:

In the event the parking brake fails do not use the vehicle.

- *ATTENTION*:

Unauthorised modifications of the rear axle ratio, the vehicle weight, or wheel and tyre dimensions may compromise proper functioning of the parking brake.

- *ATTENTION* -

Before ensuring the parking brake is working properly, ascertain no persons are present around the machine.

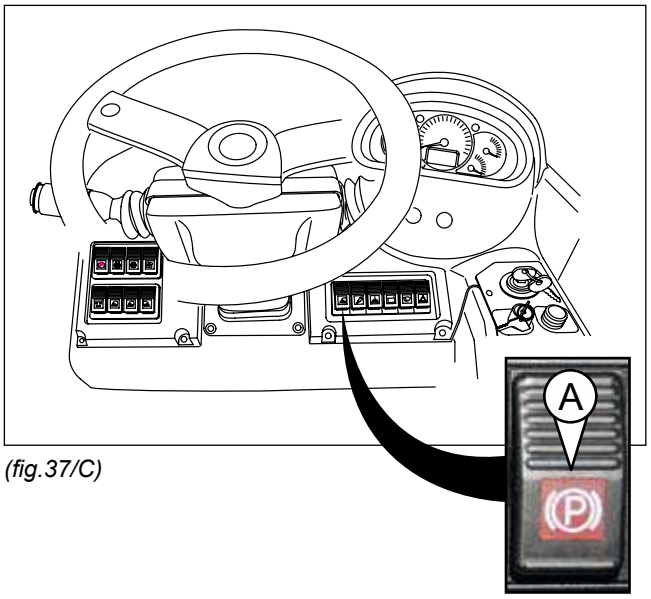

(fig.37/C)

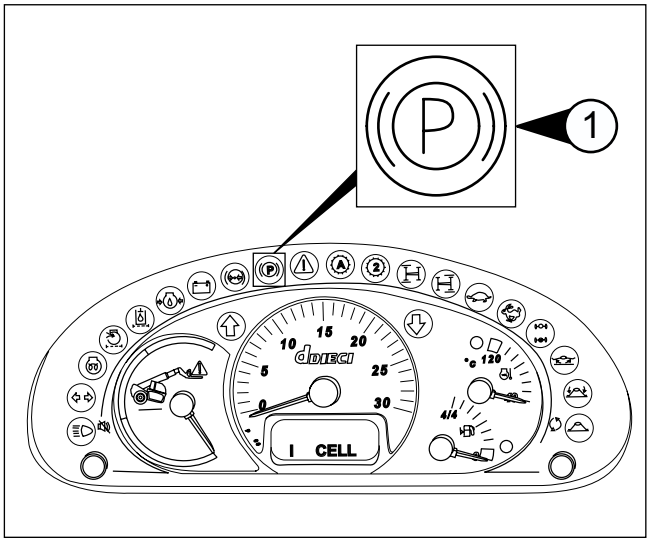

(fig.38/C)

Courtesy of Crane.Market

https://truckmanualshub.com/

SPIRIT LEVEL
(fig.40/C)

The spirit level (fig.40/C Pos.”1”) is located to the right of the operator. It is used to verify the proper levelling of the vehicle. The air bubble must be at centre of the level; it must not be further than 2° away from the centre, as the vehicle would no longer be in safe conditions.

- *ATTENTION*:

For safe operation, the vehicle must be level; the maximum slope allowed is 2°.

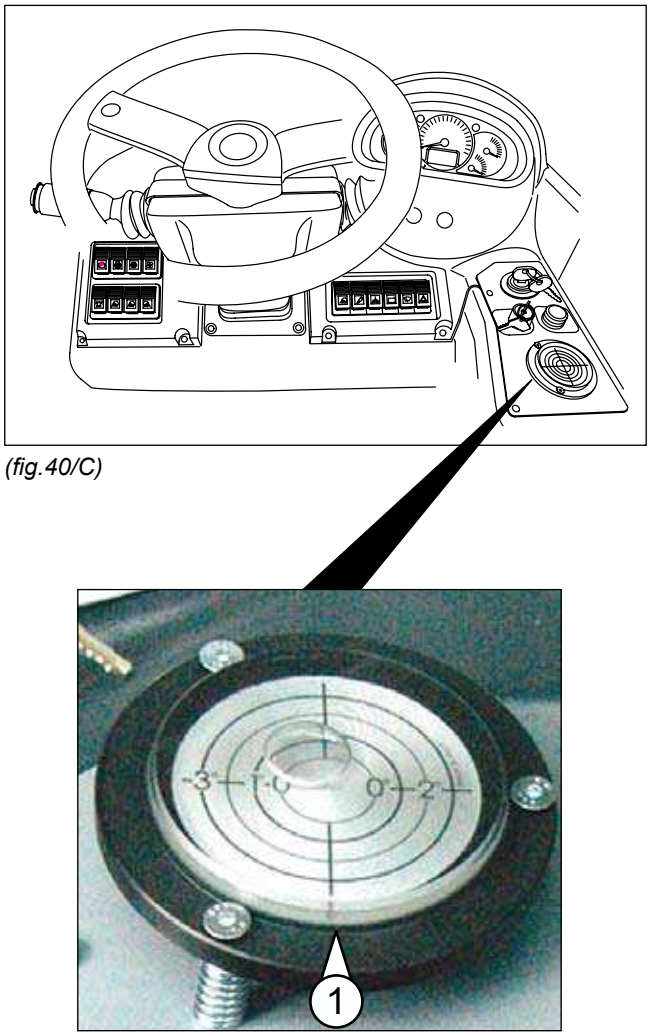

(fig.40/C)

- ATTENTION: - Read the SAFETY REGULATIONS (contained in this manual) carefully for the safety of all personnel and your vehicle.

Courtesy of Crane.Market

https://truckmanualshub.com/

BOOM CONTROL LEVER (Fig.50/C Pos.”1”)

This lever is found to the right of the operator (fig.50/C Pos.”1”). It is used to manoeuvre the boom and its extremities.

- *ATTENTION*:

Before using the boom make sure that the surrounding area is free. Make sure that the loads to be raised correspond with the capacity diagrams of the vehicle.

- *ATTENTION*:

The instructions refer to the standard version at the time of printing. In there are special options or following technical updates, lever movements may correspond to different controls. For this reason, always refer to instructions present inside the driver’s cab.

- *ATTENTION*:

The Manufacturer offers a range of levers (Joysticks) for boom movement with different technical specifications and those different than the standard version (see following pages).

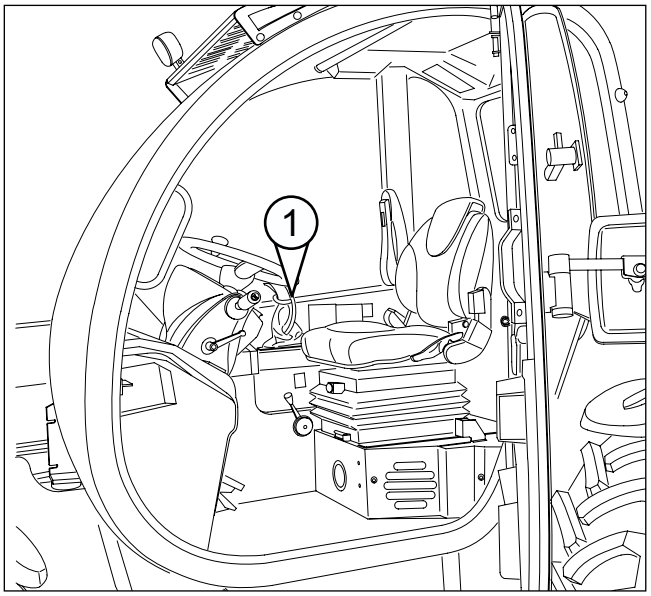

(fig.50/C)

Courtesy of Crane.Market

https://truckmanualshub.com/

3 in 1 Proportional Extension Joystick (Standard version)
(fig.51/C)

Before each manoeuvre, press and hold down control lever "**A**" (fig.51/C).

Boom manoeuvre:

- Pull joystick "**B**"(fig.51/C) backward to raise the boom.
- Pull joystick "**B**" (fig.51/C) forward to lower the boom.

Boom extension:

- Push lever "**C**" (fig.51/C) forward to extend the boom.
- Push the lever "**C**"(fig.51/C) backward to return the boom.

Note: the extension or retraction speed will be proportional to the movement of lever "**C**" (fig.51/C).

Swivelling support attachment:

- Move joystick "**B**" (fig.51/C) to the right side to swing the support attachment downward.
- Move joystick "**B**" (fig.51/C) to the left to swing the attachment support upward.

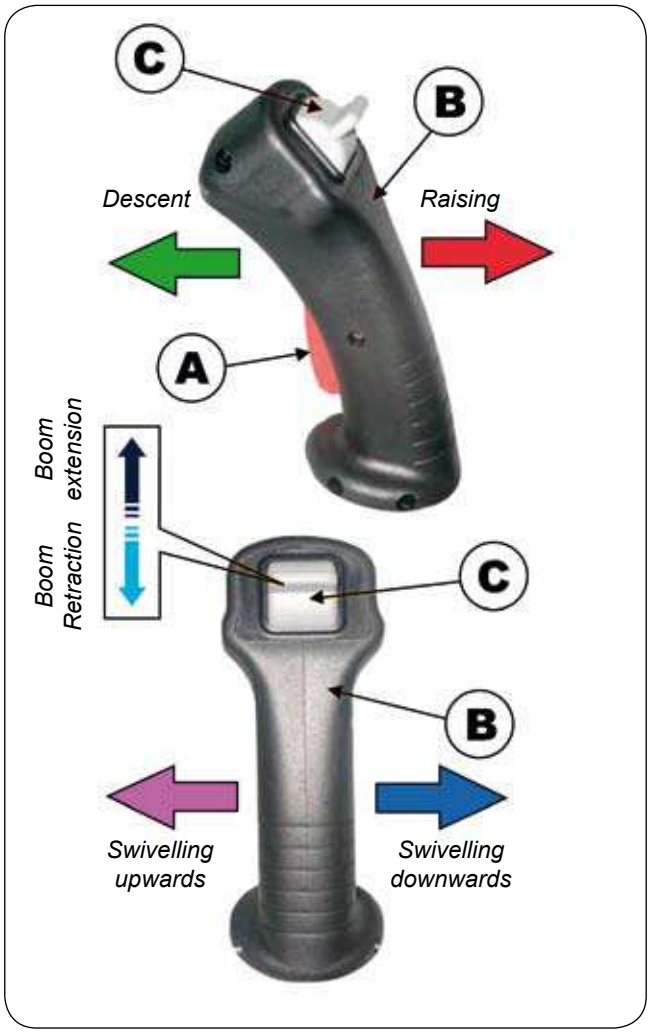

(fig.51/C)

- ATTENTION: - Read the SAFETY REGULATIONS (contained in this manual) carefully for the safety of all personnel and your vehicle.

Courtesy of Crane.Market

https://truckmanualshub.com/

SERVICE CONTROL LEVER.

With 3 in 1 distributor installed, the vehicle is equipped with a second Joystick (fig.52/C pos."A") to control the services.

To make movements:

- Grip the Joystick "A" (fig.52/C),
- Press and hold button "B" (fig.52/C)
- Move Joystick "A" to the right/left (fig.52/C).

***- ATTENTION*:**

Before operating the vehicle, ensure that service Joystick "A" (fig.52/C) is working properly.
Work in an area free of any obstacles to allow so that movements can be checked without risk of damaging things, other people or animals.

(fig.52/C)

Courtesy of Crane.Market

https://truckmanualshub.com/

4 in 1 Proportional Control Extension Joystick On-Off Services
(fig.53/C)

Before each manoeuvre, press and hold down control lever "**A**" (fig.53/C).

Boom manoeuvre:

- Pull joystick "**B**"(fig.53/C) backward to raise the boom.
- Push the joystick "**B**" (fig.53/C) forward to lower the boom.

Boom extension:

- Push lever "**C**" (fig.53/C) forward to extend the boom.
- Push lever "**C**" (fig.53/C) backward to retract the boom.

Note: the extension or retraction speed will be proportional to the movement of lever "**C**" (fig.53/C).

Swivelling support attachment:

- Move joystick "**B**" (fig.53/C) to the right side to swing the support attachment downward.
- Move joystick "**B**" (fig.53/C) to the left to swing the attachment support upward.

Service controls:

- Press the green push button "**1**" (fig.53/C) for services.
- Press the green push button "**2**" (fig.53/C) for services.

NOTE: When an electro-hydraulic attachment is installed, push buttons "1" and "2" are used to control service movements in accordance with the corresponding attachment manual.

***- ATTENTION*:**

Before operating the vehicle, ensure that service buttons "1" and "2" (fig.53/C) is working properly.
Work in an area free of any obstacles to allow so that movements can be checked without risk of damaging things, other people or animals.

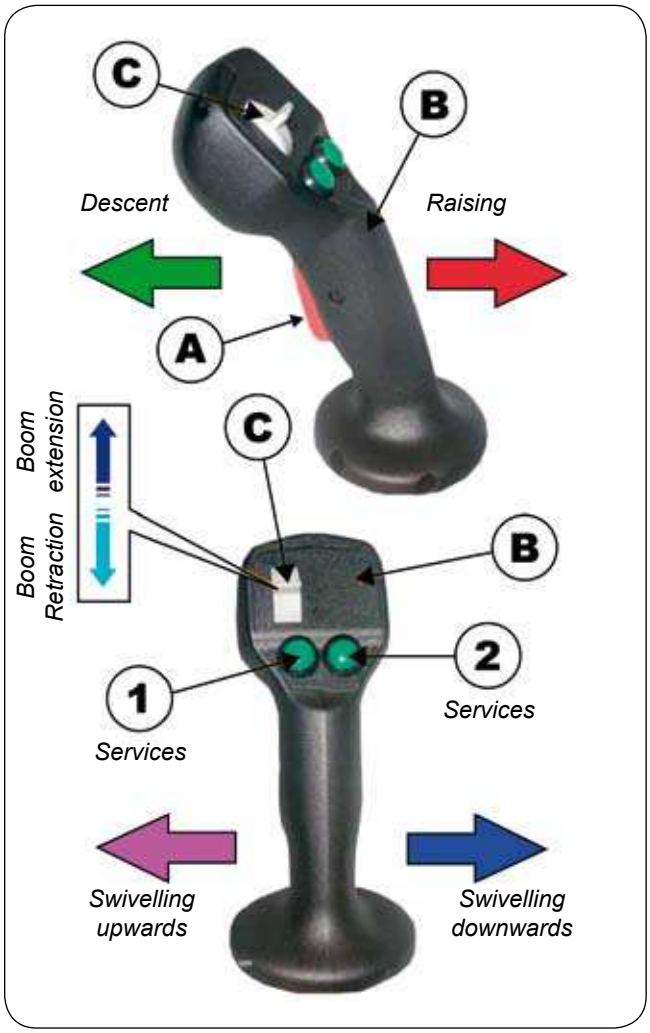

(fig.53/C)

- ATTENTION: - Read the SAFETY REGULATIONS (contained in this manual) carefully for the safety of all personnel and your vehicle.

Courtesy of Crane.Market

https://truckmanualshub.com/

4 in 1 Proportional Control Extension Joystick Proportional services

(fig.54/C)

Before each manoeuvre, press and hold down the “man in” control lever “A” (fig.54/C).

Boom manoeuvre:

- Pull joystick “1” (fig.54/C) backward towards the letter “B2” (fig.54/C), to raise the boom.
- Push the joystick “1” (fig.54/C) forward towards the letter “B1”(fig.54/C) to lower the boom.

Boom extension:

- Push the roller “**C**”(fig.54/C) forward towards the letter “C1”to extend the boom.
- Push the roller “**C**” (fig.54/C) backward towards the letter “C2” to retract the boom.

Note: the extension or retraction speed will be proportional to the movement of roller “**C**” (fig.54/C).

Swivelling support attachment:

- Move joystick “1” (fig.54/C) right toward letter “D2” to swivel the support attachment downward.
- Move joystick “1” (fig.54/C) left toward letter “D1” to swing the support attachment upward.

Service controls:

- Push roller “**E**” (fig.54/C) forward, towards letter “E1”, for services.
- Push roller “**E**” (fig.54/C) backward, towards letter “E2”, for services.

NOTE: when an electro-hydraulic attachment is installed, roller “E” is used to control service movements in accordance with the corresponding attachment manual.

The speed of the services movement will be proportional to the movement of roller **E**”.

- *ATTENTION*:

Before operating the vehicle, ensure that service roller “E” is working properly.
Work in an area free of any obstacles to allow so that movements can be checked without risk of damaging things, other people or animals.

ALARM RE-ENTRY PUSH BUTTON:
(If present)

Press the button “F (fig.54C) to bring the load back to safe conditions in case of intervention of the guards. For the functioning and use specifications, refer to chapter “C”, “Alarm re-entry push button” paragraph.

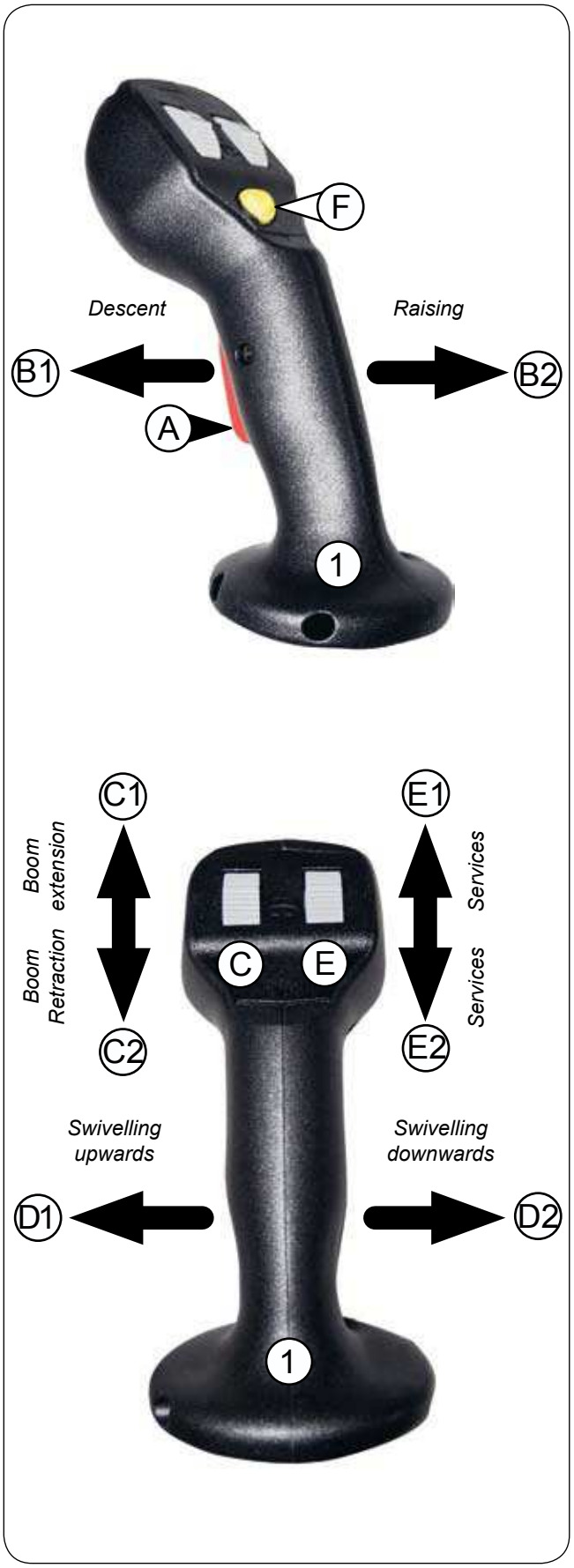

(fig.54/C)

- ATTENTION: - Read the SAFETY REGULATIONS (contained in this manual) carefully for the safety of all personnel and your vehicle.

Courtesy of Crane.Market

https://truckmanualshub.com/

Longitudinal momentum indicator
(fig.58/C)

The indicator has a scale of three colours that respectively indicate:

- Green "**A**" (fig.58/C), normal working condition; no acoustic signal.
- Yellow "**B**" (fig.58/C), no pre-alarm condition; no acoustic signal.
- Red "**C**" (fig.58/C), tipping limit load; intermittent acoustic alarm.
- Red "**C1**" (fig.58/C), tipping limit load; instrument full high scale; continuous audible signal, light "1" (fig.59/C) general alarm on.

The state of the load is signalled by the indicator **"D"** (fig.58/C), that turns from left to right upon the increasing of the detected load.

The intermittent acoustic signal that intervenes, on reaching the red zone **"E"** (fig.59/C) of the instrument, can be deactivated by pressing button **"C"** (fig.58/C). The acoustic signal is automatically re-enabled on reaching the Red "**C1**" (fig.58/C). When the load limit is reached (fig.58/C Pos."**C1**"), the device automatically blocks all vehicle movements.

When the instruments are switched on, the device runs an automatic test. All LEDs switch on, indicators move and an audible signal is heard. If this is not the case, contact the ***DIECI*** after-sales network immediately.

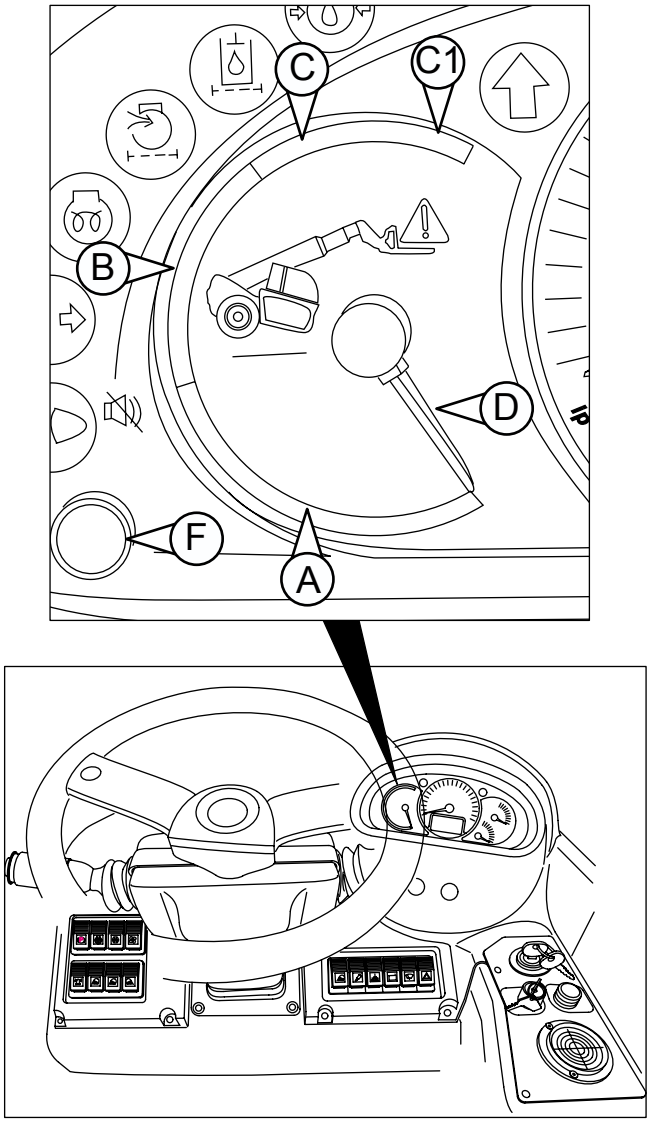

(fig.58/C)

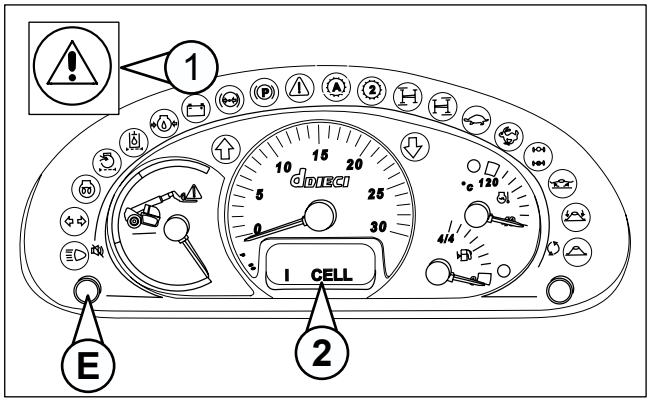

(fig.59/C)

- ATTENTION: - Read the SAFETY REGULATIONS (contained in this manual) carefully for the safety of all personnel and your vehicle.

Courtesy of Crane.Market

https://truckmanualshub.com/

Alarm re-entry push button

(fig.60/C Pos.”**1**” - fig.61/C Pos.”**1**”)

The button can be positioned on the dashboard (fig.60/C Pos.”**1**”) or on joystick (fig.61/C Pos.”**1**”) depending on the vehicle models.

When the load limit is reached (fig.62/C Pos.”**C1**”), the device automatically blocks all vehicle movements, activating the alarm re-entry push button.

The alarm re-entry push button retracts the extension of the telescopic boom, bring the vehicle to safe conditions. Once the safe condition has been reached, the alarm will stop working, the button is disabled and the joystick starts working. The button must be kept pressed until it is automatically disabled.

(fig.60/C)

(fig.61/C)

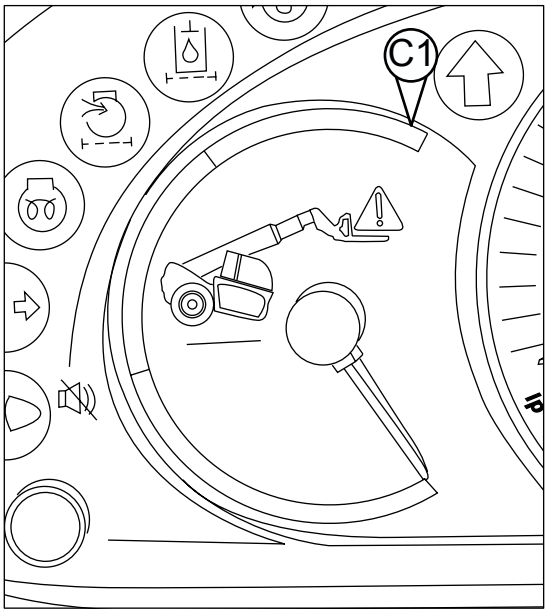

(fig.62/C)

- ATTENTION: - Read the SAFETY REGULATIONS (contained in this manual) carefully for the safety of all personnel and your vehicle.

Courtesy of Crane.Market

https://truckmanualshub.com/

Override selector
(fig.63/C Pos."**1**")

- ATTENTION -

The override selector can only be used after having attempted restoring the safe conditions by using the Alarm re-entry push button.

With the indicator in position "**C1**" (fig.64/C), the **override selector** (fig.63/C Pos."**1**"), activates; the selector is the spring type.

When the load limit is reached (fig.64/C Pos."**C1**"), the device blocks all vehicle movements.

In these conditions it is possible return to safe conditions:

- Rotate the red key (fig.63/C Pos."**1**") to position "B" (fig.63/C) and keep it in this position.
- Retract or raise the boom **only** bringing the boom back to a safe position (see capacity diagram).
  Do NOT lower or extend the boom as they are destabilising movements.
- Once the safety zone has been reached, the alarm will stop, the selector can be released.

- ATTENTION -

By turning the override selector (fig.63/C Pos."1") to position "B" (fig.63/C) the anti-tipping systems are deactivated

IT IS MANDATORY to consult the load diagram (found in the cab regarding use and maintenance) before carrying out any manoeuvre. Using the inclinometer and the letters on the boom, the exact position of the boom can be determined. Do make any pejorative movements in these conditions or vehicle stability may be compromised causing overturning.

The selector is a type of key that provides the Safety Manager with the possibility of removing the key and not allow anyone else to deactivate the anti-tipping system.

- ATTENTION -

These operations can only be performed by qualified personnel that has been authorised by the Safety Manager.

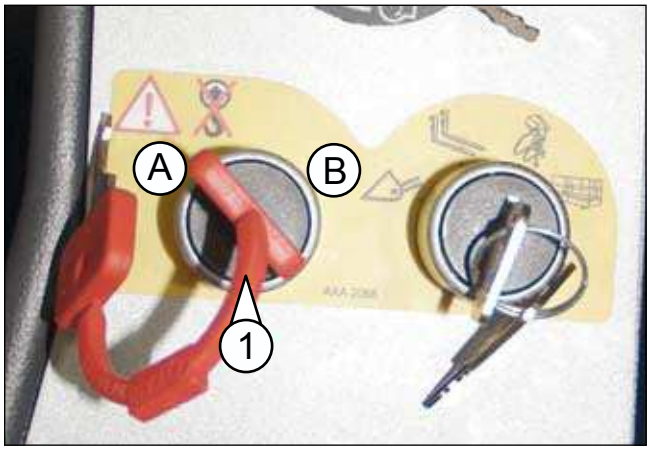

(fig.63/C)

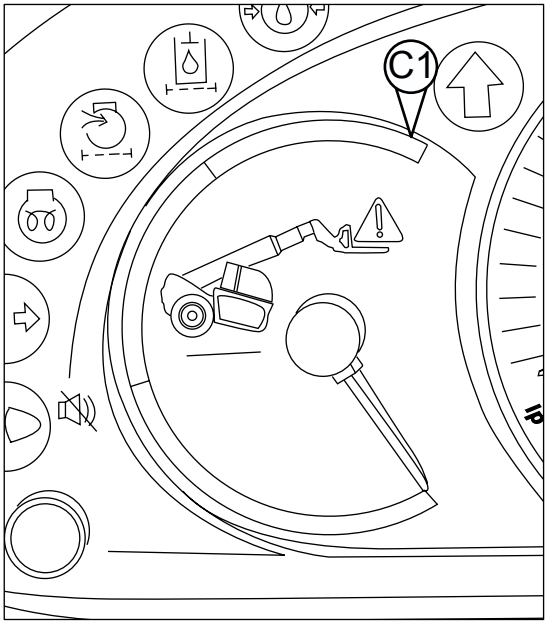

(fig.64/C)

Courtesy of Crane.Market

https://truckmanualshub.com/

VEHICLE FUNCTIONS SELECTOR
(fig.65/C pos.”1”)

The vehicle possesses a “vehicle functions selector” (fig.65/C Pos.”1”)whichmust**ALWAYS**besetontheattachmenttobeused.

The selection categories are:

- **Shovel (shovel mode)**
  (fig.65/C Pos.”A” shovel symbol)

  Other accessories:
  Buckets, mixing buckets.

- **Handling objects (fork lift mode)**
  (fig.65/C Pos.”B” forks symbol)

  Other accessories:
  Forks, ladles, material baskets.

- **Handling objects (crane mode)**
  (fig.65/C Pos.”C” winch symbol)

  Other accessories: plate with lifting hook, winches, hoists, extension trestles, winches with extension trestles.

- **Handling persons (elevation platform mode)**
  (fig.65/C Pos.”D” basket symbol)

  Other accessories:
  all man baskets.

The attachments applicable to the vehicles in question refer to the ***DIECI*** price list.

Select the attachment by turning the key. The selector is a type of key that provides the Safety Manager with the possibility of removing the key after having selected the tool, not allowing anyone else to use the selector.

In Shovel mode with boom fully retracted, the anti-tipping device is automatically deactivated.
Should the boom be extended or be subsequently extended, functioning will be the same as in forks mode.
In this mode:

- the instrument (fig.66/C Pos.”A”) is always functioning regularly and indicates only the load state.

- With boom closed, the buzzer does not work to signal the load state but starts working only to signal system errors.

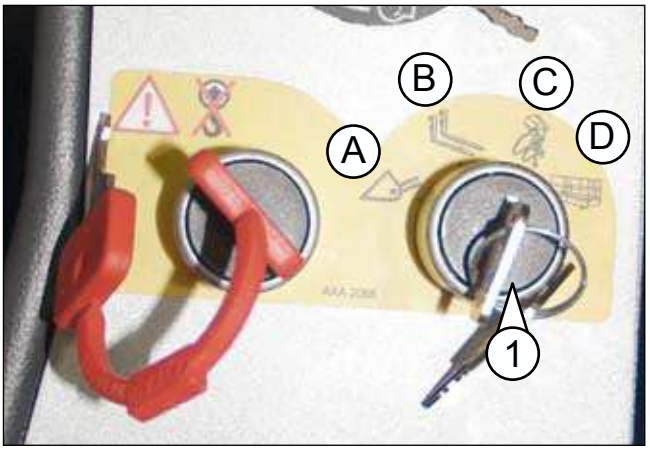

(fig.65/C)

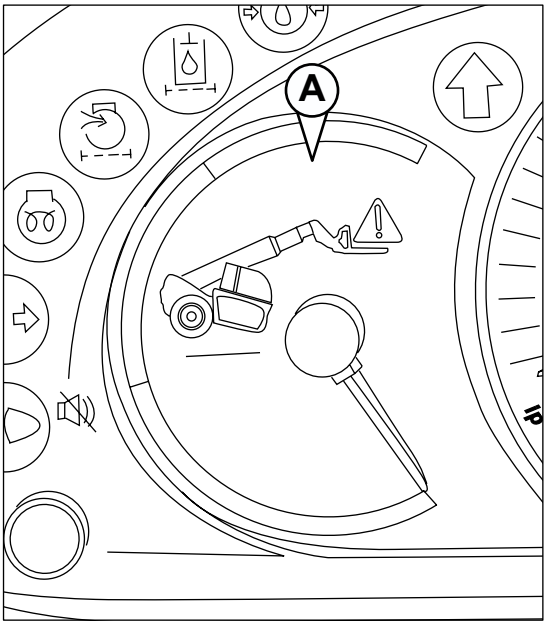

(fig.66/C)

Courtesy of Crane.Market

https://truckmanualshub.com/

ANTI-TIPPING DEVICE CHECK

- ATTENTION -

IT IS COMPULSORY TO CHECK CORRECT FUNCTIONING OF THE ANTI-TIPPING DEVICE BEFORE STARTING WORK AGAIN.

To correctly check the device follow the operations:

- Press the left button for five seconds (fig. 13, pos. 1), all instrumentation will perform a functioning test, by repositioning at indication of current status of the load.
- Ensure that work selection key (fig. 14, pos. 1) is positioned in Forks position.
- Place the machine on tyres with the outrigger feet fully lifted (if present), on flat and consistent soil.
- Using the forks load a weight above 300 kg or, however, significant for the capacity of the machine.
- Lift the load for about 1 m from the ground.
- Slowly slip off the boom.
  During this manoeuvre monitor the Longitudinal Moment indicator (*Fig. 13, pos. 2*). Once the end of the red area is reached, the red general alarm warning light must switch on with continuous acoustic signal, the extension movement will be simultaneously blocked.
- Now check that all other boom movements are blocked.
- Check block happens in the point indicated in the capacity diagram in the notepad inside the cabin.
- If all works correctly, use the alarm retraction button to re-enable the movements of the boom and start work.

If outrigger feet are present on the machine, repeat the operations with the outrigger fully lowered but with a load above 500 kg or, however, significant for the capacity of the machine.

- DANGER -

IN CASE OF ANOMALIES TO THE SAFETY DEVICES, INTERRUPT WORK UNTIL REPAIRED.

Every 100 hours of functioning, a test must be carried out during routine maintenance with load to check the efficiency of the device. This test can only be carried out by a ***DIECI*** authorised workshop.

(fig. A)

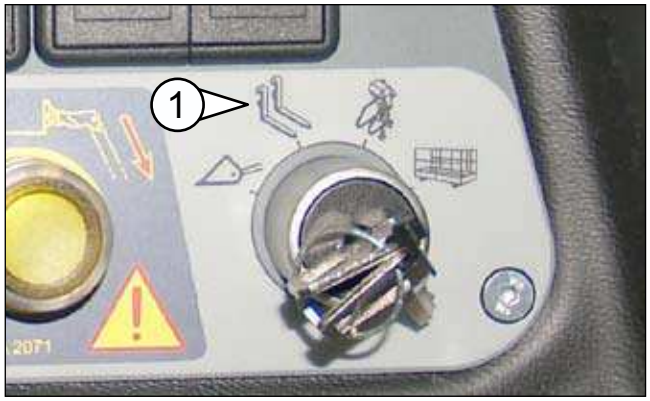

(fig. B)

- ATTENTION: - Read the SAFETY REGULATIONS (contained in this manual) carefully for the safety of all personnel and your vehicle.

Courtesy of Crane.Market

https://truckmanualshub.com/

STEERING SELECTOR
(fig.67/C Pos.”1”)

By moving the lever (fig.67/C Pos.”A”) 3 types of steering are obtained:

1 - Normal steering - (fig.69/C)
This type of steering allows for **FRONT** steering only.
To activate front steering, move lever “1” (fig.67/C) to position “**2**” (fig.67/C) shown on the functions sticker.

2 - Beam steering - (fig.70/C)
This type of steering allows for maximum right steering to the right and the left.
To activate beam steering, move lever “1” (fig.67/C) to position “**1**” (fig.67/C) shown on the functions sticker.

3 - Crab steering - (fig.68/C)
This type of steering allows for crab steering, front and rear parallel wheels (sideways movement of vehicle).
To activate cab steering, move lever “1” (fig.67/C) to position “**3**” (fig.67/C) shown on the functions sticker.

- ATTENTION -

Steering selection is done when the vehicle is stopped.

***- ATTENTION*:**

For road travel it is mandatory to position the steering control lever in Position “1” (fig.67/C) blocked using the relevant retainer (fig.67/C Pos.”C”); (4 wheel steering mode).

***- ATTENTION*:**

Before selecting a new steering type, align the wheels as explained in the procedure below. Wheel alignment must also be performed with the vehicle at a standstill.

Alignment (standard)

1. Position selector “A” (fig.67/C) on the position marked with “1” (fig.67/C) on the functions sticker.
2. Turn the steering wheel, until the rear wheels have been completely straightened.
3. Position selector “A” (fig.67/C) on the position marked with “2” (fig.67/C) on the functions sticker.
4. Turn the steering wheel, until the front wheels have been completely straightened.
5. At this point, the front and rear wheels are aligned and the desired steering type can be selected.

***- ATTENTION*:**

Periodically it is advisable to align the wheels (8-10 hours) depending on the continued use of the vehicle.

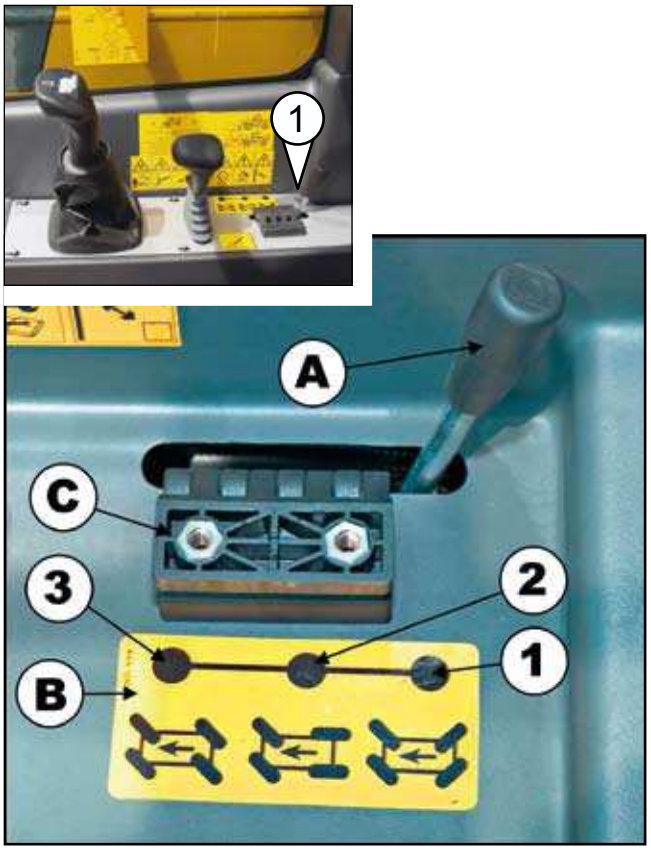

(fig.67/C)

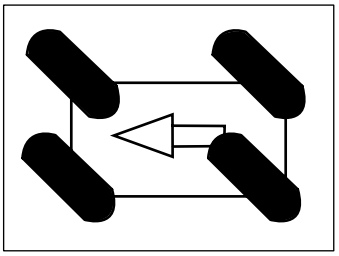
(fig.68/C)

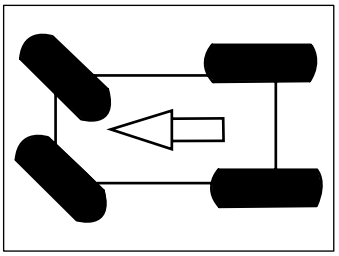
(fig.69/C)

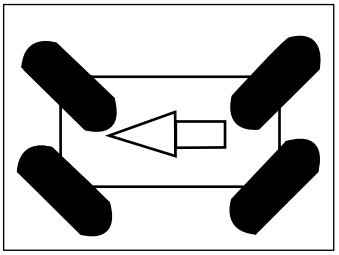
(fig.70/C)

- ATTENTION: - Read the SAFETY REGULATIONS (contained in this manual) carefully for the safety of all personnel and your vehicle.

Courtesy of Crane.Market

https://truckmanualshub.com/

FRONT WINDSCREEN WIPER CONTROL
(fig.71/C Pos.”1”)

- Use the selector to activate (fig.71/C Pos.”1”).

The selector indicator light switches on to indicate successful activation.

- *ATTENTION*:

Worn blades may obstruct vision and scratch the glass.

REAR WINDSCREEN WIPER CONTROL
(fig.71/C Pos.”2”)

- Use the selector to activate (fig.71/C Pos.”2”).
- Press and hold the selector to activate rear windscreen wipers.

The selector indicator light switches on to indicate successful activation.

- *ATTENTION*:

Worn blades may obstruct vision and scratch the glass.

EMERGENCY LIGHTS SELECTOR
(fig.71/C Pos.”3”)

Use the selector (fig.71/C Pos.”3”) to activate emergency lights (direction indicators are fully lit in flashing mode).

The selector indicator light switches on to indicate successful activation.

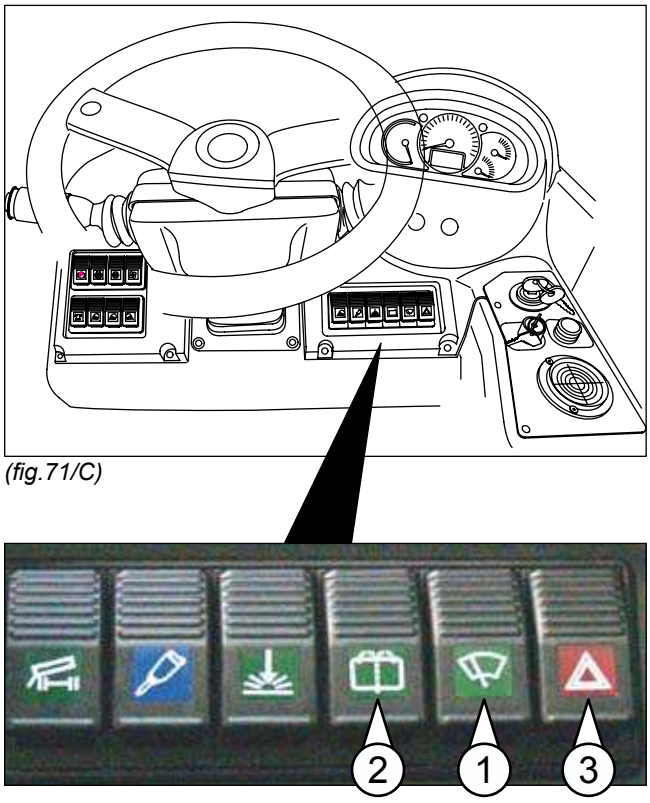

(fig.71/C)

MANUAL ACCELERATOR
(fig.72/C Pos.”1”)

Allows the operator to accelerate engine RPMs and keep them constant without pressing the accelerator pedal.

- Move the knob forward to increase engine RPMs.
- Move the knob backward to decrease engine RPMs.

- *ATTENTION*:

When the vehicle must be switched off, the engine RPMs must be reduced to a minimum.

- *ATTENTION*:

Increasing RPMs, the vehicle may move without accelerator pedal having been pressed.
Use the manual accelerator only when using the vehicle with the parking brake engaged.

Always bring the manual accelerator (fig.72/C Pos.”1”) **to the starting position (engine at minimum RPMs) before disengaging the parking brake. The vehicle may start suddenly, causing risk of damage.**

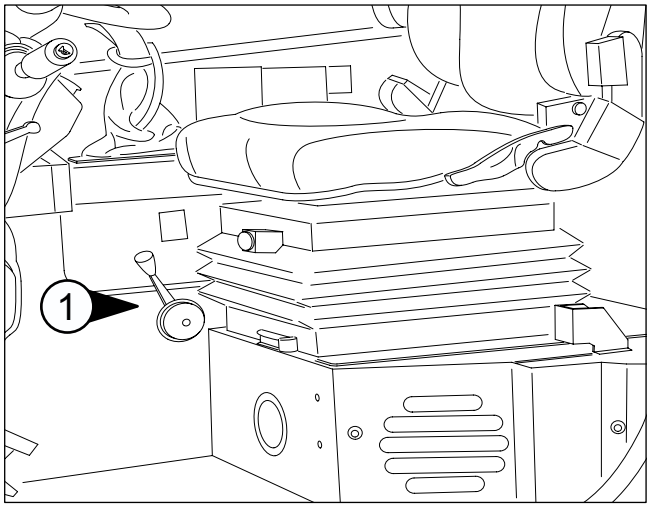

(fig.72/C)

- ATTENTION: - Read the SAFETY REGULATIONS (contained in this manual) carefully for the safety of all personnel and your vehicle.

Courtesy of Crane.Market

https://truckmanualshub.com/

INTERNAL CAB VENTILATION

To activate ventilation, press the push button (fig.73/C Pos."1").

The positions indicate, respectively:

- Off
- First speed
- Second speed

- To open the air vents (fig.74/C, fig.75/C, pos."1") press down on one side of the vent and adjust the air flow direction with the tabs or turning the vent itself.
- To close the vents, push the tabs until they are in a horizontal closed position.

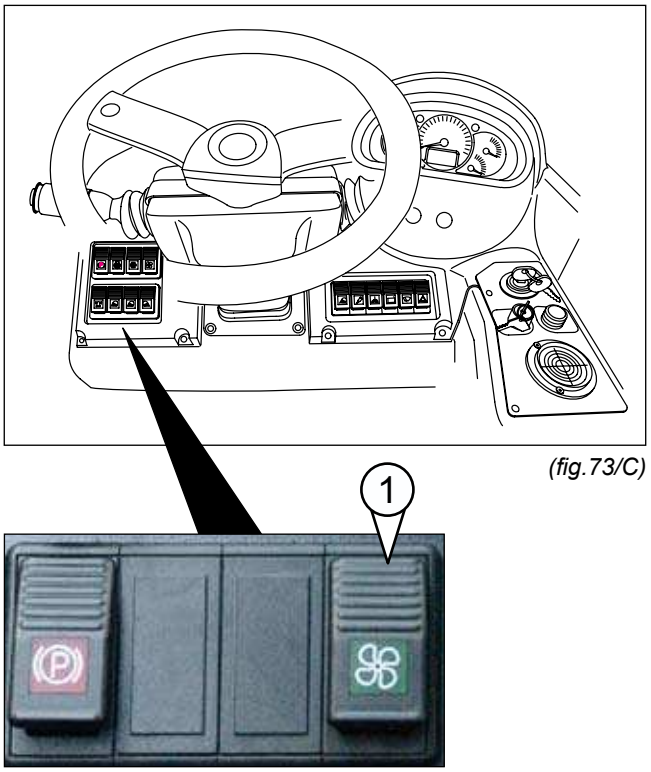

(fig.73/C)

Air temperature adjustment
(fig.76/C Pos."1")

To adjust the temperature of the air coming from the vents, turn the knob (fig.76/C Pos. "1").
Turn the knob clockwise upwards to increase the temperature.
Turn the knob anti-clockwise downwards to decrease the temperature, bringing it near the external one.

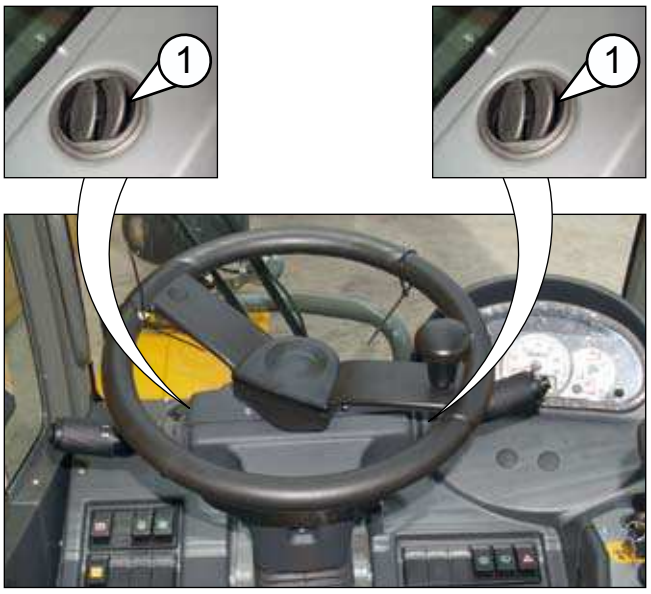

(fig.74/C)

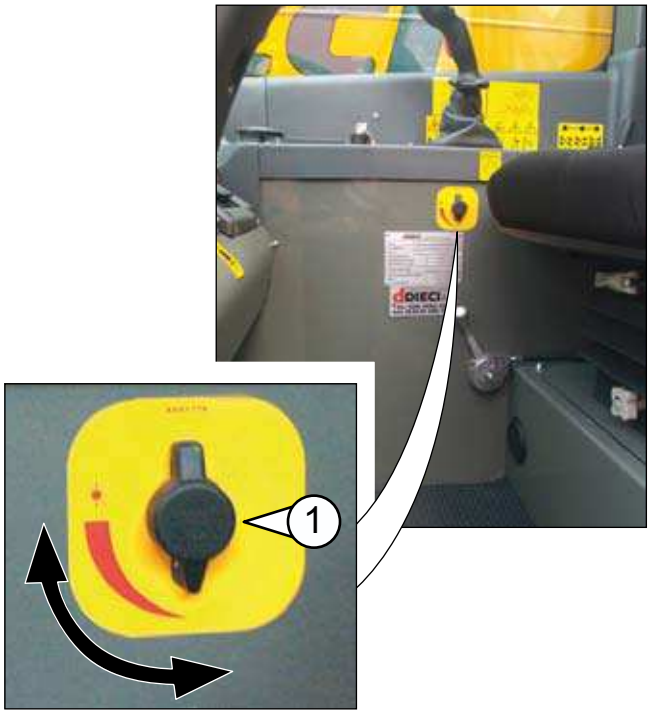

(fig.76/C)

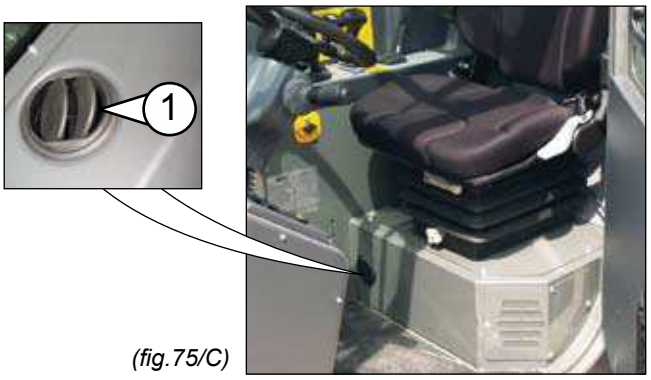

(fig.75/C)

- ATTENTION: - Read the SAFETY REGULATIONS (contained in this manual) carefully for the safety of all personnel and your vehicle.

Courtesy of Crane.Market

https://truckmanualshub.com/

AIR CONDITIONING (OPTIONAL)

System operation:

1. Check that all doors and windows are closed.
2. Ensure that the heater is switched off by turning the knob downwards.
3. With the engine on, switch on the air conditioning (fig.77/C Pos.”1”) and the fan (fig.77/C Pos.”2”). Simply switching on the air conditioning, using the same switch, will automatically activate the fan in first speed. When the ventilation switch is on, it will be possible to select the second and third air speeds.
4. Open and adjust vents to obtain ideal cooling with regard to environment temperature. Increase or decrease fan speed to obtain desired conditions.

Should the air conditioning system not function properly, immediately inspect the condenser located on the outside of the cab above the emergency exit (fig.78/C Pos.”1”).

***- ATTENTION*:**

Switch on the air conditioning every 15 days, even in the colder months, with the engine running at minimum (without accelerating). In this way, the moveable parts like the compressor and the general system can be lubricated.

***- ATTENTION*:**

Keep the condenser clean to keep the conditioning system working efficiently (fig.78/C Pos.”1”).

***- ATTENTION*:**

DO NOT loosen any of air conditioning system’s tubes because skin contact with coolant can cause freezing.

***- ATTENTION*:**

Consult chapter “D” for system cleaning and maintenance.

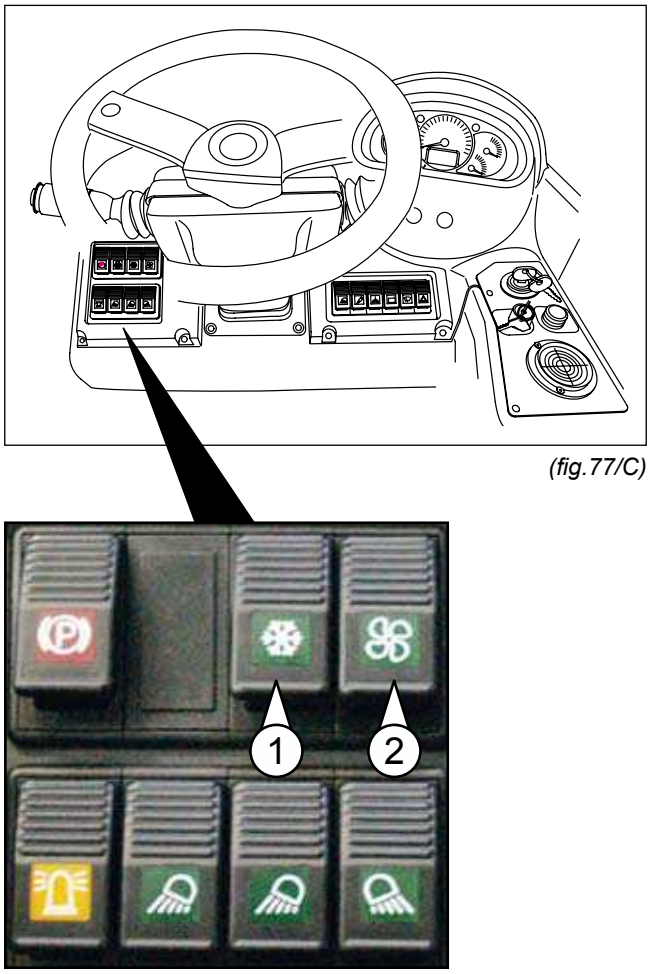

(fig.77/C)

(fig.78/C)

- ATTENTION: - Read the SAFETY REGULATIONS (contained in this manual) carefully for the safety of all personnel and your vehicle.

Courtesy of Crane.Market

https://truckmanualshub.com/

REVOLVING LIGHT SWITCH
(fig.80/C Pos.”3”)

The revolving light must always be positioned above the driver’s cab (fig.81/C Pos. “2”) and must always be in operation both at the work site and when driving on roads.

- Position the revolving light on the driver’s cab (fig.81/C Pos.”2”).
- Plug the power plug in the socket at the rear of the cab (fig.81/C Pos.”4”).
- To switch on the revolving light push the button ”3” (fig.80/C). The indicator light on the same switch indicates start-up.

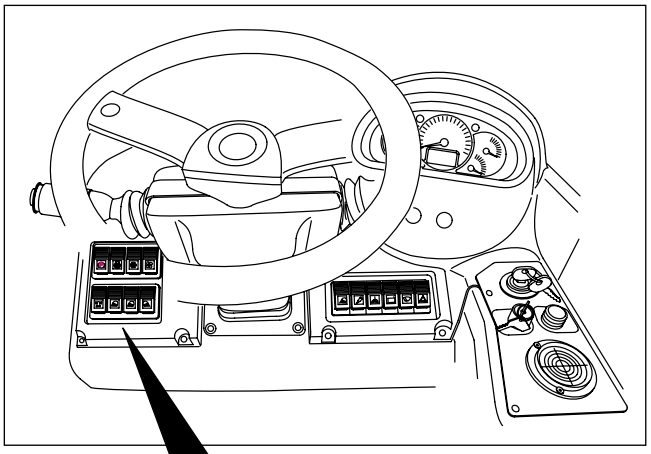

(fig.80/C)

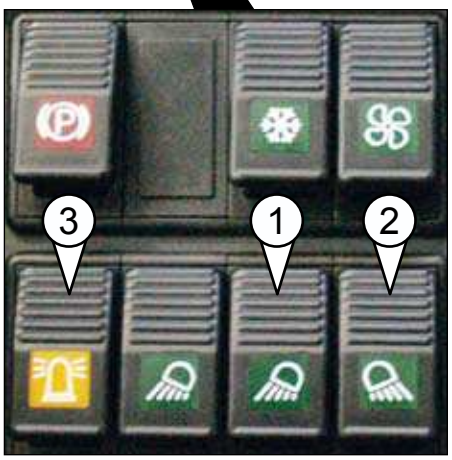

FRONT CAB LIGHTS SWITCH (OPTIONAL)
(fig.81/C Pos.”3”)

Use the switch (fig.80/C Pos.”B”) to turn on the cab front working lights (fig.81/C Pos. “3”).
The indicator light switches on to indicate successful activation.

REAR CAB LIGHTS SWITCH (OPTIONAL)
(fig.81/C Pos.”1”)

Use the switch (fig.80/C Pos.”2”) to turn on the rear cab working lights (fig.81/C Pos.”1”). The indicator light switches on to indicate successful activation.

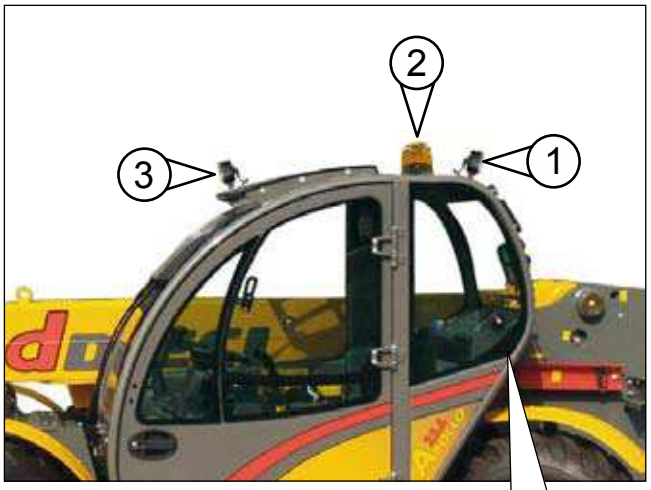

(fig.81/C)

Courtesy of Crane.Market

https://truckmanualshub.com/

BOOM HEAD LIGHT SWITCH (OPTIONAL)

(fig.84/C Pos.”1”)

Use the switch (fig.84/C Pos.”1”) to turn on the boom head light (fig.85/C Pos.”1”).
The indicator light switches on to indicate successful activation.

Two work lights, one on the right side and the other on the left side of the boom, can be installed upon client request.

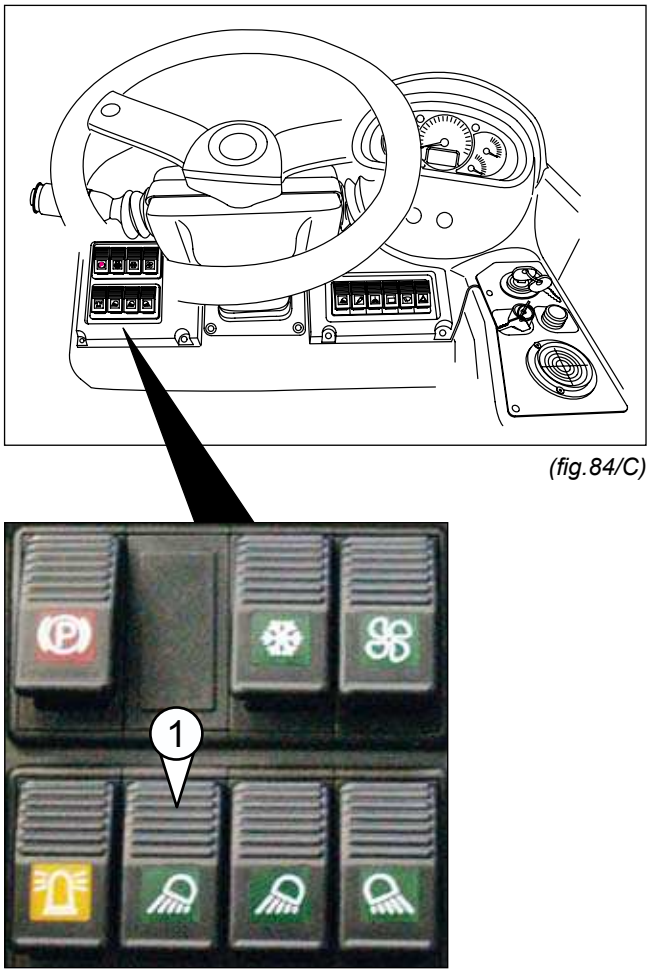

(fig.84/C)

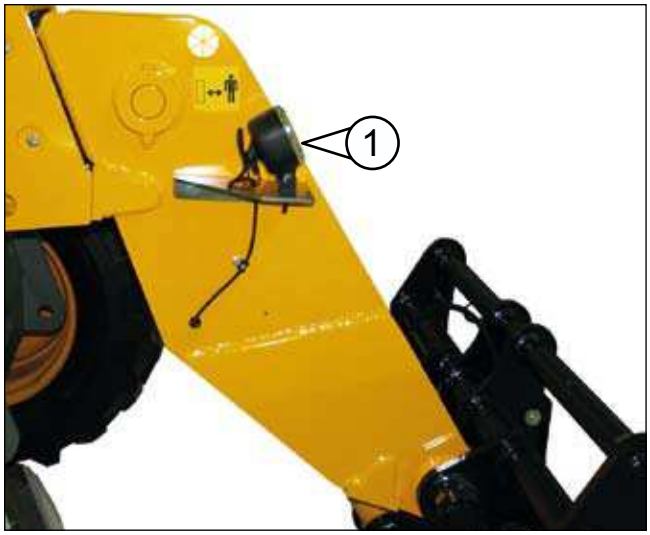

(fig.85/C)

- ATTENTION: - Read the SAFETY REGULATIONS (contained in this manual) carefully for the safety of all personnel and your vehicle.

Courtesy of Crane.Market

https://truckmanualshub.com/

BOOM HEAD SOLENOID VALVE (OPTIONAL)

(fig.91/C Pos.”1”)

The switch is only installed in the presence of the boom head solenoid valve (fig.91/C Pos.”1”).
When using the solenoid valve it is possible to have divided hydraulic controls on the boom head.

- Activate the push button (fig.90/C Pos.”A”) to power the solenoid valve, which will deviate oil flow. The indicator light on the same switch indicates start-up.

The selector (fig.90/C Pos.”A”) is used parallely to normal service controls. First, choose the selector where oil flow will deviate from, then carry out manoeuvres with the routine service controls.

***- ATTENTION*:**

Before starting any operations, verify function by means of corresponding switches.

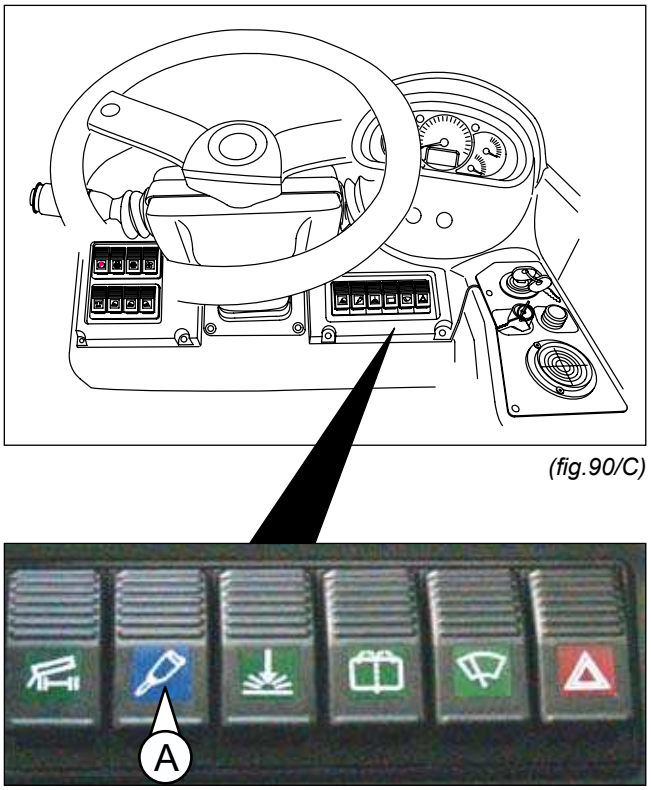

(fig.90/C)

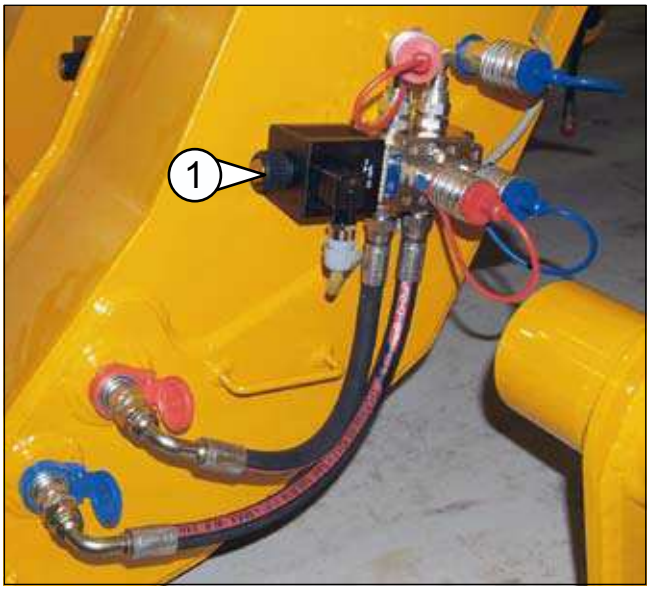

(fig.91/C)

Courtesy of Crane.Market

https://truckmanualshub.com/

REAR HYDRAULIC SOCKETS (OPTIONAL)

(fig.93/C Pos.”1”)

Located at the rear of the vehicle (fig.93/C Pos.”1”).

- Press the relative switch to deviate oil to the rear hydraulic sockets (fig.92/C Pos.”1”). The indicator light on the same switch indicates start-up.

The rear hydraulic sockets operate using the Joystick service controls in the cab.

***- ATTENTION*:**

Before starting any operations, verify function by means of corresponding switches.

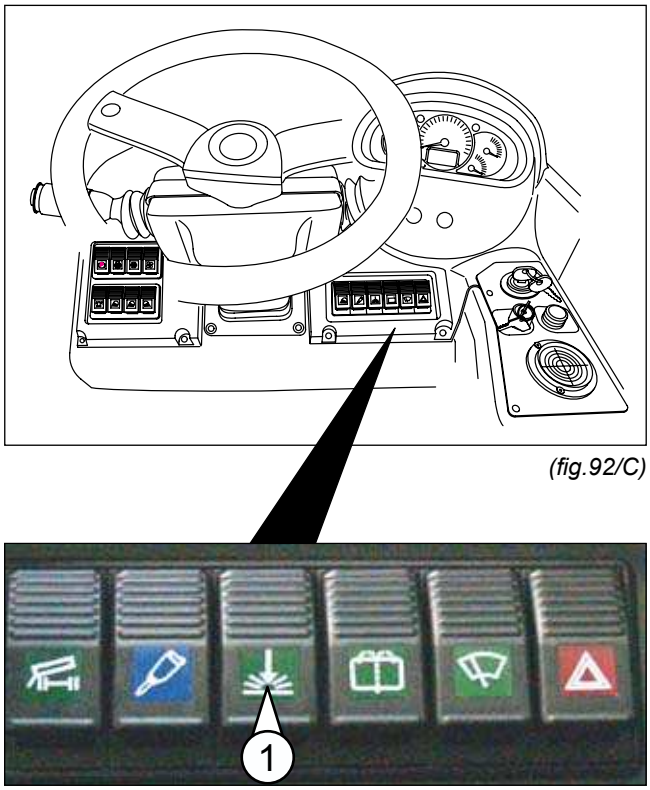

(fig.92/C)

(fig.93/C)

- ATTENTION: - Read the SAFETY REGULATIONS (contained in this manual) carefully for the safety of all personnel and your vehicle.

Courtesy of Crane.Market

https://truckmanualshub.com/

DUMP BODY LOWERING (OPTIONAL)

The dump body lowering switch controls the solenoid valve which causes the discharging of the rear hydraulic socket and consequently the return of the extension of raising/lowering cylinder.

Activate dump body lowering using the relevant switch (fig.96/C pos."A"). The indicator light on the same switch indicates start-up.

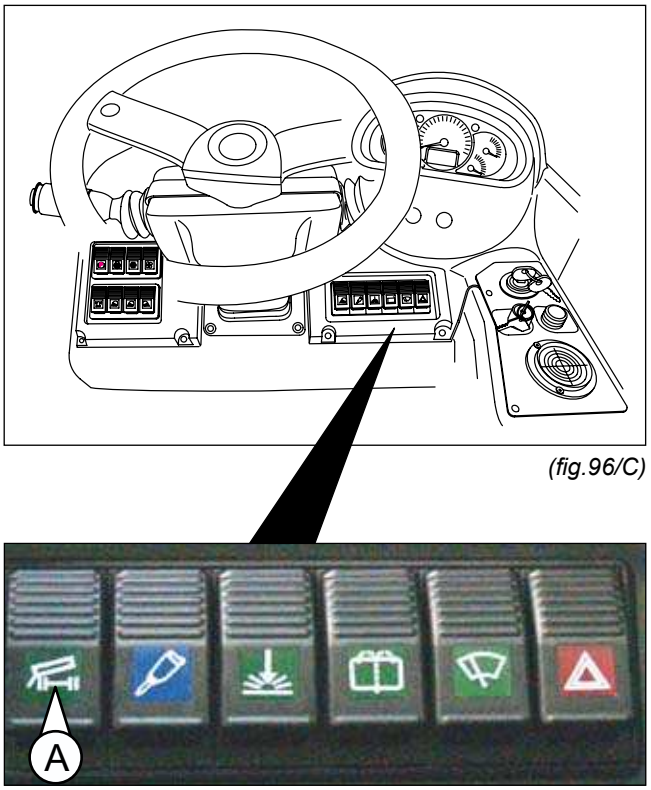

(fig.96/C)

- *ATTENTION*:

Before moving the vehicle with the dump body:

- Verify its correct operation (brake system, signalling system, hydraulic system).
- Verify that the dump body conforms to all laws relevant in country where the vehicle is being used.

- *ATTENTION*:

When handling the dump body (lifting, lowering, moving), verify that no one is nearby. Risk of being crushed.

Courtesy of Crane.Market

https://truckmanualshub.com/

WATER HEATER (OPTIONAL)
(fig.100/C Pos."1")

Located at the rear of the bonnet.

- *ATTENTION*:

Before switching on the water heater, carry out the operations included in Chapter B "STOPPING UPON COMPLETION OF WORK"

System operation:

1. Plug in connector "A" into socket "B" located in the rear part of the engine bonnet (fig.101/C).
2. Insert plug "C" into the electric socket (fig.101/C).

The heater is connected to its own control unit and maintains engine water at a temperature higher than the external temperature (in cold climates).

In the event of malfunction contact a ***DIECI*** service centre.

- *ATTENTION*:

Verify the good conditions of the power supply cable before starting up the device.

- *ATTENTION*:

Do not use the water heater with the engine on and while the vehicle is moving.

- *ATTENTION*:

Remove water heater power supply before switching on and moving the vehicle.

(fig.100/C)

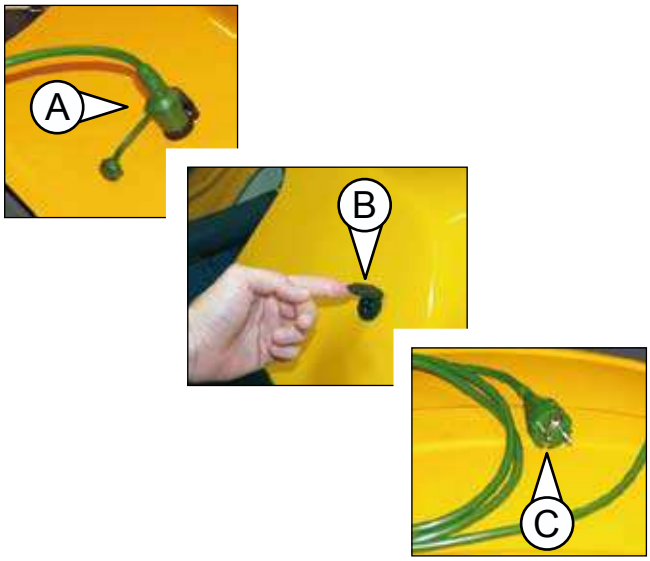

(fig.101/C)

7-POLE ELECTRIC SOCKET FOR TRAILER (OPTIONAL)
(fig.102/C Pos."A")

Located at the rear of the vehicle.

- *ATTENTION*:

Before moving the vehicle with the trailer:

- Ensure that the brake and signalling systems are functioning properly.
- Verify that the trailer conforms to regulations in force in the country where the vehicle is being used.

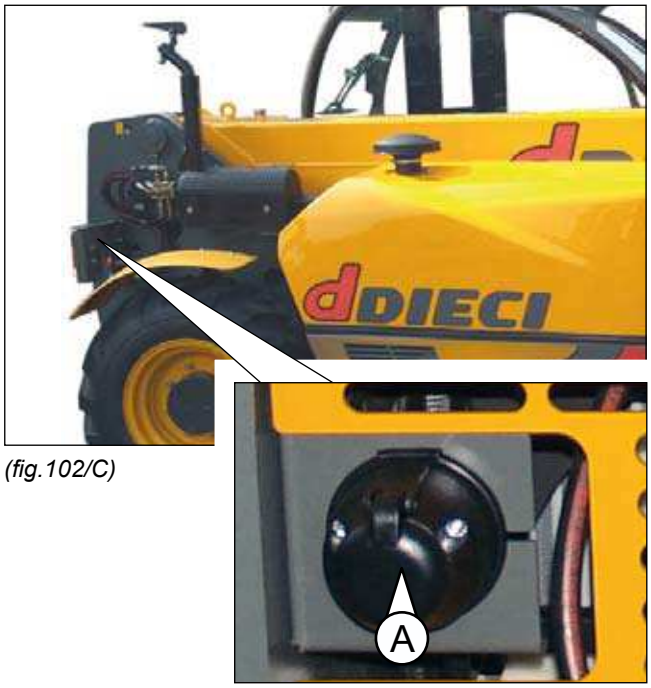

(fig.102/C)

- ATTENTION: - Read the SAFETY REGULATIONS (contained in this manual) carefully for the safety of all personnel and your vehicle.

Courtesy of Crane.Market

https://truckmanualshub.com/

FRONT HOOK
(fig.103/C Pos.”A”)

If located at the rear of the vehicle, it can have different load capacities depending on client needs.
Consult the vehicle registration document to verify front hook load capacity.

Capacity is limited for each vehicle by the authorised circulating weight, by the towing weight and by the vertical strain of the towing pin. This information is detailed in the vehicle registration document.

The front hook clip (fig.103/C Pos.”1”) has been properly positioned and locked when the guide pin is in position “3” (fig.103/C) and is locked by its cotter pin “2” (fig.103/C).

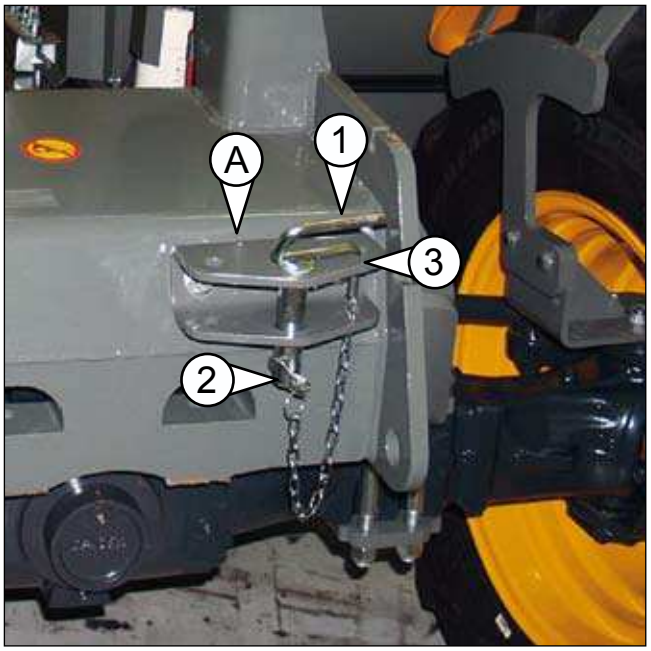

(fig.103/C)

Courtesy of Crane.Market

https://truckmanualshub.com/

TOWING HOOK
(fig.104/C Pos.”A”)

If located at the rear of the vehicle, it can have different load capacities depending on client needs.
Consult the vehicle registration document to verify rear hook load capacity.

Capacity is limited for each vehicle by the authorised circulating weight, by the towing weight and by the vertical strain of the towing pin. This information is detailed in the vehicle registration document.

Only “Agricultural Tractors” are permitted to driving on the road with a trailer.

Verify proper locking pin position before moving the vehicle with the trailer.
The rear hook clip (fig.104/C Pos.”1”) has been properly positioned and locked when it goes through both parts of the hook (fig.105/C) and is locked by its cotter pin “1” (fig.105/C).

***- ATTENTION*:**

Before moving the vehicle with the trailer:

- Ensure that the brake and signalling systems are functioning properly.
- Verify that the trailer conforms to regulations in force in the country where the vehicle is being used.
- Make sure that the cotter pin is properly inserted (fig.105/C Pos.”1”).

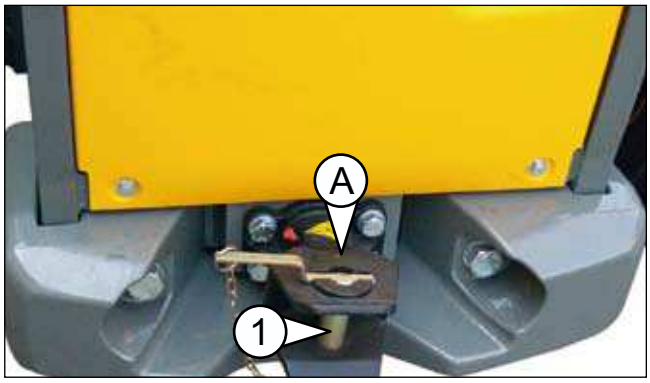

(fig.104/C)

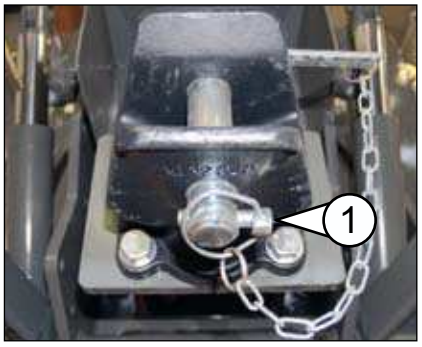

(fig.105/C)

- ATTENTION: - Read the SAFETY REGULATIONS (contained in this manual) carefully for the safety of all personnel and your vehicle.

Courtesy of Crane.Market

https://truckmanualshub.com/

COURTESY COMPARTMENT
(fig.106/C)

Located at the front of the vehicle is a courtesy compartment (fig.106/C Pos.”1”).
Lift the front of the guard to open the compartment (fig.106/C Pos.”2”).
The compartment can be padlocked with key/combination using own set-ups (fig.106/C Pos.”3”).

In case of maintenance of front axle the compartment bottom can be removed by loosening the bolts.

- *ATTENTION*:

Open the compartement with vehicle still, engine off and parking brake engaged.

- *ATTENTION*:

The guard does not have any retainer mechanism in the open position, pay attention is this may suddenly close injuring the operator. Danger of crushing between the courtesy compartment guard and the machine chassis.

- *ATTENTION*:

The vehicle can be used only with courtesy compartment closed.

- *ATTENTION*:

The courtesy compartment cannot be used for transporting living creatures, flammable, explosive material.

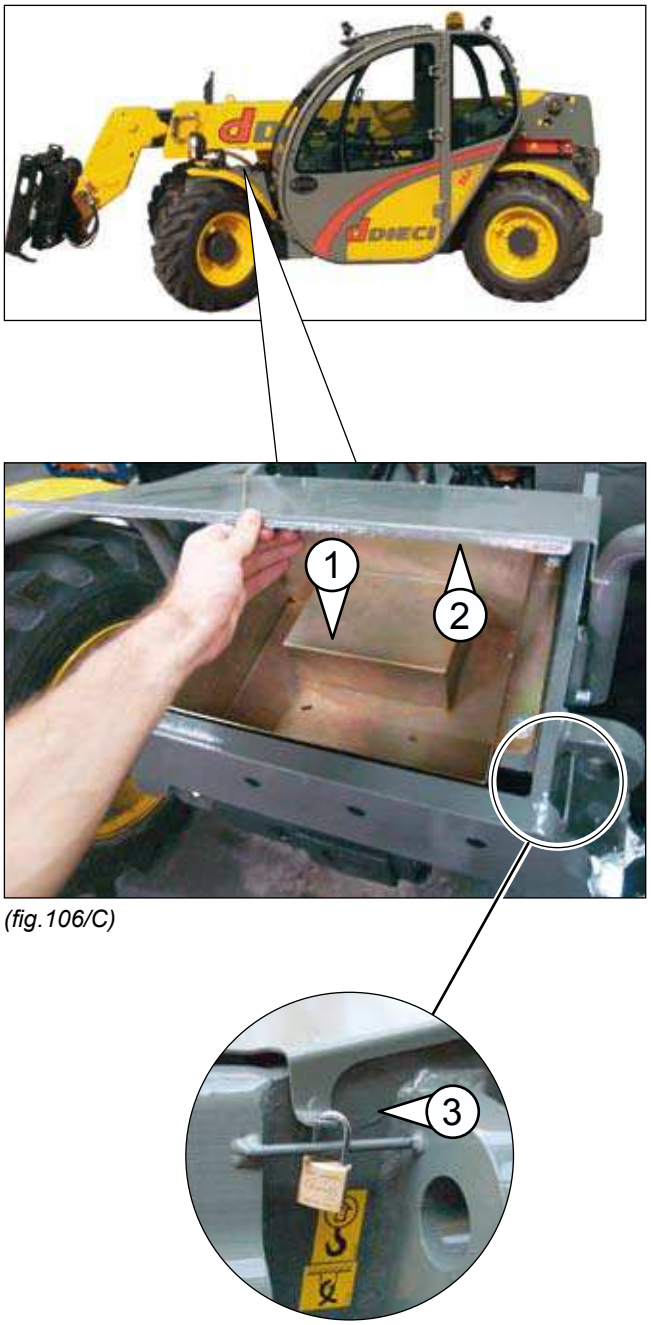

(fig.106/C)

Courtesy of Crane.Market

https://truckmanualshub.com/

TOWING THE VEHICLE

The vehicle may only be towed in an emergency and at low speed (max 4 km/hour) and for short distances (max 500 m).

The operations to be carried out are as follows:

- Put the gear in neutral.
- Disengage the negative parking brake
- Connect the towing bracket between the towing vehicle and the broken down vehicle.

- ATTENTION -

Never attempt to start the vehicle by towing or pushing.

***- ATTENTION*:**

With engine off, the steering servo-control does not work. If the engine cannot be kept running, during towing keep in mind that it will be much more difficult to operate the steering wheel. When the vehicle has been started, position the gearbox in neutral (idle) before starting towing.

The parking brake is engaged with the engine switched off. If the engine cannot be kept running during vehicle towing, disengage the parking brake manually, following the instructions given in paragraph “Disengagement of Parking Brake with engine switched off”.

***- ATTENTION*:**

With engine running during towing, remain seated in the driver’s seat to prevent the parking brake from engaging automatically.

The towing bracket must be connected to the vehicle towing setups marked by corresponding symbols (fig.140/C, fig.141/C).

***- ATTENTION*:**

THE vehicle must be towed with a towing bracket.
The towing bracket must be able to support a towing weight of 10,000 Kg.

Do not tow the vehicle on public roads and for long distances. If possible, keep the yellow flashing lights and emergency lights on. Do not tow the vehicle on a slope.

- ATTENTION -

Do not stand between the towing vehicle and the towed vehicle.

- ATTENTION -

It is recommended to have the operations described above performed by expert staff.

(fig.140/C)

(fig.141/C)

- ATTENTION: - Read the SAFETY REGULATIONS (contained in this manual) carefully for the safety of all personnel and your vehicle.

Courtesy of Crane.Market

https://truckmanualshub.com/

PROCEDURE FOR PUTTING THE VEHICLE IN NEUTRAL AND EXCLUDE THE NEGATIVE PARKING BRAKE

putting the gear shift in neutral

1. Switch the engine off.

2. Turn the lever (fig.142/C Pos.”1”) of the hydraulic valve on the hydrostatic motor counter clockwise towards the vehicle cab, bringing it to the closed position.

***- ATTENTION*:**

Before towing the vehicle, switch on the dashboard and ensure that the pilot light “gear engaged” on the central dashboard is switched off and that the letter “N” appears on the LCD Display.

- ATTENTION -

Once the maintenance/transport operations have been completed, reopen the valve, bringing it back to its original position (fig.142/C).

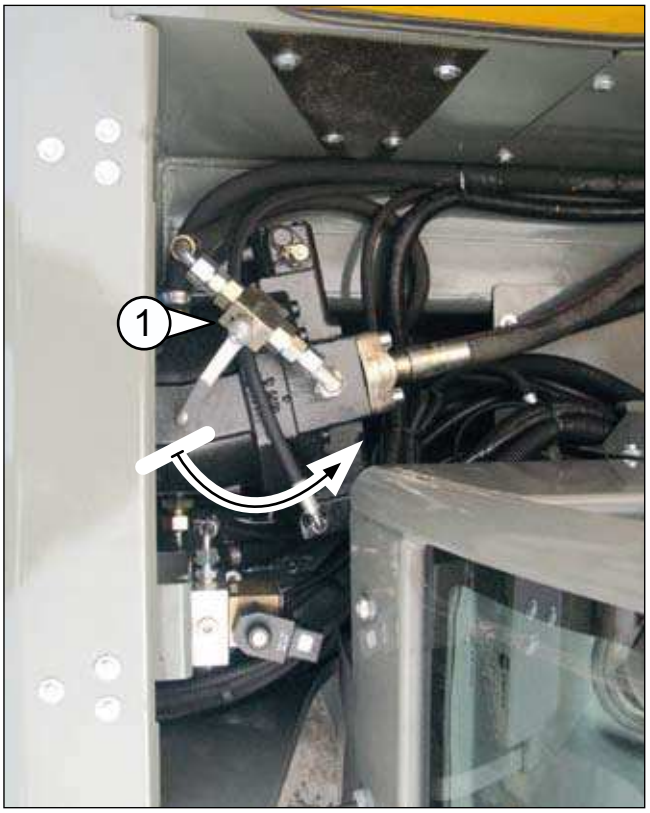

(fig.142/C)

Courtesy of Crane.Market

https://truckmanualshub.com/

Disengaging the negative parking brake with the engine stopped

1° Loosen the screws on both sides (fig.143/C-144/C pos."1") of the centre part of the front axle (Do not completely loosen the screws; loosen them only enough so that described in point 2 can be carried out).

2° Remove the "U" shaped liners (fig. 145/C, pos."1").

3° Re-tighten screws until they fit into position. In these conditions it is possible to tow the vehicle.

4° To return the brake to working condition, return in to its original conditions.

- ATTENTION -

Once the maintenance/transport operations have been completed, place the brake back in working condition, restoring its original conditions.

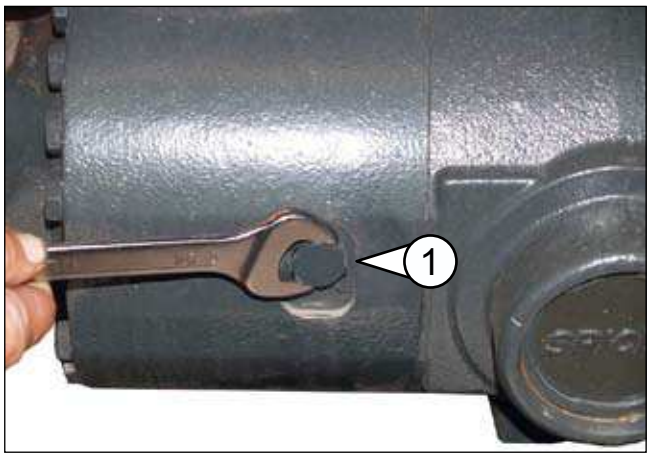

(fig.143/C)

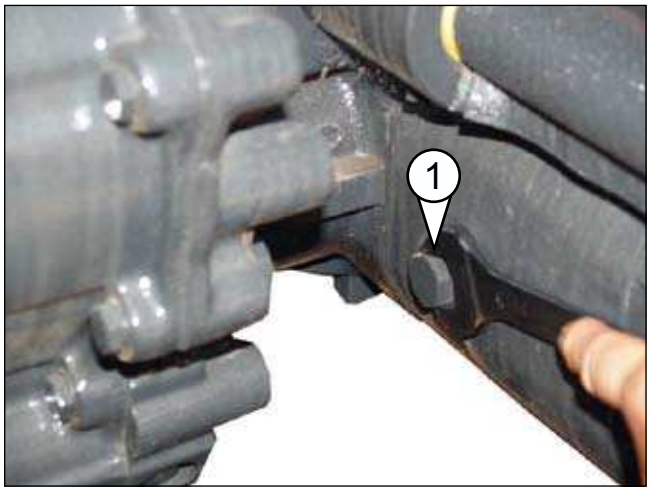

(fig.144/C)

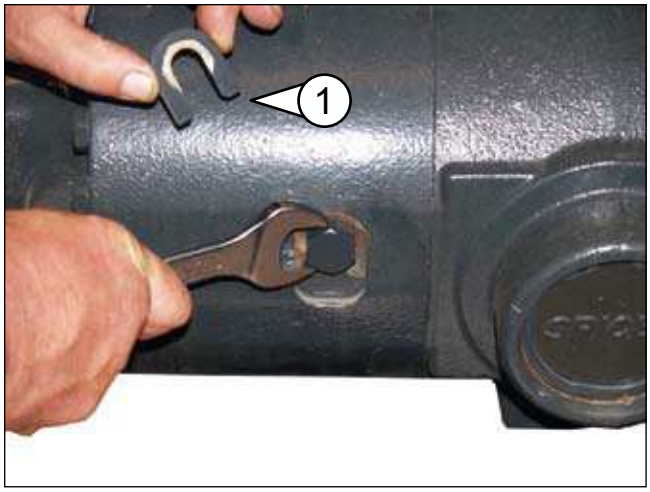

(fig.145/C)

- ATTENTION: - Read the SAFETY REGULATIONS (contained in this manual) carefully for the safety of all personnel and your vehicle.

Courtesy of Crane.Market

https://truckmanualshub.com/

CATALYTIC PURIFIER (OPTIONAL)
(fig.150/C)

Duration

As the catalyst is not actively involved in the chemical reaction it provokes, its life is theoretically unlimited. However, due to certain conditions such as: engines not perfectly tuned, vehicle vibrations and the abrasive effect of fumes on the support, the life of the catalyst may be shortened. In reality, the **duration** of the catalytic purifier is about **10,000 working hours**.

Maintenance

The catalyst is activated by the high temperature of the fumes which also prevents any particles from depositing on the honeycomb; less maintenance is, consequently, needed. It is advisable to clean the purifier **every 500 working hours**. Remove the catalyst and place it in a container with hot soapy water, making sure it is completely emerged. Leave it to soak for 5 hours, then wait for it dry completely (a gentle jet of compressed air could possibly be used to speed up drying) and remount.

(fig.150/C)

WATER DRIVEN PURIFIER (OPTIONAL)
(fig.151/C)

The water driven purifier is manufactured entirely in stainless steel with titanium and is resistant to high temperatures and to corrosive sulphurous compounds which are present in the exhaust fumes.

It consists of a horizontal cylindrical body (sized according to engine power) which makes up the water tank, two mounting brackets and a cylindrical tower located on the upper part of the water tank that contains the separator.

The gases are directed through an entry tube to the interior part of the purifier and then passed to the water. The carbonaceous particles become heavier upon contact with the water and fall to the bottom of the water tank. The gases are then directed towards the separator which recovers the carbonaceous particles that have not fused with the water. The white smoke emitted from the exhaust is simply water vapour.

Maintenance

Maintenance of the water driven purifier is **EXTREMELY IMPORTANT** and the water must be **changed** every **8 working hours.** The tank must be emptied using the spherical drain valve and clean water must be added through the loading and level cock.

The black sludge which comes out when changing the water is proof of the purifier's effectiveness. **Every 300 working hours** the purifier must be **cleaned**: drain the water and clean the inside for a few minutes using a pressurised jet. ***DIECI*** also provides the additive TAM which, if added to the water at every change, helps to keep the purifier clean. TAM also improves the performance of the purifier: it neutralises sulphuric acids.

(fig.151/C)

Courtesy of Crane.Market

https://truckmanualshub.com/

macchine edili ed agricole

dDIECI

- ATTENTION: - Read the SAFETY REGULATIONS (contained in this manual) carefully for the safety of all personnel and your vehicle.

Courtesy of Crane.Market

https://truckmanualshub.com/

- ATTENTION: - Read the SAFETY REGULATIONS (contained in this manual) carefully for the safety of all personnel and your vehicle.

Courtesy of Crane.Market

https://truckmanualshub.com/

macchine edili ed agricole

dDIECI

- ATTENTION: - Read the SAFETY REGULATIONS (contained in this manual) carefully for the safety of all personnel and your vehicle.

Courtesy of Crane.Market

https://truckmanualshub.com/

- ATTENTION: - Read the SAFETY REGULATIONS (contained in this manual) carefully for the safety of all personnel and your vehicle.

Courtesy of Crane.Market

https://truckmanualshub.com/

macchine edili ed agricole

dDIECI

- ATTENTION: - Read the SAFETY REGULATIONS (contained in this manual) carefully for the safety of all personnel and your vehicle.

Courtesy of Crane.Market

https://truckmanualshub.com/

USER INSTRUCTIONS AND GETTING TO KNOW THE VEHICLE

INTEGRATED DEVICES

“CENTRAL DASHBOARD”

Courtesy of Crane.Market

https://truckmanualshub.com/

EVERY MODIFICATION MADE TO THE VEHICLE LEADS TO A NEW VERIFICATION OF CONFORMITY WITH THE 98/37 MACHINERY DIRECTIVE. "CE" THIS PROCEDURE IS ALSO VALID IN THE CASE OF REPAIRS WITH NON-ORIGINAL SPARE PARTS.

IT IS PROHIBITED TO OPERATE IF THIS MANUAL HAS NOT BEEN READ AND UNDERSTOOD.

THE OPERATOR IS REQUIRED TO LEARN THE LOCATION AND FUNCTION OF ALL INSTRUMENTS AND CONTROLS, INDEPENDENT OF HIS OR HER EXPERIENCE IN THE FIELD, BEFORE OPERATING THE VEHICLE.

THE IMAGES, DESCRIPTIONS, MEASUREMENTS STATED IN THIS CHAPTER REFER TO STANDARD VEHICLES.

YOUR VEHICLE CAN BE SET-UP WITH OPTIONAL CONTROLS AND ACCESSORIES ON REQUEST.

ALL FUNCTIONS AND PROCEDURES CONCERNING THE OPERATION AND MOUNTING OF THE VEHICLE'S ATTACHMENTS THAT ARE NOT DESCRIBED IN THIS MANUAL ARE STRICTLY FORBIDDEN.

USE OF THE VEHICLE DIFFERENT TO THAT DESCRIBED IN THIS MANUAL IS PROHIBITED.

IT IS MANDATORY TO HAVE READ AND LEARNED CHAPTER "B" (SAFETY STANDARDS) BEFORE READING CHAPTER "C" AND USING THE VEHICLE.

- ATTENTION: - Read the SAFETY REGULATIONS (contained in this manual) carefully for the safety of all personnel and your vehicle.

Courtesy of Crane.Market

https://truckmanualshub.com/

LCD

The following functions will be shown on the display:

- Timer (6 characters of which one a decimal point plus hourglass) (fig.200/C pos.”C”).
- Clock (4 characters) (fig.200/C pos.”A”).
- Speedometer (3 characters of which one a decimal point plus km/h, m/h and mph) (fig.200/C pos.”C”).
- Hodograph (6 characters of which one a decimal point plus km and miles) (fig.200/C pos.”C”).
- Neutral gear engaged (fig.200/C pos.”B”).
- Engine errors (Large E flashing + 3 characters at top) (fig.200/C pos.”A”, fig.200/C pos.”B”, fig.200/C pos.”C”)
- Service (Large S flashing + n° hors missing to service) (fig.200/C pos.”A”, fig.200/C pos.”B”)

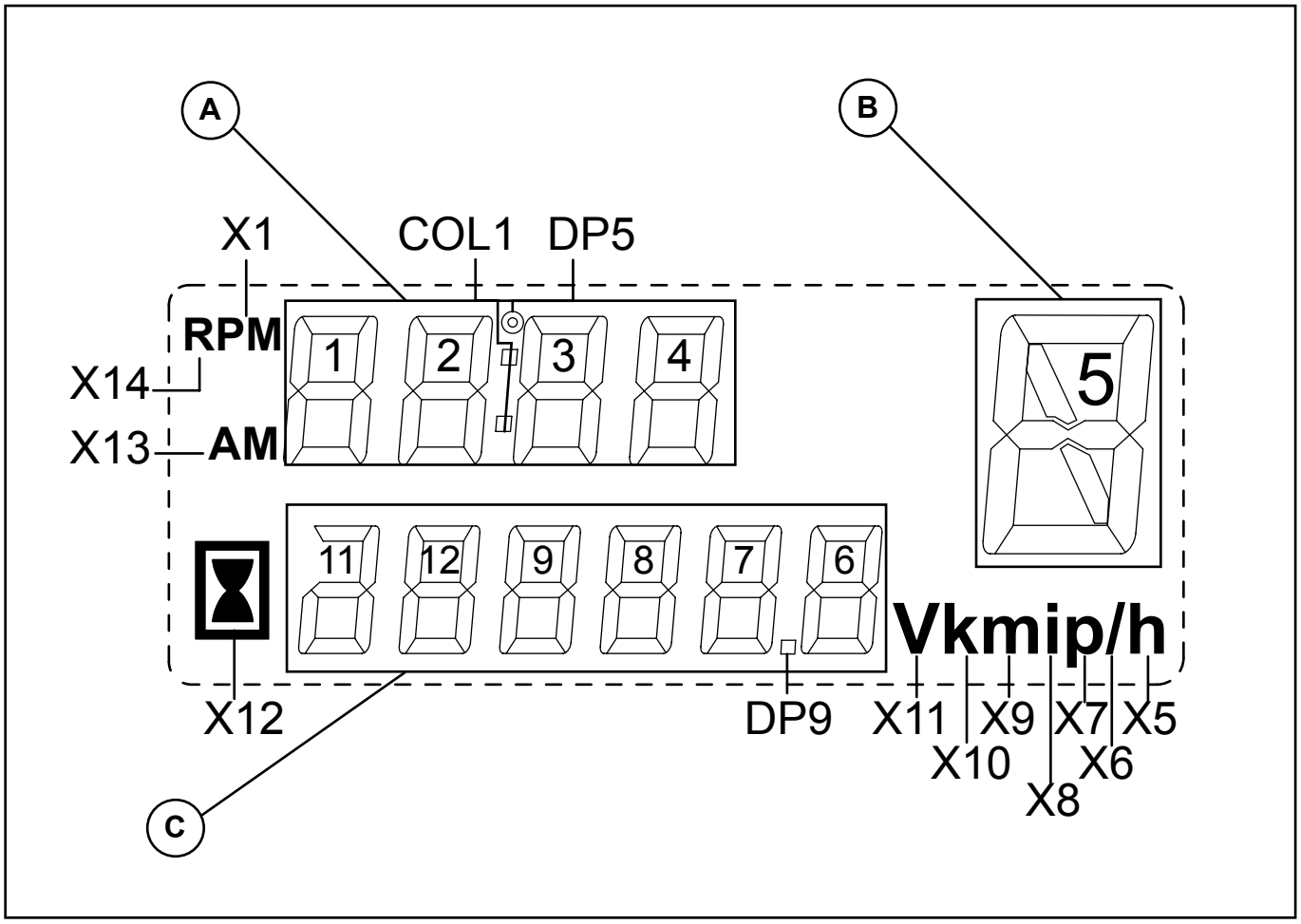

(fig.200/C)

Speedometer (optional)

The speedometer allows to display the speed of the vehicle in real time.

Hodograph (optional)

The hodograph allows to display the kilometres travelled by the vehicle. The instrument is combined with the speedometer

Courtesy of Crane.Market

https://truckmanualshub.com/

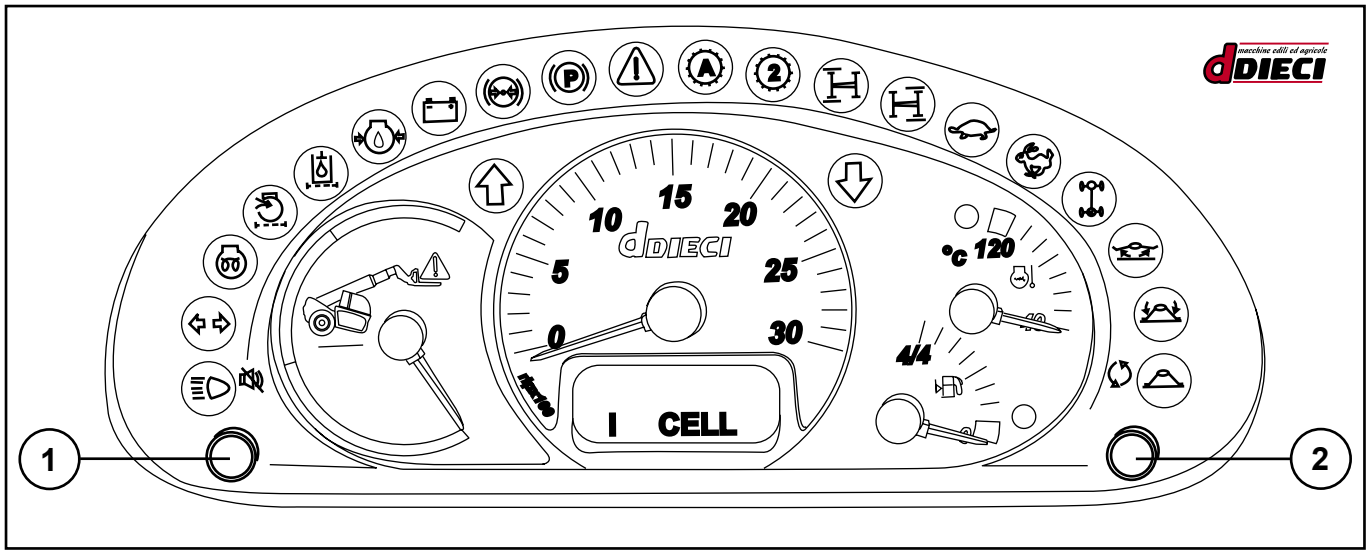

(fig.201/C)

BUTTONS

There are two integrated buttons on the panel:

- Button “1” (fig.201/C) temporarily prevents the acoustic signal (buzzer) of the anti-tipping system, anti-tipping system test.
- Button “2” (fig.201/C) changes the display.

Changing display visualisation

By pressing key ”2” (fig.201/C) display visualisation is changed cyclically following the logic below:

1. Timer and clock.
2. Speed and clock.
3. Hodograph and clock.
4. Timer and clock.

The normal visualisation of the display will be Clock and Hour counter. In the case of installation of the speedometer, the display will automatically pass to the Clock and Speed display.

Clock regulation

To regulate the clock:

- Switch off the dashboard.
- Press key “2” (fig.201/C) and hold it down.
- Switch the dashboard on
- Hold key “2” down (fig.201/C) for 1.5 seconds for the duration of the “check”.
- Now you are in “Regulation” mode

With minutes characters flashing, press:

- key “1” (fig.201/C) to increase the character.
- key “2” (fig.201/C) to confirm the selection.

With hours characters flashing, press:

- key “1” (fig.201/C) to increase the character.
- key “2” (fig.201/C) to confirm the selection.

The calibration check has ended and the instrument starts to work normally (excluding the initial check).

- ATTENTION: - Read the SAFETY REGULATIONS (contained in this manual) carefully for the safety of all personnel and your vehicle.

Courtesy of Crane.Market

https://truckmanualshub.com/

DASHBOARD INSTRUMENT INITIAL CHECK

On switch-on, the panel switches some indicator lights, the buzzer and all segments of the display on for the duration of 1.5. seconds. The tables are shown below (fig.202/C) that contain all dashboard indicator lights and their behaviour at the time of the check. The instruments (fig.203/C) carry out an initial check by moving the pointers and temporary switch-on of the corresponding LED. The LCD carries out complete temporary switch-on of all symbols that can be represented.

LEDS	INITIAL CHECK
	YES
	YES
	YES
	YES
	YES
	NO
	NO
	YES
	YES
	YES
	YES
	YES

LEDS	INITIAL CHECK
	YES
	YES
	YES
	YES
	YES
	YES
	YES
	YES
	YES
	YES
	YES
	YES

INSTRUMENTS	INITIAL CHECK
4/4	YES
°C 120	YES
	YES
10 15 20 5 25 0 30 dDIECI	YES
I CELL	YES

(fig.203/C)

(fig.202/C)

- ATTENTION: - Read the SAFETY REGULATIONS (contained in this manual) carefully for the safety of all personnel and your vehicle.

Courtesy of Crane.Market

https://truckmanualshub.com/

ANTI-TIPPING SYSTEM TEST

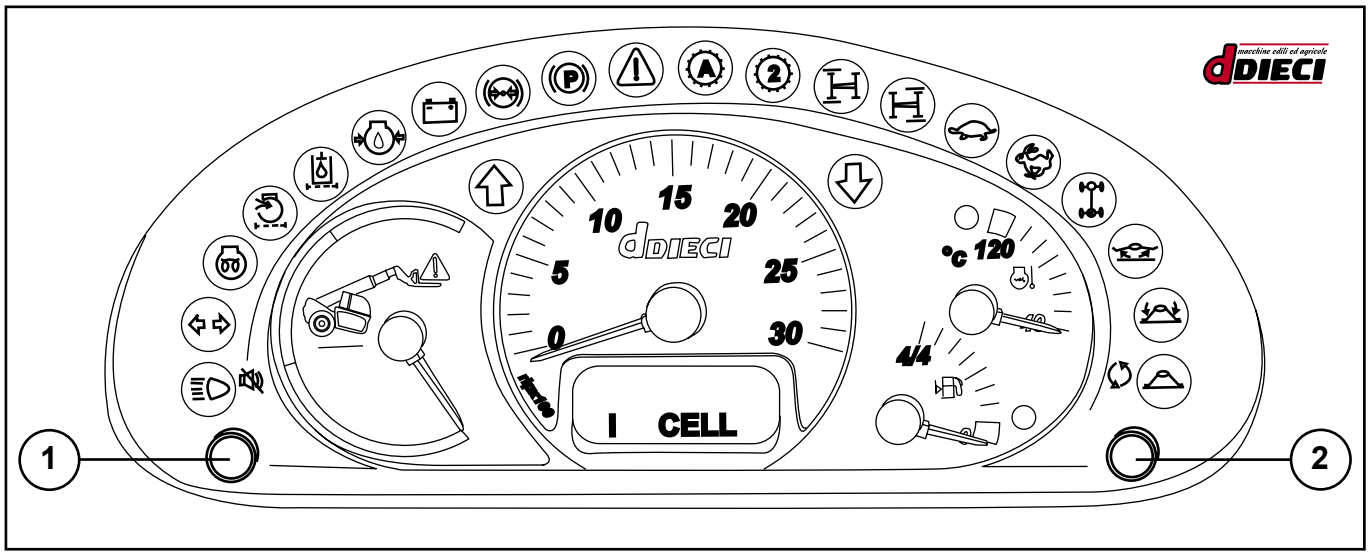

(fig.204/C)

Press and hold button “1” (fig.204/C) for 2 seconds, during normal functioning of the instrument, to carry out the anti-tipping system test.

The test consists in:

1. Indicator in start position 1st Green sector.
2. Indicator in end position 2nd Red sector.
3. Indicator in start position 1st Green sector.
4. Indicator in current work position.

The angular speed of the index during the test is 240 angular degrees in 2 sec. (120 degrees/sec).

ANTI-TIPPING SYSTEM MUTE

Press button “1” (fig.204/C) to suspend the acoustic signal due to an alarm of the anti-tipping system.
In the alarm zone (start of 1st Red sector start of 2nd Red sector) the acoustic signal must always be activated even if key “1” has been previously pressed (fig.204/C).

Example:

1. The indicator enters the 1st Red zone.
2. The buzzer starts to ring intermittently.
3. Pressing the last key suspends the acoustic signal.
4. The indicator continues to rise and enters the 2nd Red zone.
5. The buzzer starts to ring continuously. Pressing the last key suspends the acoustic signal.

- ATTENTION: - Read the SAFETY REGULATIONS (contained in this manual) carefully for the safety of all personnel and your vehicle.

Courtesy of Crane.Market

https://truckmanualshub.com/

GENERAL ALARM LED

The emergency indicator light/general alarm occur:

- in the event of engine error
- if one of the indicator lights indicated in the table below should switch on
- in the event of engine overrevving

Engine error

The engine has an electronic control unit that communicates directly with the central dashboard. The anomalies are signalled by the general alarm indicator light accompanied by the acoustic signal with duration of 1.5 seconds and the display of the error code on the LCD.

Switch-on of dashboard indicator lights

Some signal indicator lights, which are particularly important for the duration and use of the same in complete safety have been coupled to the general alarm indicator light (fig.205/C) with acoustic signal lasting 1.5 seconds. The acoustic signal functions only with the engine running. The signalling of alarms by the indicator light “1” (fig.205/C) has priority over other signals that this communicates.

	LED 1	LED 2	Acoustic signal (Buzzer)
Coupling 1			YES (1.5 seconds)
Coupling 2			YES (1.5 seconds)
Coupling 3			YES (1.5 seconds)
Coupling 4			YES (1.5 seconds)
Coupling 5			YES (1.5 seconds)

(fig.205/C)

Engine overrevving

The overrevving condition is signalled by reaching 3000rpm on the rev. counter.
The condition is signalled by the switch-on of the general alarm light intermittently and the acoustic signal (buzzer) continuously.
The alarm will stop when the engine has dropped below 3000rpm.

Courtesy of Crane.Market

https://truckmanualshub.com/

Engine errors

The engine errors are signalled by the switch-on of the “general alarm LED” with acoustic signal (buzzer) lasting 1.5 seconds and display of the error code on the LCD (fig.206 Pos.”3”). The error will remain displayed until the operator presses key “1” (fig.206/C) or “2” (fig.206/C) for 3 sec. The “general alarm indicator” will stay on until the error has ceased.
Pressing button “1” (fig.206/C) or “2” (fig.206/C) for 3 seconds, the error will no longer be displayed, but will be kept in the memory. Before displaying the second error, wait for 1 second. The presence of the error will be indicated by the buzzer for 1.5 seconds and the new error will be shown on the display. The same procedure must be used for all successive errors.

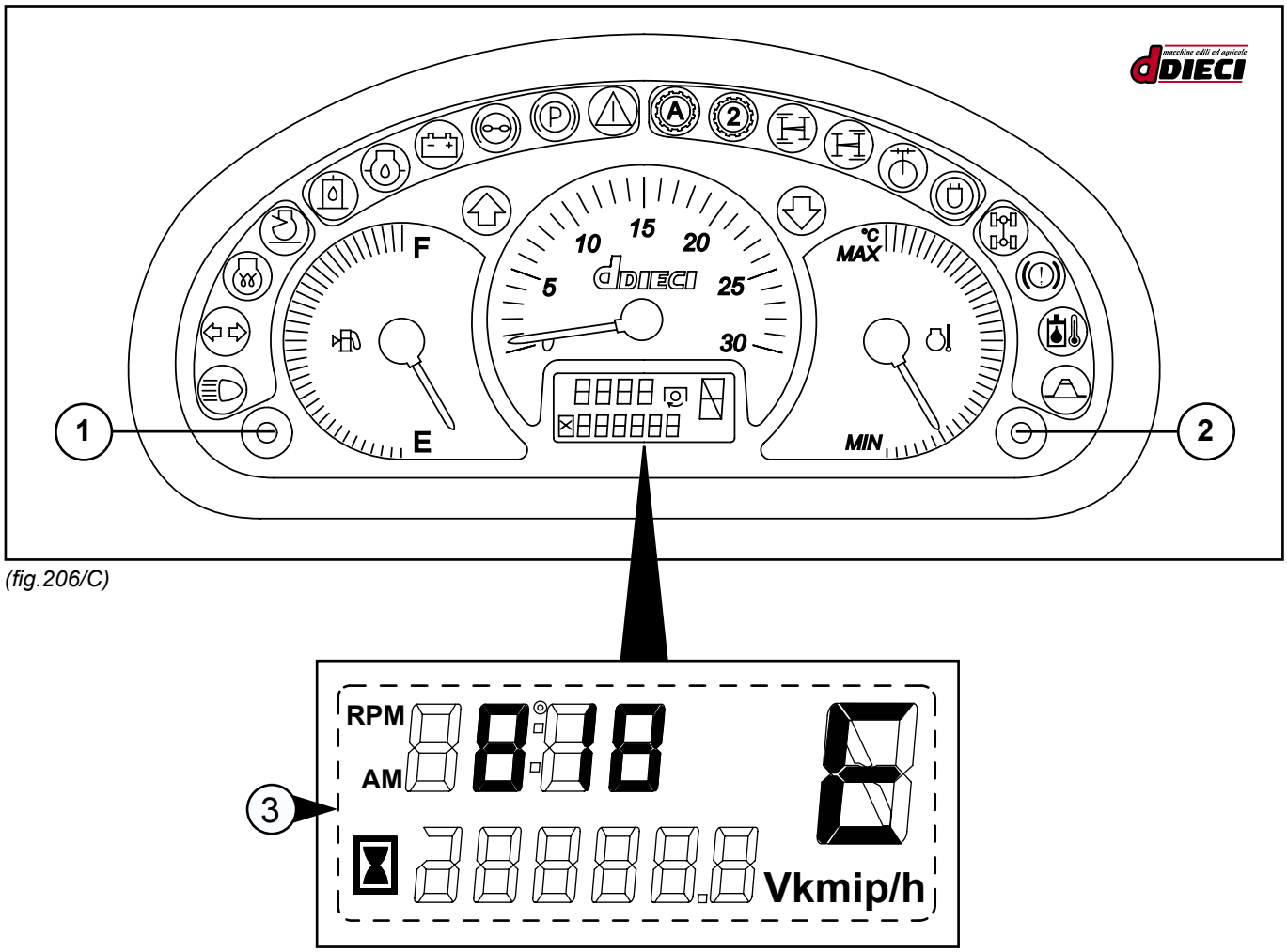

(fig.206/C)

Errors Menu

Press and hold buttons “1” (fig.206/C) and “2” (fig.206/C) simultaneously for 3 seconds to access the Errors menu. Pressing right button “2” quickly (less than 3 seconds) passes to successive error, when the end is reached the wording “ESC” will appear. Keep left button “1” pressed for 3 seconds to exit.
By pressing key “2” again (fig.206/C), starts from the first error again. The panel keeps up to ten errors in its memory.
If one or more errors are present upon vehicle ignition, the panel will switch-on the “general alarm indicator light”, sound the buzzer for 1.5 seconds and show error message on display. If the error disappears it remains inside the memory.

The error messages have priority on the service writing.

- ATTENTION: - Read the SAFETY REGULATIONS (contained in this manual) carefully for the safety of all personnel and your vehicle.

Courtesy of Crane.Market

Below an errors menu scrolling on display example.

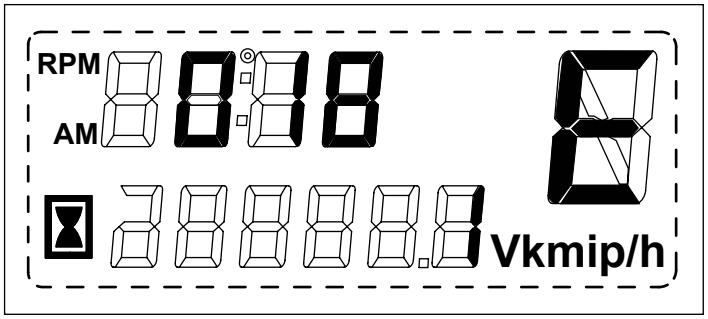

(fig.207/C)

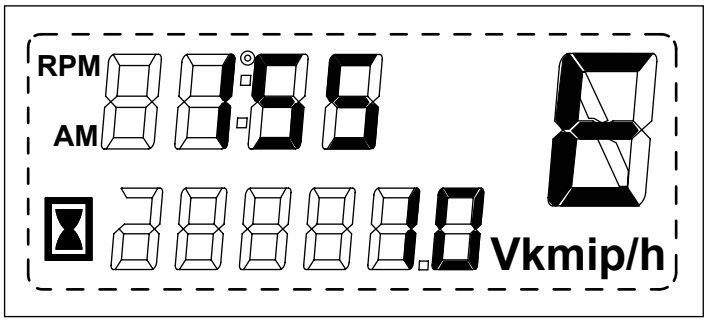

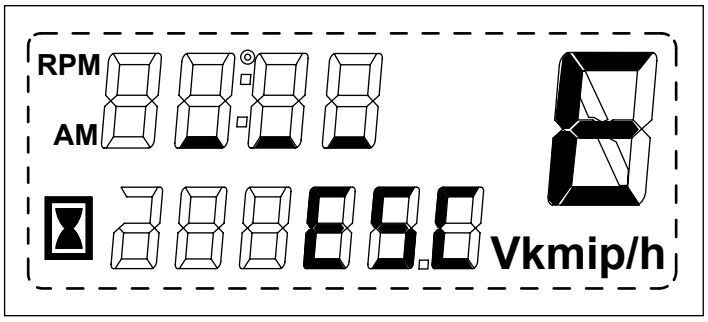

(fig.208/C)

In case of no errors to display, the last will directly be displayed with the writing “ESC”.

https://truckmanualshub.com/

SERVICE

On reaching the SERVICE on the LCD, the letter “S” will be shown (fig.209/C pos.”2”) with the hours corresponding (fig.209/C pos.”1”) to the SERVICE.
Display will only occur on switch-on of the dashboard for a time of 10 seconds with letter “S” flashing.

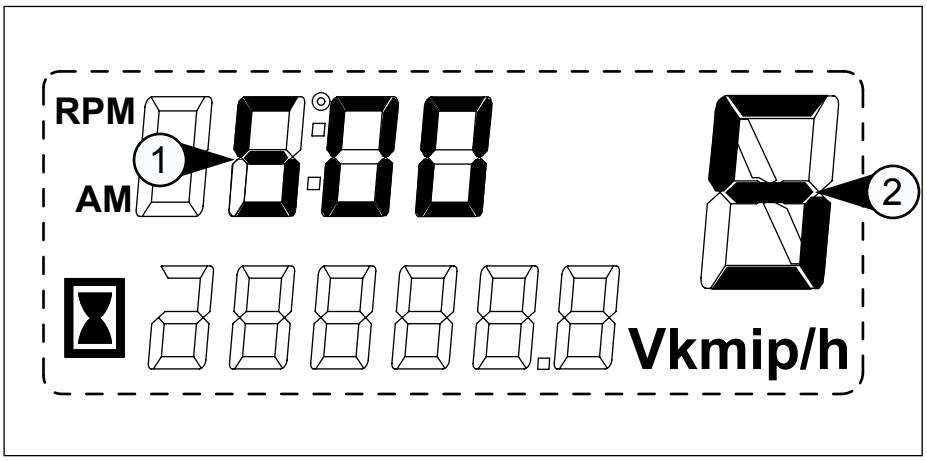

(fig.209/C)

The hour count is managed from the panel.

Every 300 hours the letter “S” (flashing) must always be shown at every switch-on along with the service interval reached (e.g. 300,600,900 ….) as shown in the table.

The service message will deactivate automatically after 20 hours have passed from display of the voucher.

- ATTENTION: - Read the SAFETY REGULATIONS (contained in this manual) carefully for the safety of all personnel and your vehicle.

Courtesy of Crane.Market

ERRORS LIST

Classification	DTC	Lamp Flashing Patterns	Error Item		Referenced page number	
			Area	Status	Overview	Failure Diagnosis
Analog Input Related Failures	P1202/4	7	Rack position sensor	Error (low voltage)	P.15-8	P.15-136
	P1203/3			Error (high voltage)	P.15-10	
	P0122/4	5	Accelerator sensor	Error (low voltage)	P.15-12	P.15-140
	P1203/3			Error (high voltage)	P.15-14	
	P0124/2			Intermittent failure	P.15-16	
	P1125/1			Error (foot pedal-close position)	P.15-18	P.15-144
	P1126/0			Error (foot pedal-open position)	P.15-20	
	P0222/4	1-8	Spare accelerator sensor	Error (low voltage)	P.15-22	P.15-148
	P0223/3			Error (high voltage)	P.15-24	
	P0224/2			Intermittent failure	P.15-26	
	P1225/1			Error (foot pedal-close position)	P.15-28	P.15-144
	P1226/0			Error (foot pedal-open position)	P.15-30	
	P1227/8			Error (pulse communication)	P.15-32	P.15-152
	P0222/4	1-9	Atmospheric pressure sensor	Error (low voltage)	P.15-34	P.15-148
	P0223/3			Error (high voltage)	P.15-36	
	P0224/2			Intermittent failure	P.15-38	
	P0668/4	4-1	ECU Temperature Sensor	Error (low voltage)	P.15-40	P.15-154
	P0669/3			Error (high voltage)	P.15-41	
	P1644/2			Intermittent failure	P.15-42	
	P0634/0	2-5	ECU Temperature Rise Alarm		P.15-43	P.15-154
	P0117/4	4	Cooling water temperature sensor	Error (Low Voltage)	P.15-45	P.15-156
	P0118/3			Error (High Voltage)	P.15-47	
	P0119/2			Intermittent failure	P.15-49	
	P0217/0	3-6	Cooling Water Temperature Rise Alarm		P.15-51	P.15-156
	P0642/4	2-4	SENSOR 5V	Error (low voltage)	P.15-53	P.15-160
	P0643/3			Error (High Voltage)	P.15-54	
	P1644/2			Intermittent failure	P.15-55	
	P0562/1	2-3	Power supply Voltage	Error (Low Voltage)	P.15-56	P.15-56
	P0563/0			Error (High Voltage)	P.15-58	P.15-58

Courtesy of Crane.Market

https://truckmanualshub.com/

ERRORS LIST

Classification	DTC	Lamp Flashing Patterns	Error Item		Referenced page number	
			Area	Status	Overview	Failure Diagnosis
Pulse Sensors	P0340/4	6	Speed Sensor	Error	P.15-60	P.15-164
	P1340/4	1-1	Spare speed sensor	Error	P.15-62	P.15-167
	P0219/0	9	Overspeed Error		P.15-64	P.15-64
Contact Output Related Failures	P1222/4	1-7	Rack actuator Relay	Error A	P.15-66	P.15-170
	P1223/3			Error B	P.15-68	
	P1224/2			Intermittent failure	P.15-70	
	P1232/4	1-5	Start Assist Relay	Error A	P.15-72	P.15-174
	P1233/3			Error B	P.15-74	
	P1234/2			Intermittent failure	P.15-76	
	P1242/4	1-4	CSD solenoid valve	Error A	P.15-78	P.15-178
	P1243/3			Error B	P.15-80	
	P1244/2			Intermittent failure	P.15-82	
	P1402/4	1-3	EGR valve	Error A (Step Motor A-Phase)	P.15-84	P.15-182
	P1403/3			Error B (Step Motor A-Phase)	P.15-86	
	P1412/4			Error A (Step Motor B-Phase)	P.15-88	
	P1413/3			Error B (Step Motor B-Phase)	P.15-90	
	P1422/4			Error A (Step Motor C-Phase)	P.15-92	
	P1423/3			Error B (Step Motor C-Phase)	P.15-94	
	P1432/4			Error A (Step Motor D-Phase)	P.15-96	
	P1433/3			Error B (Step Motor D-Phase)	P.15-98	
Contact Input Related Failures	P1192/4	2-1	Oil pressure switch	Error	P.15-100	P.15-187
	P1198/1	3-1	Oil Pressure Descend Error		P.15-102	
	P1562/4	2-2	Charge switch	Error	P.15-104	
	P1568/1	3-2	Charge Alarm		P.15-106	
	P1217/0	3-3	Abnormal Water Temperature		P.15-108	
	P1101/0	3-4	Air cleaner Clogging Alarm		P.15-110	
	P1151/0	3-5	Oil-water separator Alarm		P.15-112	

- ATTENTION: - Read the SAFETY REGULATIONS (contained in this manual) carefully for the safety of all personnel and your vehicle.

Courtesy of Crane.Market

ERRORS LIST

Classification	DTC	Lamp Flashing Patterns	Error Item			Referenced page number	
			Area		Status	Overview	Failure Diagnosis
Actuator Errors	P1212/4	8	Rack actuator		Error (low current)	P.15-114	P.15-193
	P1213/3				Error (high current)	P.15-116	
	P1211/7				Mechanical failure	P.15-118	
	P1214/2		Engine		Error	P.15-120	
ECU inside and Communication Related Failures	P0605/12	4-1	ECU Internal	Flash ROM	Error (Checksum A)	P.15-122	P.15-197
	P1605/2				Error (Checksum B)		
	P1606/2				Error (Checksum C)		
	P1620/12			Map format	Error		
	P1601/2			EEPROM	Error (Checksum)		
	P0601/12				Error (read/write error)	P.15-123	
	P1610/12			Sub CPU	Error A		
	P1611/12				Error B		
	P1612/12				Error C		
	P0686/4	1-6	Main relay		Error	P.15-124	P.15-199
	U0001/12	1-2	CAN Communication		Error	P.15-126	P.15-203
	U0167/12	4-2	Immobilizer		Error (CAN communication)	P.15-128	P.15-205
	U1167/8				Error (pulse communication)	P.15-130	
	U0426/2				Error (System)	P.15-132	

Courtesy of Crane.Market

https://truckmanualshub.com/

ANTI-TIPPING DEVICE ERRORS

The errors of the anti-tipping device are displayed in place of the clock. The displayed message will be of “Er : nn” type where “Er” means “error” and “nn” indicates the identification number (e.g. “ER:64”).

General panel errors

Alarm code	Description
90	Hour meter message error (10FF80E3)
91	Hour meter message error (10FF80E3)
92	Hour meter message error (10FF80E3)
93	Hour meter message error (10FF80E3)
94	SARL response error, different response value
95	Calibrating pin no longer connected during calibration
96	Errors inside panel
97	Errors inside panel
98	Errors inside panel
99	Errors inside panel

Alarm codes/system errors

Alarm code	Description	What to do
11	CRC error of the memory containing the software	Contact the after-sales technical assistance
12	CRC error of the memory containing the parameters	Contact the after-sales technical assistance
13	Program flow control error	Contact the after-sales technical assistance
14	Data exchange between two micro controls error	Contact the after-sales technical assistance
15	Out of scale power supply voltage error +7Vdc, +18Vdc	Verify battery voltage with machine off and on is within the indicated field.
16	Power supply voltage error of first out of scale channel 4,8 Vdc, 5,2Vdc	Contact the after-sales technical assistance
17	Power supply voltage error of second out of scale channel 4,8 Vdc, 5,2Vdc	Contact the after-sales technical assistance
21	Congruency error of Cut Off 1 output state	Contact the after-sales technical assistance
22	Congruency error of Cut Off 2 output state	Contact the after-sales technical assistance
23	Congruency error of WDO1 output state	Contact the after-sales technical assistance
24	Congruency error of output 1 state	Contact the after-sales technical assistance
25	Congruency error of output 2 state	Contact the after-sales technical assistance
26	Congruency error of WDO2 output state	Contact the after-sales technical assistance
31	Load cell A: CRC error of the internal parameters of the load sensor.	Contact the after-sales technical assistance
32	Load cell A: Out of scale signal reading error (10-990)	Contact the after-sales technical assistance
33	Load cell A: Out of scale internal offset reading error (466-526)	Contact the after-sales technical assistance
34	Load cell A: Internal 5Vdc power supply voltage error	Contact the after-sales technical assistance

- ATTENTION: - Read the SAFETY REGULATIONS (contained in this manual) carefully for the safety of all personnel and your vehicle.

Courtesy of Crane.Market

Alarm code	Description	What to do
35	Load cell A: Thermal calibration not present error	Contact the after-sales technical assistance
36	Load cell A: Check error on LIN bus message	Contact the after-sales technical assistance
37	Load cell A: CRC error of transmitted data	Contact the after-sales technical assistance
38	Load cell A: LIN bus message receipt error	Contact the after-sales technical assistance
39	Load cell A: LIN bus message control hour meter error	Contact the after-sales technical assistance
41	Load cell B: CRC error of the internal parameters of the load sensor	Contact the after-sales technical assistance
42	Load cell B: Out of scale signal reading error (10-990)	Contact the after-sales technical assistance
43	Load cell B: Out of scale internal offset reading error (526-586)	Contact the after-sales technical assistance
44	Load cell B: Internal 5Vdc power supply voltage error	Contact the after-sales technical assistance
45	Load cell B: Thermal calibration not present error	Contact the after-sales technical assistance
46	Load cell B: Check error on LIN bus message	Contact the after-sales technical assistance
47	Load cell B: CRC error of transmitted data	Contact the after-sales technical assistance
48	Load cell B: LIN bus message receipt error	Contact the after-sales technical assistance
49	Load cell B: LIN bus message control hour meter error	Contact the after-sales technical assistance
51	Difference too high between load cell A and B reading	Perform calibration test
52	Difference too high between load percentages detected from channel 1 and 2	Perform calibration test
61	Double safety input congruency error for ground stabilisers reading.	Contact the after-sales technical assistance
62	Double safety input congruency error for closed boom reading.	Contact the after-sales technical assistance
63	Inputs congruency error from mode selector	Contact the after-sales technical assistance
64	Exclusion key input active upon start-up error	Contact the after-sales technical assistance
65	movements re-arm input in active block upon start-up error.	Contact the after-sales technical assistance
66	Feedback in frequency signal reading error	Contact the after-sales technical assistance
67	Feedback signal reading error of external actuator 1	Contact the after-sales technical assistance
68	Feedback signal reading error of external actuator 2	Contact the after-sales technical assistance
71	Analogical signal reading error from out of scale joystick	Contact the after-sales technical assistance
72	Pressure transducer reading error for re-arm verification with joystick	Contact the after-sales technical assistance
73	CAN BUS messages receipt from optional external unit error	Contact the after-sales technical assistance
81	Buttons pressed upon switch-on error	Contact the after-sales technical assistance

Courtesy of Crane.Market

https://truckmanualshub.com/

- ATTENTION: - Read the SAFETY REGULATIONS (contained in this manual) carefully for the safety of all personnel and your vehicle.

Courtesy of Crane.Market

https://truckmanualshub.com/

MAINTENANCE AND REGISTRATION

D

- ATTENTION: - Read the SAFETY REGULATIONS (contained in this manual) carefully for the safety of all personnel and your vehicle.

Courtesy of Crane.Market

https://truckmanualshub.com/

EVERY MODIFICATION MADE TO THE VEHICLE LEADS TO A NEW VERIFICATION OF CONFORMITY WITH THE 2006/42/EC MACHINERY DIRECTIVE THIS PROCEDURE IS ALSO VALID IN THE CASE OF REPAIRS WITH NON-ORIGINAL SPARE PARTS.

ANY PROCEDURES OR MAINTENANCE OPERATIONS NOT DESCRIBED IN THIS MANUAL MUST ONLY BE CARRIED OUT BY AUTHORISED WORKSHOPS AND QUALIFIED PERSONNEL.

THE OPERATOR MAY ONLY CARRY OUT THE FOLLOWING CHECKS: LIQUID LEVEL CHECK, AIR FILTER CLEANING, TYRE PRESSURE CHECK. THESE OPERATIONS MUST BE PERFORMED IN COMPLIANCE WITH SAFETY STANDARDS AS DESCRIBED IN THIS MANUAL.

THE KNURLED PLATES (BULB PLATES) AND THE CAB FLOOR ARE THE ONLY PARTS OF THE VEHICLE THAT CAN BE STEPPED ON: USE A LADDER (CONFORM WITH SPECIFIED STANDARD) FOR MAINTENANCE PARTS THAT CANNOT BE REACHED FROM THE GROUND.

IT IS MANDATORY TO HAVE READ AND LEARNED CHAPTERS “B“ AND “C” (SAFETY STANDARDS/TO KNOW AND USE THE VEHICLE) BEFORE READING CHAPTER “D”.

IT IS PROHIBITED TO MAINTENANCE THE VEHICLE IF THIS MANUAL HAS NOT BEEN READ AND THIS CHAPTER LEARNED.

- ATTENTION: - Read the SAFETY REGULATIONS (contained in this manual) carefully for the safety of all personnel and your vehicle.

Courtesy of Crane.Market

https://truckmanualshub.com/

MAINTENANCE PRESCRIPTIONS

INTRODUCTION

This vehicle has been designed and built to provide maximum performance, savings and facilitate its operation in various working conditions. Before delivery, the vehicle was tested both by the Manufacturer and by the Dealer to ensure its maximum condition. To preserve these conditions and guarantee problem-free operation, it is important to carry out the routine maintenance operations described in this manual at an authorised ***DIECI*** dealer in accordance with the maintenance schedule provided.

Maintenance

This section of the Manual provides all the maintenance prescriptions necessary for maintaining the ***DIECI*** vehicle in perfect working condition.

This chapter also provides information on carrying out the various adjustments necessary to keep the vehicle tuned. The vehicle must receive regular routine maintenance in order to give the best results. It is recommended that all services be carried out as prescribed in the service schedule suggested by ***DIECI***. Remember that it is the owner's and/or users responsibility to keep the vehicle in safe working condition and suitable to be driven on public and private roads.

Maintenance or adjustment operations not described in this chapter or in the rest of the manual must be carried out by qualified personnel respecting the conditions of safety in order to guarantee their safety and the safety of others. Only ***DIECI*** Dealer maintenance staff have been trained to carry out said interventions and only they have the special equipment and tools necessary to guarantee maximum safety, precision and efficiency.

Spaces for registering periodic inspections can be found at the end of this Manual. These allow operators to plan interventions and register them in chronological order. After each inspection, the Dealer must insert the date of intervention, a signature and the Dealer stamp in the space.

Proper vehicle maintenance not only improves the vehicle reliability but it also preserves vehicle value over time.

Owner/ Operator Assistance

Make note of this important data before contacting your service centre, in order to obtain maximised service assistance from your Dealer.

1 - Specify your name, address and telephone number.

2 - Provide the model and chassis serial number of the vehicle.

3 - Indicate the purchase date and working hours.

4 - Explain the type of malfunction.

Only ***DIECI*** Dealers have access to ***DIECI*** client service resources. Moreover, Dealers are able to offer a variety of programmes concerning guarantee, fixed rate maintenance and safety checks including weight tests, in compliance with both legal and insurance requirements.

Protect the environment

It is illegal to pollute sewers, water sources or soil. Use only authorised dumping grounds centres, including the areas designated by the local authorities or workshops equipped with the necessary tools for the disposal of used oils. If in doubt, contact your local authority for relevant instructions.

- ATTENTION -

IT IS MANDATORY TO HAVE READ AND LEARNED CHAPTERS "*B*"-"*C*" (SAFETY STANDARDS/TO KNOW AND USE THE VEHICLE) BEFORE READING CHAPTER "*D*" AND SERVICING THE VEHICLE.

Courtesy of Crane.Market

https://truckmanualshub.com/

macchine edili ed agricole

dDIECI

- ATTENTION: - Read the SAFETY REGULATIONS (contained in this manual) carefully for the safety of all personnel and your vehicle.

Courtesy of Crane.Market

https://truckmanualshub.com/

DECLARATION OF VIBRATORY EMISSIONS

- The declared vibration emission value complies with standard EN 12096

DECLARATION OF FIRST INSPECTION BY MANUFACTURER

DIECI S.r.l. declares that every vehicle produced in its factories undergoes static and dynamic inspections before being placed on the market in order to verify proper operation and compliance with all relative European directives. After inspections are performed, a CE certificate is issued that corresponds to the vehicle inspected and its supplied attachments.

Every CE-marked ***DIECI*** product is supplied with its own certificate, which must be kept by the vehicle's legitimate owner in accordance with the law.

Courtesy of Crane.Market

https://truckmanualshub.com/

IDENTIFYING THE VEHICLE PARTS

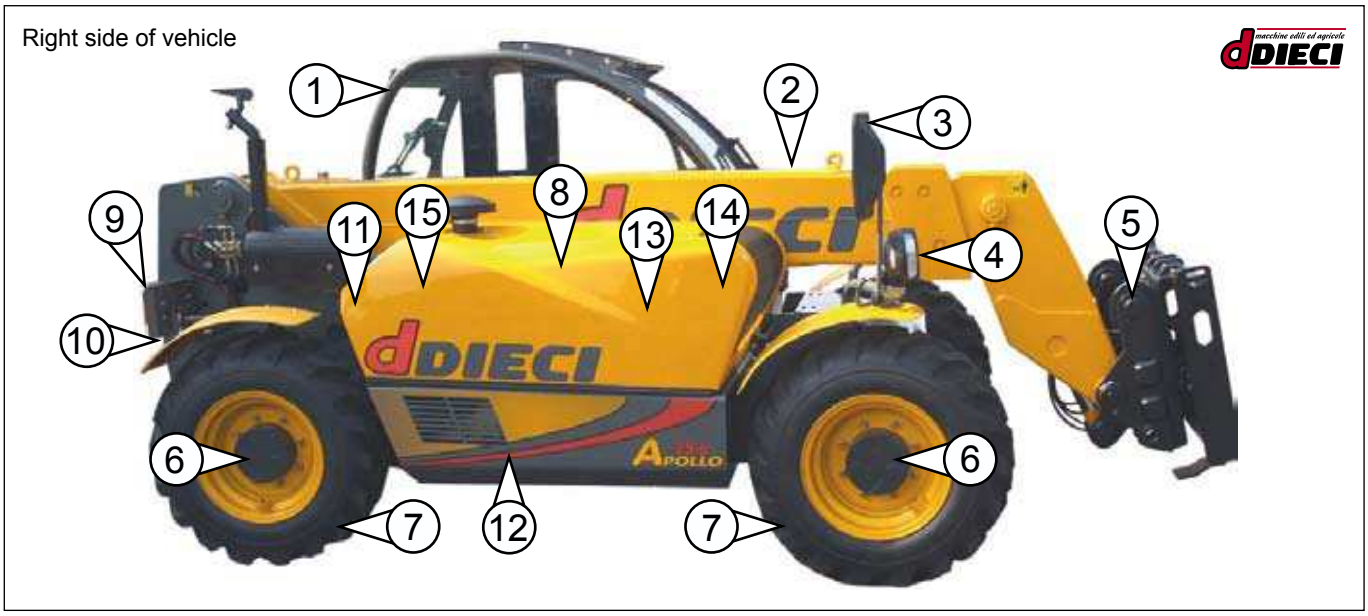

1. Cab
2. Telescopic boom
3. Right rear view mirror
4. Right front light
5. Attachment holding plate
6. Epicycloidal reduction gear
7. Wheel
8. Engine bonnet
9. Right rear light
10. Fuel tank
11. Battery isolator switch
12. Hydrostatic oil filter
13. Engine
14. Water radiator/oil
15. Battery

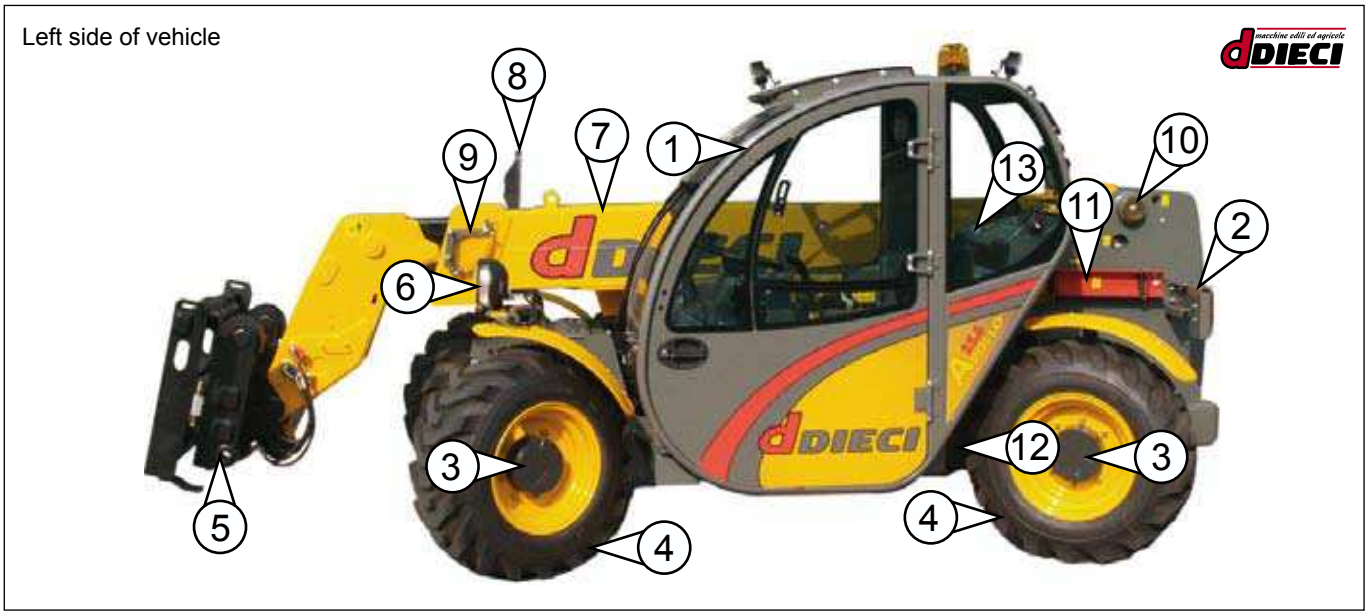

1. Cab
2. Left rear light
3. Epicycloidal reduction gear
4. Wheel
5. Attachment holding plate
6. Left front light
7. Telescopic boom
8. Left rear view mirror
9. Inclinometer
10. Fuel tank
11. Boom support safety rod
12. Cab ventilation air filter
13. Brakes oil tank

- ATTENTION: - Read the SAFETY REGULATIONS (contained in this manual) carefully for the safety of all personnel and your vehicle.

Courtesy of Crane.Market

https://truckmanualshub.com/

IDENTIFYING THE VEHICLE PARTS

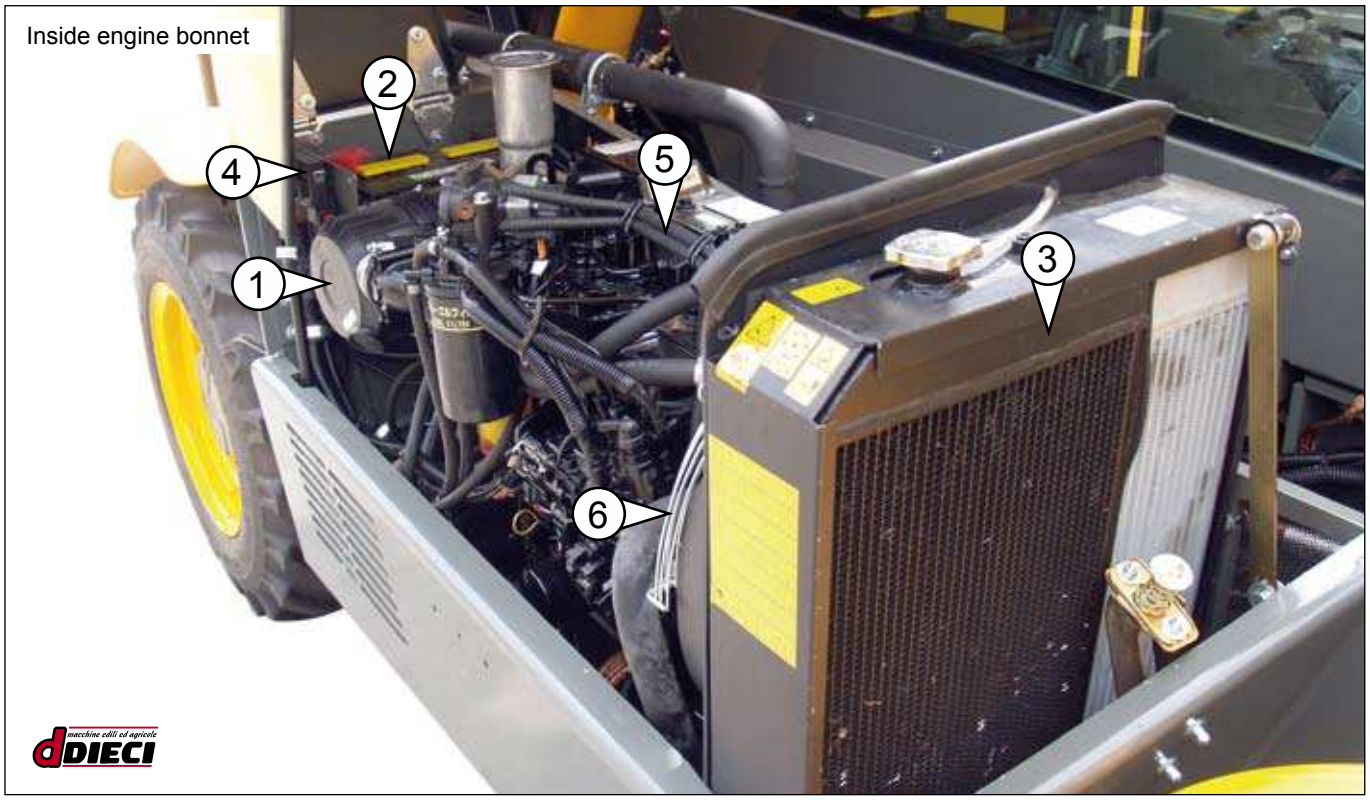

1. Air filter
2. Battery
3. Water/oil radiator
4. Engine control box / Engine fuses
5. Diesel Engine
6. Cooling fan

- ATTENTION: - Read the SAFETY REGULATIONS (contained in this manual) carefully for the safety of all personnel and your vehicle.

Courtesy of Crane.Market

https://truckmanualshub.com/

MAINTENANCE AND REGISTRATION SCHEDULE

Maintenance operations to be carried out are listed on the left; the graphics detail the time period in hours of the part to be serviced.

The asterisk (*) indicates maintenance in the event of the vehicle's use in special conditions.

The table "**Inspections before maintenance**" lists those events that must be anticipated in their first maintenance upon reaching of the hours indicated.

The successive maintenance of the same parts must be carried out according to periodical deadlines listed in the successive tables "**Routine periodical maintenance**".

Maintenance Periodical first maintenance	After 50h	After 100h	After 300h	After 500h	After 1000h Or 2 years	After 1200h Or 2 years
Hydrostatic oil filter replacement						
Replace diesel fuel filter.			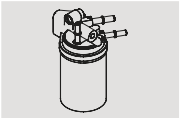			

- ATTENTION: - Read the SAFETY REGULATIONS (contained in this manual) carefully for the safety of all personnel and your vehicle.

Courtesy of Crane.Market

https://truckmanualshub.com/

Periodical Inspections	After 10h	After 50h	After 100h	After 300h	After 500h	After 1000h
Alternator belt check			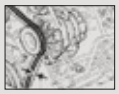			
Decal check						
Electrical system check, anti-tipping device electronic test						
Ensure radiator is not clogged		*	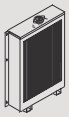			
Check radiator water level.						
Check battery electrolyte level						
Check gear oil level						
Braking system oil level check			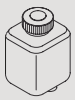			
Check differential sump level			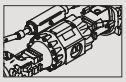			
Check hydraulic oil level	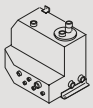					
Check engine oil level.	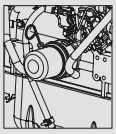					
Check epicycloidal reduction gear oil level			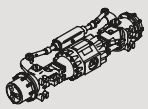			
Check for leaks on hydraulic circuit tubes						
Check presence any leaks						
Check tyre pressure						
Ensure that all nuts and bolts are tight						

- ATTENTION: - Read the SAFETY REGULATIONS (contained in this manual) carefully for the safety of all personnel and your vehicle.

Courtesy of Crane.Market

https://truckmanualshub.com/

Routine periodical maintenance	After 50h	After 100h	After 300h	After 500h	After 1000h Or 2 years	After 1200h Or 2 years
Oscillating axles bushes greasing (if present)	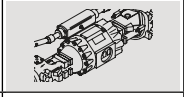					
Lubrication of cross and Cardan transmission shafts	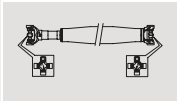					
Lubrication of boom sliders	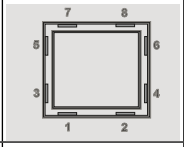					
Lubrication of front and rear articulated pins (PIVOT).	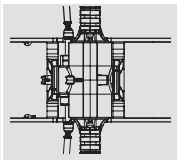					
Lubrication of feet pins and swivelling jack head.	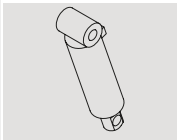					
Lubrication of feet pins and lifting jack head.	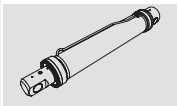					
Boom joint pin lubrication	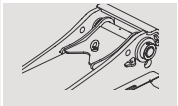					
Lubrication of differential axles	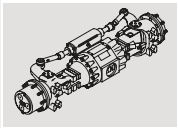					
Replace braking system oil						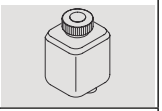
Filters cleaning	*	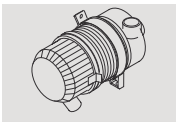				
Diesel tank discharge and cleaning				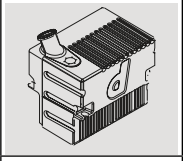		
Tighten wheel nuts			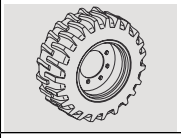			
Tighten boom sliders			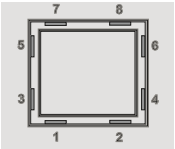			

- ATTENTION: - Read the SAFETY REGULATIONS (contained in this manual) carefully for the safety of all personnel and your vehicle.

Courtesy of Crane.Market

https://truckmanualshub.com/

Routine periodical maintenance	After 50h	After 100h	After 300h	After 500h	After 1000h Or 2 years	After 1200h Or 2 years
Complete replacement air filter				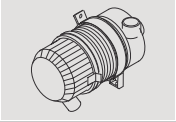		
Hydrostatic oil filter replacement						
Replace hydraulic oil suction filter					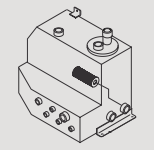	
Replace diesel fuel filter.				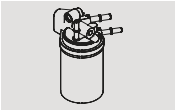		
Replace cab filter						
Replace engine oil filter			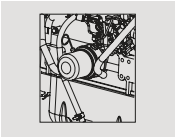			
Replace diesel separator filter.						
Replace speed gear oil					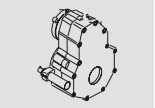	
Replacement axles central differential oil					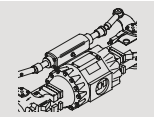	
Replace hydraulic system oil					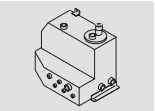	
Replace engine oil			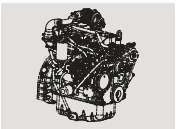			
Replace oil in axles epicycloidal reduction gears					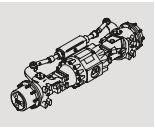	
Replacing cooling liquid						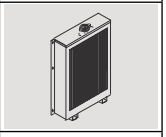
Anti-tipping device load verification						

- ATTENTION: - Read the SAFETY REGULATIONS (contained in this manual) carefully for the safety of all personnel and your vehicle.

Courtesy of Crane.Market

https://truckmanualshub.com/

CAPACITY OF PARTS TO LUBRICATE

UNIT DESCRIPTION	DRY CAPACITY
FRONT AXLE DIFFERENTIAL OIL WITH REDUCTION GEAR (central box)	**4,2 lt**
FRONT AXLE DIFFERENTIAL OIL WITH REDUCTION GEAR (final reductions)	**0,75 lt**
OIL ON FRONT DIFFERENTIAL AXLE (reduction gear)	**0,75 lt**
REAR AXLE DIFFERENTIAL OIL WITH REDUCTION GEAR (central box)	**4,0 lt**
REAR AXLE DIFFERENTIAL OIL WITH REDUCTION GEAR (final reductions)	**0,9 lt**
HYDRAULIC SYSTEM OIL	**92 lt**
OIL FOR BRAKING CIRCUIT	**0,8 lt**
COOLING LIQUID	**12 lt**
FUEL FOR TRACTION	**75 lt**
GREASE	**4 Kg**

COMPARATIVE OIL TABLE

	ENGINE OIL	HYDRAULIC OIL	AXLES AND GEAR BOX OIL WITH SELF-BLOCKING DIFFERENTIAL	BRAKES AND INCHING OIL	PURE RADIATOR	GREASE
AGIP	Sigma Turbo 15w40	Arnica 46	Rotra MP/S 85w90	ATF II D	Antifreeze	Grease MU EP 2
CASTROL	Turbomax SHPDO	Hydraulic Lift 46	Hypoy LS 90	TQ-D	Antifreeze	Spheerol APT 2
CHEVRON	Delo 400 Multigrade 15w40	Rando HD Z 46	Supreme LS gear Lubricant	ATF II D	Antifreeze-Coolant	Dura-Lith EP 2
ERG	TD 401 15w40	Hydro 46 HVI	Gear LSD 75w90	ATF Universal	Fluido per Radiatori concentrato	Grease MP EP 2
Exxon-Mobil	Delvac MX 15w40	Univis N 46	Mobilube 85w90 LS	ATF 220	Antifreeze	Mobilux Ep 2
IP	Tarus Turbo 15w40	Hydrus H.I. 46	Pontiac LS 85w90	Trasmission Fluid DX	Antifreeze	Athesia Grease EP 2
OROIL	Super Truck 15w40 LD	HVLP 46	Fluid Gear LSD 75w90	ATF Universal	Antifreeze	EPX Grease 2
Q8	T 700 SAE 15w40	Handel 46	T 65 LS 75w90	Auto 14	Antifreeze	Rembrandt EP 2
SHELL	Rimula R3 15w40	Tellus T 46	Spirax LS 90		Antifreeze	Retinax EP 2
REPSOL	Diesel Turbo THPD 15w40	HVLP 46	Cartago Autoblocante EP	Matic ATF	Respol Blu Concentrato	Grasa Litica EP 2
ROLOIL	Dolomiti Super HD 15w40	LI 46 HIV		Hydromatic DX	Rol Fluid	Litex EP 2
TEXACO	Ursa Super Premium TDX 15W40	Rando HD Z 46		Dextron II	Antifreeze-Coolant	Multifak EP 2
TOTAL	Rubia Tir 6400	Equivis ZS 46	Trasmission X4	Fluide ATX	Antifreeze	Multis EP 2

- ATTENTION -

FOR CONSUMPTION QUANTITIES OF THE PRODUCTS SEE PARAGRAPH “CAPACITY OF PARTS TO LUBRICATE” IN CHAPTER “**G**”-”VEHICLE TECHNICAL DATA AND TECHNICAL FEATURES”.

- PROHIBITION -

DO NOT USE SYNTHETIC-BASED OIL

***DIECI* DECLINES ALL LIABILITY IF OILS DIFFERENT TO THOSE RECOMMENDED ARE USED.**

- ATTENTION: - Read the SAFETY REGULATIONS (contained in this manual) carefully for the safety of all personnel and your vehicle.

Courtesy of Crane.Market

https://truckmanualshub.com/

ENGINE BONNET OPENING (fig.1/D)

The engine bonnet is equipped with an outer locking handle (fig.1/D Pos.”1”).

To open:

- Insert the key in the lock (fig.1/D Pos.”2”) and turn clockwise/counter-clockwise to engage/disengage the lock.
- Press button/lock (fig.1/D Pos.”2”) to release the bonnet with the lock disengaged.

NOTE:
The bonnet button will not open with the lock engaged.

Push bonnet upwards (fig.2/D) until the gas spring is fully extended to engage block (fig.2/D Pos. “1”).

***- ATTENTION*:**

Before releasing the bonnet ensure the gas spring can support the bonnet fully opened

To close, pull bonnet downwards, accompanying it in its descent.

***- ATTENTION*:**

Accompany the bonnet in its descent paying attention as there is a danger of crushing.

***- ATTENTION*:**

Do not underestimate the weight or overall dimensions of the bonnet.

- PROHIBITION -

IT IS STRICTLY FORBIDDEN to operate the vehicle with the bonnet open.

At the end of the maintenance operations, the bonnet must always be locked.

(fig.1/D)

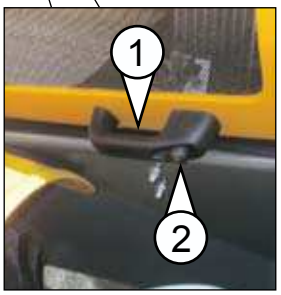

(fig.2/D)

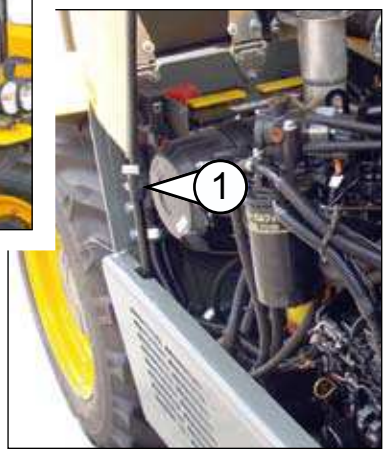

ENGINE

FOR ENGINE, AIR FILTER, AND FUEL FILTER MAINTENANCE ETC. CAREFULLY FOLLOW THE MANUFACTURER’S INSTRUCTIONS PROVIDED IN THE SPECIALLY INCLUDED HANDBOOK.

THE ENGINE USE AND MAINTENANCE HANDBOOK IS AN INTEGRAL PART OF THE DOCUMENTATION SUPPLIED WITH THE VEHICLE.

(fig.3/D)

- ATTENTION: - Read the SAFETY REGULATIONS (contained in this manual) carefully for the safety of all personnel and your vehicle.

Courtesy of Crane.Market

https://truckmanualshub.com/

PEDALS

Accelerator
(fig.4/D Pos.”1”)

The accelerator is a cable type accelerator, and as such it does not require routine maintenance.

Brakes
(fig.4/D Pos.”2”)

Hydraulic brakes do not require registration.

Check the reservoir behind the seat (fig.5/D Pos.”1”) regularly. Oil must always be level; or rather the reservoir must always be full.

For maintenance deadlines, consult the summary Table at the beginning of the chapter.

To top up:

- Unscrew tank cap (fig.5/D Pos.”2”), turning it counter-clockwise.
- Check that oil is level. If it is not, fill the reservoir.
- Screw on the tank cap (fig.5/D Pos.”2”), turning it clockwise. Do not tighten it too much.
- Clean any spillage.

A slight lowering of the level is due to normal consumption of brake pads.

If the brake pedal seems too ‘elastic’, contact your ***DIECI*** dealer to have this fault corrected.

- *ATTENTION*:
Do not press the brake pedal until top-up has been completed. Check that the tank has been closed before acting on the pedal.

- *ATTENTION*:
Periodically check the condition of all brake pipes and tubes. If the level is drastically reduced there is a system leak. Contact your ***DIECI*** Dealer to replace all damaged, corroded or worn tubes.

- *ATTENTION*:
Always use the recommended type of oil, as indicated in the lubrication table. This type of oil can ruin coated surfaces and plastic dashboard parts.

For the safety specifications, refer to chapter “B”, “Carrying out maintenance in safety” paragraph.

Hydrostatic enging “inching” control
(fig.4/D Pos.”3”)

The pedal does not require adjustment because it is directly in contact with the “INCHING” valve that hydraulically controls the movement of the hydrostatic pump.

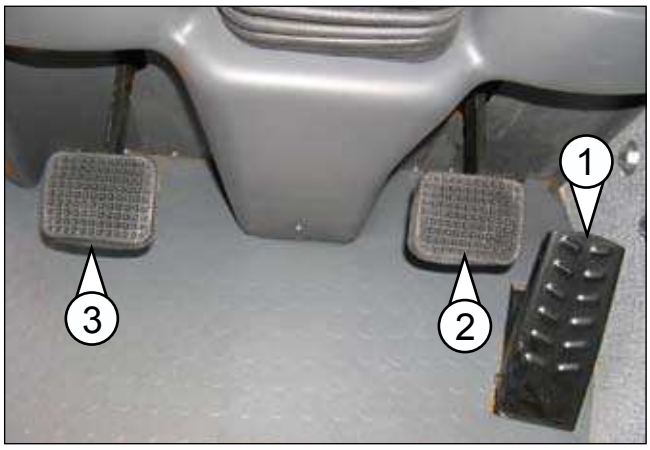

(fig.4/D)

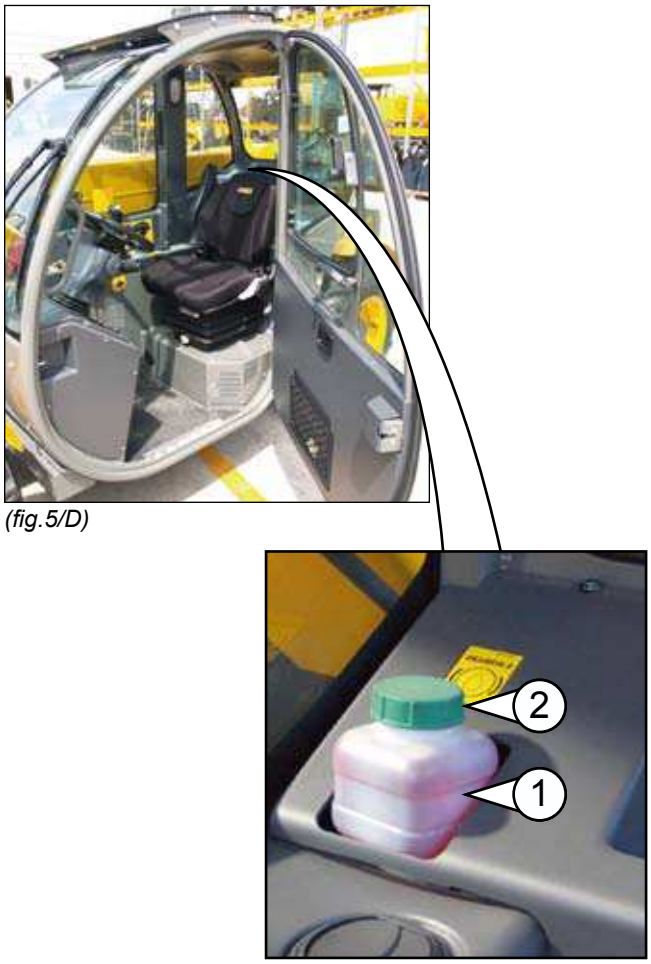

(fig.5/D)

- ATTENTION: - Read the SAFETY REGULATIONS (contained in this manual) carefully for the safety of all personnel and your vehicle.

Courtesy of Crane.Market

https://truckmanualshub.com/

PARKING BRAKE
(Fig.7/D pos.”1”)

The electrically controlled parking brake does not need routine maintenance.

- *ATTENTION*:

In the event the parking brake fails do not use the vehicle.

If the brake is not effective, contact your ***DIECI*** dealer to have this fault corrected.

Unauthorised modifications of the rear axle ratio, the vehicle weight, or wheel and tyre dimensions may compromise proper functioning of the parking brake.

Consult the “Brakes“ (page D/14) paragraph in this manual to top-up the brakes oil.

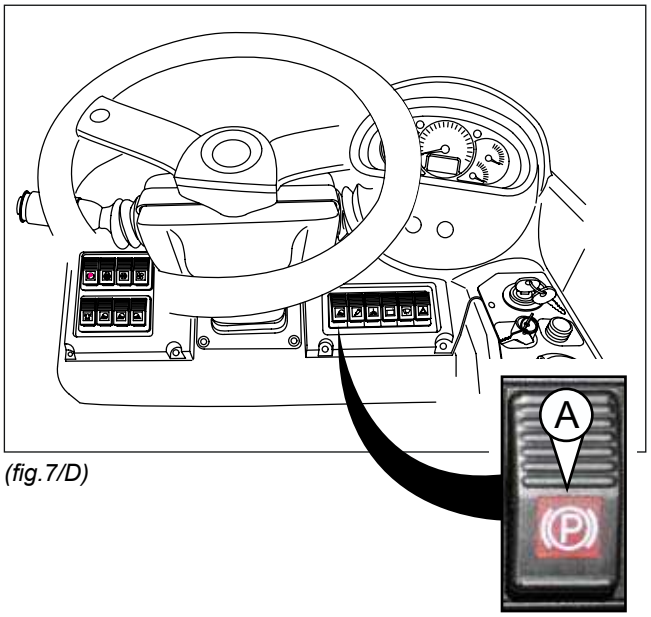

(fig.7/D)

Courtesy of Crane.Market

https://truckmanualshub.com/

HYDRAULIC OIL LEVEL
(fig.8/D Pos.”1”)

The hydraulic oil tank is positioned inside the chassis, under the base of the telescopic arm.
The oil level can be checked via the transparent cap located on the left side of the tank itself (fig. 8/D Pos “1”)

The level is correct when the oil can be seen through the transparent cap (fig.8/D Pos.”1”) with all vehicle cylinders in transport position.

To correctly check the level:

- Park the vehicle on a level surface.
- Fully retract the boom and lower it.
- Position cylinders in transport mode.
- Switch off the engine.
- Check the oil level using the transparent indicator (fig.8/D Pos.”1”).

(fig.8/D)

If the oil is not level, carry out the following operations:

- Bring the vehicle to a halt on flat ground.
- Retract the boom completely and bring it to horizontal position.
- Switch off the engine and remove the ignition key, hang up a sign in the cab that reads “maintenance work under way”.
- Remove the top up cap (fig.9/D Pos.”1”) and pour in the ***DIECI*** recommended oil.
  Top up the quantity necessary to bring it back to level.

Routine maintenance should be carried out at the prescribed intervals.

- *ATTENTION*:

When topping up, do not exceed level and immediately clean any spillage.

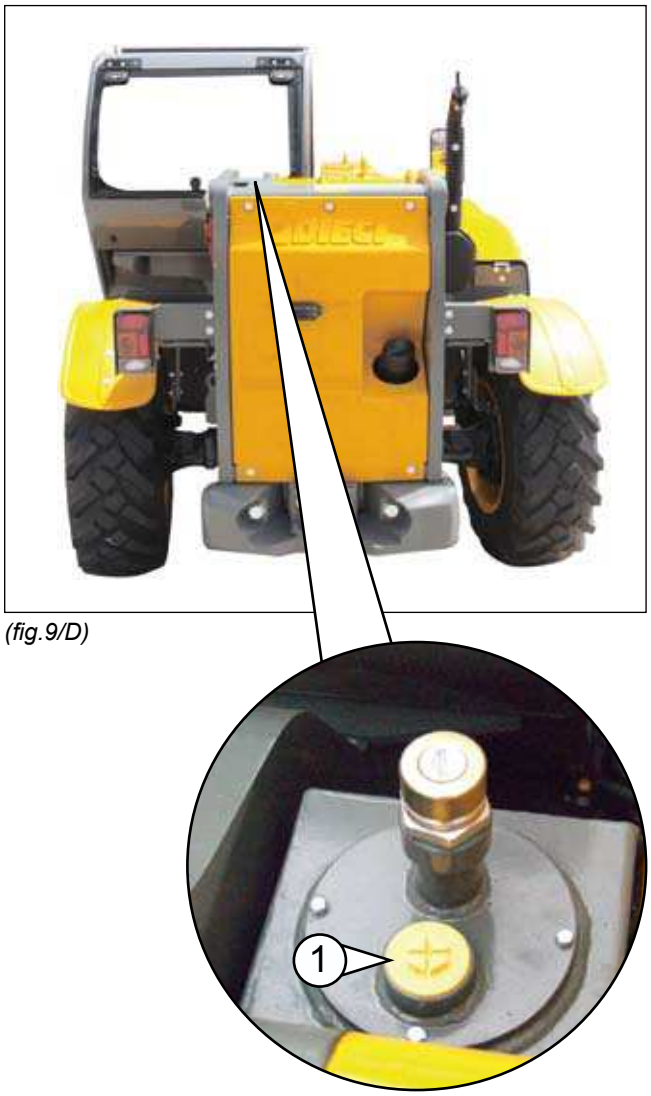

(fig.9/D)

- ATTENTION: - Read the SAFETY REGULATIONS (contained in this manual) carefully for the safety of all personnel and your vehicle.

Courtesy of Crane.Market

https://truckmanualshub.com/

CHANGING HYDRAULIC OIL AND REPLACING FILTERS

Routine maintenance should be carried out at the prescribed intervals.

Inside the tank there is a mesh filter (fig.12/D Pos.”3”). This prevents any hazardous particles from entering the hydraulic system.

The replacement of hydraulic oil and internal tank filters must always be carried out in order. It is not possible to service only one of the two components.

To correctly change oil and filters:

- Bring the vehicle to a halt on flat ground.
- Fully retract the boom and lower it.
- Switch off the engine and remove the ignition key, hang up a sign in the cab that reads “maintenance work under way”.
- Remove the rear plastic (fig.12/D Pos.”5”) by removing its screws.
- Place a suitable capacity container under the drain plug.
- Remove the drain plug (fig.12/D Pos.”1”) to drain the oil. Remove the loading plug (fig.12/D Pos.”2”) to accelerate emptying.
- Once the tank is completely empty, remove the flange (fig.12/D Pos.”4”), unscrewing its bolts to access the inside of the tank.
- Use a fork spanner to remove the filter (fig.12/D Pos.”3”) inside the tank.
- Insert new filter, tightening it with the fork spanner.
- Reposition the flange (fig.12/D Pos.”4”) in its housing, and tighten the bolts.
- Reinsert the drain plug (fig.12/D Pos.”1”).
- Fill up the tank to level via its filler cap (fig.12/D Pos.”2”).
- Once the tank has been filled, tighten the filler cap (fig.12/D Pos.”1”).
- Start up the vehicle and move hydraulic cylinders to discharge any air bubbles.
- Check the hydraulic oil level again and top up if necessary.

- *ATTENTION*:

Waste oil is potentially harmful to the environment and must always be disposed of appropriately.

(fig.11/D)

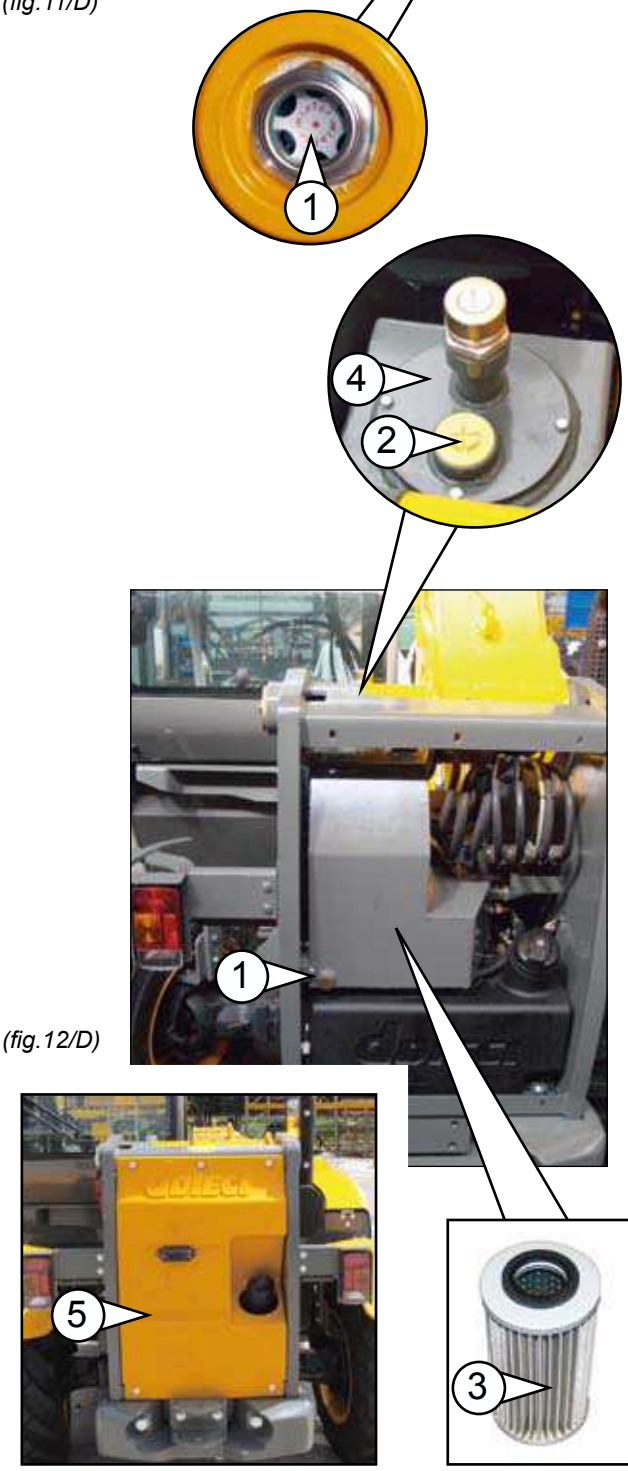

(fig.12/D)

Courtesy of Crane.Market

https://truckmanualshub.com/

HYDROSTATIC OIL FILTER
(fig.13/D pos."1")

Operate as follows to correctly replace:

1. Park the vehicle on a level surface.
2. Fully retract the boom and lower it.
3. Switch off the engine and remove the ignition key, hang up a sign in the cab that reads "maintenance work under way".
4. Place a container under the filter to collect any oil that may come out during replacement.
5. Close the valve of the "supply tube filter" (fig. 14/D Pos. "1").
6. Remove the filter cartridge, unscrewing it using a ribbon spanner (fig.15/D).
7. Clean the filter support with a clean cloth which will not leave felt, making sure the old sealing ring is removed.
8. Take the new ***DIECI***-approved filter. Lubricate with the same oil as used on the oil seal gasket.
9. Screw in the filter using only your hands, taking care to set the lubricated oil gasket in its proper position.
10. **- *ATTENTION***: open the "supply tube filter" valve and block it with a nylon clamp.
11. Switch on the vehicle and make sure there are no leaks.

- *ATTENTION*:

Waste oil is potentially harmful to the environment and must be disposed of properly.

(fig.13/D)

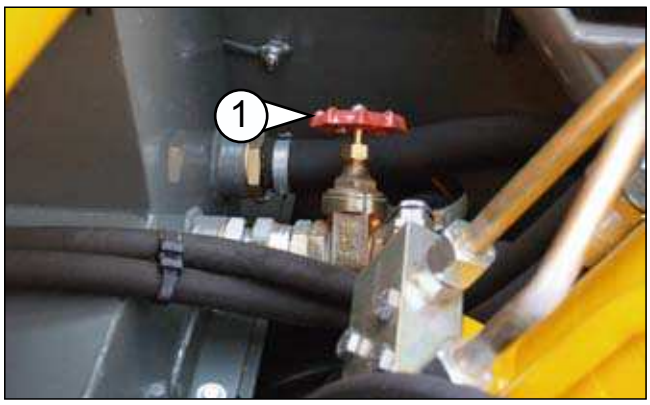

(fig.14/D)

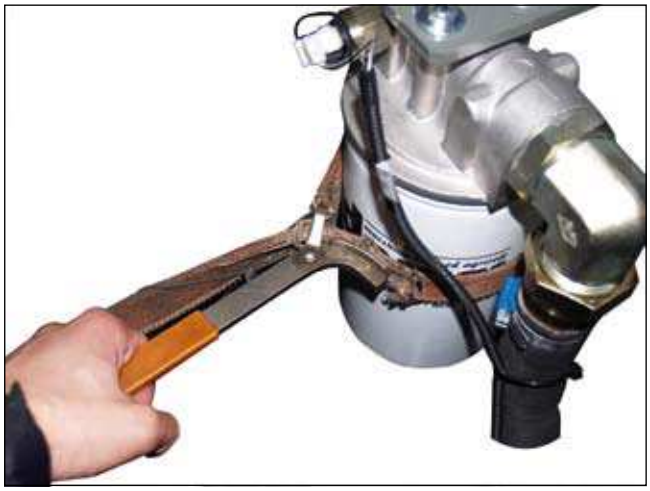

(fig.15/D)

- ATTENTION: - Read the SAFETY REGULATIONS (contained in this manual) carefully for the safety of all personnel and your vehicle.

Courtesy of Crane.Market

https://truckmanualshub.com/

FUEL TANK
(Fig.22/D Pos.”1”)

Cleaning

For correct cleaning:

1. Stop the vehicle on a flat, level surface.
2. Switch off the engine and remove the ignition key, hang up a sign in the cab that reads “maintenance work under way”.
3. Place a container of suitable capacity under the drain plugs (fig.22/D Pos.”3”) to collect fuel that may leak out during cleaning.
4. Unscrew the tank’s filler cap (fig.22/D Pos.”2”).
5. Unscrew the tank’s drain plug (fig.22/D Pos.”3”).
6. Let fuel drain, then top up ten litres of clean fuel through the top up opening to eliminate any residual impurities.
7. Re-insert the drain cap and tighten it securely.
8. Top up the tank with clean fuel and replace cap, insert the cap block with its key.

- ATTENTION -

Fuel is highly inflammable.

Do not smoke and do not approach with a flame during these operations.

Risk of fire or explosion.

- ATTENTION -

Waste fuel is potentially harmful to the environment and must be disposed of appropriately.

(fig.22/D)

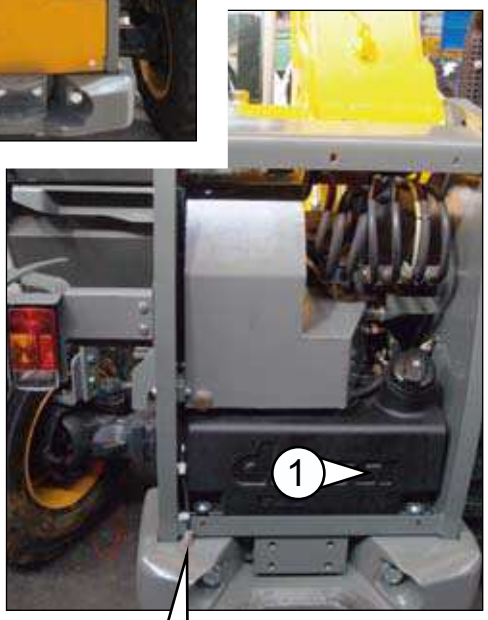

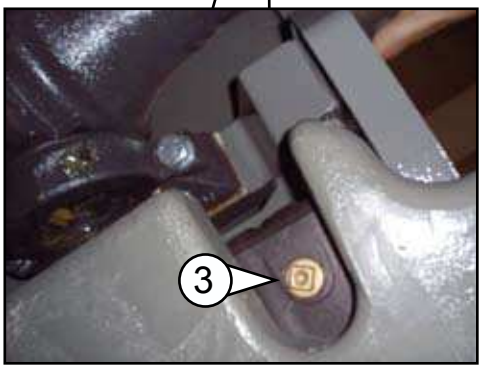

Courtesy of Crane.Market

https://truckmanualshub.com/

RADIATOR WATER / OIL / INTERCOOLER

- ATTENTION -

These operations must be carried out when the engine is cold.

Radiator grill cleaning

Radiator grills (fig.24/D Pos.”1”, fig.25 /D Pos.”1”), engine fan (fig.25/D Pos. “2”) and air recirculation networks (fig.26/D Pos.”A-B-C-D”) must be kept as clean as possible to allow for maximum heat exchange between the radiator and the circulating air. To remove impurities, use a low pressure air jet directing it from the inside towards the outside. Then pass the jet of air on the inner parts covered with dirt. If dirt is particularly compact, soften it with a low pressure water jet before using the air.

- ATTENTION:

Consult the engine operation and maintenance handbook before using jets of air or water.

- ATTENTION:

Heat exchange flaps are very delicate. Do not use rags or brushes to clean them. Jets of water and air must be directed horizontally.

Cooling liquid level check

During normal vehicle use, the water level should be at 3 cm under the radiator cap (fig.24/D Pos.”2”).

Verification of the correct level of cooling liquid must be carried out as follows:

1. Stop the vehicle on a flat surface.
2. Switch off the engine and remove the ignition key, hang up a sign in the cab that reads “maintenance work under way”.
3. Slowly turn the radiator cap (fig.24/D Pos.”2”) counterclockwise until reaching the safety pin.
4. Discharge pressure and steam.
5. Remove the cap.
6. Check the coolant level. If necessary, top up using a mixture of water and antifreeze.
7. To reinsert the cap follow these steps in the opposite order.

- ATTENTION:

If frequent top ups are necessary in normal working conditions, verify that there are no cooling system leaks. Contact a ***DIECI*** after-sales centre if problems arise.

- ATTENTION -

Use demineralised water to fill the cooling system. Calcareous water may cause incrustations and premature system ageing.

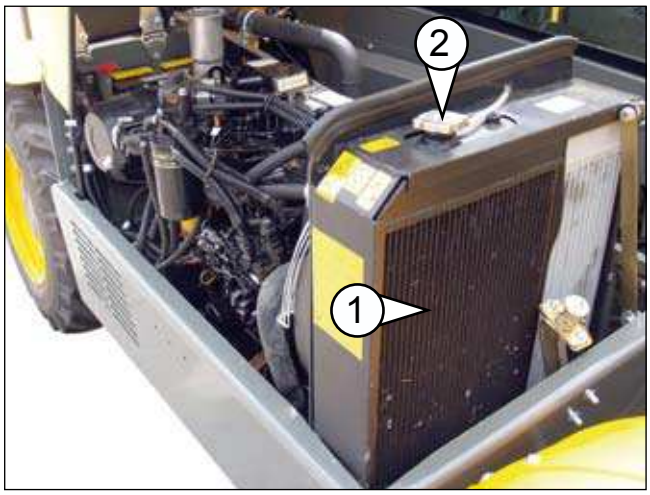

(fig.24/D)

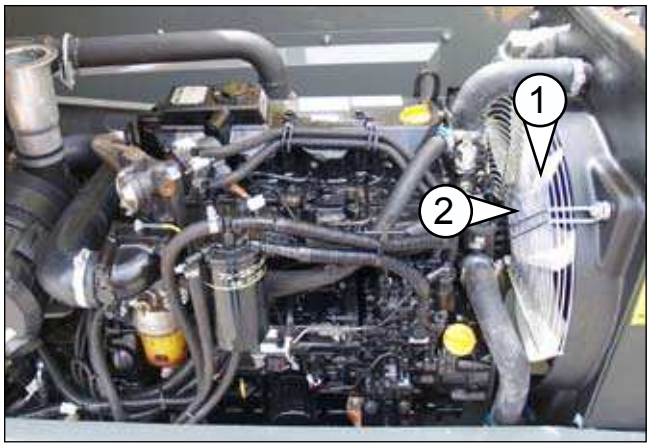

(fig.25/D)

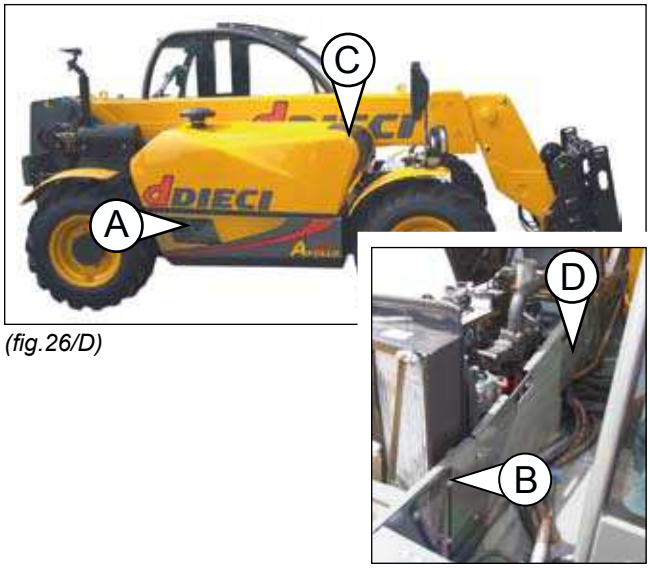

(fig.26/D)

- ATTENTION: - Read the SAFETY REGULATIONS (contained in this manual) carefully for the safety of all personnel and your vehicle.

Courtesy of Crane.Market

https://truckmanualshub.com/

Replacing cooling liquid

For correct replacement of cooling liquid:

1. Stop the vehicle on a flat surface.
2. Switch off the engine and remove the ignition key, hang up a sign in the cab that reads “maintenance work under way”.
3. Place a container under the radiator to collect any cooling liquid which may come out during replacement.
5. Remove the sleeve (fig.28/D, pos.”1”) to drain radiator water; remove the loading cap (fig.27/D Pos.”1”) to speed up the emptying process.
6. Allow the cooling circuit to drain completely.
7. Check the conditions of the sleeves and their fastenings. Replace them if necessary.
8. Rinse the radiator with clean water, pouring it in the top up cap (fig.27/D Pos.”1”), making it drain through the sleeve inlet (fig.28/D Pos.”1”). If necessary, add a detergent product to the clean water.
9. Once cleaning has been completed, close the drain inlet by reinserting the sleeve (fig.28/D Pos.”1”).
10. Fill up the cooling system from the cap (fig.27/D Pos.”1”) up to level (3 cm below the radiator cap) with the previously prepared cooling liquid.
11. Close the cap (fig.27/D Pos.”1”) and switch on the engine and allow it run at minimum for a few minutes.
12. Make sure that there are no leaks, check the level and, if necessary, add more liquid.

- ATTENTION -

Use demineralised water to fill the cooling system. Calcareous water may cause incrustations and premature system ageing.

***- ATTENTION*:**

Always wear suitable protective clothing during these operations.

***- ATTENTION*:**

Waste coolant is potentially harmful to the environment and must be disposed of appropriately.

- ATTENTION -

The radiator must always be filled with a distilled water and anti-freeze solution in order to prevent corrosions and freezing of the water in the system.

The mixture percentages can be found on the anti-freeze boxes.

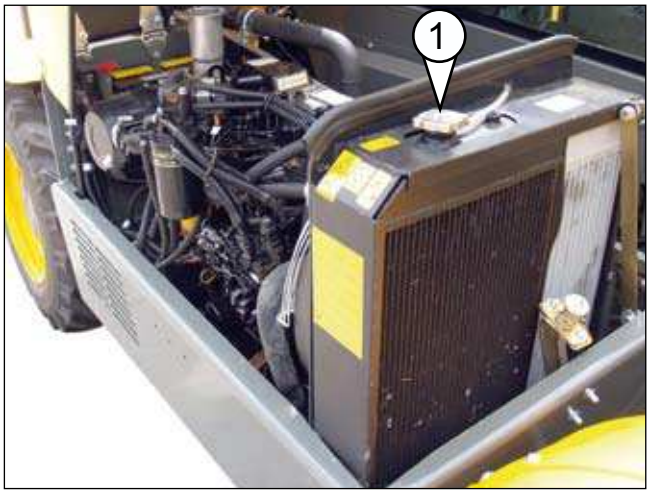

(fig.27/D)

(fig.28/D)

Courtesy of Crane.Market

https://truckmanualshub.com/

AIR FILTER
(fig.29/D Pos.”1”)

Cartridge Cleaning / Replacement

An air filter in poor conditions can cause a reduction in power, excessive fuel consumption and shorten engine life.

Filter clogging is signalled by an indicator light found on the left dashboard (fig.30/D Pos.”1”); **once the indicator light switches on the vehicle can be used for a maximum of 10 hours**.

Maintenance must however be carried out as often as described.

Filter cleaning should be carried out with compressed air at maximum of 3 Bar and at a distance not less than 150mm, taking due caution to not damage components.
Use a wet cloth which will not leave residue to clean the box and cover.

***- ATTENTION*:**

Do not operate with an improperly assembled or damaged filter.

***- ATTENTION*:**

For the complete efficiency of the filter, it is advised to operate with the filter complete with all parts and components. All worn parts should be replaced as quickly as possible.

- ATTENTION -

Operating the vehicle without the engine air filter IS STRICTLY PROHIBITED.

The engine suctions in air continuously during use. Dust that enters into circulation can cause serious system damage.

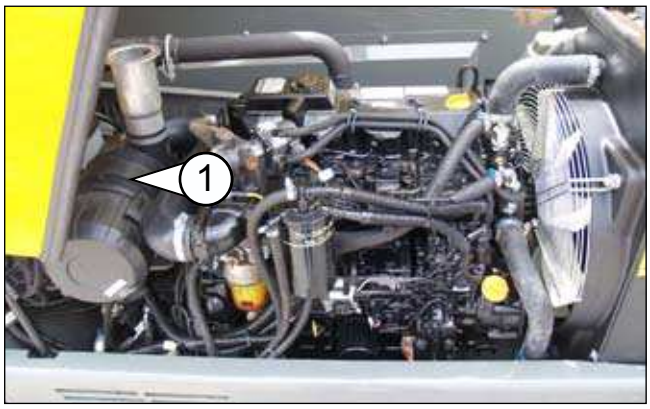

(fig.29/D)

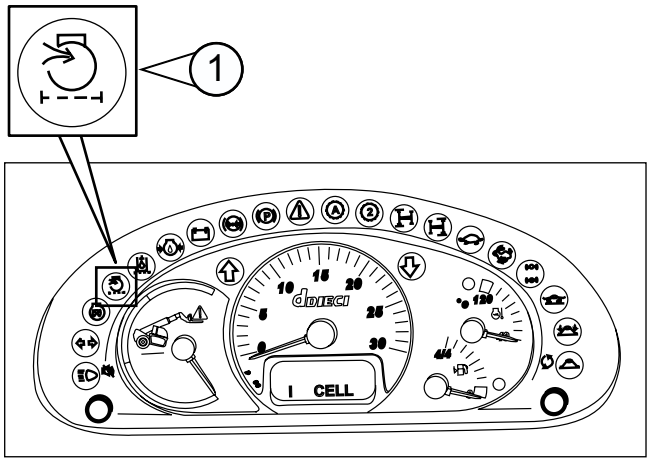

(fig.30/D)

- ATTENTION: - Read the SAFETY REGULATIONS (contained in this manual) carefully for the safety of all personnel and your vehicle.

Courtesy of Crane.Market

https://truckmanualshub.com/

For correct cleaning:

1. Stop the vehicle on a flat, level surface.
2. Switch off the engine and remove the ignition key, hang up a sign in the cab that reads “maintenance work under way”.
3. Open the bonnet.
4. Push the two block hooks towards the cab (fig.31/D Pos.”1”) to free the filter cover.
5. Remove the cover (fig.31/D Pos.”2”).
6. Remove the external filter (fig.31/D Pos.”3”) making it oscillate and pulling towards you.
7. Remove the internal filter (fig.32/D Pos.”1”) making it oscillate and pulling towards you.
8. Clean or replace the filters, clean the box and the cover.
9. Assemble all following the same operations in reverse order. Assemble the covers with the expulsion valve always facing downwards (fig.33/D Pos.”1”), incorrect assembly inhibits its regular functioning.

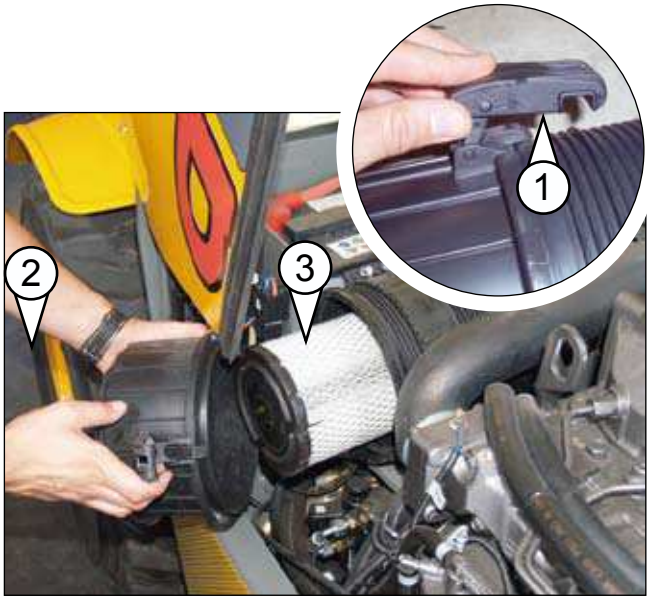

(fig.31/D)

- *ATTENTION*:

Filtration components which come into contact with any type of liquid will have to be replaced.

Regularly check the suction sleeves and replace them immediately if worn or damaged.
Regularly check that bolts and clamps are properly tightened.
No air should be allowed to enter the engine without having first passed through the filter.

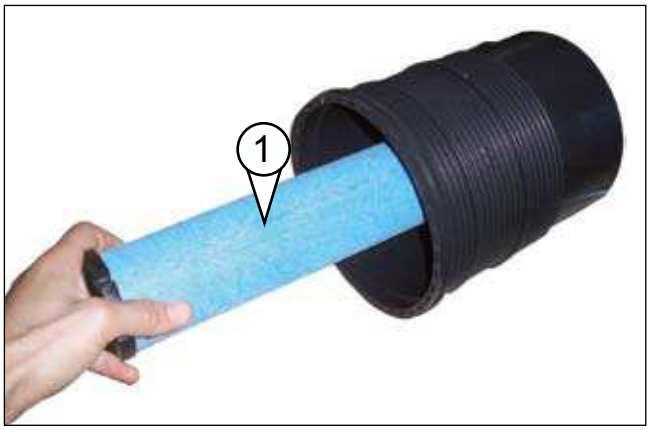

(fig.32/D)

- *ATTENTION*:

During filter routine maintenance, check integrity and presence of expulsion valve (fig.33/D Pos.”1”). If worn or missing, replace it immediately. Do not work without valve.

- *ATTENTION*:

In the event that connecting gaskets between the suction duct and filter should become worn, replace them.

(fig.33/D)

Courtesy of Crane.Market

https://truckmanualshub.com/

CAB VENTILATION FILTER REPLACEMENT
(fig.40/D)

The cab filter should be replaced every 300 working hours.

Below you can find the sequence for proper replacement operations:

1. Park the vehicle on a level surface.
2. Completely retract and lower the boom.
3. Switch off the engine and remove the ignition key, hang up a sign saying “maintenance work under way”.
4. Remove the guard, in the rear of the cab (fig.40/D Pos.”1”), by unscrewing the fastening screws.
5. Remove the worn filter and insert the new one (fig.40/D Pos.”2”).
6. Reassemble the guard
7. Restart the engine with the cab ventilation moving to verify that the operation is correct.

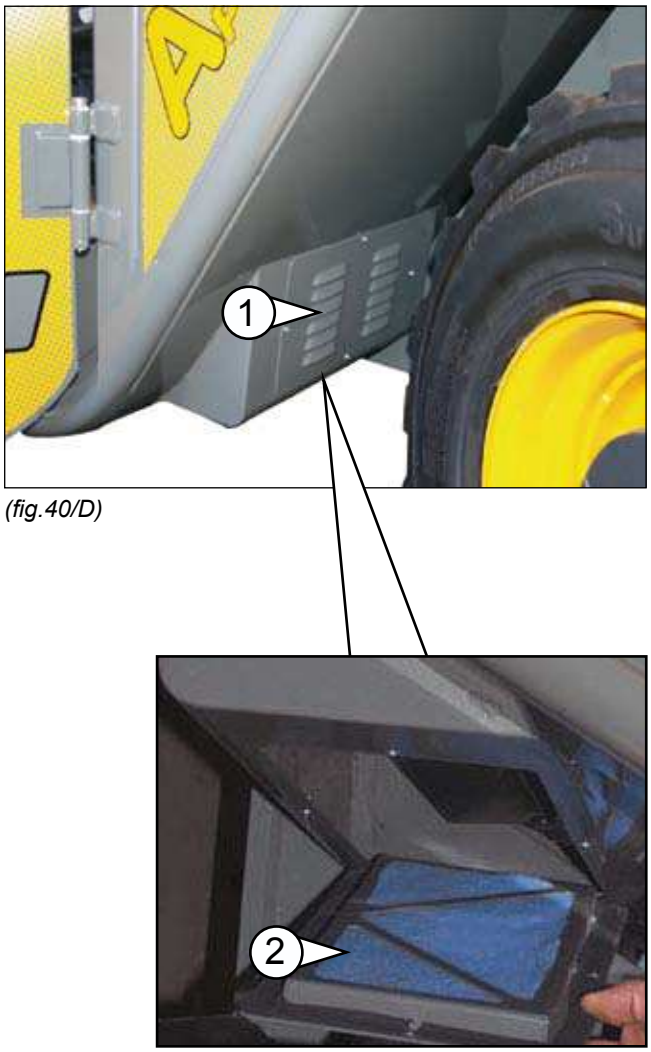

(fig.40/D)

- *ATTENTION*:

Do not clean the clogged filter with air or water and re-use.
At the end of its life, the filter loses determined features which cannot be restored.

- *ATTENTION*:

In the event of vehicle use in particularly dust rich environments (haylofts, etc.); the filter life is reduced by 100 hours.

- *ATTENTION*:

If the ventilation system malfunctions, check for filter clogging.

In the event that malfunctions persist even after filter replacement, contact a ***DIECI*** service centre.

- *ATTENTION*:

Do not use the vehicle without a cab filter.
Dust that enters the cab can cause health risks for the operator and ventilation system malfunction.

- ATTENTION: - Read the SAFETY REGULATIONS (contained in this manual) carefully for the safety of all personnel and your vehicle.

Courtesy of Crane.Market

https://truckmanualshub.com/

AIR CONDITIONING (OPTIONAL)

Cleaning the system

1 Remove the protective carter (fig.41/D Pos"1").

2. Clean the condenser (fig.41/D Pos"2"), directing the compressed air, at a maximum pressure of 7 bar, through the radiant mass, from the side opposite the normal air flow (fig.41/D).

3. Be careful not to damage radiator flaps.

4. After cleaning, assemble protective guard.

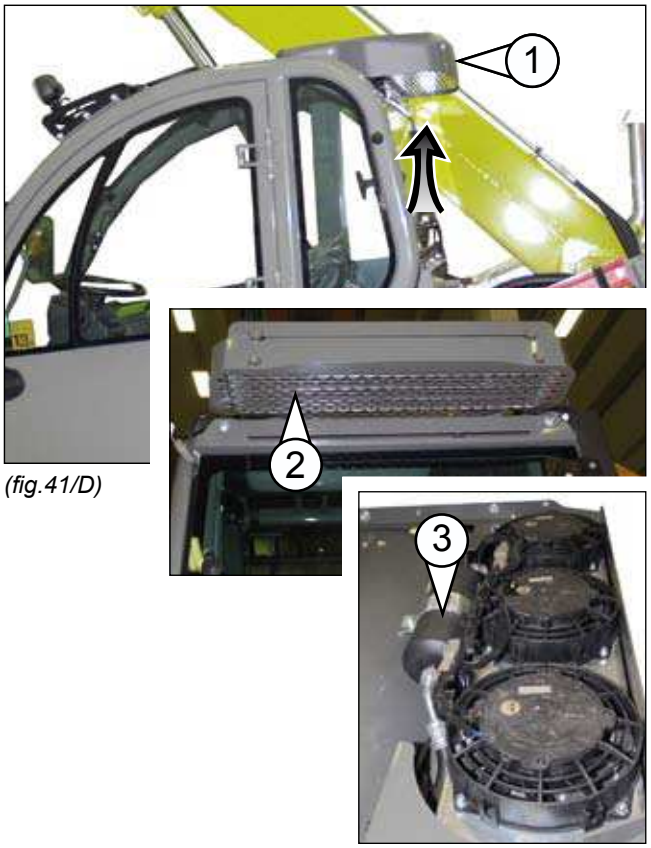

(fig.41/D)

- *ATTENTION*:

Should the conditioning system not work properly, immediately inspect the condenser.

- *ATTENTION*:

Yearly check gas charge through relative valves (fig.41/D Pos"1"), this must be done by qualified personnel.

- *ATTENTION*:

Replace the radiator filter (fig.41/D Pos"3") **every 2 years**. Its breakage could cause serious damage to the conditioning system and cause the introduction of particles into the air that are harmful to the operator's health.

- *ATTENTION*:

Turn on the air conditioning for two minutes every 15 days, even during the winter. In this way, the moveable parts like the compressor and the system in general can be lubricated.

- *ATTENTION*:

DO NOT loosen any air conditioning system tubes. Contact between the skin and coolant can cause freezing.

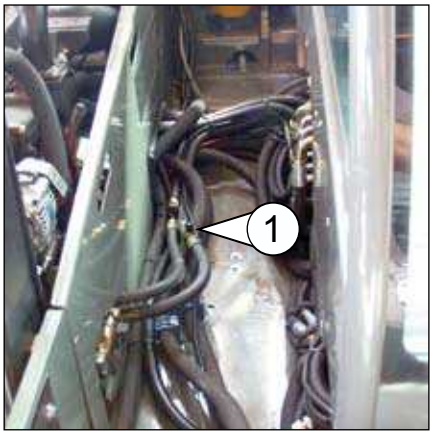

(fig.41/D)

Compressor belt tension

Check compressor belt tension (fig.42 Pos."1") every 500 hours.

- *ATTENTION*:

The belt must be checked with the engine switched off. Before beginning the check, switch off the engine and remove the ignition key, hang up a sign, "maintenance work under way", altering others to stay clear of the area.

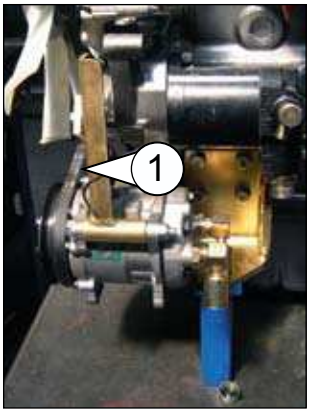

(fig.42/D)

Courtesy of Crane.Market

https://truckmanualshub.com/

CYLINDER BLOCK VALVES

Cylinder block valves hinder uncontrolled movement of the cylinder pistons in case of lacking hydraulic or bursting pressure of a flexible pipe.
The valves are directly mounted on the cylinders.

Verifying proper operation of cylinder non return valves

- *ATTENTION*:

Do not allow anybody near the vehicle while these checks are being carried out.

- *ATTENTION*:

One movement at a time should be checked during verifications.

- *ATTENTION*:

In the event of malfunction, do not use the vehicle until it has been repaired.

A) Boom raising cylinders: (fig.44/D)

1. Start up the engine. Make sure that the parking brake is engaged and the transmission in neutral.
2. Lift the boom to a 45° angle.
3. When the engine is running at 1400 RPMs, engage the control lever to lower the boom. During boom movement stop the engine. The boom must slow down and stop as the engine slows down and stops.

If the boom continues to move even after the motor stops, the boom raising cylinders are faulty. Repair the defect as quickly as possible, contact a ***DIECI*** service centre.

(fig.44/D) (Boom raising cylinder block valve)

- ATTENTION: - Read the SAFETY REGULATIONS (contained in this manual) carefully for the safety of all personnel and your vehicle.

Courtesy of Crane.Market

https://truckmanualshub.com/

B) Boom extension cylinder: (fig.46/D)

1. Start up the engine. Make sure that the parking brake is engaged and the transmission in neutral.
2. Raise the boom and extend it completely.
3. When the engine is running at 1400 RPMs, engage the control lever to retract the boom. During boom movement stop the engine. The boom must slow down and stop as the engine slows down and stops.

If the boom continues to move even after the engine is switched off, the block valve is faulty. Repair the defect as quickly as possible, contact a ***DIECI*** service centre.

(fig.46/D) (Boom internal extension cylinder block valve)

C) Fork swivel cylinder: (fig.47/D)

1. Start up the engine; pick up a load using the forks (example a load bricks or some hay bales).
   Tilt the forks completely backwards.
2. Engage the parking brake and put the transmission in neutral.
3. Lift the boom off the ground just enough necessary to allow the forward inclination of the forks.
4. When the engine is running at 1400 RPMs, engage the control lever to tilt the forks forward. During the fork movement stop the engine. Movement of the swivel must slow down and then stop as the engine slows down and stops.

If the forks continue to lower or move after the engine is switched off, the block valve is faulty.
Repair the defect as quickly as possible, contact a ***DIECI*** service centre.

(fig.47/D) (External swivel plate cylinder block valve)

Courtesy of Crane.Market

https://truckmanualshub.com/

REDUCERS AND DIFFERENTIAL AXLES

Figures illustrated are only an indication and may not correspond to those parts mounted on your vehicle.
References made to the maintenance inlets, refer to pages, (fig.56/D-(fig.57/D), where two standard axles have been described for more accurate identification.

Reducer

Oil change (fig.53/D)

1. Stop the vehicle on a flat, level surface with differential oil still hot.
2. Switch off the engine and remove the ignition key, hang up a sign in the cab that reads “maintenance work under way”.
3. Place a container under the drain plugs to collect any oil which may come out during replacement.
4. Remove the drain plug (fig.53/D Pos.”G1”) and the loading/level plug (fig.53/D Pos.”F1”) to carry out a complete drainage.
5. Allow the oil to completely drain out.
6. Replace the drain plugs and tighten them securely.
7. Pour an approved type of clean oil into the loading/level plug (fig.53/D Pos.”F1”).
8. The level is correct when oil comes out of the loading/level plug (fig.53/D Pos.”F1”).
9. Check for any leaks coming from the drain plugs.
10. Replace the load/level cap and tighten it securely.

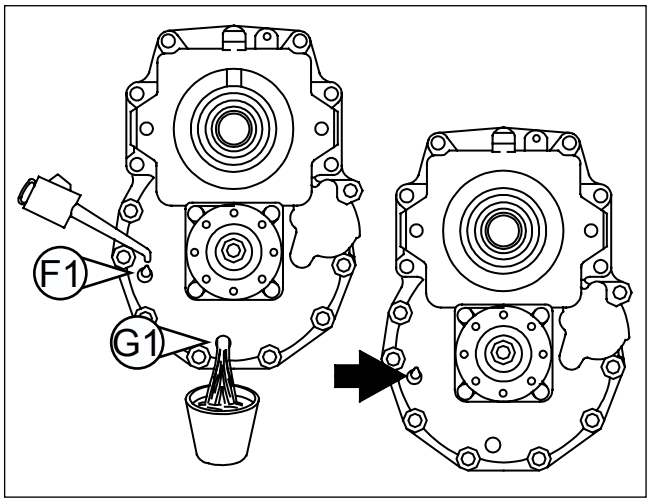

(fig.53/D)

Front/Rear Differential Axles

Oil change (fig.54/D)

1. Stop the vehicle on a flat, level surface with differential oil still hot.
2. Switch off the engine and remove the ignition key, hang up a sign in the cab that reads “maintenance work under way”.
3. Place a container under the drain plugs to collect any oil which may come out during replacement.
4. Remove the drain plug (fig.54/D Pos.”G2”) and the loading/level plug (fig.54/D Pos.”F2”) to carry out a complete drainage.
5. Allow the oil to completely drain out.
6. Replace the drain plugs and tighten them securely.
7. Pour an approved type of clean oil into the loading/level plug (fig.54/D Pos.”F2”).
8. The level is correct when oil comes out of the loading/level plug (fig.54/D Pos.”F2”).
9. Check for any leaks coming from the drain plugs.
10. Replace the load/level cap and tighten it securely.

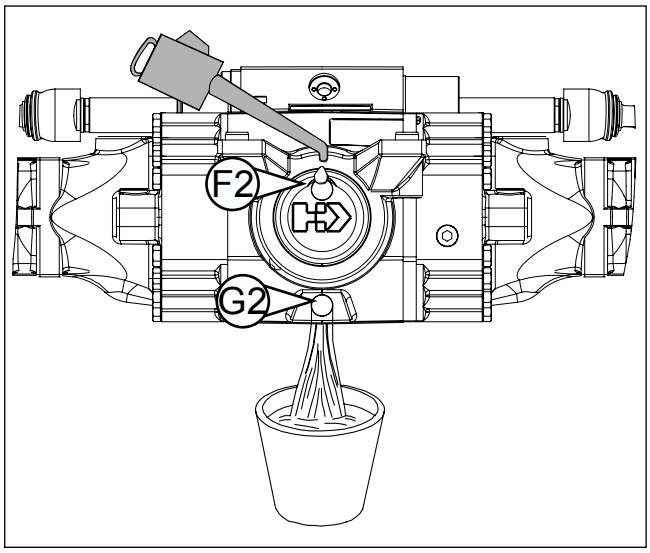

(fig.54/D)

- ATTENTION: - Read the SAFETY REGULATIONS (contained in this manual) carefully for the safety of all personnel and your vehicle.

Courtesy of Crane.Market

https://truckmanualshub.com/

Epicycloidal reduction gear

Oil change
(fig.53/D - fig.54/D - fig.55/D)

1. Stop the vehicle on a flat, level surface with differential oil still hot.
2. Switch off the engine and remove the ignition key, hang up a sign in the cab that reads “maintenance work under way”.
3. Place a container under the drain plugs to collect any oil which may come out during replacement.
3. Turn the wheel hub (fig.53/D Pos.”1”) so that the inlet (fig.54/D Pos.”M”) is moved to the lower position (fig.54/D), and then remove the oil cap.
4. Allow the oil to completely drain out.
5. Turn the wheel hub so that the inlet (fig.55/D Pos.”M”) is moved to the middle position (fig.55/D).
6. Fill the reduction gear to level via the inlet (fig.55/D). The level is correct when oil comes out from the oil cap.
7. Replace the epicycloidal reduction gear cap and tighten it securely.
8. Repeat all the operations for each of the four reducer units.

(fig.53/D)

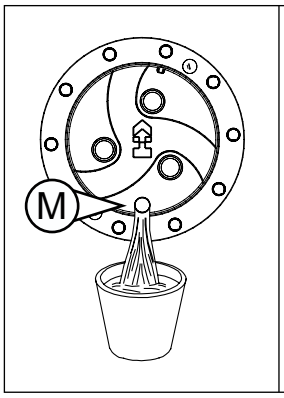

(fig.54/D)

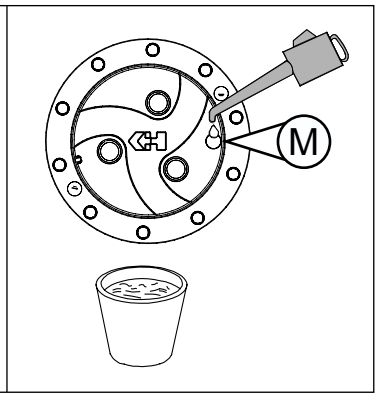

(fig.55/D)

Courtesy of Crane.Market

https://truckmanualshub.com/

FRONT DIFFERENTIAL AXLE

Key	
F	Drain plug and oil level
G	Oil drain cap
H	Vent cap
I	Greasing nipple
M	Oil cap

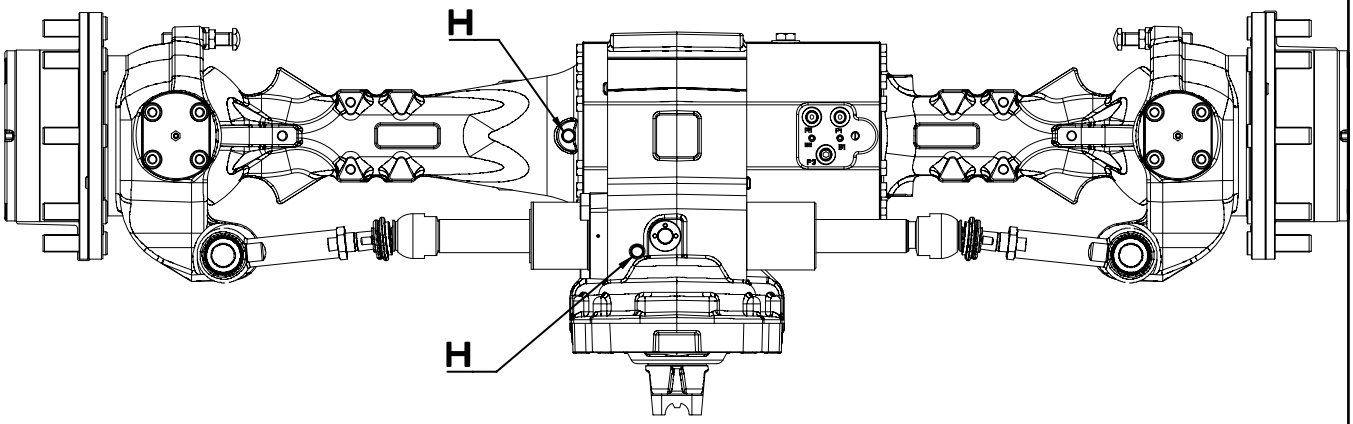

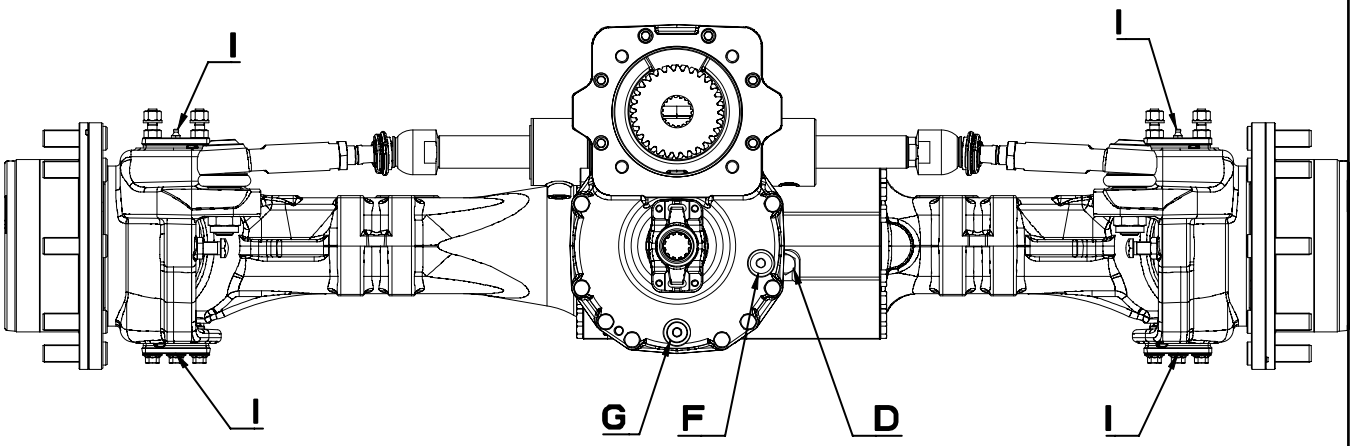

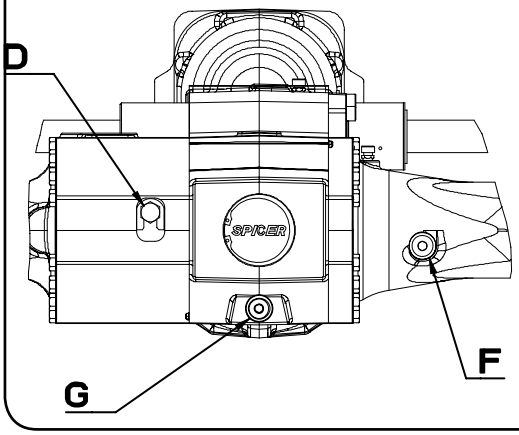

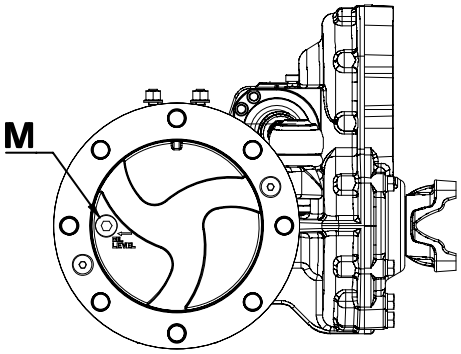

(fig.56/D)

- ATTENTION: - Read the SAFETY REGULATIONS (contained in this manual) carefully for the safety of all personnel and your vehicle.

Courtesy of Crane.Market

https://truckmanualshub.com/

dDIECI macchine edili ed agricole

REAR DIFFERENTIAL AXLE

Key	
F	Drain plug and oil level
G	Oil drain cap
H	Vent cap
I	Greasing nipple
M	Oil cap

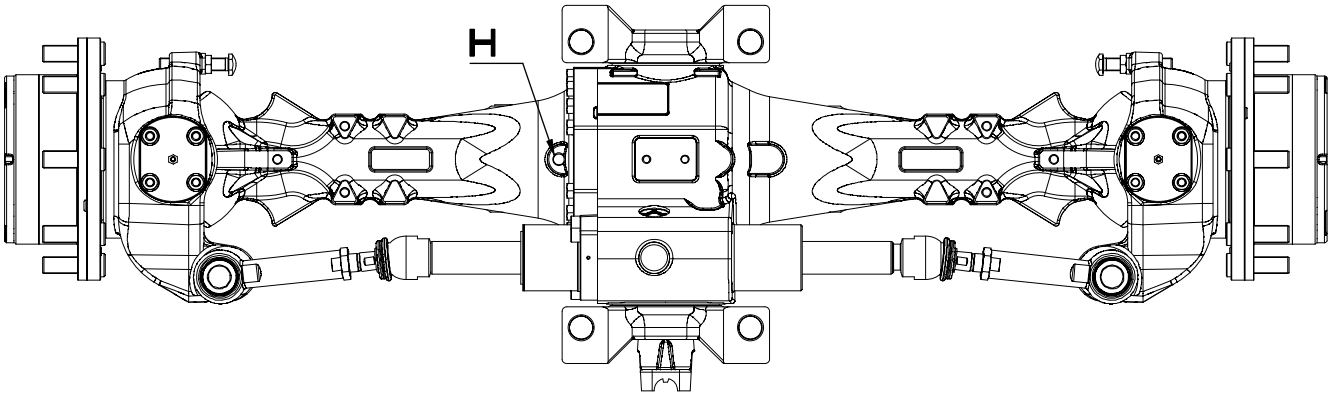

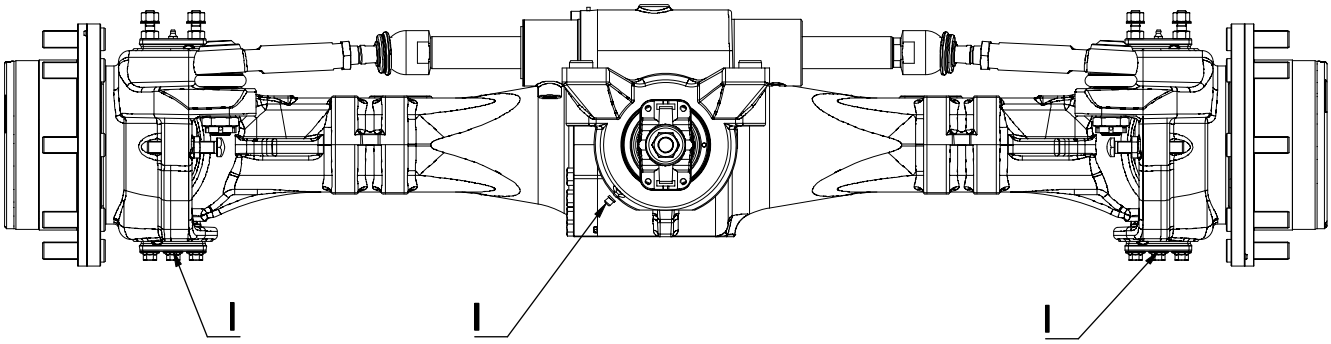

(fig.57/D)

- ATTENTION: - Read the SAFETY REGULATIONS (contained in this manual) carefully for the safety of all personnel and your vehicle.

Courtesy of Crane.Market

https://truckmanualshub.com/

BOOM SLIDING BLOCKS

Greasing
(Fig.60/D)

Boom sliding blocks must be kept lubricated to prevent deterioration as much as possible and keep movements smooth.

Extend the boom completely and examine its surface.

In the event that the layer of grease is thin or presents impurities (sand, dust, shavings, etc.) proceed as follows:

- With the boom completely extended horizontally, remove the layer of grease from the extension surfaces using a cloth.
- Use a brush to spread a layer of an approved type of grease on all sides of the telescopic boom.
- Move the boom several times to distribute the grease evenly.
- Remove any excess grease.

- ATTENTION -

During the visual check phase and spreading the grease, the vehicle must be off and the key removed from the cab to prevent accidental manoeuvres.

- ATTENTION:

Should the vehicle be used in particularly severe conditions or very dusty environments lubricate more frequently.

- ATTENTION:

Only use lubricants indicated in ***DIECI*** tables. Different lubricants may cause serious damage to sliding surfaces.

Sliding block wear

Consult the Summary Table at the start of the chapter for servicing intervals.

Sliding block wear can cause oscillations and slack between extensions causing a loss of accuracy in movements and the risk of load loss. The more difficult the working conditions, the greater the wear and tear on the vehicle. Boom sliding block maintenance must be carried out by an authorised workshop.

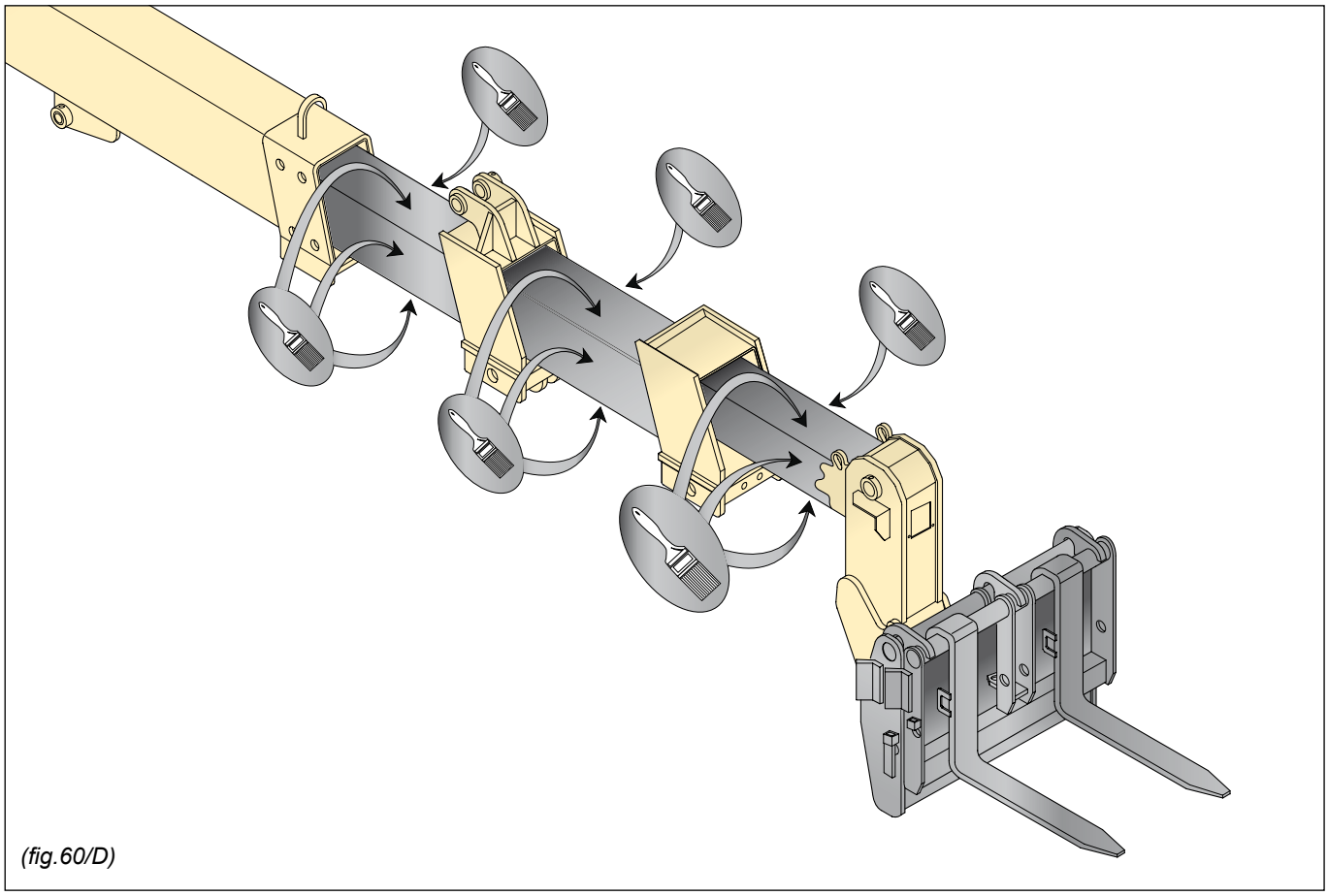

(fig.60/D)

Courtesy of Crane.Market

https://truckmanualshub.com/

dDIECI macchine edili ed agricole

Courtesy of Crane.Market

https://truckmanualshub.com/

GREASING NIPPLES

One extension telescopic booms.

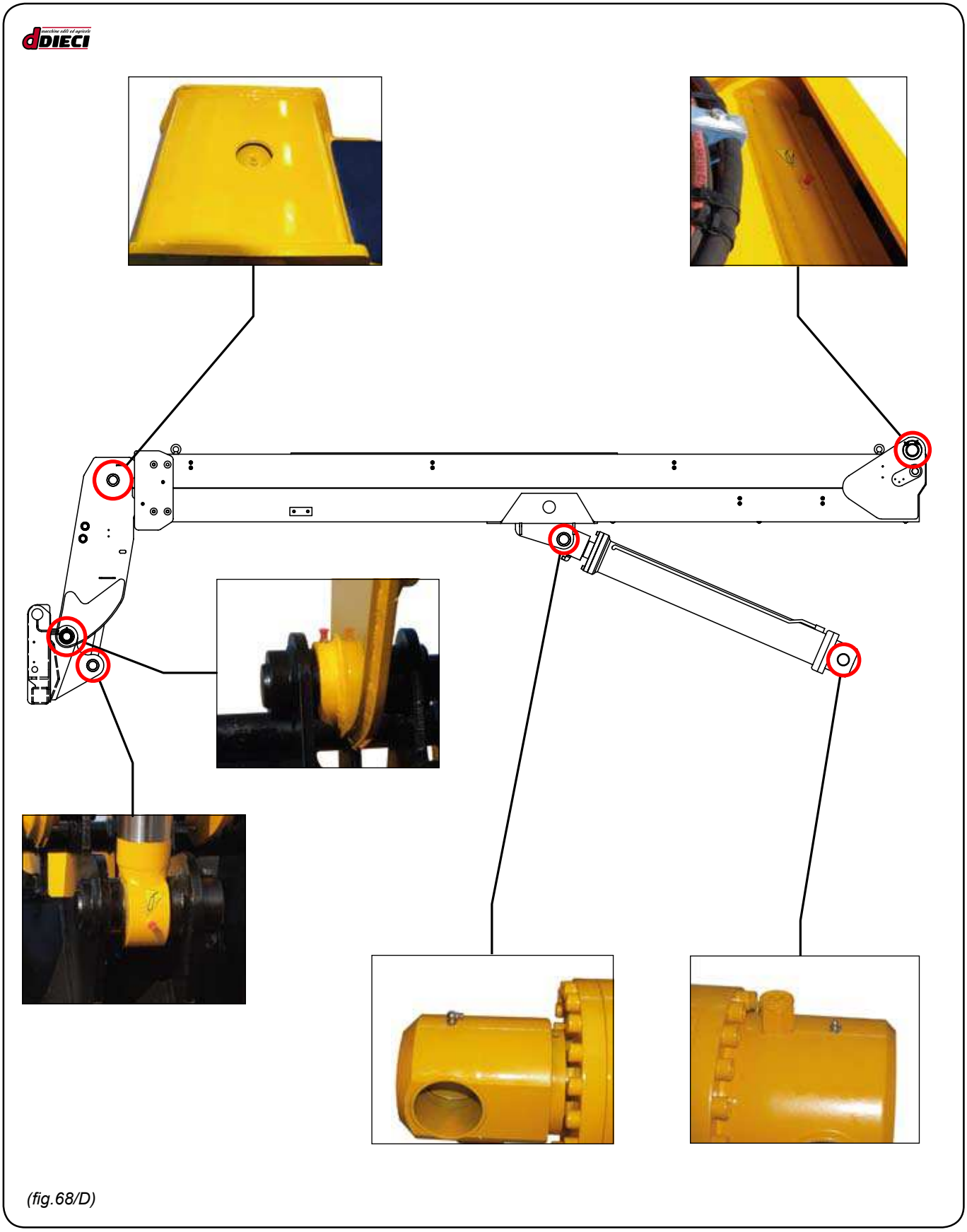

(fig.68/D)

- ATTENTION: - Read the SAFETY REGULATIONS (contained in this manual) carefully for the safety of all personnel and your vehicle.

Courtesy of Crane.Market

https://truckmanualshub.com/

GREASING NIPPLES
Transmission shafts and differential axles

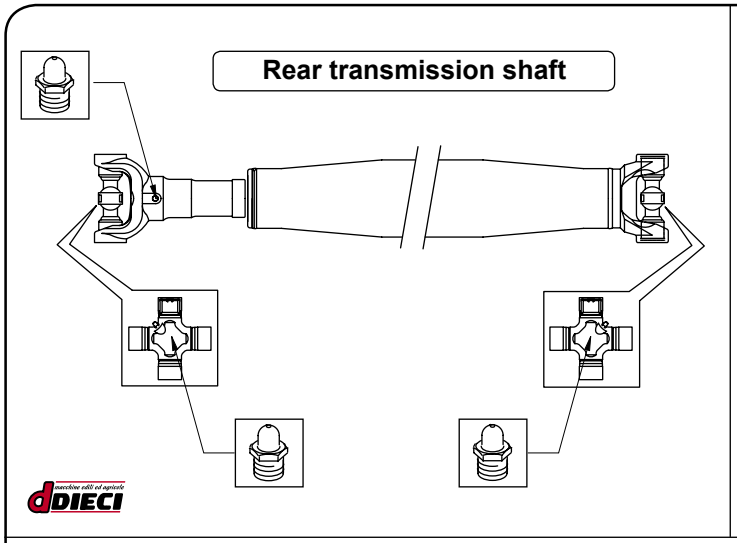

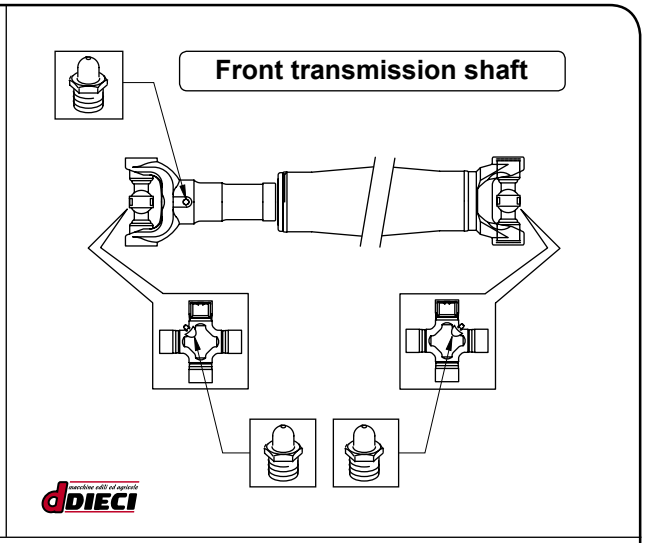

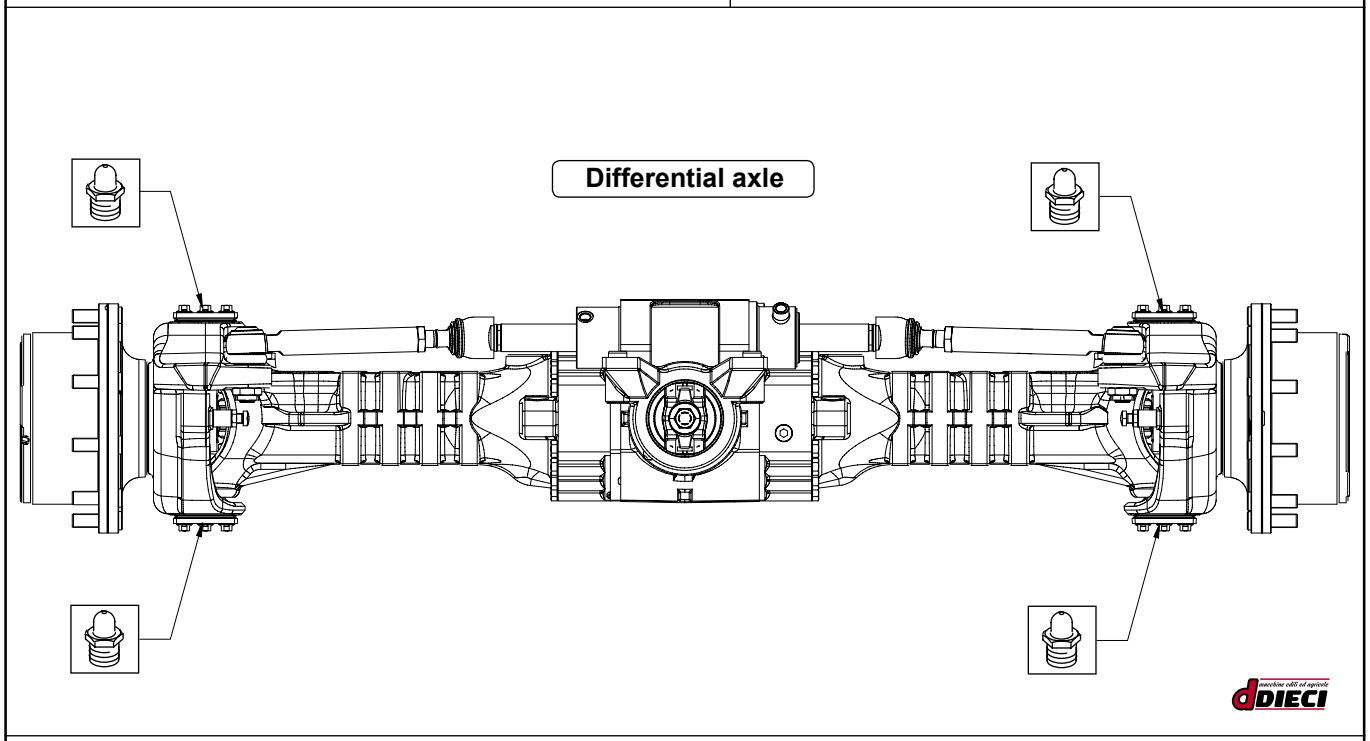

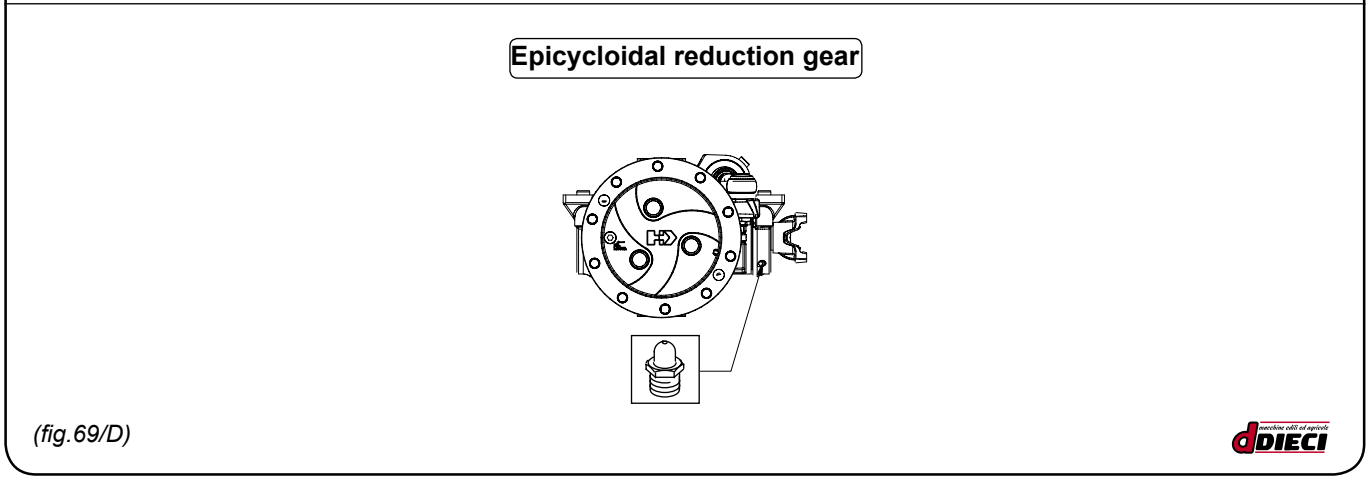

(fig.69/D)

- ATTENTION: - Read the SAFETY REGULATIONS (contained in this manual) carefully for the safety of all personnel and your vehicle.

Courtesy of Crane.Market

https://truckmanualshub.com/

BATTERY ISOLATOR SWITCH
(fig.78/D Pos.”1”)

The battery isolator switch is located in the rear of the engine compartment Its function is to cut off power to the electrical system, opening the circuit on the negative pole.

- Turn the handle moving it to horizontal position to open the circuit and disconnect electric power supply.

- Turn the handle moving it back to its original position (fig.78/D Pos.”1”) to reset starting conditions and close the circuit.

- ATTENTION -

The battery isolator switch must be used only with the vehicle off.

- ATTENTION -

Use the battery isolator switch to open the electrical circuit each time the vehicle is serviced.

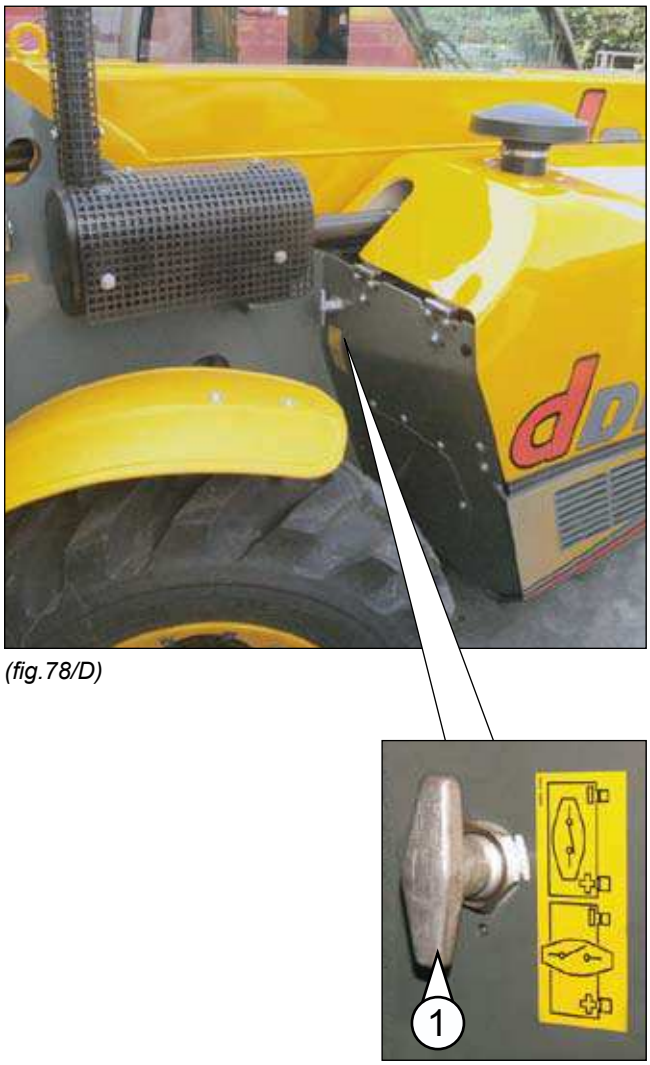

(fig.78/D)

Courtesy of Crane.Market

https://truckmanualshub.com/

FUSES
(fig.80/D Pos.”1”)

Main control unit

The general electric circuit is protected by fuses located on the general electronic card (fig.80/D Pos.”1”).
Access the electronic card by removing the left plastic under the dashboard, removing its screws.
In the event of an electrical malfunction, fuse conditions must be verified as the first troubleshooting operation. Fuses must be removed with special pliers.

To replace a fuse, remove it from its housing using special pliers and replace it with another fuse of equal class, quality and amperage. All other operations must be carried out by qualified, authorised personnel only.

***- ATTENTION*:**

Before removing the plastics under the dashboard, cut off electrical power to the vehicle using the battery isolator.

***- ATTENTION*:**

Do not attempt to repair fuses.

(fig.80/D)

Engine control unit (fig.81/D Pos.”1”)

Engine electrical circuits and connected components are protected by a fuse control box located within the engine compartment (fig.81/D Pos.”1”).
Remove the box cover to access the fuses.
In the event of an electrical malfunction, fuse conditions must be verified as the first troubleshooting operation.

To replace a fuse, remove it from its housing using special pliers and replace it with another fuse of equal class, quality and amperage. All other operations must be carried out by qualified, authorised personnel only.

***- ATTENTION*:**

Before accessing the engine compartment, switch off the vehicle and remove the ignition key, then, cut off electrical power to the vehicle using the battery isolator.

***- ATTENTION*:**

Do not attempt to repair fuses.

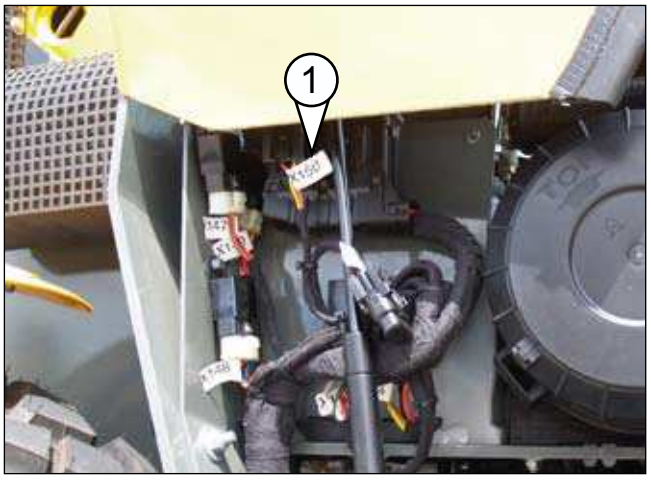

(fig.81/D)

- ATTENTION -

The main fuse of the vehicle is located onside the engine control unit.

Courtesy of Crane.Market

https://truckmanualshub.com/

LIGHTING

Vehicle lighting must always be efficient and functioning properly. Proper lighting function must be checked daily. If the lighting body is damaged in any way, replace the damaged part immediately. Burnt light bulbs should be replaced immediately.

FRONT LIGHT
(fig.82/D)

The front light is composed of a direction indicator, a position light, dipped light/headlight.

To access the bulbs:
- Switch off the vehicle and use the battery isolator to cut-out electrical power.
- Remove the power connection of the rear light.
- Remove the front part of the light by loosening its screws located in the rear cap.

To close the light back up, carry out these steps in the opposite order, being careful to position the seal correctly.

Replacing direction indicator bulbs
(fig.83/D Pos.”1”) (21w)
- Press the upper part of the bulb.
- Turn and hold down the bulb to free it from the lock.

Carry out the same steps to insert the new bulb.

Replacing position light bulbs
(fig.84/D Pos.”1”) (4w)
- Take hold of the rear part where the electrical connections are located (fig.84/D Pos.”2”).
- Turn and pull the rear part towards you.
- Remove the support and press the upper part of the bulb.
- Turn and hold down the bulb to free it from the lock.

Carry out the same steps to insert the new bulb. Reinsert the support inside its housing.

Replacing a dipped light/headlight bulb
(fig.85/D Pos.”1”) (60/55w H4)
- Remove the electrical connector by pulling it towards you.
- Raise the locking tabs (fig.85/D Pos.”2”), moving them laterally to free the bulb.
- Replace the bulb and proceed in the opposite order to lock and reconnect it. Respect bulb closing mechanisms (fig.85/D Pos.”3”) for proper insertion.

- ATTENTION -

The bulbs are very fragile. Handle them with care.

The dipped beam bulbs must not be handles with bare hands.

(fig.82/D)

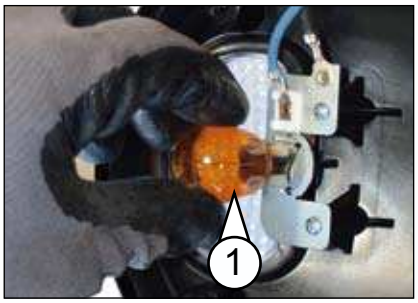

(fig.83/D)

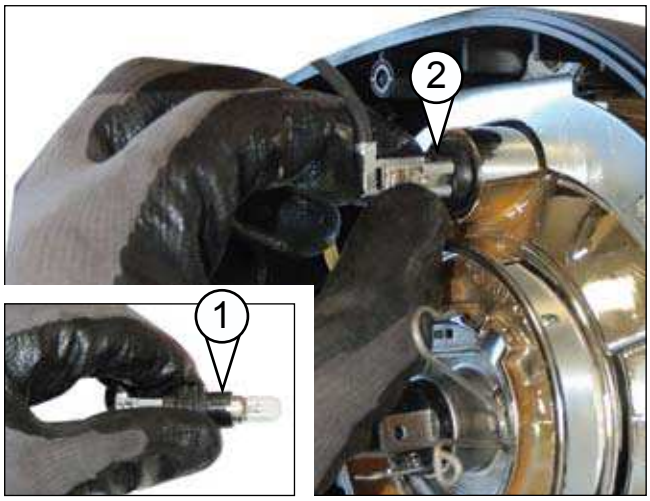

(fig.84/D)

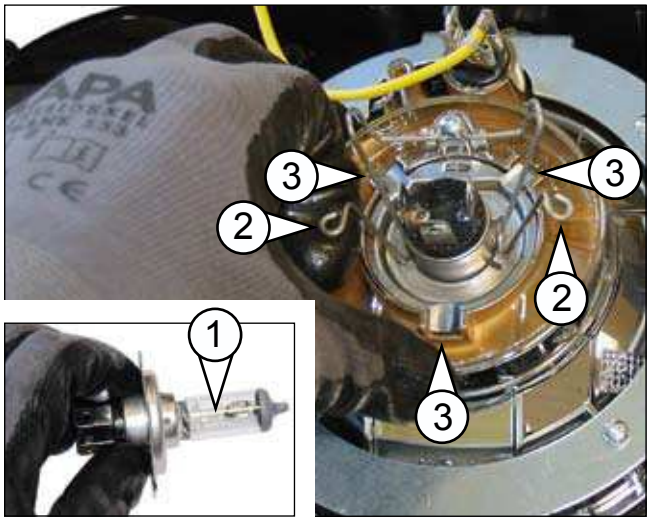

(fig.85/D)

- ATTENTION: - Read the SAFETY REGULATIONS (contained in this manual) carefully for the safety of all personnel and your vehicle.

Courtesy of Crane.Market

https://truckmanualshub.com/

REAR LIGHT
(fig.86/D)

The rear light is composed of a reverse light (21W) (fig.89/D Pos.”1”), rear red light (5W) (fig.89/D Pos.”2”), a stop light (21W) (fig.89/D Pos.”3”), and a direction indicator (21W) (fig.89/D Pos.”4”).

To access the bulbs:

- Switch off the vehicle and use the battery isolator to cut-out electrical power.
- Remove the power connection of the rear light.
- Remove the front part of the light by loosening its screws located on the cap.

- *ATTENTION*:

To close the light back up, carry out these steps in the opposite order, being careful to position the seal correctly.

Replacing the rear light bulb.

- Press the upper part of the bulb.
- Turn and hold down the bulb to free it from the lock.

Carry out the same steps in the opposite order to insert a new bulb.

WORK LIGHT
(fig.87/D)

Bulbs replacement
(fig.89/D Pos.”1”) (special bulb)

- Switch off the vehicle and use the battery isolator to cut-out electrical power.
- Remove the power connector of the light in the rear part (fig.88/D Pos.”1”).
- Press the connector grip on the light (fig. 88/D Pos.”2”).
- Turn and hold the grip down, to release it.

Carry out the same steps in the opposite order to insert a new bulb.

DUAL REFLECTOR WORKING LIGHT
(fig.90/D)

Bulbs replacement
(fig.91/D Pos.”1”) (Type 21w H3)

- Switch off the vehicle and use the battery isolator to cut-out electrical power.
- Remove the screws on the front part of the light.
- Remove the bulb power supply connectors (fig.91/D Pos.”2”).
- Move the locking tabs, bringing them towards the inside to release them (fig.91/D Pos.”3”).

Carry out the same steps in the opposite order to insert a new bulb. Treat the bulb closing mechanisms with care (fig.91/D Pos.”4”) for proper insertion.

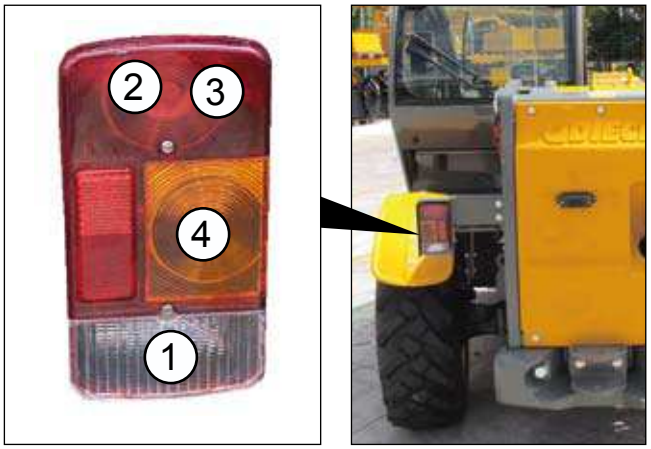

(fig.86/D)

(fig.87/D)

(fig.88/D)

(fig.89/D)

(fig.90/D)

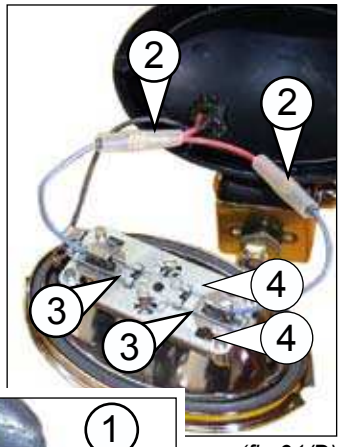

(fig.91/D)

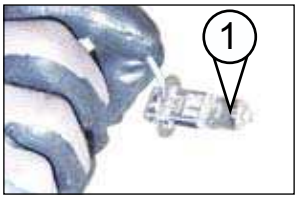

- ATTENTION: - Read the SAFETY REGULATIONS (contained in this manual) carefully for the safety of all personnel and your vehicle.

Courtesy of Crane.Market

https://truckmanualshub.com/

PRELOAD AND TORQUE TABLE FOR CLASS 1 NUTS AND BOLTS

	friction coefficient	Categories of fine pitch bolts and nuts											
		4.8		5.8		6.8		8.8		10.9		12.9	
		preload N	tightening torque Nm	preload N	tightening torque Nm	preload N	tightening torque Nm	preload N	tightening torque Nm	preload N	tightening torque Nm	preload N	tightening torque Nm
M8	**0.10**	9798.1	**10.87**	12247.6	**13.59**	14697.1	**16.31**	19596.1	**21.75**	27557.1	**30.58**	33068.5	**36.70**
	0.14	9079.5	**13.53**	11349.4	**16.91**	13619.3	**20.29**	18159.1	**27.05**	25536.2	**38.04**	30643.4	**45.65**
M10	**0.10**	15296.9	**21.13**	19121.1	**26.41**	22945.3	**31.69**	30593.8	**42.25**	43022.5	**59.42**	51627.0	**71.30**
	0.14	14175.0	**26.27**	17718.8	**32.84**	21262.6	**39.41**	28350.1	**52.55**	39867.3	**73.89**	47840.8	**88.67**
M12	**0.10**	22020.7	**35.83**	27525.9	**44.79**	33031.0	**53.75**	44041.4	**71.67**	61933.2	**100.78**	74319.8	**120.94**
	0.14	20405.8	**44.53**	25507.2	**55.66**	30608.7	**66.79**	40811.6	**89.06**	57391.3	**125.24**	68869.5	**150.29**
M14	**0.10**	31610.0	**59.04**	39512.5	**73.80**	47415.0	**88.57**	63220.0	**118.09**	88903.1	**166.06**	106683.7	**199.27**
	0.14	29345.9	**73.92**	36682.4	**92.40**	44018.9	**110.89**	58691.9	**147.85**	82535.4	**207.91**	99042.5	**249.49**
M16	**0.10**	42581.3	**89.78**	53226.6	**112.23**	63871.9	**134.67**	85162.5	**179.56**	119759.8	**252.51**	143711.8	**303.02**
	0.14	39587.8	**113.06**	49484.7	**141.32**	59381.6	**169.59**	79175.5	**226.12**	111340.6	**317.98**	133608.7	**381.57**
M18	**0.10**	51457.2	**124.03**	64321.5	**155.03**	77185.8	**186.04**	102914.4	**248.06**	144723.3	**348.83**	173668.0	**418.59**
	0.14	47751.7	**155.02**	59689.6	**193.78**	71627.5	**232.53**	95503.3	**310.05**	134301.6	**436.00**	161161.9	**523.20**
M20	**0.10**	65534.1	**173.72**	81917.7	**217.16**	98301.2	**260.59**	131068.3	**347.45**	184314.8	**488.60**	221177.8	**586.32**
	0.14	60886.2	**218.17**	76107.8	**272.71**	91329.3	**327.26**	121772.4	**436.34**	171242.5	**613.61**	205491.0	**736.33**
M22	**0.10**	81220.8	**236.88**	101526.0	**296.10**	121831.2	**355.32**	162441.5	**473.76**	228433.4	**666.23**	274120.1	**799.48**
	0.14	75533.9	**298.75**	94417.4	**373.43**	113300.9	**448.12**	151067.8	**597.49**	212439.1	**840.22**	254927.0	**1008.27**
M24	**0.10**	98515.6	**308.56**	123144.5	**385.70**	147773.4	**462.84**	197031.1	**617.12**	277075.0	**867.83**	332490.0	**1041.40**
	0.14	91693.3	**390.33**	114616.6	**487.92**	137539.9	**585.50**	183386.5	**780.67**	257887.3	**1097.82**	309464.8	**1317.38**

- ATTENTION: - Read the SAFETY REGULATIONS (contained in this manual) carefully for the safety of all personnel and your vehicle.

Courtesy of Crane.Market

PRELOAD AND TORQUE TABLE FOR CLASS 2 NUTS AND BOLTS

	friction coefficient	Categories of wide pitch nuts and bolts											
		4.8		5.8		6.8		8.8		10.9		12.9	
		preload N	tightening torque Nm	preload N	tightening torque Nm	preload N	tightening torque Nm	preload N	tightening torque Nm	preload N	tightening torque Nm	preload N	tightening torque Nm
M6	0.10	4874.7	**4.24**	6093.4	**5.30**	7312.1	**6.35**	9749.4	**8.47**	13710.1	**11.92**	16452.2	**14.30**
	0.14	4499.1	**5.19**	5623.9	**6.48**	6748.6	**7.78**	8998.2	**10.37**	12653.7	**14.59**	15184.4	**17.51**
M7	0.10	7134.5	**6.97**	8918.2	**8.71**	10701.8	**10.45**	14269.1	**13.94**	20065.9	**19.60**	24079.1	**23.52**
	0.14	6599.6	**8.60**	8249.5	**10.76**	9899.4	**12.90**	13199.2	**17.21**	18561.4	**24.20**	22273.6	**29.04**
M8	0.10	8947.1	**10.20**	11183.9	**12.75**	13420.7	**15.30**	17894.2	**20.41**	25163.7	**28.70**	30196.5	**34.44**
	0.14	8265.6	**12.54**	10332.0	**15.67**	12398.4	**18.80**	16531.2	**25.07**	23247.0	**35.26**	27896.5	**42.31**
M10	0.10	14244.5	**20.11**	17805.6	**25.14**	21366.8	**30.16**	28489.0	**40.22**	40062.7	**56.56**	48075.3	**67.87**
	0.14	13167.4	**24.76**	16459.2	**30.95**	19751.1	**31.14**	26334.8	**49.52**	37033.3	**69.64**	44439.9	**83.56**
M12	0.10	20766.6	**34.43**	25958.3	**43.03**	31149.9	**51.64**	41533.2	**68.86**	58406.1	**96.83**	70087.3	**116.20**
	0.14	19204.0	**42.42**	24005.0	**53.03**	28806.0	**63.63**	38408.0	**84.84**	54011.2	**119.31**	64813.5	**143.17**
M14	0.10	28389.9	**54.77**	35487.4	**68.46**	42584.9	**82.15**	56779.8	**109.53**	79846.6	**154.03**	95816.0	**184.84**
	0.14	26261.2	**67.56**	32826.5	**84.45**	39391.8	**101.34**	52522.4	**135.13**	73859.6	**190.02**	88631.5	**228.03**
M16	0.10	39242.1	**85.14**	49052.7	**106.43**	58863.2	**127.72**	78484.3	**170.29**	110368.5	**239.47**	132442.2	**287.36**
	0.14	36364.2	**105.80**	45455.3	**132.26**	54546.3	**158.71**	72728.5	**211.61**	102274.4	**297.58**	122729.3	**357.09**
M18	0.10	47533.0	**117.48**	59416.3	**146.85**	71299.6	**176.22**	95066.1	**234.96**	133686.7	**330.41**	160424.1	**396.49**
	0.14	43986.1	**145.16**	54982.7	**181.45**	65979.2	**217.74**	87972.3	**290.32**	123711.0	**402.26**	148453.2	**489.92**
M20	0.10	61238.0	**166.08**	76547.5	**207.61**	91857.0	**249.13**	122476.0	**332.17**	172231.9	**467.11**	206678.2	**560.54**
	0.14	56747.1	**206.39**	70933.9	**257.98**	85120.6	**309.58**	113494.2	**412.78**	159601.2	**580.47**	191521.5	**696.56**
M22	0.10	76305.2	**227.22**	95381.5	**284.02**	114457.8	**340.82**	152610.4	**454.43**	214608.3	**639.05**	257530.0	**766.85**
	0.14	70791.9	**283.79**	88489.8	**352.74**	106187.8	**425.69**	141583.7	**567.58**	199102.1	**798.16**	238922.5	**957.80**
M24	0.10	88232.4	**287.16**	110290.5	**358.94**	132348.6	**430.73**	176464.9	**574.31**	248153.7	**807.63**	297784.4	**969.15**
	0.14	81761.8	**356.84**	102202.2	**446.05**	122642.7	**535.26**	163523.6	**713.68**	229955.1	**1003.61**	275946.1	**1204.33**

- ATTENTION: - Read the SAFETY REGULATIONS (contained in this manual) carefully for the safety of all personnel and your vehicle.

Courtesy of Crane.Market

https://truckmanualshub.com/

TORQUE TABLE FOR HYDRAULIC FITTINGS

60° oval insert - BSP thread									
THREAD	1/18-28	1/4-19	3/8-19	1/2-14	5/8-14	3/4-14	1”-11	1”1/4-11	1”1/2-11
N.m	12-14	14-16	25-28	45-60	55-70	90-110	120-140	170-190	200-245

60° oval insert - METRIC thread									
THREAD	10x1	12x1,5	14x1,5	16x1,5	18x1,5	22x1,5	26x1,5	28x1,5	30x1,5
N.m	12-14	13-15	15-18	25-28	27-30	50-60	60-75	80-100	110-130

DIN FITTINGS SERIES / RANGE “L”										
THREAD	12x1,5	14x1,5	16x1,5	18x1,5	22x1,5	26x1,5	30x2	36x1,5	45x1,5	52x1,5
N.m	13-15	15-18	25-28	27-30	50-60	30-75	85-105	120-140	170-190	190-230

DIN FITTINGS SERIES / RANGE “S”										
THREAD	14x1,5	16x1,5	18x1,5	20x1,5	22x1,5	24x1,5	30x2	36x2	42x2	52x2
N.m	15-18	25-28	27-30	43-54	50-62	60-75	90-110	125-145	170-190	200-245

- ATTENTION: - Read the SAFETY REGULATIONS (contained in this manual) carefully for the safety of all personnel and your vehicle.

Courtesy of Crane.Market

https://truckmanualshub.com/

TROUBLESHOOTING

- ATTENTION

Only authorised staff should intervene on the vehicle to eliminate any trouble or breakdown.

Make sure “User Instructions” and “Safety Regulations” have been read and clearly understood before attempting any repair work on the vehicle.

This symbol means that the trouble can NOT be remedied without the assistance of an authorised **DIECI *Service* repair shop.**

GROUP	TROUBLE	PROBABLE CAUSE	REMEDY
ENGINE	The vehicle will not start	Direction lever is engaged	Put the lever in neutral
		No fuel	Fill the tank, “purge” the engine.
		Battery dead	Recharge the battery or replace it
		Burnt out fuse	Change the fuse
		Others	Consult the handbook Engine User Instructions and Maintenance Manual

GROUP	TROUBLE	PROBABLE CAUSE	REMEDY
HYDRAULIC TRANSMISSION SYSTEM	The vehicle does move in any direction.	The sensor incorporated in the seat does not detect the driver’s presence.	Sit down correctly
		The forward/reverse lever is not engaged (indicator light switched off)	Engage the lever in the required position
		Slow/fast speed switch (indicator light switched off)	Press the switch
	The vehicle loses speed	Hydraulic oil suction filter blocked.	Remove the oil filter and replace it
		Hydrostatic transmission failure.	Repair or replace the transmission
		Inching pedal anomaly.	Check the pedal return spring Check distributor position

Cont. from page D/44

- ATTENTION: - Read the SAFETY REGULATIONS (contained in this manual) carefully for the safety of all personnel and your vehicle.

Courtesy of Crane.Market

https://truckmanualshub.com/

TROUBLE SHOOTING

GROUP	TROUBLE	PROBABLE CAUSE	REMEDY
HYDRAULIC TRANSMISSION SYSTEM	The vehicle does not move in any direction.	Level of hydraulic oil insufficient	Check the level of hydraulic oil
		Parking brake on	Disengage the brake
		Trasmissione idrostatica in avaria	Repair or replace the transmission DIECI
		Electric circuit damaged	Repair the circuit
		The slide valve under the car has been closed (vehicle tow)	Open the slide valve

GROUP	TROUBLE	PROBABLE CAUSE	REMEDY
BRAKES	The vehicle does not brake	There is no oil in the oil – brake tank	Drain the system or top up the tank
		Fluid leaking from the circuit	Check for leaks
		Brake pads worn	Change the brake pads
		Brake pump damaged	Repair or replace DIECI
		Unsuitable fluid in the circuit or differential sump	Consult the comparative oil table DIECI

GROUP	TROUBLE	PROBABLE CAUSE	REMEDY
STEERING	The vehicle moves diagonally/ The wheels are not aligned	The wheels are not aligned correctly	Proceed with realignment.
		Steering selection error	Position the lever in a different steering mode
		Control distributor failure	Repair or replace the distributor DIECI
		The steering wheel hydraulic cylinders leak oil.	Replace the gaskets DIECI

- ATTENTION: - Read the SAFETY REGULATIONS (contained in this manual) carefully for the safety of all personnel and your vehicle.

Courtesy of Crane.Market

https://truckmanualshub.com/

TROUBLE SHOOTING

GROUP	TROUBLE	PROBABLE CAUSE	REMEDY
TELESCOPIC BOOM	The vehicle will not lift load	Safety systems have been activated	Refer to the chapter entitled “Getting to know the vehicle”
		Electrical system failure	Check fuses and the electrical system
		Hydraulic oil level in tank insufficient	Top up
		Relevant hydraulic pump failure	Repair or replace pump
		Distributor calibrated too low	Check and retract the distributor
		Internal leakage of raising cylinders.	Replace the gaskets
	The boom does not extend	The safety devices have been activated (indicator lights switched on and audible alarm sounding)	Refer to the chapter entitled “Getting to know the vehicle”
	The boom cannot be lowered	The safety devices have been activated (indicator lights switched on and audible alarm sounding)	Refer to the chapter entitled “Getting to know the vehicle”

Courtesy of Crane.Market

https://truckmanualshub.com/

HOW TO WRITE OUT THE SERVICE REGISTER

- The **"SERVICE REGISTER"** must be written in compliance with the requirements imposed by the Essential Safety Requirement 4.4.2.b of Enclosure I of Machine Directive **EC/98/37**, in order to prove that all the inspection and service activities of the machine concerning safety of the same are carried out correctly.
- Together with all the activities concerning the life and use of the machine (replacement of parts, mot's, anomalies etc.) the Service Register must also include notes on all the quarterly and yearly inspections legally envisaged, amongst which are those indicated in the "Maintenance" section and "Equipment" chapter of this manual.
- The name of the service engineer and the date the job was carried must also be clearly written.
- **You are recommended to write out, up-date and keep this Service Register with care throughout the whole life of the machine.**
- We are providing some empty pages to help create your own Service Register.

COMMITMENTS AND HOW TO FORWARD DECLARATIONS TO I.S.P.E.S.L.

- The M.D. dated 12/09/1959, under Title II – Article 7, states that the employer and users of **engine-driven lifting equipment having capacities greater than 200 kg** and **people carrying platforms** , are obliged to inform the competent authority of the territory (currently the **I.S.P.E.S.L.** in Italy), when the machine is commissioned, specifying the place of installation of the machine so that this authority may make an **initial inspection**.
- This fulfilment is confirmed by Article 11 – section 3 of **DPR 459** dated 24/07/1996, national law that transposes **Machine Directive EC/98/37**.
- The declaration to I.S.P.E.S.L. must be made by enclosing a copy of the **EC Declaration of conformity** of the machine, with reference to **Enclosure IIA** of DPR 459/96 – Machine Directive EC/98/37.
- The original declarations (EC Declaration of conformity – Enclosure IIA or rather the Declaration of the Manufacturer – Enclosure IIB) must be kept by the client.
- The declaration shall be forwarded to I.S.P.E.S.L.by Registered mail with receipt of reception.
- I.S.P.E.S.L. will then inform the local supervision authority (ASL in Italy) that the machine is in use; this authority is then in charge of **following yearly inspections**.

PERIODIC INSPECTIONS AND METHOD OF REGISTRATION

- The employer or the user of the machine is obliged to have the machine inspected periodically according to law (DPR 547 dated 27/4/55; MD 12/9/59 and LD 626 dated 19/9/94).
- He is also obliged to respect the maintenance and inspection schedule described in this Use and Maintenance manual.
- Inspections and periodic tests, together with maintenance jobs must be carried out by especially employed experts, or by a repair shop authorised by the manufacturer ***DIECI S.r.l.***
- The employer/user of the machine must register the results of the inspections in the Service Register, or have personnel trained for such purpose to register them:
  - **a)** **Quarterly inspections** that involve the operation and/or efficiency of ropes/chains according to **Article 179** of **DPR 547** dated **27/4/55**
  - **b)** **Yearly inspections** that involve the operation and the preservation of the machine in terms of safety (yearly tests, corrosion inspections, calibration tests etc.) according to **Article 194** of **DPR 547** dated **27/4/55.**
- Law foresees administrative fines to the charge of those who fail to carry out these quarterly and yearly inspections.
- The Service Register, in which the inspections are to be written, must be shown on request to the inspectors in charge of ensuring that the current laws are observed.
- After the yearly inspection has been carried out, the inspector of ASL will issue an acceptance report or will prescribe the fulfilments to be integrated. The user is obliged to keep the inspection report in the Service Register.
- If the local supervising authority (ASL in Italy) should fail to make the yearly inspection, you are in any event recommended to have the yearly inspection carried out by a qualified engineer and write the results down in the Service Register.
- The evaluations of the inspections must be registered in the reserved pages that follow, indicating the outcome of the inspection, the date, the signature and any comments of the inspector.
- If the pages reserved within this manual are not enough to hold all the notes concerning the life of the machine, use additional sheets of paper, remembering to write them out in the same manner.

- ATTENTION: - Read the SAFETY REGULATIONS (contained in this manual) carefully for the safety of all personnel and your vehicle.

Courtesy of Crane.Market

https://truckmanualshub.com/

MACHINE DETAILS

Manufacturer: ***Dieci S.r.l.***

Model: .....serial number ..... Year .....

Equipment code ..... serial number ..... Year .....

Max. capacity [kg]: .....

Equipment code ..... serial number ..... Year .....

Max. capacity [kg]: .....

Equipment code ..... serial number ..... Year .....

Max. capacity [kg]: .....

Equipment code ..... serial number ..... Year .....

Max. capacity [kg]: .....

Owner: .....

Work commencement date of machine: .....

FOR FURTHER CONTROLS OR REPORTS TO THE COMPETENT AUTHORITIES, PLEASE REFER TO THE LOCAL LEGISLATION IN FORCE IN THE COUNTRY WHERE THE VEHICLE IS BEING USED.

Courtesy of Crane.Market

https://truckmanualshub.com/

- ATTENTION: - Read the SAFETY REGULATIONS (contained in this manual) carefully for the safety of all personnel and your vehicle.

Courtesy of Crane.Market

https://truckmanualshub.com/

RECORD OF SCHEDULED INSPECTIONS AND MAINTENANCE WORK

REGULAR MAINTENANCE 50 h

Job	Job accomplished ☒
Boom joint pin lubrication	☐
Lubrication of foot/head swivel jack	☐
Lubrication of foot/head raising jack	☐
Lubrication of front and rear articulated pins	☐
Lubrication of rear axle oscillation bush (if present)	☐
Lubrication of front axle oscillation bush (if present)	☐
Lubrication of cross and Cardan transmission shafts	☐
Lubrication of boom sliders, rollers and chains	☐
Lubrication of differential axles	☐
Carry out anti-tipping device electronic test	☐
	☐
	☐
	☐

Date ..... Signature .....

SPECIAL MAINTENANCE

Job description	Machine working hours

Date ..... Signature .....

REGULAR MAINTENANCE 100 h

Job	Job accomplished ☒
Filtering septum cleaning	☐
Alternator belt check	☐
Decal check	☐
Check electrical system	☐
Ensure radiator is not clogged	☐
Check battery electrolyte level	☐
Check gear oil level	☐
Braking system oil level check	☐
Check differential sump level	☐
Check epicycloidal reduction gear oil level	☐
Carry out anti-tipping device loaded test	☐
	☐
	☐

Date ..... Signature .....

SPECIAL MAINTENANCE

Job description	Machine working hours

Date ..... Signature .....

- ATTENTION -

The maintenance work in bold type is considered fundamental by *DIECI* for people's safety.

- ATTENTION -

Maintenance must be carried out by qualified personnel who must sign the scheduled maintenance report.

- ATTENTION: - Read the SAFETY REGULATIONS (contained in this manual) carefully for the safety of all personnel and your vehicle.

Courtesy of Crane.Market

https://truckmanualshub.com/

macchine edili ed agricole

DIECI

- ATTENTION: - Read the SAFETY REGULATIONS (contained in this manual) carefully for the safety of all personnel and your vehicle.

Courtesy of Crane.Market

https://truckmanualshub.com/

REGULAR MAINTENANCE 300h

Job	Job accomplished ☒
Tighten wheel nuts	☐
Tighten boom sliders	☐
Replace cab filter	☐
Replace engine oil filter	☐
Replace engine oil	☐
	☐
	☐
	☐
	☐
	☐
	☐
	☐
	☐

Date ..... Signature .....

SPECIAL MAINTENANCE

Job description	Machine working hours

Date ..... Signature .....

REGULAR MAINTENANCE 500 h

Job	Job accomplished ☒
Diesel tank discharge and cleaning	☐
Complete replacement air filter	☐
Hydrostatic oil filter replacement	☐
Replace diesel fuel filter.	☐
Replace diesel separator filter.	☐
	☐
	☐
	☐
	☐
	☐
	☐
	☐
	☐

Date ..... Signature .....

SPECIAL MAINTENANCE

Job description	Machine working hours

Date ..... Signature .....

- ATTENTION -

The maintenance work in bold type is considered fundamental by *DIECI* for people's safety.

- ATTENTION -

Maintenance must be carried out by qualified personnel who must sign the scheduled maintenance report.

- ATTENTION: - Read the SAFETY REGULATIONS (contained in this manual) carefully for the safety of all personnel and your vehicle.

Courtesy of Crane.Market

https://truckmanualshub.com/

macchine edili ed agricole

dDIECI

- ATTENTION: - Read the SAFETY REGULATIONS (contained in this manual) carefully for the safety of all personnel and your vehicle.

Courtesy of Crane.Market

https://truckmanualshub.com/

REGULAR MAINTENANCE 1000h

Job	Job accomplished ☒
Replace hydraulic oil suction filter	☐
Replace speed gear oil	☐
Replacement axles central differential oil	☐
Replace hydraulic system oil	☐
Replace oil in axles epicycloidal reduction gears	☐
	☐
	☐
	☐
	☐
	☐
	☐
	☐
	☐

Date ..... Signature .....

dDIECI

SPECIAL MAINTENANCE

Job description	Machine working hours

Date ..... Signature .....

dDIECI

REGULAR MAINTENANCE 1200h

Job	Job accomplished ☒
Replace braking system oil	☐
Replacing cooling liquid	☐
	☐
	☐
	☐
	☐
	☐
	☐
	☐
	☐
	☐
	☐
	☐

Date ..... Signature .....

dDIECI

SPECIAL MAINTENANCE

Job description	Machine working hours

Date ..... Signature .....

dDIECI

- ATTENTION -

The maintenance work in bold type is considered fundamental by *DIECI* for people's safety.

- ATTENTION -

Maintenance must be carried out by qualified personnel who must sign the scheduled maintenance report.

- ATTENTION: - Read the SAFETY REGULATIONS (contained in this manual) carefully for the safety of all personnel and your vehicle.

Courtesy of Crane.Market

https://truckmanualshub.com/

- ATTENTION: - Read the SAFETY REGULATIONS (contained in this manual) carefully for the safety of all personnel and your vehicle.

Courtesy of Crane.Market

REGULAR MAINTENANCE h

Job	Job accomplished ☒
	☐
	☐
	☐
	☐
	☐
	☐
	☐
	☐
	☐
	☐
	☐
	☐
	☐

Date ..... Signature .....

SPECIAL MAINTENANCE

Job description	Machine working hours

Date ..... Signature .....

REGULAR MAINTENANCE h

Job	Job accomplished ☒
	☐
	☐
	☐
	☐
	☐
	☐
	☐
	☐
	☐
	☐
	☐
	☐
	☐

Date ..... Signature .....

SPECIAL MAINTENANCE

Job description	Machine working hours

Date ..... Signature .....

- ATTENTION -

The tables must be filled out clearly, using the spaces provided.

- ATTENTION -

Maintenance must be carried out by qualified personnel who must sign the scheduled maintenance report.

- ATTENTION: - Read the SAFETY REGULATIONS (contained in this manual) carefully for the safety of all personnel and your vehicle.

Courtesy of Crane.Market

https://truckmanualshub.com/

- ATTENTION: - Read the SAFETY REGULATIONS (contained in this manual) carefully for the safety of all personnel and your vehicle.

Courtesy of Crane.Market

https://truckmanualshub.com/

REGULAR MAINTENANCE h

Job	Job accomplished ☒
	☐
	☐
	☐
	☐
	☐
	☐
	☐
	☐
	☐
	☐
	☐
	☐
	☐

Date ..... Signature .....

dDIECI

SPECIAL MAINTENANCE

Job description	Machine working hours

Date ..... Signature .....

dDIECI

REGULAR MAINTENANCE h

Job	Job accomplished ☒
	☐
	☐
	☐
	☐
	☐
	☐
	☐
	☐
	☐
	☐
	☐
	☐
	☐

Date ..... Signature .....

dDIECI

SPECIAL MAINTENANCE

Job description	Machine working hours

Date ..... Signature .....

dDIECI

- ATTENTION -

The tables must be filled out clearly, using the spaces provided.

- ATTENTION -

Maintenance must be carried out by qualified personnel who must sign the scheduled maintenance report.

- ATTENTION: - Read the SAFETY REGULATIONS (contained in this manual) carefully for the safety of all personnel and your vehicle.

Courtesy of Crane.Market

https://truckmanualshub.com/

- ATTENTION: - Read the SAFETY REGULATIONS (contained in this manual) carefully for the safety of all personnel and your vehicle.

Courtesy of Crane.Market

https://truckmanualshub.com/

REGULAR MAINTENANCE h

Job	Job accomplished ☒
	☐
	☐
	☐
	☐
	☐
	☐
	☐
	☐
	☐
	☐
	☐
	☐
	☐

Date ..... Signature .....

SPECIAL MAINTENANCE

Job description	Machine working hours

Date ..... Signature .....

REGULAR MAINTENANCE h

Job	Job accomplished ☒
	☐
	☐
	☐
	☐
	☐
	☐
	☐
	☐
	☐
	☐
	☐
	☐
	☐

Date ..... Signature .....

SPECIAL MAINTENANCE

Job description	Machine working hours

Date ..... Signature .....

- ATTENTION -

The tables must be filled out clearly, using the spaces provided.

- ATTENTION -

Maintenance must be carried out by qualified personnel who must sign the scheduled maintenance report.

- ATTENTION: - Read the SAFETY REGULATIONS (contained in this manual) carefully for the safety of all personnel and your vehicle.

Courtesy of Crane.Market

https://truckmanualshub.com/

macchine edili ed agricole

DIECI

- ATTENTION: - Read the SAFETY REGULATIONS (contained in this manual) carefully for the safety of all personnel and your vehicle.

Courtesy of Crane.Market

https://truckmanualshub.com/

ELECTRICAL DIAGRAMS AND CIRCUITS

E

Courtesy of Crane.Market

https://truckmanualshub.com/

Courtesy of Crane.Market

BASE SYSTEM KEY - DWG. N° E25800-055F

NAME	DESCRIPTION	SHEET
A100	Can checker	1.5
A128	EGR ENGINE PITCH	1.4
A131	ECU CONTROL UNIT	1.4
A135	Actuator rack control unit	1.4
A148	Actuator relay	1.4
A149	Main relay	1.4
A158	Left acoustic diffuser	8.3
A159	Right acoustic diffuser	8.3
A164	Radio	8.2
A202	CAN terminator	1.5
B105	Fuel level transmitter	1.3
B108	Rear axle alignment sensor	3.1
B112	Load cell n. 1	8.4
B113	Front axle alignment sensor	3.2
B114	Engine oil low pressure	1.2
B129	Engine water max temperature	1.2
Bfl4	SPEED SENSOR	1.5
B140	Clogged hydraulic oil filter	1.3
B185	Stop lights pressure switch	4.4
B201	ACCELERATOR SENSOR	1.4
B500	Clogged air filter	2.1
B129b	Engine water temperature transmitter	1.2
E103	Left tail light 4.1	8.4
E104	Plate light	4.2
E107	Right rear light line connector	4.1
E115	Right front light	4.2
EH6	Right front light	4.3
E155	Right rear work light	6.2
E156	Left rear work light	6.2
E160	Courtesy light	8.1
E161	Right front work light	6.4
E162	Left front work light	6.3
E163	Revolving light	3.2
F1	FUSE SAFETY RELAY FROM BASKET	3.3
F2	RADIO FUSE 3A	8.2
F3	BUZZER AND REVERSE LIGHT FUSE 5A	2.2
F4	FAST/SLOW GEAR SELECTOR FUSE 7.5A	2.2
F5	HYDRAULIC SOCKET FUSE AND 7.5A POWER TAKE-OFF	7.1
F6	ANTI-TIPPING FUSE 7.5A	3.4
F7	15.A PNEUMATIC SEAT FUSE	7.5
F8	5A OPTIONAL FUSE	4.5
F9	10A OPTIONAL FUSE	2.4
F10	SWITCHES LIGHTING FUSE 7.5A	4.2
F11	FUSE LIGHT STOP 10A	4.1
F12	REAR ALIGNMENT SENSORS FUSE 3A	3.1
F13	7.5A BOOM HEAD SOLENOID VALVE FUSE	7.4
F14	5A POSITION LIGHT FUSE	4.1
F15	5A POSITION LIGHT FUSE	4.1
F16	10A BEAM HEADLIGHT FUSE	4.2
F17	HORN FUSE 10A	4.4

Courtesy of Crane.Market

https://truckmanualshub.com/

BASE SYSTEM KEY - DWG. N° E25800-055F

NAME	DESCRIPTION	SHEET
F18	DIPPED BEAM HEADLIGHT FUSE 10A	4.2
F19	FRONT WINDSCREEN WIPER FUSE 15A	3.3
F20	REAR WINDSCREEN WIPER FUSE 15A	3.2
F21	OPTIONAL POWER SUPPLIES FUSE 15A	5.2
F22	FRONT WORK LIGHTS FUSE 10A	6.2
F23	REAR WORK LIGHTS FUSE 10A	6.1
F24	BASKET FUSE F7.5A	5.2
F25	HEATING FAN FUSE 15A	7.2
F26	PARKING BRAKE + START GEAR FUSE 7.5A	2.2
F27	SEAT MICRO FUSE 7.5A	1.4
F28	WARNNG FUSE 7.5A	4.3
F29	REVOLVING LIGHT FUSE 7.5A	3.1
F30	RADIO + CEILING LIGHT FUSE 5A	8.2
F31	MULTIFUNCTIONAL INSTRUMENT PANEL FUSE 10A	1.4
F32	CURRENT SOCKET FUSE 7.5A	3.5
F33	OPTIONAL FUSE 7.5A	7.2
F34	AIR CONDITIONER 15A	6.4
F35	BASKET FUSE 15A	5.2
F36	OPTIONAL FUSE 3A	1.3
F150	main relay fuse	1.1
F194	engine supply fuse	1.2
FG1	fuse +30 alternator	1.1
FG2	pre-heat relay fuse	1.1
FG3	cab main power supply fuse	1.1
FG4	ignition relay power supply fuse	1.1
G1	BATTERY	1.1
G138	ALTERNATOR	1.2
H100	Reverse buzzer	2.2
H114	BUZZER	4.3
HA1	BUZZER	1.4
K1	BEAM HEADLIGHTS RELAY	4.2
K2	HORN RELAY	4.4
K3	DRIVE DISCONNECTION RELAY	2.3
K4	BUZZER AND REVERSE LIGHT RELAY	2.2
K5	START SWITCH RELAY WITH GEAR IN NEUTRAL	1.5
K6	SEAT MICRO SWITCH TIMER	1.4
K7	DIPPED BEAM HEADLIGHTS RELAY	4.2
K8	ANTI-TIPPING OPT. RELAY	3.4
K9	OPTIONAL RELAY	2.2
K10	REVERSE RELAY	2.1
K11	START CONSENT FROM CAB RELAY WITH OPERATOR SITTING	1.4
K12	OPTIONAL RELAY	3.3
K13	SERVICES DISCONNECTION RELAY DURING IGNITION	1.1
K14	OPTIONAL RELAY	2.4
K15	FORWARD GEAR RELAY	2.1
K16	START ANTI-REPEAT CONTROL UNIT	1.4
K17	OPERATIONS ENABLING BUTTONG RELAY	8.1
K18	SAFETY RELAY FROM BASKET	3.2
K19	OPTIONAL RELAY	3.4
K20	OPTIONAL RELAY	4.4

Courtesy of Crane.Market

BASE SYSTEM KEY - DWG. N° E25800-055F

NAME	DESCRIPTION	SHEET
K21	INTERMITTENCE	4.3
K144	Pre-heat relay	1.1
K145	Starting relay	1.1
KT77	Services relay	1.1
KP1	RELAY	3.3
KP2	RELAY	3.3
M106	Fuel pump	2.2
M120	STARTER MOTOR	1.1
M147	Pneumatic seat	7.5
M149	Front windscreen washer	4.4
M150	Rear windscreen washer	3.3
M151	Air conditioning	6.5
MB2	Heating	7.3
M157	Rear windscreen wiper	3.2
MT76	Front windscreen wiper motor	3.4
P165	Instrument	1.2
P196	SAR Calibration connector	8.3
R93	Heat starter	1.2
S29	EXTENSION BUTTON ON KNOB	3.3
S30	MAN PRESENT BUTTON	3.4
S30	MAN PRESENT BUTTON	3.4
S62	JOYSTICK BUTTON	3.4
S148	Seat micro switch	1.3
S167	Manoeuvre enabling button	8.3
S168	TIPPING EXCLUSION SELECTOR	2.4
S169	REAR WINDSCREEN WASHER BUTTON	3.3
S170	REVOLVING LIGHT SWITCH	3.1
S171	FRONT WINDSCREEN SWITCH	3.4
S172	WARNING SWITCH	4.3
S173	Starting control board	1.1
S174	Guide lights switch	4.1
S175	Reverse Guide lights switch	2.2
S178	PTO switch	7.1
S180	Rear hydraulic socket switch	7.2
S181	Boom head solenoid valve switch	7.4
S182	WHEELS ALIGNMENT SWITCH	5.3
S187	Heating switch	7.2
S189	Parking brake switch	2.3
S190	Air conditioner switch	6.4
S191	FRONT WORK LIGHTS SWITCH	6.3
S192	REAR WORK LIGHT SWITCH	6.1
S20O	MANUAL ACCELERATOR SWITCH	2.4
SB1	EXTENSION SOLENOID VALVE	1.1
Y127	Forward gear solenoid valve	1.5
Y136	Reverse gear solenoid valve	2.1
Y137	Elettrovalvola retromarcia	2.2

Courtesy of Crane.Market

https://truckmanualshub.com/

BASE SYSTEM KEY - DWG. N° E25800-055F

NAME	DESCRIPTION	SHEET
Y139	Parking brake solenoid valve	2.3
X193	Trailer socket interface	4.4
X198	Current socket	3.5
X118	DRIVER POSITION INTERFACE CONNECTOR - MAIN	
X119	DRIVER POSITION INTERFACE CONNECTOR - MAIN	
X13	CONTROL UNIT CONNECTOR FUSE AND RELAY	
X14	CONTROL UNIT CONNECTOR FUSE AND RELAY	
X141	DRIVER POSITION INTERFACE CONNECTOR - ENGINE	
X142	DRIVER POSITION INTERFACE CONNECTOR - ENGINE	
X153	DRIVER POSITION INTERFACE CONNECTOR - REAR CAB	
X154	DRIVER POSITION INTERFACE CONNECTOR - UPPER CAB	
X20	CONTROL UNIT CONNECTOR FUSE AND RELAY	
X22	CONTROL UNIT CONNECTOR FUSE AND RELAY	
X26	CONTROL UNIT CONNECTOR FUSE AND RELAY	
203	DIODES CONNECTOR	
X510	BASKET INTERFACE CONNECTOR	
X520	CONDITIONER OPTIONAL CONNECTOR	
X7	CONTROL UNIT CONNECTOR FUSE AND RELAY	
X8	CONTROL UNIT CONNECTOR FUSE AND RELAY	
X99	CONTROL UNIT CONNECTOR FUSE AND RELAY	
A6	Micro Timer Seat	1.2
A16	Start up anti-repeat unit	1.4
B243	Micro boom closed	8.3
H274	Retraction button lamp	8.4
K148	Actuator relay	1.3
K149	General relay	1.4
K205	Retraction relay machine in alarm mode	8.1
R296	Can bus end of line resistance	8.5
R300	Analogue tachometer equipment resistance	1.2
S31	Retraction button on knob	3.3
X242	Diode interface	8.4
X244	Distributor line interface connector	8.5
X299	Basket line interface connector	7.4

Courtesy of Crane.Market

https://truckmanualshub.com/

WIRE COLOURS

A	***SKY BLUE***
B	***WHITE***
C	***ORANGE***
G	***YELLOW***
H	***GREY***
L	***DARK BLUE***
M	***BROWN***
N	***BLACK***
R	***RED***
S	***PINK***
V	***GREEN***
Z	***PURPLE***

NOTE:
WIRES WITH TWO COLOURS ARE INDICATED BY COMBINING THE SYMBOLS ABOVE, FOR EXAMPLE:

G/V - YELLOW/GREEN (HORIZONTAL STRIPES)

Y-G- YELLOW-GREEN (VERTICAL STRIPES)

Courtesy of Crane.Market

https://truckmanualshub.com/

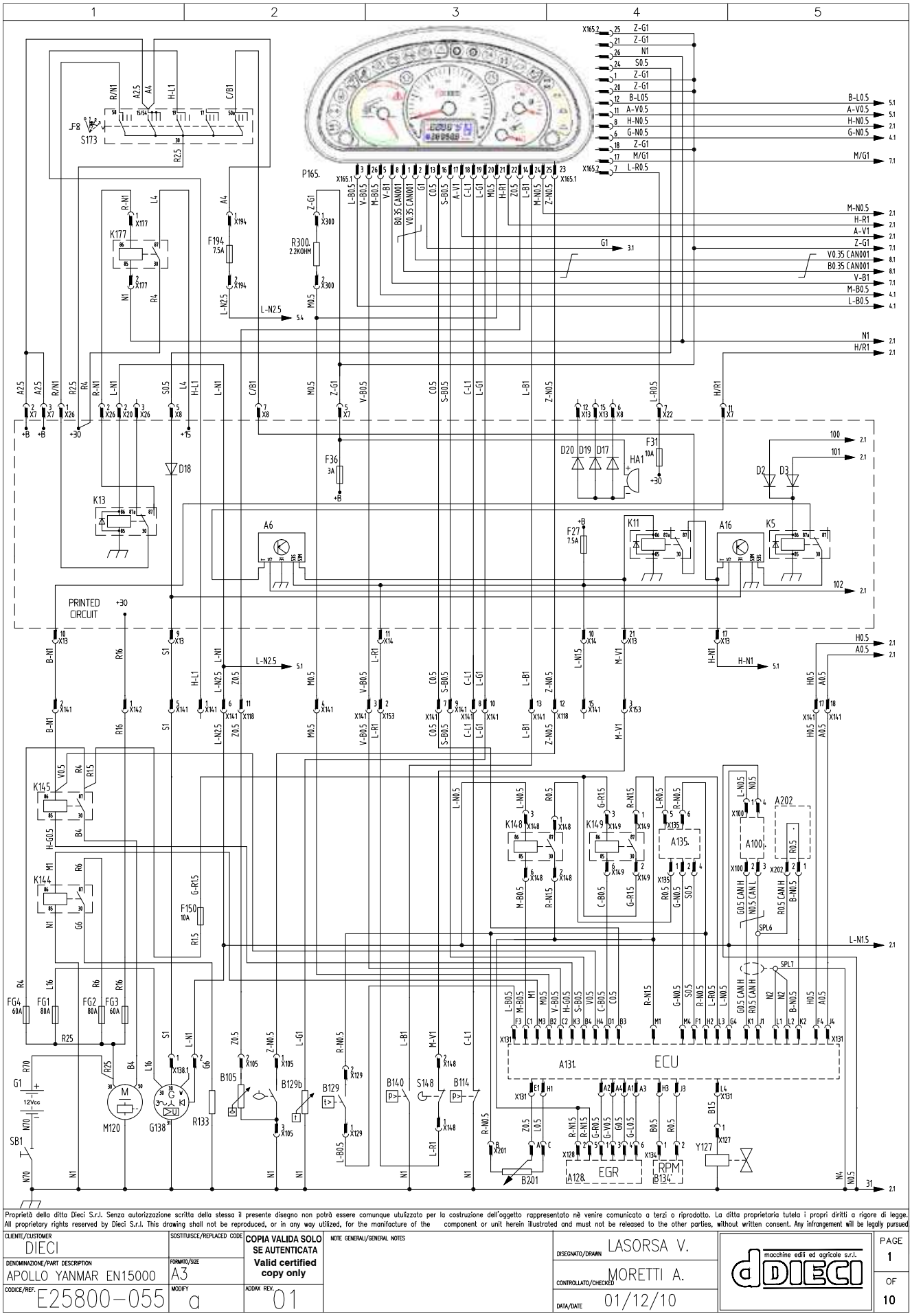

Proprietà della ditta Dieci S.r.l. Senza autorizzazione scritta della stessa il presente disegno non potrà essere comunque utilizzato per la costruzione dell'oggetto rappresentato nè venire comunicato a terzi o riprodotto. La ditta proprietaria tutela i propri diritti a rigore di legge.
All proprietary rights reserved by Dieci S.r.l. This drawing shall not be reproduced, or in any way utilized, for the manifacture of the component or unit herein illustrated and must not be released to the other parties, without written consent. Any infrangement will be legally pursued

CLIENTE/CUSTOMER: DIECI	SOSTITUISCE/REPLACED CODE	COPIA VALIDA SOLO SE AUTENTICATA Valid certified copy only	NOTE GENERALI/GENERAL NOTES	DISEGNATO/DRAWN: LASORSA V.	macchine edili ed agricole s.r.l. dDIECI
DENOMINAZIONE/PART DESCRIPTION: APOLLO YANMAR EN15000	FORMATO/SIZE: A3			CONTROLLATO/CHECKED: MORETTI A.	PAGE 1
CODICE/REF.: E25800-055	MODIFY: a	ADDAX REV.: 01		DATA/DATE: 01/12/10	OF 10

Courtesy of Crane.Market

https://truckmanualshub.com/

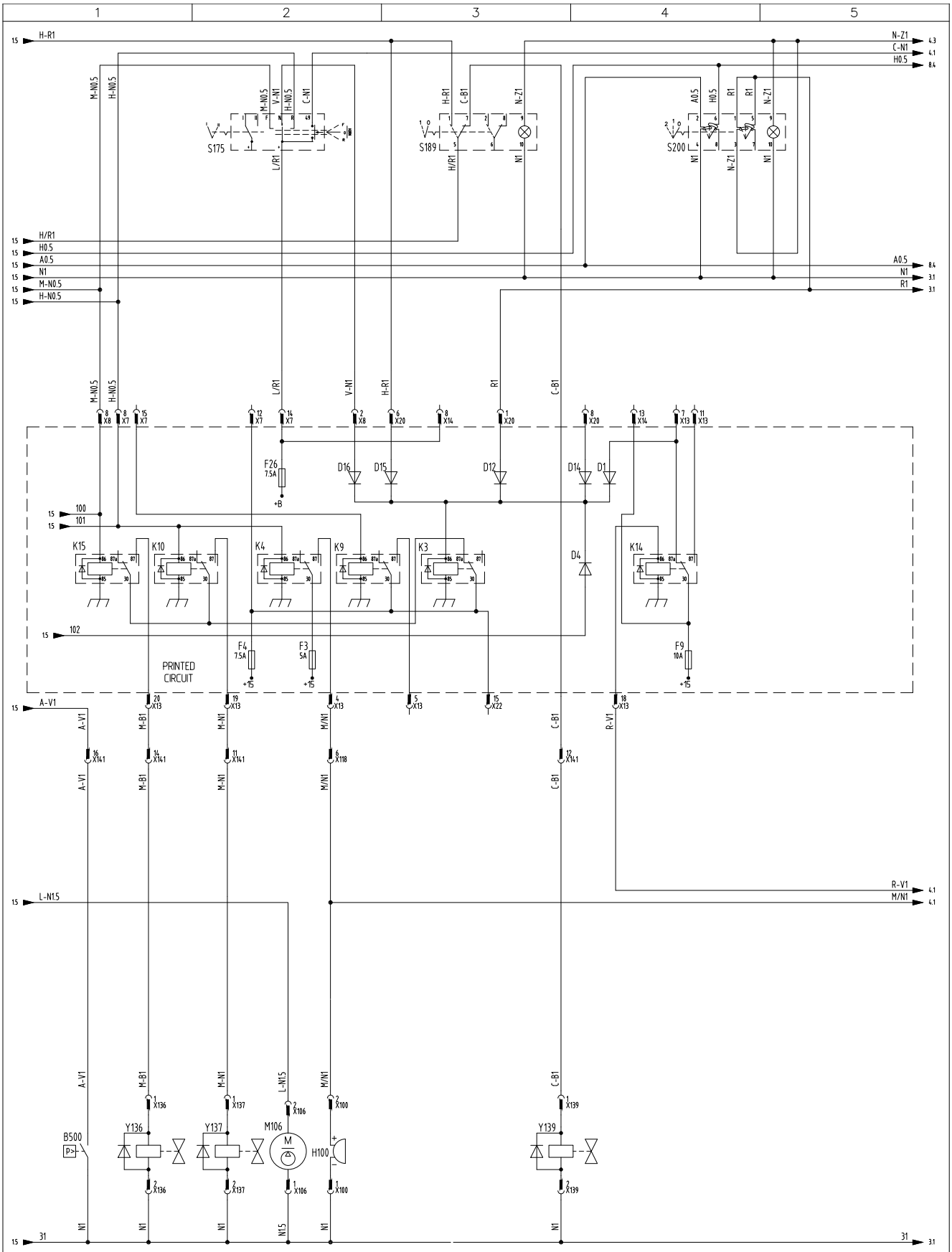

Proprietà della ditta Dieci S.r.l. Senza autorizzazione scritta della stessa il presente disegno non potrà essere comunque utulizzato per la costruzione dell'oggetto rappresentato nè venire comunicato a terzi o riprodotto. La ditta proprietaria tutela i propri diritti a rigore di legge.
All proprietary rights reserved by Dieci S.r.l. This drawing shall not be reproduced, or in any way utilized, for the manifacture of the component or unit herein illustrated and must not be released to the other parties, without written consent. Any infrangement will be legally pursued

CLIENTE/CUSTOMER: DIECI	SOSTITUISCE/REPLACED CODE	COPIA VALIDA SOLO SE AUTENTICATA Valid certified copy only	NOTE GENERALI/GENERAL NOTES	DISEGNATO/DRAWN: LASORSA V.	macchine edili ed agricole s.r.l. dDIECI	PAGE 2
DENOMINAZIONE/PART DESCRIPTION: APOLLO YANMAR EN15000	FORMATO/SIZE: A3			CONTROLLATO/CHECKED: MORETTI A.		OF 10
CODICE/REF.: E25800-055	MODIFY: a	ADDAX REV.: 01		DATA/DATE: 01/12/10		

Courtesy of Crane.Market

https://truckmanualshub.com/

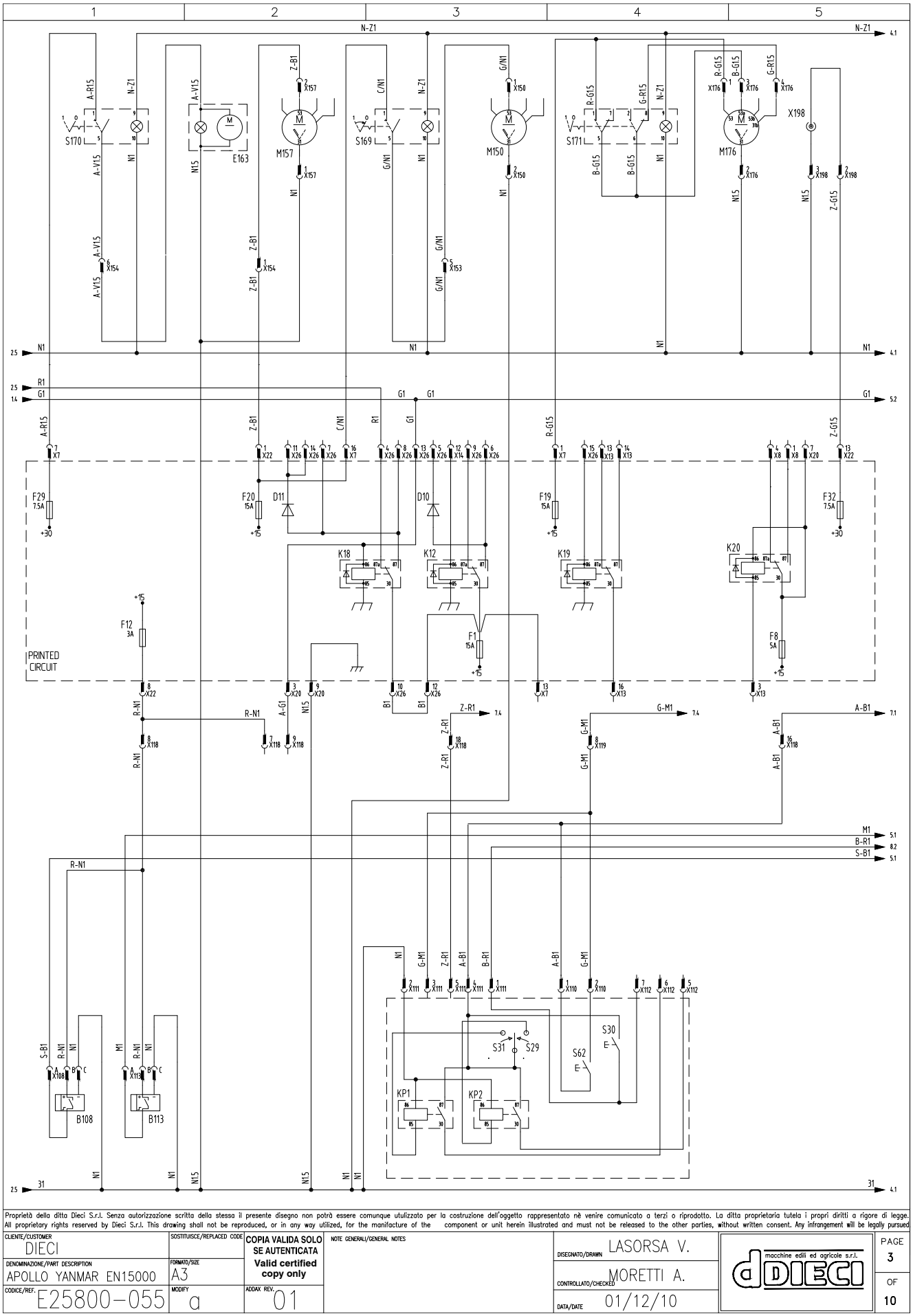

Proprietà della ditta Dieci S.r.l. Senza autorizzazione scritta della stessa il presente disegno non potrà essere comunque utilizzato per la costruzione dell'oggetto rappresentato nè venire comunicato a terzi o riprodotto. La ditta proprietaria tutela i propri diritti a rigore di legge.
All proprietary rights reserved by Dieci S.r.l. This drawing shall not be reproduced, or in any way utilized, for the manifacture of the component or unit herein illustrated and must not be released to the other parties, without written consent. Any infrangement will be legally pursued

CLIENTE/CUSTOMER: DIECI	SOSTITUISCE/REPLACED CODE	COPIA VALIDA SOLO SE AUTENTICATA Valid certified copy only	NOTE GENERALI/GENERAL NOTES	DISEGNATO/DRAWN: LASORSA V.	macchine edili ed agricole s.r.l. dDIECI
DENOMINAZIONE/PART DESCRIPTION: APOLLO YANMAR EN15000	FORMATO/SIZE: A3			CONTROLLATO/CHECKED: MORETTI A.	PAGE 3
CODICE/REF.: E25800-055	MODIFY: a	ADDAX REV.: 01		DATA/DATE: 01/12/10	OF 10

Courtesy of Crane.Market

https://truckmanualshub.com/

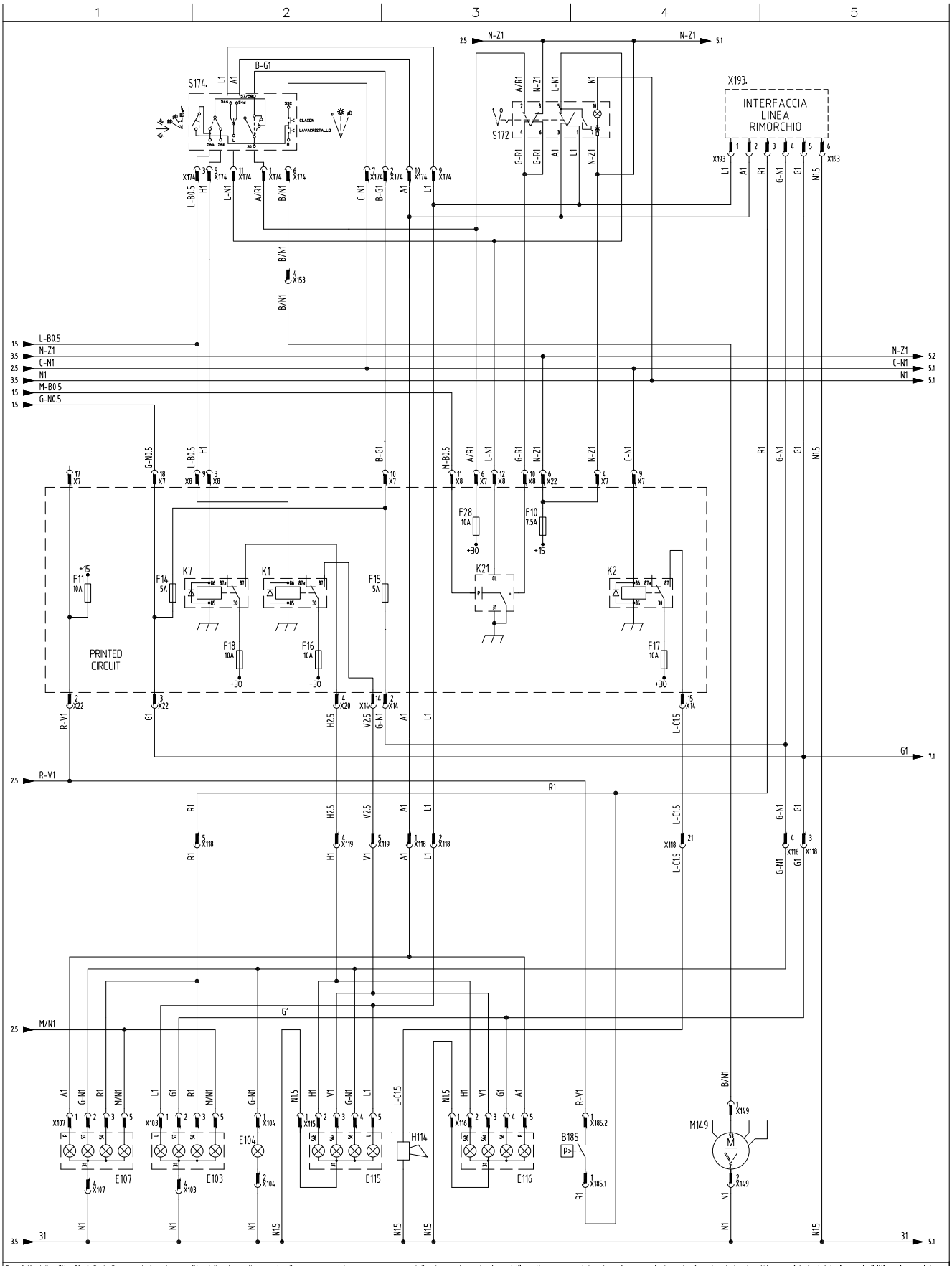

Proprietà della ditta Dieci S.r.l. Senza autorizzazione scritta della stessa il presente disegno non potrà essere comunque utulizzato per la costruzione dell'oggetto rappresentato nè venire comunicato a terzi o riprodotto. La ditta proprietaria tutela i propri diritti a rigore di legge.
All proprietary rights reserved by Dieci S.r.l. This drawing shall not be reproduced, or in any way utilized, for the manifacture of the component or unit herein illustrated and must not be released to the other parties, without written consent. Any infrangement will be legally pursued

CLIENTE/CUSTOMER: DIECI	SOSTITUISCE/REPLACED CODE	COPIA VALIDA SOLO SE AUTENTICATA Valid certified copy only	NOTE GENERALI/GENERAL NOTES	DISEGNATO/DRAWN: LASORSA V.	macchine edili ed agricole s.r.l. dDIECI	PAGE 4
DENOMINAZIONE/PART DESCRIPTION: APOLLO YANMAR EN15000	FORMATO/SIZE: A3			CONTROLLATO/CHECKED: MORETTI A.		OF 10
CODICE/REF.: E25800-055	MODIFY: a	ADDAX REV.: 01		DATA/DATE: 01/12/10		

Courtesy of Crane.Market

https://truckmanualshub.com/

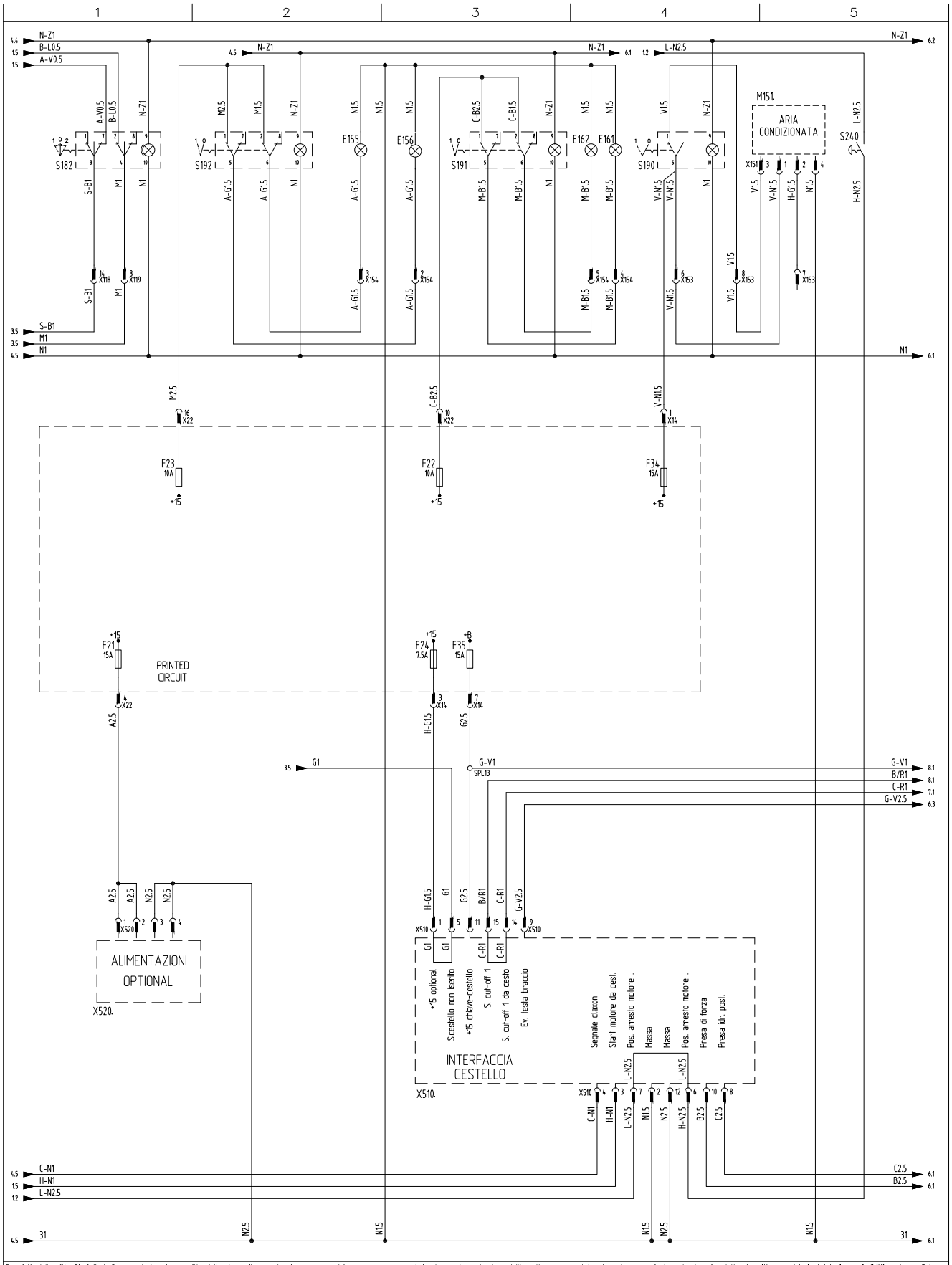

Proprietà della ditta Dieci S.r.l. Senza autorizzazione scritta della stessa il presente disegno non potrà essere comunque utulizzato per la costruzione dell'oggetto rappresentato nè venire comunicato a terzi o riprodotto. La ditta proprietaria tutela i propri diritti a rigore di legge.
All proprietary rights reserved by Dieci S.r.l. This drawing shall not be reproduced, or in any way utilized, for the manifacture of the component or unit herein illustrated and must not be released to the other parties, without written consent. Any infrangement will be legally pursued

CLIENTE/CUSTOMER: DIECI	SOSTITUISCE/REPLACED CODE	COPIA VALIDA SOLO SE AUTENTICATA Valid certified copy only	NOTE GENERALI/GENERAL NOTES	DISEGNATO/DRAWN: LASORSA V.	PAGE 5
DENOMINAZIONE/PART DESCRIPTION: APOLLO YANMAR EN15000	FORMATO/SIZE: A3			CONTROLLATO/CHECKED: MORETTI A.	OF 10
CODICE/REF.: E25800-055	MODIFY: a	ADDAX REV.: 01		DATA/DATE: 01/12/10	

dDIECI macchine edili ed agricole s.r.l.

Courtesy of Crane.Market

https://truckmanualshub.com/

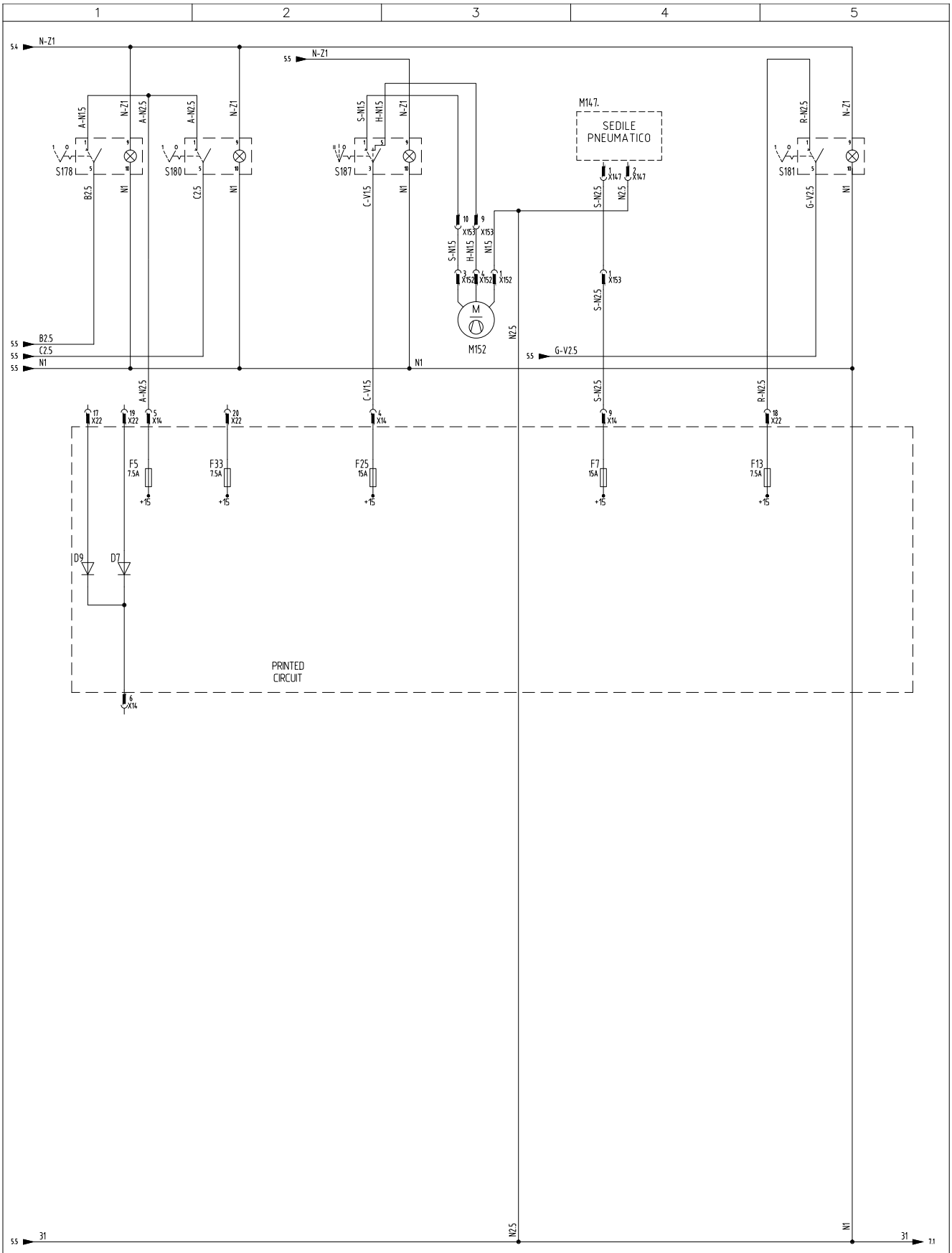

Proprietà della ditta Dieci S.r.l. Senza autorizzazione scritta della stessa il presente disegno non potrà essere comunque utulizzato per la costruzione dell'oggetto rappresentato nè venire comunicato a terzi o riprodotto. La ditta proprietaria tutela i propri diritti a rigore di legge.
All proprietary rights reserved by Dieci S.r.l. This drawing shall not be reproduced, or in any way utilized, for the manifacture of the component or unit herein illustrated and must not be released to the other parties, without written consent. Any infrangement will be legally pursued

CLIENTE/CUSTOMER: DIECI	SOSTITUISCE/REPLACED CODE	COPIA VALIDA SOLO SE AUTENTICATA Valid certified copy only	NOTE GENERALI/GENERAL NOTES	DISEGNATO/DRAWN: LASORSA V.	macchine edili ed agricole s.r.l. dDIECI
DENOMINAZIONE/PART DESCRIPTION: APOLLO YANMAR EN15000	FORMATO/SIZE: A3			CONTROLLATO/CHECKED: MORETTI A.	PAGE 6 OF 10
CODICE/REF.: E25800-055	MODIFY: a	ADDAX REV.: 01		DATA/DATE: 01/12/10	

Courtesy of Crane.Market

https://truckmanualshub.com/

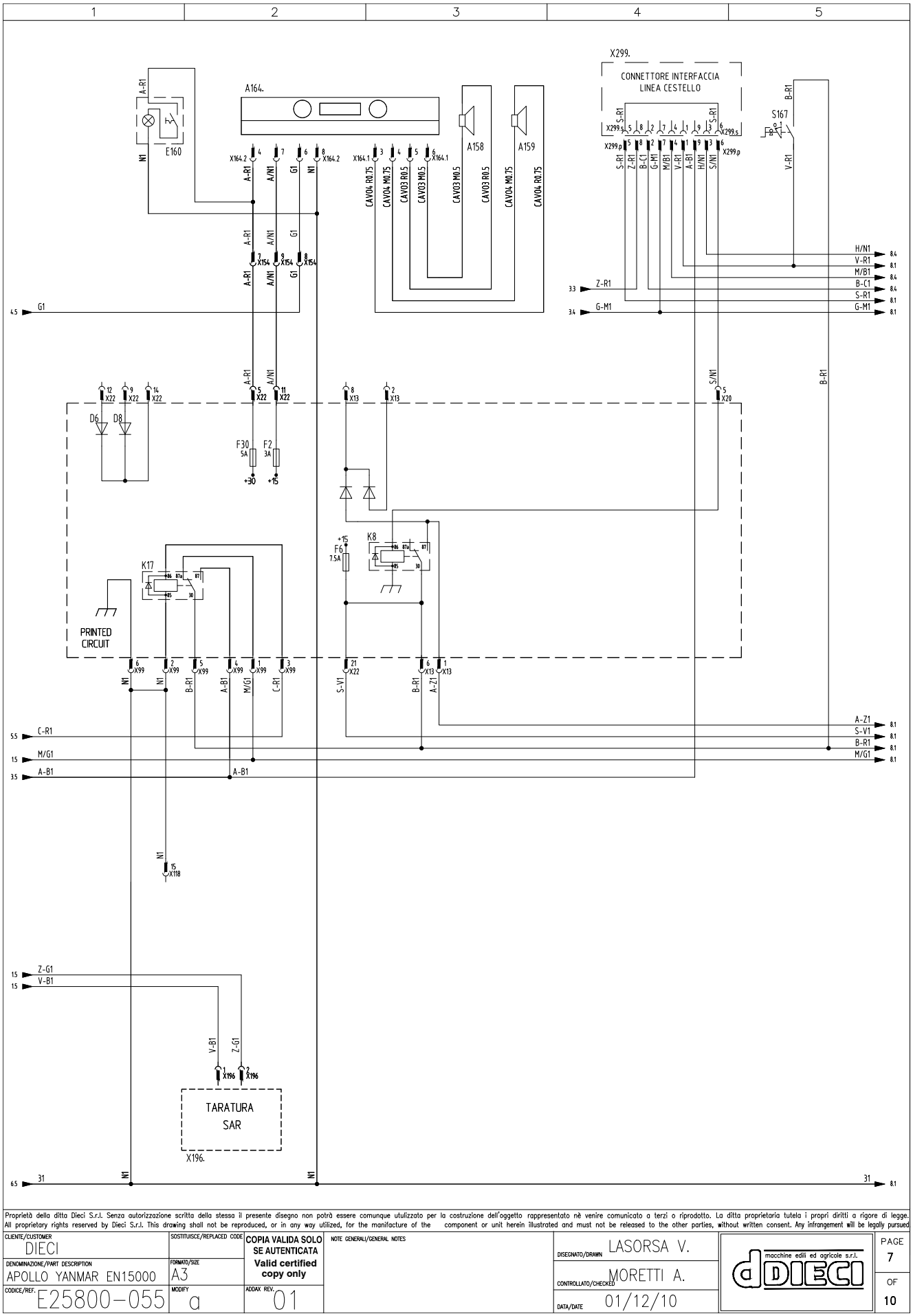

Proprietà della ditta Dieci S.r.l. Senza autorizzazione scritta della stessa il presente disegno non potrà essere comunque utilizzato per la costruzione dell'oggetto rappresentato nè venire comunicato a terzi o riprodotto. La ditta proprietaria tutela i propri diritti a rigore di legge.
All proprietary rights reserved by Dieci S.r.l. This drawing shall not be reproduced, or in any way utilized, for the manifacture of the component or unit herein illustrated and must not be released to the other parties, without written consent. Any infrangement will be legally pursued

CLIENTE/CUSTOMER: DIECI	SOSTITUISCE/REPLACED CODE	COPIA VALIDA SOLO SE AUTENTICATA Valid certified copy only	NOTE GENERALI/GENERAL NOTES	DISEGNATO/DRAWN: LASORSA V.	macchine edili ed agricole s.r.l. dDIECI
DENOMINAZIONE/PART DESCRIPTION: APOLLO YANMAR EN15000	FORMATO/SIZE: A3			CONTROLLATO/CHECKED: MORETTI A.	PAGE 7 OF 10
CODICE/REF.: E25800-055	MODIFY: a	ADDAX REV.: 01		DATA/DATE: 01/12/10	

Courtesy of Crane.Market

https://truckmanualshub.com/

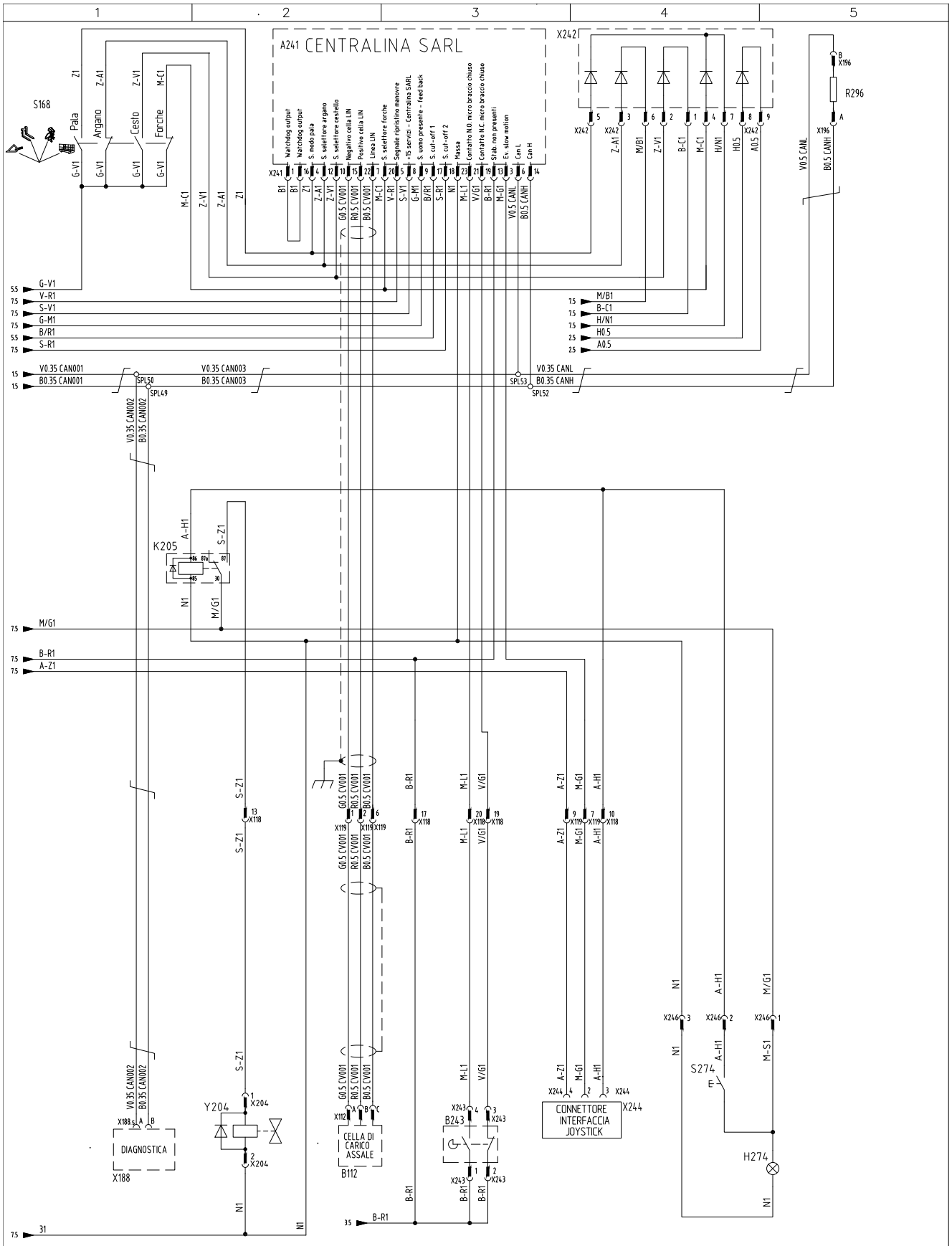

Proprietà della ditta Dieci S.r.l. Senza autorizzazione scritta della stessa il presente disegno non potrà essere comunque utilizzato per la costruzione dell'oggetto rappresentato nè venire comunicato a terzi o riprodotto. La ditta proprietaria tutela i propri diritti a rigore di legge.
All proprietary rights reserved by Dieci S.r.l. This drawing shall not be reproduced, or in any way utilized, for the manifacture of the component or unit herein illustrated and must not be released to the other parties, without written consent. Any infrangement will be legally pursued

CLIENTE/CUSTOMER: DIECI	SOSTITUISCE/REPLACED CODE	COPIA VALIDA SOLO SE AUTENTICATA Valid certified copy only	NOTE GENERALI/GENERAL NOTES	DISEGNATO/DRAWN: LASORSA V.	macchine edili ed agricole s.r.l. dDIECI	PAGE 8
DENOMINAZIONE/PART DESCRIPTION: APOLLO YANMAR EN15000	FORMATO/SIZE: A3			CONTROLLATO/CHECKED: MORETTI A.		OF 10
CODICE/REF.: E25800-055	MODIFY: a	ADDAX REV.: 01		DATA/DATE: 01/12/10		

Courtesy of Crane.Market

https://truckmanualshub.com/

Courtesy of Crane.Market

https://truckmanualshub.com/

HYDRAULIC CIRCUIT

F

- ATTENTION: - Read the SAFETY REGULATIONS (contained in this manual) carefully for the safety of all personnel and your vehicle.

Courtesy of Crane.Market

https://truckmanualshub.com/

macchine edili ed agricole

DIECI

- ATTENTION: - Read the SAFETY REGULATIONS (contained in this manual) carefully for the safety of all personnel and your vehicle.

Courtesy of Crane.Market

EVERY MODIFICATION MADE TO THE VEHICLE LEADS TO A NEW VERIFICATION OF CONFORMITY WITH THE 2006/42 MACHINERY DIRECTIVE "CE" THIS PROCEDURE IS ALSO VALID IN THE CASE OF REPAIRS WITH NON-ORIGINAL SPARE PARTS.

IT IS PROHIBITED TO OPERATE IF THIS MANUAL HAS NOT BEEN READ AND UNDERSTOOD.

ANY ARBITRARY MODIFICATION MADE TO THE VEHICLE WILL ABSOLVE DIECI FROM ALL LIABILITY FOR DAMAGE OR INJURY RESULTING FROM SUCH MODIFICATION.

TO GUARANTEE YOUR SAFETY AND THAT OF OTHERS, DO NOT MODIFY THE STRUCTURE OR ADJUST THE VARIOUS VEHICLE COMPONENTS (HYDRAULIC PRESSURE, CALIBRATION OF LOAD LIMITERS, ENGINE ROTATION, ASSEMBLY OF ADDITIONAL ATTACHMENTS, ETC.). THE SAME HOLDS TRUE FOR THE DEACTIVATION OR MODIFICATION OF SAFETY SYSTEMS. IN SUCH CASES, THE MANUFACTURER SHALL BE ABSOLVED FROM ALL LIABILITY.

THE IMAGES, DESCRIPTIONS, MEASUREMENTS STATED IN THIS CHAPTER REFER TO STANDARD VEHICLES.

YOUR VEHICLE CAN BE SET-UP WITH OPTIONAL CONTROLS AND ACCESSORIES ON REQUEST.

ALL FUNCTIONS AND PROCEDURES CONCERNING THE OPERATION AND MOUNTING OF THE VEHICLE'S ATTACHMENTS THAT ARE NOT DESCRIBED IN THIS MANUAL ARE STRICTLY FORBIDDEN.

USE OF THE VEHICLE DIFFERENT TO THAT DESCRIBED IN THIS MANUAL IS PROHIBITED.

IT IS MANDATORY TO HAVE READ AND LEARNED CHAPTER "B" (SAFETY STANDARDS) BEFORE READING CHAPTER "C" AND USING THE VEHICLE.

macchine edili ed agricole dDIECI

- ATTENTION: - Read the SAFETY REGULATIONS (contained in this manual) carefully for the safety of all personnel and your vehicle.

Courtesy of Crane.Market

https://truckmanualshub.com/

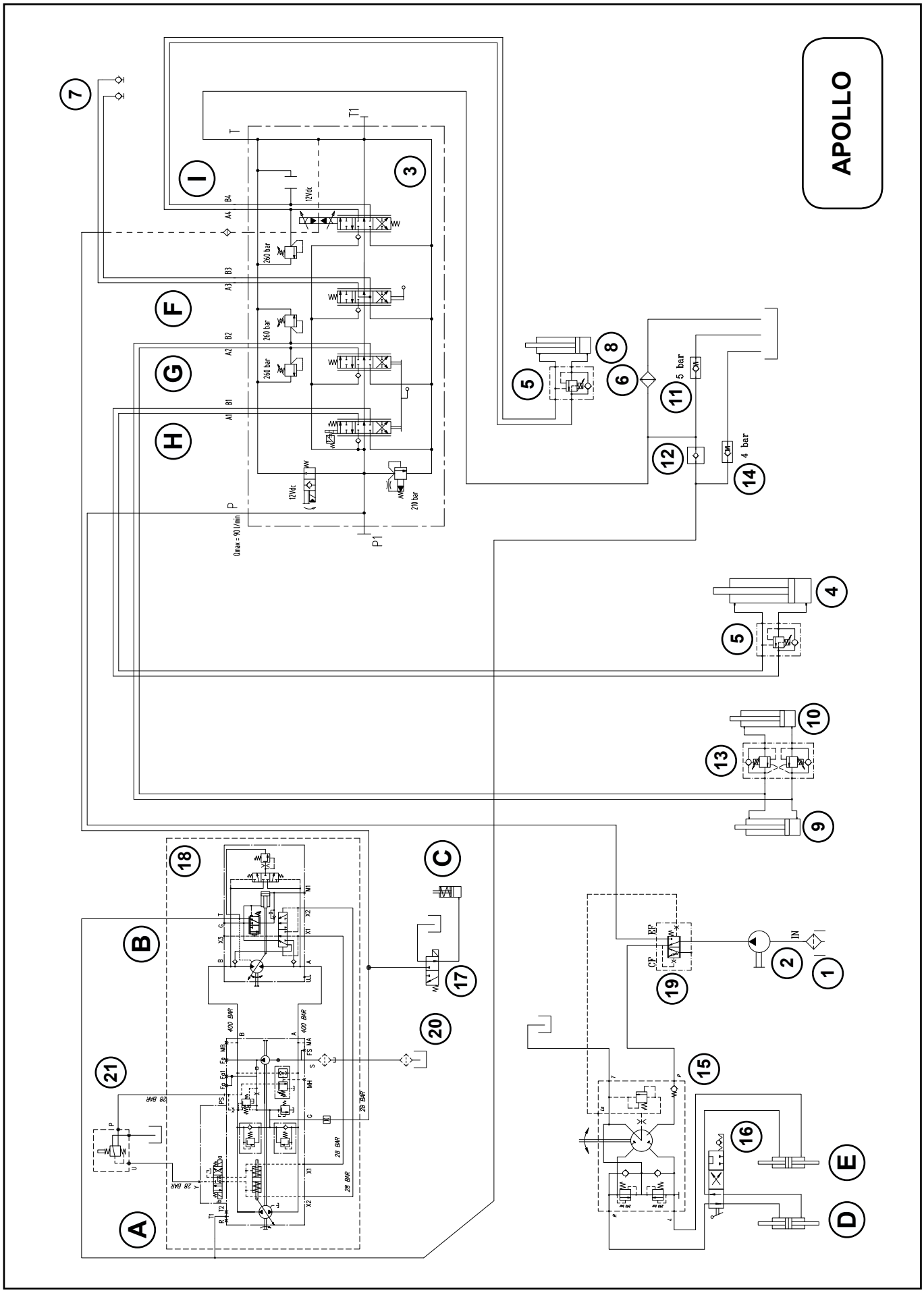

- ATTENTION: - Read the SAFETY REGULATIONS (contained in this manual) carefully for the safety of all personnel and your vehicle.

Courtesy of Crane.Market

https://truckmanualshub.com/

HYDRAULIC PLANT KEY

APOLLO

1. Oil tank
2. Pump
3. Distributor
4. Boom raising cylinder
5. Simple effect lock valve
6. Heat exchanger
7. Quick couplings
8. Internal extensoin cylinder
9. Compensation cylinder
10. Swivel cylinder
11. One-way valve
12. Unidirectional valve
13. Double effect lock valve
14. One-way valve
15. Power steering
16. Steering selection valve
17. Negative brake engagement valve
18. Hydrostatic drive
19. Priority valve
20. Oil filter
21. Inching valve

A - PUMP
B - ENGINE
C - NEGATIVE BRAKE
D - FRONT STEERING
E - REAR STEERING
F - ACCESSORY
G - SWIVEL
H - LIFTING
I - INTERNAL EXTENSION

- ATTENTION: - Read the SAFETY REGULATIONS (contained in this manual) carefully for the safety of all personnel and your vehicle.

Courtesy of Crane.Market

https://truckmanualshub.com/

- ATTENTION: - Read the SAFETY REGULATIONS (contained in this manual) carefully for the safety of all personnel and your vehicle.

Courtesy of Crane.Market

https://truckmanualshub.com/

TECHNICAL DATA
AND
TECHNICAL FEATURES

G

Courtesy of Crane.Market

https://truckmanualshub.com/

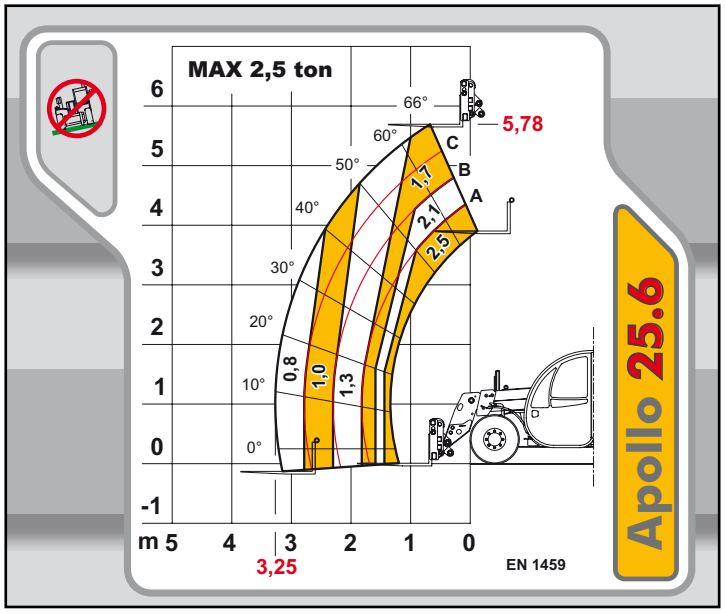

DIMENSIONS	25.6
A/A*	270/310*
B	983
C	2350
D	763
E/E*	3530/3580*
F	4100
G	860
H/H*	1950/1990*
I	1500
L	1800
M	4500
N	1400
O	3400

Measurements expressed in millimetres

A* - E* - H* = Measurements referring to optional wheels

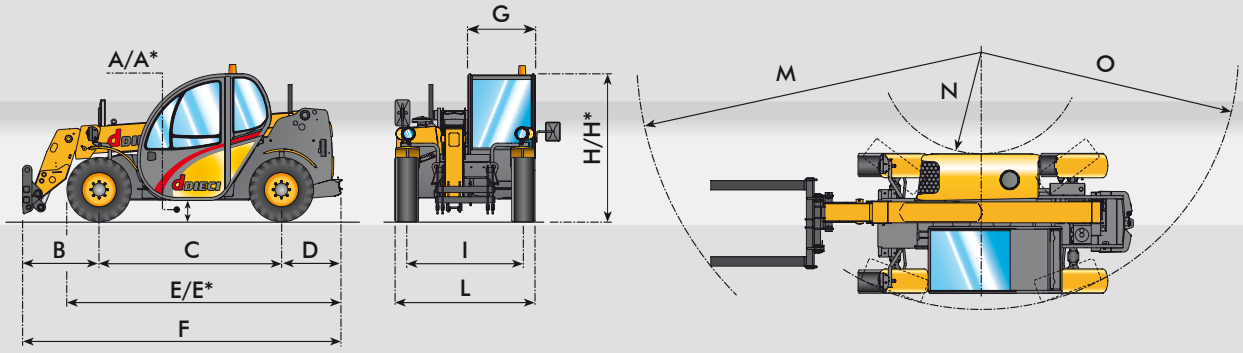

A* - E* - H* = Measurements referring to optional wheels

Courtesy of Crane.Market

https://truckmanualshub.com/

PERFORMANCE

	25.6
Maximum capacity (kg)	2.500
Maximum lifting height (m)	5,78
Maximum horizontal outreach (m)	3,25
Outreach at maximum height (m)	0,67
Fork swivelling angle	129°
Pull-out force (daN)	5.700
Towing force (daN)	4.400
Maximum climb angle	40%
Total weight empty (kg)	4.800
Max speed (km/h)	26 *

* = 18" tyres

ENGINE

	Yanmar 50.7 Kw	Yanmar 62.5 Kw
Model:	YANMAR	YANMAR
Maximum power kW (hp):	50,7 (69)	62,5 (85)
Revolutions per minute (rpm):	2500	2500
Operation:	4 stroke diesel	
Injection:	Electronic direct	
Number and arrangement of cylinders:	4, vertical in line	
Engine size (cm3):	3319	3319
Specific consumption at 2500 rpm (g/kWh):	248	254

Natural Intake | Turbo compressor

Liquid cooling system

BOOM

	25.6
Times: *(in seconds)*	
Lifting	7,8
Descent	4,1
Extension	6,1
Retraction	3,4
Forward swivelling	3,5
Reverse swivelling	2,2

Patented compensation system

DEVICES AS PER STANDARD

Anti-tipping device with pejorative movement block.

Hydraulic socket for any accessories on the boom head.

Soundproof closed cab, ROPS-FOPS approved, with heater.

Self-blocking front axle differential (limited slip 45%).

OPTIONALS AND ACCESSORIES

A/C; Webasto Heater; Digital speedometer; Water Heater; Driver's seat with pneumatic suspension; Light on boom head; Quick coupling for accessories; Radio; Anti-theft system; Glass protection.

(For additional customizations, contact the area dealer)

HYDRAULIC PLANT

Gear pump with capacity at max. speed (lt/1'):	80
Max operational pressure (bar):	230
Distributor control with joystick:	3 in 1

DIFFERENTIAL AXLES

Steering axles: 2, with planetary reduction gears

Steering types: 4 wheels / transversal / 2 wheels

Front axle: rigid

Back axle: oscillating

Oil bath service braking on the front axle

Negative action parking brake.

TRANSMISSION

Hydrostatic transmission with variable displacement pump.

Hydrostatic engine with automatic variation.

Electrical - hydraulic inversion.

Inching pedal for controlled advancement.

REFUELLING *(Litres)*

Hydraulic plant (total)	70
Fuel tank	80

TYRES

Tyres	12 - 16.5"
Alternative	12.0/75 - 18"

Courtesy of Crane.Market

https://truckmanualshub.com/

Courtesy of Crane.Market

https://truckmanualshub.com/

Courtesy of Crane.Market

https://truckmanualshub.com/

Servizio **A**ssistenza **T**ecnica - Via E. Majorana, 2-4 - 42027 Montecchio Emilia (RE) ITALY
Tel. +39 0522 869611 - Fax **S.A.T.** +39 0522 869744
www.dieci.com - *E-mail: service@dieci.com*

Courtesy of Crane.Market