https://truckmanualshub.com/

PREFACE

1. This Parts Catalog is the 1st edition of Yanmar crawler backhoe Vio75 for Europe.

Pub.No. : 000Y00S4030
Published : Jan., 2002

2. Model name

	Column	Model name	M/#	Manufactured
Ⅰ(Vehicle)	(A)	Vio75	00502～	2002/1～
Ⅱ(Engine)	(A)	4TNE98-EBVA	15645～	2001/12～

3. Your understanding is asking that this parts catalog is not a technical data manual setting forth as servicing procedures, This parts catalog is using simplified illustration.
Be sure to use Yanmar Genuine Parts in your maintenance servicing of Yanmar products.
Be careful not to use the simple parts available in the market, otherwise their use in repairing causes such as an early breakage, for instance.

How to read this Parts Catalog.

1.Parts mentioned in Parts Catalog may not necessarily be standard equipping parts
2.Parts change may be made without prior notice.
3.Form of this Parts Catalog.

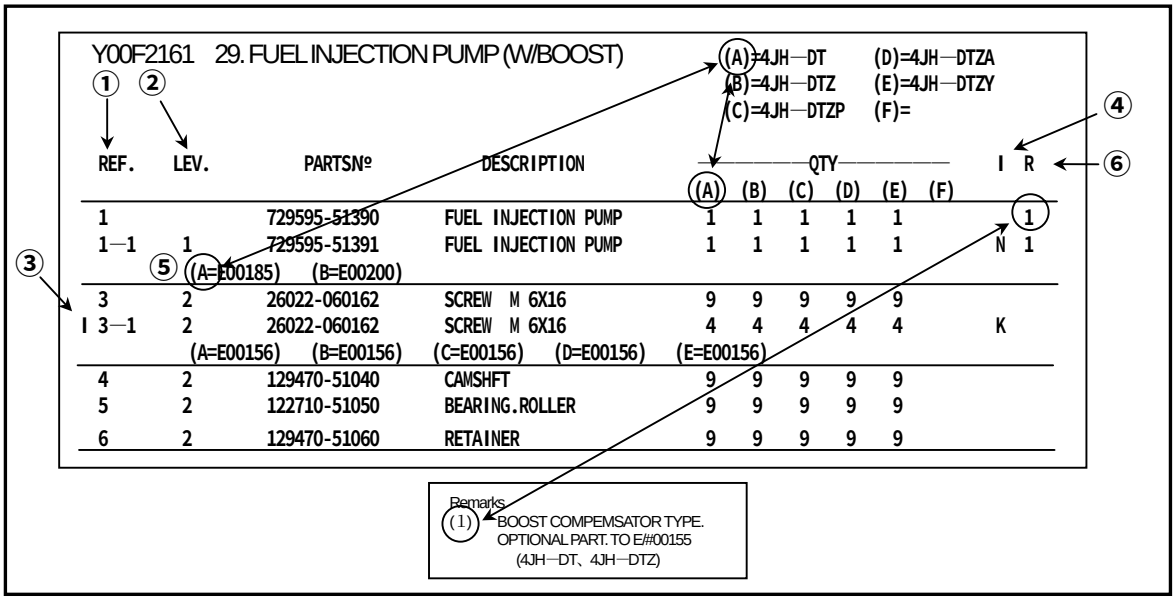

①Ref. No,

The Ref. No, in the list may not be in accordance with the Ref. No, on illustration.

(Ex.) illustration No, List heed No,

1 1 (Before change) → 1 1 (After change)

When interchangeable symbol N, and k, illustrations for the new parts are sometimes omitted.

②Lev. (Level)

Indication and Meaning of Level

Level Hereunder is given the relation among the number of number (1,2,3) the level and the nominal parent-child relationship.

1 ----- Parent parts (Assembly parts)
2 ----- Child parts included in " 1 " (Semi-Assembly parts, component parts of Assembly parts.)
3 ----- Child parts included in " 2 ", Grand-child parts in terms of " 1 ".
(Component parts of Semi-Assembly parts.)

Note) A parts of non-sale parts are illustrated but not listed.

③Change Mark

Change Mark " I " is given to the part for which a design change was made at this time.
The design change was not shown in the last published Parts Catalog.

④Interchangeability Mark

In the case where a part change took place, one of the following interchangeability marks is indicated for that part

Symbol	Interchangeability	Contents note
N	Old ○→ ×← New	New Part is interchangeable for Old Part but not interchangeable conversely.
Q	Old ×→ ○← New	New Part is not interchangeable for Old Part but interchangeable conversely.
R	Old ○→ ○← New	New Part is interchangeable for Old Part and vice versa.
S	Old ×→ ×← New	New Part is not interchangeable for Old Part and vice versa.
W		Part newly added.
Z		Part discontinued.
F		Not interchangeable single part but interchangeable by set of the related parts.
K		Changed only in quantity used.

⑤Effective Machine No,

When a part is changed, Effective Machine No, of a Model for which the part is applicable is indication
In each column of (A)-(F).

Product Symbol	Product No,	Product Symbol	Product No,
C	Clutch No, Compressor No,	M	Machine No,
D	Drive No,	T	Tractor No,
E	Engine No,	Note 1)※	Date

Note 1) Date may follow the symbol in some cases.(Ex.) ※1996.01
Note 2) As far as engine models shown by " XXX " are concerned, the modification of the parts could not be Predicted or the engine models themselves could not be identified.
Note 3) (A=E/#00185) means that the design change on the part has been effective for the model at the, column (A) (in the case, for 4JH-DT) on and from E/#(Engine Serial Number) 00185

⑥Remarks Mark

Figures or alphabets (Symbols) are entered in the remark column.
The comments (remarks) on the pertinent parts are indicated in the lower part of the list by the same symbols a those stated above.

1 [VEHICLE PAINTED COLOR]

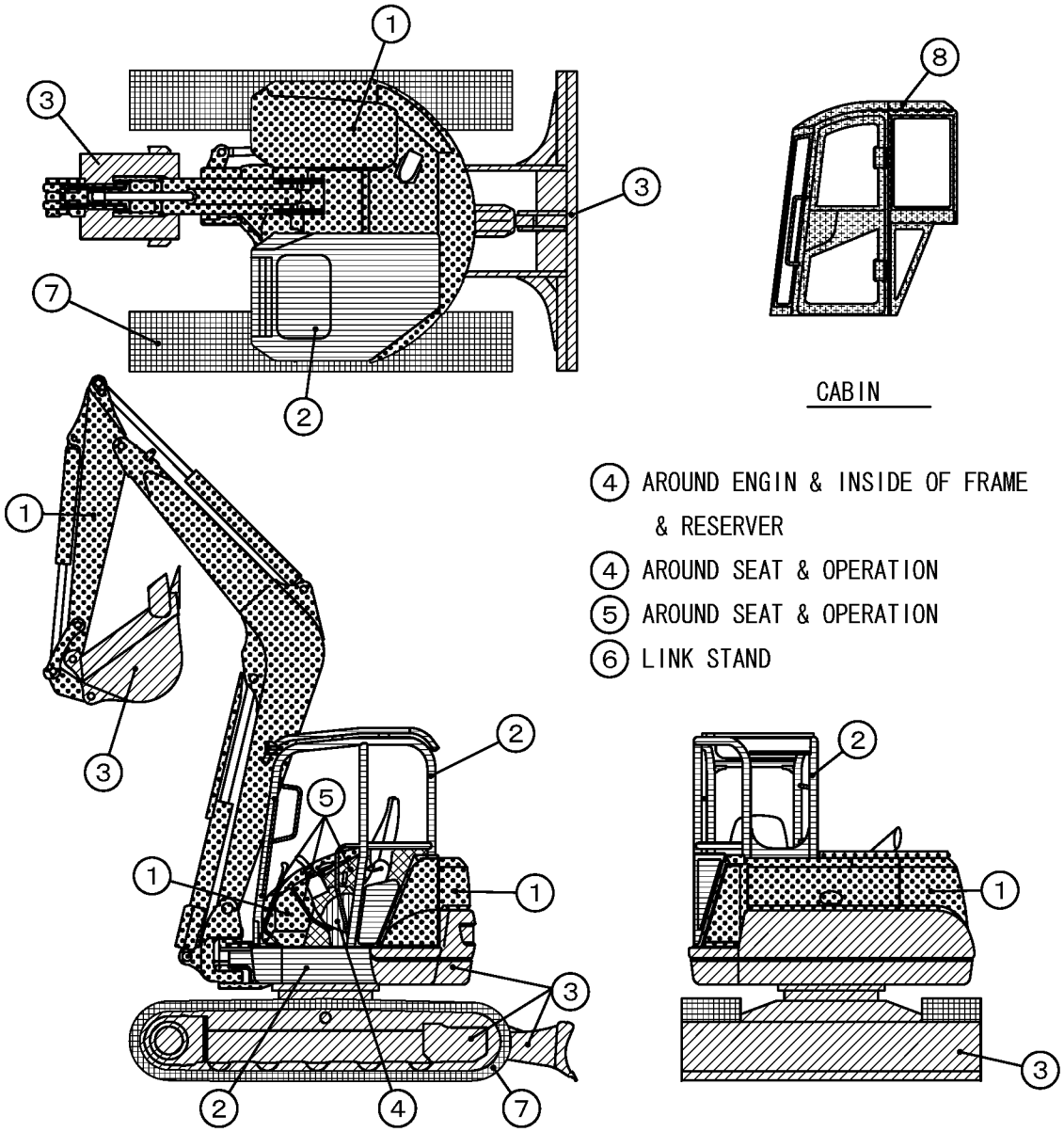

Part	Desc-ription	Painted Color	Munsel No.	Color Code
①		YANMAR New Permanent Yelloew	5.15YB8.45/10.81	87
②		YANMAR New Grayish Green	2.62BG4.76/2.87	86
③		YANMAR Deep Green	6.39BG2.13/1.73	82
④		YANMAR Warm Gray	5.52Y4.91/1.09	73
⑤		YANMAR Dark Olive Gray	7.21Y2.92/0.79	72
⑥		YANMAR Black	4.90PB0.08/0.41	12
⑦		YANMAR Charcoal Gray	N-1.80	71
⑧		YANMAR Grayish Green	2.15G4.87/1.52	83

https://truckmanualshub.com/

2 [PAINT PART NO.]

Part	Paint Color	Paint Part No.		
		16L Can	4L Can	SPRAY
①	YANMAR New Permanent Yellow	981101-09519	977620-40870	977620-30871
②	YANMAR New Grayish Green	981101-09616	977620-40861	977620-30861
③	YANMAR New Deep Green	981101-09517	977620-40820	-------
④	YANMAR Warm Gray	-------	-------	TOR-90450003
⑤	YANMAR Dark Olive Gray	-------	977620-40720	TOR-90460003
⑥	YANMAR Black	-------	TOR-91220001	TOR-90220003
⑦	YANMAR Charcoal Gray	981101-09516	977620-40710	977620-30371
⑧	YANMAR Grayish Green	981101-09615	977620-40830	977620-30N41

3 [COLOR OF MAIN PARTS]

Part	Paint Color	Main Parts
①	YANMAR New Permanent Yellow	hood fuel tank operation machine part
②	YANMAR New Grayish Green	turning frame part
③	YANMAR New Deep Green	driving frame part blade
④	YANMAR Warm Gray	operation part engine related frame interior parts
⑤	YANMAR Dark Olive Gray	canopy operation part
⑥	YANMAR Black	link stand
⑦	YANMAR Charcoal Gray	track shoe
⑧	YANMAR Grayish Green	cabin

https://truckmanualshub.com/

WIRING DIAGRAM

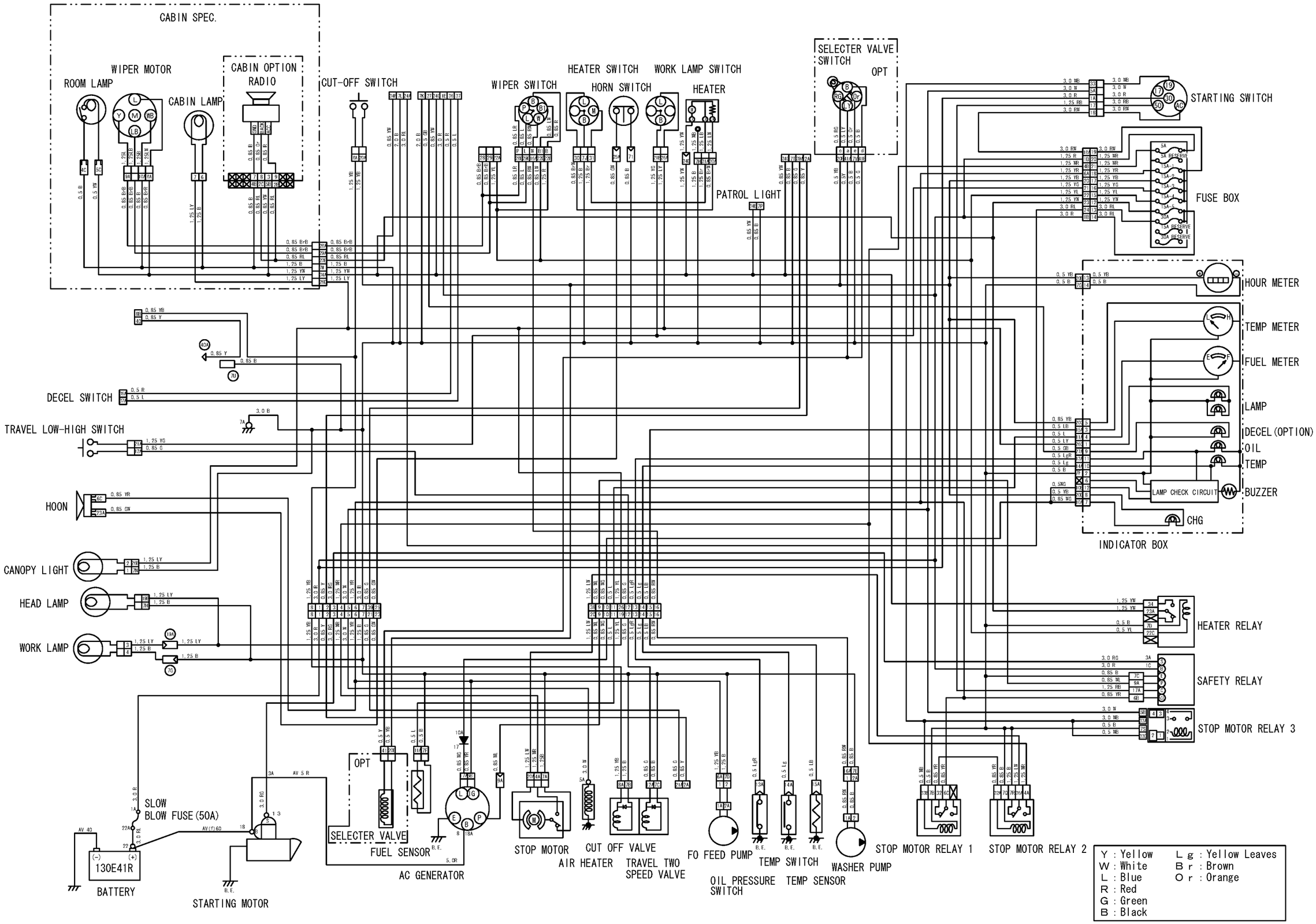

https://truckmanualshub.com/

PICTURESQUE INDEX(1) ・・・MAIN PARTS

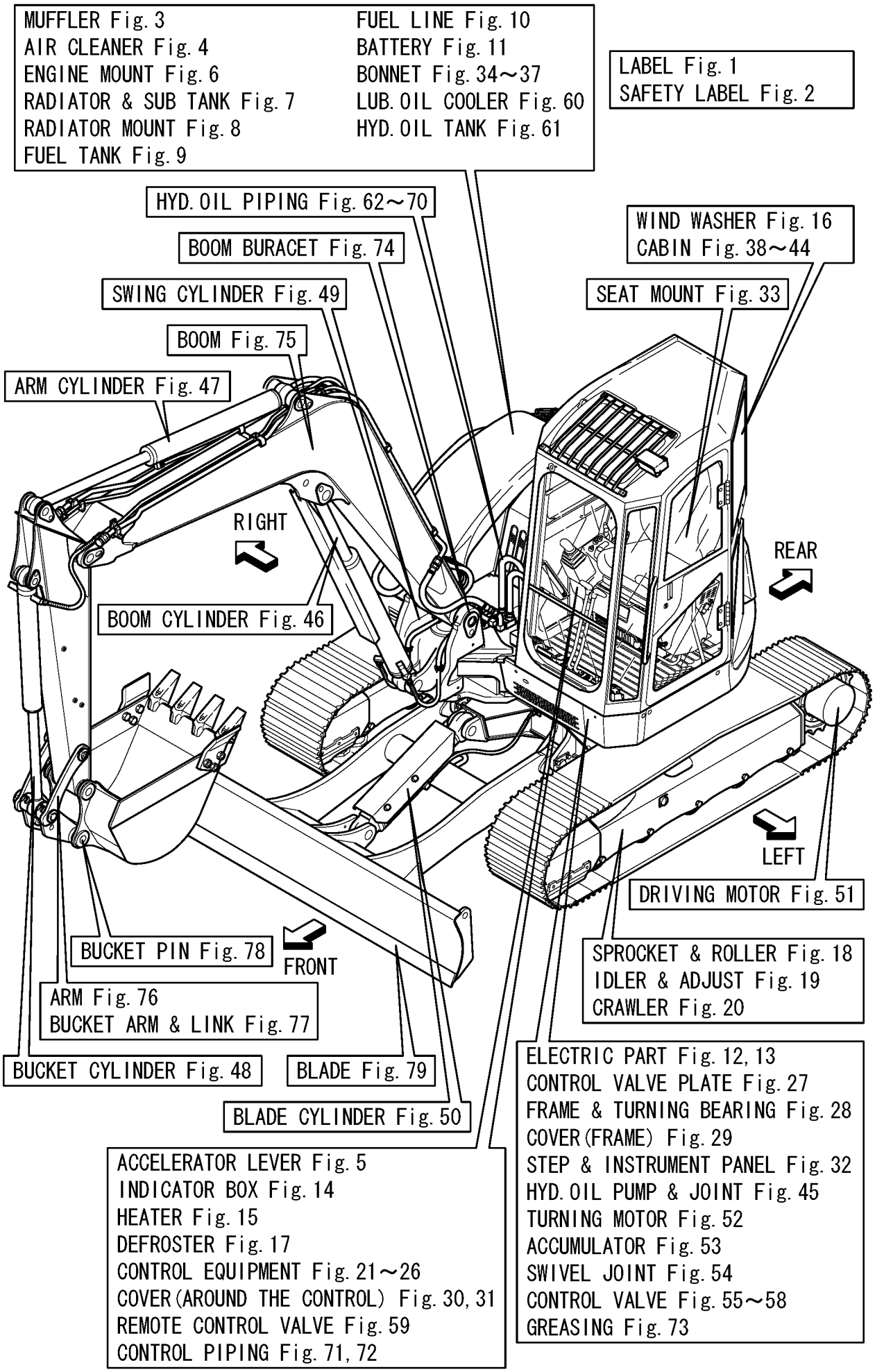

https://truckmanualshub.com/

PICTURESQUE INDEX(2) ・・・HYDRAULIC SECTION

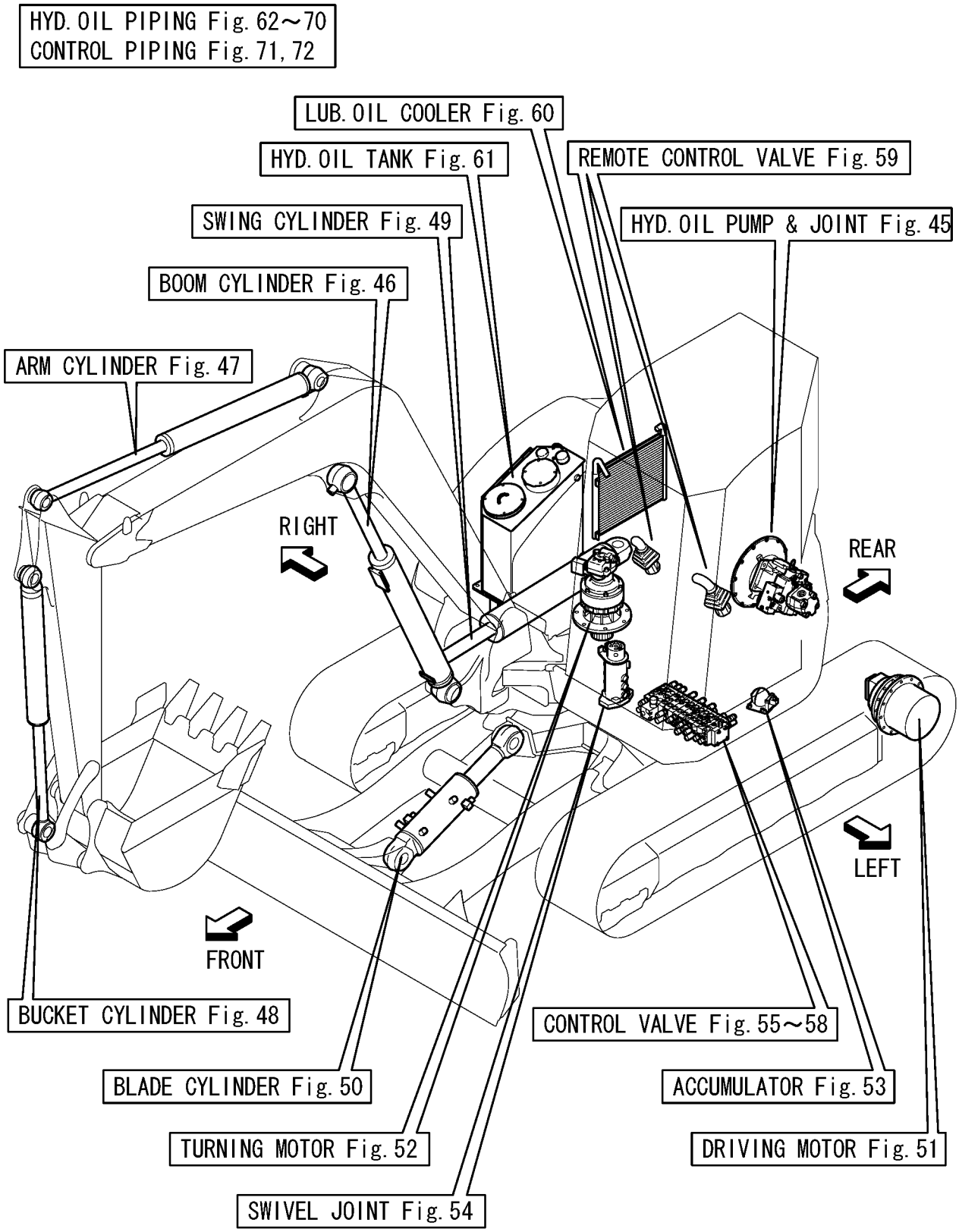

https://truckmanualshub.com/

PICTURESQUE INDEX(3) ・・・FIGURE

Fig. 1 LABEL

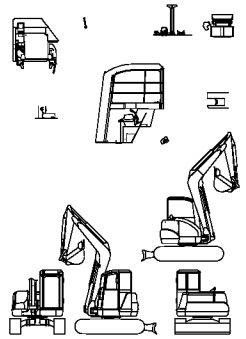

Fig. 2 SAFETY LABEL

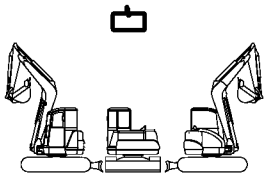

Fig. 3 MUFFLER

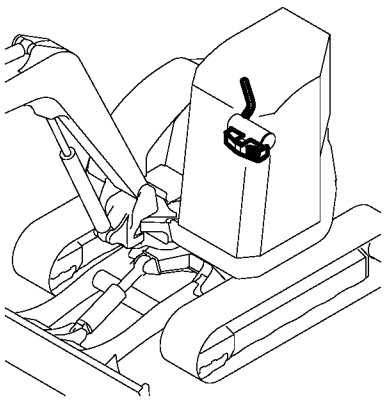

Fig. 4 AIR CLEANER

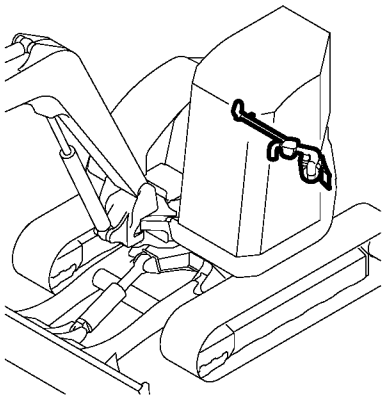

Fig. 5 ACCELERATOR LEVER

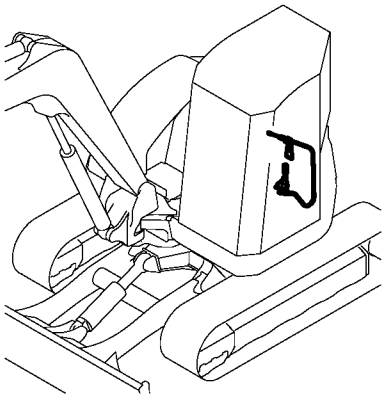

Fig. 6 ENGINE MOUNT

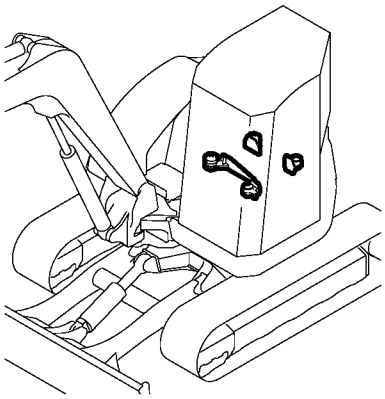

Fig. 7 RADIATOR & SUB-TANK

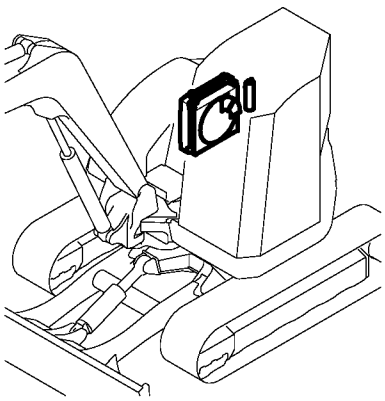

Fig. 8 RADIATOR MOUNT

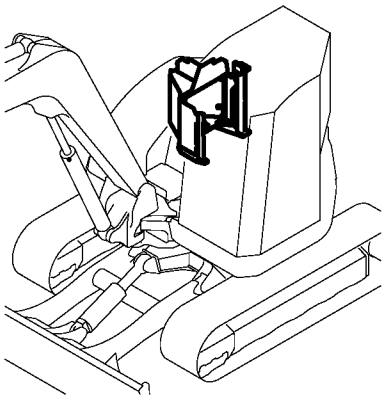

Fig. 9 FUEL TANK

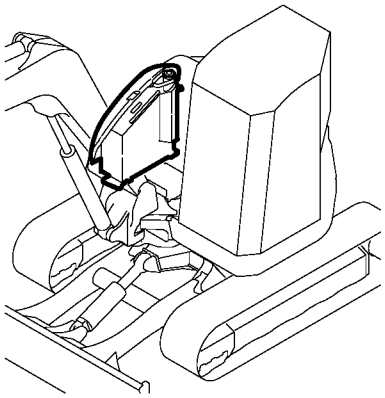

Fig. 10 FUEL LINE

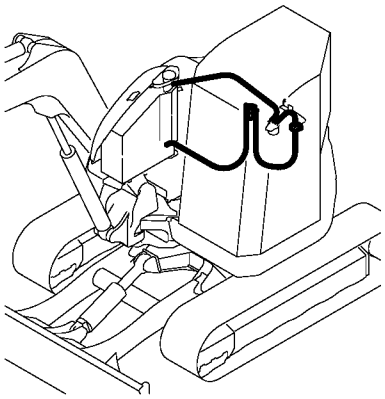

Fig. 11 BATTERY

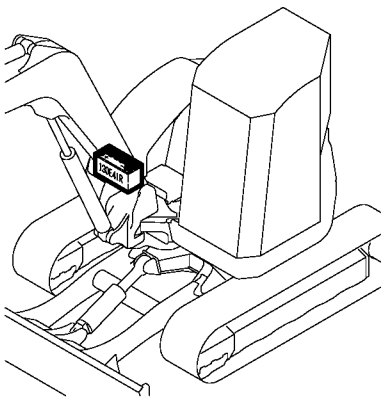

Fig. 12 ELECTRIC PART(WIRING)

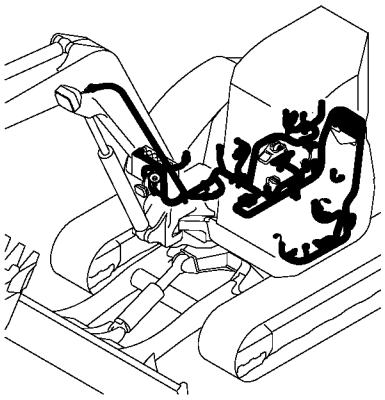

https://truckmanualshub.com/

PICTURESQUE INDEX(3) ・・・FIGURE

Fig. 13 ELECTRIC PART(EQUIPMENT)

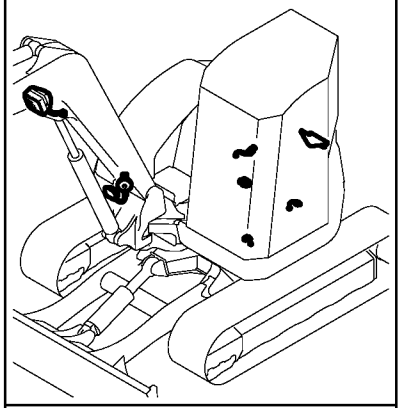

Fig. 14 INDICATOR BOX

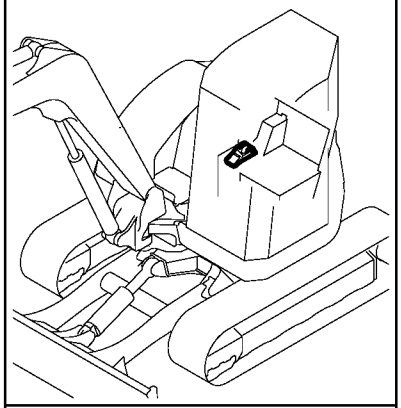

Fig. 15 HEATER

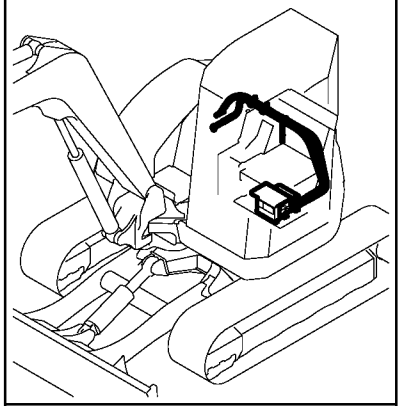

Fig. 16 WIND WASHER

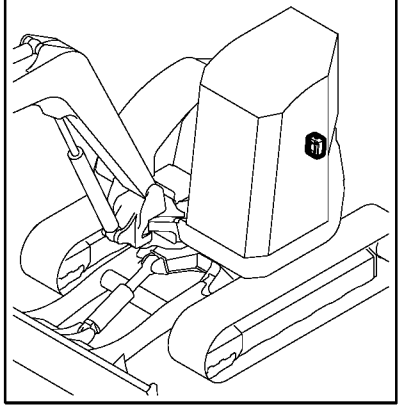

Fig. 17 DEFROSTER

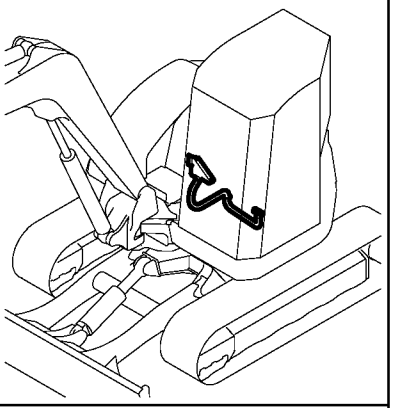

Fig. 18 SPROCKET & ROLLER

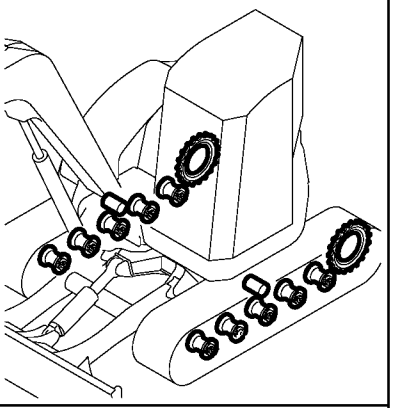

Fig. 19 IDLER & ADJUST

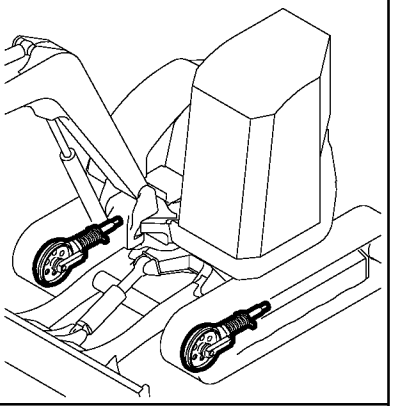

Fig. 20 CRAWLER

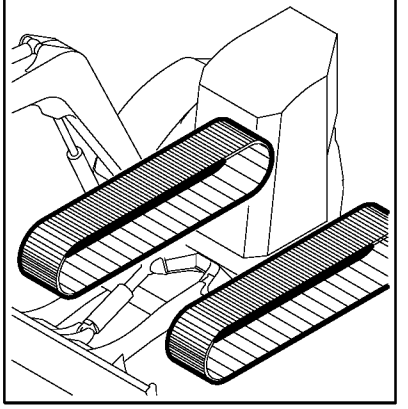

Fig. 21 CONTROL EQUIPMENT (LOCK LEVER & STAND)

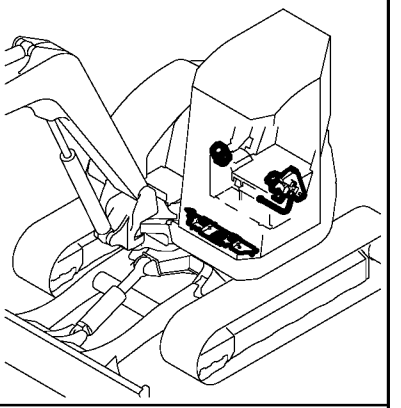

Fig. 22 CONTROL EQUIPMENT(DRIVE)

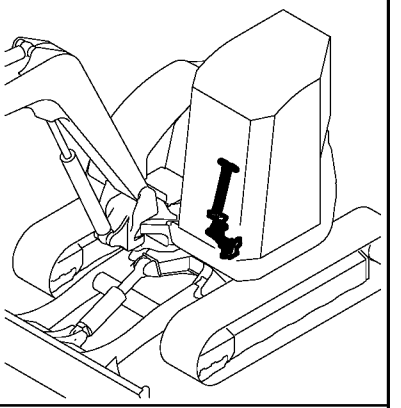

Fig. 23 CONTROL EQUIPMENT(BLADE)

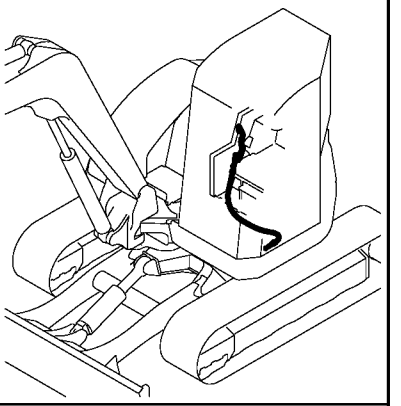

Fig. 24 CONTROL EQUIPMENT(SWING)

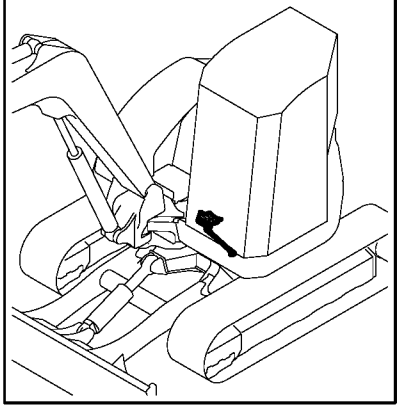

https://truckmanualshub.com/

PICTURESQUE INDEX(3) ・・・FIGURE

Fig. 25 CONTROL EQUIPMENT (LOW-HIGH PEDAL)

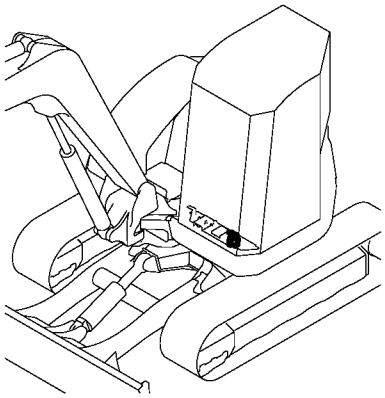

Fig. 26 CONTROL EQUIPMENT (P.T.O.)

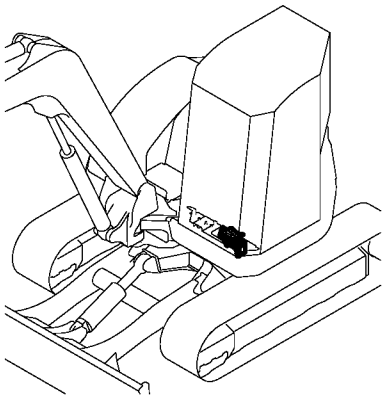

Fig. 27 CONTROL VALVE PLATE

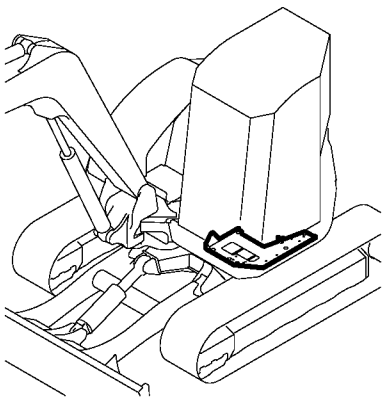

Fig. 28 FRAME & TURNING BEARING

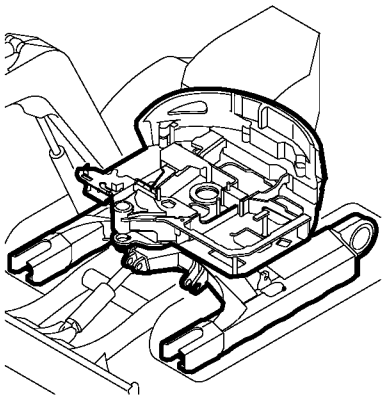

Fig. 29 COVER(FRAME)

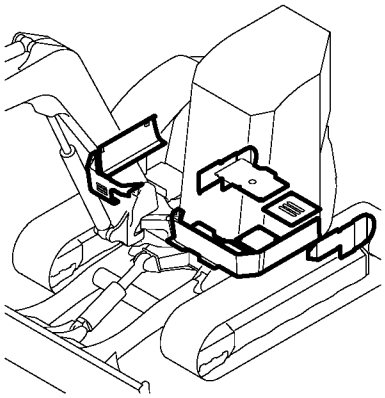

Fig. 30 COVER (AROUND THE CONTROL:1)

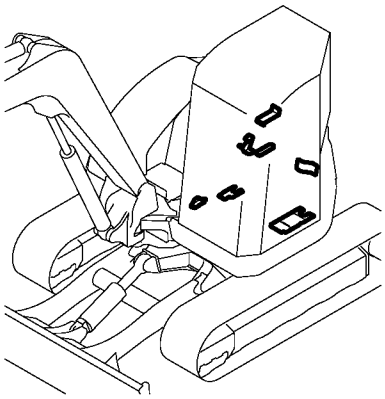

Fig. 31 COVER (AROUND THE CONTROL:2)

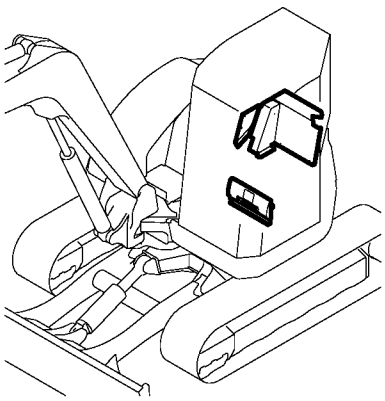

Fig. 32 STEP & INSTRUMENT PANEL

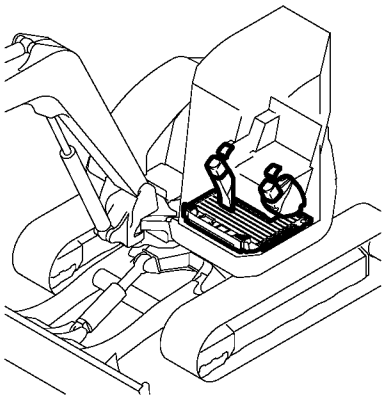

Fig. 33 SEAT MOUNT

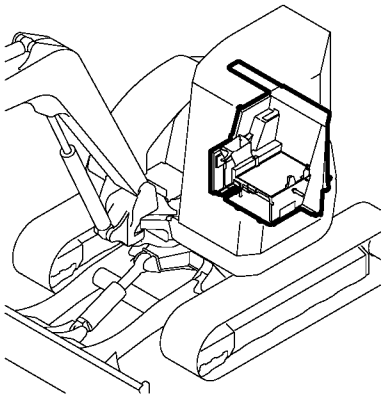

Fig. 34 BONNET(BODY)

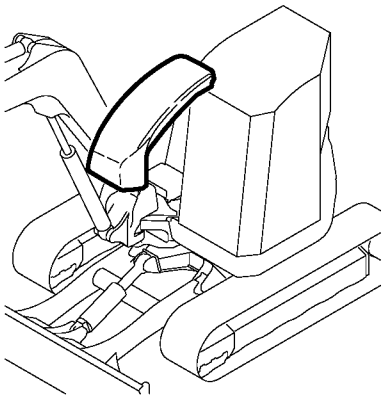

Fig. 35 BONNET(UPPER COVER)

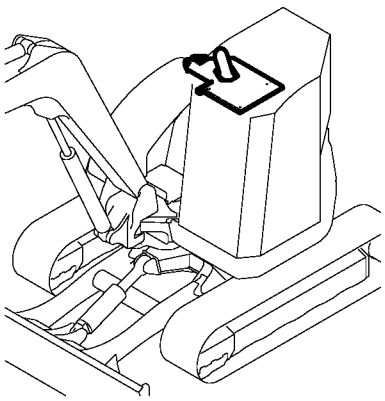

Fig. 36 BONNET (SIDE & REAR COVER)

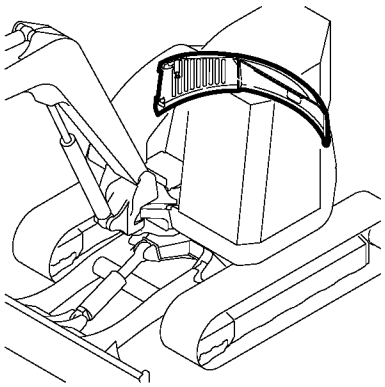

https://truckmanualshub.com/

PICTURESQUE INDEX(3) ・・・FIGURE

Fig. 37 BONNET(FRONT)

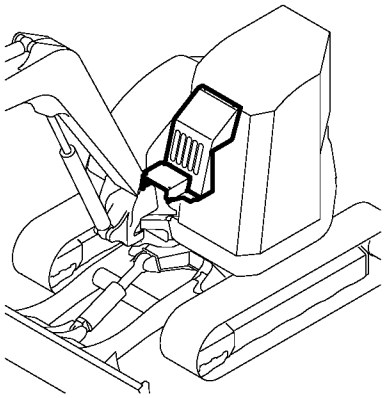

Fig. 38 CABIN(BODY)

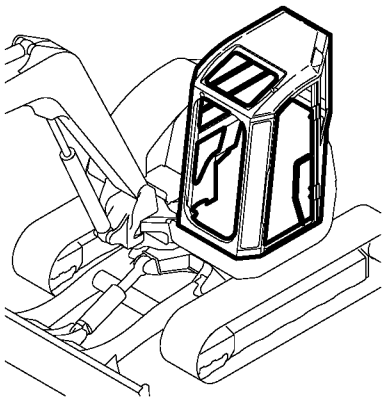

Fig. 39 CABIN(EXTERIOR)

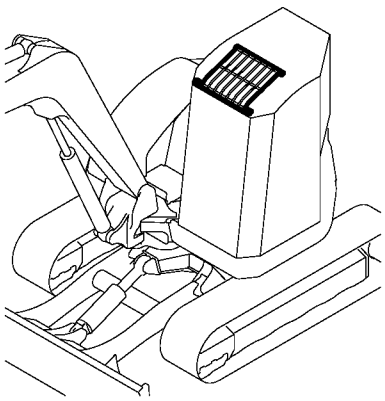

Fig. 40 CABIN(ROOF PAD)

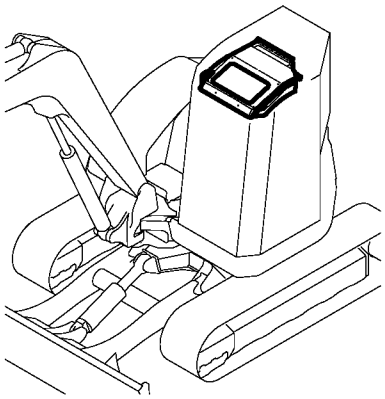

Fig. 41 CABIN(WINDOW)

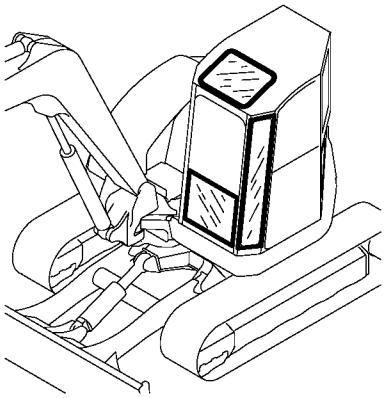

Fig. 42 CABIN(ELECTRIC)

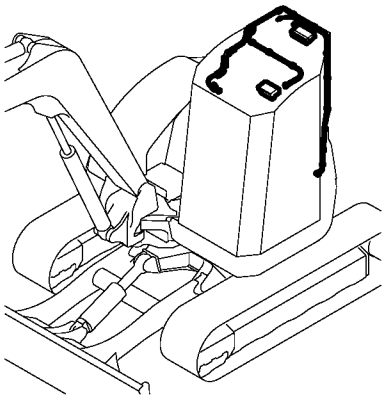

Fig. 43 CABIN(DOOR)

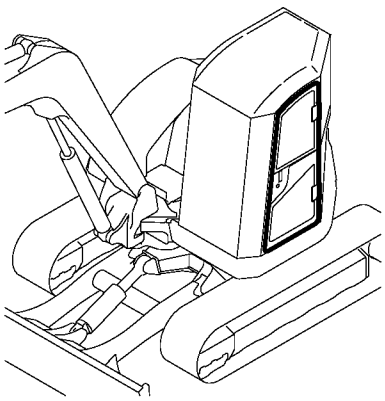

Fig. 44 CABIN(FRONT WINDOW)

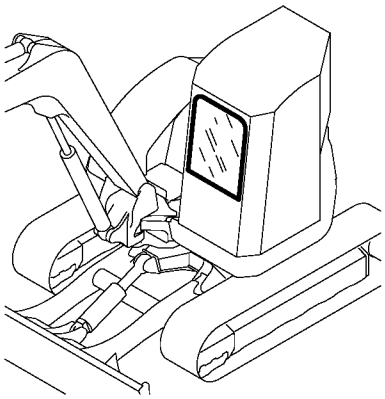

Fig. 45 HYD.OIL PUMP & JOINT

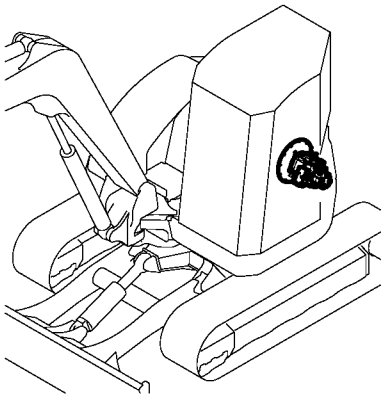

Fig. 46 BOOM CYLINDER

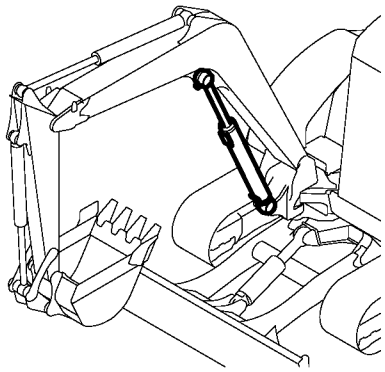

Fig. 47 ARM CYLINDER

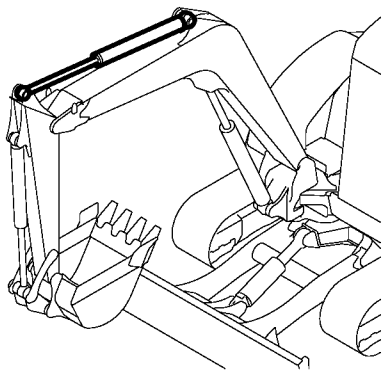

Fig. 48 BUCKET CYLINDER

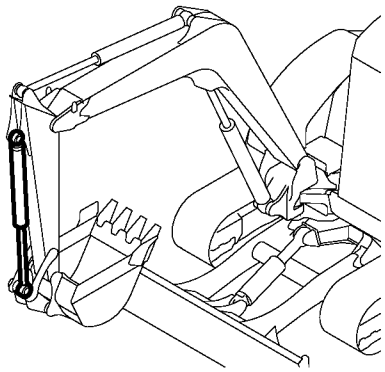

https://truckmanualshub.com/

PICTURESQUE INDEX(3) ・・・FIGURE

Fig. 49 SWING CYLINDER

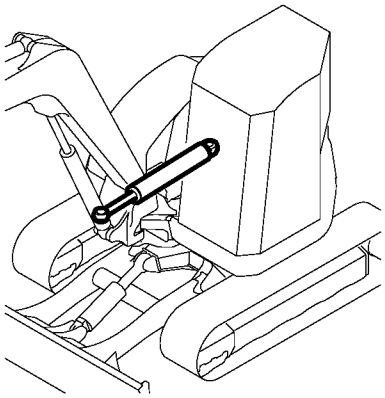

Fig. 50 BLADE CYLINDER

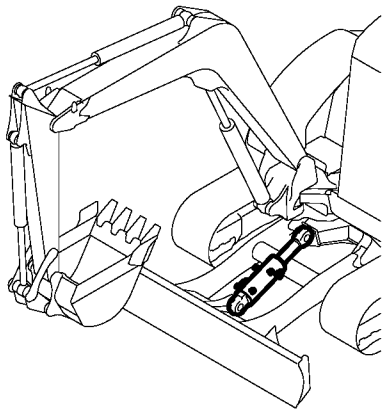

Fig. 51 DRIVING MOTOR

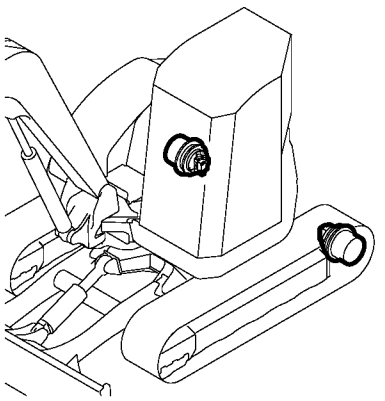

Fig. 52 TURNING MOTOR

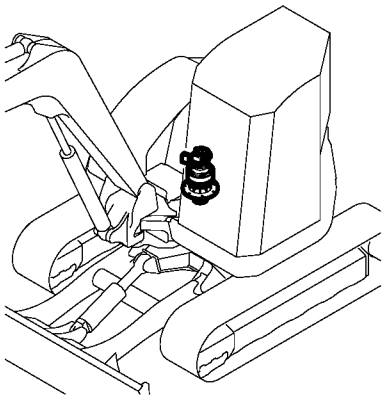

Fig. 53 ACCUMULATOR

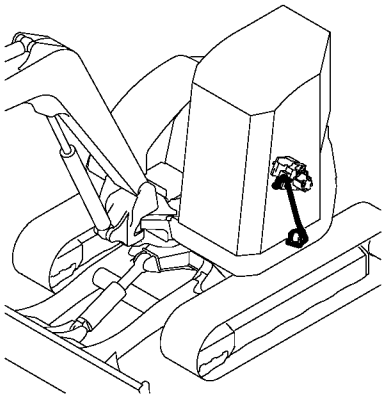

Fig. 54 SWIVEL JOINT

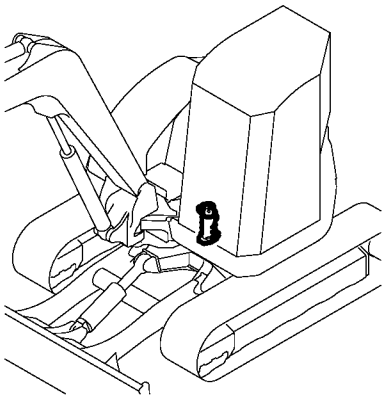

Fig. 55 CONTROL VALVE(1/4)

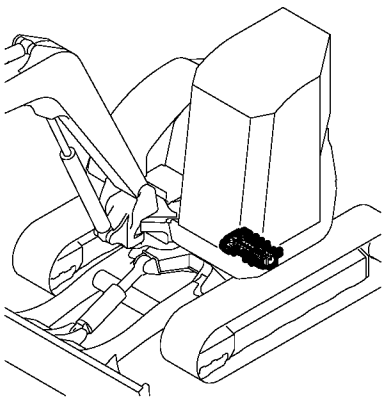

Fig. 56 CONTROL VALVE(2/4)

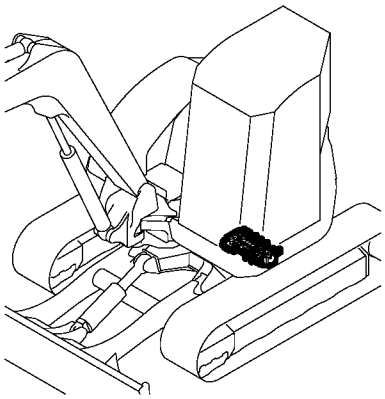

Fig. 57 CONTROL VALVE(3/4)

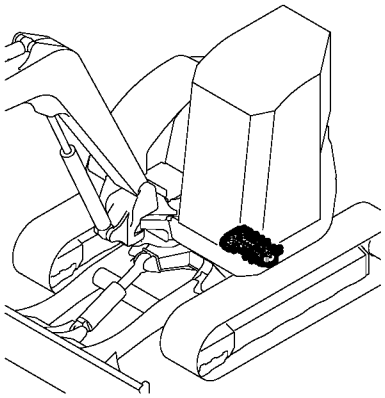

Fig. 58 CONTROL VALVE(4/4)

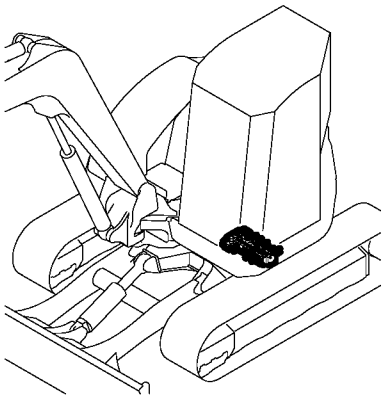

Fig. 59 REMOTE CONTROL VALVE

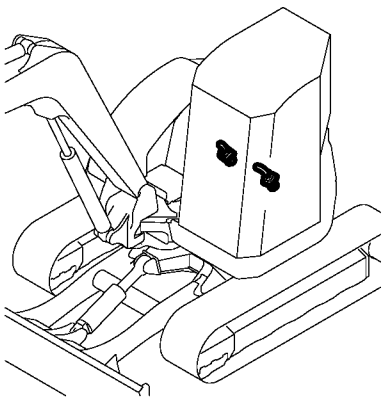

Fig. 60 LUB.OIL COOLER

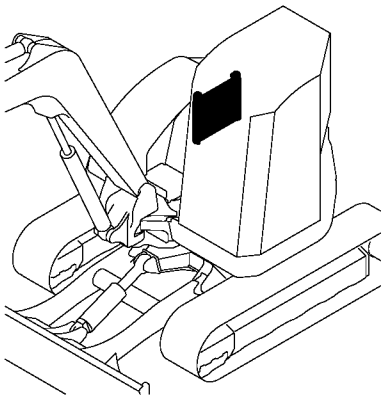

https://truckmanualshub.com/

PICTURESQUE INDEX(3) ・・・FIGURE

Fig. 61 HYD.OIL TANK

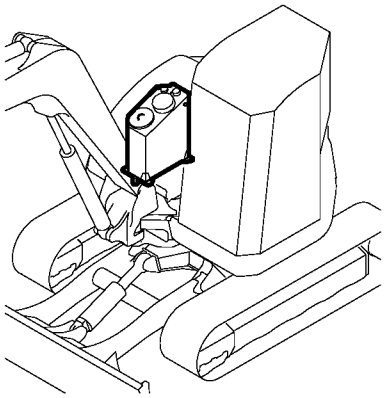

Fig. 62 HYD.OIL PIPING (TANK～PUMP～VALVE)

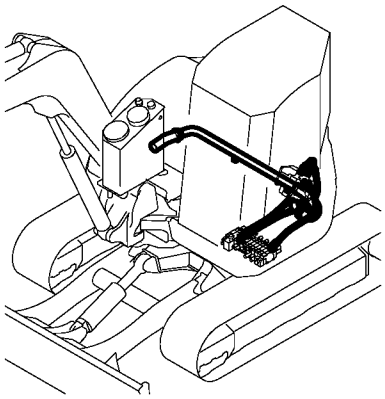

Fig. 63 HYD.OIL PIPING(VALVE～TURNING MOTOR,BOOM)

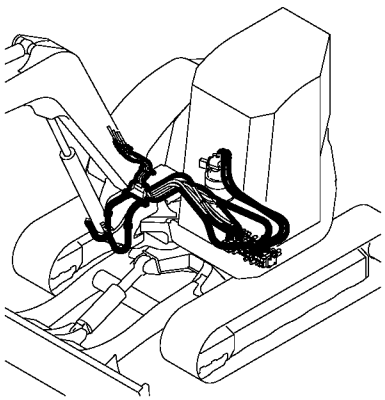

Fig. 64 HYD.OIL PIPING(PUMP, VALVE～SWIVEL,SWING)

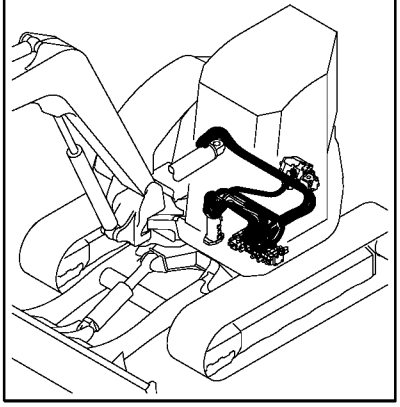

Fig. 65 HYD.OIL PIPING(RETURN:1)

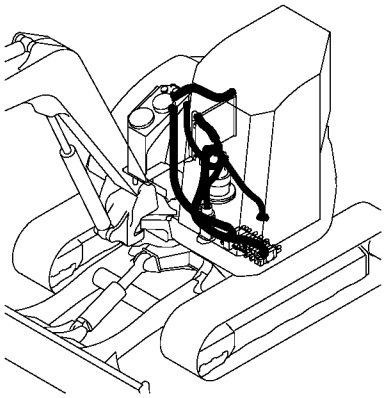

Fig. 66 HYD.OIL PIPING(RETURN:2)

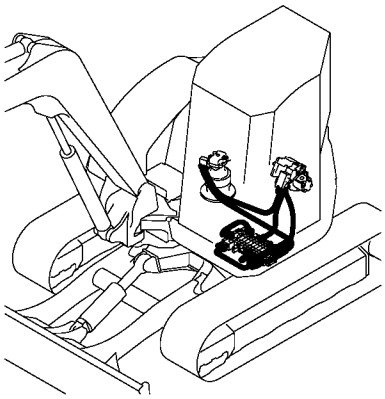

Fig. 67 HYD.OIL PIPING (P.T.O. :FRAME END)

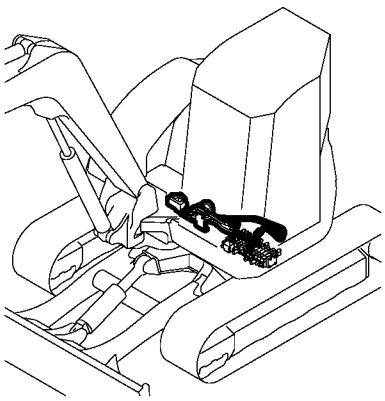

Fig. 68 HYD.OIL PIPING (TRACK FRAME)

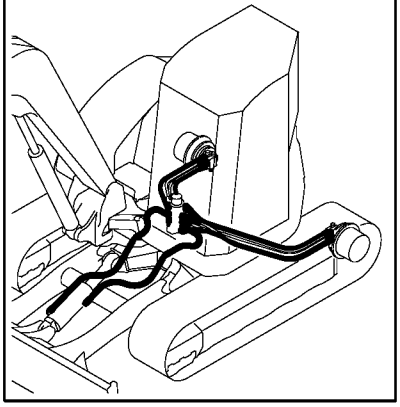

Fig. 69 HYD.OIL PIPING(BOOM)

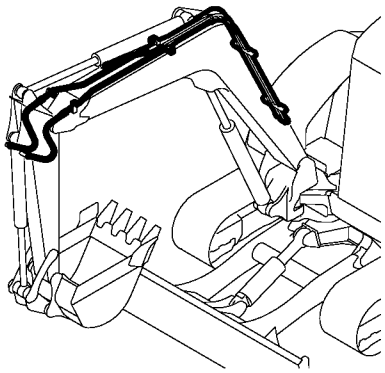

Fig. 70 HYD.OIL PIPING (P.T.O. :ARM END)

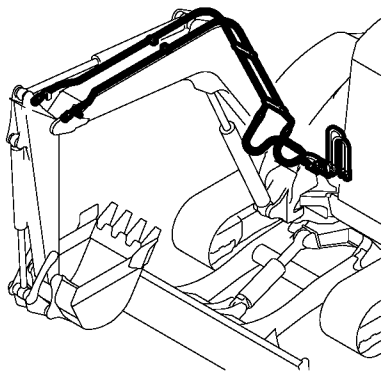

Fig. 71 CONTROL PIPING(RETURN)

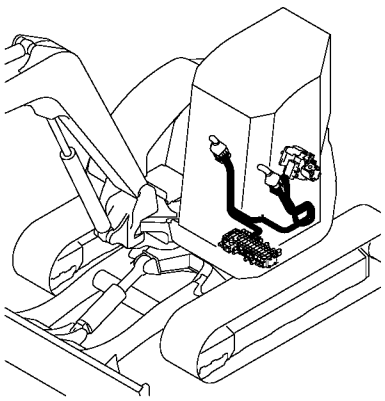

Fig. 72 CONTROL PIPING(REMOTE CONTROL V.～CONTROL V.

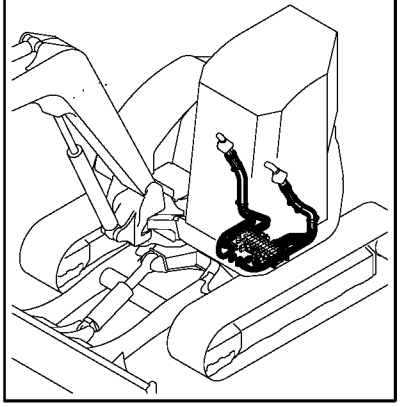

https://truckmanualshub.com/

PICTURESQUE INDEX(3) ・・・FIGURE

Fig. 73 GREASING

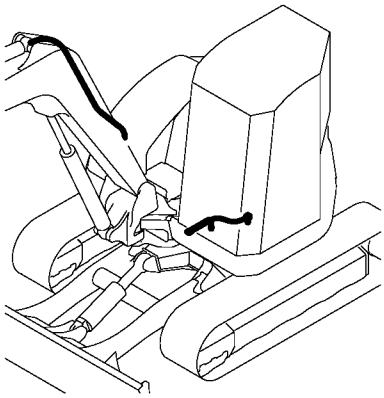

Fig. 74 BOOM BRACKET

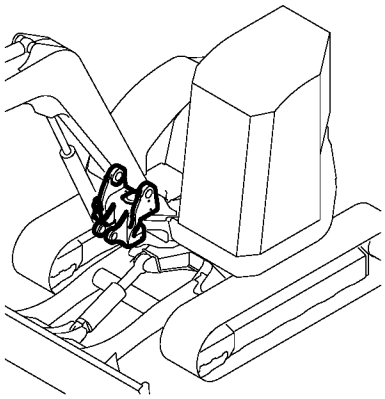

Fig. 75 BOOM

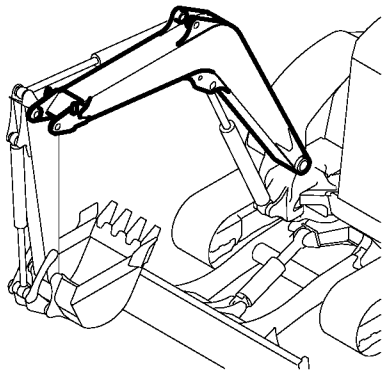

Fig. 76 ARM

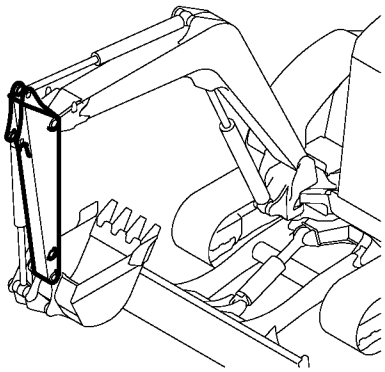

Fig. 77 BUCKET ARM & LINK

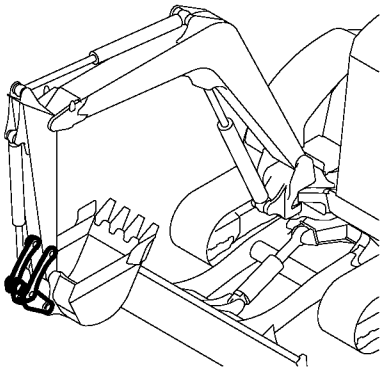

Fig. 78 BUCKET PIN

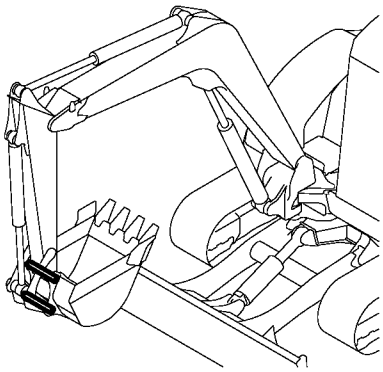

Fig. 79 BLADE

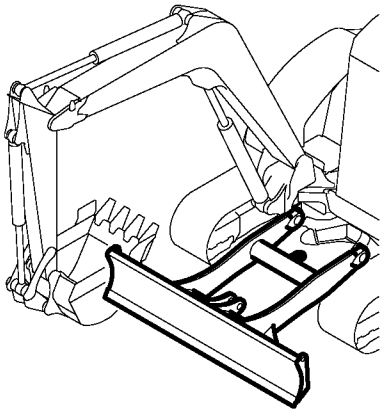

https://truckmanualshub.com/

```
1,1,,772478-03200,,"LABEL SET,VIO75(EP C",1,,,,,,,,,,,,,,,,,,
2,2,,172478-03160,,"LABEL,REAR",1,,,,,,,,,,,,,,,,,
3,2,,172458-03220,,"LABEL,ACCELERATOR",1,,,,,,,,,,,,,,,,,,
4,2,,172165-03231,,"LABEL, P.T.O.",1,,,,,,,,,,,,,,,,,,
5,2,,172458-03240,,"LABEL,LOCK",1,,,,,,,,,,,,,,,,,,
6,2,,172524-03271,,LABEL,1,,,,,,,,,,,,,,,,,
7,2,,172183-03280,,"LABEL,LOCK",1,,,,,,,,,,,,,,,,,,
8,2,,172438-03300,,LABEL,1,,,,,,,,,,,,,,,,,
9,2,,172463-03310,,"LABEL, MODEL L LW.US",1,,,,,,,,,,,,,,,,,,
10,2,,172187-03340,,LABEL,2,,,,,,,,,,,,,,,,,
11,2,,172141-03360,,"LABEL, START SWITCH",1,,,,,,,,,,,,,,,,,,
12,2,,172171-03420,,"CAUTION PLATE ASSY",1,,,,,,,,,,,,,,,,,
13,2,,172478-03440,,"LABEL,L-US",1,,,,,,,,,,,,,,,,,
14,2,,172478-03450,,"LABEL,R-US",1,,,,,,,,,,,,,,,,,
15,2,,172437-03510,,"LABEL,HOOK",3,,,,,,,,,,,,,,,,,
16,2,,172478-03400,,"LABEL,PATTERN A",1,,,,,,,,,,,,,,,,,
17,2,,172478-03460,,"LABEL,ADJUST CRAWLER",1,,,,,,,1,,,,,,,,,,
18,2,,172478-03250,,"LABEL,NOISE",1,,,,,,,,,,,,,,,,,
```

https://truckmanualshub.com/

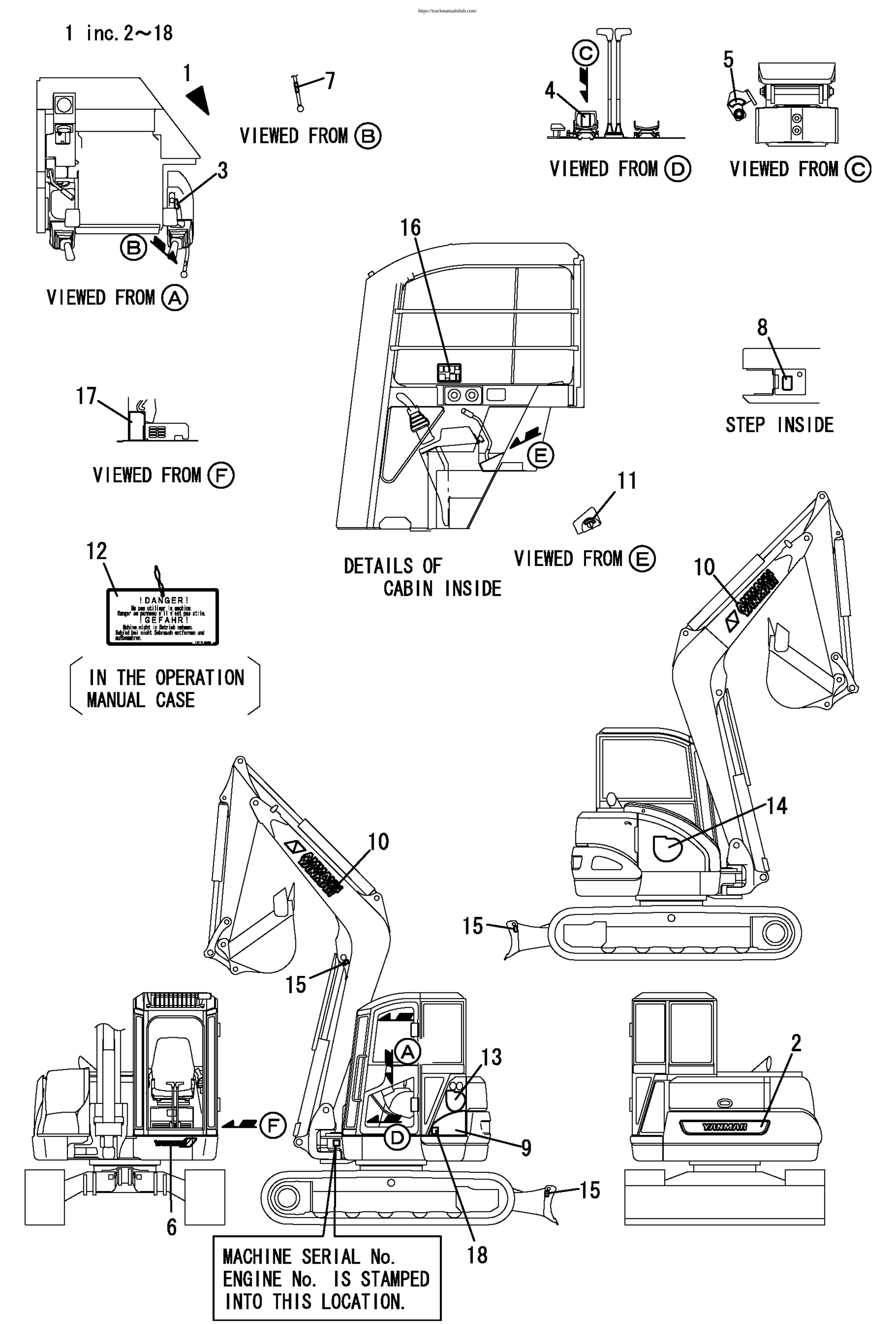

https://truckmanualshub.com/

1,1,,172171-03420,,"CAUTION PLATE ASSY",1,,,,,,,,,,,,,,,,,,

https://truckmanualshub.com/

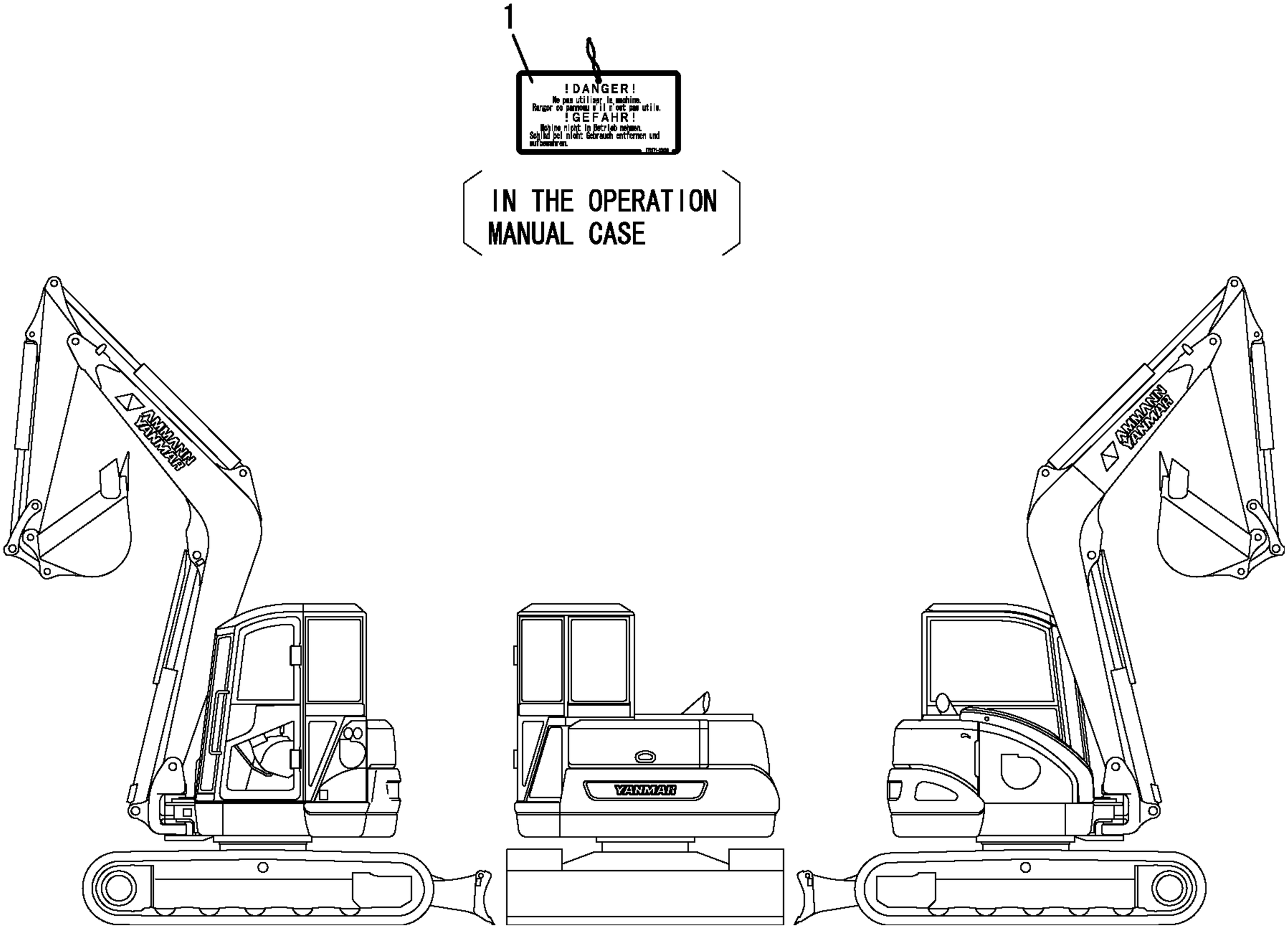

https://truckmanualshub.com/

```
1,1,,172478-11300,,"PIPE,EXH",1,,,,,,,,,,,,,,,,,
2,1,,172478-11500,,"COVER,MANIFOLD",1,,,,,,,,,,,,,,,,,,
4,2,,172478-11520,,"GLASS WOOL,A",1,,,,,,,,,,,,,,,,,,
5,2,,172478-11530,,"GLASS WOOL,B",1,,,,,,,,,,,,,,,,,,
6,2,,172478-11540,,"GLASS WOOL,C",1,,,,,,,,,,,,,,,,,,
7,2,,172478-11550,,"GLASS WOOL,D",1,,,,,,,,,,,,,,,,,,
8,1,,121120-13580,,CLAMP,1,,,,,,,,,,,,,,,,,
9,1,,172519-63240,,"BOLT  8X 16",2,,,,,,,,,,,,,,,,,,
10,1,,22117-100000,,"WASHER 10",1,,,,,,,,,,,,,,,,,,
11,1,,22217-100000,,"SPRING WASHER 10",1,,,,,,,,,,,,,,,,,,
12,1,,26106-100652,,"BOLT M10X 65 PLATED",1,,,,,,,,,,,,,,,,,,
13,1,,26706-100002,,"NUT M10",1,,,,,,,,,,,,,,,,,,
```

https://truckmanualshub.com/

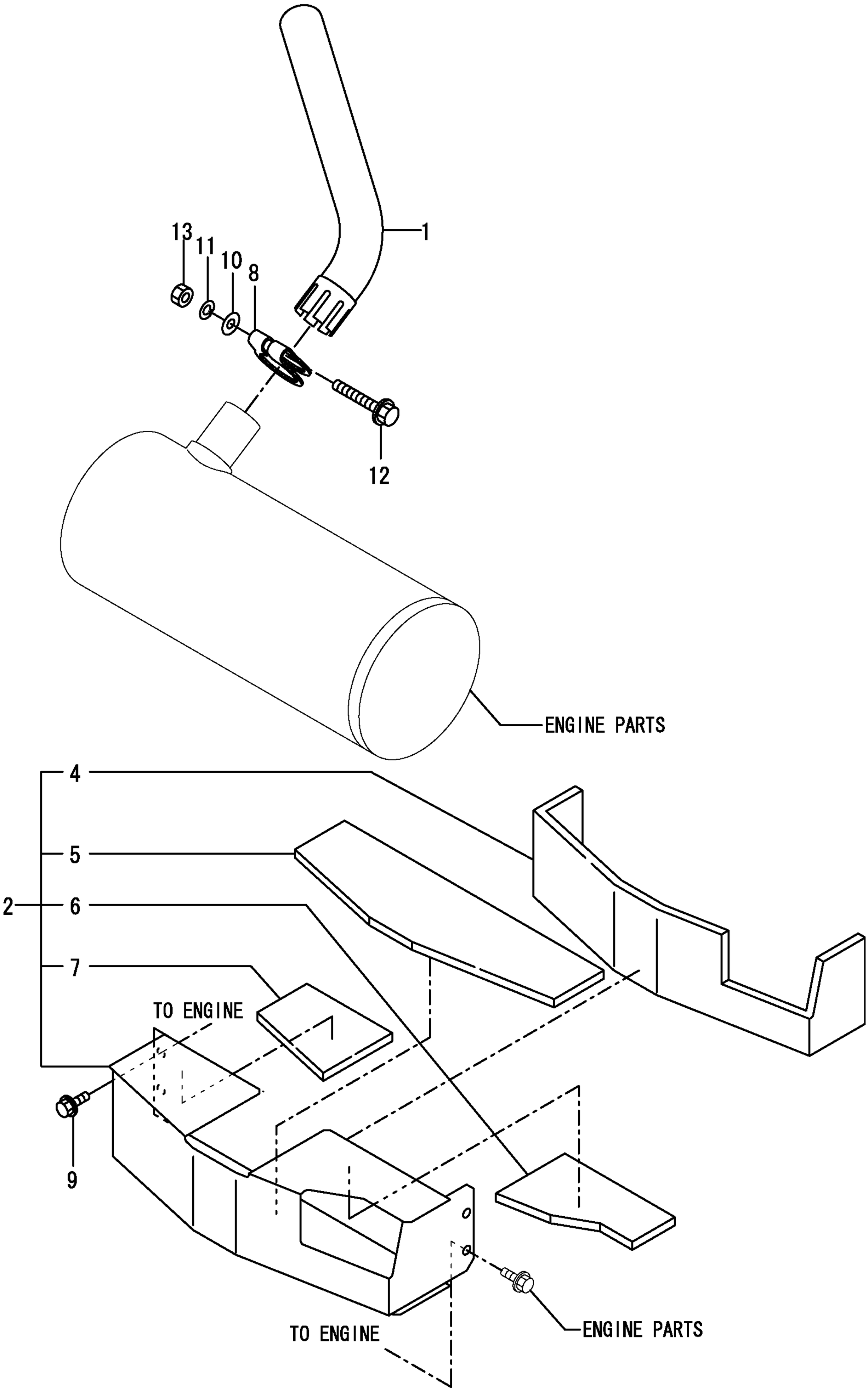

https://truckmanualshub.com/

```
1,1,,172455-11500,,"AIR CLEANER ASSY",1,,,,,,,,,,,,,,,,,
2,2,,172455-11650,,"BODY ASSY",1,,,,,,,,,,,,,,,,,
3,2,,119808-12540,,"VALVE, UNLOADER",1,,,,,,,,,,,,,,,,,
4,2,,129062-12560,,ELEMENT,1,,,,,,,,,,,,,,,,,
5,2,,129062-12570,,COVER-ASSY,1,,,,,,,,,,,,,,,,,
6,1,,172455-11510,,"HOSE ASSY, SUC.",1,,,,,,,,,,,,,,,,,
7,2,,172455-11520,,"HOSE, SUC. A",1,,,,,,,,,,,,,,,,,
8,2,,172455-11530,,"HOSE, SUC. B",1,,,,,,,,,,,,,,,,,
9,2,,119160-12060,,"SILENCER, INLET",1,,,,,,,,,,,,,,,,,
10,2,,23000-080000,,"CLAMP 80",2,,,,,,,,,,,,,,,,,
11,1,,172455-11540,,"HOSE, SUC. C",1,,,,,,,,,,,,,,,,,
12,1,,172455-11550,,"PIPE, SUC.",1,,,,,,,,,,,,,,,,,
13,1,,172455-11580,,HOSE,1,,,,,,,,,,,,,,,,,
14,1,,172455-11601,,"BRACKET, AIR CLEANER",1,,,,,,,,,,,,,,,,,
15,1,,172183-16560,,"CLIP 400,HOSE",1,,,,,,,,,,,,,,,,,
16,1,,23000-070000,,"CLAMP 70",2,,,,,,,,,,,,,,,,,
17,1,,23000-080000,,"CLAMP 80",3,,,,,,,,,,,,,,,,,
18,1,,26013-080202,,"BOLT W/WASHER M8X20",2,,,,,,,,,,,,,,,,,
19,1,,26013-100202,,"BOLT W/WASHER M10X20",2,,,,,,,,,,,,,,,,,
20,1,,26013-100252,,"BOLT W/WASHER M10X25",2,,,,,,,,,,,,,,,,,
```

https://truckmanualshub.com/

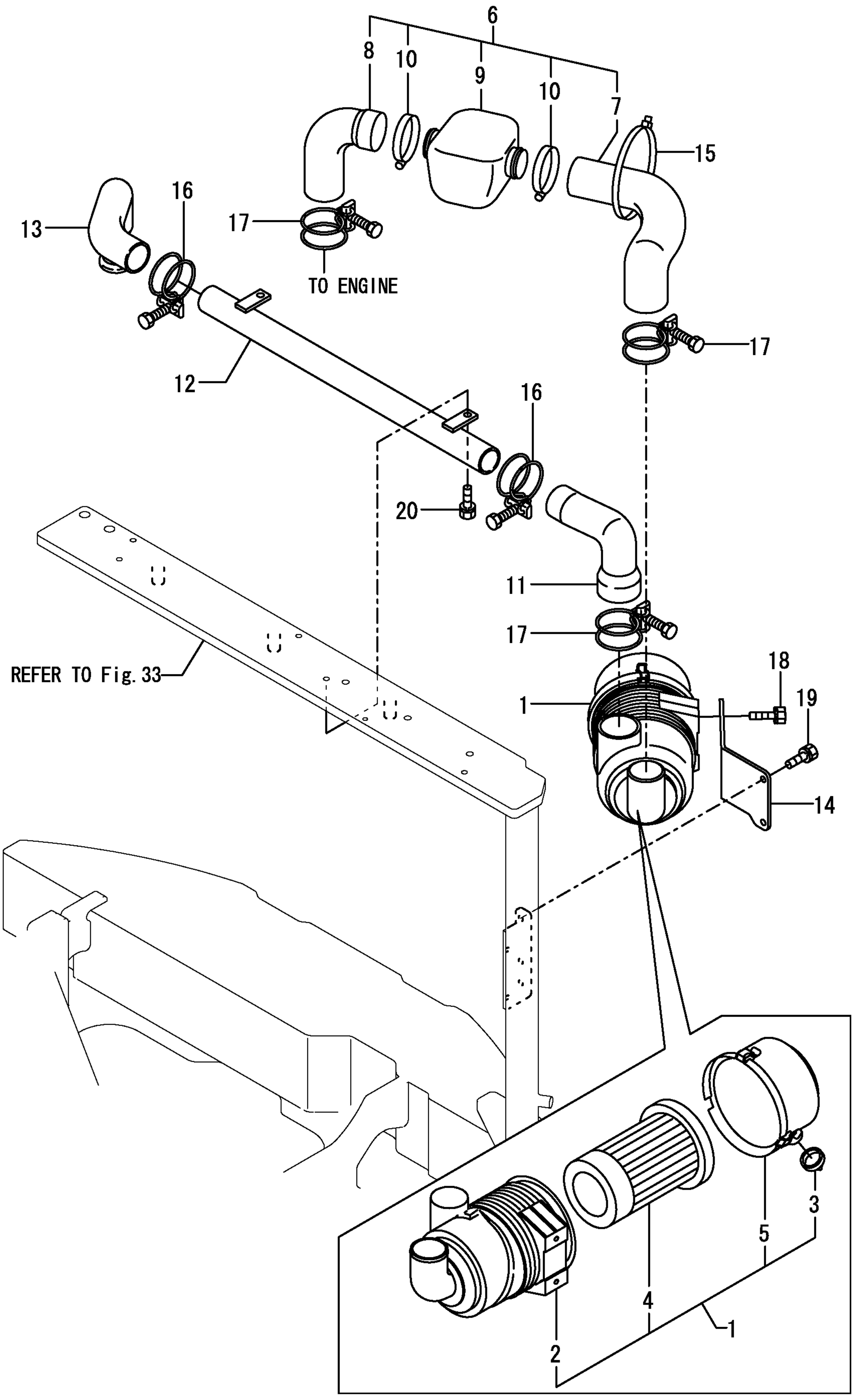

https://truckmanualshub.com/

```
1,1,,172458-12100,,"LEVER,ACCELERATOR",1,,,,,,,,,,,,,,,,,
2,1,,172463-12111,,"CABLE, ACCEL.",1,,,,,,,,,,,,,,,,,
3,1,,172187-12120,,SUPPORT,1,,,,,,,,,,,,,,,,,
4,1,,172455-12140,,GROMMET,2,,,,,,,,,,,,,,,,,
5,1,,172137-12270,,"JOINT, CABLE",1,,,,,,,,,,,,,,,,,
6,1,,1C6281-52310,,"PIN 6,COME-OFF SNAP",2,,,,,,,,,,,,,,,,,,
7,1,,1A1040-56900,,"PIN  6X 17",2,,,,,,,,,,,,,,,,,
8,1,,22137-060000,,"WASHER 6, POLISHED",2,,,,,,,,,,,,,,,,,
9,1,,26013-100162,,"BOLT M10X 16",2,,,,,,,,,,,,,,,,,
10,1,,26013-100252,,"BOLT W/WASHER M10X25",2,,,,,,,,,,,,,,,,,,
11,1,,933168-55770,,"BAND 146",2,,,,,,,,,,,,,,,,,
12,1,,172479-08200,,"DECEL. KIT (EP",1,,,,,,,1,,,,,,,,,,,,I
13,2,,172455-12140,,GROMMET,2,,,,,,,,,,,,,,,,,,,,I
14,2,,172187-12200,,"BASE CMP",1,,,,,,,,,,,,,,,,,,,,I
16,3,,24550-014200,,"BUSH 14X20",1,,,,,,,,,,,,,,,,,,,,I
17,2,,172187-12260,,"LINK A",1,,,,,,,,,,,,,,,,,,,,I
18,2,,172187-12280,,"LINK B",1,,,,,,,,,,,,,,,,,,,,I
20,3,,24550-014200,,"BUSH 14X20",1,,,,,,,,,,,,,,,,,,,,I
21,2,,172187-12320,,"SHAFT, DESEL",1,,,,,,,,,,,,,,,,,,,,I
22,2,,172187-12340,,"SPRING, RETURN",1,,,,,,,,,,,,,,,,,,,,I
23,2,,172187-12350,,CABLE,1,,,,,,,,,,,,,,,,,,,,I
24,2,,172478-12360,,"CABLE, ACCEL.",1,,,,,,,,,,,,,,,,,,,,I
25,2,,172175-12370,,PLATE,1,,,,,,,,,,,,,,,,,,,,I
26,2,,172455-16170,,HARNESS,1,,,,,,,,,,,,,,,,,,,,I
27,2,,172126-16540,,"CLAMP 10X70",1,,,,,,,,,,,,,,,,,,,,I
28,2,,172190-17220,,"RELEY, TIMER",1,,,,,,,,,,,,,,,,,,,,I
29,2,,172187-17900,,"SOLENOID B",1,,,,,,,,,,,,,,,,,,,,I
30,2,,1C6281-52310,,"PIN 6,COME-OFF SNAP",4,,,,,,,,,,,,,,,,,,,,I
31,2,,1A3809-56915,,"PIN 6X 20",1,,,,,,,,,,,,,,,,,,,,I
32,2,,119620-66820,,JOINT,1,,,,,,,,,,,,,,,,,,,,I
33,2,,22137-060000,,"WASHER 6, POLISHED",5,,,,,,,,,,,,,,,,,,,,I
34,2,,22217-100000,,"SPRING WASHER 10",1,,,,,,,,,,,,,,,,,,,,I
35,2,,22351-040025,,"PIN 4X25,SPRING",1,,,,,,,,,,,,,,,,,,,,I
36,2,,24311-000210,,"O-RING 1A P-21.0",4,,,,,,,,,,,,,,,,,,,,I
37,2,,26013-060162,,"BOLT M 6X 16",2,,,,,,,,,,,,,,,,,,,,I
38,2,,26013-060252,,"BOLT M 6X 25",2,,,,,,,,,,,,,,,,,,,,I
39,2,,26116-100162,,"BOLT M10X 16 PLATED",1,,,,,,,,,,,,,,,,,,,,I
40,2,,26716-060002,,"NUT 6",1,,,,,,,,,,,,,,,,,,,,I
41,2,,933166-17730,,"WASHER 10.5X30",1,,,,,,,,,,,,,,,,,,,,I
42,2,,933168-55770,,"BAND 146",2,,,,,,,,,,,,,,,,,,,,I
43,2,,933168-55770,,"BAND 146",5,,,,,,,,,,,,,,,,,,,,I
```

https://truckmanualshub.com/

P/C NEWS No:Y00S4030-1
PUBLISHED:2003/04

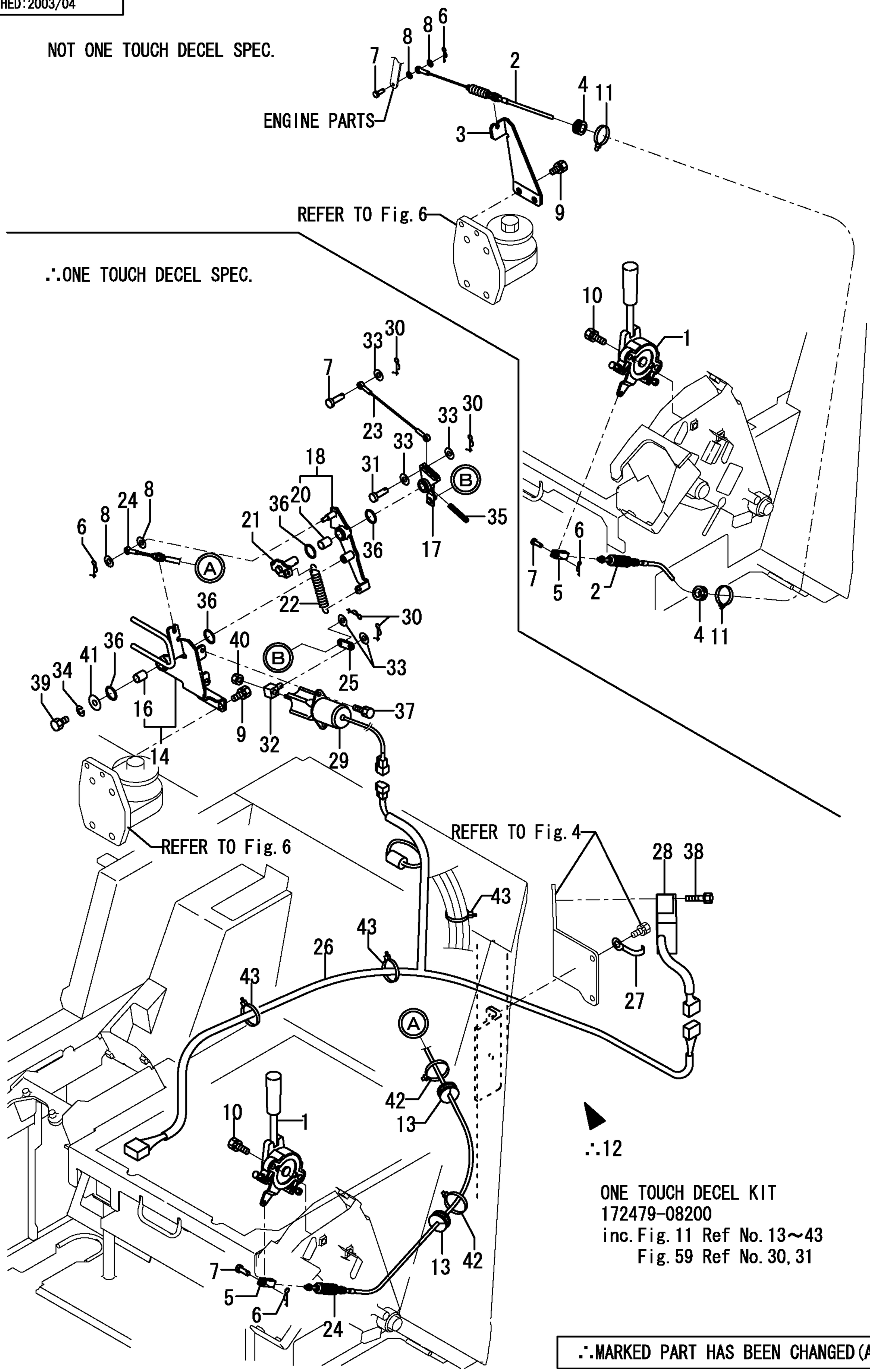

ONE TOUCH DECEL KIT
172479-08200
inc. Fig. 11 Ref No. 13～43
Fig. 59 Ref No. 30, 31

∴MARKED PART HAS BEEN CHANGED(ADDED).

https://truckmanualshub.com/

```
1,1,,172455-13101,,"BRACKET RR",1,,,,,,,,,,,,,,,,,,
2,1,,172455-13131,,"BRACKET FR",1,,,,,,,,,,,,,,,,,,
3,1,,172455-13151,,"BRACKET LR",1,,,,,,,,,,,,,,,,,,
4,1,,172162-13170,,WASHER,2,,,,,,,,,,,,,,,,,,
5,1,,172162-13180,,"MOUNT,ENGINE",8,,,,,,,,,,,,,,,,,,
6,1,,172165-13220,,WASHER,8,,,,,,,,,,,,,,,,,,
7,1,,172187-13731,,"BRACKET RF",1,,,,,,,,,,,,,,,,,,
8,1,,172187-13830,,STOPPER,2,,,,,,,,,,,,,,,,,,
9,1,,1E6480-16920,,"BOLT, M10X35,11T",12,,,,,,,,,,,,,,,,,,
10,1,,172137-46040,,"SEAT, SPRING",12,,,,,,,,,,,,,,,,,,
11,1,,22217-100000,,"SPRING WASHER 10",12,,,,,,,,,,,,,,,,,,
12,1,,22217-120000,,"SPRING WASHER",8,,,,,,,,,,,,,,,,,,
13,1,,22217-160000,,"SPRING WASHER 16",4,,,,,,,,,,,,,,,,,,
14,1,,26076-120352,,"BOLT M12X 35",8,,,,,,,,,,,,,,,,,,
15,1,,26076-161302,,"BOLT 16*130",4,,,,,,,,,,,,,,,,,,
```

https://truckmanualshub.com/

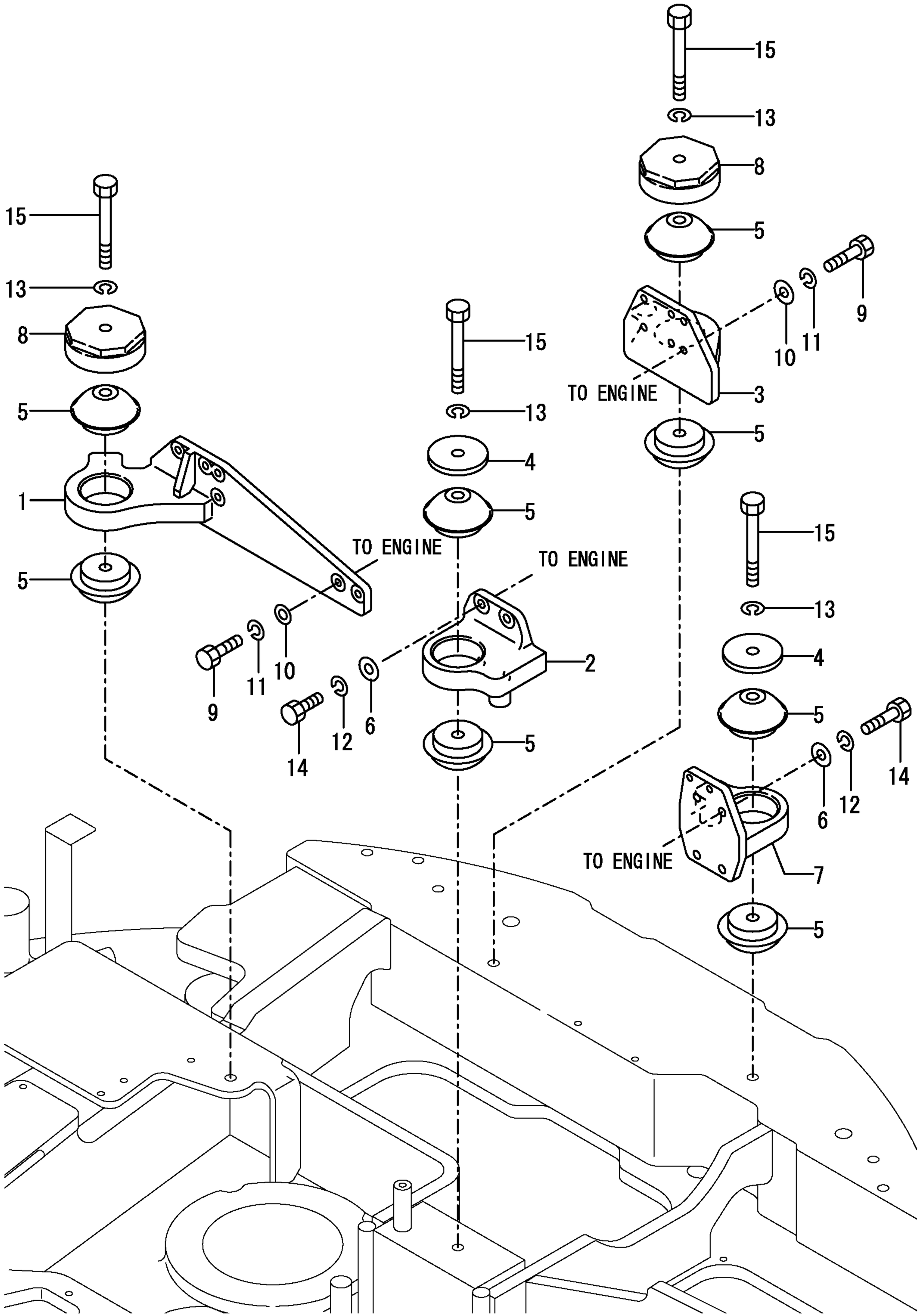

```
1,1,,172444-13210,,"COCK ASSY,2-WAY",1,,,,,,,,,,,,,,,,,
2,2,,172444-13220,,BODY,1,,,,,,,,,,,,,,,,,
3,2,,121250-49121,,PLUG,1,,,,,,,,,,,,,,,,,
4,2,,24311-000160,,"O-RING 1A P-16.0",1,,,,,,,,,,,,,,,,,
5,1,,172187-13261,,SHURAUD,1,,,,,,,,,,,,,,,,,
6,1,,172187-13300,,"HOSE A, RADIATOR",1,,,,,,,,,,,,,,,,,
7,1,,172478-13300,,"RADIATOR CMP",1,,,,,,,,,,,,,,,,,
9,2,,172187-13921,,"HOSE, RUBBER",1,,,,,,,,,,,,,,,,,
10,2,,119259-44570,,"CAP, RADIATOR",1,,,,,,,,,,,,,,,,,
11,2,,121250-44590,,CLAMP,2,,,,,,,,,,,,,,,,,
12,1,,172187-13310,,"HOSE B, RADIATOR",1,,,,,,,,,,,,,,,,,
13,1,,172187-13360,,SEAL,1,,,,,,,,,,,,,,,,,
14,1,,172187-13370,,SEAL,1,,,,,,,,,,,,,,,,,
15,1,,172122-13381,,HOSE,1,,,,,,,,,,,,,,,,,
16,1,,172187-13480,,"SEAL 560",1,,,,,,,,,,,,,,,,,
17,1,,172187-13501,,WIRE,1,,,,,,,,,,,,,,,,,
18,1,,171064-44510,,"SUB-TANK ASSY",1,,,,,,,,,,,,,,,,,
20,2,,121450-44531,,CAP,1,,,,,,,,,,,,,,,,,
21,2,,124450-44560,,CLAMP,1,,,,,,,,,,,,,,,,,
22,2,,121470-44581,,GASKET,1,,,,,,,,,,,,,,,,,
23,2,,23065-070225,,"HOSE  7* 225",1,,,,,,,,,,,,,,,,,
24,1,,124450-44550,,"CLAMP, SUB-TANK",1,,,,,,,,,,,,,,,,,
25,1,,121256-44600,,"BRACKET, SUB-TANK",1,,,,,,,,,,,,,,,,,
26,1,,124766-59050,,"CLAMP 12",2,,,,,,,,,,,,,,,,,
27,1,,172162-62540,,"SEAL,STEP L",1,,,,,,,,,,,,,,,,,
28,1,,23010-050000,,"CLAMP 50",4,,,,,,,,,,,,,,,,,
29,1,,26013-080162,,"BOLT W/WASHER M8X16",3,,,,,,,,,,,,,,,,,
30,1,,26013-080162,,"BOLT W/WASHER M8X16",2,,,,,,,,,,,,,,,,,
31,1,,26013-080252,,"BOLT M 8X 25",2,,,,,,,,,,,,,,,,,
32,1,,26022-080162,,"SCREW M 8X 16",2,,,,,,,,,,,,,,,,,
```

https://truckmanualshub.com/

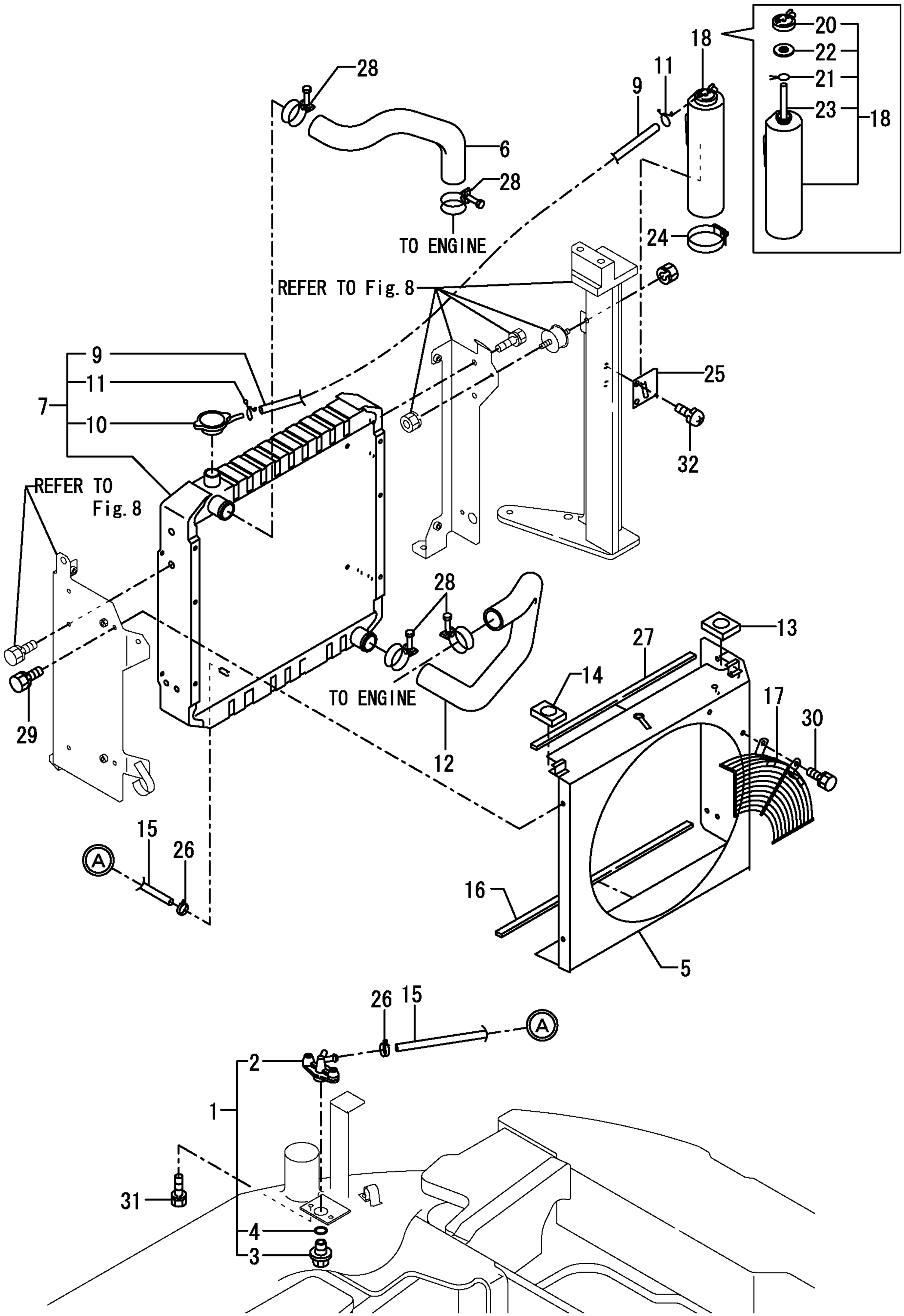

https://truckmanualshub.com/

```
1,1,,172455-13301,,"BRACKET R ASSY",1,,,,,,,,,,,,,,,,,,
2,1,,172122-13310,,"MOUNT, RADIATOR",2,,,,,,,,,,,,,,,,,,
3,1,,172455-13361,,"PLATE ASSY",1,,,,,,,,,,,,,,,,,,
4,1,,172455-13400,,"MOUNT L ASSY",1,,,,,,,,,,,,,,,,,,
6,2,,172187-13530,,"SEAL A, RADIATOR",1,,,,,,,,,,,,,,,,,,
7,2,,172187-13540,,"SEAL B, RADIATOR",1,,,,,,,,,,,,,,,,,,
8,1,,172187-13420,,"BRACKET L",1,,,,,,,,,,,,,,,,,,
9,1,,172455-13430,,"MOUNT R ASSY",1,,,,,,,,,,,,,,,,,,
11,2,,172187-13530,,"SEAL A, RADIATOR",1,,,,,,,,,,,,,,,,,,
12,2,,172187-13540,,"SEAL B, RADIATOR",1,,,,,,,,,,,,,,,,,,
13,1,,172455-13601-1,,"GRILLE,DUCT(GREEN:82",1,,,,,,,,,,,,,,,,,,
14,1,,172478-13600,,"DUCT,RADIATOR",1,,,,,,,,,,,,,,,,,,
15,2,,172183-13480,,"RUBBER,SEAL",1,,,,,,,,,,,,,,,,,,
16,2,,172164-13520,,"RUBBER, SEAL",2,,,,,,,,,,,,,,,,,,
17,2,,172455-13610,,"RUBBER, SEAL 160",1,,,,,,,,,,,,,,,,,,
19,2,,172455-13620,,"RUBBER, SEAL 480",1,,,,,,,,,,,,,,,,,,
20,2,,172455-13630,,"SEAL A, DUCT",1,,,,,,,,,,,,,,,,,,
21,2,,172455-13640,,"SEAL B, DUCT",1,,,,,,,,,,,,,,,,,,
26,2,,172162-61120,,"SEAL,COVER B",1,,,,,,,,,,,,,,,,,,
27,2,,172164-61250,,"RUBBER, SEAL",1,,,,,,,,,,,,,,,,,,
28,2,,172171-65850,,"RUBBER,SEAL K",1,,,,,,,,,,,,,,,,,,
29,1,,172478-13700-1,,"COVER,DUCT(GREEN:82)",1,,,,,,,,,,,,,,,,,,
32,1,,172162-13780,,"MOUNT 42-87,EVAPORTR",2,,,,,,,,,,,,,,,,,,
33,1,,172162-13780,,"MOUNT 42-87,EVAPORTR",1,,,,,,,,,,,,,,,,,,
34,1,,172168-46760,,"BOLT M10X20",3,,,,,,,,,,,,,,,,,,
35,1,,172168-46760,,"BOLT M10X20",2,,,,,,,,,,,,,,,,,,
36,1,,172168-46760,,"BOLT M10X20",4,,,,,,,,,,,,,,,,,,
37,1,,172165-53490,,"BOLT M16X 40",3,,,,,,,,,,,,,,,,,,
38,1,,172519-63240,,"BOLT  8X 16",1,,,,,,,,,,,,,,,,,,
39,1,,172187-64800,,CAP,1,,,,,,,,,,,,,,,,,,
40,1,,22137-100000,,"WASHER 10,POLISHED",1,,,,,,,,,,,,,,,,,,
41,1,,22157-100000,,"WASHER 10",2,,,,,,,,,,,,,,,,,,
42,1,,22217-160000,,"SPRING WASHER 16",3,,,,,,,,,,,,,,,,,,
43,1,,26013-080162,,"BOLT W/WASHER M8X16",6,,,,,,,,,,,,,,,,,,
44,1,,26013-100202,,"BOLT W/WASHER M10X20",2,,,,,,,,,,,,,,,,,,
45,1,,26013-100252,,"BOLT W/WASHER M10X25",2,,,,,,,,,,,,,,,,,,
46,1,,26051-080002,,"NUT M 8",4,,,,,,,,,,,,,,,,,,
47,1,,26051-100002,,"NUT M10",6,,,,,,,,,,,,,,,,,,
```

https://truckmanualshub.com/

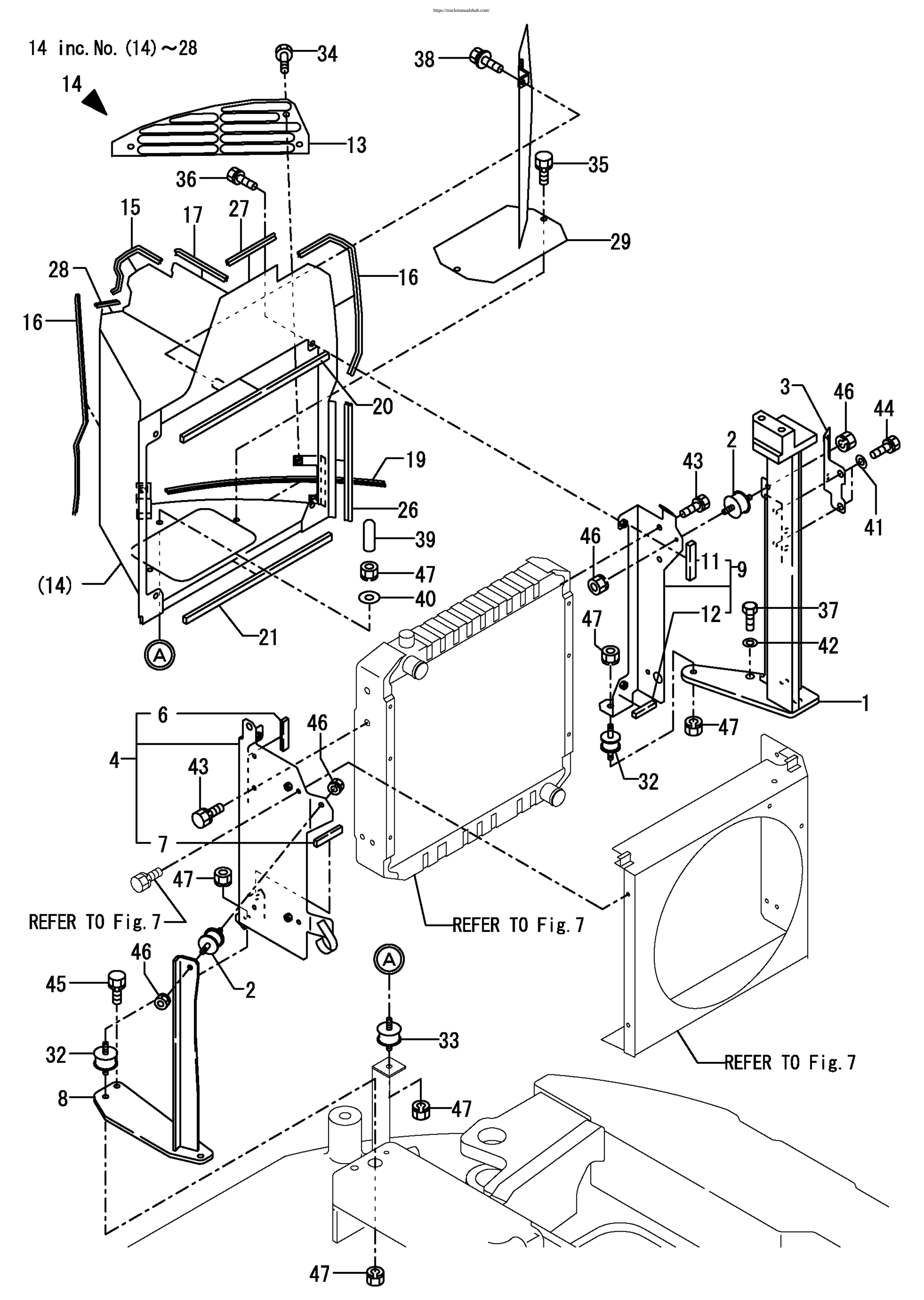

https://truckmanualshub.com/

```
1,1,,772455-14101-1,,"FUEL TANK ASSY  (87)",1,,,,,,,,,,,,,,,,,,
2,2,,104200-11920,,COCK,1,,,,,,,,,,,,,,,,,
4,2,,172162-14200,,GASKET,1,,,,,,,,,,,,,,,,,
5,2,,172187-14220,,GAUGE,1,,,,,,,,,,,,,,,,,
6,2,,172455-14240,,"HOSE, FO GAUGE",1,,,,,,,,,,,,,,,,,
7,2,,172141-14260,,FLOAT,1,,,,,,,,,,,,,,,,,
8,2,,172187-14290,,"FUEL INLET NET",1,,,,,,,,,,,,,,,,,
9,2,,172455-14340,,"CAP ASSY, FUEL TANK",1,,,,,,,,,,,,,,,,,,
10,3,,172187-14320,,GASKET,1,,,,,,,,,,,,,,,,,
11,2,,172455-14400,,"HOSE 9.5X1530",1,,,,,,,,,,,,,,,,,,
12,2,,172444-14410,,HOSE,1,,,,,,,,,,,,,,,,,
13,2,,172455-14500,,"FUEL CATCH",1,,,,,,,,,,,,,,,,,
14,2,,172122-55061,,"BRACKET, GREASE PUMP",2,,,,,,,,,,,,,,,,,
15,2,,22217-050000,,"SPRING WASHER  5",5,,,,,,,,,,,,,,,,,
16,2,,23010-014000,,"CLAMP 14",2,,,,,,,,,,,,,,,,,
17,2,,23010-014000,,"CLAMP 14",1,,,,,,,,,,,,,,,,,
18,2,,23080-013000,,"CLAMP 13,HOSE",1,,,,,,,,,,,,,,,,,
19,2,,26013-060102,,"BOLT M 6X 10",4,,,,,,,,,,,,,,,,,
20,2,,26022-050122,,"SCREW M 5X 12",5,,,,,,,,,,,,,,,,,
21,1,,22137-160000,,"WASHER 16,POLISHED",4,,,,,,,,,,,,,,,,,
22,1,,22217-160000,,"SPRING WASHER 16",4,,,,,,,,,,,,,,,,,
23,1,,26116-160452,,"BOLT M16X 45 PLATED",4,,,,,,,,,,,,,,,,,
```

https://truckmanualshub.com/

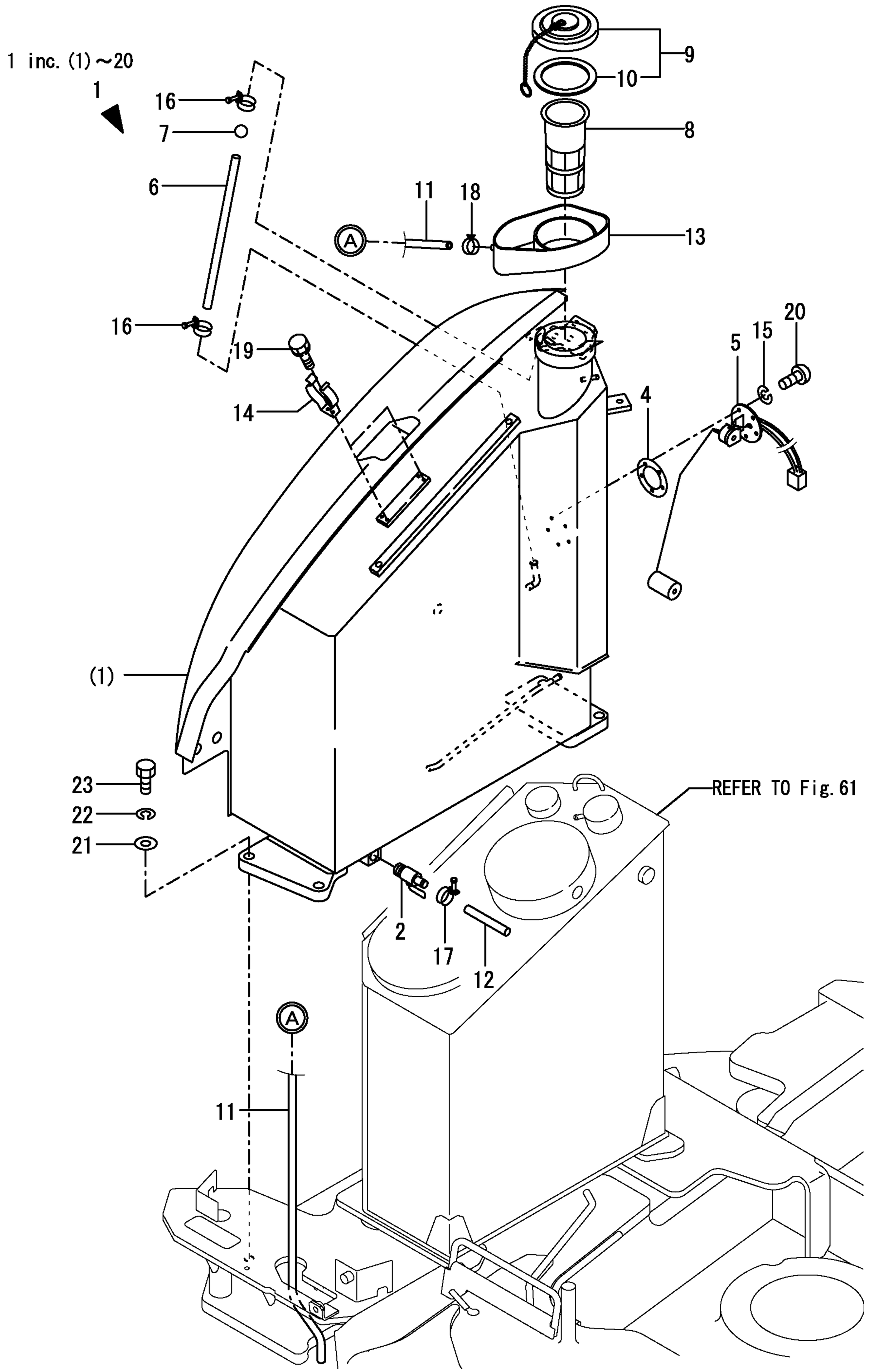

https://truckmanualshub.com/

```
1,1,,172187-14430,,HOSE,1,,,,,,,,,,,,,,,,,
2,1,,172187-14460,,CLAMP,1,,,,,,,,,,,,,,,,,
3,1,,172187-14470,,HOSE,1,,,,,,,,,,,,,,,,,
4,1,,172171-14610,,"HOSE 260,FUEL",1,,,,,,,,,,,,,,,,,
5,1,,172463-14610,,"BRACKET, W.S.",1,,,,,,,,,,,,,,,,,
6,1,,172463-14650,,"HOSE,FO 1350",1,,,,,,,,,,,,,,,,,
7,1,,172112-16650,,CLAMP(B),1,,,,,,,,,,,,,,,,,
8,1,,129412-52100,,"PUMP ASSY,FUEL FEED",1,,,,,,,,,,,,,,,,,,
9,1,,129335-55705,,"SEPARATOR,WATER",1,,,,,,,,,,,,,,,,,
10,2,,104200-55321,,"VALVE, TAPER",1,,,,,,,,,,,,,,,,,
11,2,,104200-55330,,"SPRING, TAPER VALVE",1,,,,,,,,,,,,,,,,,,
12,2,,104200-55341,,"HANDLE, COCK",1,,,,,,,,,,,,,,,,,
13,2,,121254-55510,,"CUP, STRAINER",1,,,,,,,,,,,,,,,,,
14,2,,102103-55520,,O-RING,1,,,,,,,,,,,,,,,,,
15,2,,110250-55610,,"RING, RETAINING",1,,,,,,,,,,,,,,,,,
16,2,,121850-55710,,SCREEN,1,,,,,,,,,,,,,,,,,
17,2,,121257-55720,,"SPRING, SCREEN",1,,,,,,,,,,,,,,,,,
18,2,,121257-55731,,FLOAT,1,,,,,,,,,,,,,,,,,
20,2,,101720-55750,,PLUG,2,,,,,,,,,,,,,,,,,
21,2,,104200-55750,,"SCREW M 4",1,,,,,,,,,,,,,,,,,
22,2,,23418-060000,,"GASKET 6, NYLON",2,,,,,,,,,,,,,,,,,
23,2,,24311-240100,,"O-RING 1A P-10A",1,,,,,,,,,,,,,,,,,
24,1,,124766-59050,,"CLAMP 12",8,,,,,,,,,,,,,,,,,
25,1,,1A1380-59480,,"CLAMP A,SM.&DYN.CORD",2,,,,,,,,,,,,,,,,,,
26,1,,22137-060000,,"WASHER 6, POLISHED",2,,,,,,,,,,,,,,,,,
27,1,,22137-080000,,"WASHER 8, POLISHED",1,,,,,,,,,,,,,,,,,
28,1,,22217-080000,,"SPRING WASHER  8",1,,,,,,,,,,,,,,,,,
29,1,,22217-080000,,"SPRING WASHER  8",2,,,,,,,,,,,,,,,,,
30,1,,22217-100000,,"SPRING WASHER 10",1,,,,,,,,,,,,,,,,,
31,1,,26013-060162,,"BOLT M 6X 16",2,,,,,,,,,,,,,,,,,
32,1,,26013-100162,,"BOLT M10X 16",1,,,,,,,,,,,,,,,,,
33,1,,26013-100162,,"BOLT M10X 16",1,,,,,,,,,,,,,,,,,
34,1,,26116-080162,,"BOLT 8X16",2,,,,,,,,,,,,,,,,,
35,1,,26116-080652,,"BOLT M 8X 65 PLATED",1,,,,,,,,,,,,,,,,,
36,1,,26116-100162,,"BOLT M10X 16 PLATED",1,,,,,,,,,,,,,,,,,
37,1,,933168-55770,,"BAND 146",1,,,,,,,,,,,,,,,,,
38,1,,172126-11510,,"BAND 300",1,,,,,,,,,,,,,,,,,
```

https://truckmanualshub.com/

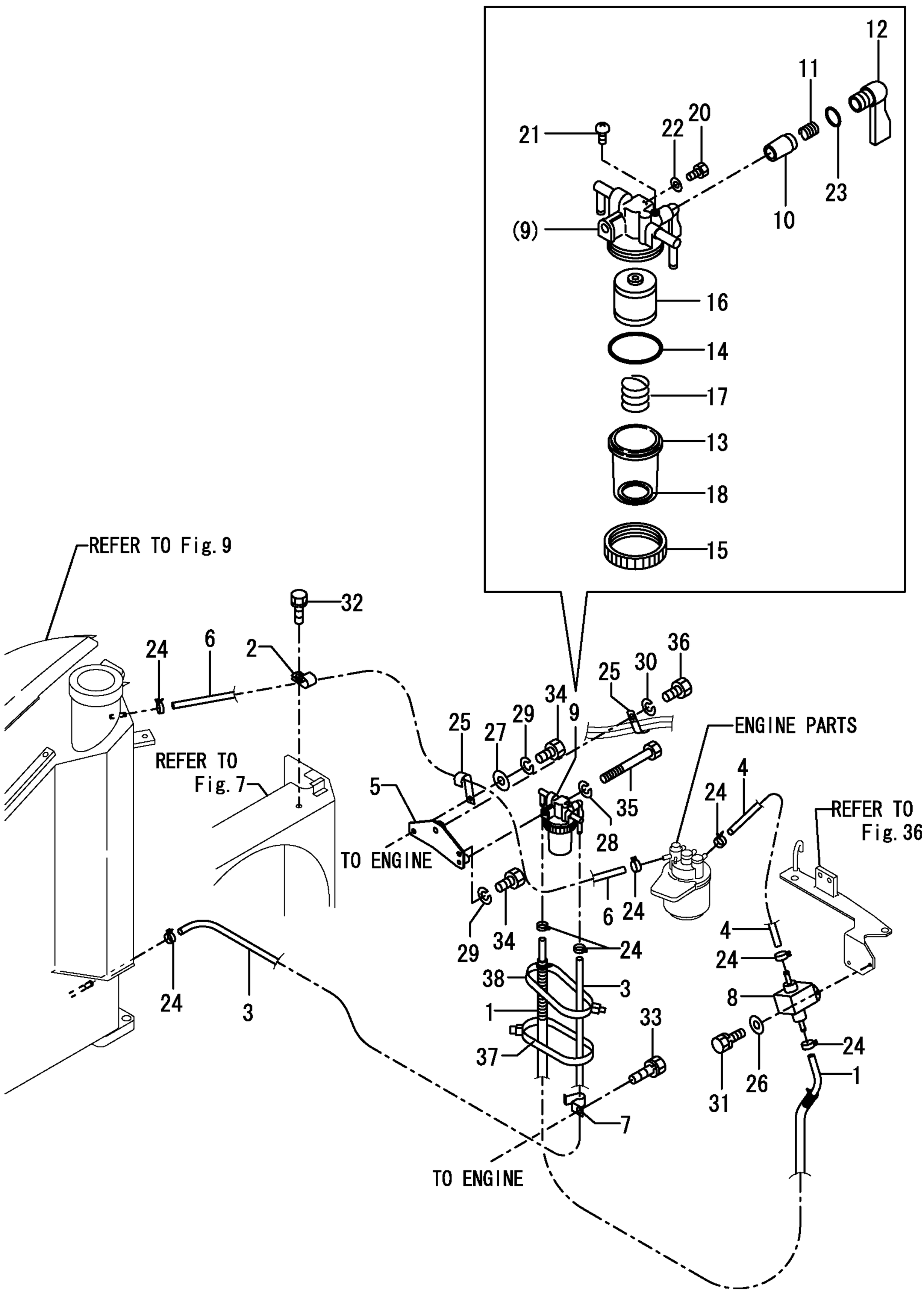

https://truckmanualshub.com/

```
1,1,,172478-16100,,"CODE(+),BATTERY",1,,,,,,,,,,,,,,,,,
3,2,,172478-16120,,"HARNESS C",1,,,,,,,,,,,,,,,,,
4,1,,172187-16110,,"CODE, BATTERY -",1,,,,,,,,,,,,,,,,,
5,1,,172187-16150,,BATTERY,1,,,,,,,,,,,,,,,,,
6,1,,22217-080000,,"SPRING WASHER  8",1,,,,,,,,,,,,,,,,,
7,1,,22217-100000,,"SPRING WASHER 10",1,,,,,,,,,,,,,,,,,
8,1,,26116-100162,,"BOLT M10X 16 PLATED",1,,,,,,,,,,,,,,,,,,
9,1,,26716-080002,,"NUT M 8",1,,,,,,,,,,,,,,,,,
10,1,,172112-16201,,"RETAINER, BATTERY",1,,,,,,,,,,,,,,,,,
11,1,,172512-16350,,"ROD, CLAMP",2,,,,,,,,,,,,,,,,,
12,1,,22157-080000,,"WASHER  8",2,,,,,,,,,,,,,,,,,
13,1,,26716-080002,,"NUT M 8",4,,,,,,,,,,,,,,,,,
```

https://truckmanualshub.com/

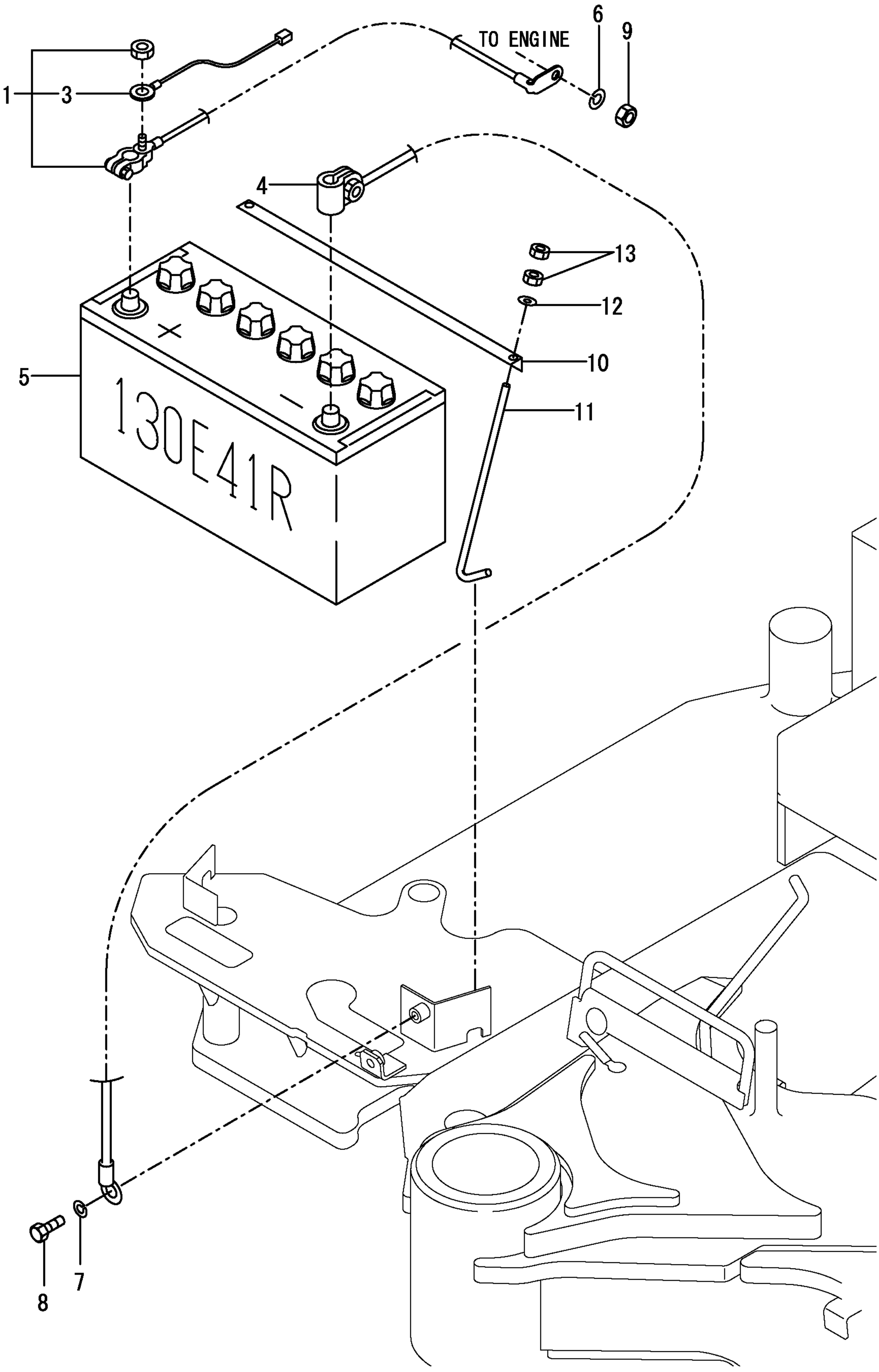

https://truckmanualshub.com/

```
1,1,,172126-11510,,"BAND 300",5,,,,,,,,,,,,,,,,
2,1,,172478-16500,,"HARNESS A",1,,,,,,,,,,,,,,,,
4,2,,172458-16550,,"HUSE,SLOW BLOW (50A",1,,,,,,,,,,,,,,,,,,
5,2,,172648-16600,,DIODE,1,,,,,,,,,,,,,,,,
7,1,,172478-16520,,"HARNESS B",1,,,,,,,,,,,,,,,,
8,1,,172187-16530,,"HARNESS D",1,,,,,,,,,,,,,,,,
9,1,,172183-16560,,"CLIP 400,HOSE",1,,,,,,,,,,,,,,,,
10,1,,172187-16600,,"CODE, ENGINE EARTH",1,,,,,,,,,,,,,,,,,
11,1,,172112-16650,,CLAMP(B),1,,,,,,,,,,,,,,,,
12,1,,194440-51620,,"CLAMP, WIRE HARNESS",1,,,,,,,,,,,,,,,,,
13,1,,22137-080000,,"WASHER 8, POLISHED",1,,,,,,,,,,,,,,,,
14,1,,22137-100000,,"WASHER 10,POLISHED",2,,,,,,,,,,,,,,,,
15,1,,22217-050000,,"SPRING WASHER  5",1,,,,,,,,,,,,,,,,
16,1,,22217-080000,,"SPRING WASHER  8",1,,,,,,,,,,,,,,,,
17,1,,22217-080000,,"SPRING WASHER  8",1,,,,,,,,,,,,,,,,
18,1,,22217-100000,,"SPRING WASHER 10",2,,,,,,,,,,,,,,,,
19,1,,22217-100000,,"SPRING WASHER 10",1,,,,,,,,,,,,,,,,
20,1,,26116-080162,,"BOLT 8X16",1,,,,,,,,,,,,,,,,
21,1,,26116-080162,,"BOLT 8X16",1,,,,,,,,,,,,,,,,
22,1,,26116-100162,,"BOLT M10X 16 PLATED",2,,,,,,,,,,,,,,,,,
23,1,,26116-100162,,"BOLT M10X 16 PLATED",1,,,,,,,,,,,,,,,,,
24,1,,26716-050002,,"NUT M 5",1,,,,,,,,,,,,,,,,
25,1,,933152-09280,,"BAND 170",5,,,,,,,,,,,,,,,,
26,1,,933171-15680,,"GROMMET 40X13",1,,,,,,,,,,,,,,,,
```

https://truckmanualshub.com/

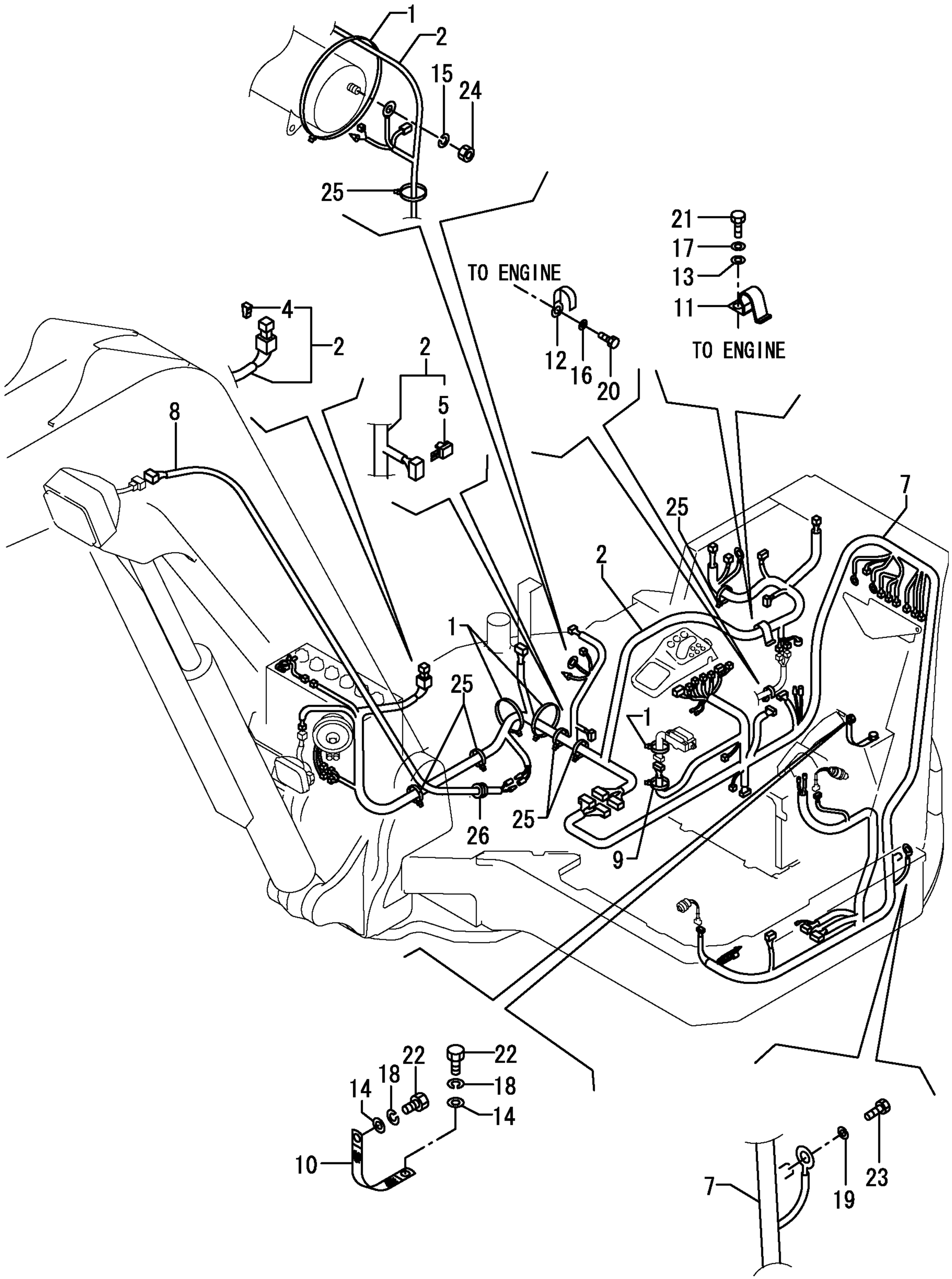

https://truckmanualshub.com/

```
1,1,,172187-17100,,"SWITCH, START",1,,,,,,,,,,,,,,,,,
2,2,,172187-17070,,CODE,1,,,,,,,,,,,,,,,,,
3,2,,172187-17080,,"COVER M5",3,,,,,,,,,,,,,,,,,
4,2,,172187-17090,,"COVER M4",2,,,,,,,,,,,,,,,,,
6,2,,933110-00301,,"KEY ASSY",1,,,,,,,,,,,,,,,,,
7,1,,172455-17110,,"BRACKET, RELAY",1,,,,,,,,,,,,,,,,,,
8,1,,172187-17200,,"BOX, FUSE",1,,,,,,,,,,,,,,,,,
9,2,,172175-17120,,PULLER,1,,,,,,,,,,,,,,,,,
11,2,,172187-17220,,COVER,1,,,,,,,,,,,,,,,,,
12,2,,29420-050000,,HUSE,2,,,,,,,,,,,,,,,,,
13,2,,29420-150000,,HUSE,6,,,,,,,,,,,,,,,,,
14,2,,29420-300000,,"FUSE B30",2,,,,,,,,,,,,,,,,,
15,1,,172162-17400,,"LAMP COMP.,WORKING",1,,,,,,,,,,,,,,,,,
16,2,,172141-17211,,"BULB 12V55W",1,,,,,,,,,,,,,,,,,
17,2,,26013-080202,,"BOLT W/WASHER M8X20",2,,,,,,,,,,,,,,,,,
18,2,,22157-080000,,"WASHER  8",2,,,,,,,,,,,,,,,,,
19,1,,172162-17410,,"LAMP ASSY, HEADLIGHT",1,,,,,,,,,,,,,,,,,
20,2,,29220-788200,,BULB,1,,,,,,,,,,,,,,,,,
21,1,,194464-52190,,"SWITCH, SAFETY START",2,,,,,,,,,,,,,,,,,
22,1,,194151-57100,,HORN,1,,,,,,,,,,,,,,,,,
23,1,,172146-61370,,"RUBBER, SEAL",1,,,,,,,,,,,,,,,,,
24,1,,172173-76690,,"COLLAR 9>12>24",1,,,,,,,,,,,,,,,,,
25,1,,119247-77100,,"RELAY, SAFETY",3,,,,,,,,,,,,,,,,,
26,1,,129136-77200,,"RELAY, SAFETY",1,,,,,,,,,,,,,,,,,
27,1,,119650-77910,,"RELAY, GROW",1,,,,,,,,,,,,,,,,,
30,1,,22157-060000,,"WASHER  6",3,,,,,,,,,,,,,,,,,
31,1,,22217-100000,,"SPRING WASHER 10",3,,,,,,,,,,,,,,,,,
32,1,,26013-060122,,"BOLT M 6X 12",2,,,,,,,,,,,,,,,,,
33,1,,26013-060122,,"BOLT M 6X 12",1,,,,,,,,,,,,,,,,,
34,1,,26013-060162,,"BOLT M 6X 16",2,,,,,,,,,,,,,,,,,
35,1,,26013-060202,,"BOLT M 6X 20",2,,,,,,,,,,,,,,,,,
36,1,,26013-060202,,"BOLT M 6X 20",2,,,,,,,,,,,,,,,,,
37,1,,26013-060452,,"BOLT M 6X 45",1,,,,,,,,,,,,,,,,,
38,1,,26013-080162,,"BOLT W/WASHER M8X16",2,,,,,,,,,,,,,,,,,
39,1,,26116-100162,,"BOLT M10X 16 PLATED",3,,,,,,,,,,,,,,,,,
40,1,,26776-180002,,"NUT M18,LOCK",2,,,,,,,,,,,,,,,,,
```

https://truckmanualshub.com/

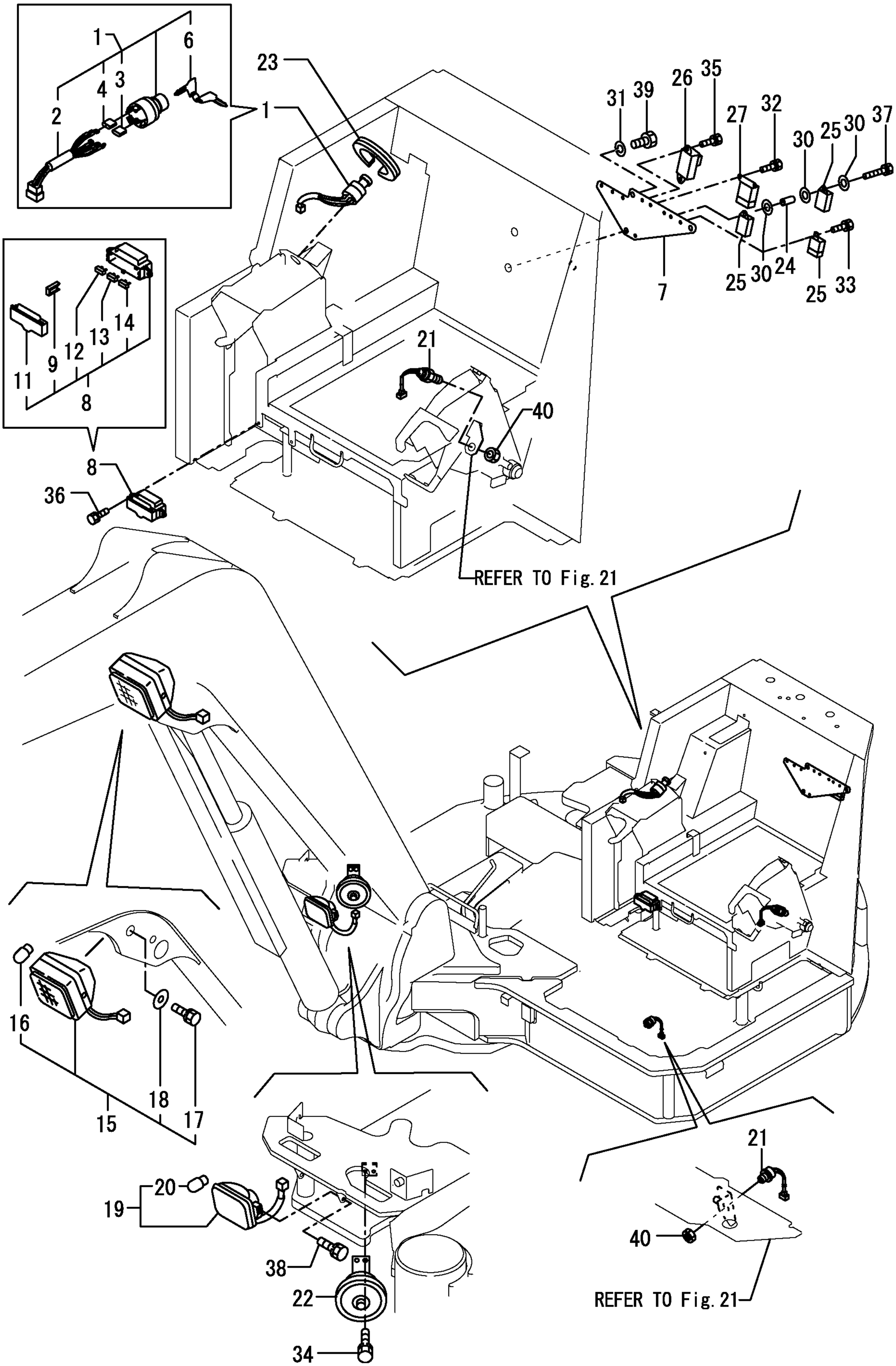

https://truckmanualshub.com/

```
1,1,,172472-17350,,"INDICATOR BOX (CABIN",1,,,,,,,,,,,,,,,,,,
4,2,,172187-17280,,"SWITCH ASSY, LIGHT",1,,,,,,,,,,,,,,,,,,
5,2,,172187-17290,,"SWITCH, HEATER",1,,,,,,,,,,,,,,,,,,
6,2,,172472-17300,,"SWITCH ASSY,WASHER",1,,,,,,,,,,,,,,,,,,
14,2,,172187-17380,,"BULB,T6.5-13.5V-2W",4,,,,,,,,,,,,,,,,,,
19,2,,172187-17480,,"BULB,T5-14V-2W",2,,,,,,,,,,,,,,,,,,
20,1,,172458-46720,,"BOLT 8X20",2,,,,,,,,,,,,,,,,,,
21,1,,172519-63240,,"BOLT  8X 16",2,,,,,,,,,,,,,,,,,,,
```

https://truckmanualshub.com/

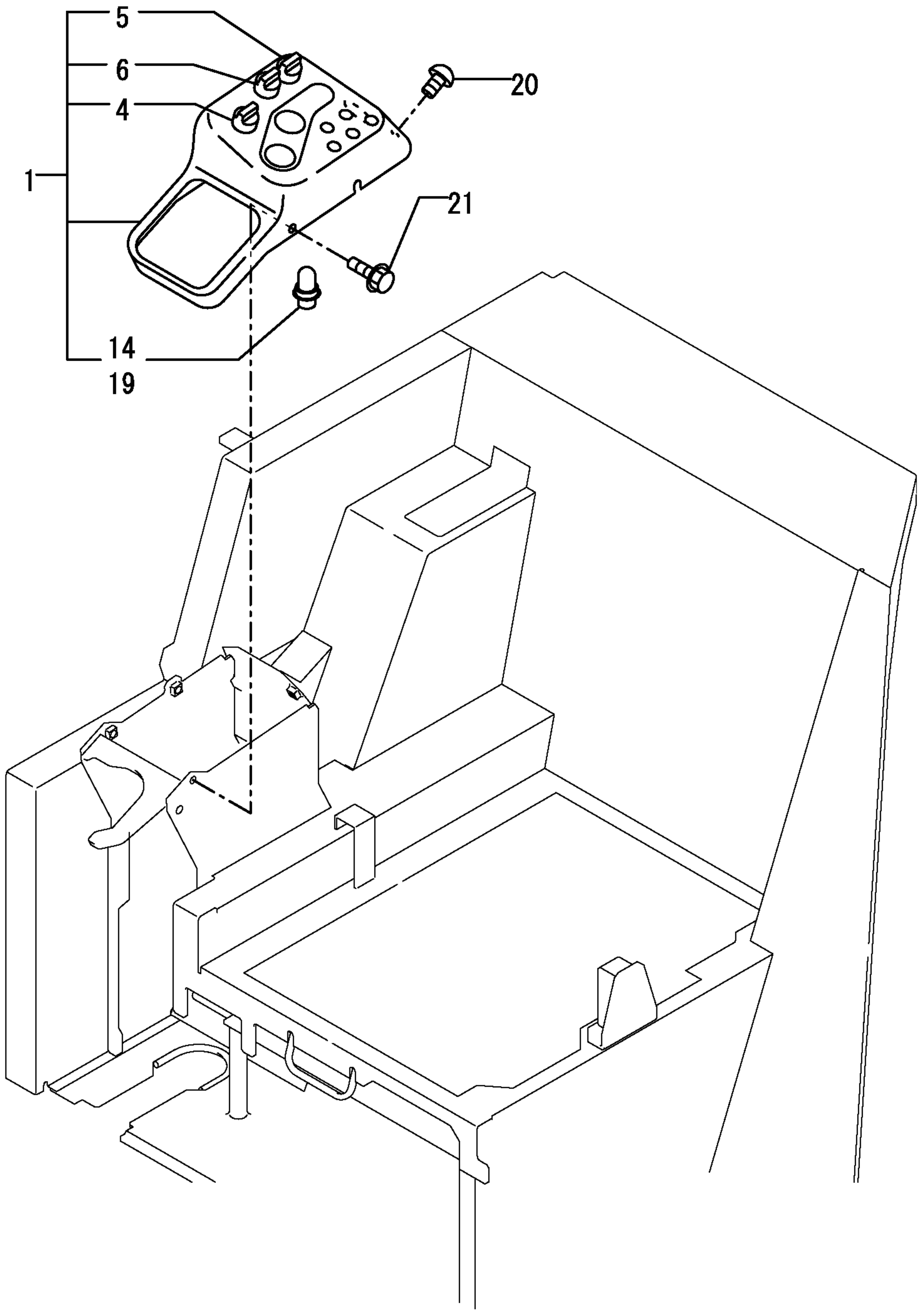

https://truckmanualshub.com/

```
1,1,,172126-11510,,"BAND 300",2,,,,,,,,,,,,,,,,,
2,1,,172162-17601,,HEATER,1,,,,,,,,,,,,,,,,,
3,1,,172455-17601,,"GUIDE ASSY, HOSE",1,,,,,,,,,,,,,,,,,
4,1,,172425-17630,,"VALVE ASSY, HEATER",1,,,,,,,,,,,,,,,,,
5,1,,172124-17640,,"JOINT 3/8",1,,,,,,,,,,,,,,,,,
6,1,,172175-17730,,"HOSE (A), HEATER",2,,,,,,,,,,,,,,,,,
9,1,,172455-64910,,"DUCT ASSY, HEATER",1,,,,,,,,,,,,,,,,,
10,2,,172455-64110,,"SEAL A, HEATER",4,,,,,,,,,,,,,,,,,
11,2,,172455-64120,,"SEAL B, HEATER",2,,,,,,,,,,,,,,,,,
12,2,,172455-64130,,"SEAL C, HEATER",2,,,,,,,,,,,,,,,,,
14,1,,172168-79520,,ELBOW,1,,,,,,,,,,,,,,,,,
15,1,,22137-100000,,"WASHER 10,POLISHED",4,,,,,,,,,,,,,,,,,
16,1,,23000-022000,,"CLAMP 22",4,,,,,,,,,,,,,,,,,
17,1,,26013-080162,,"BOLT W/WASHER M8X16",2,,,,,,,,,,,,,,,,,
18,1,,26013-100202,,"BOLT W/WASHER M10X20",4,,,,,,,,,,,,,,,,,
19,1,,26013-100202,,"BOLT W/WASHER M10X20",2,,,,,,,,,,,,,,,,,
20,1,,933152-09280,,"BAND 170",1,,,,,,,,,,,,,,,,,
21,1,,933171-15680,,"GROMMET 40X13",2,,,,,,,,,,,,,,,,,
```

https://truckmanualshub.com/

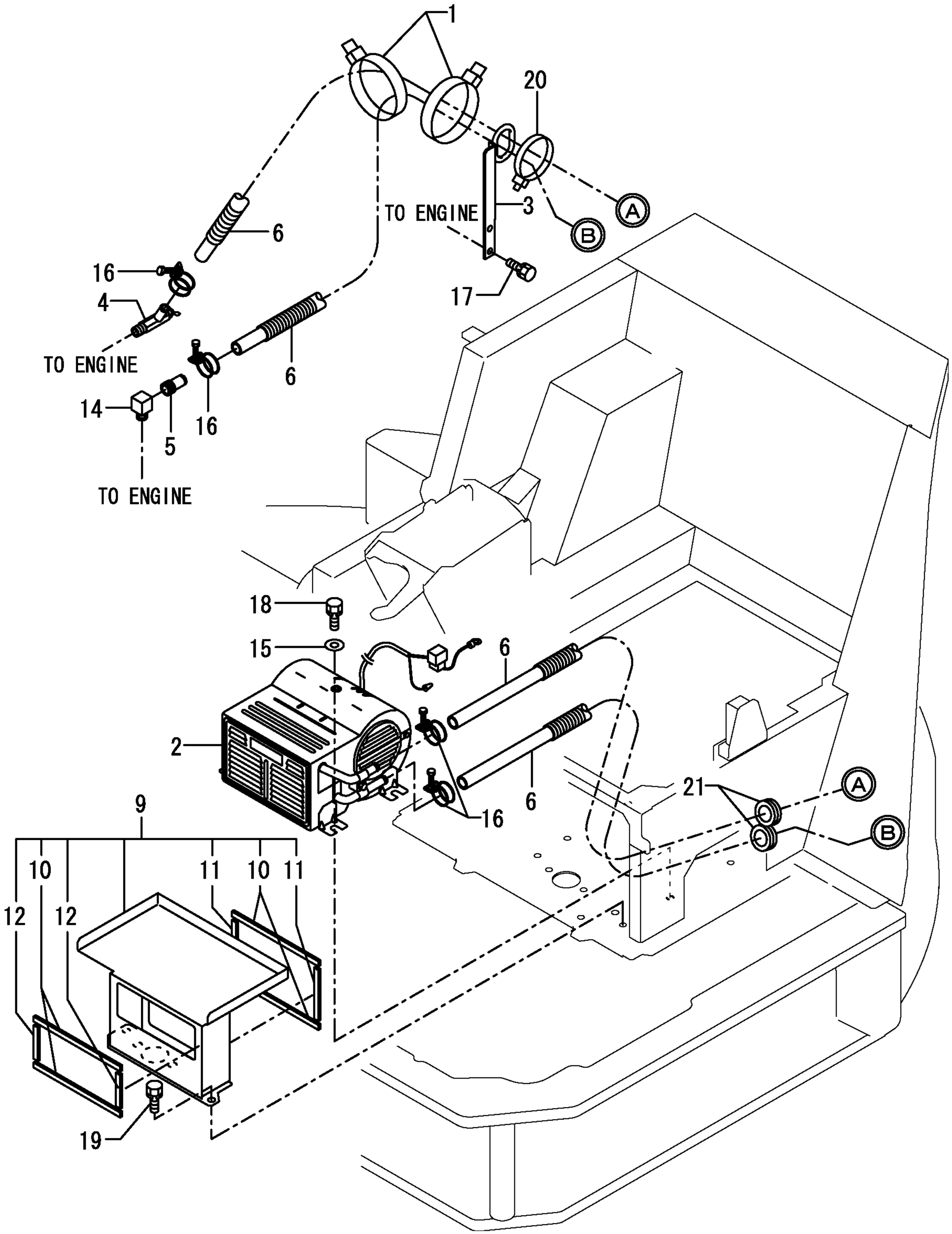

https://truckmanualshub.com/

```
1,1,,172478-16610,,"HARNESS F",1,,,,,,,,,,,,,,,,,
2,1,,172478-17600,,"BRACKET,WASHER",1,,,,,,,,,,,,,,,,,
3,1,,172472-17610,,"WASHER TANK ASSY",1,,,,,,,,,,,,,,,,,
6,2,,172472-17650,,BRACKET,1,,,,,,,,,,,,,,,,,
7,2,,22137-060000,,"WASHER 6, POLISHED",1,,,,,,,,,,,,,,,,,
8,2,,22217-060000,,"SPRING WASHER  6",2,,,,,,,,,,,,,,,,,
9,2,,26116-060162,,"BOLT 6X16",2,,,,,,,,,,,,,,,,,
10,1,,198127-86540,,"JOINT,W PIPE",1,,,,,,,,,,,,,,,,,
11,1,,26013-100162,,"BOLT M10X 16",2,,,,,,,,,,,,,,,,,
```

https://truckmanualshub.com/

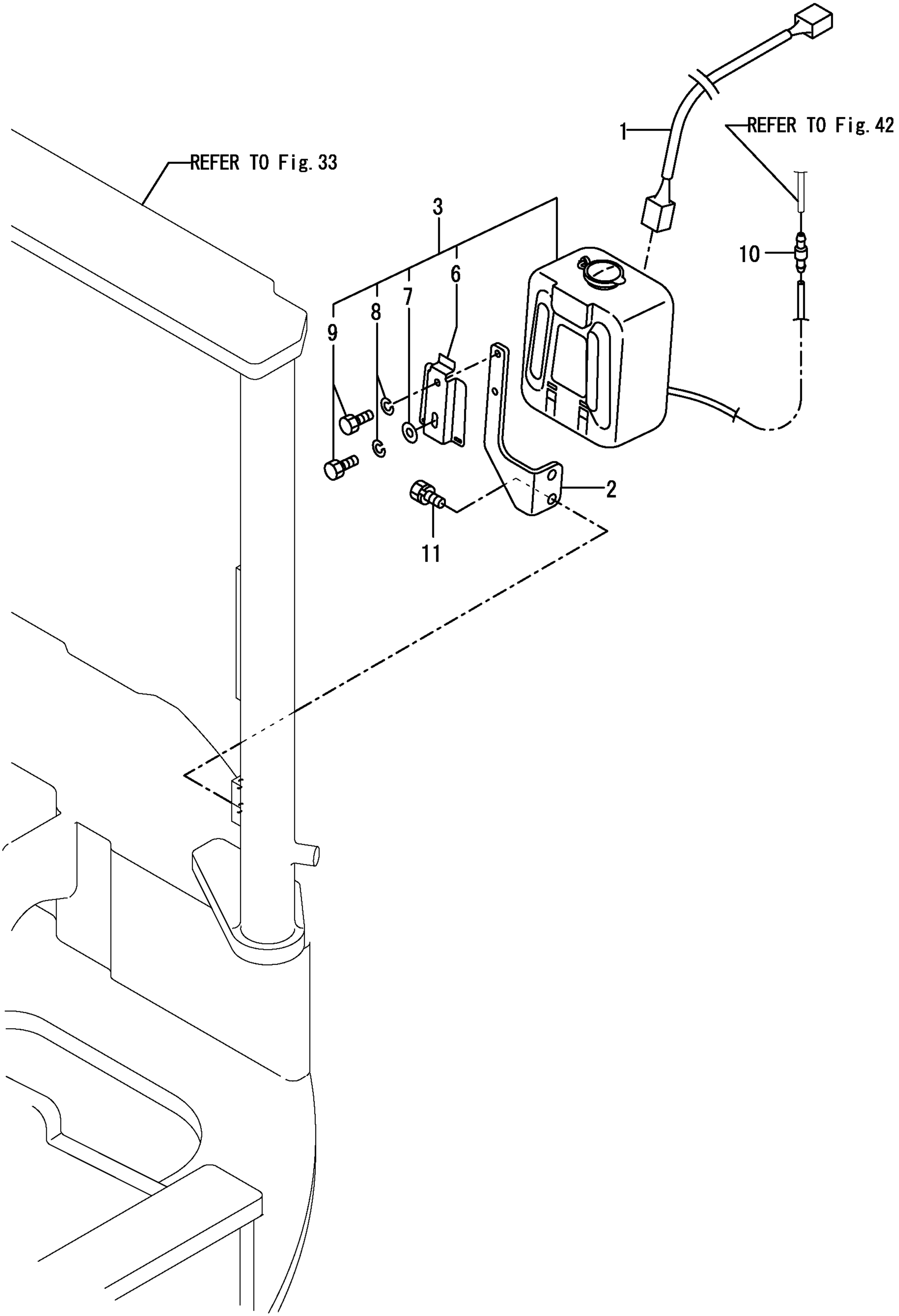

https://truckmanualshub.com/

```
1,1,,172455-17310,,"PIPE, DEFROSTER",1,,,,,,,,,,,,,,,,,
2,1,,172455-17350,,"HOSE, DEFROSTER",1,,,,,,,,,,,,,,,,,
3,1,,172455-17400,,"BRACKET, DEFROSTER",1,,,,,,,,,,,,,,,,,,
4,1,,172120-17710,,"NOZZLE, DEFROSTER",1,,,,,,,,,,,,,,,,,,
5,1,,172158-78250,,"CLAMP 45",1,,,,,,,,,,,,,,,,,
6,1,,22137-100000,,"WASHER 10,POLISHED",1,,,,,,,,,,,,,,,,,
7,1,,26013-080162,,"BOLT W/WASHER M8X16",2,,,,,,,,,,,,,,,,,
8,1,,26013-100202,,"BOLT W/WASHER M10X20",1,,,,,,,,,,,,,,,,,,
9,1,,26013-100202,,"BOLT W/WASHER M10X20",2,,,,,,,,,,,,,,,,,,
10,1,,26557-050102,,"SCREW M 5X 10",2,,,,,,,,,,,,,,,,,
11,1,,933110-58400,,"GROMMET 43",1,,,,,,,,,,,,,,,,,
```

https://truckmanualshub.com/

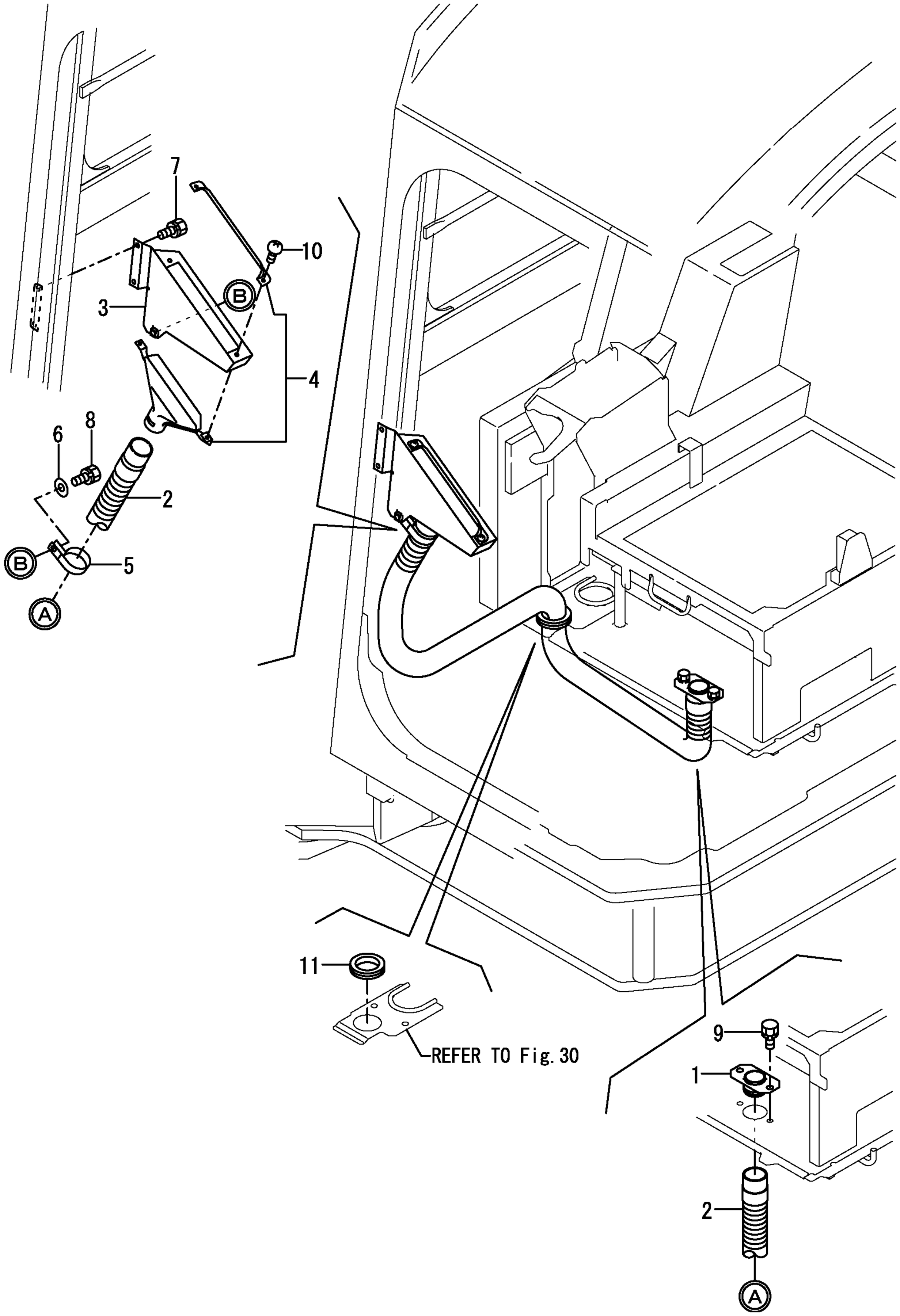

```
1,1,,172187-29101-2,,"SPROCKET  (GREEN:82)",2,,,,,,,,,,,,,,,,,
2,1,,172455-29140,,"BOLT 14X35",24,,,,,,,,,,,,,,,,,
3,1,,172455-29150,,"WASHER 14X35",24,,,,,,,,,,,,,,,,,
4,1,,172478-37300-1,,"ROLLER,LOWER(GREEN82",10,,,,,,,,,,,,,,,,,,,
6,3,,182900-55790,,BUSHING,20,,,,,,,,,,,,,,,,,
7,2,,172478-37350,,SHAFT,10,,,,,,,,,,,,,,,,,
8,2,,172478-37360,,"SEAL COVER A",10,,,,,,,,,,,,,,,,,
9,2,,172478-37370,,"SEAL COVER B",10,,,,,,,,,,,,,,,,,
10,2,,172478-37380,,"FLOATING SEAL",20,,,,,,,,,,,,,,,,,,
11,2,,22242-000320,,"CIRCLIP   32",10,,,,,,,,,,,,,,,,,
12,2,,24311-000380,,"O-RING 1A P-38.0",10,,,,,,,,,,,,,,,,,,
13,2,,933171-13691,,"PLUG PT1/8",10,,,,,,,,,,,,,,,,,
14,1,,22217-200000,,"SPRING WASHER 20",20,,,,,,,,,,,,,,,,,
15,1,,26116-200402,,"BOLT M20X40",20,,,,,,,,,,,,,,,,,
16,1,,172478-37500-1,,"ROLLER,CARRIER  (82)",2,,,,,,,,,,,,,,,,,,
18,2,,172478-37520,,"SHAFT,CARRIER ROLLER",2,,,,,,,,,,,,,,,,,
19,2,,172187-37530,,"WASHER, CARRIER",2,,,,,,,,,,,,,,,,,
20,2,,172478-37530,,"SEAL,CARRIER ROLLER",2,,,,,,,,,,,,,,,,,
21,2,,172187-37540,,"CAP, CARRIER ROLLER",2,,,,,,,,,,,,,,,,,
22,2,,22242-000300,,"CIRCLIP   30",2,,,,,,,,,,,,,,,,,
23,2,,22252-000621,,"RING   62",2,,,,,,,,,,,,,,,,,
24,2,,24105-062064,,"BALL BEARING",4,,,,,,,,,,,,,,,,,
25,2,,933171-13691,,"PLUG PT1/8",2,,,,,,,,,,,,,,,,,
26,1,,22217-160000,,"SPRING WASHER 16",2,,,,,,,,,,,,,,,,,
27,1,,26116-160852,,"BOLT M16X 85 PLATED",2,,,,,,,,,,,,,,,,,
28,1,,26716-160002,,"NUT M16",2,,,,,,,,,,,,,,,,,
```

https://truckmanualshub.com/

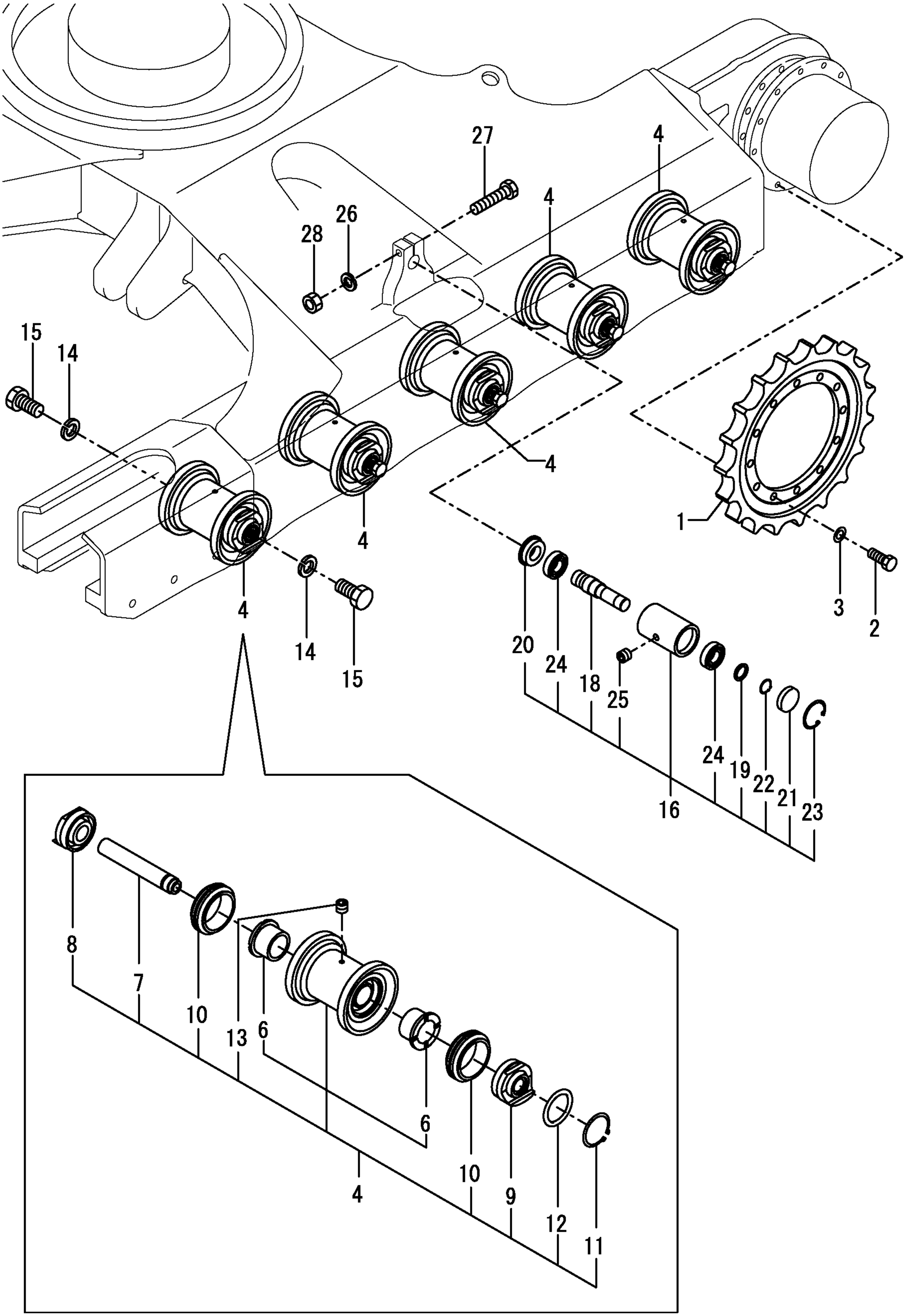

https://truckmanualshub.com/

```
1,1,,772478-37100-1,,"IDLER ASSY(GREEN:82)",2,,,,,,,1,,,,,,,,,,,
2,2,,172478-37100-1,,"IDLER ,375(GREEN:82)",2,,,,,,,,,,,,,,,,,,,
4,3,,182900-57380,,BUSHING,4,,,,,,,,,,,,,,,,,,,
5,2,,172478-37140,,"IDLER SEAL COVER,A",2,,,,,,,,,,,,,,,,,,,
6,2,,172478-37150,,"IDLER SEAL COVER,B",2,,,,,,,,,,,,,,,,,,,
7,2,,172162-37171,,"FLOATING SEAL",4,,,,,,,,,,,,,,,,,,,
8,2,,172455-37170,,SHAFT,2,,,,,,,,,,,,,,,,,,,
9,2,,172455-37180,,"SP PIN 10AWX70",2,,,,,,,,,,,,,,,,,,,
10,2,,22242-000400,,"CIRCLIP   40",2,,,,,,,,,,,,,,,,,,,
11,2,,24311-000380,,"O-RING 1A P-38.0",4,,,,,,,,,,,,,,,,,,,
12,2,,933171-13691,,"PLUG PT1/8",2,,,,,,,,,,,,,,,,,,,
13,1,,198072-17440,,"O-RING 55.0",2,,,,,,,,,,,,,,,,,,,
14,1,,172187-37700-2,,"ADJUST, CRAWLER (82)",2,,,,,,,,,,,,,,,,,,,
15,1,,172478-37710,,"RING 55,BACKUP",2,,,,,,,,,,,,,,,,,,,
16,1,,172162-37770,,"TUBE COMP.,ADJUSTER",2,,,,,,,,,,,,,,,,,,,
17,1,,172162-37800,,PISTON,2,,,,,,,,,,,,,,,,,,,
18,1,,172162-37810,,"PLATE,ADJUSTER",2,,,,,,,,,,,,,,,,,,,
19,1,,172122-37844,,"VALVE ASSY, NIPPLE",2,,,,,,,,,,,,,,,,,,,
20,2,,24315-000140,,"O-RING 1B P-14.0",2,,,,,,,,,,,,,,,,,,,
21,2,,24761-020000,,"NIPPLE PT1/8,GREASE",2,,,,,,,,,,,,,,,,,,,
22,1,,22217-140000,,"SPRING WASHER 14",8,,,,,,,,,,,,,,,,,,,
23,1,,26116-140602,,"BOLT M14X 60 PLATED",8,,,,,,,,,,,,,,,,,,,
24,1,,933126-50500,,"SEAL 5569811, DKB",2,,,,,,,,,,,,,,,,,,,
```

https://truckmanualshub.com/

When constructing Idler Assy, The direction of cutting mark of idler seal cover A & B is the opposite side concerning rubber crawler & iron crawler.

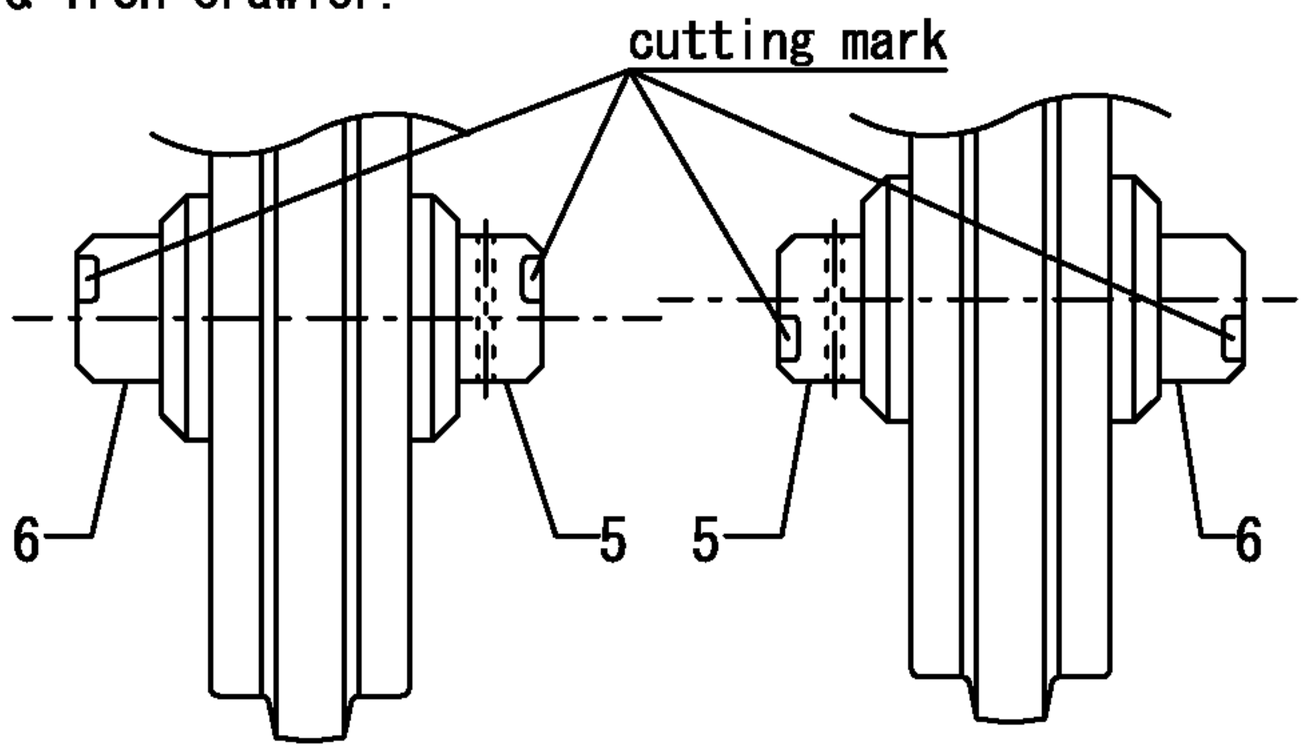

RUBBER CRAWLER SPEC. IRON CRAWLER SPEC.

VIEWED FROM Ⓐ

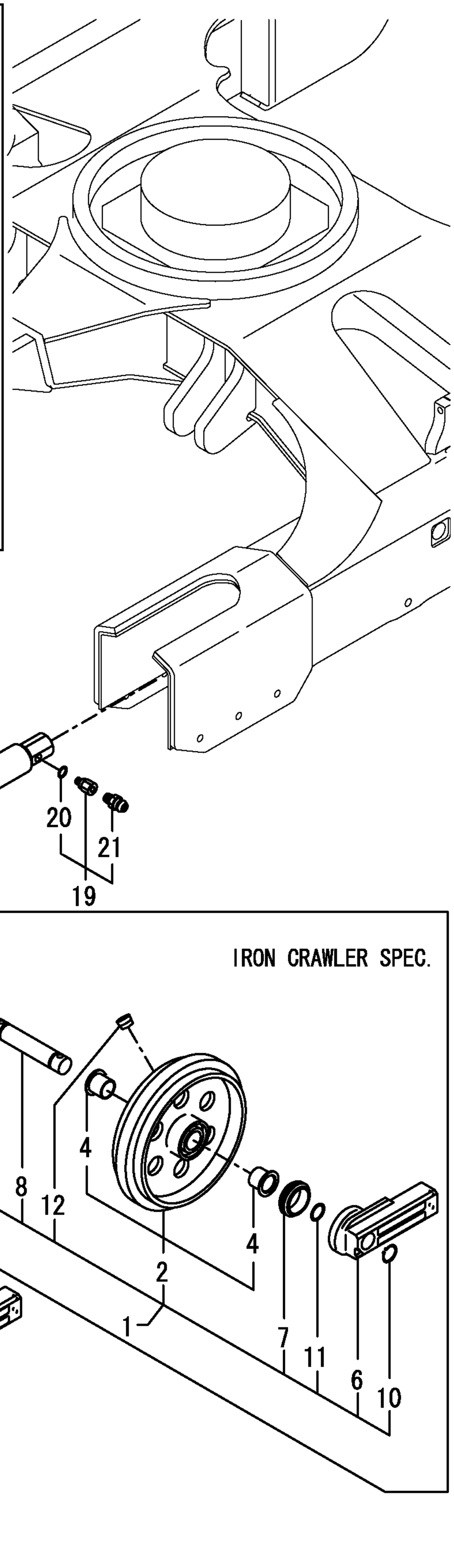

https://truckmanualshub.com/

```
1,1,,172455-38100-1,,"TRACK SHOE 450L ASSY",1,,,,,,,,,,,,,,,,,
2,2,,172455-38120,,"LINK ASSY",1,,,,,,,,,,,,,,,,
7,3,,172455-38220,,"BUSH, TRACK",38,,,,,,,,,,,,,,,,,
8,3,,172455-38230,,"PIN, TRACK",38,,,,,,,,,,,,,,,,,
9,3,,172455-38240,,"BUSH, MASTER",1,,,,,,,,,,,,,,,,,
10,3,,172455-38250,,"PIN, MASTER",1,,,,,,,,,,,,,,,,,
11,3,,172455-38260,,COLLER,2,,,,,,,,,,,,,,,,
12,3,,172455-38270,,"COTTER PIN",1,,,,,,,,,,,,,,,,,
13,3,,172455-38280,,SEAL,76,,,,,,,,,,,,,,,,,
14,2,,172455-38130-1,,"TRACK SHOE 450L (71)",39,,,,,,,,,,,,,,,,,
15,2,,172455-38160,,NUT,78,,,,,,,,,,,,,,,,,
16,2,,172455-38160,,NUT,78,,,,,,,,,,,,,,,,,
17,2,,172455-38170,,BOLT,78,,,,,,,,,,,,,,,,,
18,2,,172455-38170,,BOLT,78,,,,,,,,,,,,,,,,,
19,1,,172455-38110-1,,"TRACK SHOE 450R ASSY",1,,,,,,,,,,,,,,,,,
20,2,,172455-38120,,"LINK ASSY",1,,,,,,,,,,,,,,,,
25,3,,172455-38220,,"BUSH, TRACK",38,,,,,,,,,,,,,,,,,
26,3,,172455-38230,,"PIN, TRACK",38,,,,,,,,,,,,,,,,,
27,3,,172455-38240,,"BUSH, MASTER",1,,,,,,,,,,,,,,,,,
28,3,,172455-38250,,"PIN, MASTER",1,,,,,,,,,,,,,,,,,
29,3,,172455-38260,,COLLER,2,,,,,,,,,,,,,,,,
30,3,,172455-38270,,"COTTER PIN",1,,,,,,,,,,,,,,,,,
31,3,,172455-38280,,SEAL,76,,,,,,,,,,,,,,,,,
32,2,,172455-38140-1,,"TRACK SHOE 450R (71)",39,,,,,,,,,,,,,,,,,
33,2,,172455-38160,,NUT,78,,,,,,,,,,,,,,,,,
34,2,,172455-38160,,NUT,78,,,,,,,,,,,,,,,,,
35,2,,172455-38170,,BOLT,78,,,,,,,,,,,,,,,,,
36,2,,172455-38170,,BOLT,78,,,,,,,,,,,,,,,,,
37,1,,172455-38601,,"CRAWLER RUBBER",2,,,,,,,,,,,,,,,,,
38,1,,172455-38300-1,,"MASTER
TRACK450L(71)",1,,,,,,W,,24780170,*2003.09,,,,,,,,,,I
39,2,,172455-38130-1,,"TRACK SHOE 450L
(71)",1,,,,,,W,,24780170,*2003.09,,,,,,,,,,I
40,2,,172455-38160,,NUT,4,,,,,,W,,24780170,*2003.09,,,,,,,,,,I
41,2,,172455-38170,,BOLT,4,,,,,,W,,24780170,*2003.09,,,,,,,,,,I
44,3,,172455-38240,,"BUSH, MASTER",1,,,,,,W,,24780170,*2003.09,,,,,,,,,,I
45,1,,172455-38310-1,,"MASTER
TRACK450R(71)",1,,,,,,W,,24780170,*2003.09,,,,,,,,,,I
46,2,,172455-38140-1,,"TRACK SHOE 450R
(71)",1,,,,,,W,,24780170,*2003.09,,,,,,,,,,I
47,2,,172455-38160,,NUT,4,,,,,,W,,24780170,*2003.09,,,,,,,,,,I
48,2,,172455-38170,,BOLT,4,,,,,,W,,24780170,*2003.09,,,,,,,,,,I
51,3,,172455-38240,,"BUSH, MASTER",1,,,,,,W,,24780170,*2003.09,,,,,,,,,,I
```

https://truckmanualshub.com/

P/C NEWS No:Y00S4030-2
PUBLISHED:2003/09

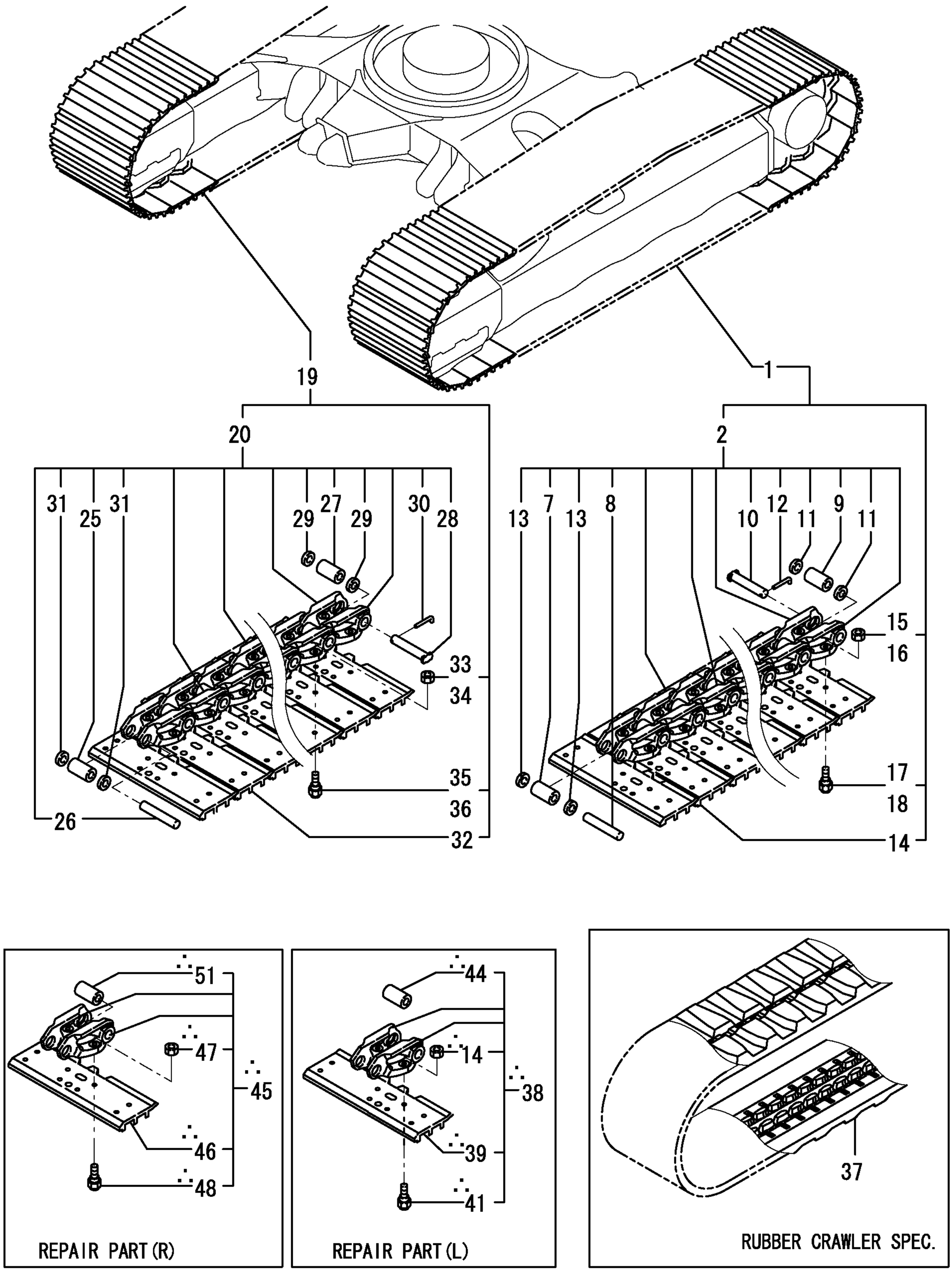

∴MARKED PART HAS BEEN CHANGED(ADDED).

```
1,1,,1D4070-23580,,"GRIP,RED ROUND",1,,,,,,,,,,,,,,,,,
2,1,,172478-45400,,"STAND,LINK(BLACK:12)",1,,,,,,,,,,,,,,,,,
3,1,,172455-45520,,"BRACKET,BOOT    (12)",1,,,,,,,,,,,,,,,,,
4,1,,172458-45850,,"GUIDE L,HOSE(GRAY:73",1,,,,,,,,,,,,,,,,,
5,1,,172124-46200,,"O-RING 27X5.7",2,,,,,,,,,,,,,,,,,
6,1,,172472-46210,,"BRACKET ASSY,R  (73)",1,,,,,,,,,,,,,,,,,
7,1,,172472-46220,,"BRACKET ASSY,L  (73)",1,,,,,,,,,,,,,,,,,
8,1,,172472-46600,,"LEVER STAND L   (73)",1,,,,,,,,,,,,,,,,,
9,2,,172141-41370,,"BUSH 2015",2,,,,,,,,,,,,,,,,,
11,2,,24550-025150,,"BUSH 25X15",2,,,,,,,,,,,,,,,,,
12,1,,172162-46690,,SPRING,1,,,,,,,,,,,,,,,,,
13,1,,172455-46890,,"SPRING,GAS",1,,,,,,,,,,,,,,,,,
14,1,,172455-46950,,"BRACKET, SWITCH",1,,,,,,,,,,,,,,,,,
15,1,,172165-47550,,BUSH,1,,,,,,,,,,,,,,,,,
16,1,,172478-47600,,"GUIDE L,LOCK(GRAY:72",1,,,,,,,,,,,,,,,,,
17,1,,172478-47620,,"LEVER L,LOCK(GRAY:72",1,,,,,,,,,,,,,,,,,
18,1,,172458-47640-4,,"ROD,SPRING (GRAY:72)",1,,,,,,,,,,,,,,,,,
19,1,,172165-47980,,"SHIM 42X25.5X0.5",2,,,,,,,,,,,,,,,,,
20,1,,172165-47990,,"WASHER 25.5X42",1,,,,,,,,,,,,,,,,,
21,1,,22137-080000,,"WASHER 8, POLISHED",2,,,,,,,,,,,,,,,,,
22,1,,22137-080000,,"WASHER 8, POLISHED",2,,,,,,,,,,,,,,,,,
23,1,,22137-080000,,"WASHER 8, POLISHED",2,,,,,,,,,,,,,,,,,
24,1,,22242-000250,,"CIRCLIP 25S",1,,,,,,,,,,,,,,,,,
25,1,,22272-000070,,"CIRCLIP E- 7",1,,,,,,,,,,,,,,,,,
26,1,,22351-035040,,"SPRING PIN 3.5X40",1,,,,,,,,,,,,,,,,,
27,1,,22351-060040,,"SPRING PIN 6X40",1,,,,,,,,,,,,,,,,,
28,1,,22417-200200,,"COTTER PIN 2.0X20",2,,,,,,,,,,,,,,,,,
29,1,,24311-000340,,"O-RING 1A P-34.0",2,,,,,,,,,,,,,,,,,
30,1,,24761-050000,,"NIPPLE C,GREASE",2,,,,,,,,,,,,,,,,,
31,1,,26013-080162,,"BOLT W/WASHER M8X16",2,,,,,,,,,,,,,,,,,
32,1,,26013-080162,,"BOLT W/WASHER M8X16",2,,,,,,,,,,,,,,,,,
33,1,,26013-080202,,"BOLT W/WASHER M8X20",2,,,,,,,,,,,,,,,,,
34,1,,26013-080202,,"BOLT W/WASHER M8X20",6,,,,,,,,,,,,,,,,,
35,1,,26013-100202,,"BOLT W/WASHER M10X20",6,,,,,,,,,,,,,,,,,
36,1,,26013-100202,,"BOLT W/WASHER M10X20",2,,,,,,,,,,,,,,,,,
```

https://truckmanualshub.com/

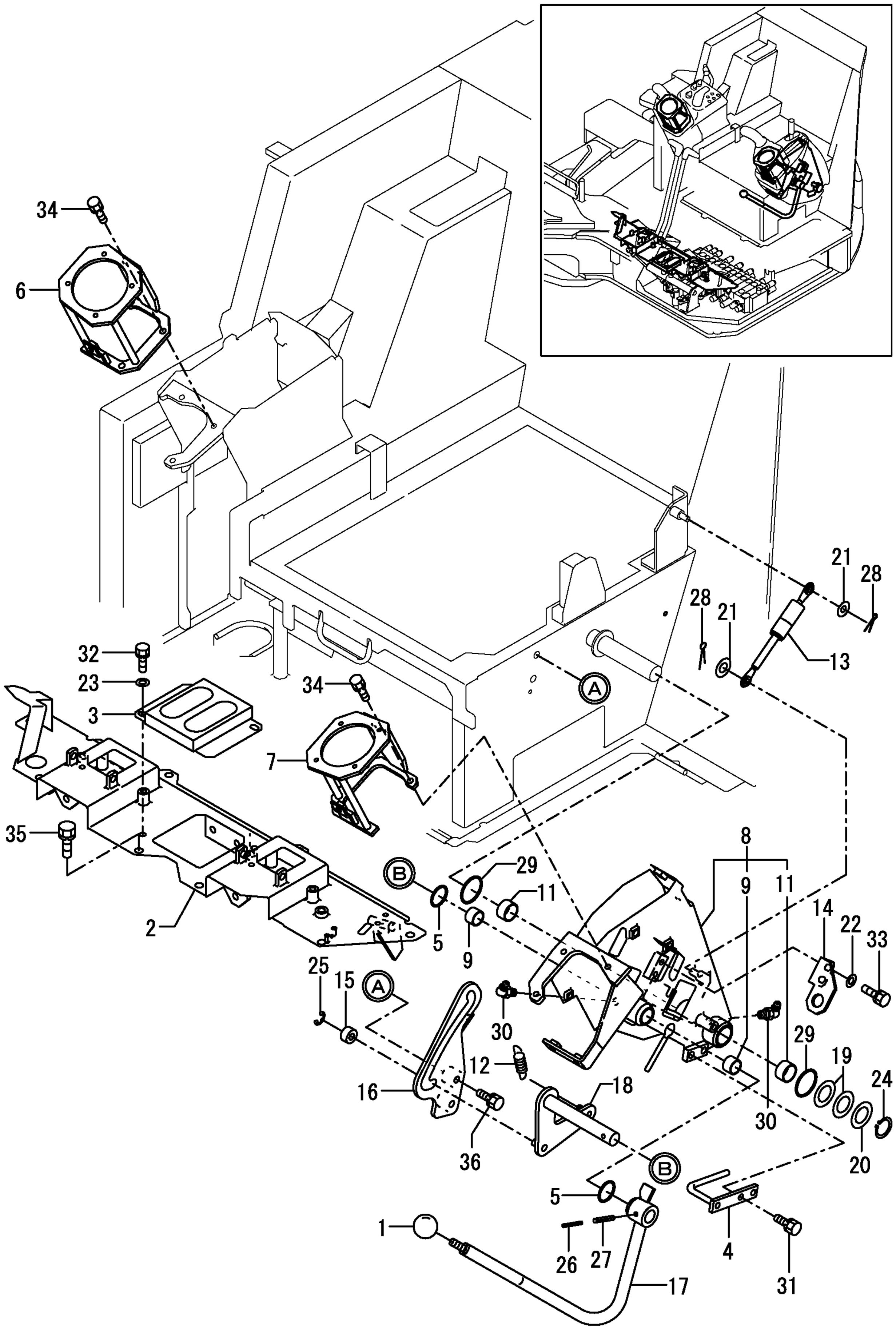

https://truckmanualshub.com/

```
1,1,,172141-41340,,BOOTS,2,,,,,,,,,,,,,,,,,,
2,1,,172455-45101,,"LEVER L ASSY, TRACK",1,,,,,,,,,,,,,,,,,,
3,2,,172141-41370,,"BUSH 2015",2,,,,,,,,,,,,,,,,,,
5,1,,172455-45131,,"LEVER R ASSY, TRACK",1,,,,,,,,,,,,,,,,,,
6,2,,172141-41370,,"BUSH 2015",2,,,,,,,,,,,,,,,,,,
8,1,,172187-45870,,"GRIP L, DRIVE",1,,,,,,,,,,,,,,,,,,
9,1,,172187-45880,,"GRIP R, DRIVE",1,,,,,,,,,,,,,,,,,,
10,1,,172124-46200,,"O-RING 27X5.7",3,,,,,,,,,,,,,,,,,,
11,1,,22117-040000,,"WASHER  4",2,,,,,,,,,,,,,,,,,,
12,1,,24761-020000,,"NIPPLE PT1/8,GREASE",2,,,,,,,,,,,,,,,,,,
13,1,,26116-100504,,"BOLT M10X 50 PLATED",4,,,,,,,,,,,,,,,,,,
14,1,,26587-040122,,"SCREW M 4X 12",2,,,,,,,,,,,,,,,,,,
15,1,,26716-100002,,"NUT 10",4,,,,,,,,,,,,,,,,,,
16,1,,172455-45151,,"SHAFT ASSY, TRACK",1,,,,,,,,,,,,,,,,,,
17,1,,26013-100252,,"BOLT W/WASHER M10X25",2,,,,,,,,,,,,,,,,,,
18,1,,172187-45220-1,,"PEDALL CMP (GRAY:72)",1,,,,,,,,,,,,,,,,,,
19,1,,172187-45250,,"PEDAL PAD L",1,,,,,,,,,,,,,,,,,,
20,1,,172187-45260-1,,"PEDAL R CMP(GRAY:72)",1,,,,,,,,,,,,,,,,,,
21,1,,172187-45280,,"PEDAL PAD R",1,,,,,,,,,,,,,,,,,,
22,1,,26013-060302,,"BOLT M 6X 30",4,,,,,,,,,,,,,,,,,,
23,1,,172162-46210,,"ROD 98.5",2,,,,,,,,,,,,,,,,,,
24,1,,172122-46590,,"ELBALL 8",2,,,,,,,,,,,,,,,,,,
25,1,,22137-080000,,"WASHER 8, POLISHED",2,,,,,,,,,,,,,,,,,,
26,1,,22417-160160,,"COTTER PIN 1.6X16",2,,,,,,,,,,,,,,,,,,
27,1,,26051-080002,,"NUT M 8",4,,,,,,,,,,,,,,,,,,
28,1,,933110-54100,,"PIN 4.75X14",2,,,,,,,,,,,,,,,,,,
```

https://truckmanualshub.com/

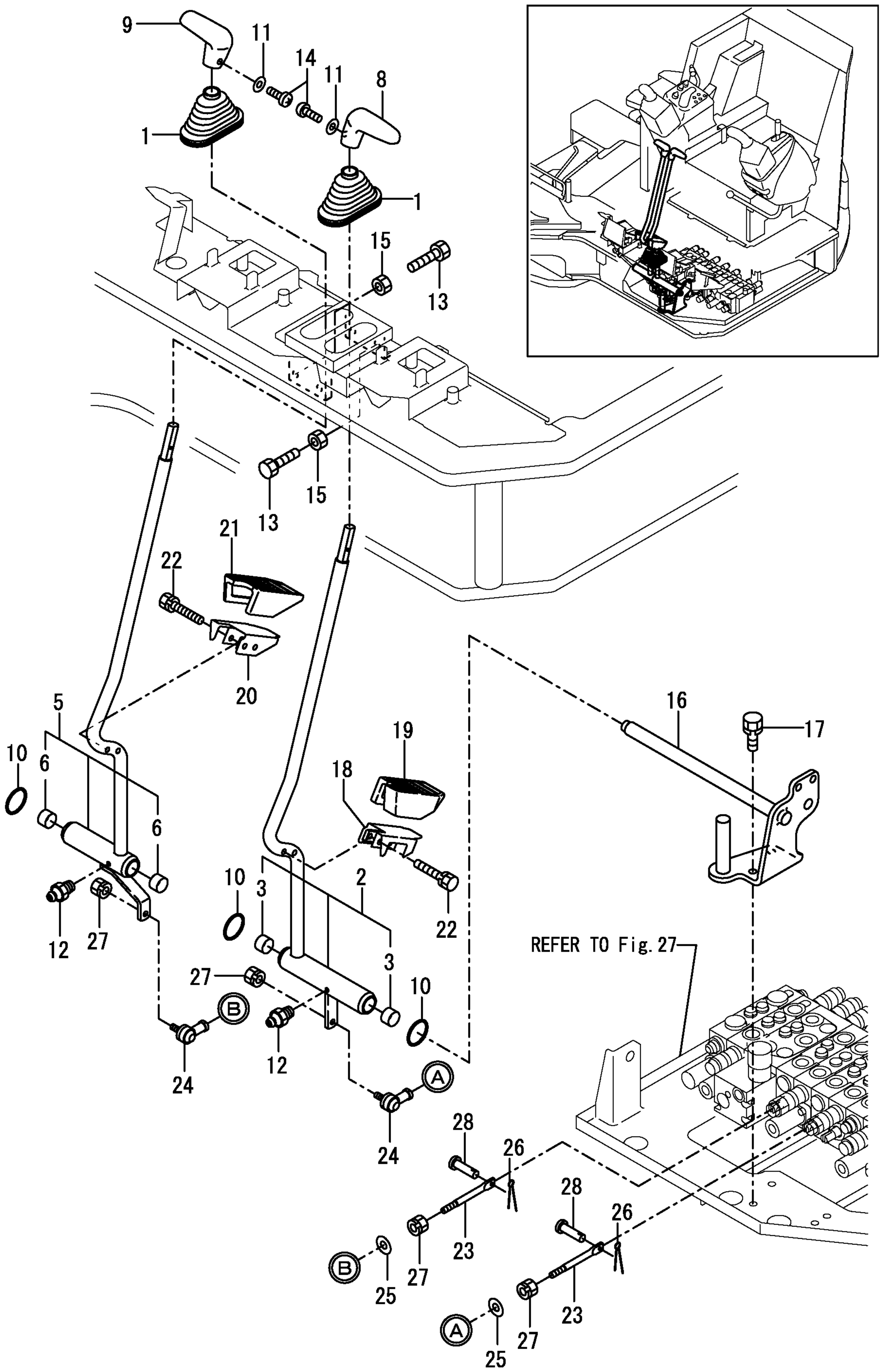

https://truckmanualshub.com/

```
1,1,,172964-12140,,GRIP(BLACK,1,,,,,,,,,,,,,,,,,
2,1,,172478-45100,,"LEVER,BLADE(GRAY:72)",1,,,,,,,,,,,,,,,,,
3,1,,26116-100354,,"BOLT M10X 35 PLATED",2,,,,,,,,,,,,,,,,,
4,1,,26716-100002,,"NUT 10",2,,,,,,,,,,,,,,,,,
5,1,,1A1040-43900,,"SPRING WASHER",1,,,,,,,,,,,,,,,,,
6,1,,22217-080000,,"SPRING WASHER  8",1,,,,,,,,,,,,,,,,,
7,1,,24311-000210,,"O-RING 1A P-21.0",2,,,,,,,,,,,,,,,,,
8,1,,26116-080202,,"BOLT M 8X 20 PLATED",1,,,,,,,,,,,,,,,,,
9,1,,172455-45800,,"CABLE, BLADE",1,,,,,,,,,,,,,,,,,
10,1,,22417-160160,,"COTTER PIN 1.6X16",1,,,,,,,,,,,,,,,,,
11,1,,26051-080002,,"NUT M 8",1,,,,,,,,,,,,,,,,,
12,1,,933110-54100,,"PIN 4.75X14",1,,,,,,,,,,,,,,,,,
```

https://truckmanualshub.com/

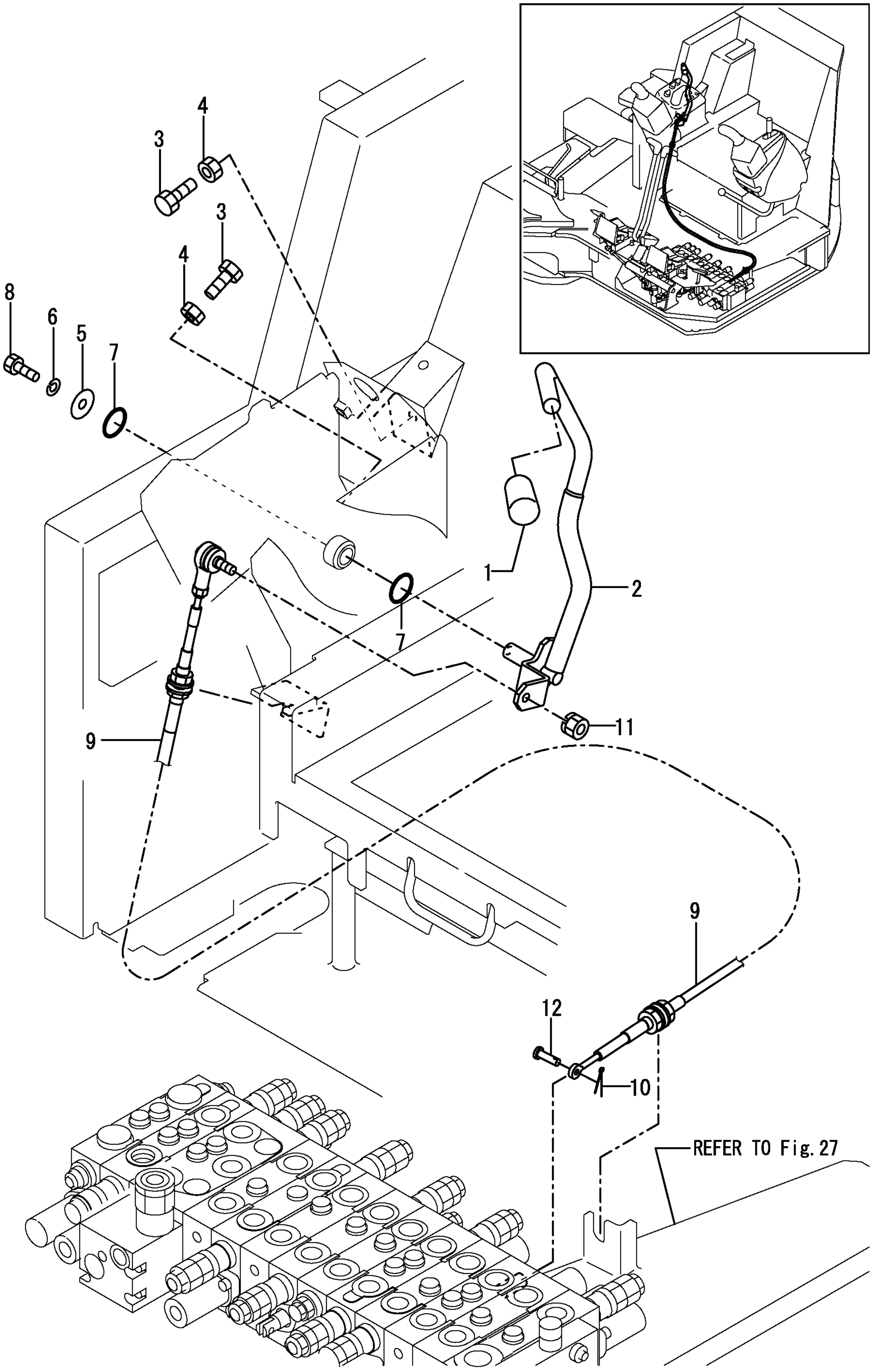

```
1,1,,172455-45170,,"LINK ASSY, SWING",1,,,,,,,,,,,,,,,,,
2,2,,172141-41370,,"BUSH 2015",2,,,,,,,,,,,,,,,,,
4,1,,172445-45550,,"LINK,PEDAL",1,,,,,,,,,,,,,,,,,
5,2,,172141-41360,,"BUSH 1415",2,,,,,,,,,,,,,,,,,
7,1,,172444-45850,,SHAFT,1,,,,,,,,,,,,,,,,,
8,1,,1A1040-45890,,"WASHER 10 36 4.5",1,,,,,,,,,,,,,,,,,
9,1,,172124-46200,,"O-RING 27X5.7",2,,,,,,,,,,,,,,,,,
10,1,,22217-100000,,"SPRING WASHER 10",1,,,,,,,,,,,,,,,,,
11,1,,24311-000210,,"O-RING 1A P-21.0",2,,,,,,,,,,,,,,,,,
12,1,,24761-040000,,"NIPPLE B,GREASE",1,,,,,,,,,,,,,,,,,
13,1,,24761-050000,,"NIPPLE C,GREASE",1,,,,,,,,,,,,,,,,,
14,1,,26013-080162,,"BOLT W/WASHER M8X16",2,,,,,,,,,,,,,,,,,
15,1,,26116-080254,,"BOLT M 8X 25 PLATED",2,,,,,,,,,,,,,,,,,
16,1,,26116-100202,,"BOLT M10X 20 PLATED",1,,,,,,,,,,,,,,,,,
17,1,,26716-080002,,"NUT M 8",2,,,,,,,,,,,,,,,,,
18,1,,172187-45500-4,,"PEDAL,SWING(GRAY:72)",1,,,,,,,,,,,,,,,,,
19,1,,172187-45650,,"SHAFT, PEDAL COVER",1,,,,,,,,,,,,,,,,,
20,1,,172187-45720-4,,"COVER,PEDAL(GRAY:72)",1,,,,,,,,,,,,,,,,,
21,1,,172187-45760,,"COVER PAD",1,,,,,,,,,,,,,,,,,
22,1,,172157-45990,,"BOOTS, PEDAL",1,,,,,,,,,,,,,,,,,
23,1,,172165-46340,,BOLT,2,,,,,,,,,,,,,,,,,
24,1,,22137-100000,,"WASHER 10,POLISHED",2,,,,,,,,,,,,,,,,,
25,1,,22417-250200,,"COTTER PIN 2.5X20",2,,,,,,,,,,,,,,,,,
26,1,,194200-37780,,"LS-NUT 8",1,,,,,,,,,,,,,,,,,
27,1,,172734-41300,,"LINK BALL 8L",1,,,,,,,,,,,,,,,,,
28,1,,172142-43540,,"ROD 140",1,,,,,,,,,,,,,,,,,
29,1,,172455-45550,,"ROD 250 M8LR",1,,,,,,,,,,,,,,,,,
30,1,,172122-46590,,"ELBALL 8",2,,,,,,,,,,,,,,,,,
31,1,,22137-080000,,"WASHER 8, POLISHED",3,,,,,,,,,,,,,,,,,
32,1,,22217-080000,,"SPRING WASHER  8",1,,,,,,,,,,,,,,,,,
33,1,,22417-160160,,"COTTER PIN 1.6X16",1,,,,,,,,,,,,,,,,,
34,1,,26051-080002,,"NUT M 8",5,,,,,,,,,,,,,,,,,
35,1,,933110-54100,,"PIN 4.75X14",1,,,,,,,,,,,,,,,,,
```

https://truckmanualshub.com/

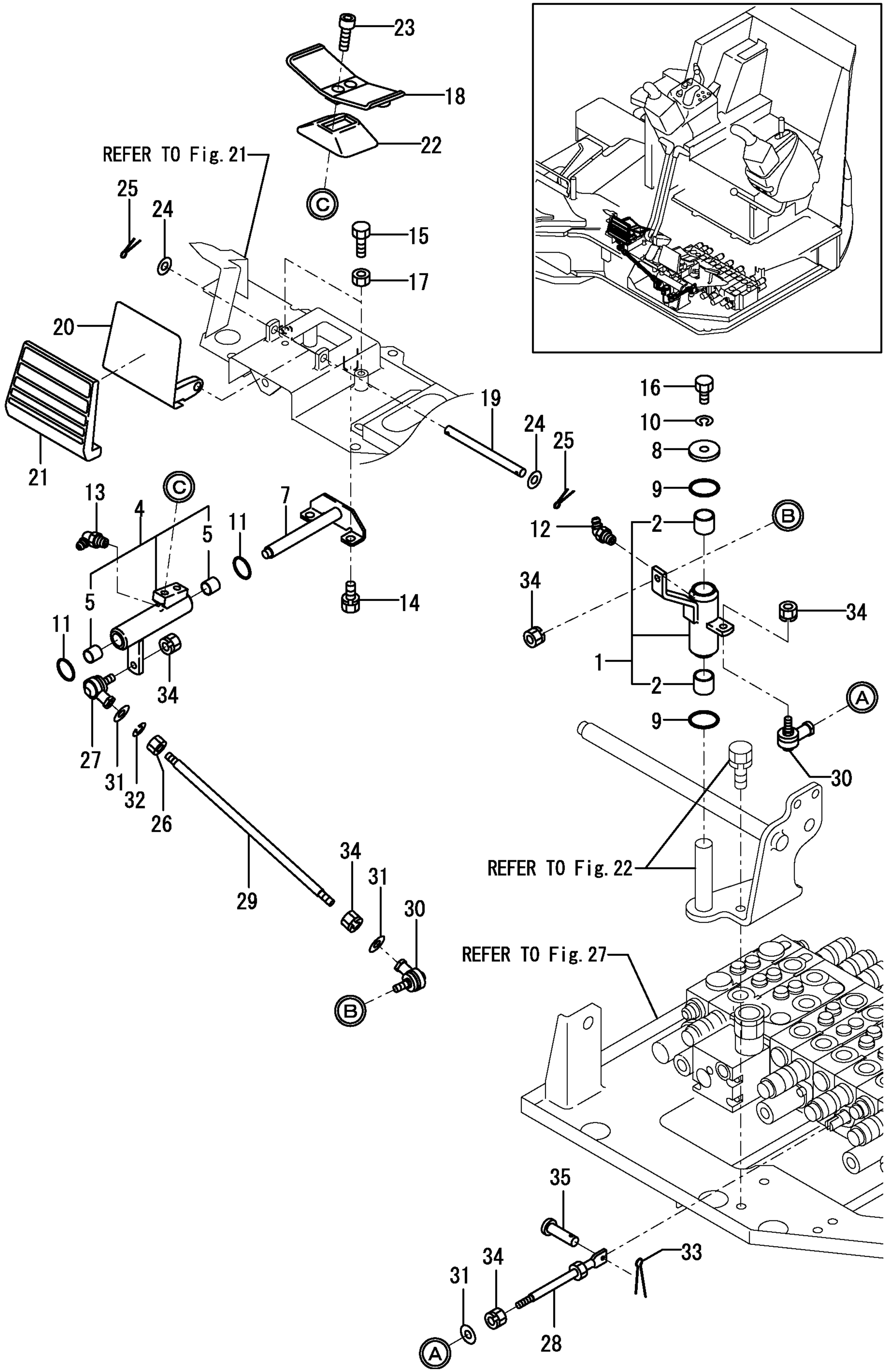

https://truckmanualshub.com/

```
1,1,,172162-12480,,"SPRING,RETURN",1,,,,,,,,,,,,,,,,,
2,1,,1A1040-43900,,"SPRING WASHER",1,,,,,,,,,,,,,,,,,
3,1,,172472-45900,,"PEDAL,LO-HI(GRAY:72)",1,,,,,,,,,,,,,,,,,,
4,1,,172458-45920,,"BRACKET,PEDAL(GRAY72",1,,,,,,,,,,,,,,,,,,
5,2,,172141-41360,,"BUSH 1415",2,,,,,,,,,,,,,,,,,
7,1,,172458-45950,,"PAD,PEDAL",1,,,,,,,,,,,,,,,,,
8,1,,24311-000210,,"O-RING 1A P-21.0",2,,,,,,,,,,,,,,,,,
9,1,,26013-080162,,"BOLT W/WASHER M8X16",2,,,,,,,,,,,,,,,,,
10,1,,26013-080202,,"BOLT W/WASHER M8X20",1,,,,,,,,,,,,,,,,,,
```

https://truckmanualshub.com/

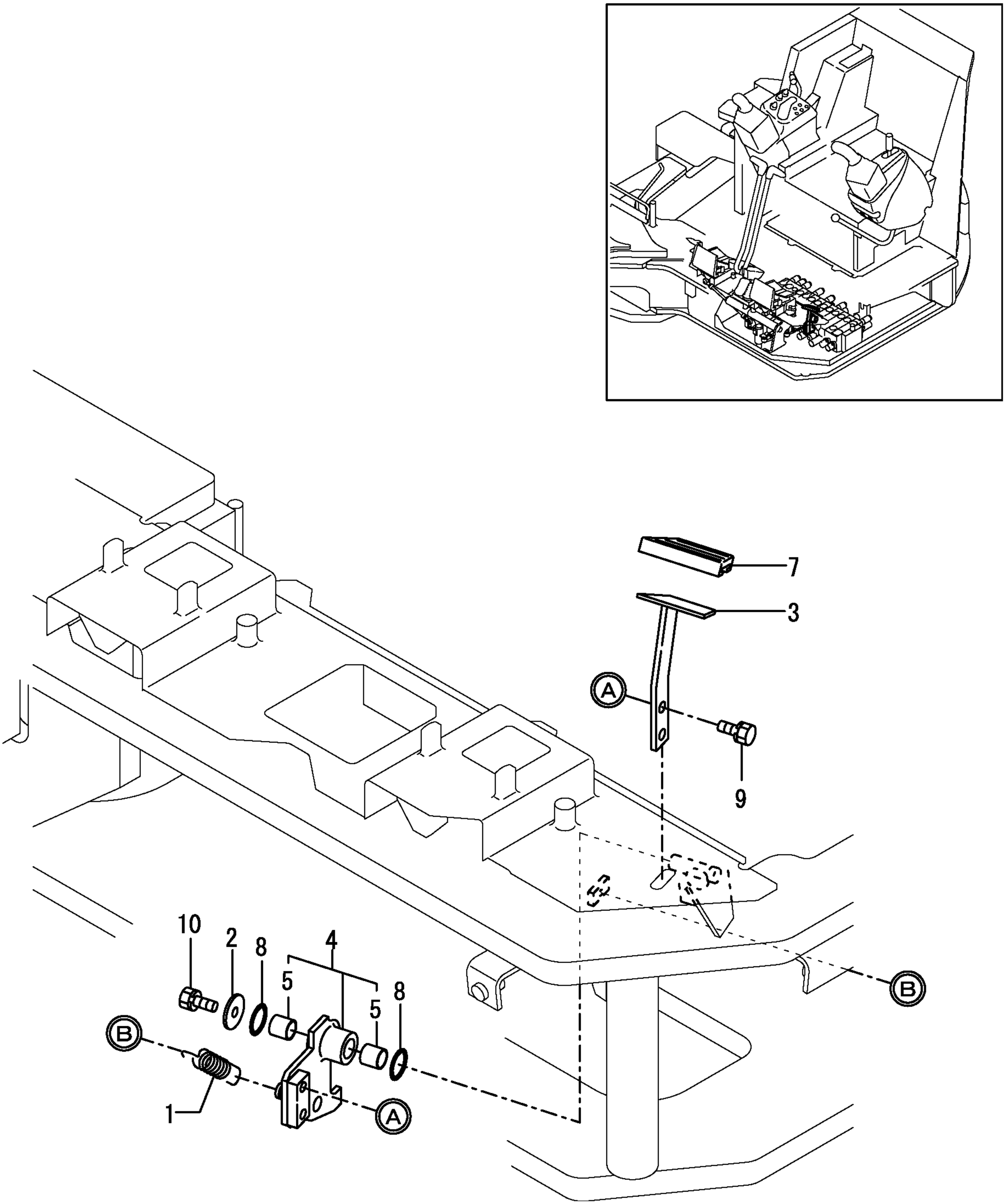

```
1,1,,172068-28490,,"SPRING  8",2,,,,,,,,,,,,,,,,,
2,1,,194200-37780,,"LS-NUT 8",1,,,,,,,,,,,,,,,,,
3,1,,172734-41300,,"LINK BALL 8L",1,,,,,,,,,,,,,,,,,,
4,1,,172732-42450,,ROD,1,,,,,,,,,,,,,,,,,
5,1,,172187-45500-4,,"PEDAL,SWING(GRAY:72)",1,,,,,,,,,,,,,,,,,
6,1,,172445-45550,,"LINK,PEDAL",1,,,,,,,,,,,,,,,,,
7,2,,172141-41360,,"BUSH 1415",2,,,,,,,,,,,,,,,,,
9,1,,172187-45650,,"SHAFT, PEDAL COVER",1,,,,,,,,,,,,,,,,,
10,1,,172187-45720-4,,"COVER,PEDAL(GRAY:72)",1,,,,,,,,,,,,,,,,,,
11,1,,172187-45760,,"COVER PAD",1,,,,,,,,,,,,,,,,,
12,1,,172448-45800,,"PLATE,LOCK(PTO  (11)",1,,,,,,,,,,,,,,,,,
13,1,,172444-45850,,SHAFT,1,,,,,,,,,,,,,,,,,
14,1,,1A1040-45890,,"WASHER 10 36 4.5",1,,,,,,,,,,,,,,,,,
15,1,,172157-45990,,"BOOTS, PEDAL",1,,,,,,,,,,,,,,,,,
16,1,,172478-46100,,"LINK ASSY,P.T.O.",1,,,,,,,,,,,,,,,,,
17,2,,172141-41370,,"BUSH 2015",2,,,,,,,,,,,,,,,,,
19,1,,172478-46150,,"SHAFT,P.T.O.",1,,,,,,,,,,,,,,,,,
20,1,,172124-46200,,"O-RING 27X5.7",2,,,,,,,,,,,,,,,,,
21,1,,172462-46230,,"BOLT 8X10",1,,,,,,,,,,,,,,,,,
22,1,,172165-46340,,BOLT,2,,,,,,,,,,,,,,,,,
23,1,,172151-46360,,"ROD, SPOOL",1,,,,,,,,,,,,,,,,,
24,1,,172122-46590,,"ELBALL 8",2,,,,,,,,,,,,,,,,,
25,1,,22137-080000,,"WASHER 8, POLISHED",3,,,,,,,,,,,,,,,,,
26,1,,22137-080000,,"WASHER 8, POLISHED",1,,,,,,,,,,,,,,,,,
27,1,,22137-100000,,"WASHER 10,POLISHED",2,,,,,,,,,,,,,,,,,
28,1,,22217-080000,,"SPRING WASHER  8",1,,,,,,,,,,,,,,,,,
29,1,,22417-160160,,"COTTER PIN 1.6X16",1,,,,,,,,,,,,,,,,,
30,1,,22417-250200,,"COTTER PIN 2.5X20",2,,,,,,,,,,,,,,,,,
31,1,,24311-000210,,"O-RING 1A P-21.0",2,,,,,,,,,,,,,,,,,
32,1,,24761-050000,,"NIPPLE C,GREASE",2,,,,,,,,,,,,,,,,,
33,1,,26013-080162,,"BOLT W/WASHER M8X16",2,,,,,,,,,,,,,,,,,
34,1,,26013-100202,,"BOLT W/WASHER M10X20",2,,,,,,,,,,,,,,,,,
35,1,,26013-100202,,"BOLT W/WASHER M10X20",1,,,,,,,,,,,,,,,,,
36,1,,26051-080002,,"NUT M 8",5,,,,,,,,,,,,,,,,,
37,1,,26116-080254,,"BOLT M 8X 25 PLATED",2,,,,,,,,,,,,,,,,,
38,1,,26347-080002,,"U-NUT  8",1,,,,,,,,,,,,,,,,,
39,1,,26716-080002,,"NUT M 8",2,,,,,,,,,,,,,,,,,
40,1,,26716-100002,,"NUT 10",1,,,,,,,,,,,,,,,,,
41,1,,933110-54100,,"PIN 4.75X14",1,,,,,,,,,,,,,,,,,
```

https://truckmanualshub.com/

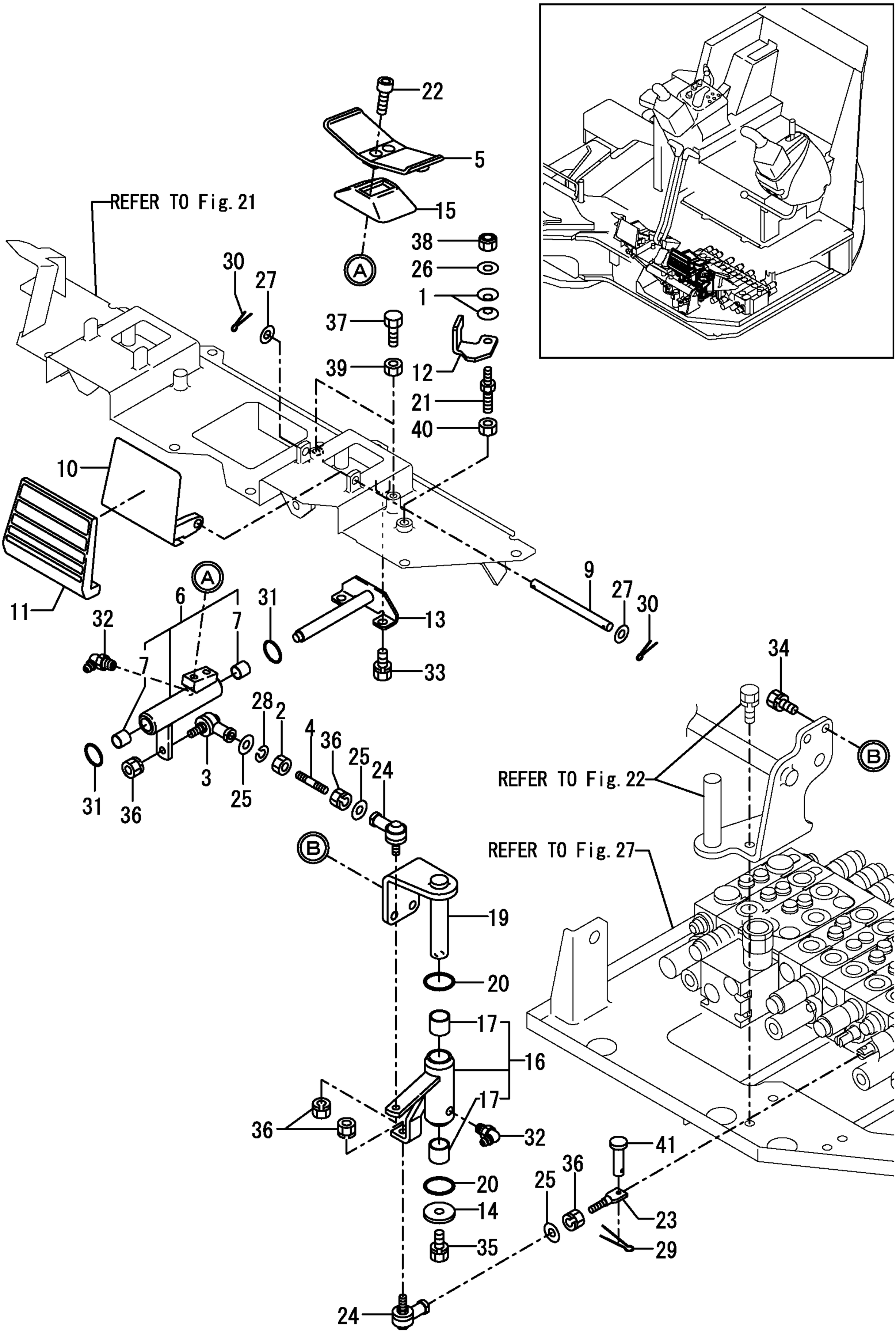

https://truckmanualshub.com/

```
1,1,,172187-45060,,"CUSHION L ASSY",2,,,,,,,,,,,,,,,,,,
2,1,,172187-45490,,CUSSHION,3,,,,,,,,,,,,,,,,,,
3,1,,172478-45600,,"PLATE,VALVE",1,,,,,,,,,,,,,,,,,,
4,1,,22242-000350,,"CIRCLIP   35",5,,,,,,,,,,,,,,,,,,
5,1,,26106-100352,,"BOLT M10X 35 PLATED",3,,,,,,,,,,,,,,,,,,
6,1,,26106-100552,,"BOLT M10X 55 PLATED",2,,,,,,,,,,,,,,,,,,
```

https://truckmanualshub.com/

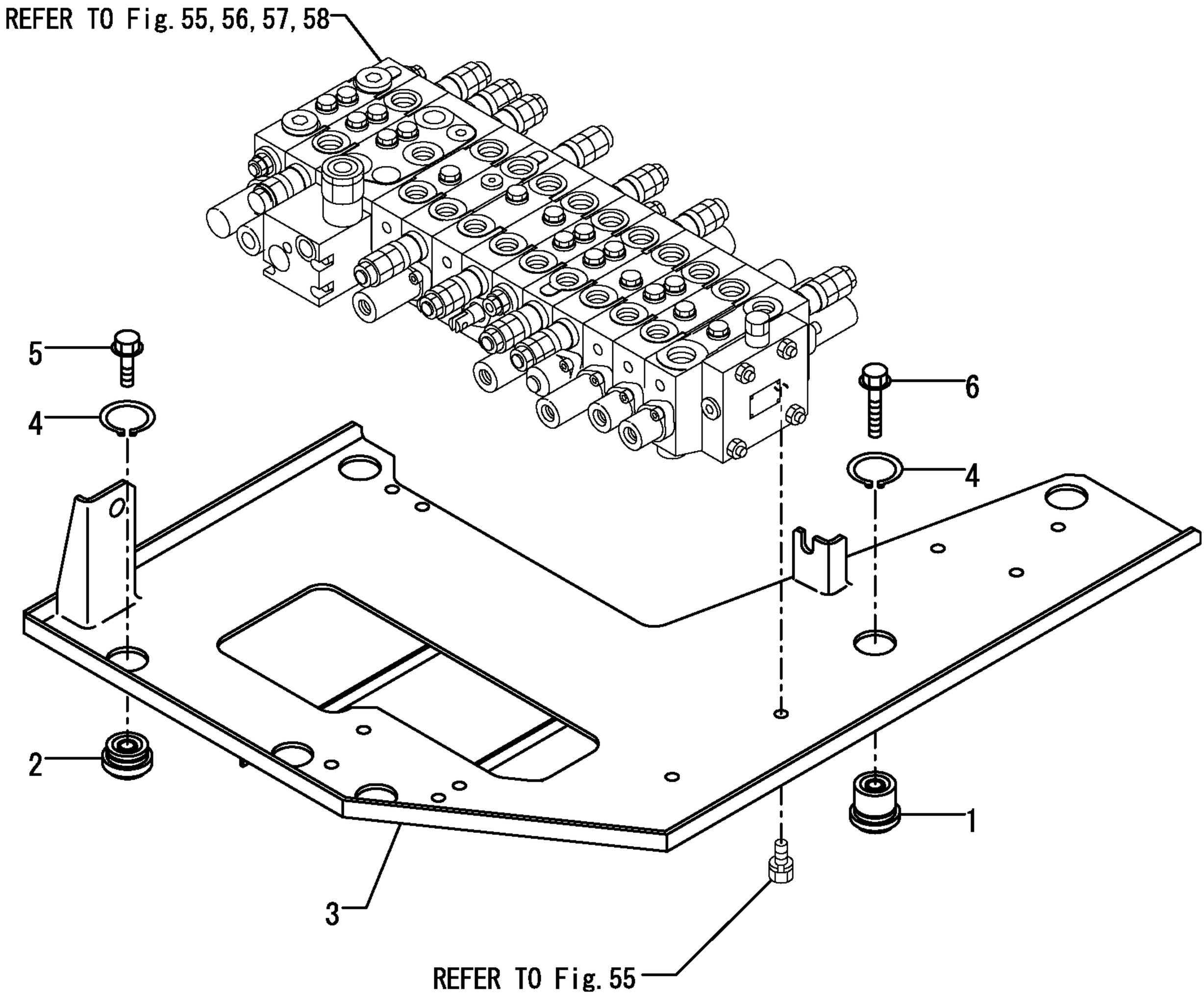

https://truckmanualshub.com/

```
1,1,,172455-50102-1,,"FRAME,LOWER(GREEN:82",1,,,,,,,,,,,,,,,,,,
1-1,1,,172455-50103-1,,"FRAME
ASSY,LOWER(82)",1,,,,,,S,,24780156,*2003.07,,,,,,,,,,I
2,1,,172141-50890,,GROMMET,2,,,,,,,,,,,,,,,,,,
2-1,1,,172458-
50480,,"COVER,FRAME(GREEN:88",2,,,,,,S,,24780156,*2003.07,,,,,,,,,,I
3,1,,172187-50801-1,,"PLATE L, GUARD  (82)",2,,,,,,,,,,,,,,,,,,
4,1,,172187-50811-1,,"PLATE R, GUARD  (82)",2,,,,,,,,,,,,,,,,,,
5,1,,22137-160000,,"WASHER 16,POLISHED",12,,,,,,,,,,,,,,,,,,
6,1,,22217-160000,,"SPRING WASHER 16",12,,,,,,,,,,,,,,,,,,
7,1,,26116-160402,,"BOLT M16X 40 PLATED",12,,,,,,,,,,,,,,,,,,
8,1,,172455-53301-1,,"WEIGHT,COUNTER  (82)",1,,,,,,,,,,,,,,,,,,
9,1,,172455-53310-1,,"WEIGHT SIDE L   (82)",1,,,,,,,,,,,,,,,,,,
10,1,,172187-53320,,"WASHER 24.5X65X8",3,,,,,,,,,,,,,,,,,,
11,1,,172455-53330,,"BOLT 24X140",3,,,,,,,,,,,,,,,,,,
12,1,,172165-53480,,"BOLT M16X 60",2,,,,,,,,,,,,,,,,,,
13,1,,172165-53500,,WASHER,2,,,,,,,,,,,,,,,,,,
14,1,,22217-160000,,"SPRING WASHER 16",2,,,,,,,,,,,,,,,,,,
15,1,,172478-54101-1,,"FRAME,TURNING   (86)",1,,,,,,,,,,,,,,,,,,
16,2,,172187-54750,,"BUSH 100X80",1,,,,,,,,,,,,,,,,,,
17,2,,172187-54760,,"BUSH 100X40",1,,,,,,,,,,,,,,,,,,
18,1,,172478-54450-1,,"PLATE     (GREEN:86)",1,,,,,,,,,,,,,,,,,,
19,1,,26013-100252,,"BOLT W/WASHER M10X25",2,,,,,,,,,,,,,,,,,,
20,1,,172187-57600,,"TURNING BEARING",1,,,,,,,,,,,,,,,,,,
22,2,,172187-57630,,"SEAL, UPPER",1,,,,,,,,,,,,,,,,,,
23,2,,172187-57640,,"SEAL, LOWER",1,,,,,,,,,,,,,,,,,,
24,1,,172455-57650,,"BOLT 16X90",30,,,,,,,,,,,,,,,,,,
25,1,,172162-57660,,"PIN 16X40,STRAIGHT",2,,,,,,,,,,,,,,,,,,
26,1,,172162-57660,,"PIN 16X40,STRAIGHT",2,,,,,,,,,,,,,,,,,,
27,1,,172455-57661,,"BOLT 16X80",28,,,,,,,,,,,,,,,,,,
28,1,,26106-100122,,"BOLT M10X 12
PLATED",4,,,,,,W,,24780156,*2003.07,,,,,,,,,,I
```

https://truckmanualshub.com/

P/C NEWS No:Y00S4030-2
PUBLISHED:2003/09

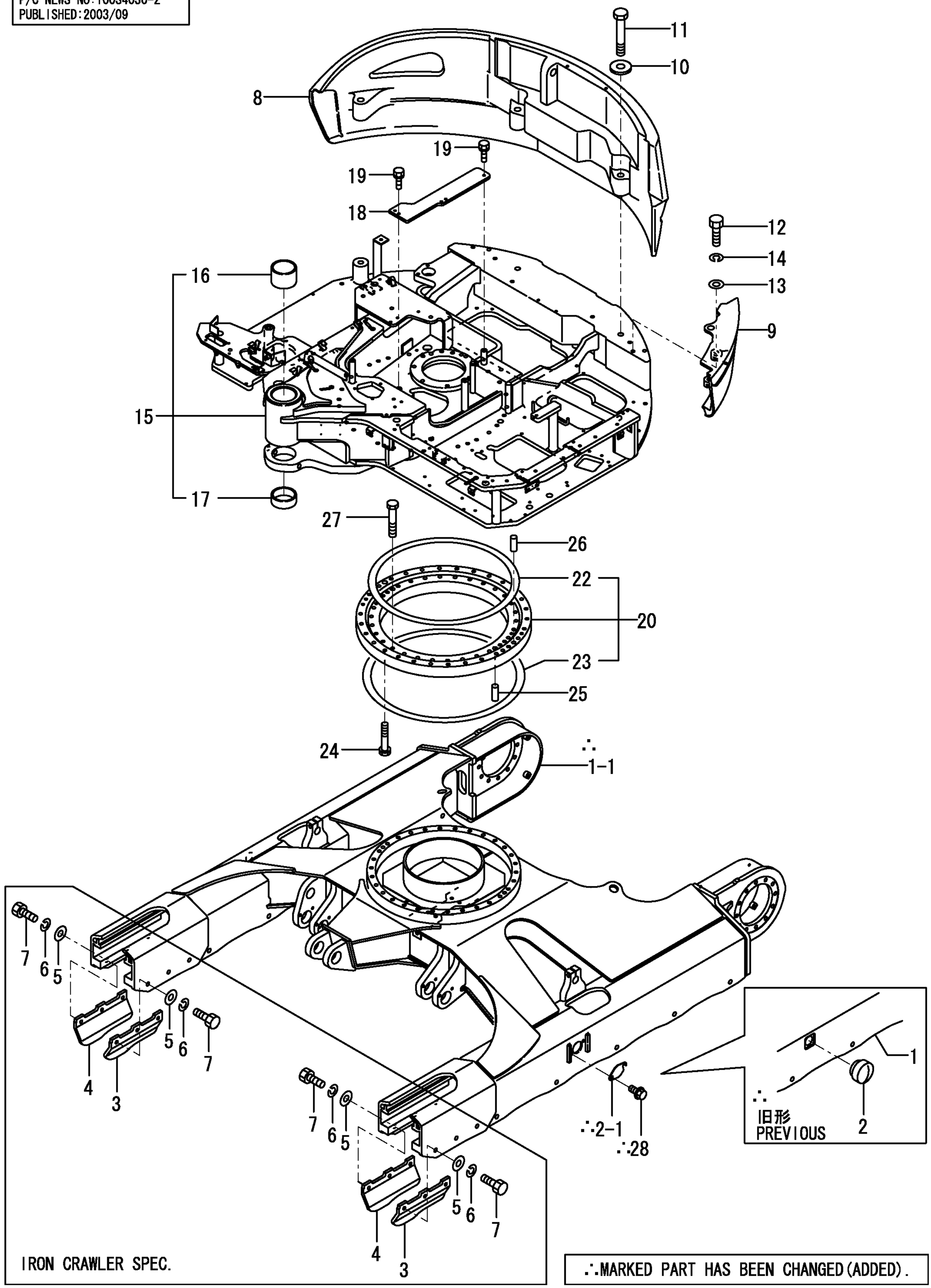

∴MARKED PART HAS BEEN CHANGED(ADDED).

https://truckmanualshub.com/

```
1,1,,172137-46040,,"SEAT, SPRING",3,,,,,,,,,,,,,,,,,
2,1,,172168-46760,,"BOLT M10X20",3,,,,,,,,,,,,,,,,,
3,1,,172455-61100-2,,"COVER, UNDER A  (86)",1,,,,,,,,,,,,,,,,,
4,1,,172478-61111-1,,"COVER B, UNDER  (86)",1,,,,,,,,,,,,,,,,,
5,1,,172455-61120-2,,"COVER, UNDER C  (86)",1,,,,,,,,,,,,,,,,,
6,1,,172455-61130-2,,"COVER, UNDER D  (86)",1,,,,,,,,,,,,,,,,,
7,1,,172478-61351-1,,"COVER , FRAME L (86)",1,,,,,,,,,,,,,,,,,
10,2,,172478-68910,,"SEAL 10X10X650",1,,,,,,,,,,,,,,,,,
11,1,,172455-61370-1,,"COVER, FRAME R  (86)",1,,,,,,,,,,,,,,,,,,
12,1,,172478-61390,,"RUBBER,COVER",2,,,,,,,,,,,,,,,,,
13,1,,172478-61401-1,,"COVER , FRAME F (86)",1,,,,,,,,,,,,,,,,,,
17,2,,172478-68920,,"SEAL 10X10X910",1,,,,,,,,,,,,,,,,,
18,1,,172478-61450-1,,"COVER,FRONT(GREEN:86",1,,,,,,,,,,,,,,,,,,
19,1,,172162-61500,,RUBBER,4,,,,,,,,,,,,,,,,,
20,1,,172187-61500-2,,"COVER,UNDER(GREEN:82",1,,,,,,,,,,,,,,,,,,
21,1,,172478-61560-1,,"PLATE     (GREEN:86)",1,,,,,,,,,,,,,,,,,,
22,1,,172463-61600,,"PLUG 28X3.2",6,,,,,,,,,,,,,,,,,
23,1,,172455-61650-1,,"COVER L, DRIVE  (82)",1,,,,,,,,,,,,,,,,,,
24,1,,172455-61660-1,,"COVER R, DRIVE  (82)",1,,,,,,,,,,,,,,,,,,
25,1,,22137-100000,,"WASHER 10,POLISHED",15,,,,,,,,,,,,,,,,,
26,1,,22137-100000,,"WASHER 10,POLISHED",8,,,,,,,,,,,,,,,,,
27,1,,22157-100000,,"WASHER 10",2,,,,,,,,,,,,,,,,,
28,1,,22157-120000,,"WASHER 12",4,,,,,,,,,,,,,,,,,
29,1,,26013-100202,,"BOLT W/WASHER M10X20",15,,,,,,,,,,,,,,,,,
30,1,,26013-100202,,"BOLT W/WASHER M10X20",2,,,,,,,,,,,,,,,,,
31,1,,26013-100202,,"BOLT W/WASHER M10X20",8,,,,,,,,,,,,,,,,,
32,1,,26013-120302,,"BOLT W/WASHER M12X30",4,,,,,,,,,,,,,,,,,
33,1,,26106-100162,,"BOLT M10X 16 PLATED",26,,,,,,,,,,,,,,,,,
```

https://truckmanualshub.com/

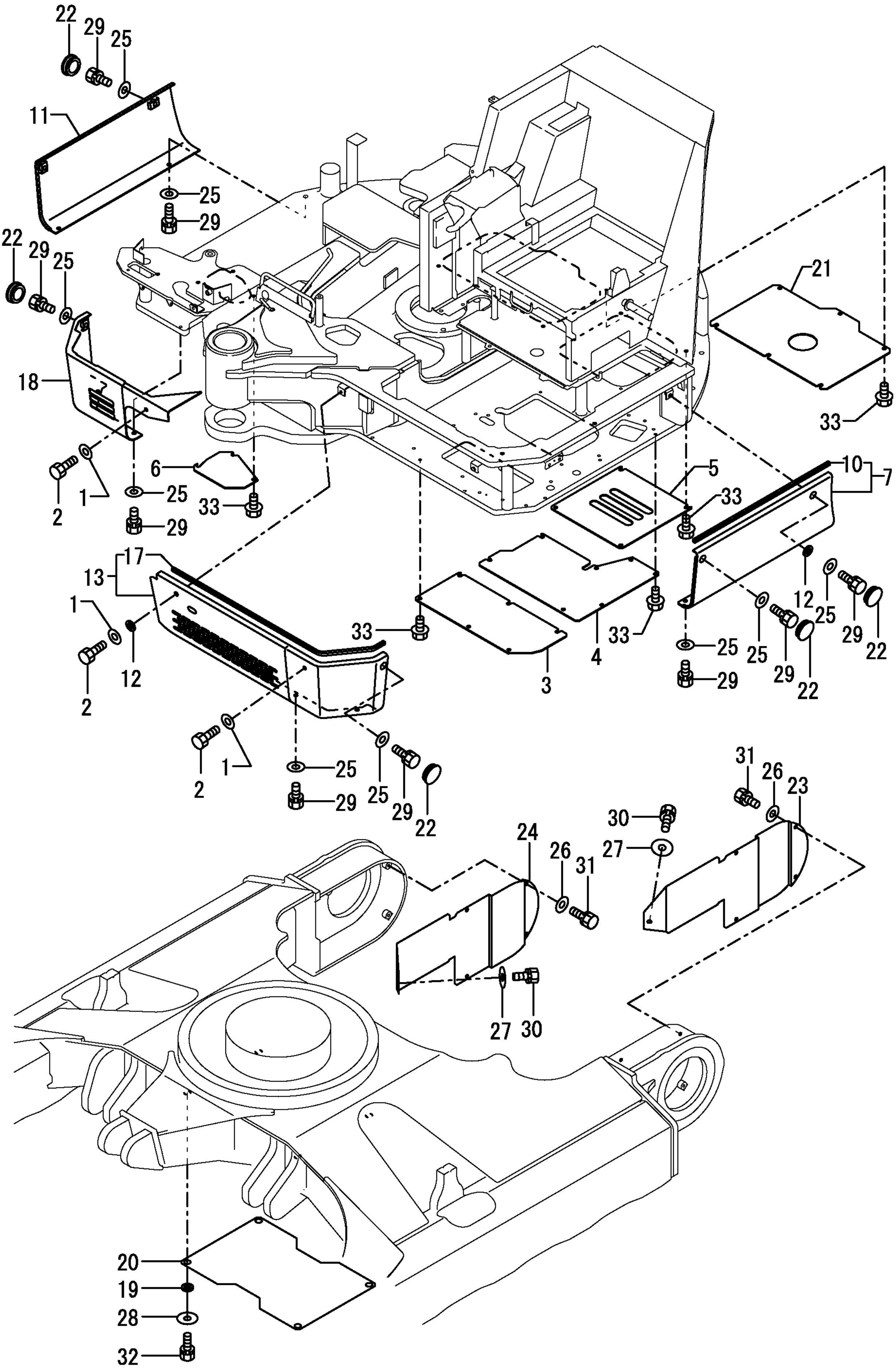

https://truckmanualshub.com/

```
1,1,,172478-61200,,"COVER,MULTI(BLACK:12",1,,,,,,,,,,,,,,,,,,
3,2,,172183-61350,,"RUBBER,EDGE",1,,,,,,,,,,,,,,,,,,
4,2,,172183-61360,,"RUBBER,EDGE",1,,,,,,,,,,,,,,,,,,
5,1,,172478-61270,,"RUBBER,SPONGE",1,,,,,,,,,,,,,,,,,,
6,1,,172478-61370,,"COVER,SEAT R",1,,,,,,,,,,,,,,,,,,
7,1,,172455-61520-1,,"COVER,BLADE(GREEN:82",1,,,,,,,,,,,,,,,,,,,,
8,1,,172519-63240,,"BOLT  8X 16",3,,,,,,,,,,,,,,,,,,
9,1,,22217-100000,,"SPRING WASHER 10",1,,,,,,,,,,,,,,,,,,
10,1,,26013-100202,,"BOLT W/WASHER M10X20",2,,,,,,,,,,,,,,,,,,
11,1,,26013-100202,,"BOLT W/WASHER M10X20",2,,,,,,,,,,,,,,,,,,
12,1,,26116-100602,,"BOLT M10X 60 PLATED",1,,,,,,,,,,,,,,,,,,
```

https://truckmanualshub.com/

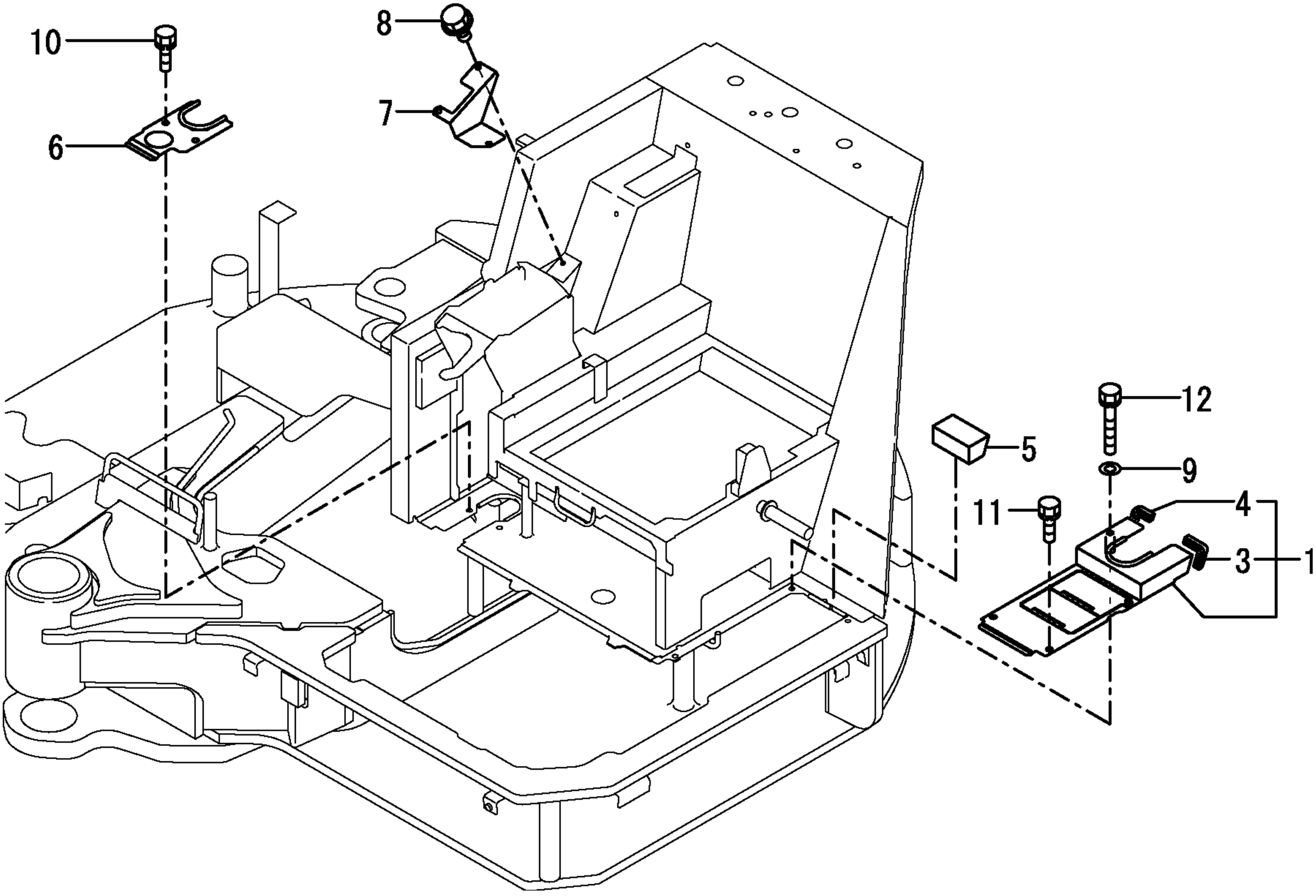

https://truckmanualshub.com/

```
1,1,,172122-17190,,CLIP,1,,,,,,,,,,,,,,,,,
2,1,,172164-45880,,"BOLT  6X 16",2,,,,,,,,,,,,,,,,,
3,1,,172187-61690,,VENTILATOR,1,,,,,,,,,,,,,,,,,
4,1,,172159-63240,,"BOLT 8X16",2,,,,,,,,,,,,,,,,,
5,1,,172455-63371,,"COVER,SEAT MT (72)",1,,,,,,,,,,,,,,,,,
12,2,,172455-63511,,"TRIM A",1,,,,,,,,,,,,,,,,,
13,2,,172455-63521,,"TRIM B",1,,,,,,,,,,,,,,,,,
14,1,,172455-63440,,"COVER ASSY,SIDE (72)",1,,,,,,,,,,,,,,,,,
17,1,,172478-64900,,"GRILLE ASSY(GRAY:73)",1,,,,,,,,,,,,,,,,,
19,2,,172478-64970,,"TRIM 595",1,,,,,,,,,,,,,,,,,
20,2,,172519-65300,,RUBBER,1,,,,,,,,,,,,,,,,,
21,1,,172165-66980,,"BOLT M 8X 25",3,,,,,,,,,,,,,,,,,
22,1,,22137-100000,,"WASHER 10,POLISHED",3,,,,,,,,,,,,,,,,,
23,1,,26013-100202,,"BOLT W/WASHER M10X20",2,,,,,,,,,,,,,,,,,
24,1,,26013-100702,,"BOLT 10X70 W/SP.WSHR",3,,,,,,,,,,,,,,,,,
```

https://truckmanualshub.com/

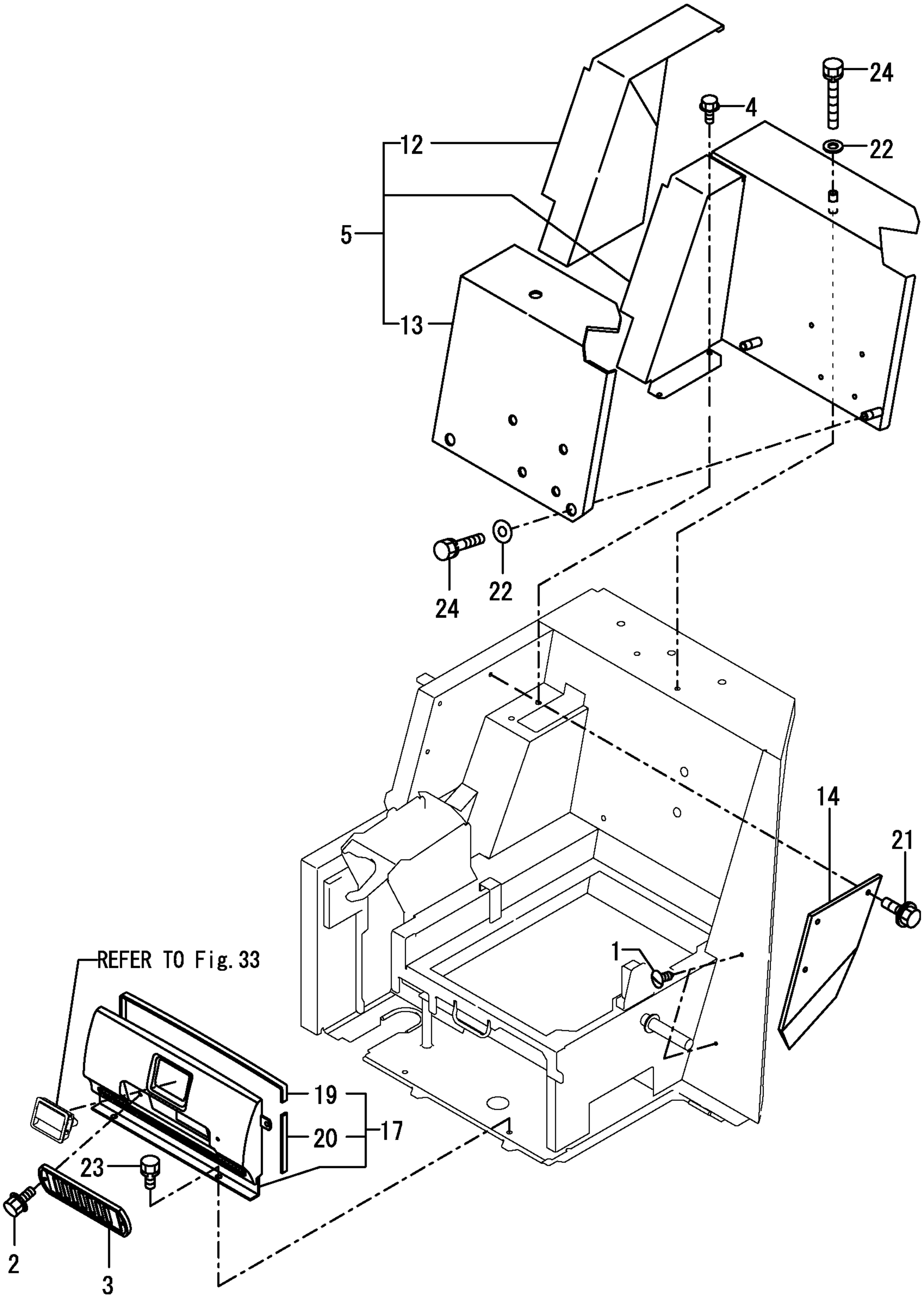

```
1,1,,172463-62101,,STEPEV(US,1,,,,,,,,,,,,,,,,,
5,1,,172478-62160,,"MAT B,CABIN",1,,,,,,,,,,,,,,,,,
6,1,,172455-62170,,"MAT A",1,,,,,,,,,,,,,,,,,
7,1,,26013-100202,,"BOLT W/WASHER M10X20",8,,,,,,,,,,,,,,,,,
8,1,,172458-46720,,"BOLT 8X20",3,,,,,,,,,,,,,,,,,
9,1,,172458-46720,,"BOLT 8X20",1,,,,,,,,,,,,,,,,,
10,1,,172458-46720,,"BOLT 8X20",1,,,,,,,,,,,,,,,,,
11,1,,172458-46720,,"BOLT 8X20",2,,,,,,,,,,,,,,,,,
12,1,,172162-62540,,"SEAL,STEP L",2,,,,,,,,,,,,,,,,,
13,1,,172458-63100,,"INSTRUMENT PANEL L",1,,,,,,,,,,,,,,,,,
14,1,,172458-63120,,"INSTRUMENT PANEL L",1,,,,,,,,,,,,,,,,,
15,1,,172478-63200,,"COVER R",1,,,,,,,,,,,,,,,,,
18,1,,172472-63210,,"COVER R,US",1,,,,,,,,,,,,,,,,,
19,1,,172472-63220,,"COVER L,US",1,,,,,,,,,,,,,,,,,
20,1,,172519-63240,,"BOLT  8X 16",2,,,,,,,,,,,,,,,,,
21,1,,172519-63240,,"BOLT  8X 16",3,,,,,,,,,,,,,,,,,
22,1,,172441-44320,,"ARM REST",2,,,,,,,,,,,,,,,,,
23,1,,172472-64531-1,,"PLATE R,ARM REST(72)",1,,,,,,,,,,,,,,,,,
24,1,,172472-64541-1,,"PLATE L,ARM REST(72)",1,,,,,,,,,,,,,,,,,
25,1,,172165-66980,,"BOLT M 8X 25",4,,,,,,,,,,,,,,,,,
26,1,,26577-080122,,"SCREW M 8X 12",4,,,,,,,,,,,,,,,,,
```

https://truckmanualshub.com/

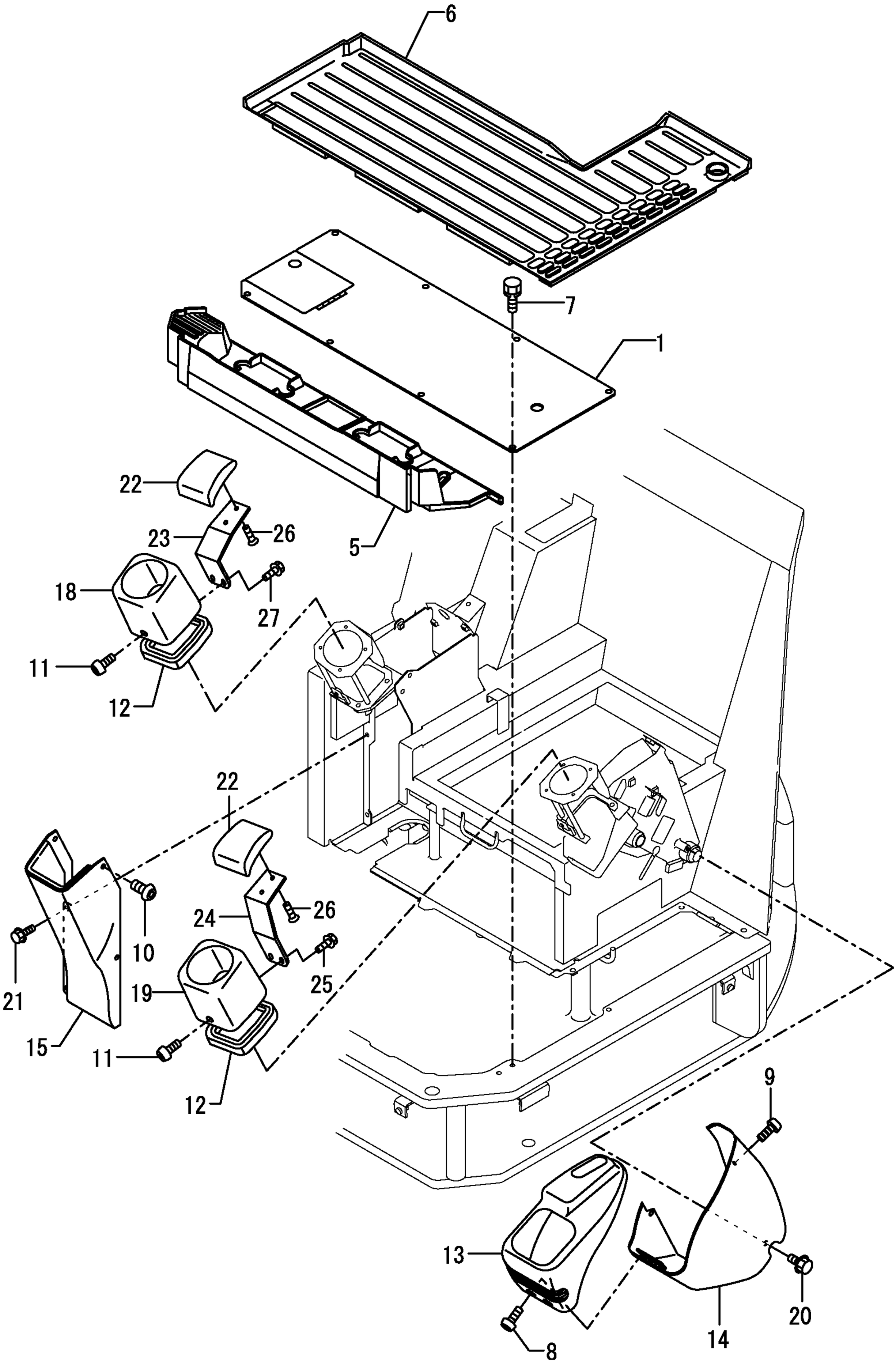

https://truckmanualshub.com/

```
1,1,,172168-46760,,"BOLT M10X20",5,,,,,,,,,,,,,,,,,
2,1,,172165-53490,,"BOLT M16X 40",5,,,,,,,,,,,,,,,,,
3,1,,172187-61421,,"HANDLE, LOCK",1,,,,,,,,,,,,,,,,,
4,1,,172519-63240,,"BOLT  8X 16",2,,,,,,,,,,,,,,,,,
5,1,,172519-63240,,"BOLT  8X 16",3,,,,,,,,,,,,,,,,,
6,1,,172478-64280,,"COVER F,SEAT MOUNT",1,,,,,,,,,,,,,,,,,
7,1,,172478-64340,,"COVER A,SEAT MOUNT",1,,,,,,,,,,,,,,,,,
9,2,,172455-64700,,"RUBBER 135",1,,,,,,,,,,,,,,,,,
10,1,,172478-64400,,"SEAT MOUNT,EP   (72)",1,,,,,,,,,,,,,,,,,
11,2,,172156-11150,,"SEAL, ENGINE",1,,,,,,,,,,,,,,,,,
12,2,,172141-41360,,"BUSH 1415",2,,,,,,,,,,,,,,,,,
13,2,,172455-61580,,"RUBBER 30",1,,,,,,,,,,,,,,,,,
22,2,,172455-66580,,MAT,1,,,,,,,,,,,,,,,,,
23,2,,172164-66640,,"RUBBER, SEAL 400",1,,,,,,,,,,,,,,,,,
26,1,,172478-64560,,"PLATE,SEAT",1,,,,,,,,,,,,,,,,,
27,1,,172478-64660,,"BRACKET,GAS SPRING",1,,,,,,,,,,,,,,,,,
28,1,,172455-64802,,"BRACKET ASSY(GRAY:73",1,,,,,,,,,,,,,,,,,
29,1,,172187-64900,,PLUG,1,,,,,,,,,,,,,,,,,
30,1,,172187-64900,,PLUG,1,,,,,,,,,,,,,,,,,
31,1,,172455-66380-1,,"COVER B ASSY    (87)",1,,,,,,,,,,,,,,,,,
32,2,,172162-61120,,"SEAL,COVER B",1,,,,,,,,,,,,,,,,,
34,2,,172455-66390,,"SEAL 570",1,,,,,,,,,,,,,,,,,
36,1,,172176-67150,,RUBBER,2,,,,,,,,,,,,,,,,,
37,1,,22137-100000,,"WASHER 10,POLISHED",3,,,,,,,,,,,,,,,,,
38,1,,22137-100000,,"WASHER 10,POLISHED",2,,,,,,,,,,,,,,,,,
39,1,,22217-160000,,"SPRING WASHER 16",5,,,,,,,,,,,,,,,,,
40,1,,26013-100202,,"BOLT W/WASHER M10X20",4,,,,,,,,,,,,,,,,,
41,1,,26013-100202,,"BOLT W/WASHER M10X20",4,,,,,,,,,,,,,,,,,
42,1,,26014-100202,,"BOLT M10X 20",2,,,,,,,,,,,,,,,,,
43,1,,26013-100252,,"BOLT W/WASHER M10X25",2,,,,,,,,,,,,,,,,,
```

https://truckmanualshub.com/

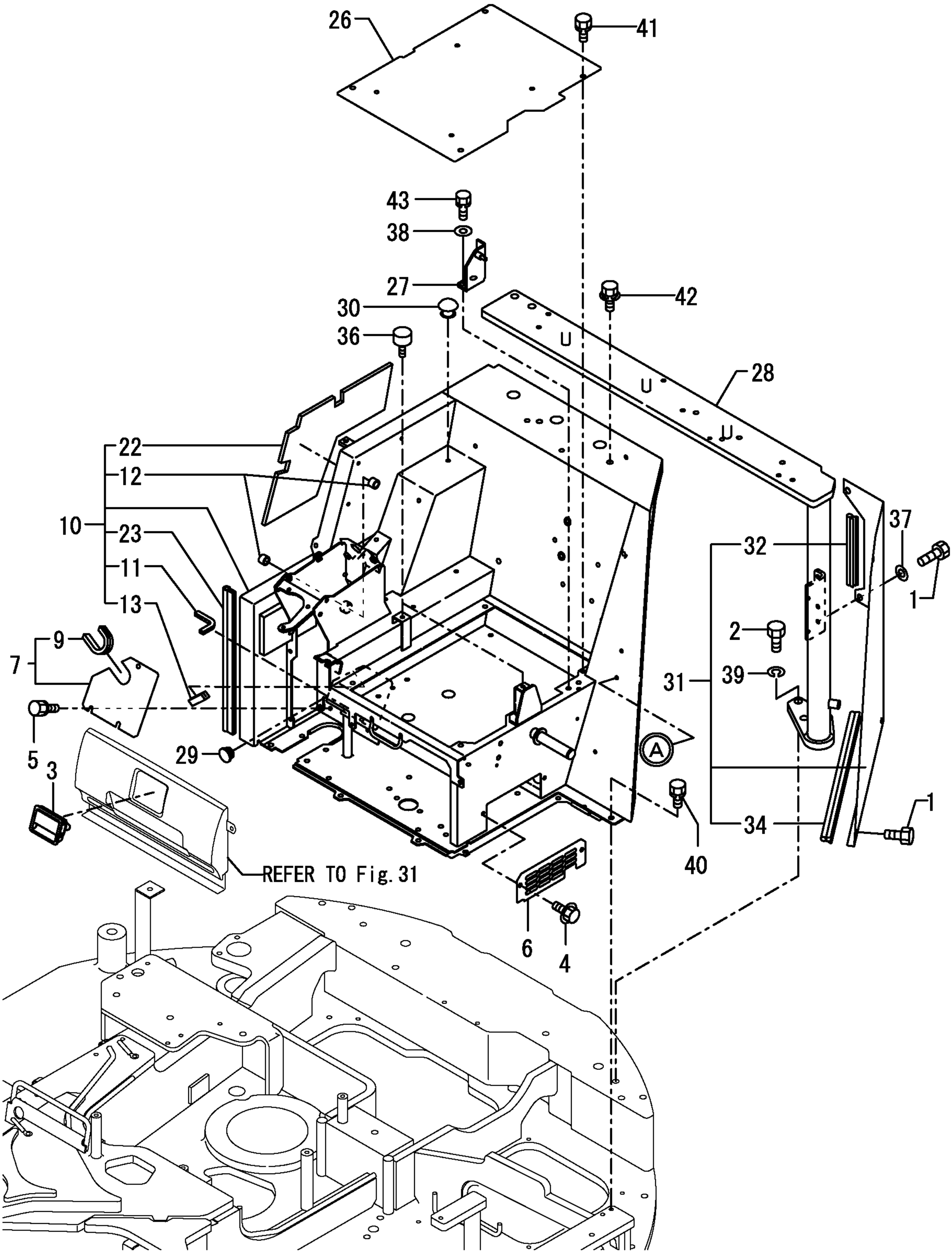

https://truckmanualshub.com/

```
1,1,,172444-54920,,"SEAL,WEIGHT C",1,,,,,,,,,,,,,,,,,
2,1,,172434-61180,,"TRIM 195",1,,,,,,,,,,,,,,,,,
3,1,,172478-65200,,"BONNET B",1,,,,,,,,,,,,,,,,,
6,1,,172455-65220,,"PLATE, RAIL",1,,,,,,,,,,,,,,,,,
7,1,,172455-65230,,"PLATE,KEY(YELLOW:87)",1,,,,,,,,,,,,,,,,,,
8,1,,172455-65240,,"PLATE, ROCK",1,,,,,,,,,,,,,,,,,
9,1,,172445-65250,,BRACKET,1,,,,,,,,,,,,,,,,,
10,1,,172455-65660,,"STAY, COVER",1,,,,,,,,,,,,,,,,,
11,1,,172455-65741-1,,"HINGE ASSY(GREEN:86)",1,,,,,,,,,,,,,,,,,,
12,1,,172164-66170,,"KEY ASSY, CYLINDER",1,,,,,,,,,,,,,,,,,
17,1,,172455-66200,,"ROD, STOPPER",1,,,,,,,,,,,,,,,,,
18,1,,172455-66400,,"BRACKET, ROCK",1,,,,,,,,,,,,,,,,,
19,1,,172455-66430,,"BRACKET, GUIDE",1,,,,,,,,,,,,,,,,,
20,1,,172455-66450,,PLATE,1,,,,,,,,,,,,,,,,,
21,1,,172187-68050,,"SEAL,COVER FRONT",1,,,,,,,,,,,,,,,,,
22,1,,22137-080000,,"WASHER 8, POLISHED",2,,,,,,,,,,,,,,,,,
23,1,,22137-080000,,"WASHER 8, POLISHED",2,,,,,,,,,,,,,,,,,
24,1,,22137-100000,,"WASHER 10,POLISHED",2,,,,,,,,,,,,,,,,,
25,1,,22137-100000,,"WASHER 10,POLISHED",2,,,,,,,,,,,,,,,,,
26,1,,22137-120000,,"WASHER 12,POLISHED",4,,,,,,,,,,,,,,,,,
27,1,,22157-080000,,"WASHER  8",4,,,,,,,,,,,,,,,,,
28,1,,22372-080000,,"SNAP PIN (JASO 8)",1,,,,,,,,,,,,,,,,,
29,1,,22417-200200,,"COTTER PIN 2.0X20",1,,,,,,,,,,,,,,,,,
30,1,,26013-080122,,"BOLT M 8X 12",2,,,,,,,,,,,,,,,,,
31,1,,26013-080162,,"BOLT W/WASHER M8X16",2,,,,,,,,,,,,,,,,,
32,1,,26013-080162,,"BOLT W/WASHER M8X16",4,,,,,,,,,,,,,,,,,
33,1,,26013-100202,,"BOLT W/WASHER M10X20",2,,,,,,,,,,,,,,,,,
34,1,,26013-100202,,"BOLT W/WASHER M10X20",2,,,,,,,,,,,,,,,,,
35,1,,26013-100252,,"BOLT W/WASHER M10X25",2,,,,,,,,,,,,,,,,,
36,1,,26013-100252,,"BOLT W/WASHER M10X25",2,,,,,,,,,,,,,,,,,
37,1,,26013-120202,,"BOLT W/WASHER M12X20",4,,,,,,,,,,,,,,,,,
38,1,,26014-080162,,"BOLT M 8X 16",3,,,,,,,,,,,,,,,,,
39,1,,26347-100002,,"U-NUT 10",1,,,,,,,,,,,,,,,,,
```

https://truckmanualshub.com/

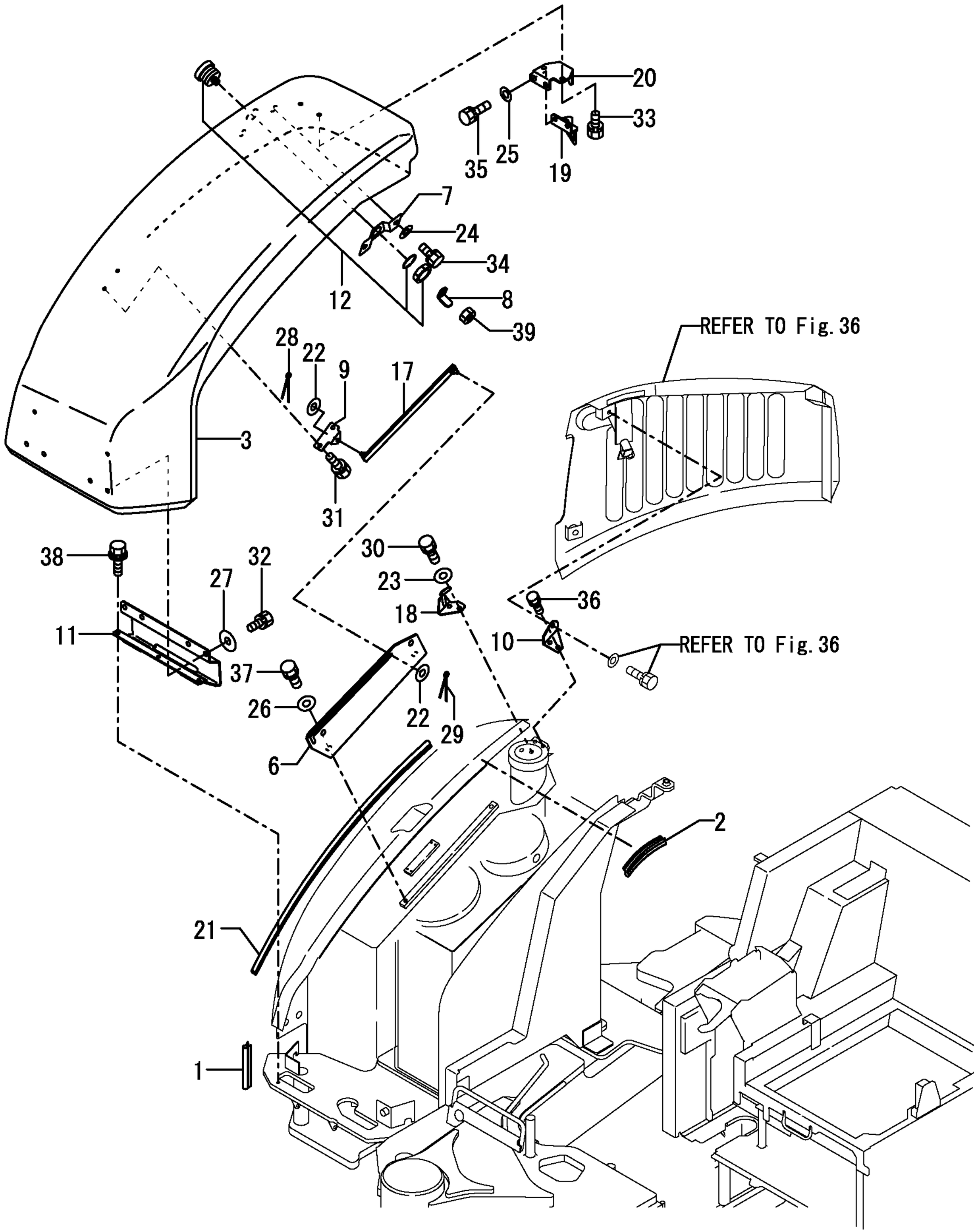

https://truckmanualshub.com/

```
1,1,,172162-61500,,RUBBER,1,,,,,,,,,,,,,,,,,,
2,1,,172187-64900,,PLUG,2,,,,,,,,,,,,,,,,,,
3,1,,172455-65201-1,,"BONNET ASSY,UP  (87)",1,,,,,,,,,,,,,,,,,,
4,2,,172434-61350,,"RUBBER, SEAL 140",1,,,,,,,,,,,,,,,,,,
5,2,,172478-65220,,"RUBBER,20",1,,,,,,,,,,,,,,,,,,
7,2,,172478-65800,,"SEAL,SPONGE 400",1,,,,,,,,,,,,,,,,,,
10,2,,172455-66711,,SPONGE,1,,,,,,,,,,,,,,,,,,
11,1,,172455-65700,,"COVER, EX.",1,,,,,,,,,,,,,,,,,,
12,1,,172455-66470,,"PLATE, STOPPER",1,,,,,,,,,,,,,,,,,,
13,1,,22137-080000,,"WASHER 8, POLISHED",4,,,,,,,,,,,,,,,,,,
14,1,,22137-100000,,"WASHER 10,POLISHED",2,,,,,,,,,,,,,,,,,,
15,1,,22137-100000,,"WASHER 10,POLISHED",3,,,,,,,,,,,,,,,,,,
16,1,,22157-120000,,"WASHER 12",1,,,,,,,,,,,,,,,,,,
17,1,,22217-100000,,"SPRING WASHER 10",3,,,,,,,,,,,,,,,,,,
18,1,,26013-080162,,"BOLT W/WASHER M8X16",4,,,,,,,,,,,,,,,,,,
19,1,,26013-100202,,"BOLT W/WASHER M10X20",2,,,,,,,,,,,,,,,,,,
20,1,,26013-120202,,"BOLT W/WASHER M12X20",1,,,,,,,,,,,,,,,,,,
21,1,,26116-100502,,"BOLT M10X 50 PLATED",3,,,,,,,,,,,,,,,,,,
```

https://truckmanualshub.com/

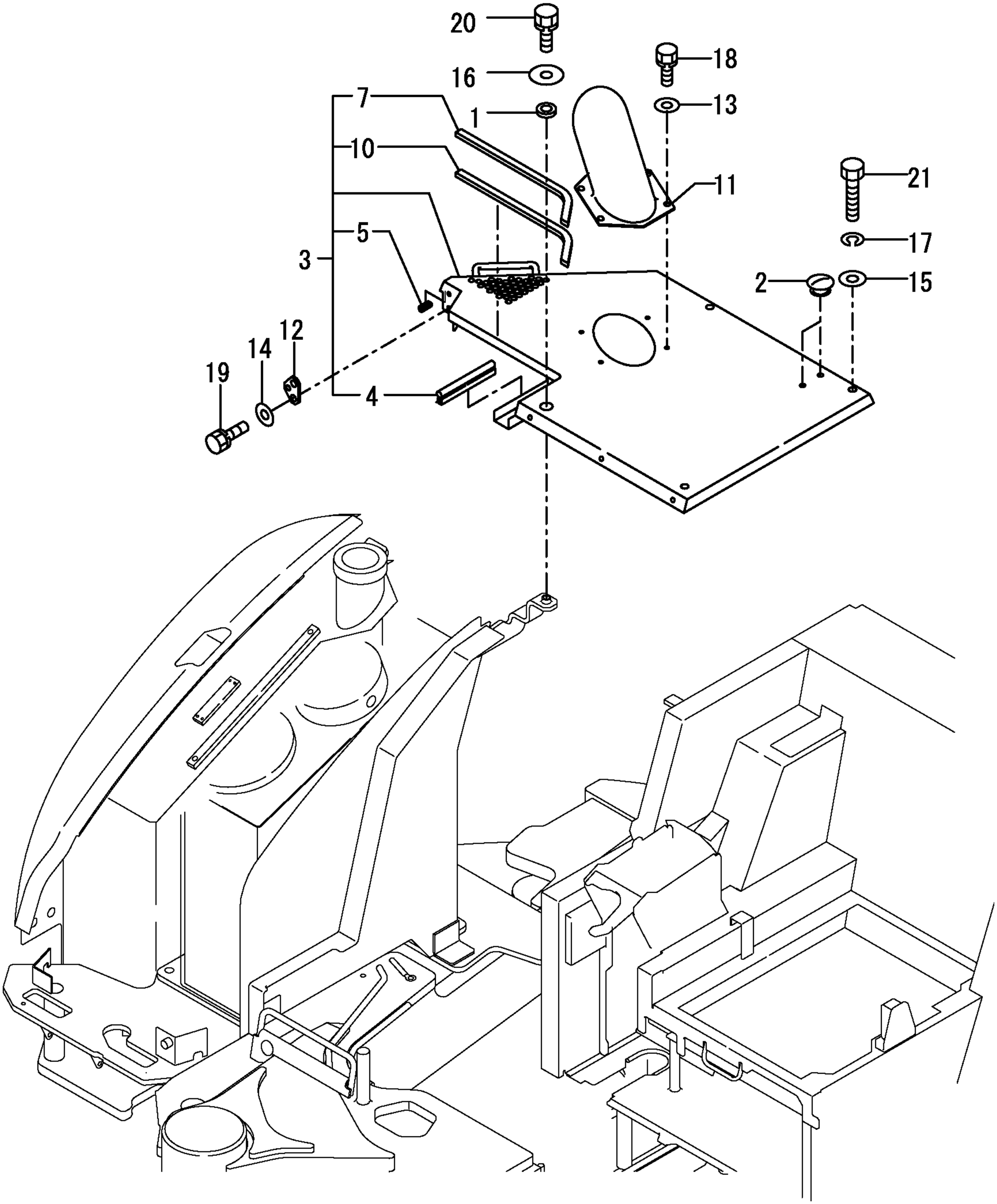

https://truckmanualshub.com/

```
1,1,,194145-04810,,"WASHER 10",3,,,,,,,,,,,,,,,,,
2,1,,194145-04810,,"WASHER 10",3,,,,,,,,,,,,,,,,,
3,1,,172434-61350,,"RUBBER, SEAL 140",1,,,,,,,,,,,,,,,,,,
4,1,,1A1380-62160,,WASHER,2,,,,,,,,,,,,,,,,,
5,1,,172444-64730,,"ROD,STOPPER",1,,,,,,,,,,,,,,,,,
6,1,,172458-65050,,SHAFT,1,,,,,,,,,,,,,,,,,
7,1,,172455-65060,,HOOK,1,,,,,,,,,,,,,,,,,
8,1,,172458-65060,,"COVER,BONNET LOCK",1,,,,,,,,,,,,,,,,,
9,1,,172455-65100-1,,"BONNET A ASSY   (87)",1,,,,,,,,,,,,,,,,,,
11,2,,172455-65950,,"SEAL, RUBBER 1440",1,,,,,,,,,,,,,,,,,
12,2,,172455-65960,,"SEAL, RUBBER 1190",1,,,,,,,,,,,,,,,,,
13,2,,172455-65970,,"SEAL, RUBBER 310",1,,,,,,,,,,,,,,,,,
16,1,,172187-65210,,"LEVER ASSY, LOCK",1,,,,,,,,,,,,,,,,,
17,1,,172187-65270,,"PLATE, CATCH",1,,,,,,,,,,,,,,,,,
18,1,,172444-65270,,"ROCK PLATE",1,,,,,,,,,,,,,,,,,
19,1,,172734-65270,,"SPRING, CATCH",1,,,,,,,,,,,,,,,,,
20,1,,172478-65340-1,,"BONNET R ASSY   (87)",1,,,,,,,,,,,,,,,,,,
24,1,,172455-65410,,BRACKET,1,,,,,,,,,,,,,,,,,
25,1,,172463-65410,,"PLUG 28X2.3",1,,,,,,,,,,,,,,,,,
26,1,,172124-65480,,CATCHER,1,,,,,,,,,,,,,,,,,
27,1,,172455-65500,,"BRACKET, ROCK",1,,,,,,,,,,,,,,,,,
28,1,,172455-65560,,"STAY R, SIDE",1,,,,,,,,,,,,,,,,,
29,1,,172156-65690,,"TORSION SPRING,STOPR",1,,,,,,,,,,,,,,,,,,
30,1,,172455-65800,,"PLATE, LOCK",1,,,,,,,,,,,,,,,,,
31,1,,172164-66170,,"KEY ASSY, CYLINDER",1,,,,,,,,,,,,,,,,,
36,1,,22137-080000,,"WASHER 8, POLISHED",1,,,,,,,,,,,,,,,,,
37,1,,22137-100000,,"WASHER 10,POLISHED",4,,,,,,,,,,,,,,,,,
38,1,,22137-100000,,"WASHER 10,POLISHED",2,,,,,,,,,,,,,,,,,
39,1,,22137-100000,,"WASHER 10,POLISHED",2,,,,,,,,,,,,,,,,,
40,1,,26347-100002,,"U-NUT 10",1,,,,,,,,,,,,,,,,,
41,1,,22137-100000,,"WASHER 10,POLISHED",1,,,,,,,,,,,,,,,,,
42,1,,22417-200200,,"COTTER PIN 2.0X20",2,,,,,,,,,,,,,,,,,
43,1,,22417-200200,,"COTTER PIN 2.0X20",2,,,,,,,,,,,,,,,,,
44,1,,26013-100252,,"BOLT W/WASHER M10X25",4,,,,,,,,,,,,,,,,,
45,1,,26013-100252,,"BOLT W/WASHER M10X25",3,,,,,,,,,,,,,,,,,
46,1,,26013-100252,,"BOLT W/WASHER M10X25",2,,,,,,,,,,,,,,,,,
47,1,,26013-100252,,"BOLT W/WASHER M10X25",2,,,,,,,,,,,,,,,,,
48,1,,26013-100252,,"BOLT W/WASHER M10X25",3,,,,,,,,,,,,,,,,,
49,1,,26013-100252,,"BOLT W/WASHER M10X25",1,,,,,,,,,,,,,,,,,
50,1,,26347-080002,,"U-NUT  8",1,,,,,,,,,,,,,,,,,
```

https://truckmanualshub.com/

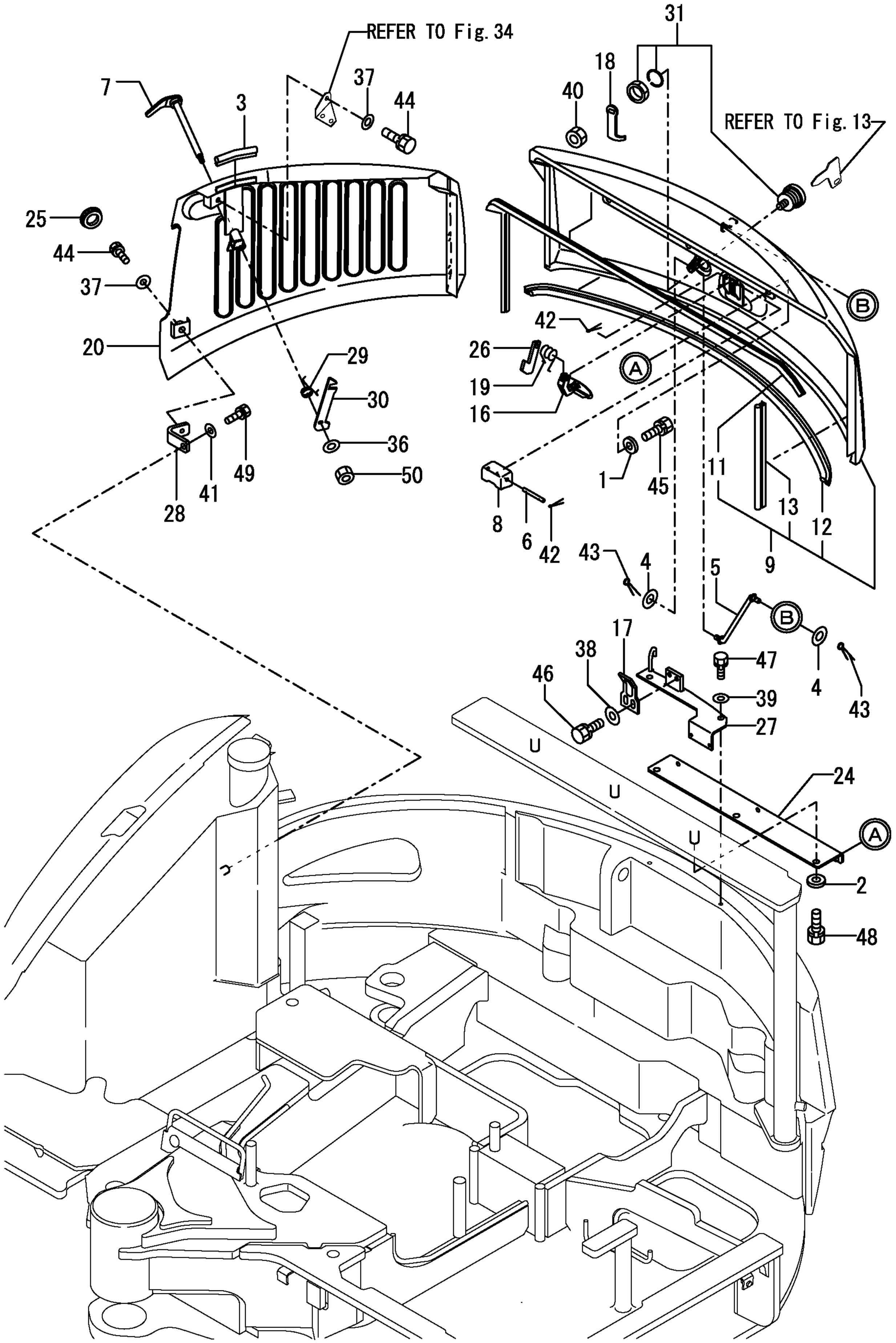

https://truckmanualshub.com/

```
1,1,,172478-65400-1,,"COVER,SIDE(YELLOW:87",1,,,,,,,,,,,,,,,,,
4,2,,172478-65490,,"RUBBER,SEAL 1110",1,,,,,,,,,,,,,,,,,
5,1,,172478-65500-1,,"COVER,CENTER    (87)",1,,,,,,,,,,,,,,,,,,
6,2,,172434-61350,,"RUBBER, SEAL 140",1,,,,,,,,,,,,,,,,,
7,2,,172162-61880,,"SEAL,PLATE B",1,,,,,,,,,,,,,,,,,
12,2,,172478-65590,,"RUBBER,SEAL 750",1,,,,,,,,,,,,,,,,,,
13,2,,172422-66150,,SEAL,1,,,,,,,,,,,,,,,,,
14,1,,172478-65601-1,,"COVER,STEP(YELLOW:87",1,,,,,,,,,,,,,,,,,,
17,1,,172478-65650,,"BRACKET,FRONT",1,,,,,,,,,,,,,,,,,
18,1,,172478-65700,,"DUCT,FRONT(BLACK:12)",1,,,,,,,,,,,,,,,,,,
22,1,,26013-080162,,"BOLT W/WASHER M8X16",3,,,,,,,,,,,,,,,,,
23,1,,26013-100202,,"BOLT W/WASHER M10X20",2,,,,,,,,,,,,,,,,,,
24,1,,26014-100202,,"BOLT M10X 20",4,,,,,,,,,,,,,,,,,
25,1,,26014-100202,,"BOLT M10X 20",3,,,,,,,,,,,,,,,,,
26,1,,26014-100202,,"BOLT M10X 20",4,,,,,,,,,,,,,,,,,
```

https://truckmanualshub.com/

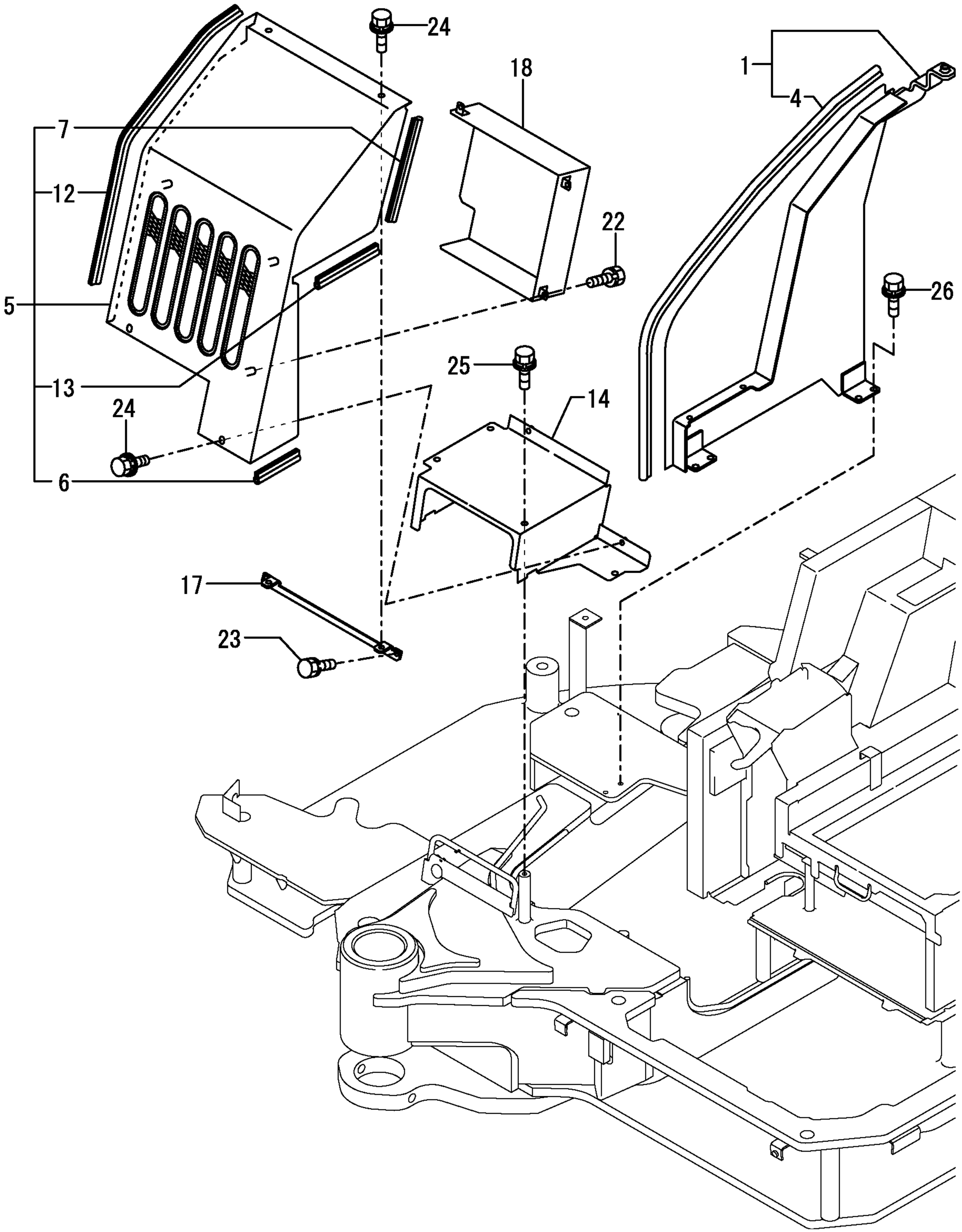

https://truckmanualshub.com/

```
1,1,,172126-11510,,"BAND 300",2,,,,,,,,,,,,,,,,,
2,1,,172519-63240,,"BOLT  8X 16",2,,,,,,,,,,,,,,,,,,
3,1,,172165-63650,,"PLUG 10,HOLE",2,,,,,,,,,,,,,,,,,,
4,1,,172478-68800-1,,"CABIN ASSY(GREEN:83)",1,,,,,,,1,,,,,,,,,,
5,2,,172478-68710-1,,"CABIN CMP (GREEN:83)",1,,,,,,,,,,,,,,,,,
6,1,,172455-68820,,"SPONGE SEAL",1,,,,,,,,,,,,,,,,,
7,1,,172455-68840,,"RUBBER, SASH",2,,,,,,,,,,,,,,,,,
8,1,,172478-68850,,"ABSOBER PAD A",1,,,,,,,,,,,,,,,,,
9,1,,172478-68860,,"ABSOBER PAD B",1,,,,,,,,,,,,,,,,,
10,1,,172478-68870,,"GROMMET 18X24X40",9,,,,,,,,,,,,,,,,,
10-1,1,,172478-68500,,"GROMMET 22X28X40",9,,,,,,S,,24780165,*2003.07,,,,,,,,,,I
11,1,,172478-68880,,"COLLAR 12X18X21",9,,,,,,,,,,,,,,,,,
12,1,,172478-68890,,"WASHER 12X40X4.5",9,,,,,,,,,,,,,,,,,
13,1,,172478-68900,,ASHTRAY,1,,,,,,,,,,,,,,,,,
14,1,,172478-68930,,"SEAL 10X12X250",1,,,,,,,,,,,,,,,,,
15,1,,172478-68940,,"SEAL 12X10X1200",1,,,,,,,,,,,,,,,,,
16,1,,172478-68950-1,,"COVER,CABIN(GREEN:83",1,,,,,,,,,,,,,,,,,,
18,2,,172478-68970,,"SEAL 10X12X166",1,,,,,,,,,,,,,,,,,
19,1,,172478-68980,,"ABSOBER PAD C",1,,,,,,,,,,,,,,,,,
20,1,,22217-120000,,"SPRING WASHER",9,,,,,,,,,,,,,,,,,
21,1,,22867-400100,,"SCREW 4X10",2,,,,,,,,,,,,,,,,,
22,1,,26076-120452,,"BOLT M12X 45 PLATED",9,,,,,,,,,,,,,,,,,
```

https://truckmanualshub.com/

P/C NEWS No:Y00S4030-2
PUBLISHED:2003/09

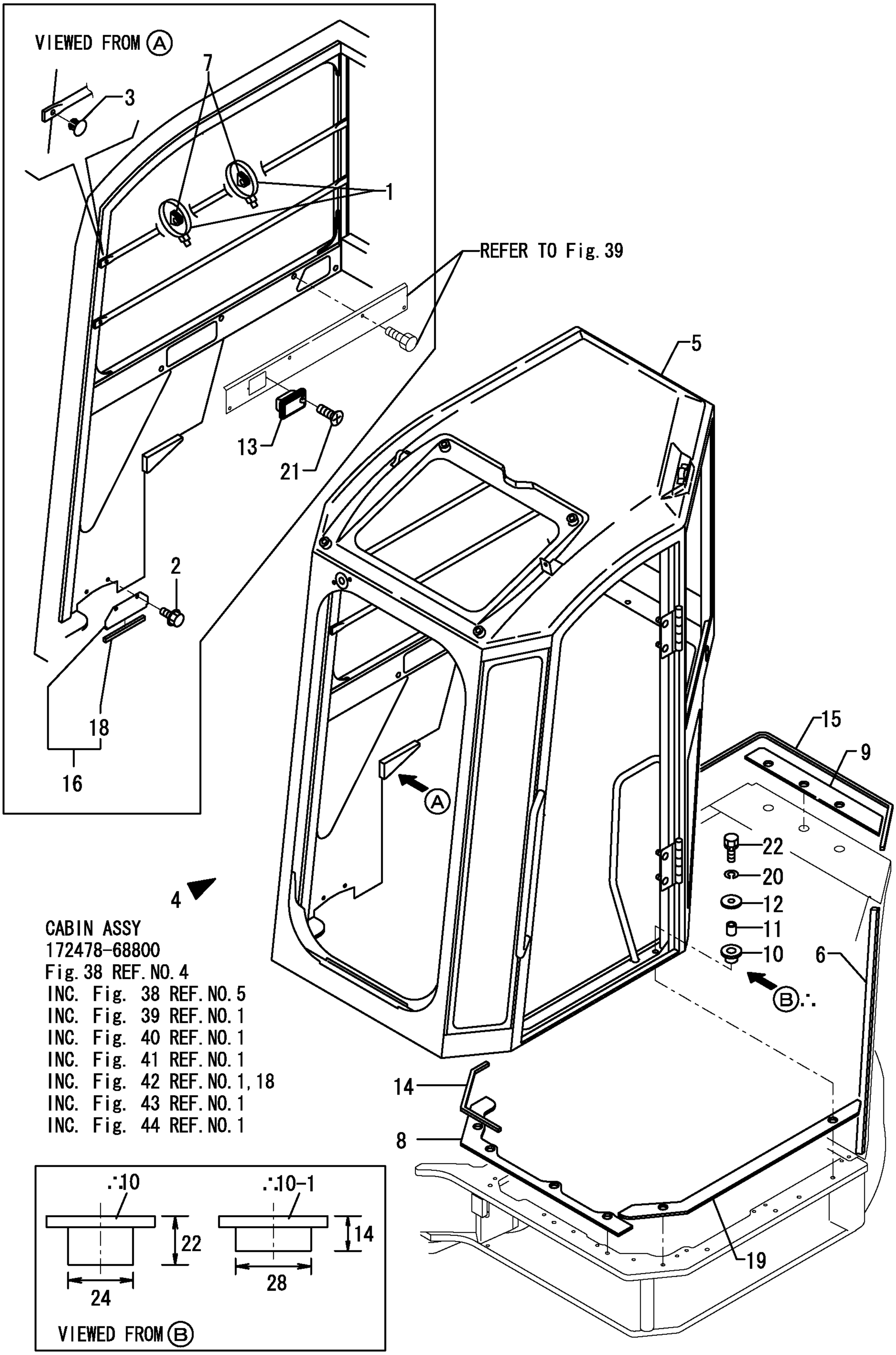

CABIN ASSY
172478-68800
Fig. 38 REF. NO. 4
INC. Fig. 38 REF. NO. 5
INC. Fig. 39 REF. NO. 1
INC. Fig. 40 REF. NO. 1
INC. Fig. 41 REF. NO. 1
INC. Fig. 42 REF. NO. 1, 18
INC. Fig. 43 REF. NO. 1
INC. Fig. 44 REF. NO. 1

∴MARKED PART HAS BEEN CHANGED (ADDED).

https://truckmanualshub.com/

```
1,2,,172478-68820,,"EXTERIOR GP(GREEN:83",1,,,,,,,,,,,,,,,,,
2,3,,172445-66541,,HAMMER,1,,,,,,,,,,,,,,,,,
3,3,,172455-67110,,SEAL,1,,,,,,,,,,,,,,,,,
4,3,,172455-67120,,"DOOR CATCH ASSY",1,,,,,,,,,,,,,,,,,
5,3,,172455-67130,,"SET BOLT",4,,,,,,,,,,,,,,,,,
6,3,,172455-67140,,"STOPPER RUBBER",1,,,,,,,,,,,,,,,,,
7,3,,172455-67160,,NUT,1,,,,,,,,,,,,,,,,,
8,3,,172455-67210,,"WIRE ASSY RELEASE",1,,,,,,,,,,,,,,,,,
9,3,,172455-67220,,"GROMMET W/W",1,,,,,,,,,,,,,,,,,
10,3,,172455-67230,,"LEVER CATCH DOOR",1,,,,,,,,,,,,,,,,,
11,3,,172455-67240,,SPRING,1,,,,,,,,,,,,,,,,,
12,3,,172455-67250,,WASHER,2,,,,,,,,,,,,,,,,,
13,3,,172455-67260,,WASHER,1,,,,,,,,,,,,,,,,,
14,3,,172455-67300,,"GLASS RUN",1,,,,,,,,,,,,,,,,,
15,3,,172455-67310,,"GLASS RUN",2,,,,,,,,,,,,,,,,,
16,3,,172455-67320,,CAP;CHANNEL,2,,,,,,,,,,,,,,,,,
17,3,,172455-67330,,"PLATE ASSY LOW GLASS",2,,,,,,,,,,,,,,,,,
18,3,,172455-67340,,"HOLDER GLASS UP",2,,,,,,,,,,,,,,,,,
19,3,,172455-67350,,SCREW(TORX),4,,,,,,,,,,,,,,,,,
20,3,,172455-67360,,SCREW(TORX),2,,,,,,,,,,,,,,,,,
21,3,,172455-67370,,"STRIP WEATHER",1,,,,,,,,,,,,,,,,,
22,3,,172455-67390,,BOLT,4,,,,,,,,,,,,,,,,,
23,3,,172455-67400,,STRIKER,1,,,,,,,,,,,,,,,,,
24,3,,172455-67430,,"SET SCREW",6,,,,,,,,72978008,,,,,,,,,,,I
25,3,,172455-67440,,"XMAS TREE CLIP",4,,,,,,,,,,,,,,,,,
26,3,,172455-67460,,"RUBBER PLATE",1,,,,,,,,,,,,,,,,,
27,3,,172478-68170,,"COVER,DOOR CATCH(83)",1,,,,,,,,,,,,,,,,,
28,3,,172478-68190,,"COVER,LEVER(GREEN:83",1,,,,,,,,,,,,,,,,,
29,3,,172478-68210,,"COVER,DUCT",1,,,,,,,,72978008,,,,,,,,,,,I
30,3,,172478-68380,,"TOPS GUARD 1(GREEN83",1,,,,,,,,,,,,,,,,,
31,3,,172463-68820,,PIPE,1,,,,,,,,,,,,,,,,,
32,3,,172463-68830,,"WASHER 8.5X18",2,,,,,,,,,,,,,,,,,
33,3,,172455-69440,,BOLT,3,,,,,,,,,,,,,,,,,
34,3,,172455-69440,,BOLT,3,,,,,,,,,,,,,,,,,
35,3,,172455-69520,,SCREW,2,,,,,,,,,,,,,,,,,
36,3,,22137-100000,,"WASHER 10,POLISHED",1,,,,,,,,,,,,,,,,,
37,3,,22137-100000,,"WASHER 10,POLISHED",4,,,,,,,,,,,,,,,,,
38,3,,22857-200061,,"SCREW 2.0*  6",1,,,,,,,,,,,,,,,,,
39,3,,22857-300061,,"SCREW M3X6,TAPPING",2,,,,,,,,,,,,,,,,,
40,3,,26366-080002,,"NUT M 8",1,,,,,,,,,,,,,,,,,
```

https://truckmanualshub.com/

1 INC. 2~40

CABIN ASSY
172478-68800
Fig.38 REF.NO.4
INC. Fig. 38 REF.NO.5
INC. Fig. 39 REF.NO.1
INC. Fig. 40 REF.NO.1
INC. Fig. 41 REF.NO.1
INC. Fig. 42 REF.NO.1,18
INC. Fig. 43 REF.NO.1
INC. Fig. 44 REF.NO.1

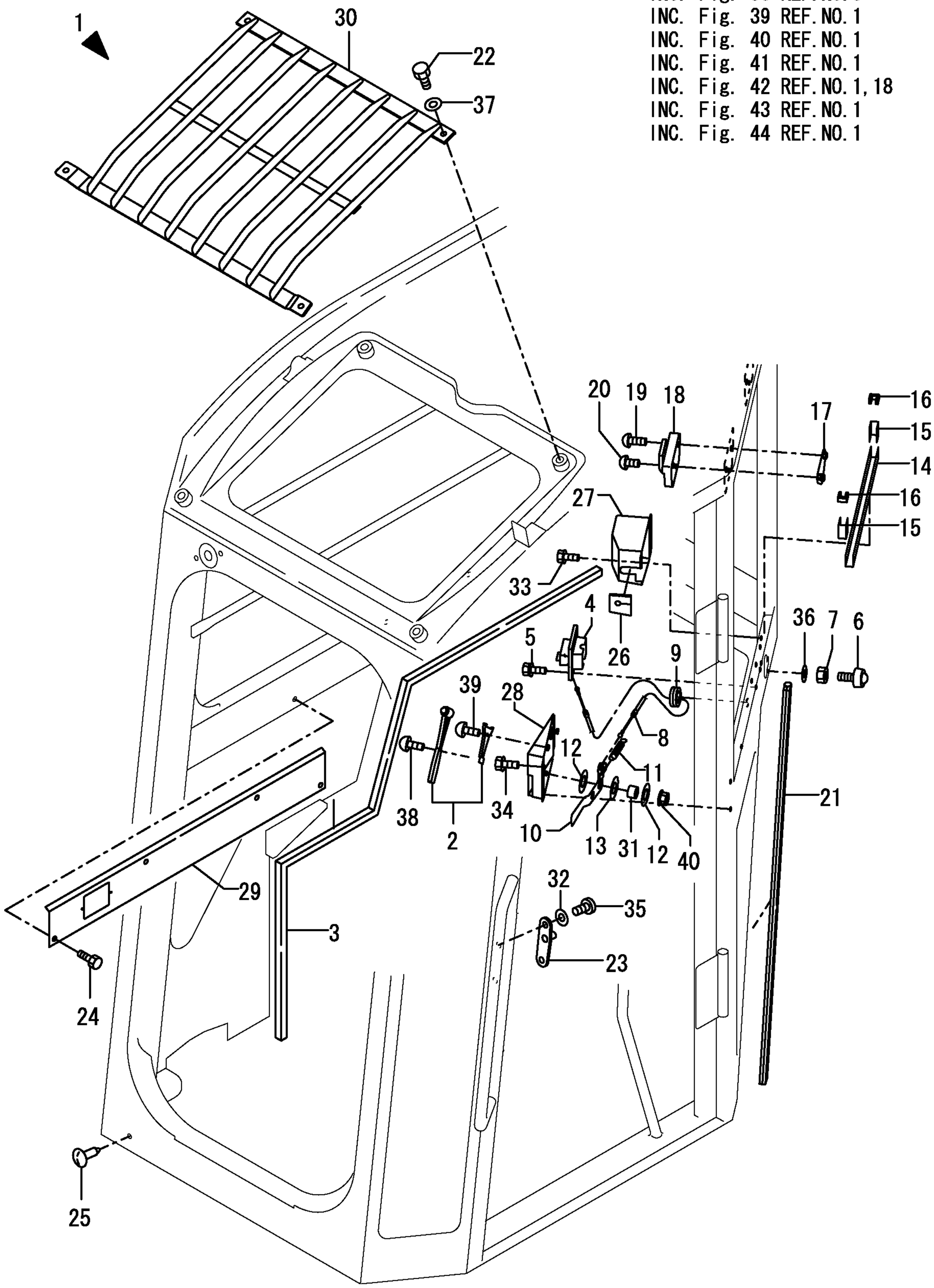

https://truckmanualshub.com/

```
1,2,,172463-68730,,"PAD GP",1,,,,,,,,,,,,,,,,,
2,3,,172455-67550,,FASTERNER,17,,,,,,,,,,,,,,,,,
3,3,,172463-68910,,"PAD ROOF,CTR",1,,,,,,,,,,,,,,,,,,
4,3,,172463-68920,,"PAD ROOF,RH",1,,,,,,,,,,,,,,,,,,
5,3,,172463-68930,,"PAD ROOF,LH",1,,,,,,,,,,,,,,,,,,
6,3,,172463-68940,,"PAD ROOF,RH-CTR",1,,,,,,,,,,,,,,,,,,,
7,3,,172463-68950,,"PAD ROOF,LH-CTR",1,,,,,,,,,,,,,,,,,,,
```

https://truckmanualshub.com/

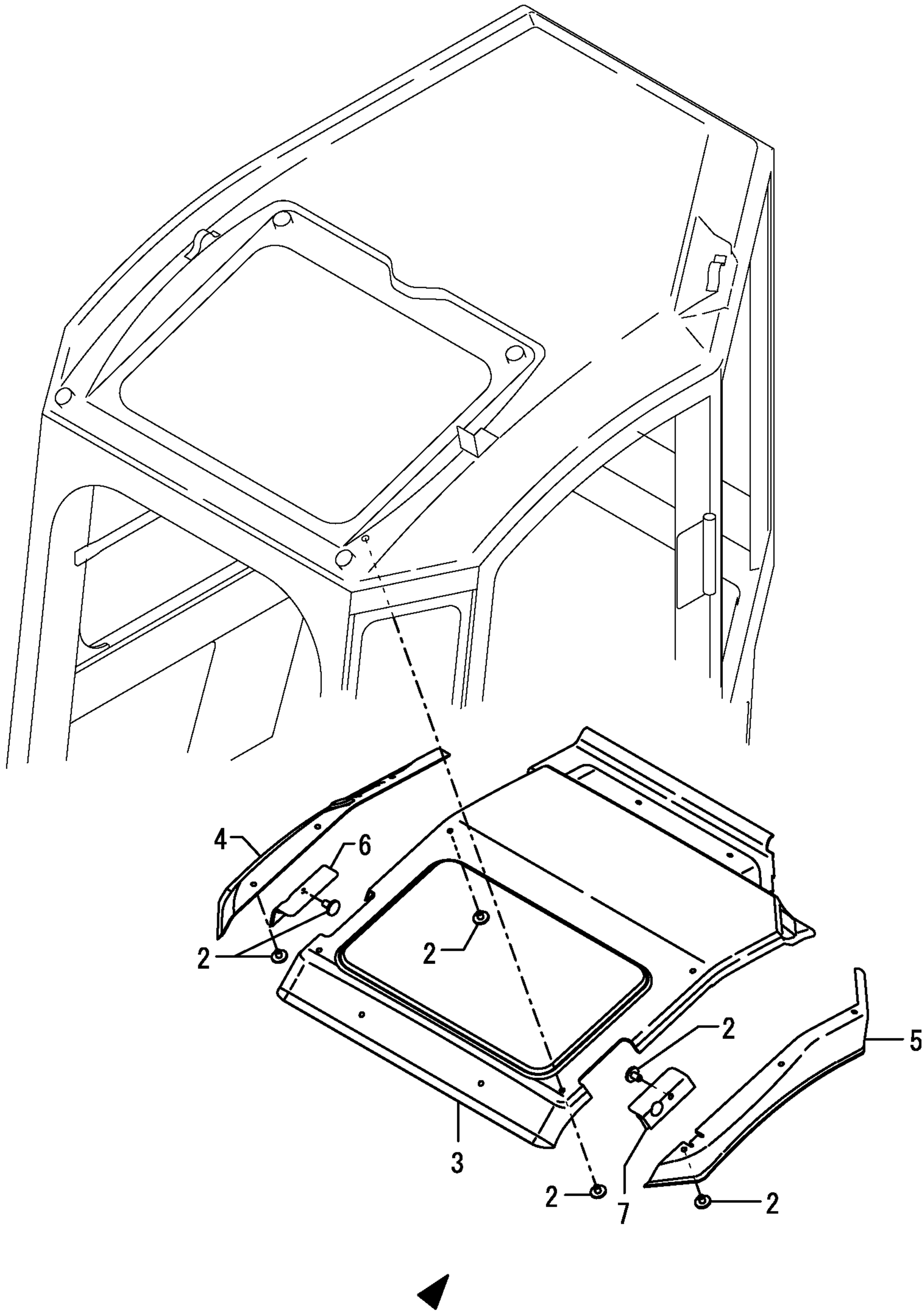

CABIN ASSY
172478-68800
Fig. 38 REF.NO.4
INC. Fig. 38 REF.NO.5
INC. Fig. 39 REF.NO.1
INC. Fig. 40 REF.NO.1
INC. Fig. 41 REF.NO.1
INC. Fig. 42 REF.NO.1,18
INC. Fig. 43 REF.NO.1
INC. Fig. 44 REF.NO.1

1 INC. 2～7

https://truckmanualshub.com/

```
1,2,,172455-68740,,"WINDOW GP",1,,,,,,,,,,,,,,,,,
2,3,,172455-67610,,SPACER,2,,,,,,,,,,,,,,,,,
3,3,,172455-67620,,"GLASS(F) LOW",1,,,,,,,,,,,,,,,,,
4,3,,172478-67630,,"GLASS LOW-RH",1,,,,,,,,,,,,,,,,,
5,3,,172455-67640,,"GLASS(RH) FRONT",1,,,,,,,,,,,,,,,,,
6,3,,172478-67640,,FINISHER,1,,,,,,,,,,,,,,,,,
7,3,,172455-67650,,"GLASS (LH) UPPER",1,,,,,,,,,,,,,,,,,
8,3,,172478-67650,,"DAM L500",1,,,,,,,,,,,,,,,,,
9,3,,172455-67660,,"GLASS (LH) LOWER",1,,,,,,,,,,,,,,,,,
10,3,,172478-67660,,"DAM L500",1,,,,,,,,,,,,,,,,,
11,3,,172455-67670,,"GLASS(LH) FRONT",1,,,,,,,,,,,,,,,,,
12,3,,172478-67670,,"DAM L1768",1,,,,,,,,,,,,,,,,,
13,3,,172455-67680,,"GLASS, REAR",1,,,,,,,,,,,,,,,,,
14,3,,172478-67680,,"SPACER B",5,,,,,,,,,,,,,,,,,
15,3,,172455-67690,,"COVER ROOF",1,,,,,,,,,,,,,,,,,
16,3,,172478-67690,,"SPACER C",21,,,,,,,,,,,,,,,,,
17,3,,172455-67700,,"SASH ASSY SIDE RH",1,,,,,,,,,,,,,,,,,,
18,3,,172455-67710,,"STOPPER RUBBER",2,,,,,,,,,,,,,,,,,
19,3,,172455-67730,,"RUN, GLASS",2,,,,,,,,,,,,,,,,,
20,3,,172455-67800,,"MLDG S.WINDOW",1,,,,,,,,,,,,,,,,,
21,3,,172455-67810,,"MLDG S.WINDOW",1,,,,,,,,,,,,,,,,,
22,3,,172455-67820,,SEAL,1,,,,,,,,,,,,,,,,,
```

https://truckmanualshub.com/

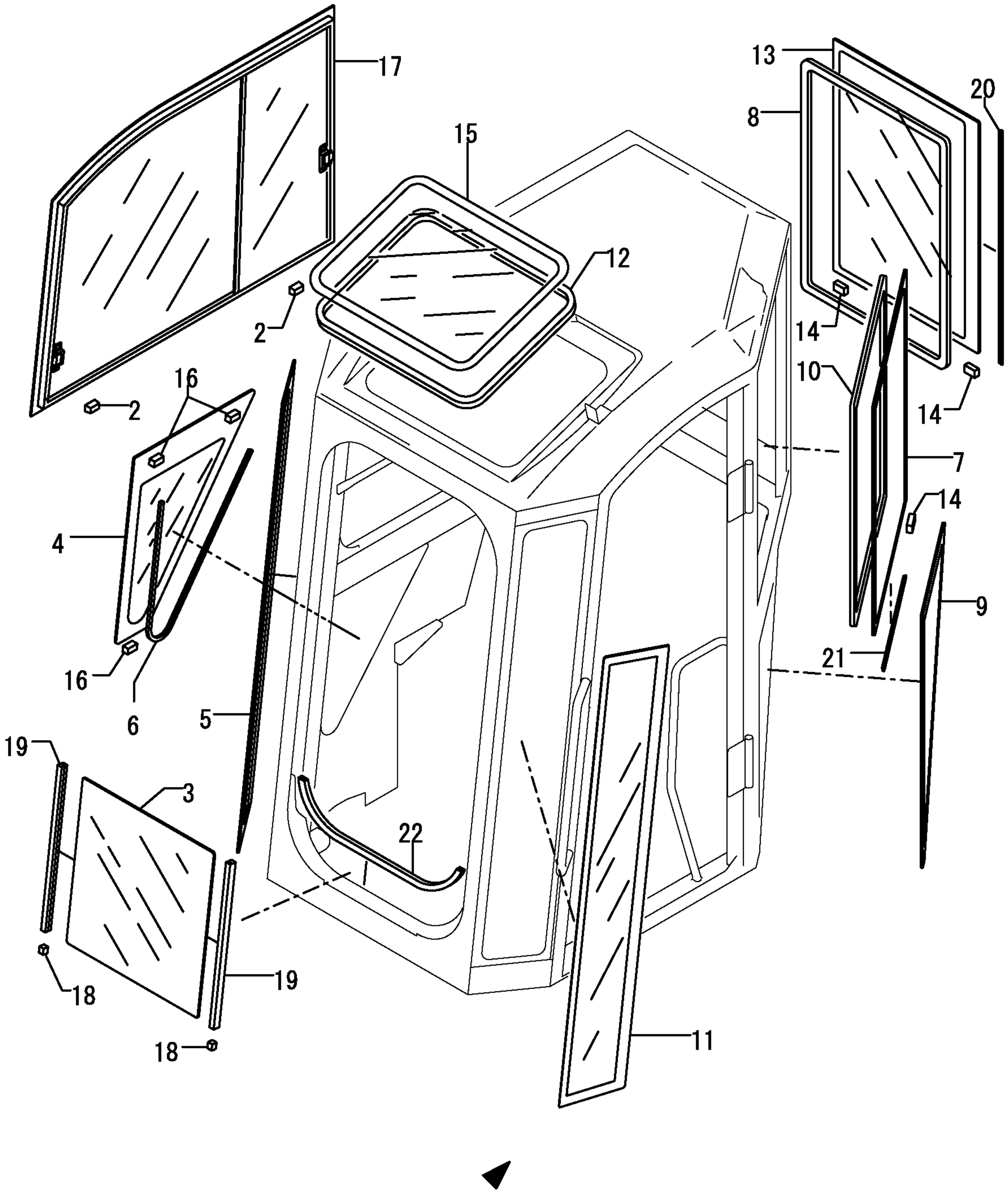

CABIN ASSY
172478-68800
Fig. 38 REF.NO.4
INC. Fig. 38 REF.NO.5
INC. Fig. 39 REF.NO.1
INC. Fig. 40 REF.NO.1
INC. Fig. 41 REF.NO.1
INC. Fig. 42 REF.NO.1,18
INC. Fig. 43 REF.NO.1
INC. Fig. 44 REF.NO.1

1

1 INC. 2～22

https://truckmanualshub.com/

```
1,2,,172478-68830,,"ELECTRIC GP(GREEN:83",1,,,,,,,,,,,,,,,,,
2,3,,172455-67860,,HARNESS,1,,,,,,,,,,,,,,,,
3,3,,172455-67870,,GROMMET,1,,,,,,,,,,,,,,,,
4,3,,172455-67880,,HARNESS-CURL,1,,,,,,,,,,,,,,,,
5,3,,172455-67890,,SCREW,1,,,,,,,,,,,,,,,,
6,3,,172455-67900,,"ROOM LAMP",1,,,,,,,,,,,,,,,,
7,3,,172455-67910,,"CLAMP HARNESS",15,,,,,,,,,,,,,,,,
8,3,,172455-67920,,"BRKT ROOM LAMP",1,,,,,,,,,,,,,,,,
9,3,,172455-67940,,BUSH,1,,,,,,,,,,,,,,,,
10,3,,172455-67970,,"WORKING LAMP",1,,,,,,,,,,,,,,,,
11,4,,172458-17420,,"BULB,12V 55W",1,,,,,,,,,,,,,,,,
12,3,,172455-67990,,ANT-ASSY,1,,,,,,,,,,,,,,,,
13,3,,172478-69010,,"COVER LIGHT(GREEN:83",1,,,,,,,,,,,,,,,,,
14,3,,172455-69020,,CLIP,1,,,,,,,,,,,,,,,,
15,3,,172455-69030,,SCREW,1,,,,,,,,,,,,,,,,
16,3,,26023-060162,,"SCREW M 6X 16",2,,,,,,,,,,,,,,,,
17,3,,26366-080002,,"NUT M 8",1,,,,,,,,,,,,,,,,
18,2,,172478-68840,,"WASHER GP",1,,,,,,,,,,,,,,,,
19,3,,172455-67290,,SCREW,2,,,,,,,,,,,,,,,,
20,3,,172455-67910,,"CLAMP HARNESS",3,,,,,,,,,,,,,,,,
21,3,,172478-68400,,"WINDOW WASHER ASSY",1,,,,,,,,,,,,,,,,,
22,4,,172478-68410,,"NOZZLE WASHER",1,,,,,,,,,,,,,,,,
23,4,,172478-68420,,"ADAPTER NOZZLE",1,,,,,,,,,,,,,,,,,
24,4,,172478-68430,,"HOSE WASHER",1,,,,,,,,,,,,,,,,,
```

https://truckmanualshub.com/

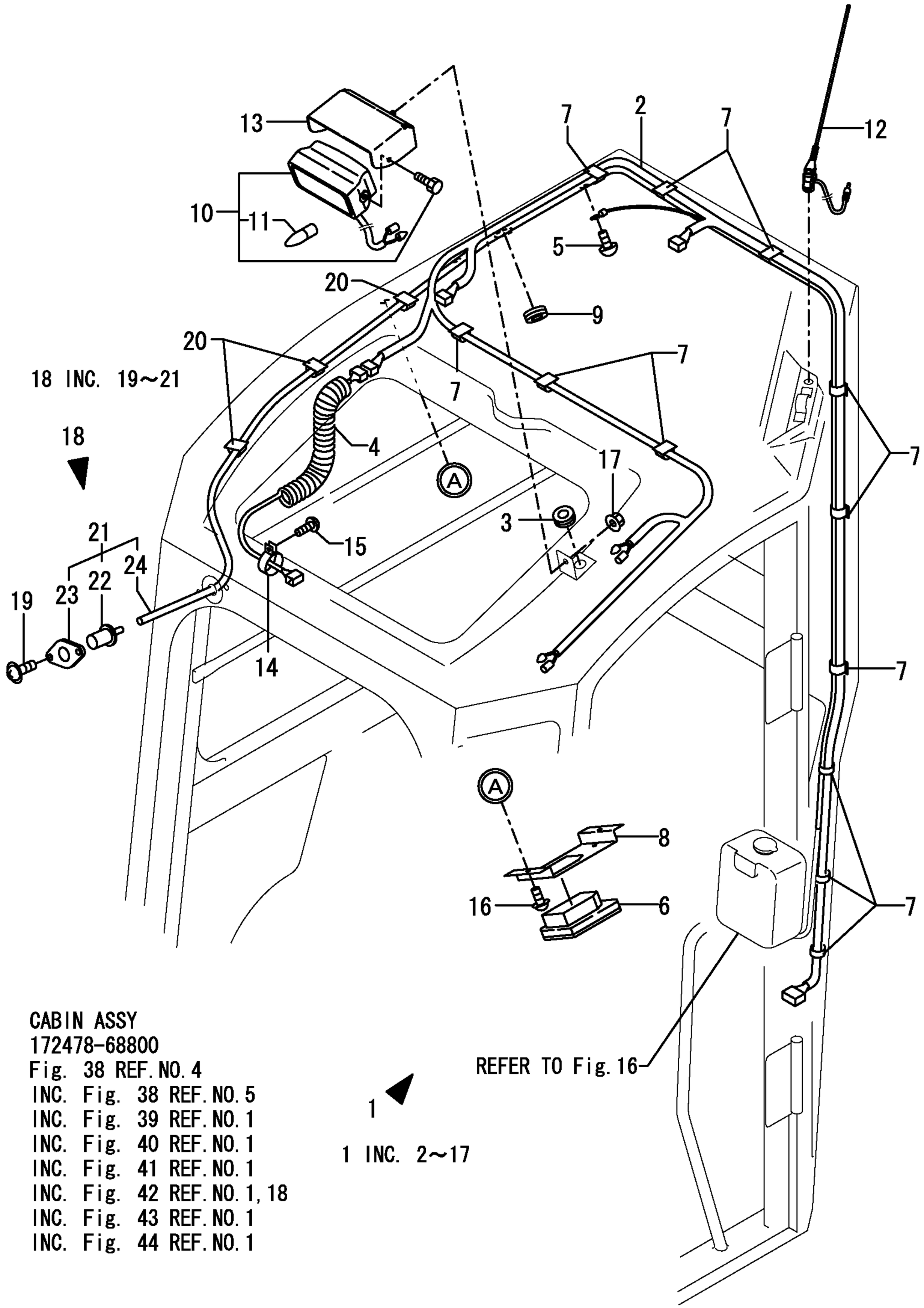

CABIN ASSY
172478-68800
Fig. 38 REF.NO.4
INC. Fig. 38 REF.NO.5
INC. Fig. 39 REF.NO.1
INC. Fig. 40 REF.NO.1
INC. Fig. 41 REF.NO.1
INC. Fig. 42 REF.NO.1,18
INC. Fig. 43 REF.NO.1
INC. Fig. 44 REF.NO.1

https://truckmanualshub.com/

```
1,2,,172455-68760,,"DOOR GP",1,,,,,,,,,,,,,,,,,
2,3,,172164-66170,,"KEY ASSY, CYLINDER",1,,,,,,,,,,,,,,,,,,
7,3,,172455-69110,,"DOOR ASSY",1,,,,,,,,,,,,,,,,,
8,3,,172455-69120,,"GLASS, DOOR (L)",1,,,,,,,,,,,,,,,,,
9,3,,172455-69130,,"GLASS, DOOR (U)",1,,,,,,,,,,,,,,,,,
10,3,,172455-69140,,NUT,4,,,,,,,,,,,,,,,,,
11,3,,172455-69150,,SEAL-RUBBER,1,,,,,,,,,,,,,,,,,
12,3,,172455-69160,,HOOK,1,,,,,,,,,,,,,,,,,
13,3,,172455-69170,,"COVER-DOOR IN",1,,,,,,,,,,,,,,,,,
14,3,,172455-69200,,TUBE,4,,,,,,,,,,,,,,,,,
15,3,,172455-69220,,DAM,1,,,,,,,,,,,,,,,,,
16,3,,172455-69250,,PIPE,4,,,,,,,,,,,,,,,,,
17,3,,172455-69260,,"MLDG S.WINDOW",1,,,,,,,,,,,,,,,,,
18,3,,172455-69270,,P/WASHER,2,,,,,,,,,,,,,,,,,
19,3,,172455-69290,,PACKING,4,,,,,,,,,,,,,,,,,
20,3,,172455-69300,,SCREW,3,,,,,,,,,,,,,,,,,
21,3,,172445-69400,,ROD,1,,,,,,,,,,,,,,,,,
22,3,,172162-69470,,"LOCK PLATE",1,,,,,,,,,,,,,,,,,
23,3,,172162-69480,,"LOCK ASSY",1,,,,,,,,,,,,,,,,,
24,3,,172162-69490,,PIN,1,,,,,,,,,,,,,,,,,
25,3,,172162-69500,,SPRING,1,,,,,,,,,,,,,,,,,
26,3,,172162-69510,,"HANDLE ASSY",1,,,,,,,,,,,,,,,,,
27,3,,172162-69520,,COVER,1,,,,,,,,,,,,,,,,,
28,3,,172162-69541,,"HANDLE,OUTER",1,,,,,,,,,,,,,,,,,
29,3,,172455-69640,,"BOLT 5X12",1,,,,,,,,,,,,,,,,,
30,3,,172455-69710,,NUT-SPRING,2,,,,,,,,,,,,,,,,,
31,3,,172176-69911,,PLATE,1,,,,,,,,,,,,,,,,,
32,3,,26013-060162,,"BOLT M 6X 16",3,,,,,,,,,,,,,,,,,
33,3,,26023-060122,,"SCREW M 6X 12",2,,,,,,,,,,,,,,,,,
34,3,,26023-060162,,"SCREW M 6X 16",4,,,,,,,,,,,,,,,,,
35,3,,26051-080002,,"NUT M 8",1,,,,,,,,,,,,,,,,,
36,3,,26116-080202,,"BOLT M 8X 20 PLATED",1,,,,,,,,,,,,,,,,,,
37,3,,26716-100002,,"NUT 10",1,,,,,,,,,,,,,,,,,
```

https://truckmanualshub.com/

CABIN ASSY
172478-68800
Fig. 38 REF.NO.4
INC. Fig. 38 REF.NO.5
INC. Fig. 39 REF.NO.1
INC. Fig. 40 REF.NO.1
INC. Fig. 41 REF.NO.1
INC. Fig. 42 REF.NO.1,18
INC. Fig. 43 REF.NO.1
INC. Fig. 44 REF.NO.1

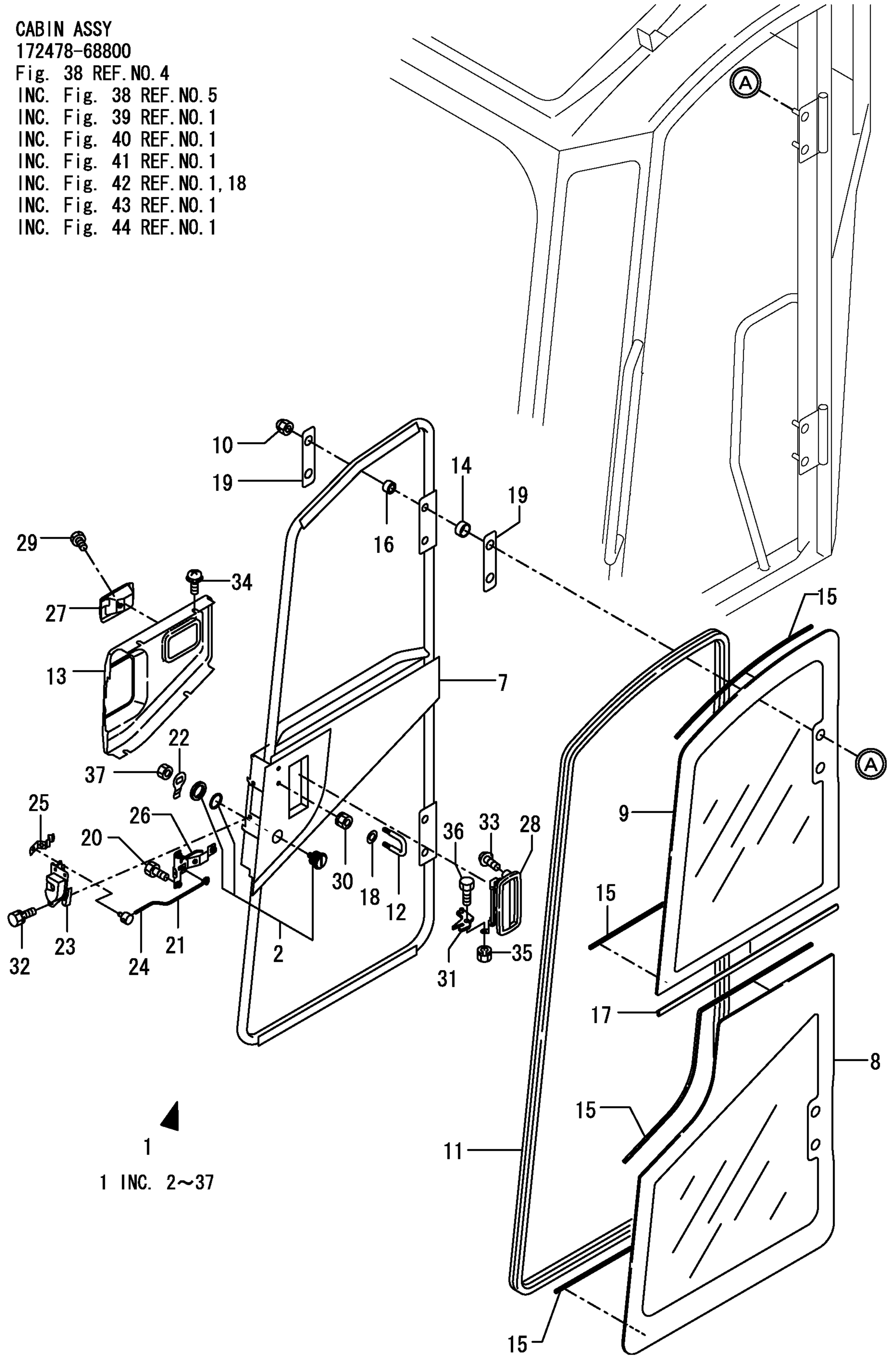

https://truckmanualshub.com/

```
1,2,,172463-68770,,"WINDOW ASSY, FRONT",1,,,,,,,,,,,,,,,,,
2,3,,172445-66750,,GRIP,2,,,,,,,,,,,,,,,,
3,3,,172455-67360,,SCREW(TORX),4,,,,,,,,,,,,,,,,
4,3,,172455-67910,,"CLAMP HARNESS",1,,,,,,,,,,,,,,,,
5,3,,172455-69020,,CLIP,2,,,,,,,,,,,,,,,,
6,3,,172463-69110,,"FRONT WINDOW CMP",1,,,,,,,,,,,,,,,,
7,3,,172463-69120,,"GLASS F/W",1,,,,,,,,,,,,,,,,
8,3,,172463-69130,,DAM,1,,,,,,,,,,,,,,,,
9,3,,172463-69140,,"BLADE ASSY",1,,,,,,,,,,,,,,,,
10,3,,172463-69150,,SCREW-TORX,12,,,,,,,,,,,,,,,,
11,3,,172463-69160,,"HOLDER ASSY,F/W",2,,,,,,,,,,,,,,,,
12,3,,172463-69170,,"BRACKET ASSY,RH",1,,,,,,,,,,,,,,,,
13,3,,172463-69180,,"BRACKET ASSY,LH",1,,,,,,,,,,,,,,,,
14,3,,172463-69190,,"LATCH PIN",2,,,,,,,,,,,,,,,,
15,3,,172463-69200,,SPRING,2,,,,,,,,,,,,,,,,
16,3,,172463-69210,,"LEVER ASSY,F/W",2,,,,,,,,,,,,,,,,
17,3,,172463-69220,,"LINK ASSY,RH",1,,,,,,,,,,,,,,,,
18,3,,172463-69230,,"LINK ASSY,LH",1,,,,,,,,,,,,,,,,
19,3,,172463-69240,,"WASHER 12.5X26",2,,,,,,,,,,,,,,,,
20,3,,172463-69250,,"WASHER 12.5X24",2,,,,,,,,,,,,,,,,
21,3,,172463-69260,,"GAS SPRING",2,,,,,,,,,,,,,,,,
22,3,,172463-69270,,"STOPPER,DOOR",1,,,,,,,,,,,,,,,,
23,3,,172463-69280,,"LATCH ASSY,RH",1,,,,,,,,,,,,,,,,
24,3,,172463-69290,,"LATCH ASSY,LH",1,,,,,,,,,,,,,,,,
25,3,,172463-69300,,FINISHER,1,,,,,,,,,,,,,,,,
26,3,,172455-69340,,"SEAL RUBBER",1,,,,,,,,,,,,,,,,
27,3,,172455-69350,,"FRAME STAY LOW.RH",1,,,,,,,,,,,,,,,,
28,3,,172455-69360,,"FRAME STAY LOW.LH",1,,,,,,,,,,,,,,,,
29,3,,172455-69370,,"ROLLER-F/W UPR",2,,,,,,,,,,,,,,,,
30,3,,172455-69380,,"MOTOR ASSY WIPER",1,,,,,,,,,,,,,,,,
31,3,,172455-69390,,"ARM, WIPER",1,,,,,,,,,,,,,,,,
32,3,,172455-69410,,"SET SCREW",2,,,,,,,,,,,,,,,,
33,3,,172455-69490,,"COVER WIPER-MOTOR",1,,,,,,,,,,,,,,,,
34,3,,172455-69530,,"RUBBER, SEAL",1,,,,,,,,,,,,,,,,
35,3,,172455-69540,,"STOPPER RUBBER",4,,,,,,,,,,,,,,,,
36,3,,172455-69560,,NUT,1,,,,,,,,,,,,,,,,
37,3,,172455-69600,,"HARNESS F/W",1,,,,,,,,,,,,,,,,
38,3,,22272-000060,,"CIRCLIP E- 6",4,,,,,,,,,,,,,,,,
39,3,,22272-000080,,"CIRCLIP E- 8",4,,,,,,,,,,,,,,,,
40,3,,22351-030012,,"SPRING PIN 3X12",2,,,,,,,,,,,,,,,,
41,3,,24550-012200,,"BUSH 12X20",4,,,,,,,,,,,,,,,,
```

https://truckmanualshub.com/

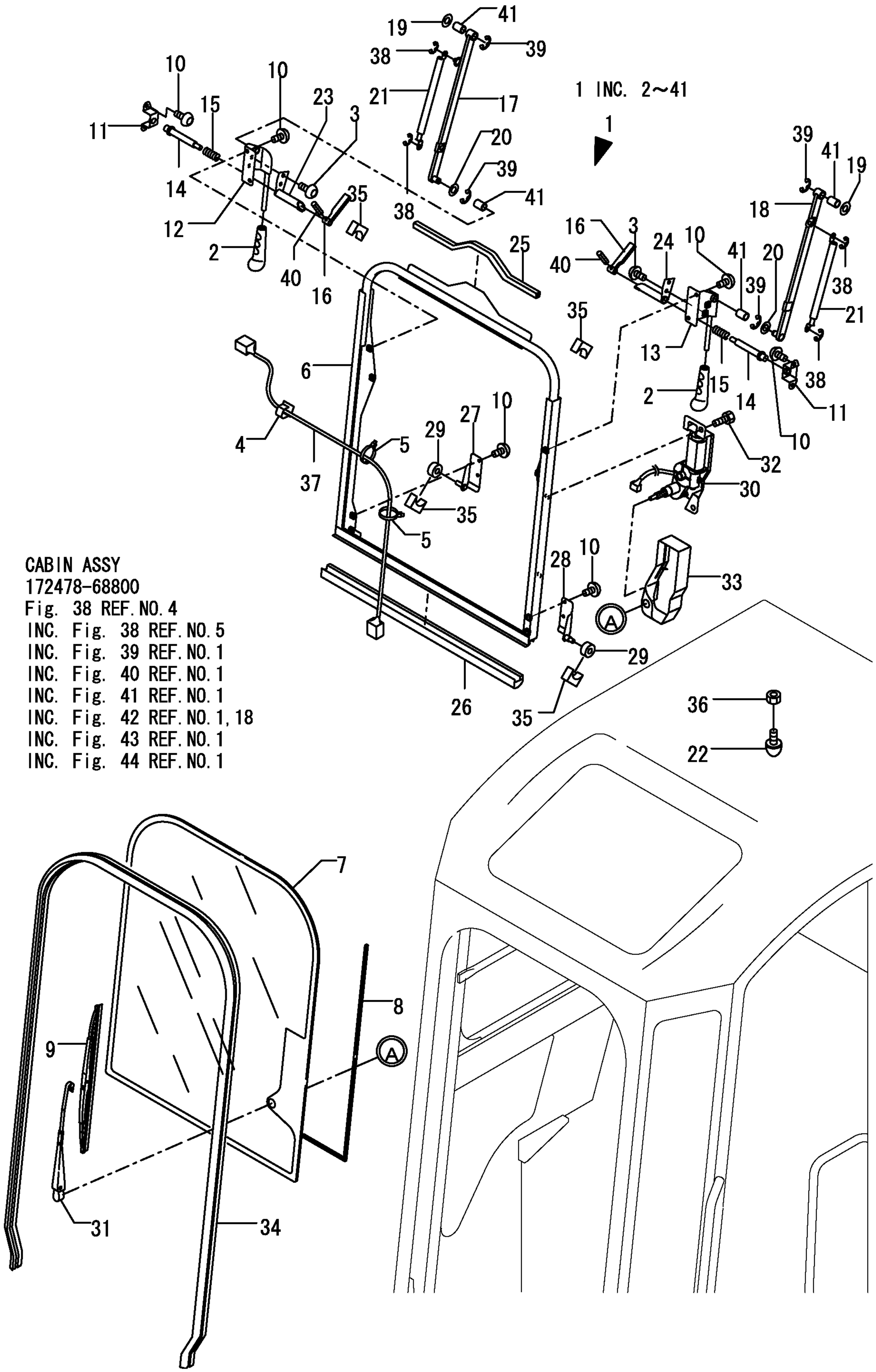

https://truckmanualshub.com/

```
1,1,,172187-71100,,"COVER, FLYWHEEL",1,,,,,,,,,,,,,,,,,
2,1,,26013-100302,,"BOLT M10X 30",12,,,,,,,,,,,,,,,,,
3,1,,172187-71200,,CUPRING,1,,,,,,,,,,,,,,,,,
4,1,,172187-71210,,"BOLT 14X 50",3,,,,,,,,,,,,,,,,,
5,1,,172478-73100,,"PUMP CMP",1,,,,,,,,,,,,,,,,,
15,2,,172187-73120,,"ROTARY GROUP",1,,,,,,,,,,,,,,,,,
79,2,,172187-73170,,"PUMP, GEAR",1,,,,,,,,,,,,,,,,,
90,2,,172478-73200,,"VALVE ASSY",1,,,,,,,,,,,,,,,,,
117,1,,772478-73100,,"SEAL KIT",1,,,,,,,,,,,,,,,,,
118,2,,172187-73240,,SEAL,1,,,,,,,,,,,,,,,,,
119,2,,172187-73250,,"O-RING 151",1,,,,,,,,,,,,,,,,,
120,2,,24315-000160,,"O-RING 1B P-16.0",1,,,,,,,,,,,,,,,,,
121,2,,24315-000200,,"O-RING 1B P-20.0",2,,,,,,,,,,,,,,,,,
122,2,,24315-000290,,"O-RING 1B P-29.0",2,,,,,,,,,,,,,,,,,
123,2,,24315-000080,,"O-RING 1B P-8.0",2,,,,,,,,,,,,,,,,,
124,2,,24315-000110,,"O-RING 1B P-11.0",2,,,,,,,,,,,,,,,,,
125,2,,172187-75680,,GASKET,1,,,,,,,,,,,,,,,,,
126,2,,24315-000050,,"O-RING 1B P-5.0",2,,,,,,,,,,,,,,,,,
127,2,,24321-001050,,"O-RING 1A G-105.0",1,,,,,,,,,,,,,,,,,,
128,2,,24311-000440,,"O-RING 1A P-44.0",1,,,,,,,,,,,,,,,,,
129,2,,172478-73180,,"O-RING YP40.87",1,,,,,,,,,,,,,,,,,
130,2,,24325-000900,,"O-RING 1B G-90.0",1,,,,,,,,,,,,,,,,,
131,2,,24321-000750,,"O-RING 1A G-75.0",1,,,,,,,,,,,,,,,,,
132,2,,172478-73300,,O-RING,2,,,,,,,,,,,,,,,,,
133,2,,24311-000160,,"O-RING 1A P-16.0",2,,,,,,,,,,,,,,,,,
134,2,,172141-74430,,O-RING,1,,,,,,,,,,,,,,,,,
135,1,,172164-73110,,VALVE,1,,,,,,,,,,,,,,,,,
136,1,,22217-160000,,"SPRING WASHER 16",4,,,,,,,,,,,,,,,,,
137,1,,26116-160452,,"BOLT M16X 45 PLATED",4,,,,,,,,,,,,,,,,,,
```

https://truckmanualshub.com/

SEAL SET
117 INC. 118~134

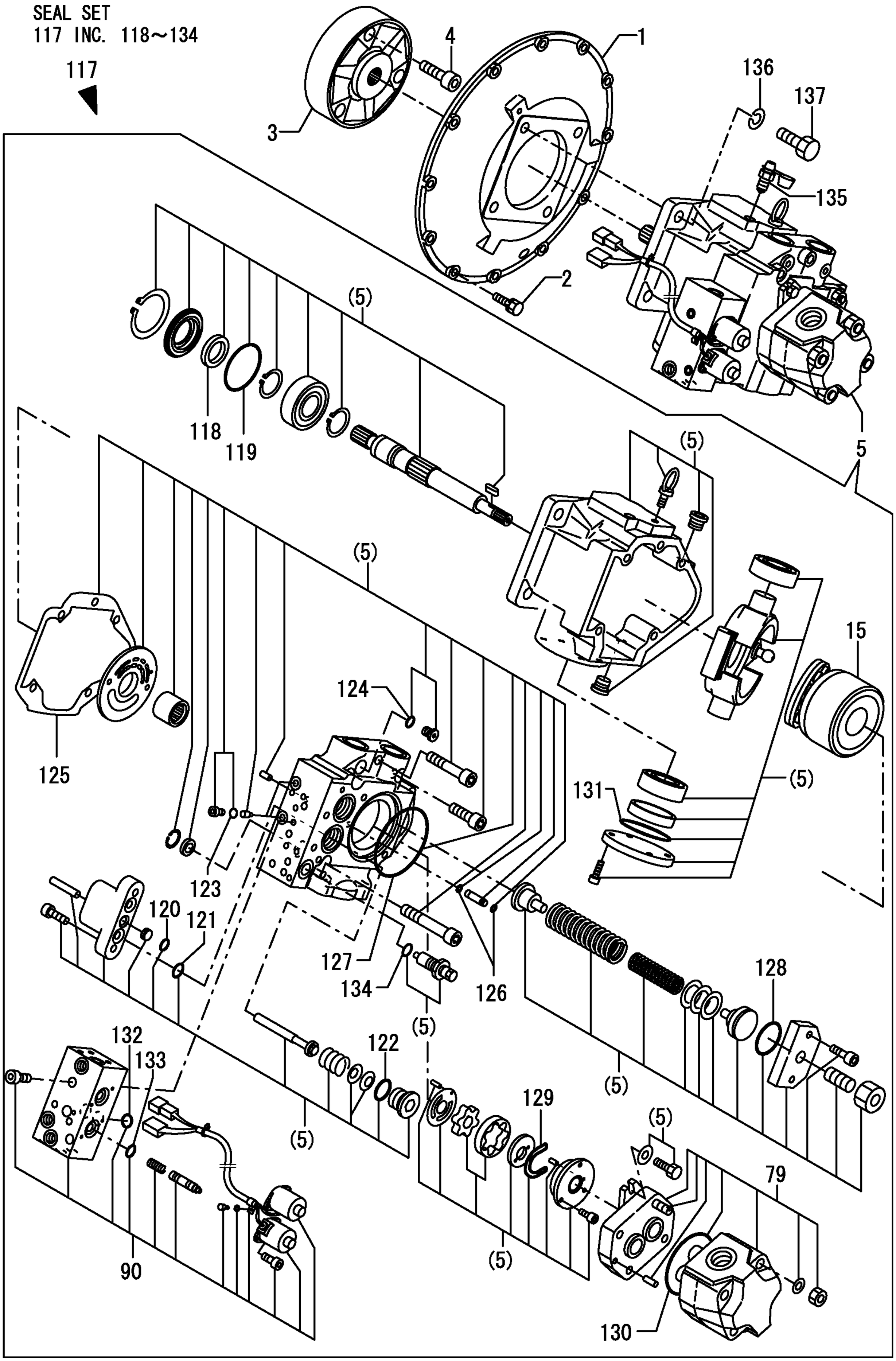

https://truckmanualshub.com/

```
1,1,,172020-10101-1,,"CYLINDER,BOOM   (87)",1,,,,,,,,,,,,,,,,,
2,2,,194145-04810,,"WASHER 10",1,,,,,,,,,,,,,,,,,
3,2,,172020-10112,,"TUBE,BOOM (GREEN:97)",1,,,,,,,,,,,,,,,,,
4,3,,172020-10220,,"BUSH 70 85",1,,,,,,,,,,,,,,,,,
5,3,,172162-82350,,"SEAL 70X85X6,DUST",2,,,,,,,,,,,,,,,,,
6,2,,172020-10141-1,,"TUBE     (YELLOW:87)",1,,,,,,,,,,,,,,,,,,
7,2,,172020-10230,,"HEAD 115 65",1,,,,,,,,,,,,,,,,,
9,3,,172020-10320,,"BUSH 65 40",1,,,,,,,,,,,,,,,,,
10,2,,172020-10251,,"LOD,BOOM",1,,,,,,,,,,,,,,,,,
11,3,,172020-10220,,"BUSH 70 85",1,,,,,,,,,,,,,,,,,
12,3,,172162-82350,,"SEAL 70X85X6,DUST",2,,,,,,,,,,,,,,,,,
13,2,,172020-10290,,"PISTON 115",1,,,,,,,,,,,,,,,,,
14,2,,172020-10370,,"U-NUT M45X3",1,,,,,,,,,,,,,,,,,
15,2,,172020-11600,,"SEAL SET 115X65",1,,,,,,,,,,,,,,,,,
16,3,,172020-10360,,"WASHER 115,LOCK",1,,,,,,,,,,,,,,,,,
17,3,,172020-10380,,"RING 82,SPRING",1,,,,,,,,,,,,,,,,,
18,3,,172020-11610,,"SEAL SET, HEAD",1,,,,,,,,,,,,,,,,,
25,3,,172020-11620,,"SEAL SET 115,PISTON",1,,,,,,,,,,,,,,,,,
28,2,,172478-72190,,"PLUNGER 72,CUSHION",1,,,,,,,,,,,,,,,,,
29,2,,172478-72250,,"COLLAR 45 59,CUSHION",1,,,,,,,,,,,,,,,,,
30,2,,24761-020000,,"NIPPLE PT1/8,GREASE",1,,,,,,,,,,,,,,,,,
31,2,,24761-050000,,"NIPPLE C,GREASE",1,,,,,,,,,,,,,,,,,
32,2,,26013-100252,,"BOLT W/WASHER M10X25",1,,,,,,,,,,,,,,,,,
33,1,,172162-61770,,"GUIDE,SLIDE",2,,,,,,,,,,,,,,,,,
34,1,,172187-72910-1,,"COVER,SLIDE     (87)",1,,,,,,,,,,,,,,,,,
35,1,,172187-72950-1,,"GUARD ASSY      (87)",1,,,,,,,,,,,,,,,,,
36,1,,22217-100000,,"SPRING WASHER 10",1,,,,,,,,,,,,,,,,,
37,1,,26014-100202,,"BOLT M10X 20",2,,,,,,,,,,,,,,,,,
38,1,,26116-100202,,"BOLT M10X 20 PLATED",1,,,,,,,,,,,,,,,,,
39,1,,933147-03400,,"WASHER, BRAKE ARM",1,,,,,,,,,,,,,,,,,
40,1,,933168-14170,,"SPRING 16",2,,,,,,,,,,,,,,,,,
```

https://truckmanualshub.com/

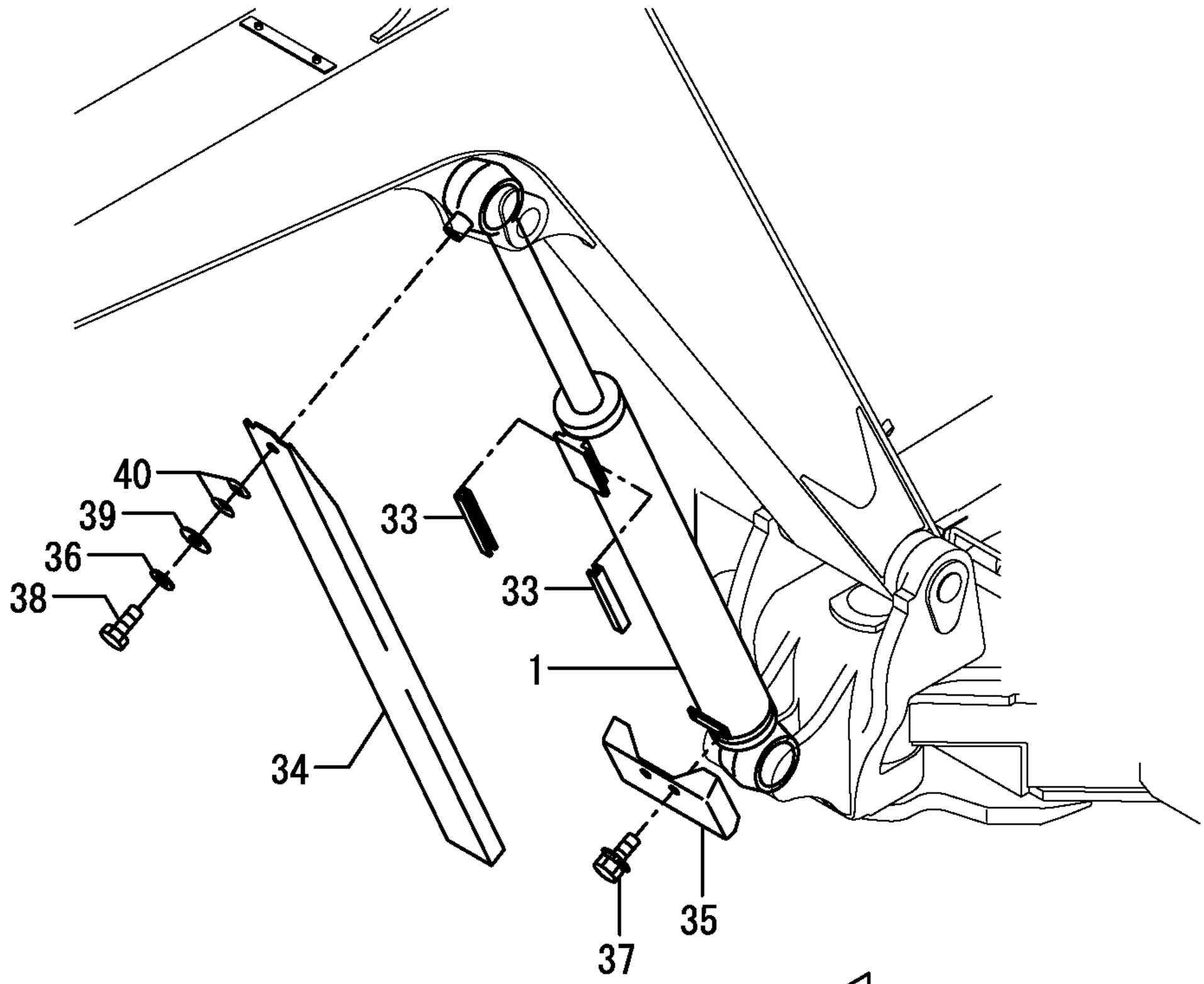

1 inc. 2～32

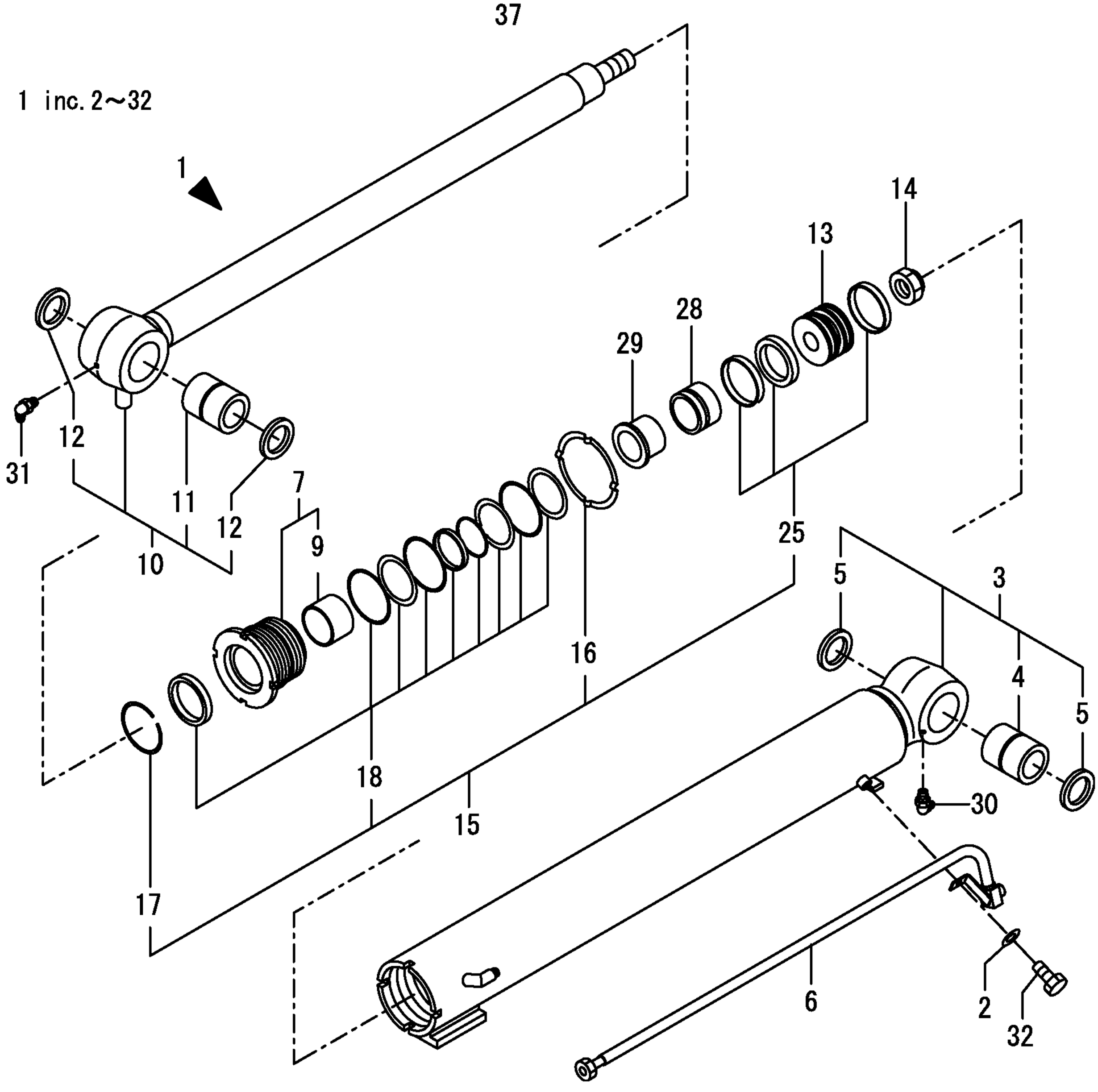

https://truckmanualshub.com/

```
1,1,,172478-72100-1,,"CYLINDER,ARM    (87)",1,,,,,,,,,,,,,,,,,,
2,2,,172020-10510-1,,"TUBE,ARM (YELLOW:87)",1,,,,,,,,,,,,,,,,,,
3,3,,172020-10610,,"BUSH 60 75 83",1,,,,,,,,,,,,,,,,,,
4,3,,172020-10620,,"SEAL 60 X 75 X 5",2,,,,,,,,,,,,,,,,,,
5,2,,172020-10720,,"PISTON 100",1,,,,,,,,,,,,,,,,,,
6,2,,172020-10750,,"PLUNGER 48,CUSHION",1,,,,,,,,,,,,,,,,,,
7,2,,172020-10760,,"COLLAR, CUSHION",1,,,,,,,,,,,,,,,,,,
8,2,,172020-10770,,SPACER,1,,,,,,,,,,,,,,,,,,
9,2,,172020-10780,,"COVER, STOPPER",1,,,,,,,,,,,,,,,,,,
10,2,,172020-10790,,STOPPER,2,,,,,,,,,,,,,,,,,,
11,2,,172020-10810,,"U-NUT M42 X 3",1,,,,,,,,,,,,,,,,,,
12,2,,172478-72110,,"LOD,ARM",1,,,,,,,,,,,,,,,,,,
13,3,,172020-10620,,"SEAL 60 X 75 X 5",2,,,,,,,,,,,,,,,,,,
14,3,,172020-10680,,"BUSH 60 75 58",1,,,,,,,,,,,,,,,,,,
15,2,,172478-72150,,"HEAD 100 65",1,,,,,,,,,,,,,,,,,,
16,3,,172020-10320,,"BUSH 65 40",1,,,,,,,,,,,,,,,,,,
18,2,,172478-72170,,"KIT,CYL SEAL 100X65",1,,,,,,,,,,,,,,,,,,
19,3,,172020-10380,,"RING 82,SPRING",1,,,,,,,,,,,,,,,,,,
20,3,,172020-10800,,"WASHER 100,LOCK",1,,,,,,,,,,,,,,,,,,
21,3,,172020-11650,,"SEAL SET, PISTON",1,,,,,,,,,,,,,,,,,,
25,3,,172478-72180,,"KIT,HEAD SEAL 100X65",1,,,,,,,,,,,,,,,,,,
32,2,,172478-72190,,"PLUNGER 72,CUSHION",1,,,,,,,,,,,,,,,,,,
33,2,,22242-000340,,"CIRCLIP   34",1,,,,,,,,,,,,,,,,,,
34,2,,24761-040000,,"NIPPLE B,GREASE",1,,,,,,,,,,,,,,,,,,
```

https://truckmanualshub.com/

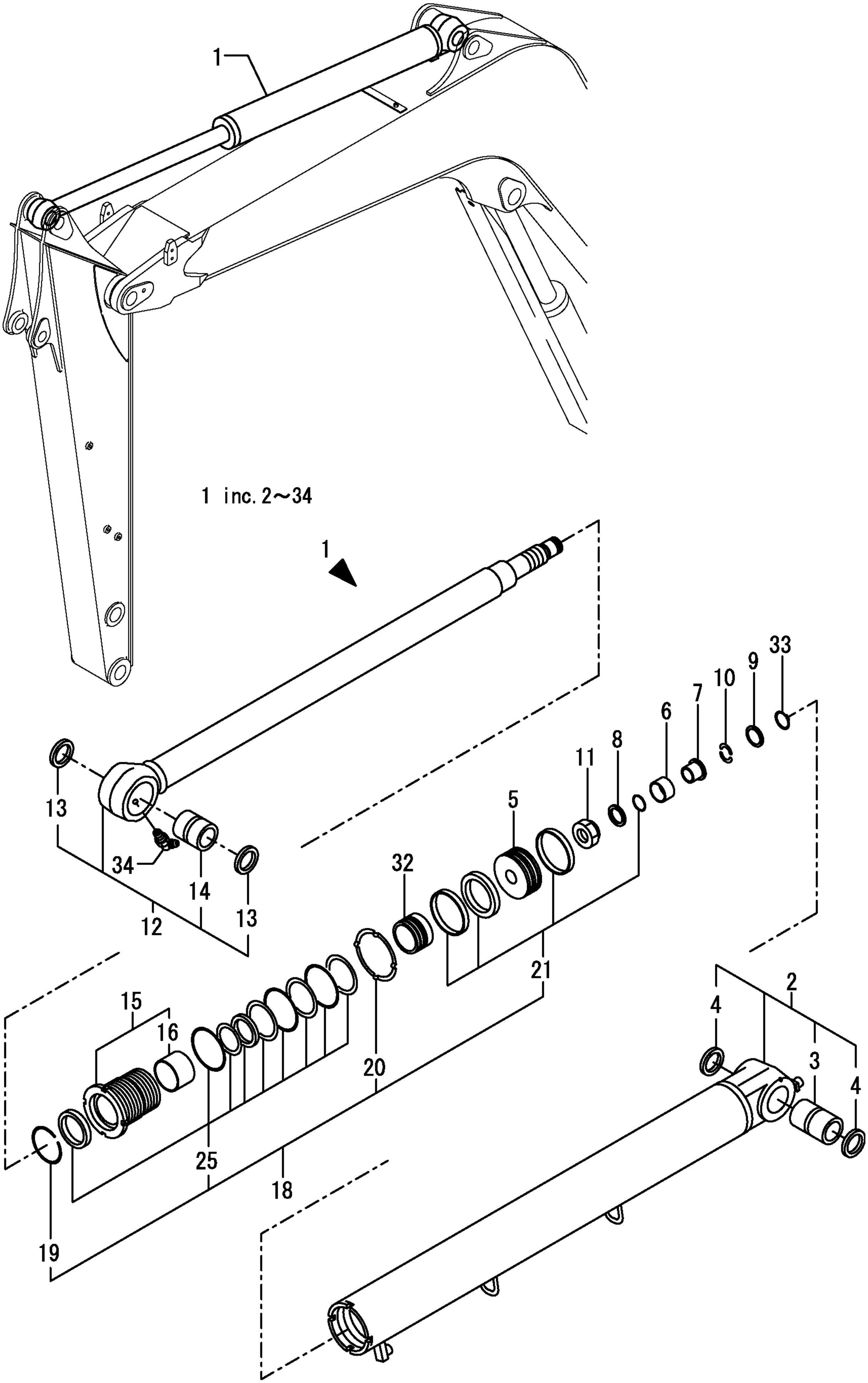

https://truckmanualshub.com/

```
1,1,,172020-10900-1,,"CYLINDER,BUCKET (87)",1,,,,,,,,,,,,,,,,,
2,2,,194145-04810,,"WASHER 10",1,,,,,,,,,,,,,,,,
3,2,,172020-10910-1,,"TUBE,BUCKET(YELLOW87",1,,,,,,,,,,,,,,,,,
4,3,,172151-72591,,"BUSH 50X60",1,,,,,,,,,,,,,,,,
5,3,,172165-81760,,"SEAL 50X60X4, DUST",2,,,,,,,,,,,,,,,,
6,2,,172020-10940-1,,"TUBE     (YELLOW:87)",1,,,,,,,,,,,,,,,,,
7,2,,172020-11000,,"ROD,BUCKET",1,,,,,,,,,,,,,,,,
8,3,,172020-10620,,"SEAL 60 X 75 X 5",2,,,,,,,,,,,,,,,,
9,3,,172020-11030,,"BUSH 60 58",1,,,,,,,,,,,,,,,,
10,2,,172020-11040,,"HEAD 90 55",1,,,,,,,,,,,,,,,,
12,3,,172151-72240,,"BUSH 55 35, ROD",1,,,,,,,,,,,,,,,,
13,2,,172020-11060,,"PISTON 90",1,,,,,,,,,,,,,,,,
14,2,,172020-11660,,"SEAL SET 90X55",1,,,,,,,,,,,,,,,,
15,3,,172020-11070,,"WASHER 90,LOCK",1,,,,,,,,,,,,,,,,
16,3,,172020-11670,,"SEAL SET 90X55,HEAD",1,,,,,,,,,,,,,,,,
23,3,,172020-11680,,"SEAL SET 90,PISTON",1,,,,,,,,,,,,,,,,
26,3,,933126-00500,,"RING 72, SPRING",1,,,,,,,,,,,,,,,,
27,2,,172151-72270,,"U-NUT M39",1,,,,,,,,,,,,,,,,
28,2,,24761-020000,,"NIPPLE PT1/8,GREASE",1,,,,,,,,,,,,,,,,
29,2,,24761-050000,,"NIPPLE C,GREASE",1,,,,,,,,,,,,,,,,
30,2,,26013-100252,,"BOLT W/WASHER M10X25",1,,,,,,,,,,,,,,,,
```

https://truckmanualshub.com/

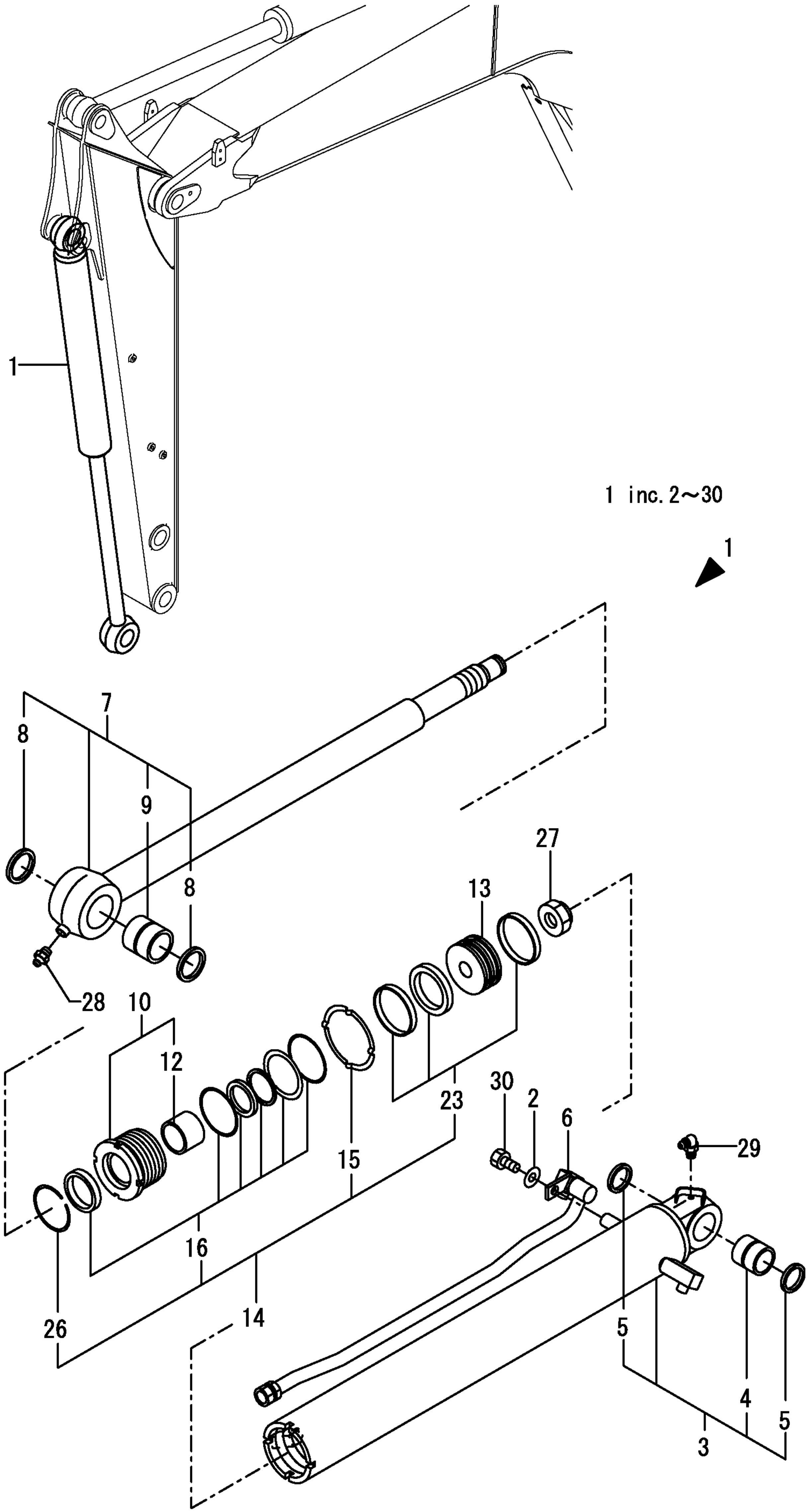

https://truckmanualshub.com/

```
1,1,,172020-11151-1,,"CYLINDER,SWING  (82)",1,,,,,,,,,,,,,,,,,
2,2,,172020-10730,,"PLUNGER 64A,CUSHION",1,,,,,,,,,,,,,,,,,
3,2,,172020-10810,,"U-NUT M42 X 3",1,,,,,,,,,,,,,,,,,
4,2,,172020-10860,,"COLLAR, CUSHION",1,,,,,,,,,,,,,,,,,
5,2,,172020-11161-1,,"TUBE,SWING(GREEN:82)",1,,,,,,,,,,,,,,,,,
6,3,,172020-10620,,"SEAL 60 X 75 X 5",2,,,,,,,,,,,,,,,,,
7,3,,172020-11230,,"BUSH 60 63 A",1,,,,,,,,,,,,,,,,,
8,2,,172020-11250,,"ROD,SWING",1,,,,,,,,,,,,,,,,,
9,3,,172020-10620,,"SEAL 60 X 75 X 5",2,,,,,,,,,,,,,,,,,
10,3,,172020-11280,,"BUSH 60 60 B",1,,,,,,,,,,,,,,,,,
11,2,,172020-11300,,"HEAD CMP 120 60",1,,,,,,,,,,,,,,,,,
13,3,,172445-72480,,"ROD BUSH 60 35",1,,,,,,,,,,,,,,,,,
14,2,,172020-11320,,"PISTON 120",1,,,,,,,,,,,,,,,,,
15,2,,172020-11340,,"RING 44-1.6",1,,,,,,,,,,,,,,,,,
16,2,,172020-11690,,"KIT,CYL SEAL120X60",1,,,,,,,,,,,,,,,,,
17,3,,172020-11350,,"ROCK WASHER 120",1,,,,,,,,,,,,,,,,,
18,3,,172020-11700,,"SET,HEAD SEAL 120X60",1,,,,,,,,,,,,,,,,,
25,3,,172020-11710,,"SET,PISTON SEAL 120",1,,,,,,,,,,,,,,,,,
29,3,,172445-72450,,"RING 77",1,,,,,,,,,,,,,,,,,
30,2,,172423-72520,,COLLAR,1,,,,,,,,,,,,,,,,,
31,2,,172423-72530,,SPACER,1,,,,,,,,,,,,,,,,,
32,2,,172423-72540,,STOPPER,2,,,,,,,,,,,,,,,,,
33,2,,172423-72550,,"CIRCLIP 28",1,,,,,,,,,,,,,,,,,
34,2,,24761-050000,,"NIPPLE C,GREASE",1,,,,,,,,,,,,,,,,,
```

https://truckmanualshub.com/

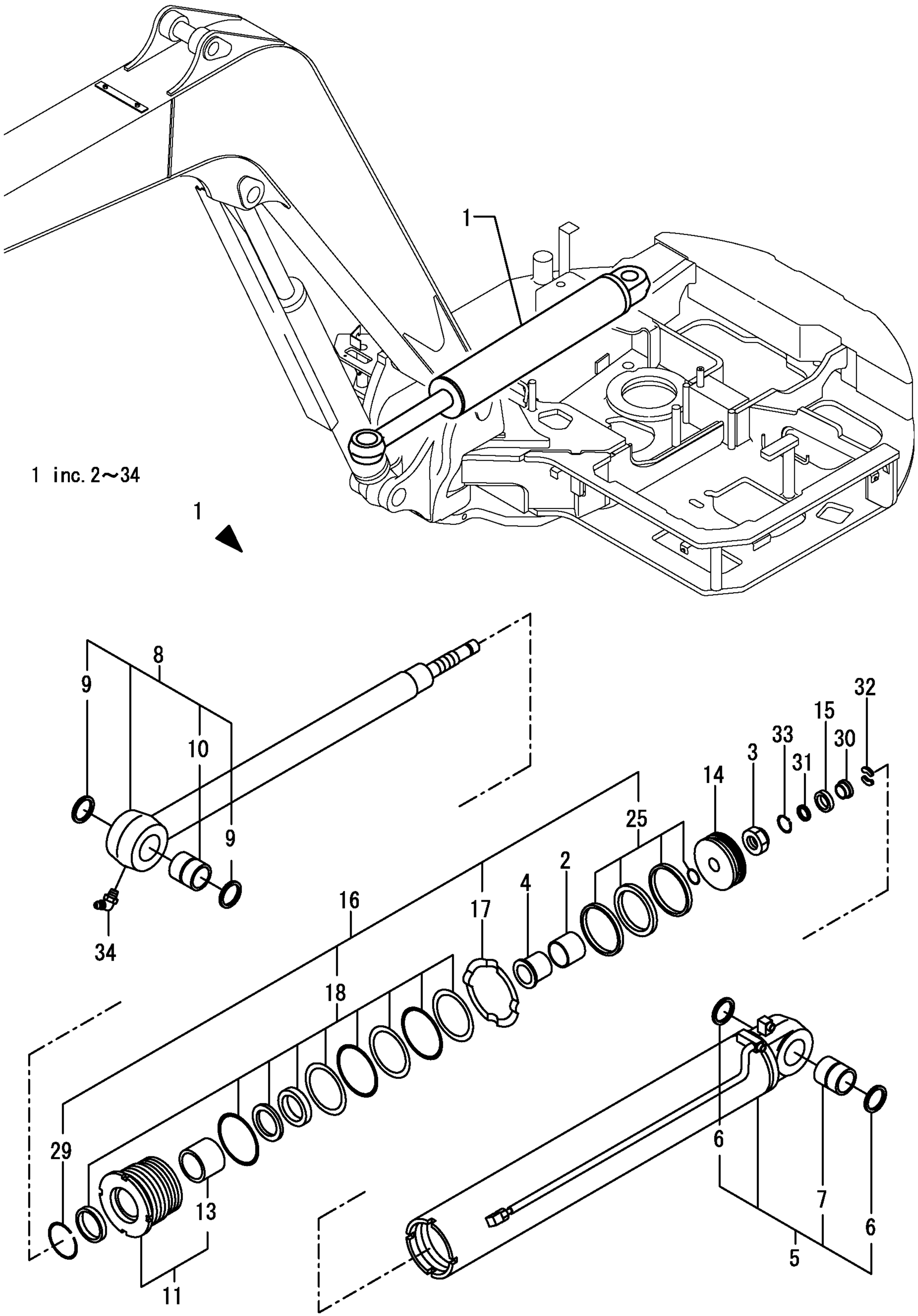

https://truckmanualshub.com/

```
1,1,,172478-72200-1,,"CYLINDER,BLADE  (82)",1,,,,,,,,,,,,,,,,,
2,2,,172020-11470,,"ROD ASSY, BLADE",1,,,,,,,,,,,,,,,,,
3,3,,172020-10620,,"SEAL 60 X 75 X 5",2,,,,,,,,,,,,,,,,,
4,3,,172020-11450,,"BUSH 60 68",1,,,,,,,,,,,,,,,,,
5,2,,172020-11500,,"HEAD 130 65",1,,,,,,,,,,,,,,,,,
6,3,,172020-10320,,"BUSH 65 40",1,,,,,,,,,,,,,,,,,
8,2,,172020-11520,,"PISTON 130",1,,,,,,,,,,,,,,,,,
9,2,,172020-11540,,"U-NUT M48X3",1,,,,,,,,,,,,,,,,,
10,2,,172020-11720,,"SEAL SET 130X65,CYL.",1,,,,,,,,,,,,,,,,,
11,3,,172020-10380,,"RING 82,SPRING",1,,,,,,,,,,,,,,,,,
12,3,,172020-11530,,"WASHER 130,LOCK",1,,,,,,,,,,,,,,,,,
13,3,,172020-11730,,"SEAL SET 130X65,HEAD",1,,,,,,,,,,,,,,,,,
20,3,,172020-11740,,"SEAL SET 130,PISTON",1,,,,,,,,,,,,,,,,,
23,2,,172478-72210-1,,"TUBE,BLADE(GREEN:82)",1,,,,,,,,,,,,,,,,,
24,3,,172020-10620,,"SEAL 60 X 75 X 5",2,,,,,,,,,,,,,,,,,
25,3,,172020-11450,,"BUSH 60 68",1,,,,,,,,,,,,,,,,,
26,1,,172187-72891-1,,"COVER ASSY,BLADE(82)",1,,,,,,,,,,,,,,,,,
27,1,,26014-100202,,"BOLT M10X 20",4,,,,,,,,,,,,,,,,,
```

https://truckmanualshub.com/

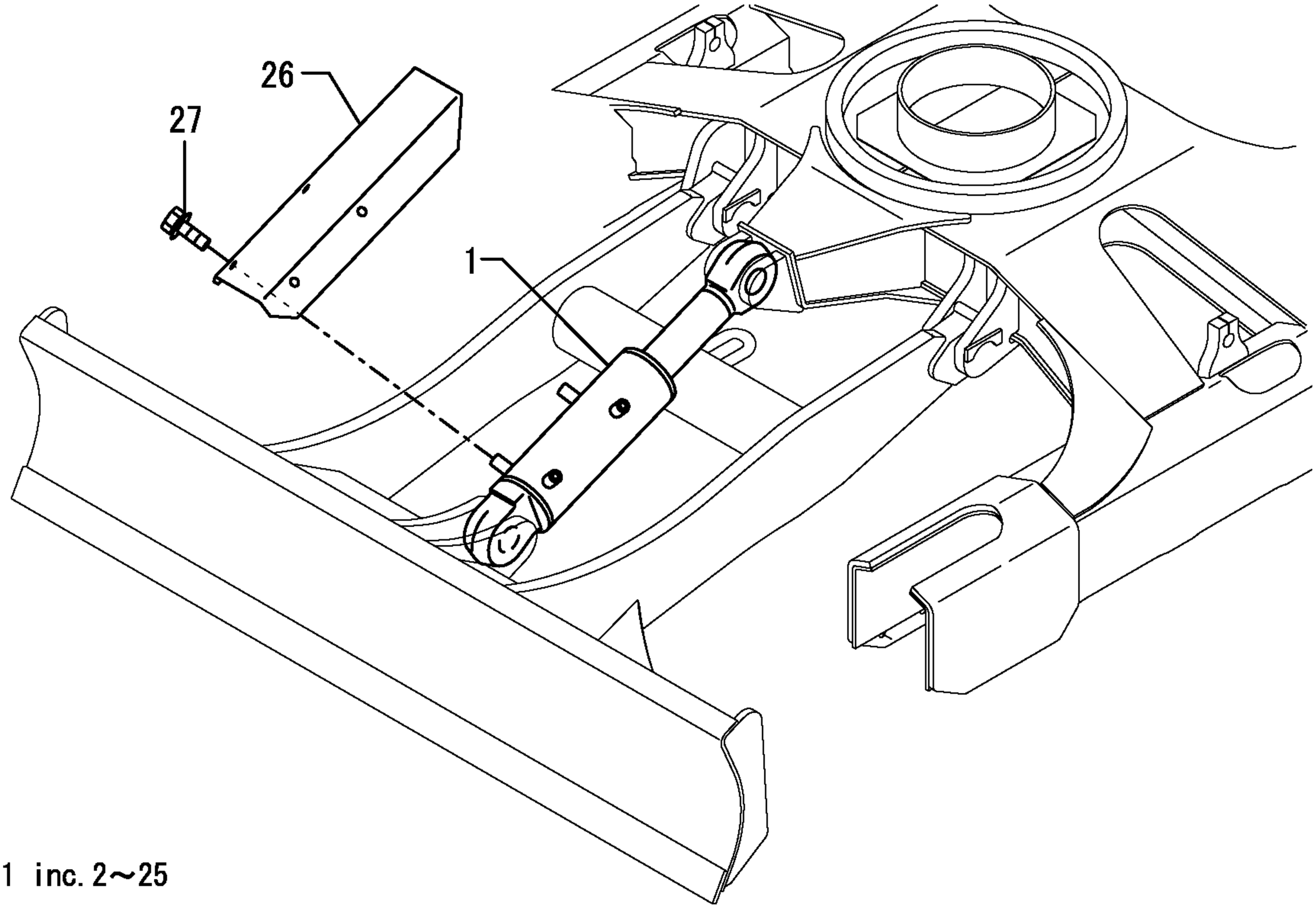

1 inc. 2～25

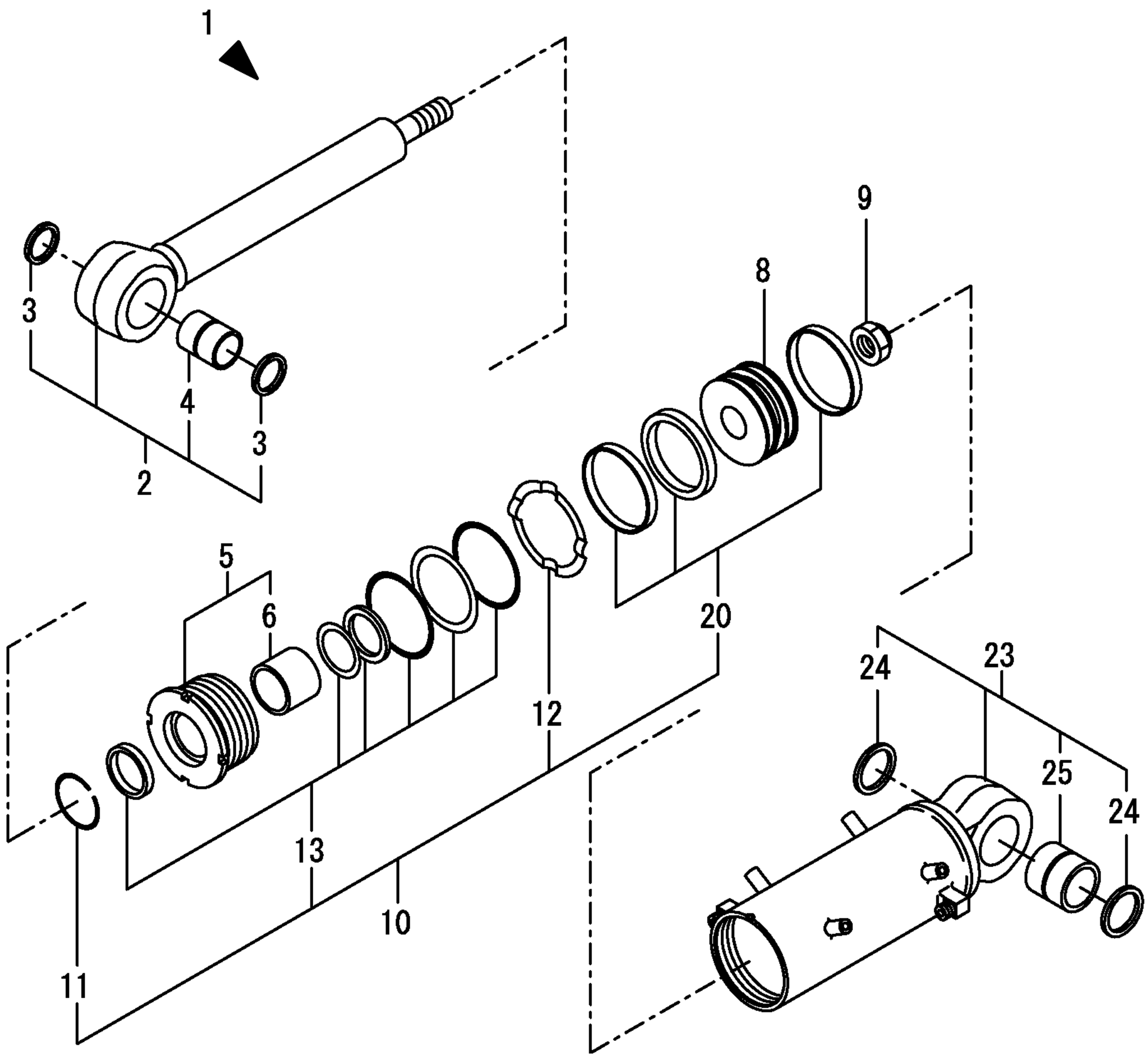

https://truckmanualshub.com/

```
1,1,,172479-73300,,"MOTOR ASSY,DRIVE",2,,,,,,,,,,,,,,,,,
2,2,,172479-73010,,"SEAL KIT",2,,,,,,,,,,,,,,,,,
3,3,,172479-73450,,O-RING,2,,,,,,,,,,,,,,,,,
4,3,,172479-73460,,"FLOATING SEAL KIT",2,,,,,,,,,,,,,,,,,,
5,3,,172479-73630,,"OIL SEAL",2,,,,,,,,,,,,,,,,,
6,3,,172479-73640,,O-RING,2,,,,,,,,,,,,,,,,,
7,3,,172479-73650,,O-RING,2,,,,,,,,,,,,,,,,,
8,3,,172479-73910,,"PISTON SEAL",4,,,,,,,,,,,,,,,,,
9,3,,172479-73920,,"BACK UP RING",8,,,,,,,,,,,,,,,,,
10,3,,172479-73930,,"BACK UP RING",8,,,,,,,,,,,,,,,,,
11,3,,24315-000080,,"O-RING 1B P-8.0",4,,,,,,,,,,,,,,,,,
12,3,,24315-000080,,"O-RING 1B P-8.0",4,,,,,,,,,,,,,,,,,
13,3,,24315-000120,,"O-RING 1B P-12.0",4,,,,,,,,,,,,,,,,,
14,3,,24315-000140,,"O-RING 1B P-14.0",6,,,,,,,,,,,,,,,,,
15,3,,24315-000140,,"O-RING 1B P-14.0",8,,,,,,,,,,,,,,,,,
16,3,,24315-000180,,"O-RING 1B P-18.0",12,,,,,,,,,,,,,,,,,,
17,3,,24315-000260,,"O-RING 1B P-26.0",4,,,,,,,,,,,,,,,,,
18,3,,24321-002300,,"O-RING 1A G-230.0",2,,,,,,,,,,,,,,,,,,
56,2,,172479-73730,,"FLANGE,REAR",2,,,,,,,,,,,,,,,,,
82,1,,22217-160000,,"SPRING WASHER 16",24,,,,,,,,,,,,,,,,,
83,1,,26116-160452,,"BOLT M16X 45 PLATED",24,,,,,,,,,,,,,,,,,,
```

https://truckmanualshub.com/

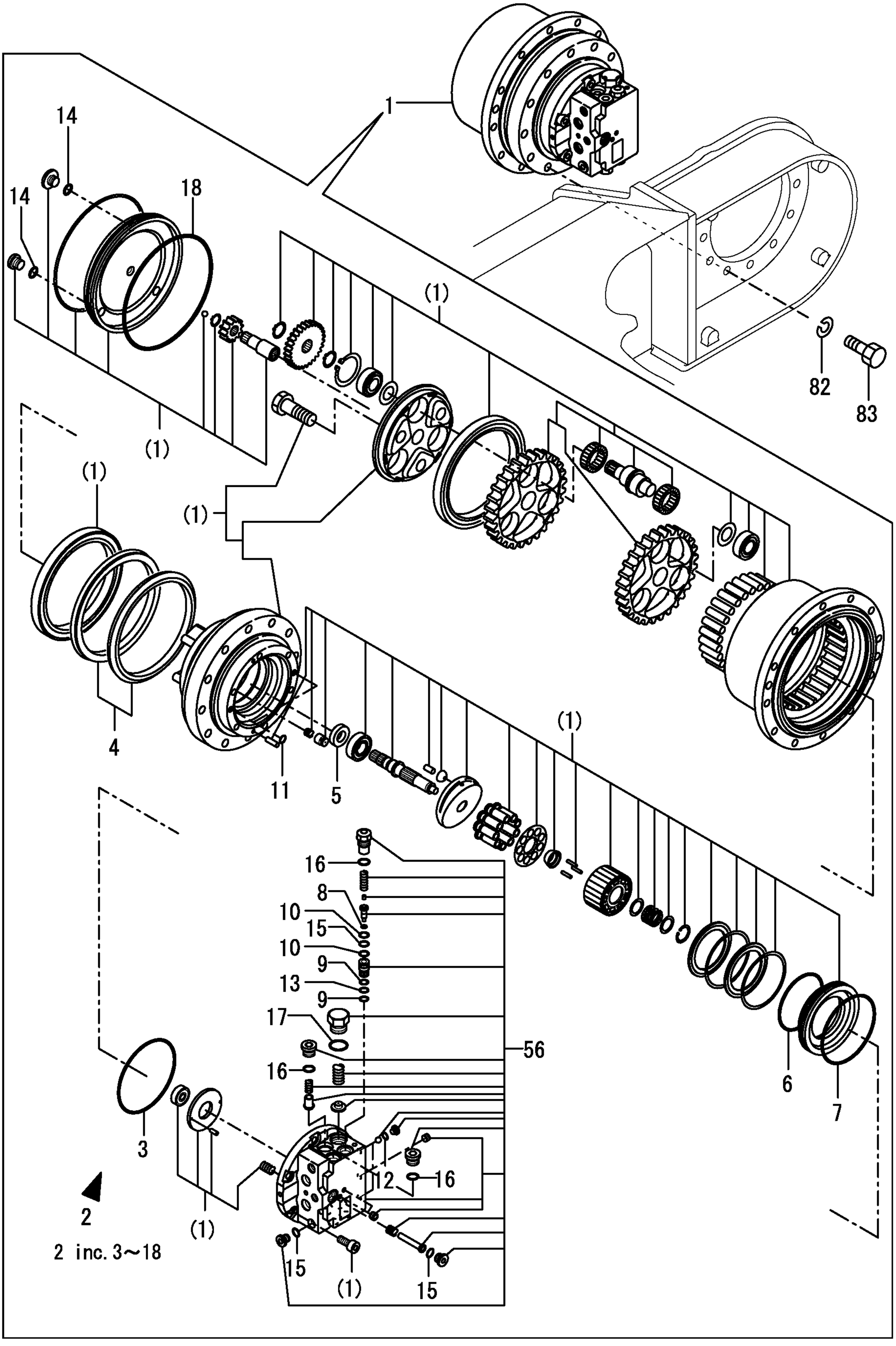

https://truckmanualshub.com/

```
1,1,,172187-73311,,"MOTOR ASSY, TURNING",1,,,,,,,,,,,,,,,,,
2,2,,172187-73370,,"REDUCTION GEAR",1,,,,,,,,,,,,,,,,,
4,3,,172162-71490,,"BEARING,TAPER ROLLER",1,,,,,,,,,,,,,,,,,,
7,3,,172162-71520,,"SEAL,OIL",1,,,,,,,,,,,,,,,,,
8,3,,172162-71530,,"BEARING,TAPER ROLLER",1,,,,,,,,,,,,,,,,,,
23,3,,172187-73380,,SHAFT,1,,,,,,,,,,,,,,,,,
25,3,,26450-120952,,"BOLT M12X95,HEX.SCKT",6,,,,,,,,,,,,,,,,,,
26,2,,172187-73411,,"MOTOR ASSY, HYD.OIL",1,,,,,,,,,,,,,,,,,,
27,3,,172162-71711,,"BEARING, NEEDLE",1,,,,,,,,,,,,,,,,,
36,3,,172162-71880,,"GAUGE COMP.,LEVEL",1,,,,,,,,,,,,,,,,,,
43,3,,172176-73370,,"TEFLON RING",2,,,,,,,,,,,,,,,,,
44,3,,172187-73420,,"SEAL KIT",1,,,,,,,,,,,,,,,,,
45,4,,172162-71740,,O-RING,1,,,,,,,,,,,,,,,,,
46,4,,172162-71760,,O-RING,1,,,,,,,,,,,,,,,,,
47,4,,172162-71890,,"OIL SEAL",1,,,,,,,,,,,,,,,,,
48,4,,172162-71930,,RING,2,,,,,,,,,,,,,,,,,
49,4,,172162-71950,,"RING, BACK UP",2,,,,,,,,,,,,,,,,,
50,4,,172164-73860,,O-RING,1,,,,,,,,,,,,,,,,,
51,4,,24315-000140,,"O-RING 1B P-14.0",1,,,,,,,,,,,,,,,,,
52,4,,24315-000210,,"O-RING 1B P 21",2,,,,,,,,,,,,,,,,,
53,4,,24315-000260,,"O-RING 1B P-26.0",2,,,,,,,,,,,,,,,,,,
54,3,,172165-73430,,BEARING,1,,,,,,,,,,,,,,,,,
57,3,,172187-73440,,"RELIEF, 210-60",2,,,,,,,,,,,,,,,,,
58,3,,172165-73451,,"TEFLON RING",4,,,,,,,,,,,,,,,,,
61,3,,26450-120302,,"BOLT         M12X30",4,,,,,,,,,,,,,,,,,,
62,1,,172187-73340,,"FUEL PIPE",1,,,,,,,,,,,,,,,,,
63,1,,172455-76130,,DRAIN,1,,,,,,,,,,,,,,,,,
64,1,,172455-78120,,"HOSE G806AY032",1,,,,,,,,,,,,,,,,,
65,1,,22217-160000,,"SPRING WASHER 16",8,,,,,,,,,,,,,,,,,
66,1,,23000-016000,,"CLAMP 16",1,,,,,,,,,,,,,,,,,
67,1,,23871-030000,,"PLUG PT3/8,SCREW",1,,,,,,,,,,,,,,,,,
68,1,,23871-040000,,"PLUG PT1/2,SCREW",1,,,,,,,,,,,,,,,,,
69,1,,26013-100162,,"BOLT M10X 16",2,,,,,,,,,,,,,,,,,
70,1,,26116-160502,,"BOLT M16X 50 PLATED",8,,,,,,,,,,,,,,,,,,
```

https://truckmanualshub.com/

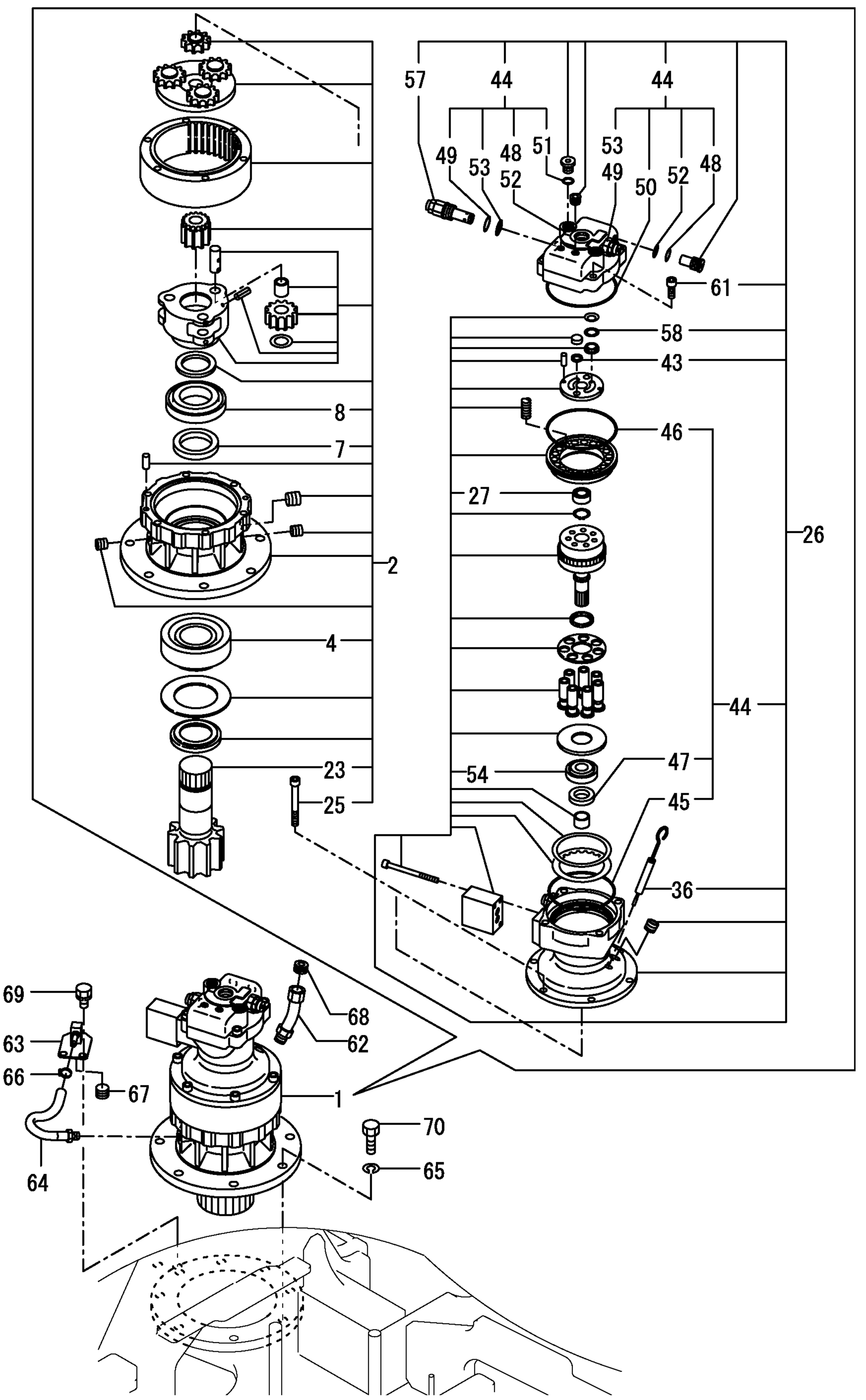

https://truckmanualshub.com/

```
1,1,,172149-64480,,"COLLAR 11X21",2,,,,,,,,72478133,,,,,,,,,,,,I
2,1,,172437-73600,,ACCUMULATOR,1,,,,,,,,,,,,,,,,,,,,
3,1,,172437-73610,,"BRACKET, ACCUMULATOR",1,,,,,,,,,,,,,,,,,,,,
4,1,,172437-73630,,"STOPPER,ACCUMULATOR",1,,,,,,,,,,,,,,,,,,,,
5,1,,172437-76120,,ELBOW,1,,,,,,,,,,,,,,,,,,,,
6,1,,172141-76180,,CONNECTOR,1,,,,,,,,,,,,,,,,,,,,
7,2,,24315-000110,,"O-RING 1B P-11.0",1,,,,,,,,,,,,,,,,,,,,
8,1,,172467-78250,,"HOSE F403BC074S",1,,,,,,,,,,,,,,,,,,,,
9,1,,172437-78760,,RUBBER,1,,,,,,,,72478133,,,,,,,,,,,,I
10,1,,26013-080252,,"BOLT M 8X 25",2,,,,,,,,,,,,,,,,,,,,
11,1,,26013-100252,,"BOLT W/WASHER M10X25",3,,,,,,,,,,,,,,,,,,,,
```

https://truckmanualshub.com/

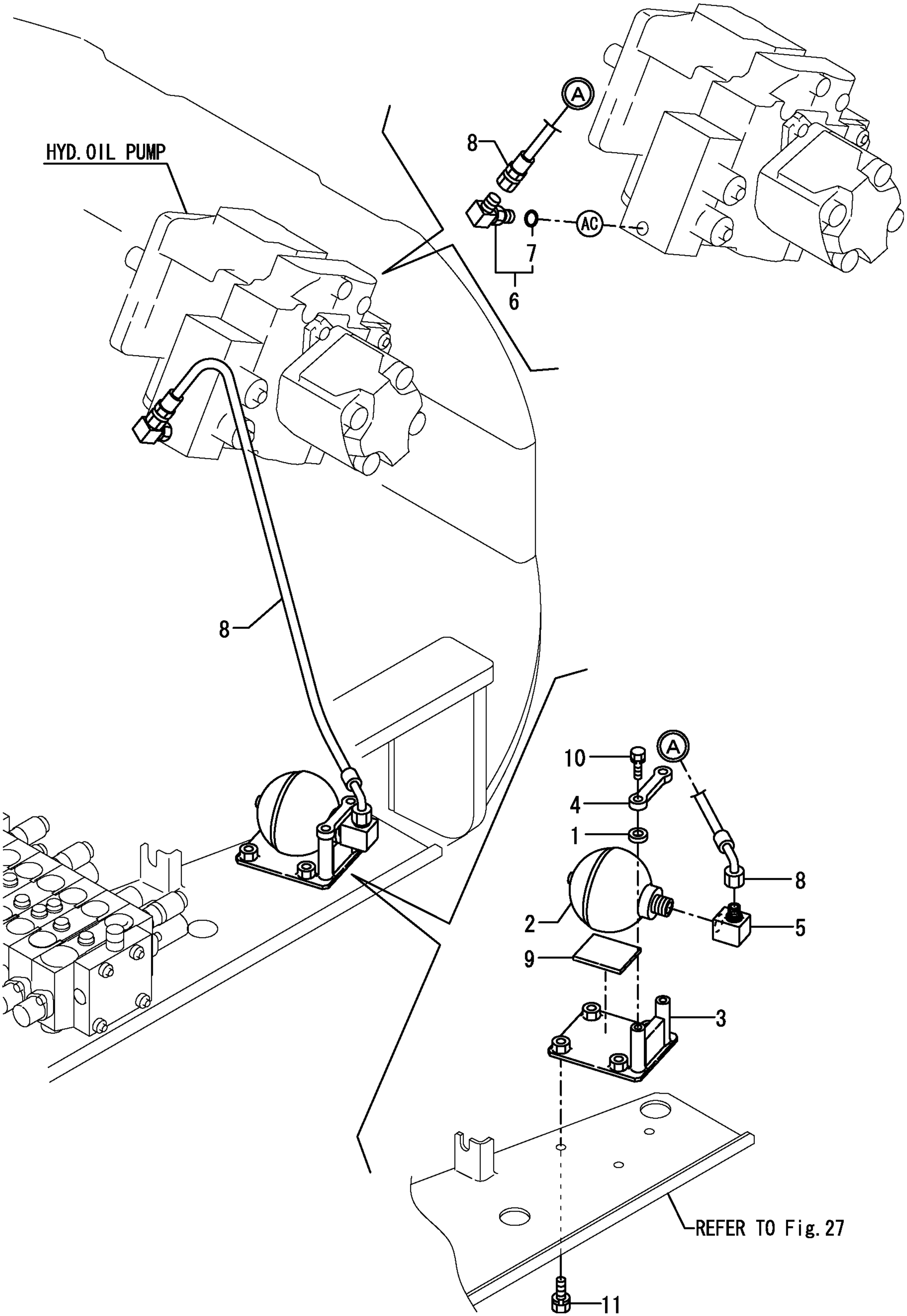

https://truckmanualshub.com/

```
1,1,,172187-73801,,"JOINT ASSY, SWIVEL",1,,,,,,,,,,,,,,,,,
2,2,,172147-73810,,SHAFT,1,,,,,,,,,,,,,,,,,
3,2,,26013-100402,,"BOLT M10X 40",4,,,,,,,,,,,,,,,,,
4,2,,172147-73830,,"HUB, SWIVEL",1,,,,,,,,,,,,,,,,,
5,2,,172147-73850,,PLATE,1,,,,,,,,,,,,,,,,,
6,2,,172122-73860,,"SPACER, SWIVEL",1,,,,,,,,,,,,,,,,,
7,2,,172122-73870,,"THRUST WASHER",1,,,,,,,,,,,,,,,,,
8,2,,22242-000700,,"CIRCLIP   70",1,,,,,,,,,,,,,,,,,
9,2,,23871-030000,,"PLUG PT3/8,SCREW",4,,,,,,,,,,,,,,,,,
10,2,,172187-73820,,"SEAL KIT, SWIVEL",1,,,,,,,,,,,,,,,,,
11,2,,172423-73820,,"SEAL, SWIVEL",8,,,,,,,,,,,,,,,,,
12,2,,24311-000800,,"O-RING 1A P-80.0",1,,,,,,,,,,,,,,,,,
13,2,,24311-001000,,"O-RING 1A P-100.0",1,,,,,,,,,,,,,,,,,
14,2,,24321-000950,,"O-RING 1A G-95.0",1,,,,,,,,,,,,,,,,,
15,1,,22217-120000,,"SPRING WASHER",4,,,,,,,,,,,,,,,,,
16,1,,26116-120902,,"BOLT M12X 90 PLATED",4,,,,,,,,,,,,,,,,,
```

https://truckmanualshub.com/

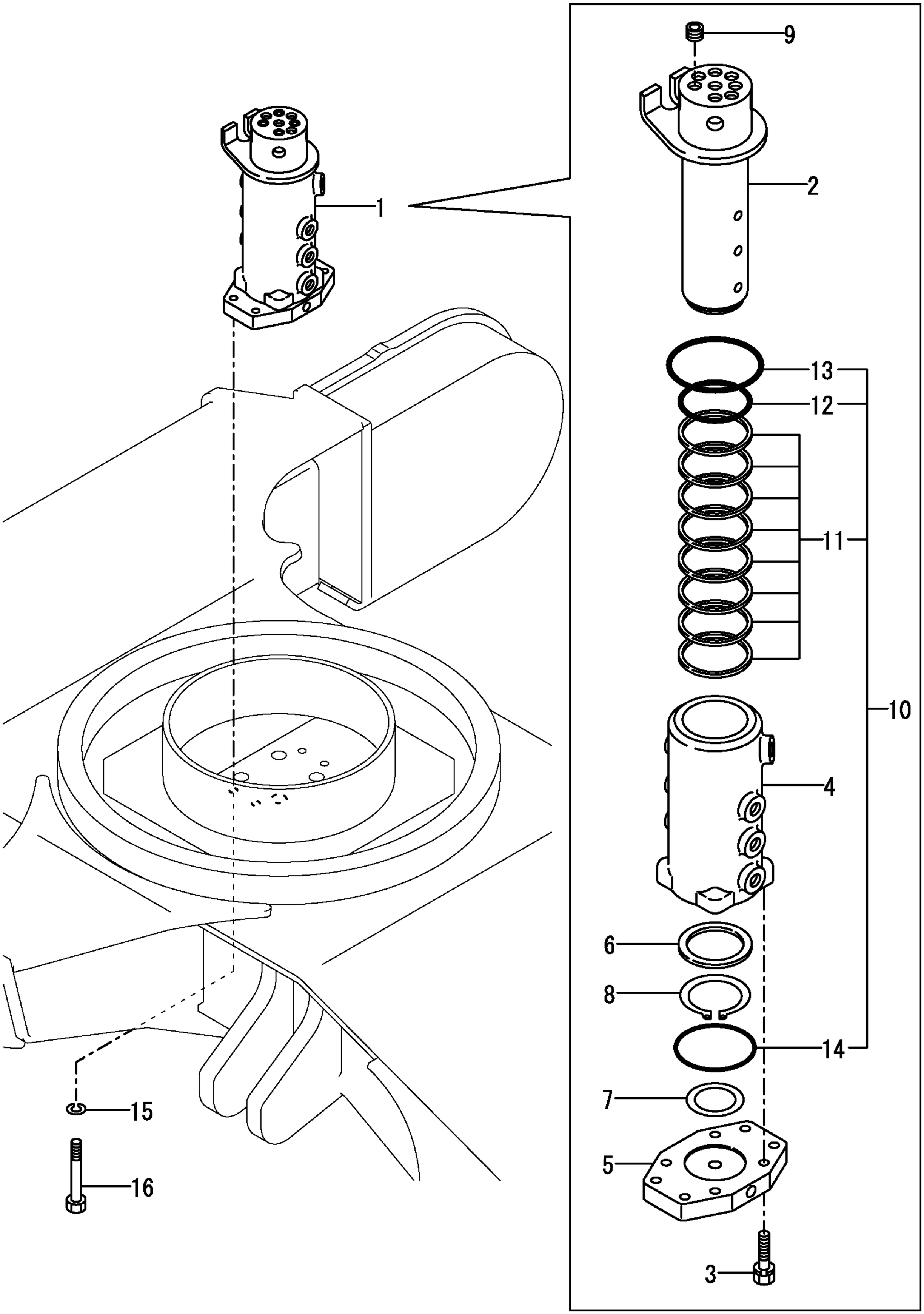

```
1,1,,172478-74110,,"VALVE,CONTROL",1,,,,,,,,,,,,,,,,,
2,2,,172422-74110,,NUT,8,,,,,,,,,,,,,,,,,
3,2,,172478-74150,,"TIE ROD",4,,,,,,,,,,,,,,,,,
4,2,,172478-74600,,"SECTION ASSY,BUCKET",1,,,,,,,,,,,,,,,,,
5,3,,172455-74250,,"ANTI-VOIDE VALVE",1,,,,,,,,,,,,,,,,,
7,4,,172116-74150,,O-RING,1,,,,,,,,,,,,,,,,,
15,3,,172478-74400,,"VALVE,RELIEF 280/40",1,,,,,,,,,,,,,,,,,
16,4,,172116-74150,,O-RING,1,,,,,,,,,,,,,,,,,
36,3,,172478-74480,,"SECTION BUCKET",1,,,,,,,,,,,,,,,,,
40,4,,172151-74320,,O-RING,2,,,,,,,,,,,,,,,,,
45,4,,172455-74450,,PLUG,2,,,,,,,,,,,,,,,,,
46,4,,172455-74460,,PACKING,2,,,,,,,,,,,,,,,,,
48,4,,24321-000700,,"O-RING 1A G70.0,NBR",1,,,,,,,,,,,,,,,,,
49,2,,172478-74630,,"SECTION ASSY,4TH",1,,,,,,,,,,,,,,,,,
50,3,,172455-74320,,"SHUTOFF VALVE",2,,,,,,,,,,,,,,,,,
55,4,,172116-74150,,O-RING,2,,,,,,,,,,,,,,,,,
57,3,,172478-74440,,PLUG,2,,,,,,,,,,,,,,,,,
58,4,,24315-000110,,"O-RING 1B P-11.0",2,,,,,,,,,,,,,,,,,
59,3,,172478-74460,,"SECTION 4TH",1,,,,,,,,,,,,,,,,,
63,4,,172151-74320,,O-RING,2,,,,,,,,,,,,,,,,,
68,4,,172455-74450,,PLUG,2,,,,,,,,,,,,,,,,,
69,4,,172455-74460,,PACKING,2,,,,,,,,,,,,,,,,,
71,3,,172187-74550,,PLUG,2,,,,,,,,,,,,,,,,,
72,4,,24315-000180,,"O-RING 1B P-18.0",2,,,,,,,,,,,,,,,,,
73,1,,26013-100162,,"BOLT M10X 16",3,,,,,,,,,,,,,,,,,
```

https://truckmanualshub.com/

CONTROL VALVE ASSY
172478-74110
Fig. 55 REF. NO. 1
INC Fig. 55 REF. NO. 2～72
Fig. 56 REF. NO. 1～112
Fig. 57 REF. NO. 1～105
Fig. 58 REF. NO. 1～89

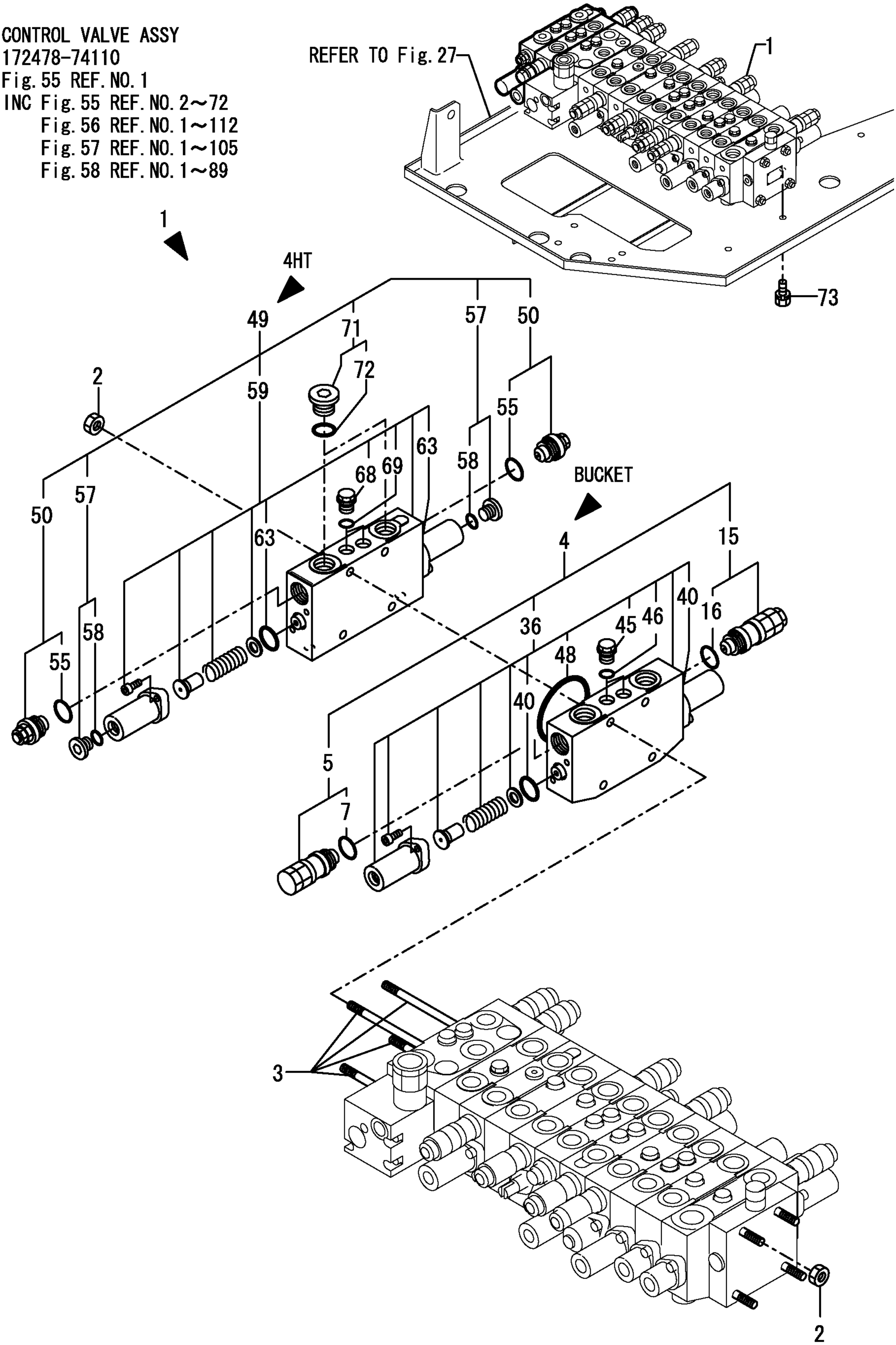

https://truckmanualshub.com/

```
1,2,,172478-74220,,"SECTION ASSY,DRIVE R",1,,,,,,,,,,,,,,,,,,
8,3,,172455-74450,,PLUG,1,,,,,,,,,,,,,,,,,
9,3,,172455-74460,,PACKING,1,,,,,,,,,,,,,,,,,,
12,3,,24321-000700,,"O-RING 1A G70.0,NBR",1,,,,,,,,,,,,,,,,,,
13,3,,933166-80520,,WIPER,2,,,,,,,,,,,,,,,,,
15,3,,933171-80610,,O-RING,2,,,,,,,,,,,,,,,,,,
16,2,,172478-74440,,PLUG,1,,,,,,,,,,,,,,,,,
17,3,,24315-000110,,"O-RING 1B P-11.0",1,,,,,,,,,,,,,,,,,
18,2,,172478-74510,,"SECTION ASSY,BOOM",1,,,,,,,,,,,,,,,,,,
19,3,,172478-74190,,"SECTION BOOM 1",1,,,,,,,,,,,,,,,,,
22,4,,172478-74200,,"VALVE , ANTI-DRIFT",2,,,,,,,,,,,,,,,,,
23,4,,172638-73650,,RING,1,,,,,,,,,,,,,,,,,
24,4,,172116-74150,,O-RING,1,,,,,,,,,,,,,,,,,
33,4,,172455-74660,,PACKING,1,,,,,,,,,,,,,,,,,
34,4,,172455-74670,,PACKING,1,,,,,,,,,,,,,,,,,
35,4,,172455-74680,,"BACK UP RING",1,,,,,,,,,,,,,,,,,
37,4,,172455-74690,,PACKING,2,,,,,,,,,,,,,,,,,
40,4,,172151-74320,,O-RING,2,,,,,,,,,,,,,,,,,
45,4,,172455-74450,,PLUG,2,,,,,,,,,,,,,,,,,
46,4,,172455-74460,,PACKING,2,,,,,,,,,,,,,,,,,
52,4,,172455-74570,,O-RING,1,,,,,,,,,,,,,,,,,
53,4,,172455-74580,,"RING,BACK-UP",1,,,,,,,,,,,,,,,,,
55,4,,24321-000700,,"O-RING 1A G70.0,NBR",1,,,,,,,,,,,,,,,,,
56,3,,172478-74400,,"VALVE,RELIEF 280/40",1,,,,,,,,,,,,,,,,,
57,4,,172116-74150,,O-RING,1,,,,,,,,,,,,,,,,,
77,3,,172478-74420,,"VALVE,RELIEF 300/40",1,,,,,,,,,,,,,,,,,
78,4,,172116-74150,,O-RING,1,,,,,,,,,,,,,,,,,
98,2,,172478-74520,,"SECTION ASSY,INLET",1,,,,,,,,,,,,,,,,,
99,3,,172187-74160,,"VALVE, RELIEF",2,,,,,,,,,,,,,,,,,
100,4,,172116-74150,,O-RING,4,,,,,,,,,,,,,,,,,
101,3,,172478-74230,,"SECTION INLET",1,,,,,,,,,,,,,,,,,
105,4,,172478-74240,,"CAP ASSY",1,,,,,,,,,,,,,,,,,
106,4,,172151-74320,,O-RING,2,,,,,,,,,,,,,,,,,
112,4,,24321-000700,,"O-RING 1A G70.0,NBR",2,,,,,,,,,,,,,,,,,
```

https://truckmanualshub.com/

CONTROL VALVE ASSY
172478-74110
Fig. 55 REF. NO. 1
INC Fig. 55 REF. NO. 2～72
Fig. 56 REF. NO. 1～112
Fig. 57 REF. NO. 1～105
Fig. 58 REF. NO. 1～89

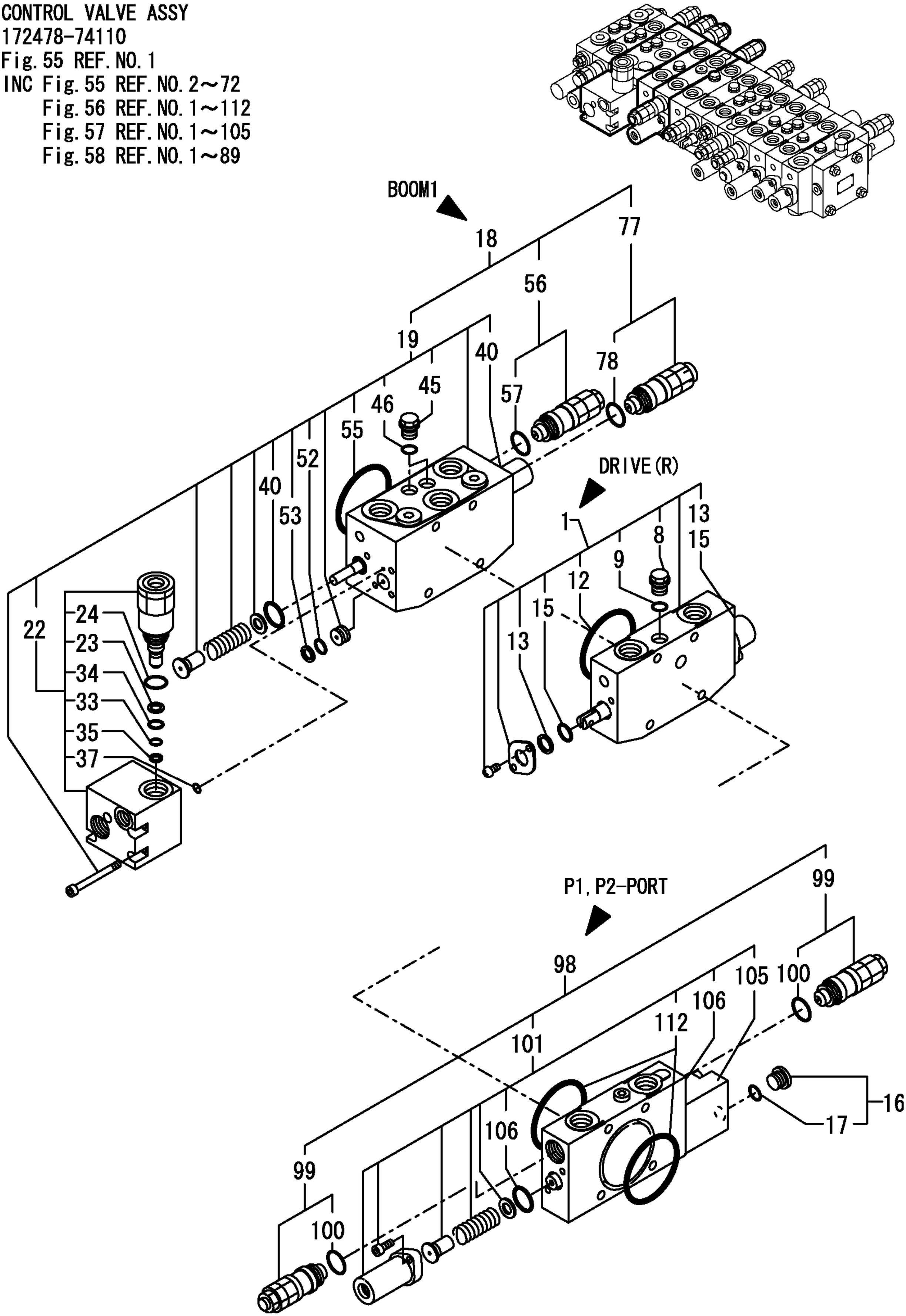

https://truckmanualshub.com/

```
1,2,,172478-74260,,"SECTION ASSY,DRIVE L",1,,,,,,,,,,,,,,,,,,
6,3,,172455-74450,,PLUG,1,,,,,,,,,,,,,,,,,
7,3,,172455-74460,,PACKING,1,,,,,,,,,,,,,,,,,,
10,3,,24321-000700,,"O-RING 1A G70.0,NBR",1,,,,,,,,,,,,,,,,,,
11,3,,933166-80520,,WIPER,2,,,,,,,,,,,,,,,,,
13,3,,933171-80610,,O-RING,2,,,,,,,,,,,,,,,,,,
14,2,,172478-74530,,"SECTION ASSY,SWING",1,,,,,,,,,,,,,,,,,
15,3,,172478-74270,,"SECTION SWING",1,,,,,,,,,,,,,,,,,,
22,4,,172455-74450,,PLUG,1,,,,,,,,,,,,,,,,,
23,4,,172455-74460,,PACKING,1,,,,,,,,,,,,,,,,,,
26,4,,24321-000700,,"O-RING 1A G70.0,NBR",1,,,,,,,,,,,,,,,,,,
27,4,,933166-80520,,WIPER,2,,,,,,,,,,,,,,,,,
29,4,,933171-80610,,O-RING,2,,,,,,,,,,,,,,,,,,
30,3,,172478-74400,,"VALVE,RELIEF 280/40",2,,,,,,,,,,,,,,,,,,
31,4,,172116-74150,,O-RING,2,,,,,,,,,,,,,,,,,
51,2,,172478-74610,,"SECTION P.T.O. ASSY",1,,,,,,,,,,,,,,,,,,
52,3,,172455-74320,,"SHUTOFF VALVE",2,,,,,,,,,,,,,,,,,,
57,4,,172116-74150,,O-RING,2,,,,,,,,,,,,,,,,,
59,3,,172478-74450,,"SECTION P.T.O.",1,,,,,,,,,,,,,,,,,,
66,4,,172455-74450,,PLUG,2,,,,,,,,,,,,,,,,,
67,4,,172455-74460,,PACKING,2,,,,,,,,,,,,,,,,,,
70,4,,24321-000700,,"O-RING 1A G70.0,NBR",1,,,,,,,,,,,,,,,,,,
71,4,,933166-80520,,WIPER,2,,,,,,,,,,,,,,,,,
73,4,,933171-80610,,O-RING,2,,,,,,,,,,,,,,,,,,
74,2,,172478-74620,,"SECTION ARM ASSY",1,,,,,,,,,,,,,,,,,
75,3,,172478-74400,,"VALVE,RELIEF 280/40",2,,,,,,,,,,,,,,,,,,
76,4,,172116-74150,,O-RING,2,,,,,,,,,,,,,,,,,
96,3,,172478-74490,,"SECTION ARM",1,,,,,,,,,,,,,,,,,,
99,4,,172151-74320,,O-RING,2,,,,,,,,,,,,,,,,,
104,4,,172455-74450,,PLUG,2,,,,,,,,,,,,,,,,,
105,4,,172455-74460,,PACKING,2,,,,,,,,,,,,,,,,,,,
```

https://truckmanualshub.com/

CONTROL VALVE ASSY
172478-74110
Fig. 55 REF. NO. 1
INC Fig. 55 REF. NO. 2～72
Fig. 56 REF. NO. 1～112
Fig. 57 REF. NO. 1～105
Fig. 58 REF. NO. 1～89

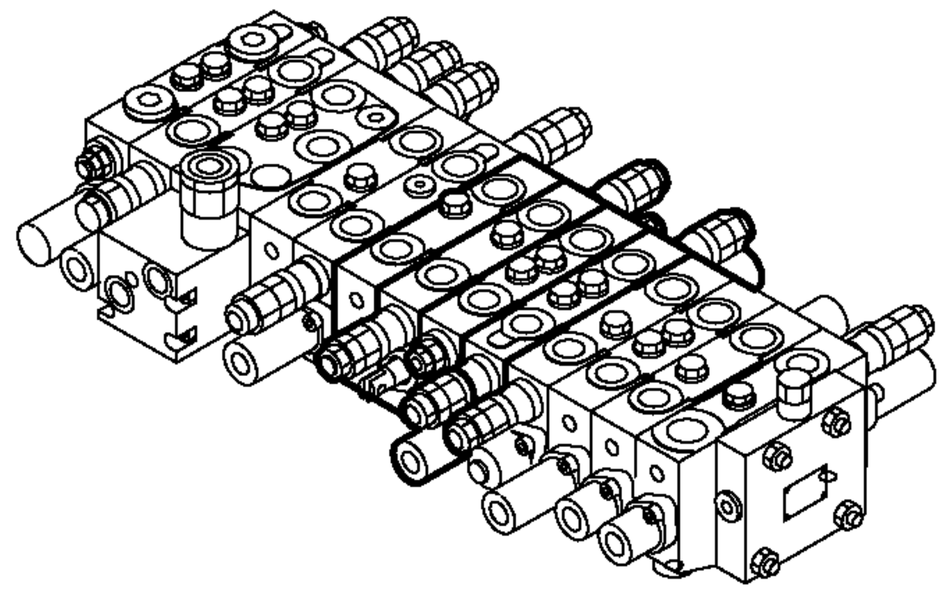

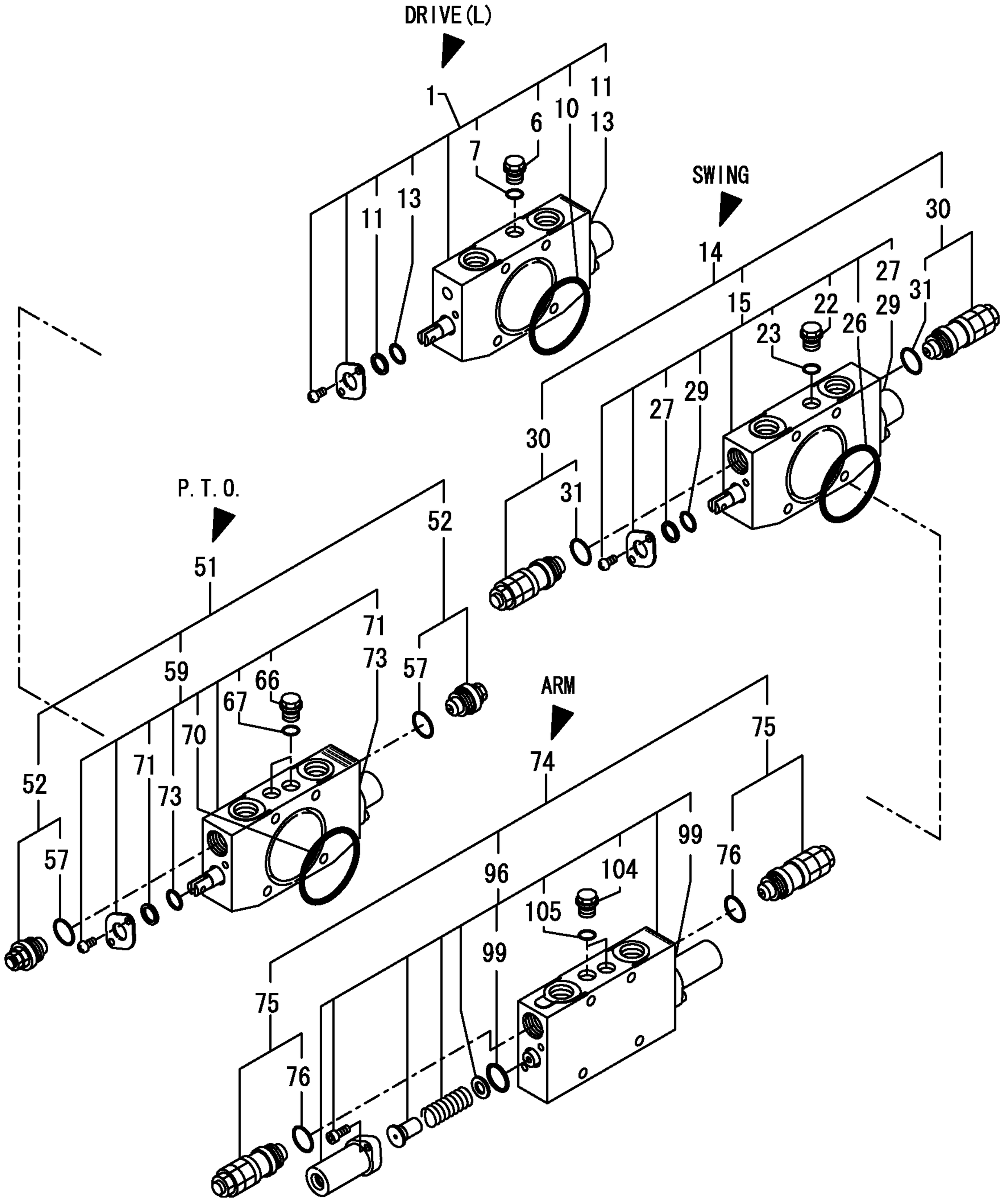

https://truckmanualshub.com/

```
1,2,,172478-74310,,"SECTION TURNING",1,,,,,,,,,,,,,,,,,
4,3,,172175-74220,,"SEAT, SPRING",2,,,,,,,,,,,,,,,,,
5,3,,172151-74320,,O-RING,2,,,,,,,,,,,,,,,,,
11,3,,172455-74450,,PLUG,2,,,,,,,,,,,,,,,,,
12,3,,172455-74460,,PACKING,2,,,,,,,,,,,,,,,,,
13,3,,24321-000700,,"O-RING 1A G70.0,NBR",1,,,,,,,,,,,,,,,,,
14,2,,172478-74330,,"SECTION BOOM 2",1,,,,,,,,,,,,,,,,,
19,3,,172151-74320,,O-RING,2,,,,,,,,,,,,,,,,,
23,3,,172455-74450,,PLUG,1,,,,,,,,,,,,,,,,,
24,3,,172455-74460,,PACKING,1,,,,,,,,,,,,,,,,,
26,3,,172187-74540,,PLUG,2,,,,,,,,,,,,,,,,,
27,4,,24315-000140,,"O-RING 1B P-14.0",2,,,,,,,,,,,,,,,,,
28,3,,24321-000700,,"O-RING 1A G70.0,NBR",1,,,,,,,,,,,,,,,,,
29,2,,172478-74350,,"BODY ASSY",1,,,,,,,,,,,,,,,,,
30,3,,172478-74360,,BODY,1,,,,,,,,,,,,,,,,,
31,3,,172478-74370,,"PLUG ASSY",1,,,,,,,,,,,,,,,,,
32,2,,172455-74380,,PLUG,1,,,,,,,,,,,,,,,,,
33,3,,24315-000180,,"O-RING 1B P-18.0",1,,,,,,,,,,,,,,,,,
34,2,,172478-74440,,PLUG,1,,,,,,,,,,,,,,,,,
35,3,,24315-000110,,"O-RING 1B P-11.0",1,,,,,,,,,,,,,,,,,
36,2,,172478-74560,,"SECTION ASSY,BLADE",1,,,,,,,,,,,,,,,,,
37,3,,172478-74300,,"SECTION BLADE",1,,,,,,,,,,,,,,,,,
46,4,,172455-74450,,PLUG,1,,,,,,,,,,,,,,,,,
47,4,,172455-74460,,PACKING,1,,,,,,,,,,,,,,,,,
50,4,,24321-000700,,"O-RING 1A G70.0,NBR",1,,,,,,,,,,,,,,,,,
51,4,,933166-80520,,WIPER,2,,,,,,,,,,,,,,,,,
53,4,,933171-80610,,O-RING,2,,,,,,,,,,,,,,,,,
54,3,,172478-74430,,"VALVE,RELIEF 150/57",1,,,,,,,,,,,,,,,,,
55,4,,172116-74150,,O-RING,1,,,,,,,,,,,,,,,,,
75,2,,172478-74570,,"SECTION ASSY,CONTROL",1,,,,,,,,,,,,,,,,,
76,3,,172478-74340,,"SECTION CONTROL",1,,,,,,,,,,,,,,,,,
81,4,,172455-74320,,"SHUTOFF VALVE",2,,,,,,,,,,,,,,,,,
82,4,,172455-74450,,PLUG,1,,,,,,,,,,,,,,,,,
83,4,,172455-74460,,PACKING,1,,,,,,,,,,,,,,,,,
87,4,,24321-000700,,"O-RING 1A G70.0,NBR",2,,,,,,,,,,,,,,,,,
88,3,,172478-74380,,"VALVE,RELIEF 210/57",1,,,,,,,,,,,,,,,,,
89,4,,172116-74150,,O-RING,1,,,,,,,,,,,,,,,,,
```

https://truckmanualshub.com/

CONTROL VALVE ASSY
172478-74110
Fig. 55 REF. NO. 1
INC Fig. 55 REF. NO. 2～72
Fig. 56 REF. NO. 1～112
Fig. 57 REF. NO. 1～105
Fig. 58 REF. NO. 1～89

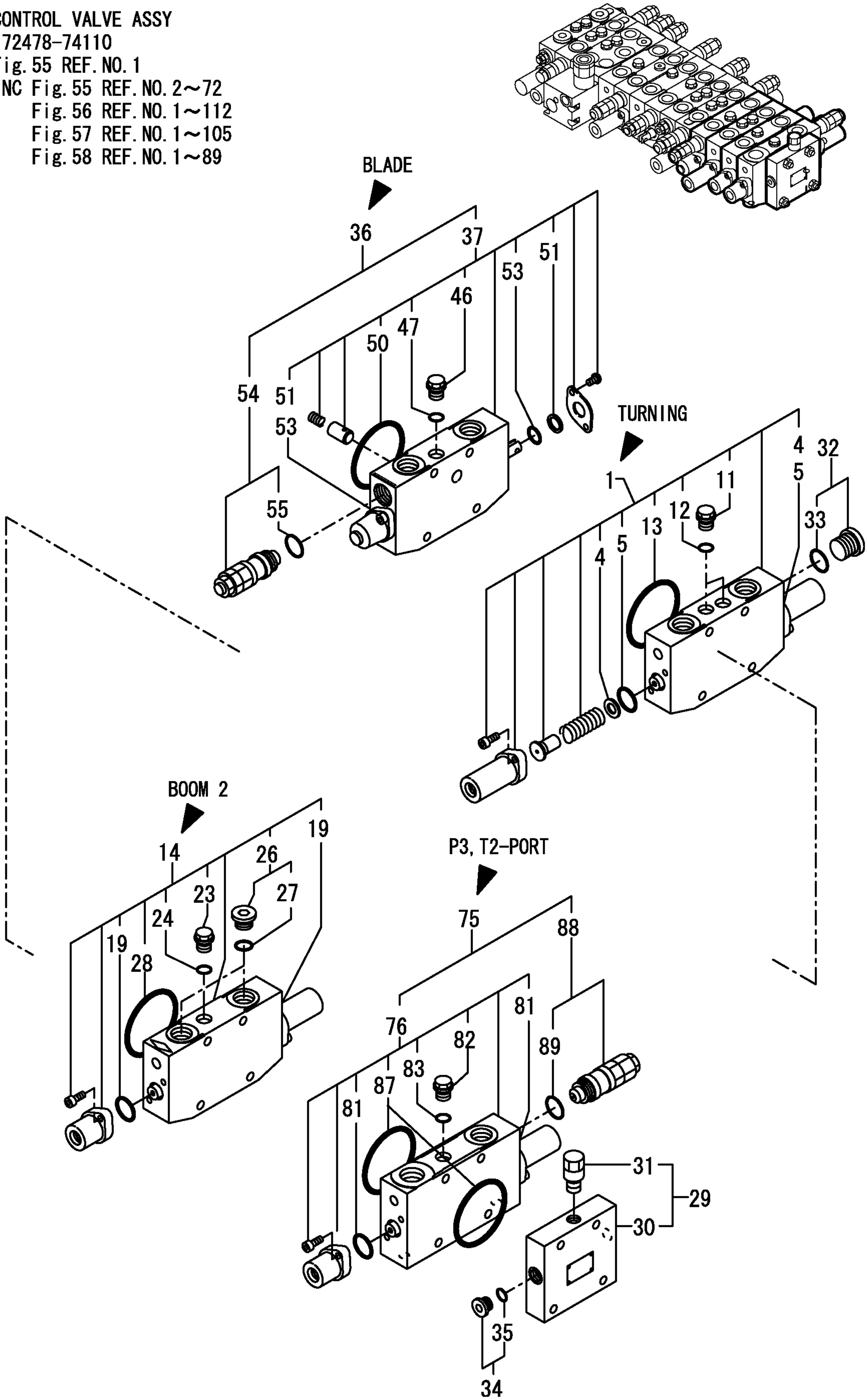

https://truckmanualshub.com/

```
1,1,,172463-74511,,"VALVE ASSY, R.US",1,,,,,,,,,,,,,,,,,
2,2,,172441-74030,,BELLOWS,1,,,,,,,,,,,,,,,,,
3,2,,172441-74040,,"COMMAND KIT",1,,,,,,,,,,,,,,,,,
4,2,,172463-74530,,"CARDAN KIT",1,,,,,,,,,,,,,,,,,
5,2,,172463-74540,,"RETAINING PLATE",1,,,,,,,,,,,,,,,,,
6,2,,172463-74551,,"PLUNGER KIT",1,,,,,,,,,,,,,,,,,
7,2,,172463-74561,,"REGULATION KIT",1,,,,,,,,,,,,,,,,,
8,2,,172463-74570,,"SPRING KIT",1,,,,,,,,,,,,,,,,,
9,2,,172463-74580,,"PUSH BUTTON",1,,,,,,,,,,,,,,,,,
10,2,,172463-74590,,"HANDLE R",1,,,,,,,,,,,,,,,,,
11,1,,172463-74521,,"VALVE ASSY, L.US",1,,,,,,,,,,,,,,,,,
12,2,,172441-74030,,BELLOWS,1,,,,,,,,,,,,,,,,,
13,2,,172441-74040,,"COMMAND KIT",1,,,,,,,,,,,,,,,,,
14,2,,172441-74050,,"HANDLE L",1,,,,,,,,,,,,,,,,,
15,2,,172463-74530,,"CARDAN KIT",1,,,,,,,,,,,,,,,,,
16,2,,172463-74540,,"RETAINING PLATE",1,,,,,,,,,,,,,,,,,
17,2,,172463-74551,,"PLUNGER KIT",1,,,,,,,,,,,,,,,,,
18,2,,172463-74561,,"REGULATION KIT",1,,,,,,,,,,,,,,,,,
19,2,,172463-74570,,"SPRING KIT",1,,,,,,,,,,,,,,,,,
20,1,,22137-060000,,"WASHER 6, POLISHED",8,,,,,,,,,,,,,,,,,
21,1,,26013-060202,,"BOLT M 6X 20",8,,,,,,,,,,,,,,,,,
22,1,,172463-74511,,"VALVE ASSY, R.US",1,,,,,,,1,,,,,,,,,,,,I
23,2,,172441-74030,,BELLOWS,1,,,,,,,,,,,,,,,,,,,,I
24,2,,172441-74040,,"COMMAND KIT",1,,,,,,,,,,,,,,,,,,,,I
25,2,,172463-74530,,"CARDAN KIT",1,,,,,,,,,,,,,,,,,,,,I
26,2,,172463-74540,,"RETAINING PLATE",1,,,,,,,,,,,,,,,,,,,,,I
27,2,,172463-74551,,"PLUNGER KIT",1,,,,,,,,,,,,,,,,,,,,I
28,2,,172463-74561,,"REGULATION KIT",1,,,,,,,,,,,,,,,,,,,,,I
29,2,,172463-74570,,"SPRING KIT",1,,,,,,,,,,,,,,,,,,,,I
30,2,,172463-74580,,"PUSH BUTTON",1,,,,,,,,,,,,,,,,,,,,I
31,2,,172463-74590,,"HANDLE R",1,,,,,,,,,,,,,,,,,,,,I
```

https://truckmanualshub.com/

P/C NEWS No:Y00S4030-1
PUBLISHED:2003/04

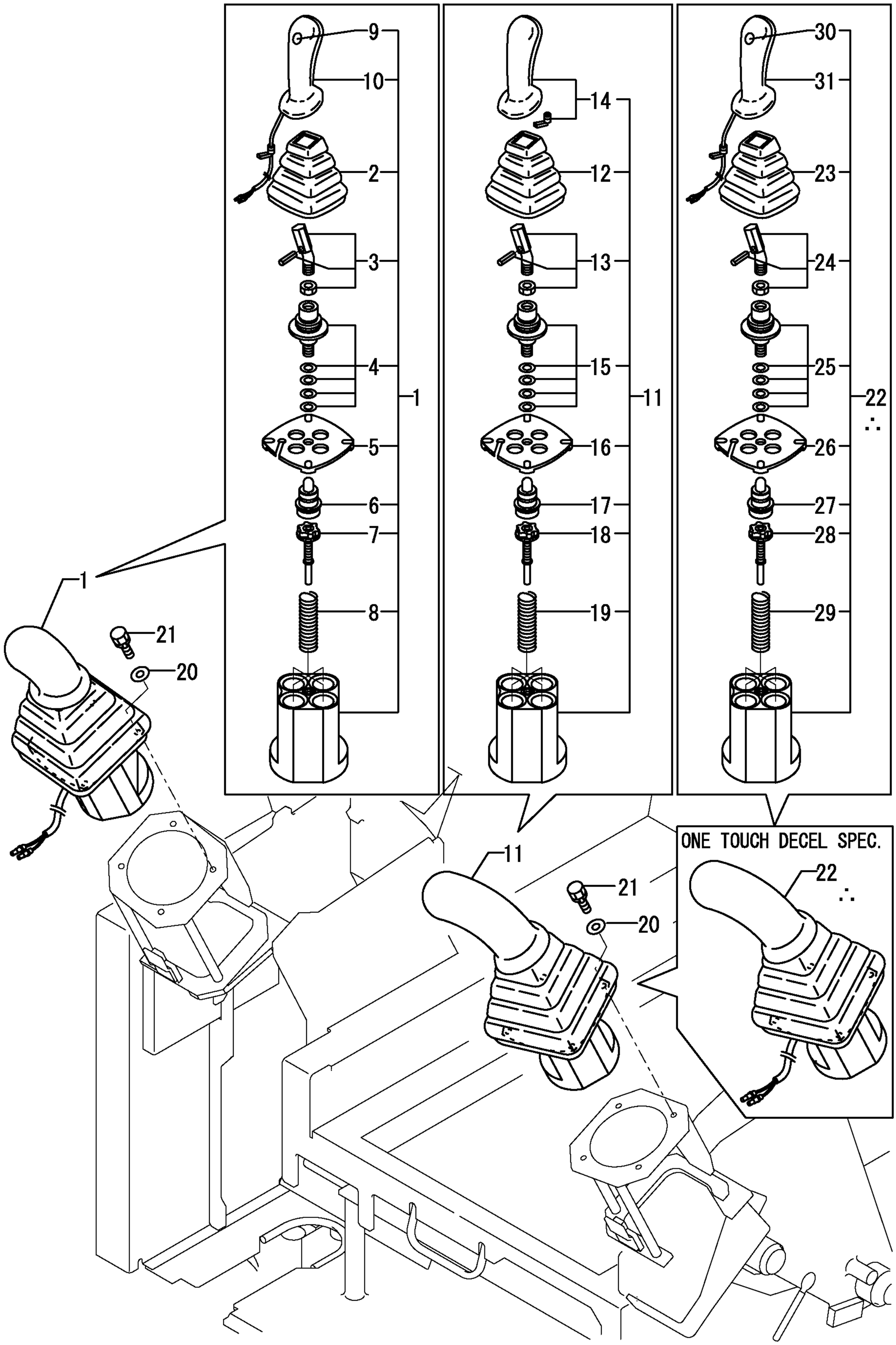

∴MARKED PART HAS BEEN CHANGED(ADDED).

https://truckmanualshub.com/

```
1,1,,172187-74800,,"OIL COOLER",1,,,,,,,,,,,,,,,,,,
2,1,,26013-080162,,"BOLT W/WASHER M8X16",4,,,,,,,,,,,,,,,,,,
```

https://truckmanualshub.com/

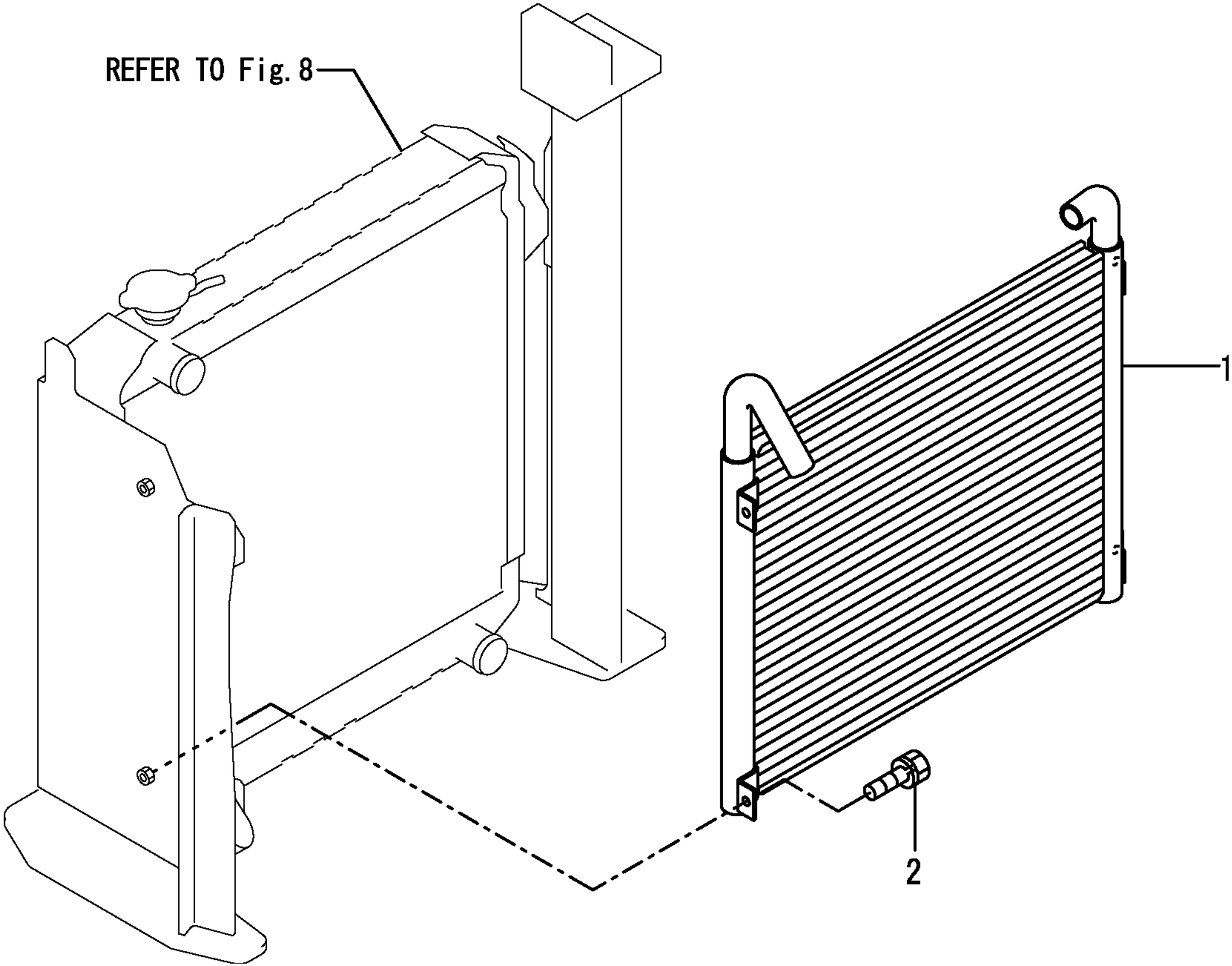

https://truckmanualshub.com/

```
1,1,,772455-75100,,"RESERVOIR ASSY",1,,,,,,,,,,,,,,,,,
2,2,,172162-73700,,"STRAINER,SUCTION",1,,,,,,,,,,,,,,,,,
3,2,,172187-73700,,"FILTER ASSY, RETURN",1,,,,,,,,,,,,,,,,,,
4,3,,172187-73730,,ELEMENT,1,,,,,,,,,,,,,,,,,
5,3,,172112-74971,,"VALVE, BY-PASS",1,,,,,,,,,,,,,,,,,
6,2,,172141-73710,,"ROD, STRAINER",1,,,,,,,,,,,,,,,,,
7,2,,172112-75770,,"SPRING, STRAINER",1,,,,,,,,,,,,,,,,,
8,2,,172112-75780,,"SPRING, STRAINER",1,,,,,,,,,,,,,,,,,
9,2,,26716-100002,,"NUT 10",1,,,,,,,,,,,,,,,,,
10,2,,124766-59050,,"CLAMP 12",1,,,,,,,,,,,,,,,,,
12,2,,172455-75240,,COVER,1,,,,,,,,,,,,,,,,,
13,2,,172455-75270,,"GAUGE ASSY, OIL",1,,,,,,,,,,,,,,,,,
15,3,,172455-75290,,"BOLT M10",2,,,,,,,,,,,,,,,,,
18,2,,172455-75320,,HOSE,1,,,,,,,,,,,,,,,,,
19,2,,172455-75330,,"DRAIN PLIG 24",1,,,,,,,,,,,,,,,,,
20,2,,172187-75340-1,,"COVER A, HYD.OIL",1,,,,,,,,,,,,,,,,,,
21,2,,172165-75450-2,,PLATE,1,,,,,,,,,,,,,,,,,
22,2,,172165-75460,,GASKET,1,,,,,,,,,,,,,,,,,
23,2,,172165-75481,,ELEMENT,1,,,,,,,,,,,,,,,,,
24,2,,172116-75850-3,,"PLUG,OIL FEED",1,,,,,,,,,,,,,,,,,
25,2,,24311-000380,,"O-RING 1A P-38.0",1,,,,,,,,,,,,,,,,,
26,2,,24321-001350,,"O-RING 1A G-135.0",1,,,,,,,,,,,,,,,,,
27,2,,24321-001700,,"O-RING 1A G-170.0",1,,,,,,,,,,,,,,,,,
28,2,,24341-000300,,"O-RING 1A S-30.0",1,,,,,,,,,,,,,,,,,
29,2,,26013-100202,,"BOLT W/WASHER M10X20",4,,,,,,,,,,,,,,,,,
30,2,,26013-100202,,"BOLT W/WASHER M10X20",4,,,,,,,,,,,,,,,,,
31,2,,26022-050102,,"SCREW M 5X 10",3,,,,,,,,,,,,,,,,,
32,1,,22137-160000,,"WASHER 16,POLISHED",4,,,,,,,,,,,,,,,,,
33,1,,22217-160000,,"SPRING WASHER 16",4,,,,,,,,,,,,,,,,,
34,1,,26116-160402,,"BOLT M16X 40 PLATED",4,,,,,,,,,,,,,,,,,
```

https://truckmanualshub.com/

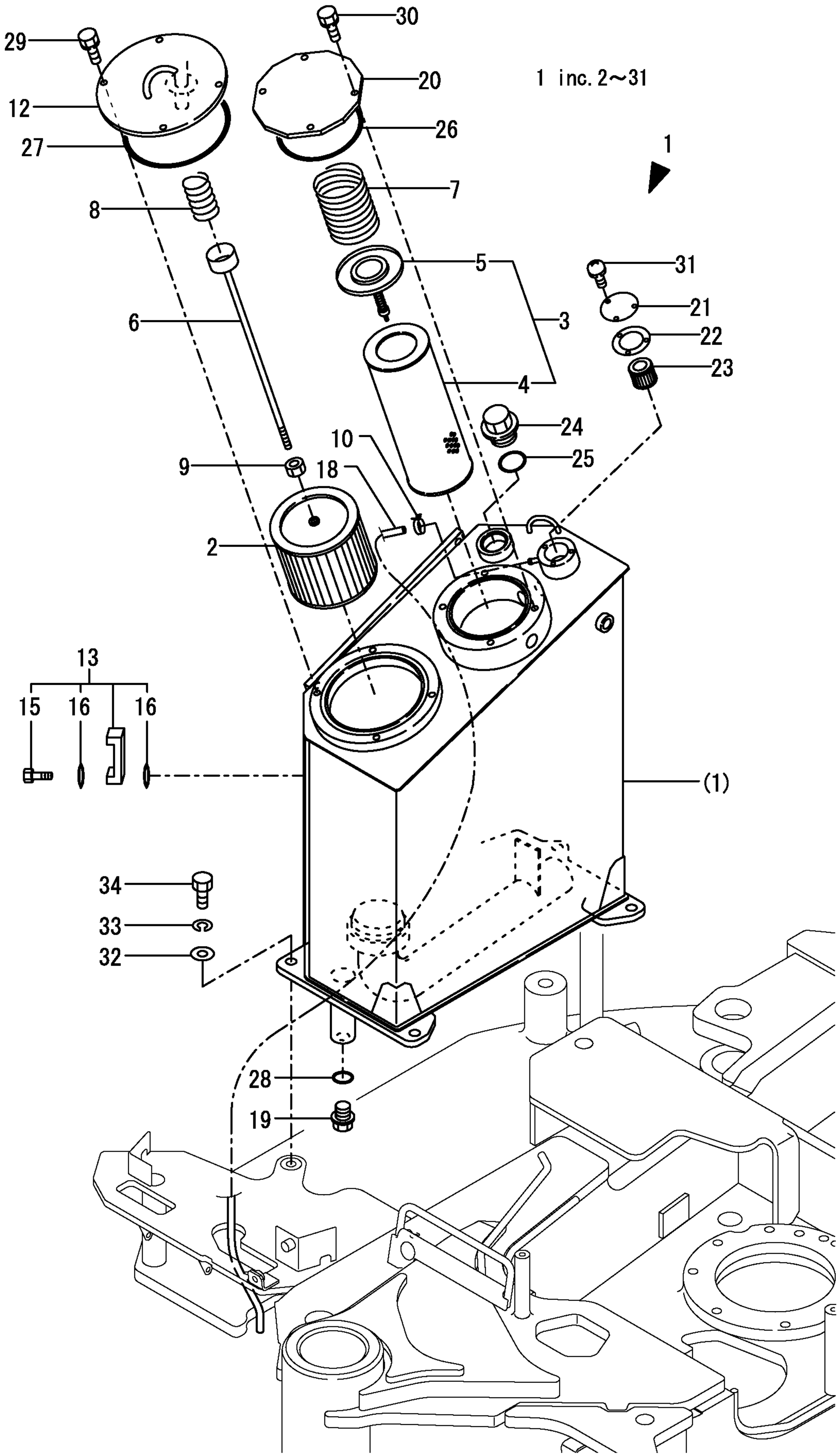

https://truckmanualshub.com/

```
1,1,,172455-76100,,FLANGE,1,,,,,,,,,,,,,,,,,,
2,1,,172151-76160,,ELBOW,2,,,,,,,,,,,,,,,,,,
4,2,,24315-000180,,"O-RING 1B P-18.0",2,,,,,,,,,,,,,,,,,,
5,1,,172187-76190,,ELBOW,2,,,,,,,,,,,,,,,,,,
6,2,,24315-000240,,"O-RING 1B P-24.0",2,,,,,,,,,,,,,,,,,,
7,1,,172455-76190,,ELBOW,1,,,,,,,,,,,,,,,,,,
8,2,,24315-000240,,"O-RING 1B P-24.0",1,,,,,,,,,,,,,,,,,,
9,1,,172455-76200,,"CONNECTOR 1/2-3/4",1,,,,,,,,,,,,,,,,,,
10,1,,24315-000180,,"O-RING 1B P-18.0",1,,,,,,,,,,,,,,,,,,
11,1,,24325-000650,,"O-RING 1B G-65.0",1,,,,,,,,,,,,,,,,,,
12,1,,26013-120402,,"BOLT M12X 40",4,,,,,,,,,,,,,,,,,,
13,1,,172455-76400,,"TUBE, SUC.",1,,,,,,,,,,,,,,,,,,
14,1,,26013-100402,,"BOLT M10X 40",2,,,,,,,,,,,,,,,,,,
15,1,,172455-78100,,"HOSE 59A",1,,,,,,,,,,,,,,,,,,
16,1,,172455-78110,,"HOSE 59B",1,,,,,,,,,,,,,,,,,,
17,1,,172455-78130,,"HOSE G110BC138",1,,,,,,,,,,,,,,,,,,
18,1,,172455-78140,,"HOSE G110BE113",1,,,,,,,,,,,,,,,,,,
19,1,,172455-78150,,"HOSE G110BC084",1,,,,,,,,,,,,,,,,,,
20,1,,23001-090000,,"HOSE CLAMP  90",8,,,,,,,,,,,,,,,,,,
```

https://truckmanualshub.com/

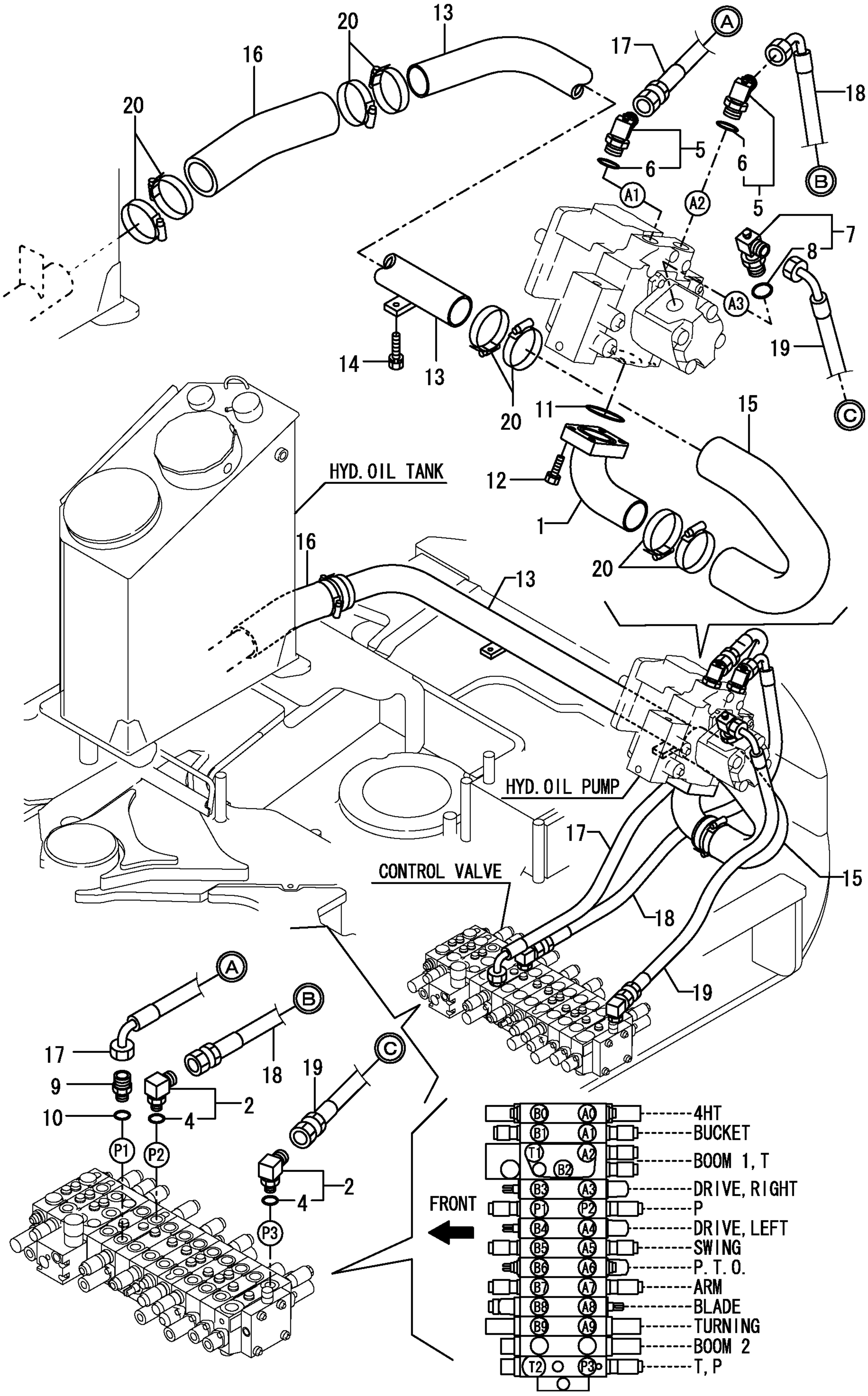

https://truckmanualshub.com/

```
1,1,,172147-76271,,CONNECTOR,1,,,,,,,,,,,,,,,,,
2,1,,172141-76900,,"CONNECTOR 1/2L",1,,,,,,,,,,,,,,,,,
3,2,,24315-000180,,"O-RING 1B P-18.0",1,,,,,,,,,,,,,,,,,,
4,1,,172112-77361,,CONNECTOR,2,,,,,,,,,,,,,,,,,
5,1,,172112-77361,,CONNECTOR,4,,,,,,,,,,,,,,,,,
6,1,,172112-77361,,CONNECTOR,1,,,,,,,,,,,,,,,,,
7,1,,172112-77361,,CONNECTOR,1,,,,,,,,,,,,,,,,,
8,1,,24315-000180,,"O-RING 1B P-18.0",2,,,,,,,,,,,,,,,,,,
9,1,,24315-000180,,"O-RING 1B P-18.0",4,,,,,,,,,,,,,,,,,,
10,1,,24315-000180,,"O-RING 1B P-18.0",1,,,,,,,,,,,,,,,,,,
11,1,,24315-000180,,"O-RING 1B P-18.0",1,,,,,,,,,,,,,,,,,,
12,1,,24315-000180,,"O-RING 1B P-18.0",1,,,,,,,,,,,,,,,,,,
13,1,,172478-76590-1,,"CLAMP,HOSE      (87)",1,,,,,,,,,,,,,,,,,,
14,2,,172187-76650,,"RUBBER, SUPPORT",1,,,,,,,,,,,,,,,,,
15,1,,172478-76640-1,,"PALTE    (YELLOW:87)",1,,,,,,,,,,,,,,,,,,
16,2,,172187-76700,,RUBBER,1,,,,,,,,,,,,,,,,,
17,1,,172187-78100,,"RUBBER A",2,,,,,,,,,,,,,,,,,
18,1,,172478-78200,,"HOSE H208BC209K",1,,,,,,,,,,,,,,,,,
19,1,,172478-78210,,"HOSE H208BC219K",1,,,,,,,,,,,,,,,,,
20,1,,172478-78220,,"HOSE H208BC220W",1,,,,,,,,,,,,,,,,,
21,1,,172478-78230,,"HOSE H208BC234W",1,,,,,,,,,,,,,,,,,
22,1,,172478-78240,,"HOSE H208BB260K",1,,,,,,,,,,,,,,,,,
23,1,,172478-78250,,"HOSE H208BC254K",1,,,,,,,,,,,,,,,,,
24,1,,172455-78310,,"HOSE H108CC150",1,,,,,,,,,,,,,,,,,
25,1,,172455-78320,,"HOSE H108CC166",1,,,,,,,,,,,,,,,,,
26,1,,172122-79930,,"CLAMP B",1,,,,,,,,,,,,,,,,,
27,1,,172183-81160,,"TREE CLIP",2,,,,,,,,,,,,,,,,,
28,1,,26013-100202,,"BOLT W/WASHER M10X20",2,,,,,,,,,,,,,,,,,
29,1,,26013-100602,,"BOLT M10X 60",2,,,,,,,,,,,,,,,,,
30,1,,172142-78780,,"COVER, HOSE",2,,,,,,,,,,,,,,,,,
31,1,,172122-79930,,"CLAMP B",4,,,,,,,,,,,,,,,,,
32,1,,172444-17660,,CLIP,2,,,,,,,,,,,,,,,,,
```

https://truckmanualshub.com/

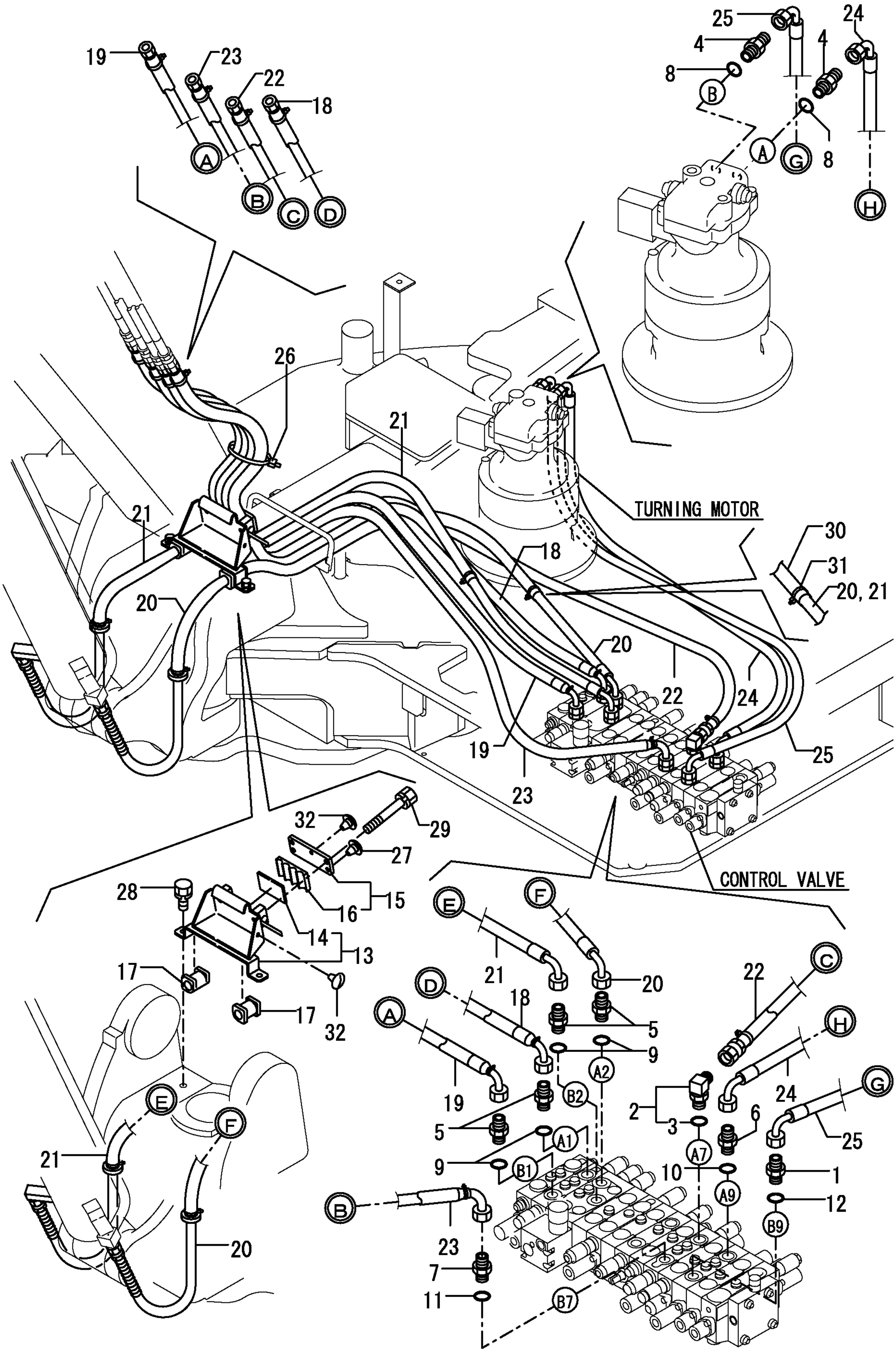

```
1,1,,172312-76020,,ELBOW,1,,,,,,,,,,,,,,,,,
2,1,,172141-76180,,CONNECTOR,1,,,,,,,,,,,,,,,,,
3,2,,24315-000110,,"O-RING 1B P-11.0",1,,,,,,,,,,,,,,,,,
4,1,,172147-76271,,CONNECTOR,1,,,,,,,,,,,,,,,,,
5,1,,172112-77361,,CONNECTOR,1,,,,,,,,,,,,,,,,,
6,1,,172112-77361,,CONNECTOR,2,,,,,,,,,,,,,,,,,
7,1,,172112-77361,,CONNECTOR,1,,,,,,,,,,,,,,,,,
8,1,,23393-040000,,"JOINT 90RGI 1/2",3,,,,,,,,,,,,,,,,,
9,1,,23394-020000,,"JOINT 45RGI1/4",1,,,,,,,,,,,,,,,,,
10,1,,23394-030000,,"JOINT 45RGI 3/8",1,,,,,,,,,,,,,,,,,
11,1,,23394-040000,,"JOINT 45RGI1/2",1,,,,,,,,,,,,,,,,,
12,1,,24315-000180,,"O-RING 1B P-18.0",1,,,,,,,,,,,,,,,,,
13,1,,24315-000180,,"O-RING 1B P-18.0",2,,,,,,,,,,,,,,,,,
14,1,,24315-000180,,"O-RING 1B P-18.0",1,,,,,,,,,,,,,,,,,
15,1,,24315-000180,,"O-RING 1B P-18.0",1,,,,,,,,,,,,,,,,,
16,1,,24315-000180,,"O-RING 1B P-18.0",3,,,,,,,,,,,,,,,,,
17,1,,933160-01370,,"CONNECTOR PF1/2-3/8",3,,,,,,,,,,,,,,,,,
18,1,,172455-78210,,"HOSE H108BC068",1,,,,,,,,,,,,,,,,,
19,1,,172455-78220,,"HOSE H108BC095",1,,,,,,,,,,,,,,,,,
20,1,,172455-78230,,"HOSE H108BC089",1,,,,,,,,,,,,,,,,,
21,1,,172455-78240,,"HOSE H108BC083",1,,,,,,,,,,,,,,,,,
22,1,,172478-78260,,"HOSE H206CC242S",1,,,,,,,,,,,,,,,,,
23,1,,172478-78270,,"HOSE H206CC225S",1,,,,,,,,,,,,,,,,,
24,1,,172455-78290,,"HOSE H208BC110",1,,,,,,,,,,,,,,,,,
25,1,,172455-78300,,"HOSE H106BC111",1,,,,,,,,,,,,,,,,,
26,1,,172478-78670,,"HOSE F403BC110S",1,,,,,,,,,,,,,,,,,
```

https://truckmanualshub.com/

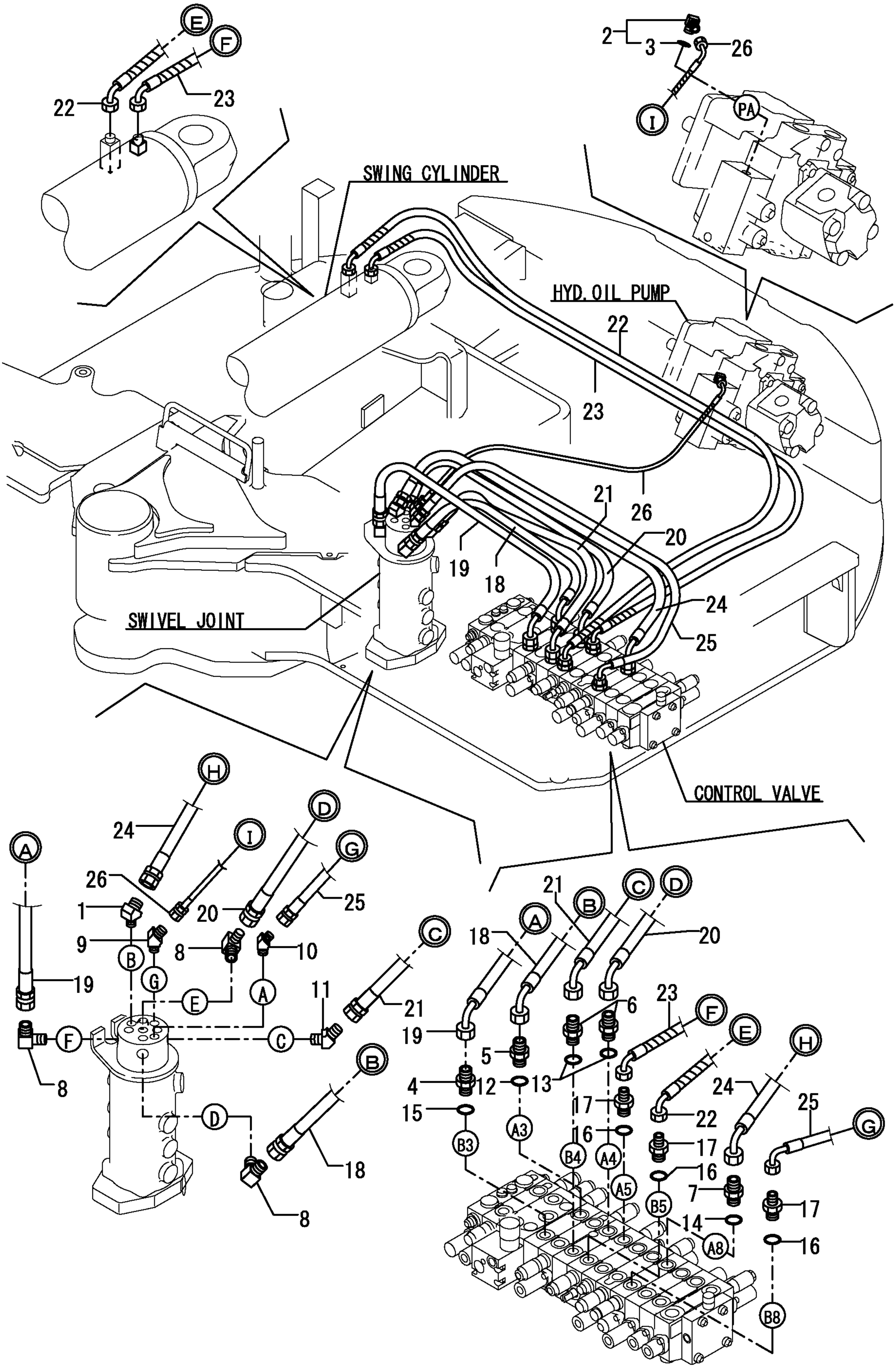

https://truckmanualshub.com/

```
1,1,,172137-76110,,NIPPLE,1,,,,,,,,,,,,,,,,,
2,1,,172123-76121,,"JOINT PF1/4",1,,,,,,,,,,,,,,,,,
3,1,,172187-76131,,CONNECTER(PF3/4-PT3/,1,,,,,,,,,,,,,,,,,
4,1,,172187-76141,,CONNECTOR(PF1-PF3/4,1,,,,,,,,,,,,,,,,,
5,2,,24315-000240,,"O-RING 1B P-24.0",1,,,,,,,,,,,,,,,,,
6,1,,172187-76160,,JOINT,1,,,,,,,,,,,,,,,,,
7,1,,172455-76160,,"ELBOW 90 3/4",1,,,,,,,,,,,,,,,,,
8,1,,172162-76180,,"JOINT 3-1/4 COMPL.",1,,,,,,,,,,,,,,,,,
10,2,,24315-000110,,"O-RING 1B P-11.0",1,,,,,,,,,,,,,,,,,
11,1,,172187-76180,,"NIPPLE, HOSE",1,,,,,,,,,,,,,,,,,
12,1,,172151-76200,,"JOINT PF3/4- 1",1,,,,,,,,,,,,,,,,,
13,1,,23001-041000,,"CLIP 41,HOSE",6,,,,,,,,,,,,,,,,,
14,1,,172455-76240,,"JOINT 3/8",1,,,,,,,,,,,,,,,,,
15,1,,172168-76370,,ELBOW,1,,,,,,,,,,,,,,,,,
16,1,,24315-000110,,"O-RING 1B P-11.0",1,,,,,,,,,,,,,,,,,
17,1,,23001-035000,,"HOSE CLAMP  35",2,,,,,,,,,,,,,,,,,
18,1,,24315-000240,,"O-RING 1B P-24.0",1,,,,,,,,,,,,,,,,,
19,1,,26013-100202,,"BOLT W/WASHER M10X20",2,,,,,,,,,,,,,,,,,,
20,1,,933111-50001,,CONNECTOR,1,,,,,,,,,,,,,,,,,
21,2,,24315-000140,,"O-RING 1B P-14.0",1,,,,,,,,,,,,,,,,,
22,1,,172455-78160,,"HOSE G712CY177S",1,,,,,,,,,,,,,,,,,
23,1,,172455-78330,,"HOSE G616CC170S",1,,,,,,,,,,,,,,,,,
24,1,,172455-78340,,"HOSE G616EY044",1,,,,,,,,,,,,,,,,,
25,1,,172455-78350,,"HOSE G806YY075",1,,,,,,,,,,,,,,,,,
26,1,,172455-78360,,"HOSE G806YY045S",1,,,,,,,,,,,,,,,,,
27,1,,172455-78370,,"HOSE G806YY120",1,,,,,,,,,,,,,,,,,
28,1,,172455-78380,,"HOSE G616YY068",1,,,,,,,,,,,,,,,,,
29,1,,172478-78630,,"HOSE F403BC089",1,,,,,,,,,,,,,,,,,
30,1,,172455-78730,,"HOSE G804BY071",1,,,,,,,,,,,,,,,,,
31,1,,23000-013000,,"CLAMP 13",3,,,,,,,,,,,,,,,,,
32,1,,23001-016000,,"HOSE CLAMP 16",6,,,,,,,,,,,,,,,,,
```

https://truckmanualshub.com/

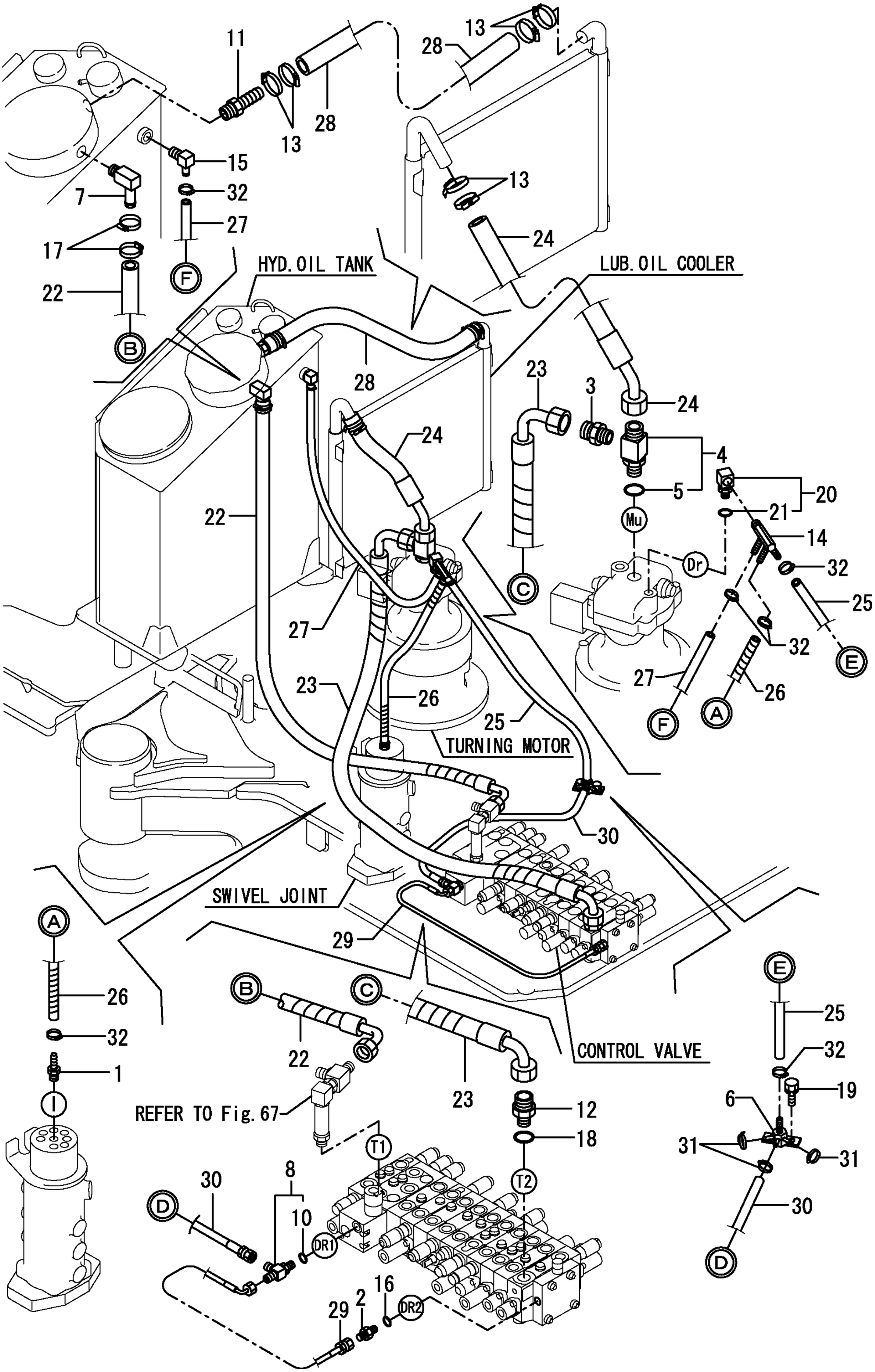

https://truckmanualshub.com/

```
1,1,,172457-76100,,"ADJUSTABLE TEE",1,,,,,,,,,,,,,,,,,
2,2,,24315-000110,,"O-RING 1B P-11.0",1,,,,,,,,,,,,,,,,,,
3,1,,172123-76121,,"JOINT PF1/4",3,,,,,,,,,,,,,,,,,,
4,1,,172123-76121,,"JOINT PF1/4",2,,,,,,,,,,,,,,,,,,
5,1,,172123-76121,,"JOINT PF1/4",4,,,,,,,,,,,,,,,,,,
6,1,,172123-76121,,"JOINT PF1/4",2,,,,,,,,,,,,,,,,,,
7,1,,172123-76121,,"JOINT PF1/4",2,,,,,,,,,,,,,,,,,,
8,1,,172187-76170,,THEETH,1,,,,,,,,,,,,,,,,,,
9,2,,24315-000110,,"O-RING 1B P-11.0",1,,,,,,,,,,,,,,,,,,,
10,1,,172141-76180,,CONNECTOR,2,,,,,,,,,,,,,,,,,,
11,2,,24315-000110,,"O-RING 1B P-11.0",2,,,,,,,,,,,,,,,,,,,
12,1,,172162-76180,,"JOINT 3-1/4 COMPL.",3,,,,,,,,,,,,,,,,,,,,
13,2,,24315-000110,,"O-RING 1B P-11.0",3,,,,,,,,,,,,,,,,,,,
14,1,,24315-000110,,"O-RING 1B P-11.0",3,,,,,,,,,,,,,,,,,,,
15,1,,24315-000110,,"O-RING 1B P-11.0",2,,,,,,,,,,,,,,,,,,,
16,1,,24315-000110,,"O-RING 1B P-11.0",4,,,,,,,,,,,,,,,,,,,
17,1,,24315-000110,,"O-RING 1B P-11.0",2,,,,,,,,,,,,,,,,,,,
18,1,,24315-000110,,"O-RING 1B P-11.0",2,,,,,,,,,,,,,,,,,,,
19,1,,172455-78600,,"HOSE F403BE046",1,,,,,,,,,,,,,,,,,,,
20,1,,172455-78610,,"HOSE F403BB054",1,,,,,,,,,,,,,,,,,,,
21,1,,172478-78610,,"HOSE F403BC143",1,,,,,,,,,,,,,,,,,,,
22,1,,172455-78620,,"HOSE F403BB073",1,,,,,,,,,,,,,,,,,,,
23,1,,172478-78620,,"HOSE F403BB038",1,,,,,,,,,,,,,,,,,,,
24,1,,172478-78650,,"HOSE F403BB100",1,,,,,,,,,,,,,,,,,,,
25,1,,172478-78660,,"HOSE F403BC-61",1,,,,,,,,,,,,,,,,,,,
26,1,,172455-78740,,"HOSE F403BC113S",1,,,,,,,,,,,,,,,,,,,
```

https://truckmanualshub.com/

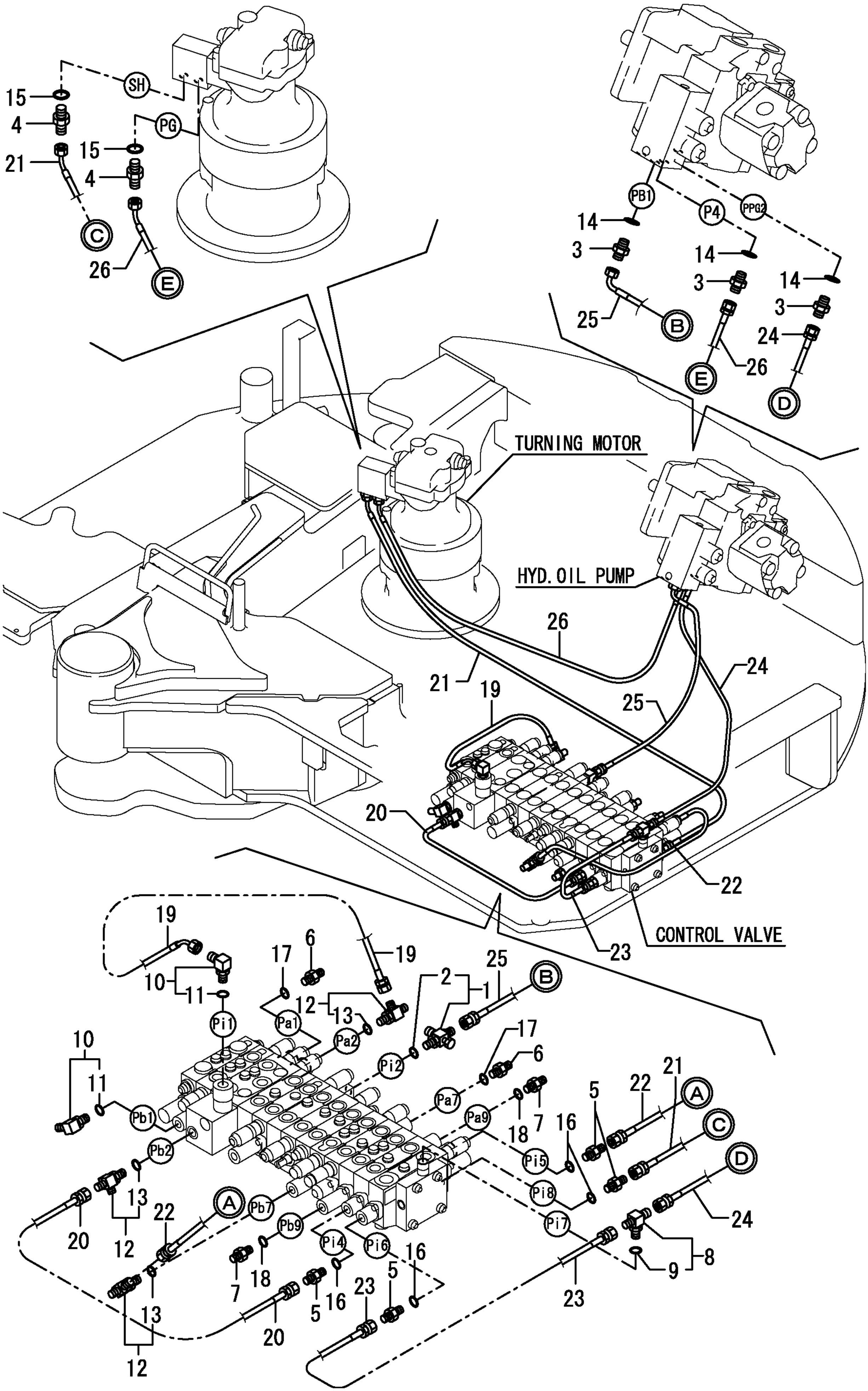

https://truckmanualshub.com/

```
1,1,,172187-61541-2,,"COVER,3RD(YELLOW:87)",1,,,,,,,,,,,,,,,,,
2,1,,172463-74700,,"BRACKET ASSY,PTO",1,,,,,,,,,,,,,,,,,
3,1,,172989-76120,,CONNECTOR,2,,,,,,,,,,,,,,,,,
4,1,,172165-76220,,NIPPLE,1,,,,,,,,,,,,,,,,,
5,1,,172176-76580-3,,"STOP VALVE(GREEN:86)",1,,,,,,,,,,,,,,,,,
6,1,,172455-76580,,"ELBOW G1/2-3/4",3,,,,,,,,,,,,,,,,,
7,2,,24315-000110,,"O-RING 1B P-11.0",1,,,,,,,,,,,,,,,,,
8,1,,172187-76821-2,,CONNECTOR(YELLOW:87),1,,,,,,,,,,,,,,,,,
9,1,,172478-78700,,"HOSE H112BE120S",1,,,,,,,,,,,,,,,,,
10,1,,172478-78700,,"HOSE H112BE120S",1,,,,,,,,,,,,,,,,,
11,1,,172478-78850,,"HOSE H112EE133S",1,,,,,,,,,,,,,,,,,
12,1,,172478-78860,,"HOSE G712BY025",1,,,,,,,,,,,,,,,,,
13,1,,23001-035000,,"HOSE CLAMP  35",2,,,,,,,,,,,,,,,,,
14,1,,23394-060000,,"JOINT 45RGI3/4",1,,,,,,,,,,,,,,,,,
15,1,,26013-080162,,"BOLT W/WASHER M8X16",2,,,,,,,,,,,,,,,,,
16,1,,26013-100202,,"BOLT W/WASHER M10X20",3,,,,,,,,,,,,,,,,,
17,1,,26013-100202,,"BOLT W/WASHER M10X20",2,,,,,,,,,,,,,,,,,
18,1,,26013-100302,,"BOLT M10X 30",2,,,,,,,,,,,,,,,,,
```

https://truckmanualshub.com/

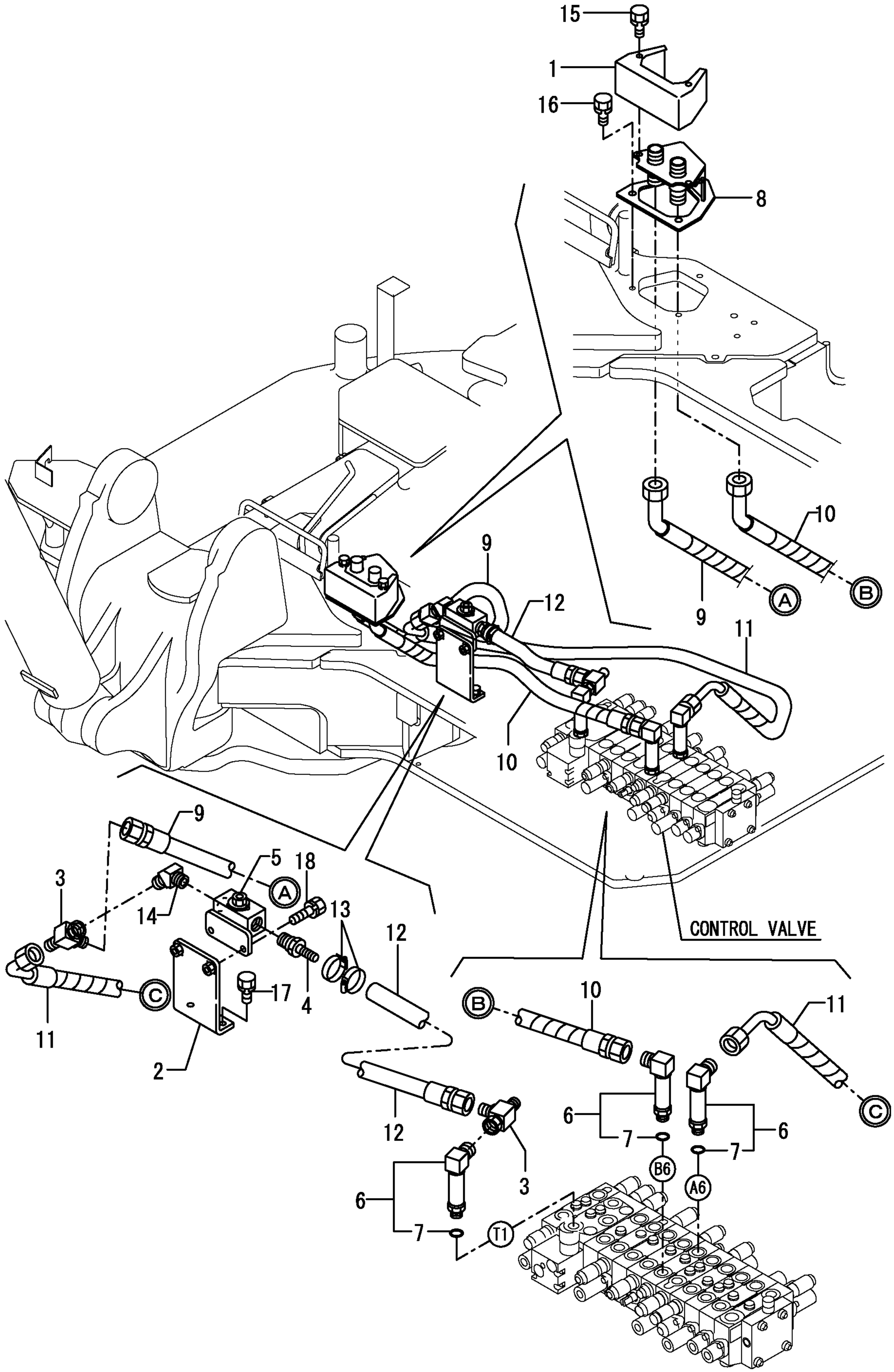

https://truckmanualshub.com/

```
1,1,,172730-75140,,ADAPTOR,2,,,,,,,,,,,,,,,,,,
2,1,,172123-76121,,"JOINT PF1/4",2,,,,,,,,,,,,,,,,,,
3,1,,172141-76940,,"ADAPTOR 1/2-3/8",1,,,,,,,,,,,,,,,,,,
4,1,,172112-77361,,CONNECTOR,4,,,,,,,,,,,,,,,,,,
5,1,,23391-030000,,"JOINT RGI 3/8",1,,,,,,,,,,,,,,,,,,
6,1,,23394-020000,,"JOINT 45RGI1/4",2,,,,,,,,,,,,,,,,,,
7,1,,23394-030000,,"JOINT 45RGI 3/8",2,,,,,,,,,,,,,,,,,,
8,1,,23394-040000,,"JOINT 45RGI1/2",4,,,,,,,,,,,,,,,,,,
9,1,,24315-000110,,"O-RING 1B P-11.0",2,,,,,,,,,,,,,,,,,,
10,1,,24315-000140,,"O-RING 1B P-14.0",2,,,,,,,,,,,,,,,,,,
11,1,,24315-000180,,"O-RING 1B P-18.0",4,,,,,,,,,,,,,,,,,,
12,1,,172187-78200,,HOSE,1,,,,,,,,,,,,,,,,,,
13,1,,172187-78200,,HOSE,1,,,,,,,,,,,,,,,,,,
14,1,,172187-78210,,HOSE,2,,,,,,,,,,,,,,,,,,
15,1,,172187-78230,,HOSE,1,,,,,,,,,,,,,,,,,,
16,1,,172187-78230,,HOSE,1,,,,,,,,,,,,,,,,,,
17,1,,172187-78230,,HOSE,1,,,,,,,,,,,,,,,,,,
18,1,,172187-78230,,HOSE,1,,,,,,,,,,,,,,,,,,
19,1,,172478-78320,,"HOSE F208BE112W",1,,,,,,,,,,,,,,,,,,
20,1,,172187-78440,,"HOSE H106BE082W",1,,,,,,,,,,,,,,,,,,
21,1,,172455-78520,,"HOSE P106BX055",1,,,,,,,,,,,,,,,,,,
22,1,,172455-78530,,"HOSE P108BX055",1,,,,,,,,,,,,,,,,,,
```

https://truckmanualshub.com/

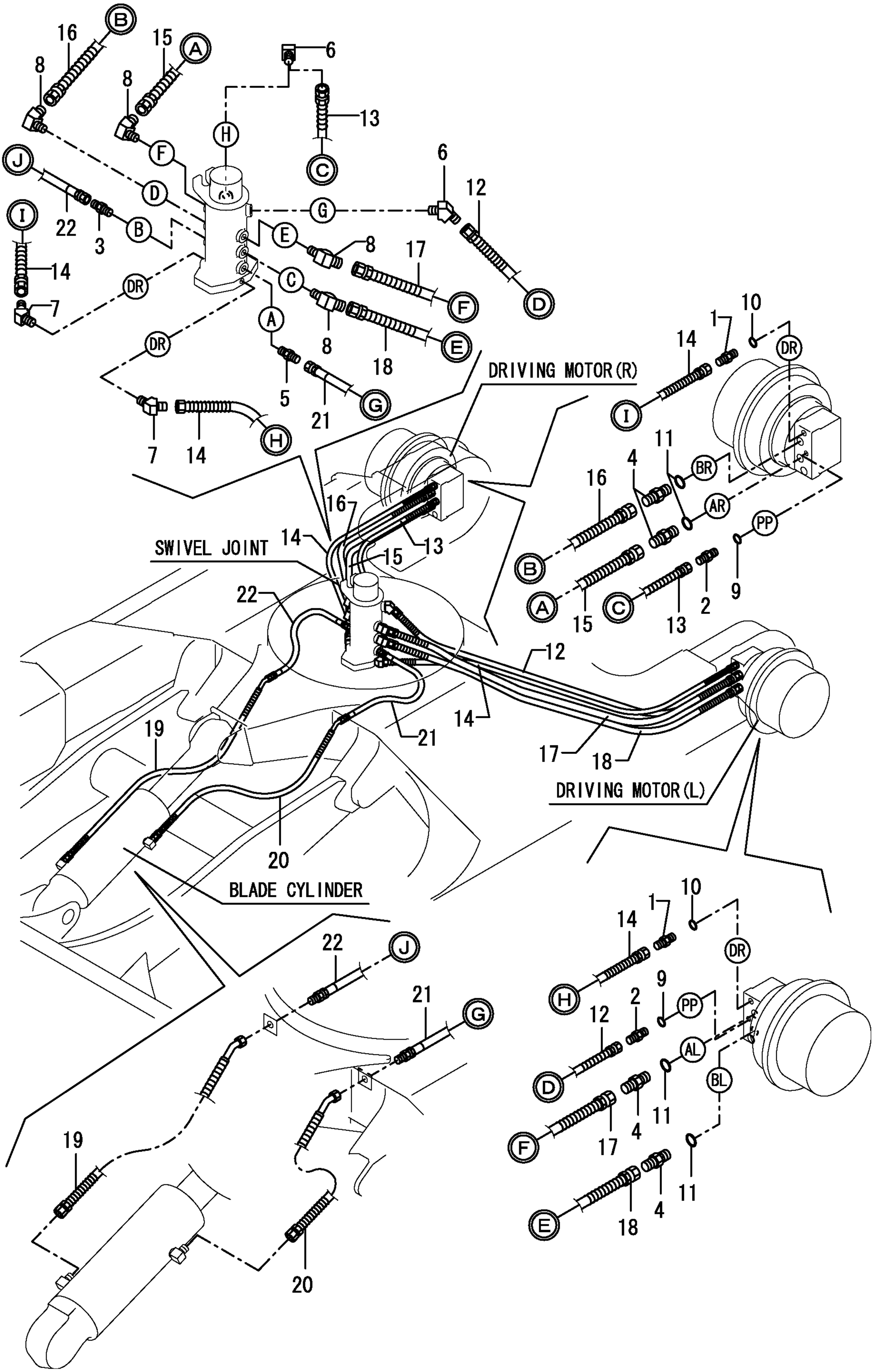

https://truckmanualshub.com/

```
1,1,,172444-17660,,CLIP,2,,,,,,,,,,,,,,,,,,
2,1,,172187-76400-1,,"TUBE,ARM (YELLOW:87)",2,,,,,,,,,,,,,,,,,,
3,1,,172187-76420-1,,"TUBE A,BUCKET   (87)",1,,,,,,,,,,,,,,,,,,
4,1,,172187-76440-1,,"TUBE B,BUCKET   (87)",1,,,,,,,,,,,,,,,,,,
5,1,,172478-76500,,"ANTIVIBRATION RUBBER",1,,,,,,,,,,,,,,,,,,
6,1,,172478-76510-1,,"CLAMP 250X38    (87)",2,,,,,,,,,,,,,,,,,,
7,1,,172187-76520,,"COLLAR, CLAMP",6,,,,,,,,,,,,,,,,,,
8,1,,172187-76530-1,,"CLAMP B,TUBE    (87)",2,,,,,,,,,,,,,,,,,,
9,1,,172142-76950,,"CLAMP 1/2",2,,,,,,,,,,,,,,,,,,
10,1,,22137-100000,,"WASHER 10,POLISHED",6,,,,,,,,,,,,,,,,,,
11,1,,26013-100502,,"BOLT M10X 50",6,,,,,,,,,,,,,,,,,,
12,1,,26013-120402,,"BOLT M12X 40",2,,,,,,,,,,,,,,,,,,
13,1,,172187-78240,,"HOSE H108BB065W",2,,,,,,,,,,,,,,,,,,
14,1,,172187-78410,,"HOSE H108BB063",1,,,,,,,,,,,,,,,,,,
15,1,,172187-78420,,"HOSE H108BB185",1,,,,,,,,,,,,,,,,,,
16,1,,172187-78580,,CLAMP,2,,,,,,,,,,,,,,,,,,
```

https://truckmanualshub.com/

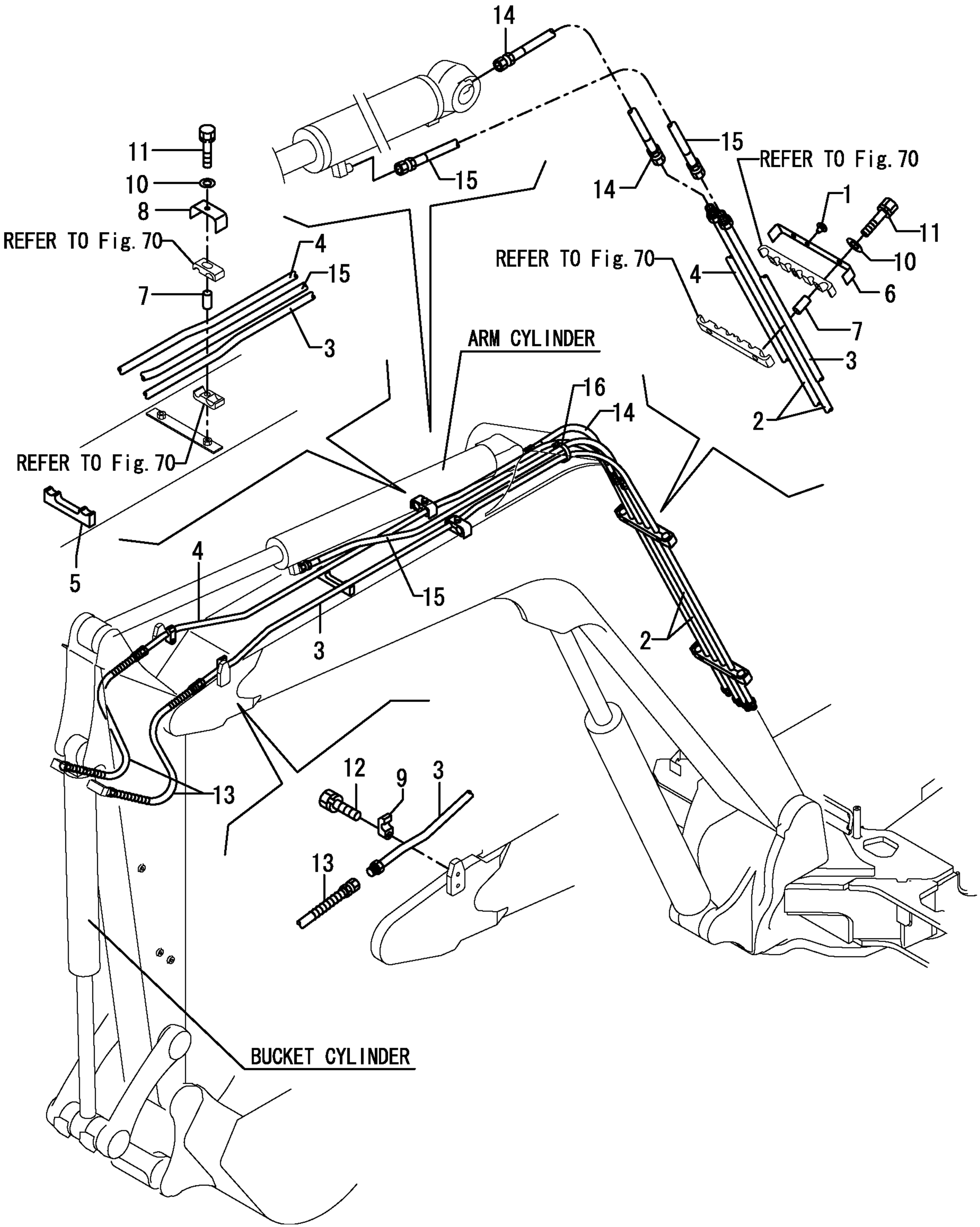

https://truckmanualshub.com/

```
1,1,,172142-76280,,"JOINT 3/4, SWIVEL",2,,,,,,,,,,,,,,,,,
2,2,,172142-77050,,"SEAL SET",2,,,,,,,,,,,,,,,,,
3,1,,172187-76460-1,,"TUBE,3RD (YELLOW:87)",1,,,,,,,,,,,,,,,,,,
4,1,,172187-76480-1,,"TUBE,3RD (YELLOW:87)",1,,,,,,,,,,,,,,,,,,
5,1,,172151-76600,,"ADAPTER PF3/4,BLIND",2,,,,,,,,,,,,,,,,,
6,1,,172478-76700-1,,"TUBE,3RD (YELLOW:87)",1,,,,,,,,,,,,,,,,,,
7,1,,172187-76930,,"RUBBER A",4,,,,,,,,,,,,,,,,,
8,1,,172142-76940,,"CLAMP 3/4(YELLOW:87)",2,,,,,,,,,,,,,,,,,,
9,1,,172187-76940,,"RUBBER B",4,,,,,,,,,,,,,,,,,
10,1,,172187-79220,,"HOSE G112AB090",1,,,,,,,,,,,,,,,,,
11,1,,172187-79230,,"HOSE G112AB084",1,,,,,,,,,,,,,,,,,
12,1,,172187-79240,,"HOSE G112CE092",2,,,,,,,,,,,,,,,,,
13,1,,172183-81160,,"TREE CLIP",4,,,,,,,,,,,,,,,,,
14,1,,172183-81170,,"TREE CLIP",2,,,,,,,,,,,,,,,,,
15,1,,26013-100252,,"BOLT W/WASHER M10X25",2,,,,,,,,,,,,,,,,,,
16,1,,26013-120552,,"BOLT M12X55",2,,,,,,,,,,,,,,,,,,
```

https://truckmanualshub.com/

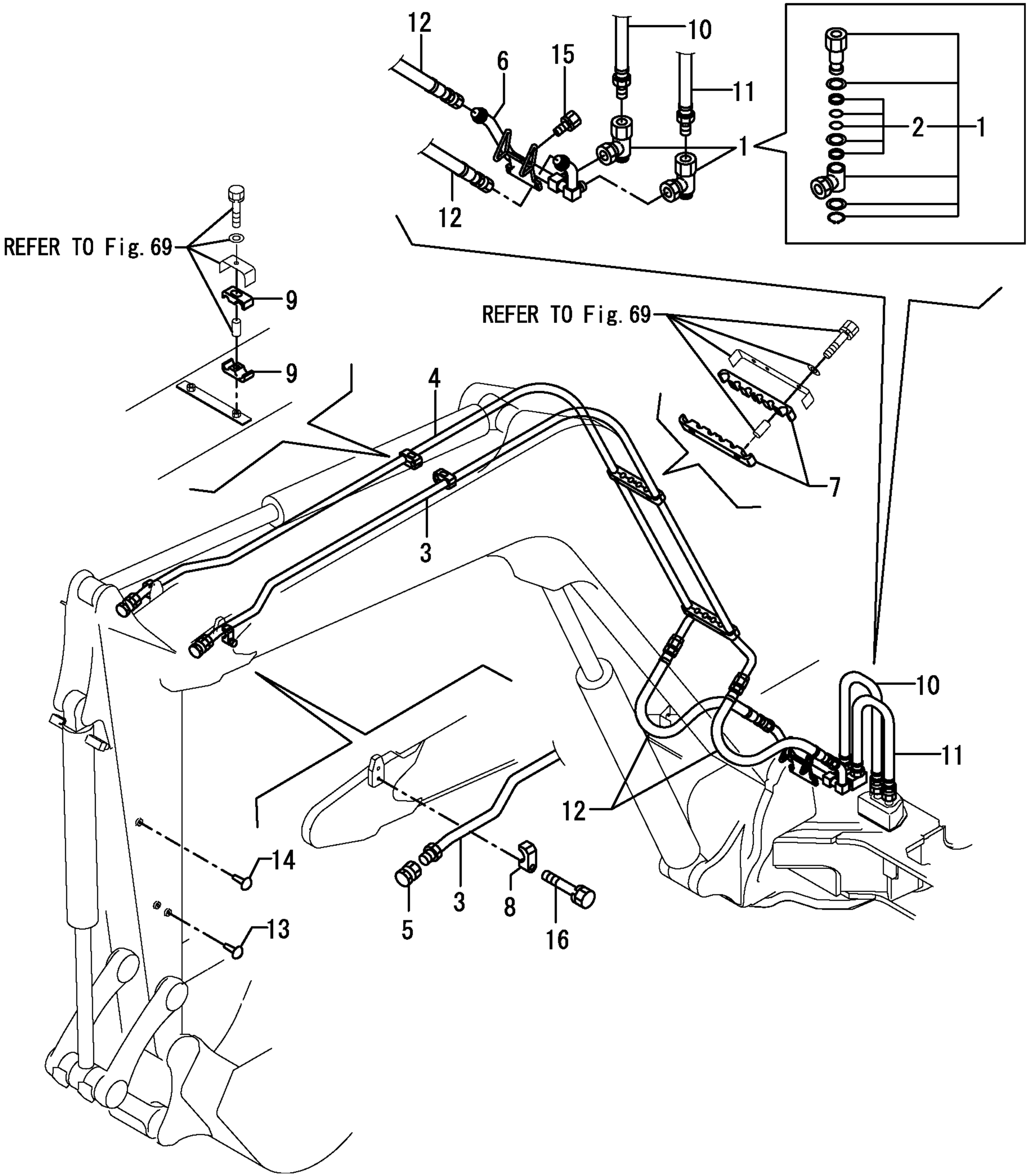

https://truckmanualshub.com/

```
1,1,,172173-76100,,CONNECTOR,1,,,,,,,,,,,,,,,,,
2,2,,24315-000110,,"O-RING 1B P-11.0",1,,,,,,,,,,,,,,,,,,
3,1,,172123-76121,,"JOINT PF1/4",2,,,,,,,,,,,,,,,,,
4,1,,172455-76220,,"CONNECTOR PF1/4",2,,,,,,,,,,,,,,,,,
5,1,,24315-000110,,"O-RING 1B P-11.0",4,,,,,,,,,,,,,,,,,,
6,1,,172478-78480,,"HOSE F403BE132S",1,,,,,,,,,,,,,,,,,
7,1,,172478-78490,,"HOSE F403BC125S",1,,,,,,,,,,,,,,,,,
8,1,,172478-78500,,"HOSE G804BY096",1,,,,,,,,,,,,,,,,,
9,1,,172478-78510,,"HOSE G804BY124S",1,,,,,,,,,,,,,,,,,,
```

https://truckmanualshub.com/

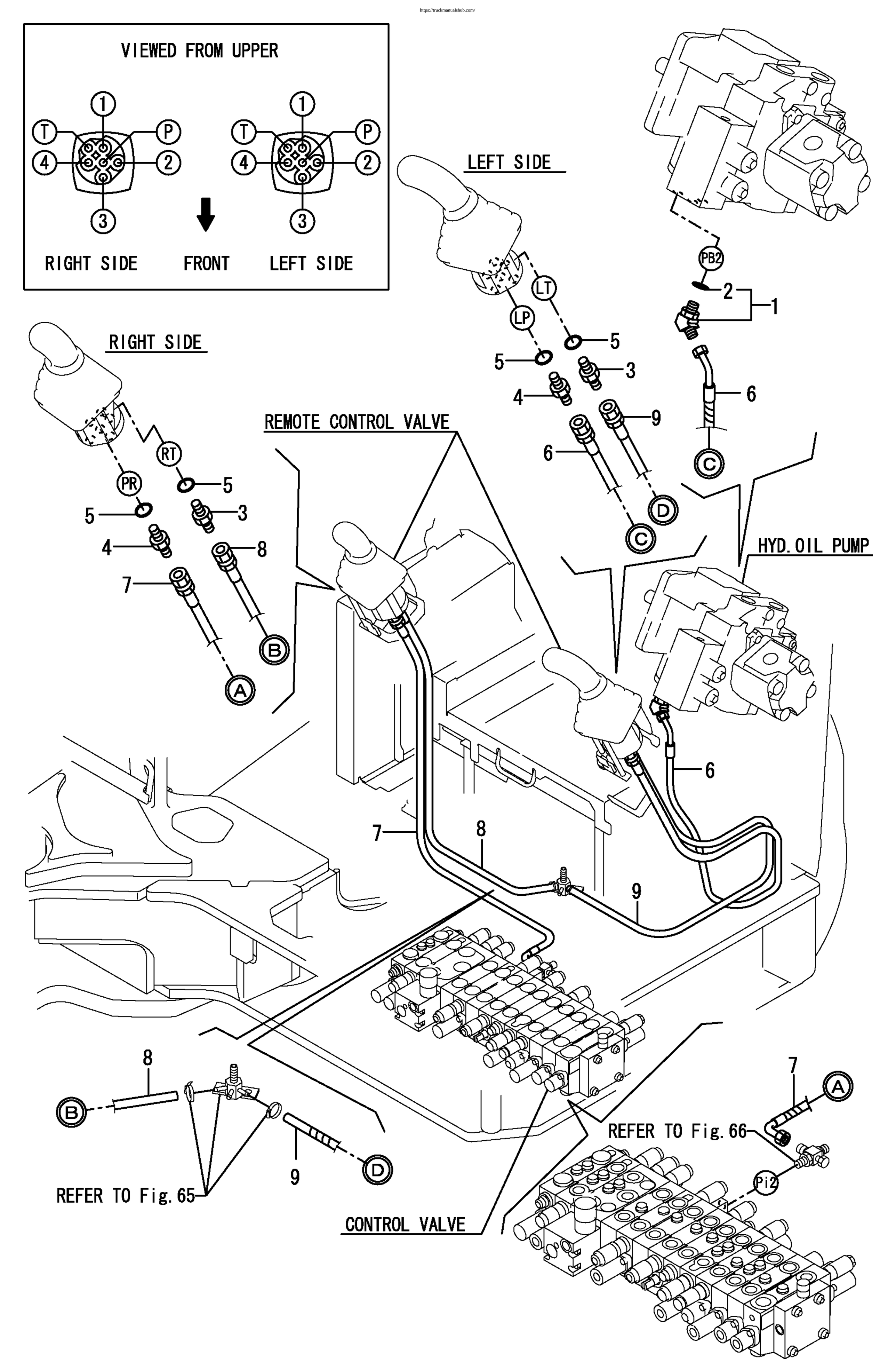

https://truckmanualshub.com/

```
1,1,,172123-76121,,"JOINT PF1/4",8,,,,,,,,,,,,,,,,,
2,1,,24315-000110,,"O-RING 1B P-11.0",8,,,,,,,,,,,,,,,,,,,
3,1,,172126-11510,,"BAND 300",5,,,,,,,,,,,,,,,,,
4,1,,172478-78400,,"HOSE F403BB130",1,,,,,,,,,,,,,,,,,,,
5,1,,172478-78410,,"HOSE F403BC160",1,,,,,,,,,,,,,,,,,,,
6,1,,172478-78420,,"HOSE F403BB179",1,,,,,,,,,,,,,,,,,,,
7,1,,172478-78430,,"HOSE F403BB128",1,,,,,,,,,,,,,,,,,,,
8,1,,172478-78440,,"HOSE F403BB120S",1,,,,,,,,,,,,,,,,,,,
9,1,,172478-78450,,"HOSE F403BB116S",1,,,,,,,,,,,,,,,,,,,
10,1,,172478-78460,,"HOSE F403BC186S",1,,,,,,,,,,,,,,,,,,,,
11,1,,172478-78470,,"HOSE F403BC147S",1,,,,,,,,,,,,,,,,,,,,
12,1,,172472-78800,,SPONGE,1,,,,,,,,,,,,,,,,,
13,1,,172165-79810,,SPONGE,1,,,,,,,,,,,,,,,,,
14,1,,172122-79930,,"CLAMP B",4,,,,,,,,,,,,,,,,,,
```

https://truckmanualshub.com/

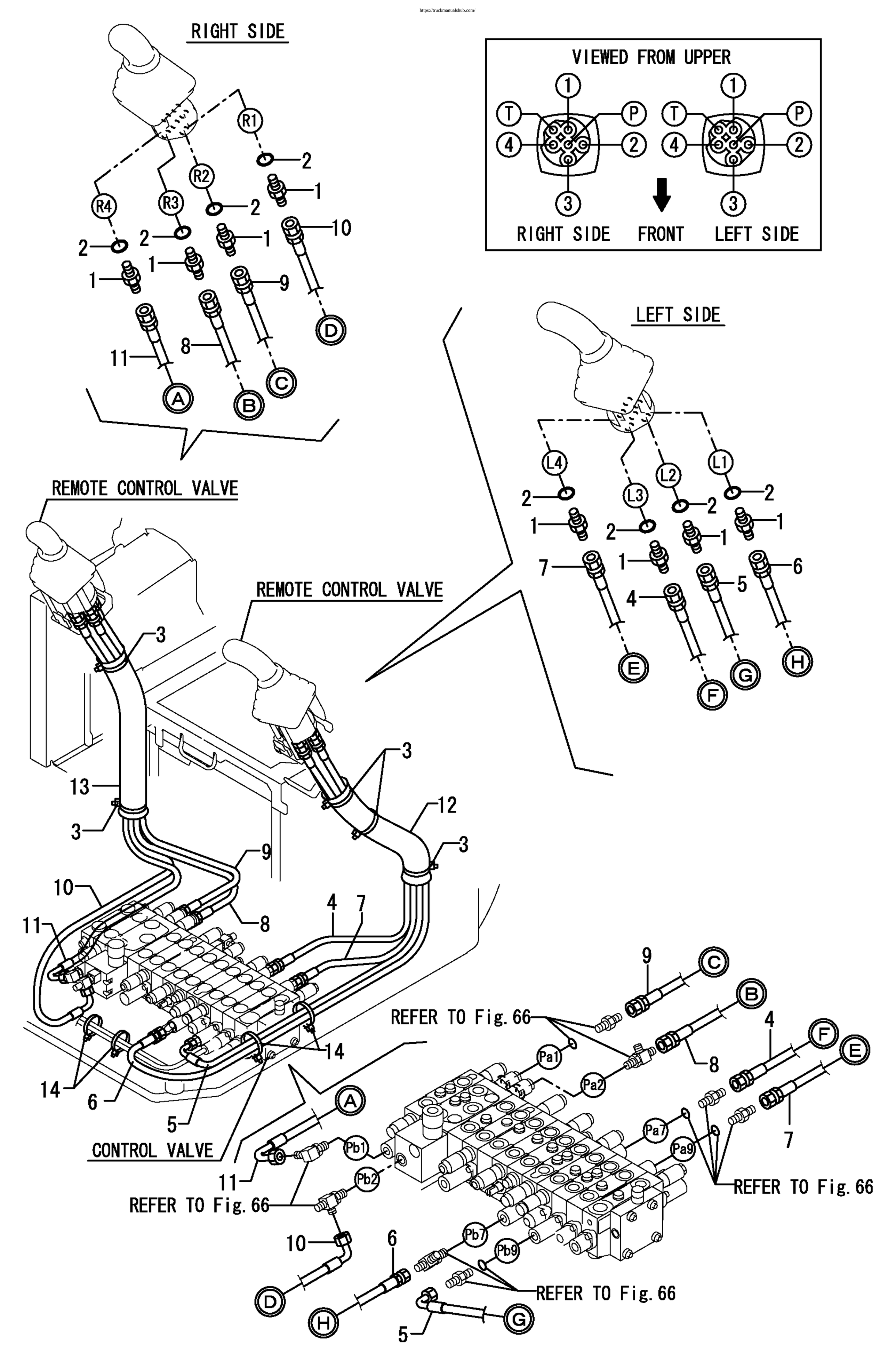

https://truckmanualshub.com/

```
1,1,,172112-77480,,"ELBOW 1/8, STREET",1,,,,,,,,,,,,,,,,,
2,1,,172112-77580,,"JOINT 1/8",1,,,,,,,,,,,,,,,,,
3,1,,172141-77800,,"JOINT, GREASE",4,,,,,,,,,,,,,,,,,
4,1,,172164-77800,,"HOSE P602YY050",1,,,,,,,,,,,,,,,,,
5,1,,172187-77800,,"HOSE P202AB185",1,,,,,,,,,,,,,,,,,
6,1,,172164-77810,,"HOSE P602YY070",1,,,,,,,,,,,,,,,,,
7,1,,172312-77820,,"FITTING, GREASE",1,,,,,,,,,,,,,,,,,
8,1,,24761-020000,,"NIPPLE PT1/8,GREASE",2,,,,,,,,,,,,,,,,,,
9,1,,24761-020000,,"NIPPLE PT1/8,GREASE",1,,,,,,,,,,,,,,,,,,
```

https://truckmanualshub.com/

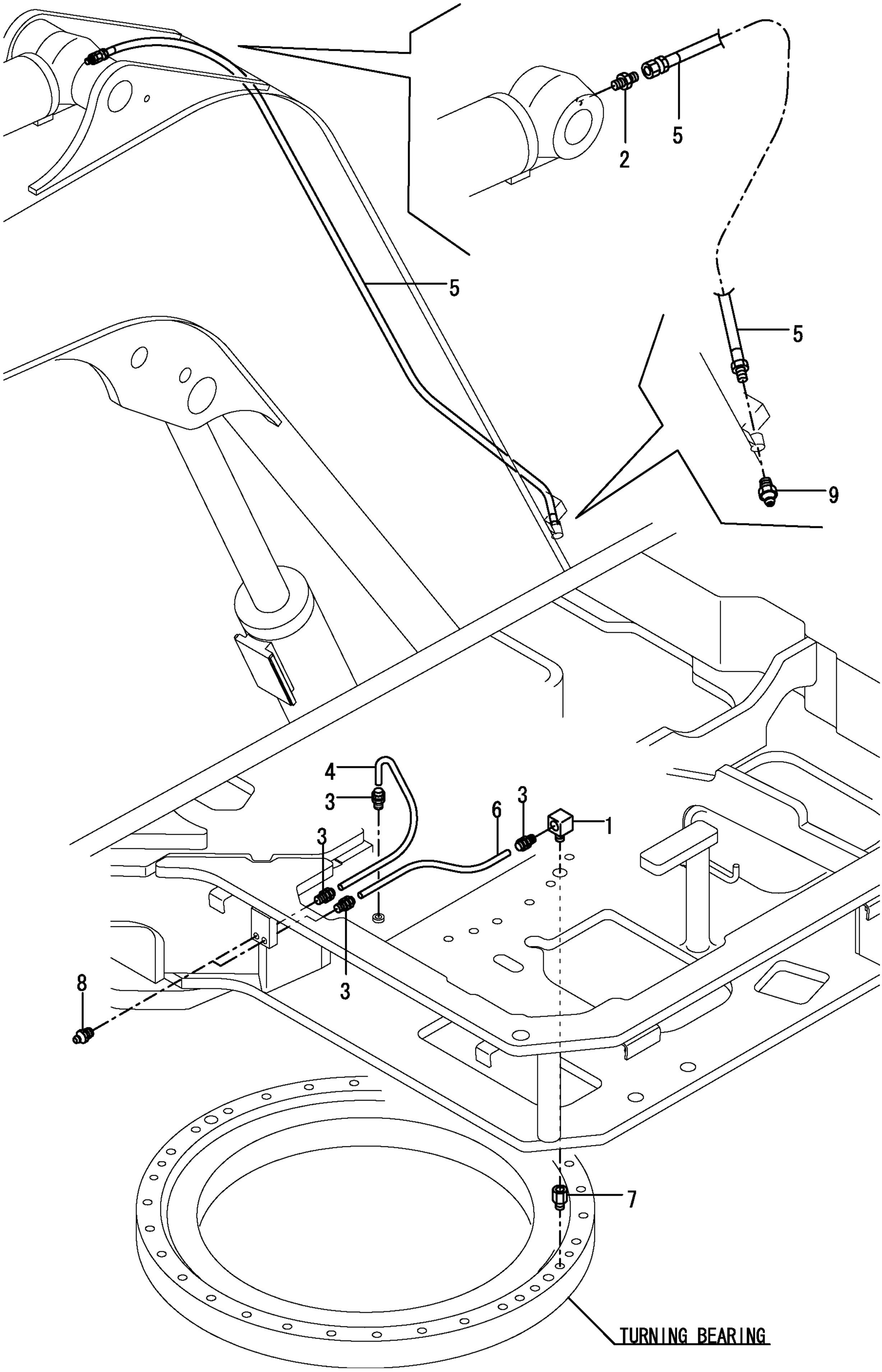

```
1,1,,172155-45790,,SPACER,2,,,,,,,,,,,,,,,,,
2,1,,172176-81700,,SHIM,1,,,,,,,,,,,,,,,,,
3,1,,172176-81710,,SHIM,1,,,,,,,,,,,,,,,,,
4,1,,172187-81800,,"PIN 70X200",1,,,,,,,,,,,,,,,,,
5,1,,172187-81970,,WASHER,1,,,,,,,,,,,,,,,,,
6,1,,172147-82230,,SHIM,4,,,,,,,,,,,,,,,,,
7,1,,172147-82250,,SHIM,4,,,,,,,,,,,,,,,,,
8,1,,172187-82300-1,,"BRACKET,BOOM    (87)",1,,,,,,,,,,,,,,,,,,
9,2,,172162-81680,,"SEAL 100X120X7,DUST",2,,,,,,,,,,,,,,,,,,
11,2,,172187-82320,,"BUSH 100X90",2,,,,,,,,,,,,,,,,,
12,2,,24321-001000,,"O-RING 1A G-100.0",2,,,,,,,,,,,,,,,,,
13,1,,172187-82330,,"PIN 100X487",1,,,,,,,,,,,,,,,,,
14,1,,172187-82340,,"PIN 80X435",1,,,,,,,,,,,,,,,,,
15,1,,172187-82370,,"PIN 60X144",1,,,,,,,,,,,,,,,,,
16,1,,172187-82390,,"PIN 60X155",1,,,,,,,,,,,,,,,,,
17,1,,172187-82400,,"SHIM 100X160X0.5",1,,,,,,,,,,,,,,,,,
18,1,,172187-82410,,"SHIM 100X160X0.8",1,,,,,,,,,,,,,,,,,
19,1,,172187-82420,,"BOLT 18X230",1,,,,,,,,,,,,,,,,,
20,1,,172187-82430,,"WASHER 15X90X6",1,,,,,,,,,,,,,,,,,
21,1,,172187-82450,,"SHIM 61X110X3.2",1,,,,,,,,,,,,,,,,,
22,1,,172162-83600,,"SHIM 80X155X0.5",1,,,,,,,,,,,,,,,,,
23,1,,172162-83610,,"SHIM 80X155X1.2",1,,,,,,,,,,,,,,,,,
24,1,,172162-94280,,"PLATE,LOCK(GREEN:88)",1,,,,,,,,,,,,,,,,,,
25,1,,22157-140000,,"WASHER 14",1,,,,,,,,,,,,,,,,
26,1,,22217-140000,,"SPRING WASHER 14",3,,,,,,,,,,,,,,,,,
27,1,,22242-001000,,"CIRCLIP  100",1,,,,,,,,,,,,,,,,
28,1,,24761-020000,,"NIPPLE PT1/8,GREASE",2,,,,,,,,,,,,,,,,,
29,1,,26013-120302,,"BOLT W/WASHER M12X30",2,,,,,,,,,,,,,,,,,,
30,1,,26116-121402,,"BOLT M12X140 PLATED",1,,,,,,,,,,,,,,,,,
31,1,,26116-140252,,"BOLT M14X 25 PLATED",1,,,,,,,,,,,,,,,,,
32,1,,26116-140352,,"BOLT M14X 35 PLATED",2,,,,,,,,,,,,,,,,,
33,1,,26716-120002,,"NUT 12",2,,,,,,,,,,,,,,,,
34,1,,26716-180002,,"NUT M18",2,,,,,,,,,,,,,,,,
```

https://truckmanualshub.com/

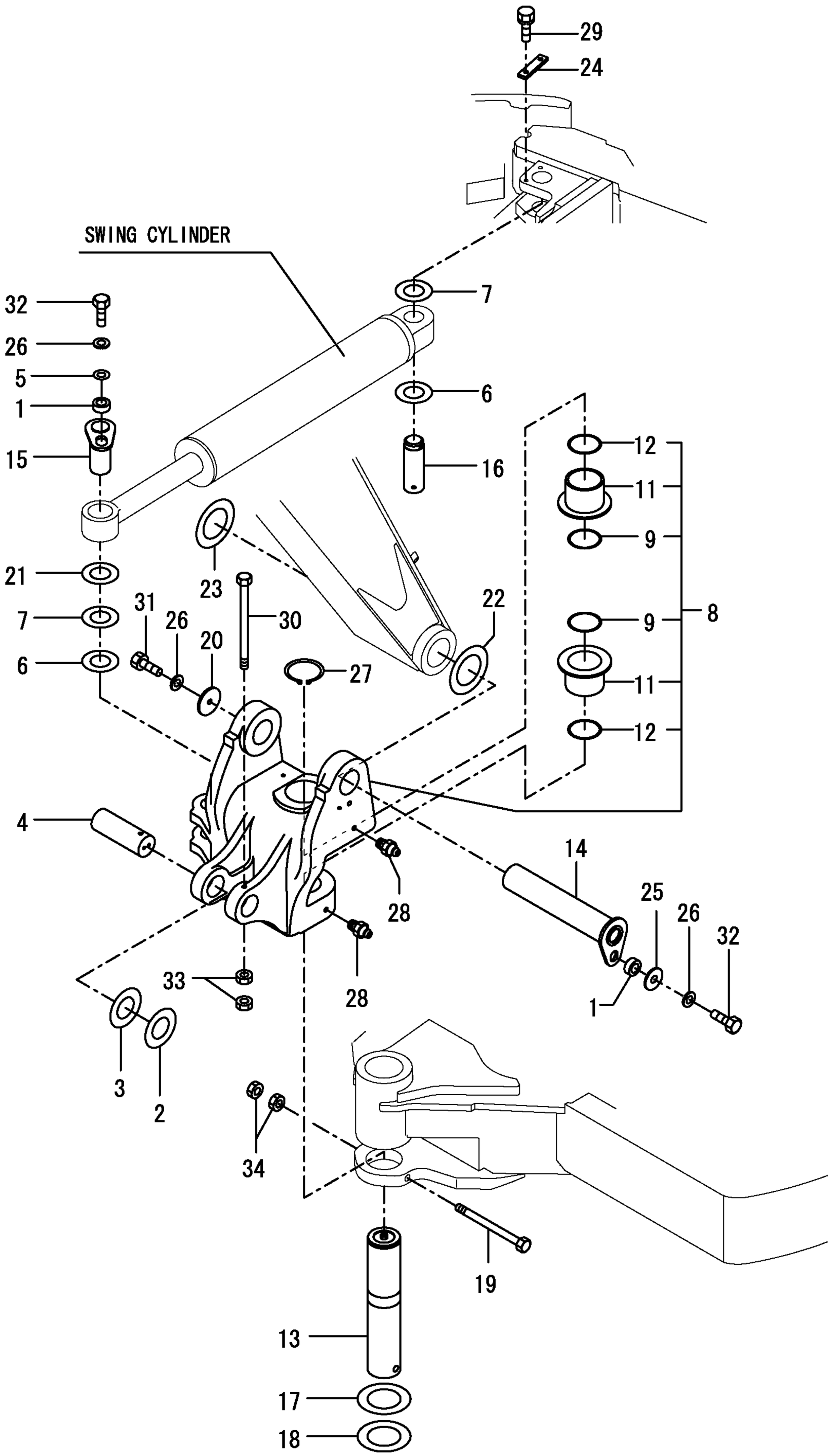

```
1,1,,172155-45790,,SPACER,2,,,,,,,,,,,,,,,,,,
2,1,,172187-81100-1,,"BOOM ASSY(YELLOW:87)",1,,,,,,,,,,,,,,,,,,
3,2,,172162-81370,,"BUSH 80X95",2,,,,,,,,,,,,,,,,,,
4,2,,172162-81430,,"SEAL 80X95X5,DUST",2,,,,,,,,,,,,,,,,,,
5,1,,172176-81700,,SHIM,1,,,,,,,,,,,,,,,,,,
6,1,,172176-81710,,SHIM,1,,,,,,,,,,,,,,,,,,
7,1,,172187-81750,,"PIN 60X307",1,,,,,,,,,,,,,,,,,,
8,1,,172187-81810,,"PIN 70X252",1,,,,,,,,,,,,,,,,,,
9,1,,172187-81840,,"PIN 60X243",1,,,,,,,,,,,,,,,,,,
10,1,,172187-81970,,WASHER,1,,,,,,,,,,,,,,,,,,
11,1,,172147-82140,,WASHER,1,,,,,,,,,,,,,,,,,,
12,1,,172147-82230,,SHIM,1,,,,,,,,,,,,,,,,,,
13,1,,172147-82250,,SHIM,1,,,,,,,,,,,,,,,,,,
14,1,,172162-83560,,"SHIM 60X120X0.5",1,,,,,,,,,,,,,,,,,,
15,1,,172162-83570,,"SHIM 60X120X1.2",1,,,,,,,,,,,,,,,,,,
16,1,,22157-140000,,"WASHER 14",2,,,,,,,,,,,,,,,,,,
17,1,,22217-140000,,"SPRING WASHER 14",3,,,,,,,,,,,,,,,,,,
18,1,,24761-040000,,"NIPPLE B,GREASE",1,,,,,,,,,,,,,,,,,,
19,1,,26013-120252,,"BOLT M12X 25",1,,,,,,,,,,,,,,,,,,
20,1,,26116-140252,,"BOLT M14X 25 PLATED",1,,,,,,,,,,,,,,,,,,
21,1,,26116-140352,,"BOLT M14X 35 PLATED",2,,,,,,,,,,,,,,,,,,
```

https://truckmanualshub.com/

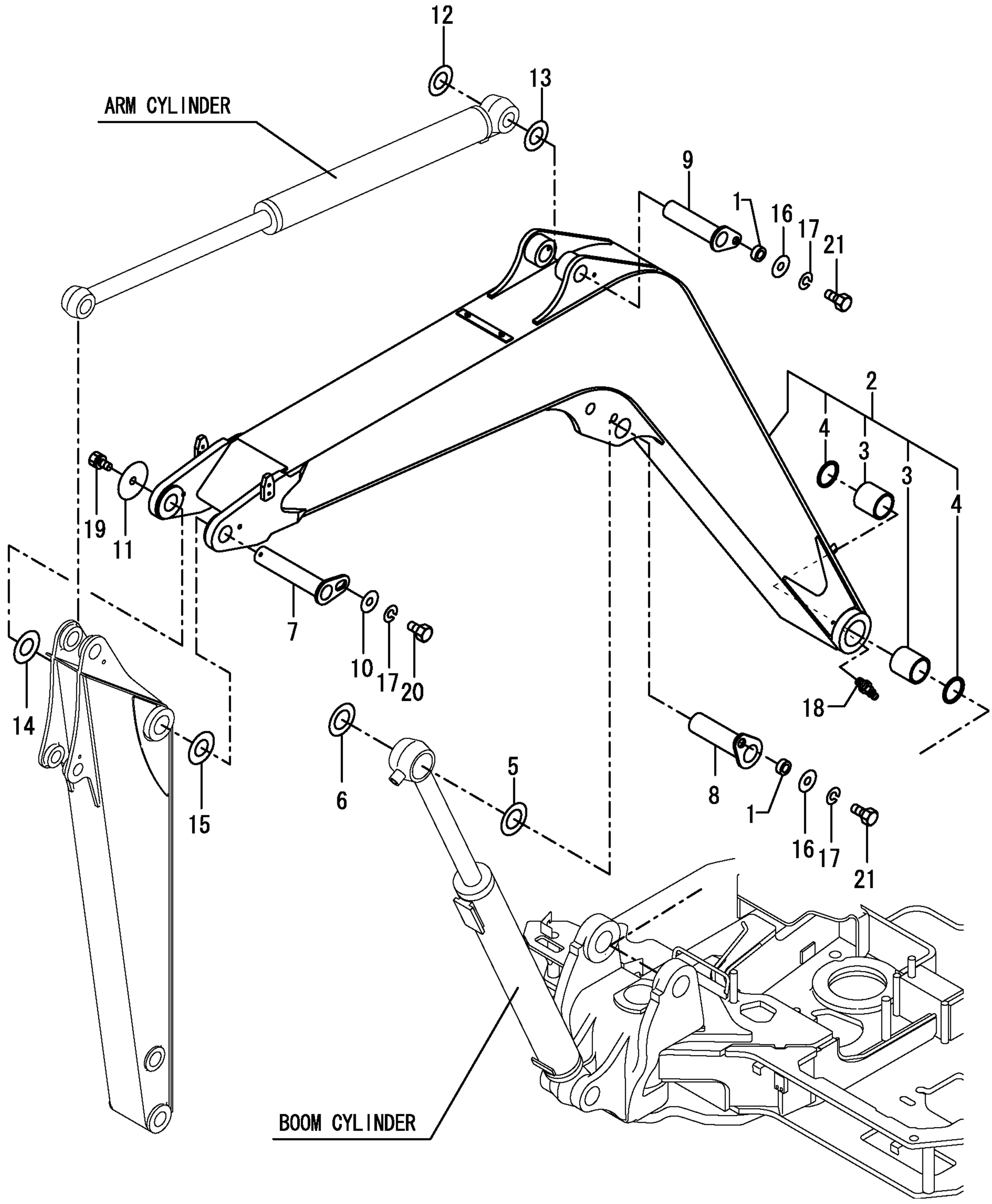

```
1,1,,172155-45790,,SPACER,1,,,,,,,,,,,,,,,,,,
2,1,,172187-81503-1,,"ARM ASSY(1650)  (87)",1,,,,,,,,,,,,,,,,,,,,
3,2,,172162-81050,,"SEAL 60X75X6,DUST",2,,,,,,,,,,,,,,,,,,,,
4,2,,172147-81400,,BUSH,2,,,,,,,,,,,,,,,,,,,
5,2,,172187-81710,,"BUSH 50X75",4,,,,,,,,,,,,,,,,,,,
6,2,,172162-82340,,"SEAL 50X60X6,DUST",4,,,,,,,,,,,,,,,,,,,,
7,1,,172164-81670,,SPACER,1,,,,,,,,,,,,,,,,,,
8,1,,172187-81861,,"PIN 60X155",1,,,,,,,,,,,,,,,,,,,
9,1,,172187-81880,,"PIN 50X144",1,,,,,,,,,,,,,,,,,,,
10,1,,172147-82230,,SHIM,1,,,,,,,,,,,,,,,,,,,
11,1,,172147-82250,,SHIM,1,,,,,,,,,,,,,,,,,,,
12,1,,172165-82520,,"SHIM 50X85X0.5",1,,,,,,,,,,,,,,,,,,,
13,1,,172165-82530,,"SHIM 50X85X1.2",1,,,,,,,,,,,,,,,,,,,
14,1,,22157-120000,,"WASHER 12",1,,,,,,,,,,,,,,,,,,,
15,1,,22157-140000,,"WASHER 14",1,,,,,,,,,,,,,,,,,,,
16,1,,22217-140000,,"SPRING WASHER 14",1,,,,,,,,,,,,,,,,,,,
17,1,,24761-020000,,"NIPPLE PT1/8,GREASE",1,,,,,,,,,,,,,,,,,,,
18,1,,24761-040000,,"NIPPLE B,GREASE",1,,,,,,,,,,,,,,,,,,,
19,1,,26013-120302,,"BOLT W/WASHER M12X30",1,,,,,,,,,,,,,,,,,,,
20,1,,26116-140352,,"BOLT M14X 35 PLATED",1,,,,,,,,,,,,,,,,,,,
```

https://truckmanualshub.com/

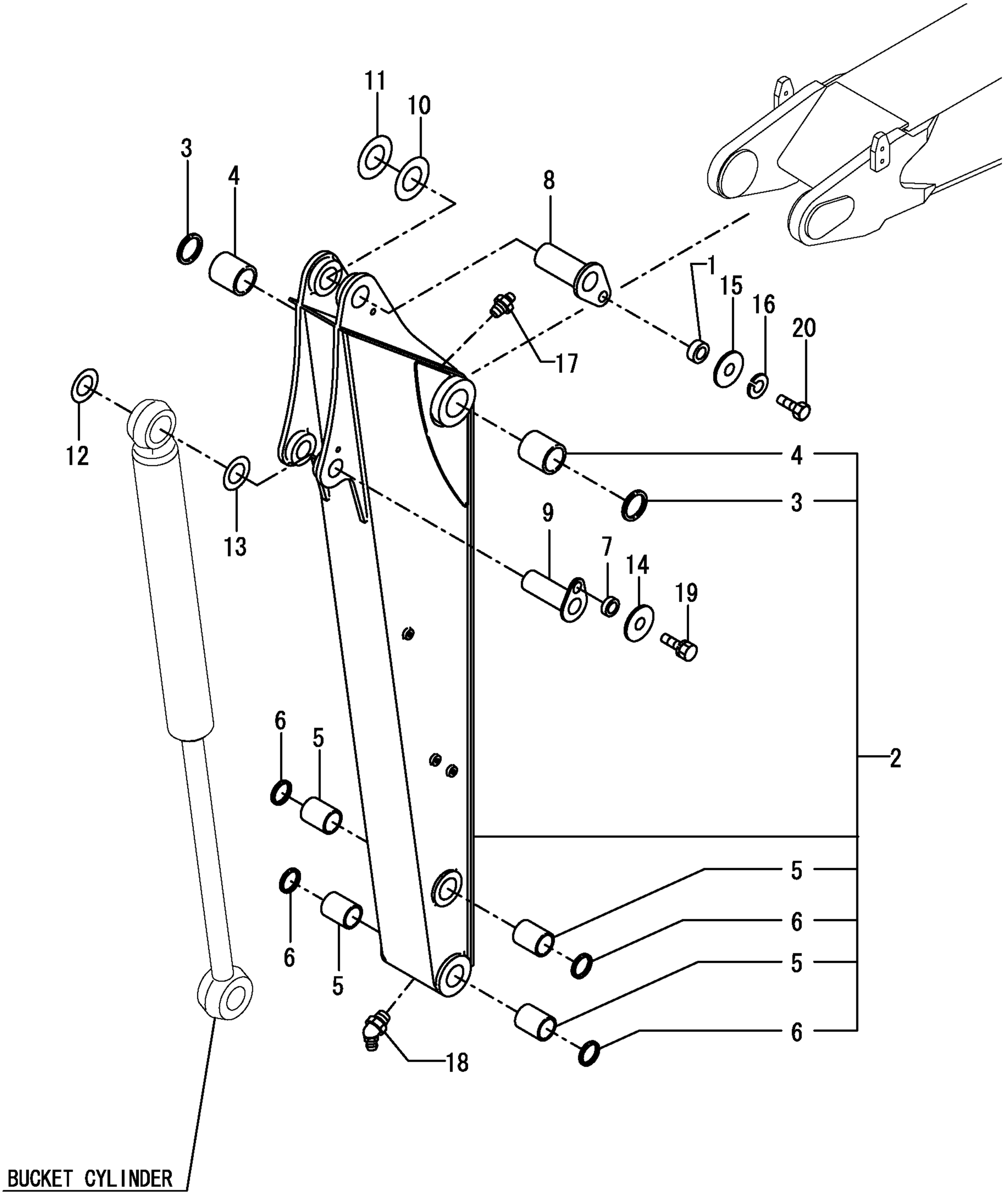

https://truckmanualshub.com/

```
1,1,,172147-82230,,SHIM,1,,,,,,,,,,,,,,,,,
2,1,,172147-82250,,SHIM,1,,,,,,,,,,,,,,,,,
3,1,,172455-82301-1,,"BUCKET LINK     (87)",1,,,,,,,,,,,,,,,,,
4,2,,172162-82340,,"SEAL 50X60X6,DUST",2,,,,,,,,,,,,,,,,,
5,2,,172455-82360,,"BUSH 60X47",2,,,,,,,,,,,,,,,,,
6,2,,172455-82410,,"DUST SEAL 60X70X4",4,,,,,,,,,,,,,,,,,
7,2,,172187-83040,,"BUSHING 50X60X54.5",2,,,,,,,,,,,,,,,,,
8,1,,172455-82380-1,,"ARM, BUCKET R   (87)",1,,,,,,,,,,,,,,,,,
9,1,,172455-82391-1,,"ARM, BUCKET L   (87)",1,,,,,,,,,,,,,,,,,
10,1,,172165-82520,,"SHIM 50X85X0.5",1,,,,,,,,,,,,,,,,,
11,1,,172165-82530,,"SHIM 50X85X1.2",1,,,,,,,,,,,,,,,,,
12,1,,172455-83350,,"PIN 60X248",1,,,,,,,,,,,,,,,,,
13,1,,172455-83360,,"PIN 50X248",1,,,,,,,,,,,,,,,,,
14,1,,24761-020000,,"NIPPLE PT1/8,GREASE",3,,,,,,,,,,,,,,,,,
15,1,,24761-050000,,"NIPPLE C,GREASE",2,,,,,,,,,,,,,,,,,
16,1,,26116-161202,,"BOLT M16X120 PLATED",2,,,,,,,,,,,,,,,,,
17,1,,26716-160002,,"NUT M16",4,,,,,,,,,,,,,,,,,
```

https://truckmanualshub.com/

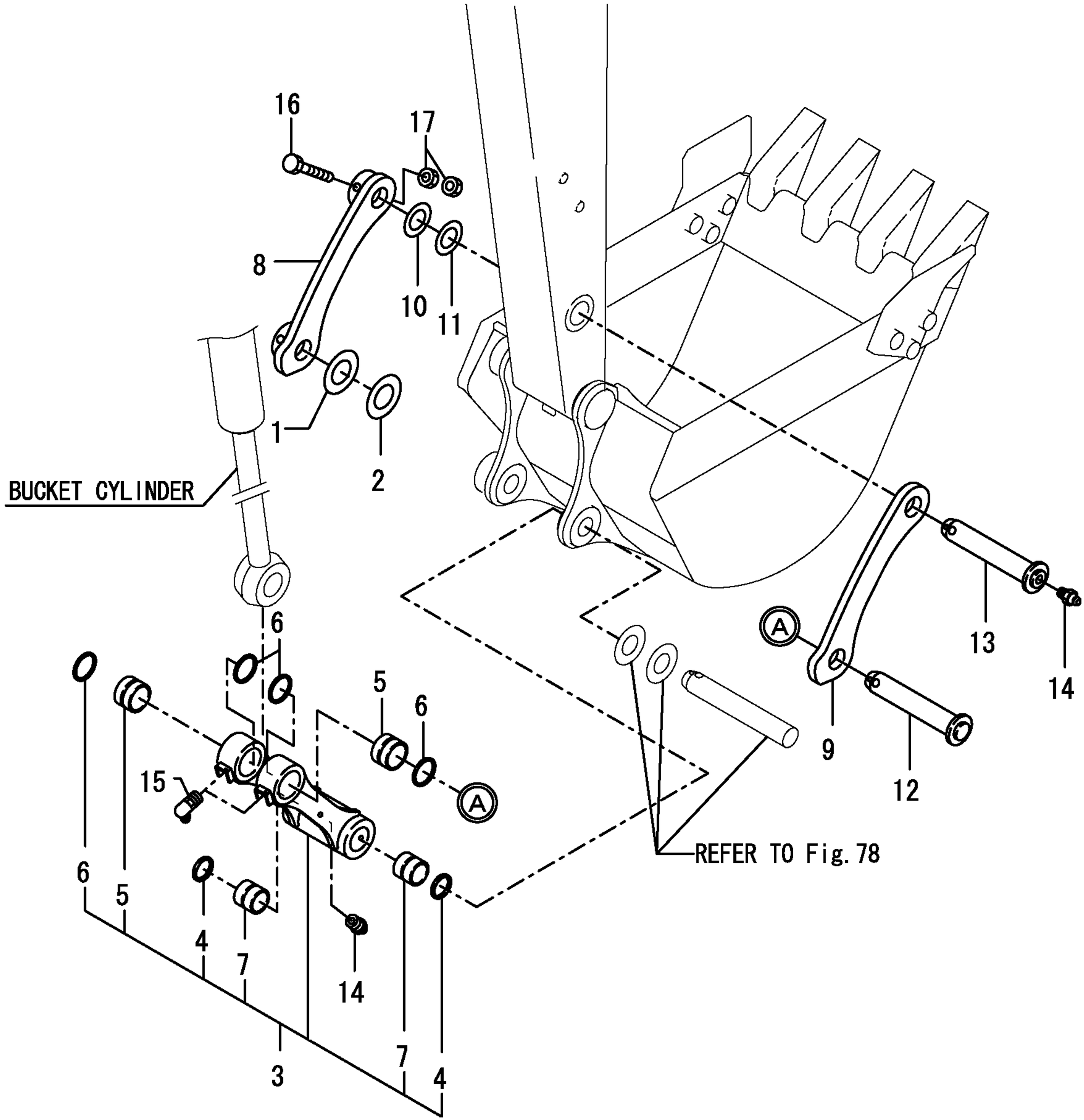

https://truckmanualshub.com/

```
1,1,,172162-82360,,"O-RING 86X8",2,,,,,,,,,,,,,,,,,,
2,1,,172455-83340,,"PIN 50X301",2,,,,,,,,,,,,,,,,,,
3,1,,172162-83540,,"SHIM 50X110X0.5",2,,,,,,,,,,,,,,,,,,
4,1,,172162-83550,,"SHIM 50X110X1.2",2,,,,,,,,,,,,,,,,,,
5,1,,26116-161302,,"BOLT M16X130 PLATED",2,,,,,,,,,,,,,,,,,,,
6,1,,26716-160002,,"NUT M16",4,,,,,,,,,,,,,,,,,,
```

https://truckmanualshub.com/

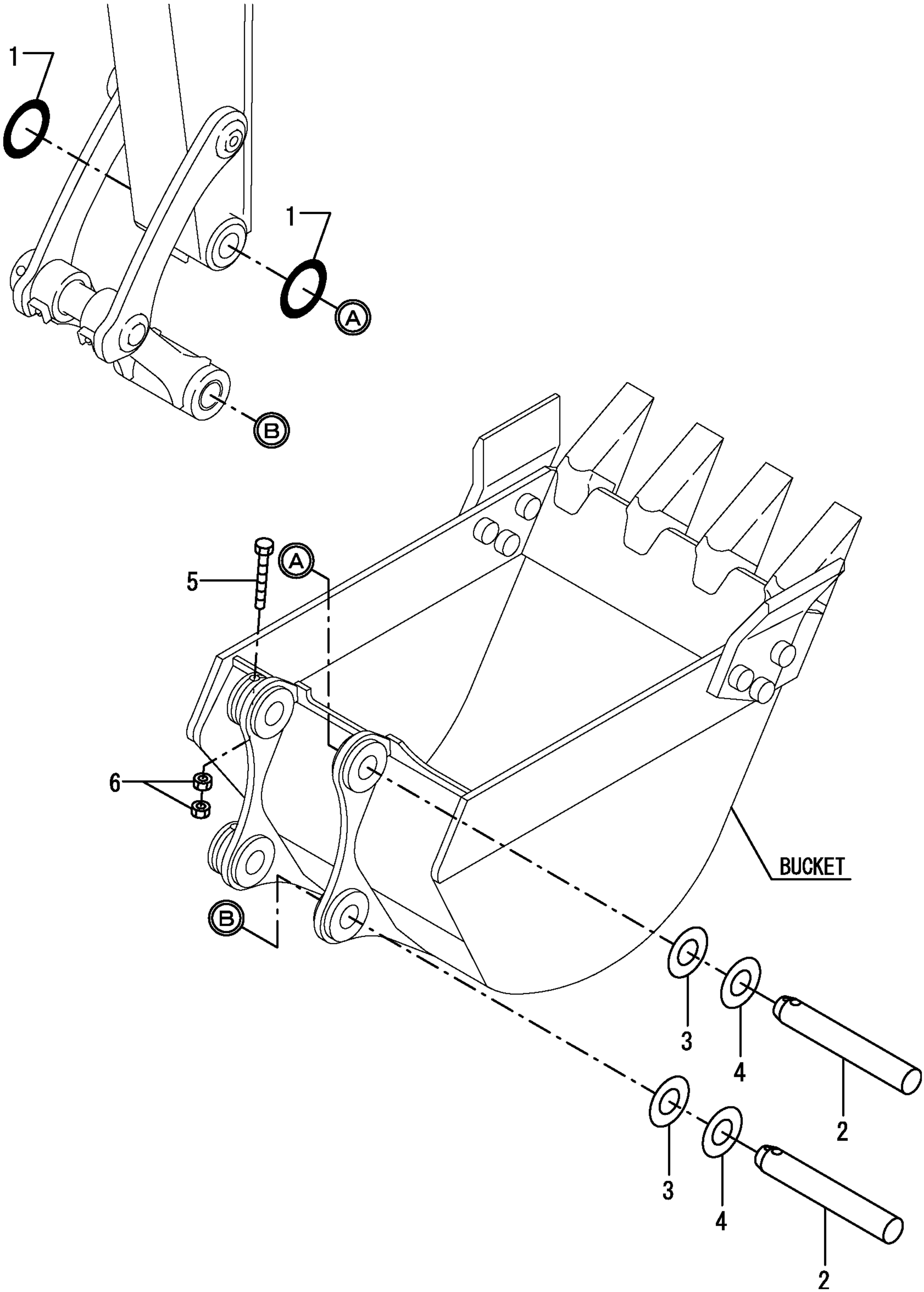

https://truckmanualshub.com/

```
1,1,,172155-45790,,SPACER,2,,,,,,,,,,,,,,,,,,
2,1,,172147-82230,,SHIM,4,,,,,,,,,,,,,,,,,,
3,1,,172147-82250,,SHIM,4,,,,,,,,,,,,,,,,,,
4,1,,172478-94100-1,,"BLADE CMP (GREEN:82)",1,,,,,,,,,,,,,,,,,,,
5,2,,172162-81050,,"SEAL 60X75X6,DUST",4,,,,,,,,,,,,,,,,,,
6,2,,172162-81060,,"BUSH 60X55",2,,,,,,,,,,,,,,,,,,
7,1,,172162-94270,,PIN,2,,,,,,,,,,,,,,,,,,
8,1,,172162-94280-1,,"PLATE,LOCK(GREEN:82)",2,,,,,,,,,,,,,,,,,,,
9,1,,172187-94300,,"PIN 60X147",2,,,,,,,,,,,,,,,,,,
10,1,,22157-140000,,"WASHER 14",2,,,,,,,,,,,,,,,,,,
11,1,,22217-140000,,"SPRING WASHER 14",2,,,,,,,,,,,,,,,,,,
12,1,,24761-020000,,"NIPPLE PT1/8,GREASE",2,,,,,,,,,,,,,,,,,,
13,1,,24761-040000,,"NIPPLE B,GREASE",2,,,,,,,,,,,,,,,,,,
14,1,,26013-120302,,"BOLT W/WASHER M12X30",4,,,,,,,,,,,,,,,,,,
15,1,,26116-140352,,"BOLT M14X 35 PLATED",2,,,,,,,,,,,,,,,,,,
```

https://truckmanualshub.com/

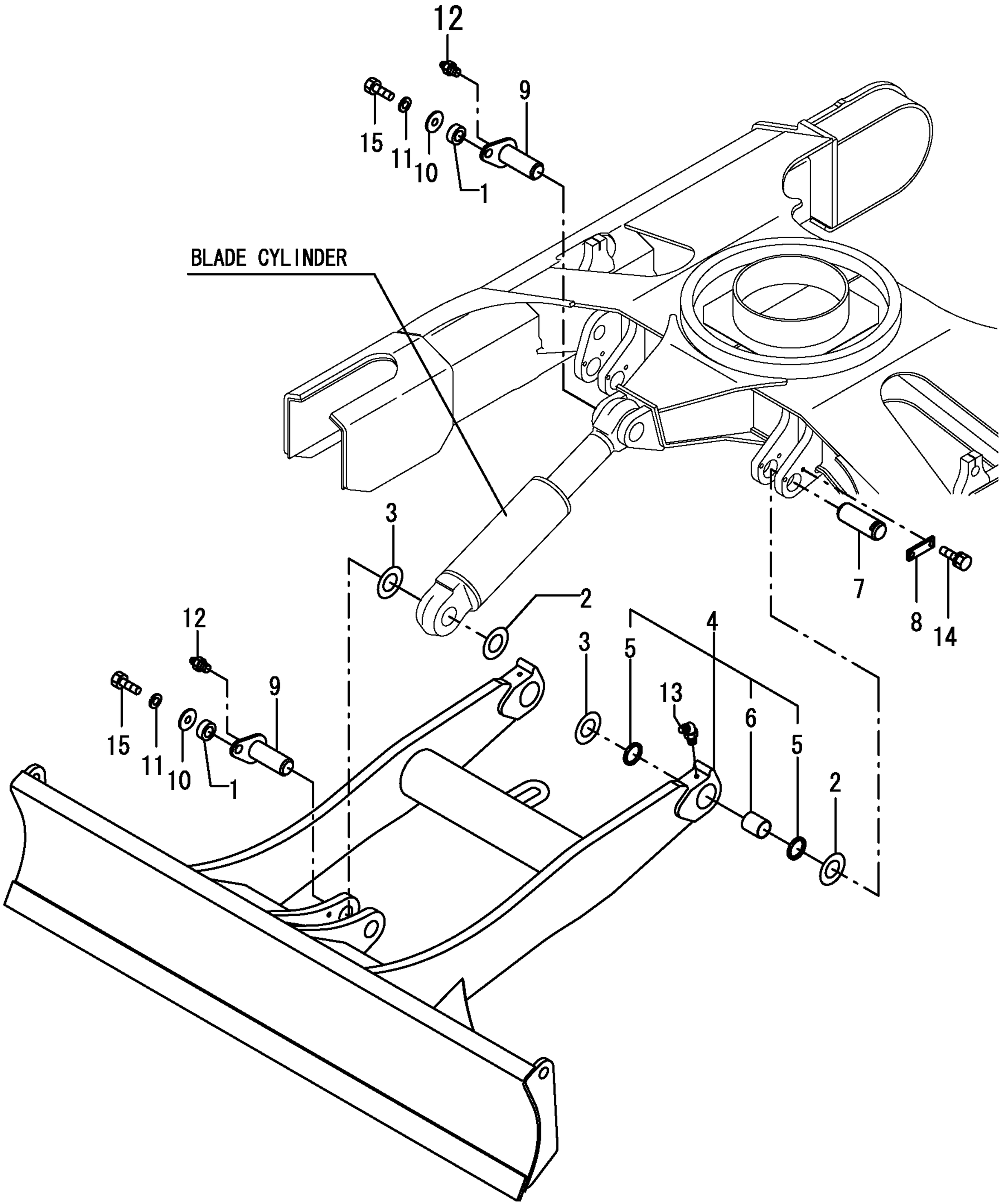

https://truckmanualshub.com/

```
[Info]
PcNo=Y00S4030
PcName=VIO75(EP)(B6640)
JpnUse=0
JpnSec1=
JpnSec2=
JpnSec3=
JpnPreface=0
EngUse=1
EngSec1=CONSTRUCTION
EngSec2=EXCAVATOR (ViO)
EngSec3=VIO
EngPreface=1
```