https://truckmanualshub.com/

CURTIS

INSTALLATION & OWNER'S MANUAL

Mahindra 1626
Cab with Heater (p/n: 1MA1626CA)
fits tractor models: 1626 (also fits 1526 with adapter)

While this cab kit was designed to fit on the vehicle(s) listed above, manufacturing tolerances and vehicle assembly may affect cab fitment. It is the responsibility of the cab installer to check all vehicle pedals and levers for full functionality and, as required, adjust the cab fitment to prevent any interference of the cab components with the travel of pedals or levers.

Shown with front windshield wiper
(comes standard with cab)

Available Options:
1. Front LED Work Lights (P/N: 9LEDW4)
2. Rear LED Work Lights (P/N: 9LEDW3)
3. Strobe Light (P/N: 9LEDS2)
4. Dome Light (P/N: 9LEDD14)
5. Side View Mirrors (P/N: 9PM5)
6. Rear View Mirror (P/N: 9PM3)
7. Rear Wiper (P/N: 9PWK8512F9-11A)
8. Seal Kit (P/N: 9SK4)
9. 1526 Adapter Kit (P/N: 1MA1526AK)

See video for heater and wiring installation tips.

Approximate Installation Time *
Experienced Dealer Technician – 7 Hours
Average Dealer Technician – 9 Hours
Do-It-Yourself – 11 Hours

(*=Including the heater installation)

Approximate Product Specifications
Floorboard to Roof Height: 59.5 inches
Weight: 315 lbs.
Cab Width: 49.375 inches

The contents of this envelope are the property of the owner. Leave with the owner when installation is complete.

Rev. F, 07/13/2020

TABLE OF CONTENTS

WARNINGS, TIPS, & REQUIRED TOOLS..... 3
CAB INSTALLATION..... 4-17
CAB FEATURES & OPERATION..... 18
CARE AND MAINTENANCE..... 19
SERVICE PARTS 20-22
OPTIONAL ACCESSORIES 23
TORQUE CHARTS.....24-25

WARNINGS, TIPS, & REQUIRED TOOLS

Curtis cabs feature an assembly of parts designed for your vehicle which require adjustment and alignment of components to accommodate vehicle variations and provide proper weather protection. For accurate installation, proper operation, and years of satisfaction, please read and understand the installation and owner's manual fully prior to installing the cab.

From all of us at Curtis, we thank you for choosing our product.

NOTICE

Curtis Cabs, blades and general accessories add additional weight to the base vehicle. All Curtis accessory weights are listed in product brochures. Deduct the accessory's total weight from the vehicle's rated capacity and never exceed the vehicle's rated capacity including driver and passenger.

WARNING ***Exposure to Carbon Monoxide can Cause illness, serious injury or death.*** *Never operate vehicle if suspicious of Carbon Monoxide. Inspect exhaust system for leaks monthly. Leaks can result from loose connections, corrosion, cracks or other damage to the exhaust manifold. If leaks are found, repair or replace exhaust system. Do not use vehicle until repair or replacement is complete.*

WARNING

Serious Injury or Death

	This cab enclosure does not provide protection from rollover or other accidents.
	This cab enclosure does not provide protection from flying objects including golf balls.
	This cab enclosure does not provide protection from lightning. When lightning threatens take cover and do not operate vehicle.

California Health and Safety Proposition 65 Warning: This product may contain chemicals known to the state of California to cause cancer and birth defects or other reproductive harm.

GENERAL INFORMATION BEFORE YOU START

HELPFUL HINTS:

- Refer to parts diagram found in the service parts section of this manual to help identify parts during the assembly process.
- To assist with the cab installation, leave all fasteners loose for later adjustment unless otherwise specified.
- Read and understand all instructions before beginning.
- Apply a silicone sealant to seal any minor gaps that may occur due to vehicle variations.
- Use caution to avoid damaging the factory installed threaded inserts or weld nuts. Begin the thread engagement by hand to avoid or correct potential cross threading.
- Make sure the areas where the supplied self-adhesive hook Velcro and seals will be applied are clean, dry and at room temperature for best adhesion.
- Before installing parts with factory installed rubber, make sure the rubber is fully installed onto the parts for proper fit and sealing.
- Plastic washers have been supplied to provide a weather seal under the heads of some exterior bolts. The plastic washer should be installed under each bolt head directly against the outside cab surface. Care should be taken not to over tighten the fasteners and damage the plastic washer.

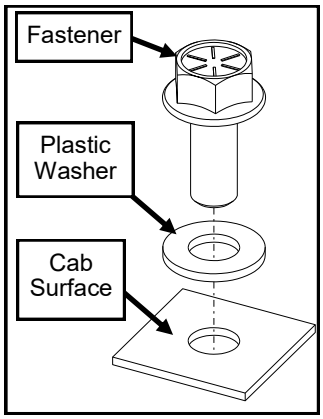

TOOLS REQUIRED:

- Set of Standard and Metric Sockets (3/8" Drive)
- 3/8" Drive Ratchet with extension
- Torque Wrench
- Set of Standard and Metric Open-End Wrenches
- Set of Standard and Metric Allen Wrenches
- #2 and #3 Phillips Head Screwdrivers
- Awl or Punch
- Drill/Driver
- #2 and #3 Phillips Head Bit
- Utility Knife
- Pair of Scissors
- Shears
- Grease
- Silicone Sealant
- Teflon Tape
- Tape Measure

CAB INSTALLATION

STEP 1: (VEHICLE PREP)

1.1 Remove and set aside both engine side covers.

1.2 Remove the main power fuse located on the top of the battery.

1.3 Remove the ROPS mounted tool box. Save for re-installation later.

1.4 Remove and set aside the upper ROPS tube and hardware.

1.5 Remove and set aside the fender grab handles.

1.6 Disconnect, remove, and set aside the tail lights and flashers. Be sure to mark left and right prior to removal.

Note the orientation of the tail lights. There is a drain on the bottom of the rubber gasket.

1.7 Remove the plastic fenders. Save the screws with washers shown in Figure 1.7 for each fender. The fender is slotted at the inner most screws, so just loosen the screws and re-tighten after fender removal. Discard the rest of the hardware, as the fenders will not be re-installed.

1.8 Remove and save the SMV sign, bracket and the Top Link hook for re-installation later.

1.9 Label each side of the rear wire harness and free it up from the factory wire ties. Re-route the harness to the inside of the tractor just behind the seat and in front of the fender cross brace. See Figure 1.9.

1.10 Remove both floorboard steps and set aside. Discard hardware. If the hydraulic lines are wire tied to the right side step, cut the ties and discard the rubber protector. If not, leave the wire tied protector alone.

1.11 Replace the ROPS screw shown in Figure 1.11 with the longer one supplied in the hardware kit. Re-use the split lock washer, but discard the original screw. Torque to 62-75 ft.-lbs. Repeat on right side with corresponding screw.

1.12 Re-attach the fender grab handles.

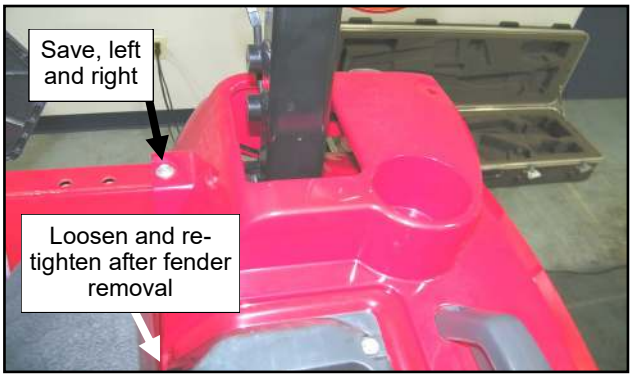

Fig. 1.7 (Save Screws with Washers, Left and Right)

Fig. 1.9 (Cut wire ties, re-route harness)

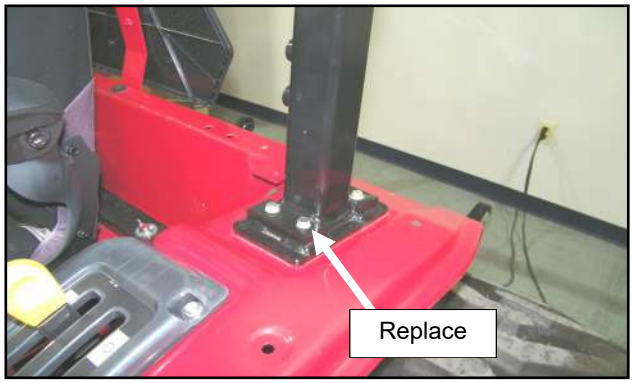

Fig. 1.11 (Replace ROPS Screw)

CAB INSTALLATION

STEP 2: (REAR LOWER CROSS)

2.1 Install the rear lower cross using the two saved screws from the plastic fenders. See Figure 2.1. Leave just loose enough for adjustment.

Tools required
10mm wrench or socket

Fig. 2.1 (Attach Rear Lower Cross)

STEP 3: (ROPS CLAMP BRACKETS)

3.1 Slide a ROPS clamp over the left flasher mounting tab and bolt on a ROPS bracket. See Figure 3.1.

Hardware Used	Qty
5/16-18 X 3/4 Hex Head Screw	4
5/16-18 Hex Nut	4

Tools required
1/2” wrench and socket

3.2 Repeat step 3.1 on the right side of the ROPS.

Fig. 3.1 (Attach ROPS Clamp Brackets)

CAB INSTALLATION

STEP 4: (SIDE FRAMES)

4.1 With assistance, remove the pre-assembled left door from the left side frame and set aside. Do not lose the brass washers on the hinge pins.

4.2 Pre-install a lower ROPS bracket to the left side frame. See Figure 4.2.

Hardware Used	Qty
5/16-18 X 3/4 Hex Head Screw	2
5/16-18 Hex Nut	2

Tools required
1/2" wrench and socket

4.3 Set the left side frame in place and loosely secure the lower ROPS bracket to the extended ROPS bolt installed in step 1.11, followed by two screws and nuts under the floor board. See Figures 4.3a-c.

Hardware Used	Qty
M12x24 Flat Washer	1
M12x1.25 Nut	1
5/16-18 X 3/4 Hex Head Screw	2
5/16-18 Hex Nut	2

Tools required
19mm wrench or socket
1/2" wrench and socket

4.4 Repeat steps 4.1-4.3 for the right side frame.

4.5 Tuck the right side floorboard rear rubber seal under the plastic loader control cover to close off any holes.

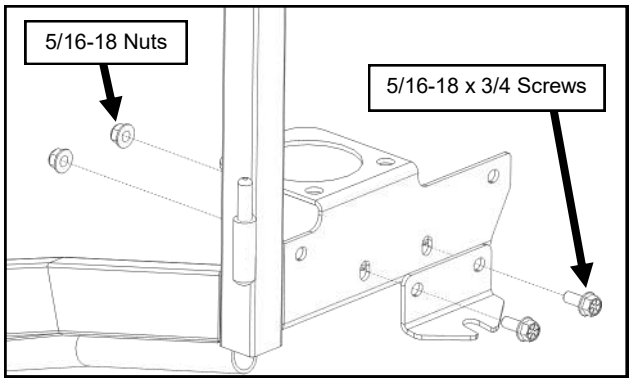

Fig. 4.2 (Pre-Assemble Bracket to Side Frame)

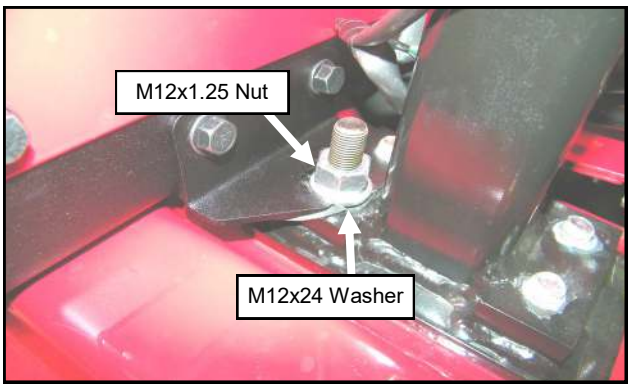

Fig. 4.3a (Attach Side Frame)

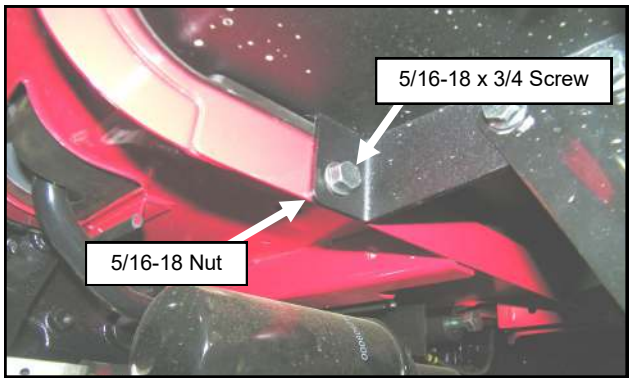

Fig. 4.3b (Attach Side Frame)

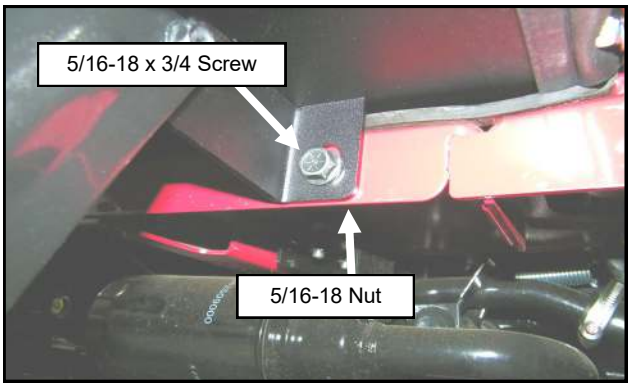

Fig. 4.3c (Attach Side Frame)

CAB INSTALLATION

STEP 5: (REAR LEGS)

5.1 Slide the left rear leg between the side frame, ROPS, and lower rear cross, and secure with hardware. See Figure 5.1.

Hardware Used	Qty
5/16-18 X 3/4 Hex Head Screw	9
5/16-18 Hex Nut	6

Tools required
1/2” wrench and socket

5.2 Repeat step 5.1 with the right rear leg.

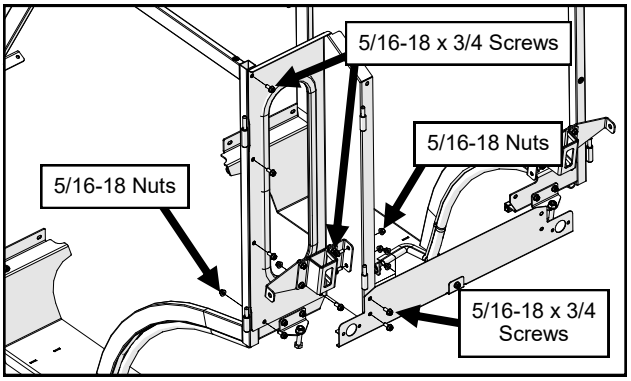

Fig. 5.1 (Attach Rear Leg)

STEP 6: (WINDSHIELD SUPPORT)

6.1 With assistance, hold the windshield support in place and attach with a screw in the top of each side frame. See Figure 6.1.

Hardware Used	Qty
5/16-18 X 3/4 Hex Head Screw	2

Tools required
1/2” wrench or socket

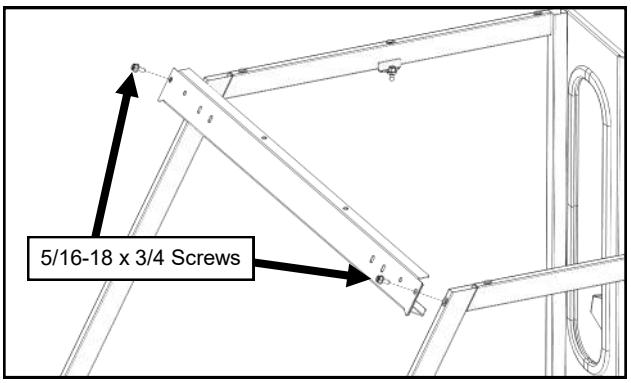

Fig. 6.1 (Attach Windshield Support)

STEP 7: (TEMPORARILY INSTALL SHEET METAL COWL)

7.1 With assistance, temporarily install the sheet metal cowl so that the wiring harness can be run and secured. See Figure 7.1.

Hardware Used	Qty
5/16-18 X 3/4 Hex Head Screw	2
5/16-18 Hex Nut	2

Tools required
1/2” wrench and socket

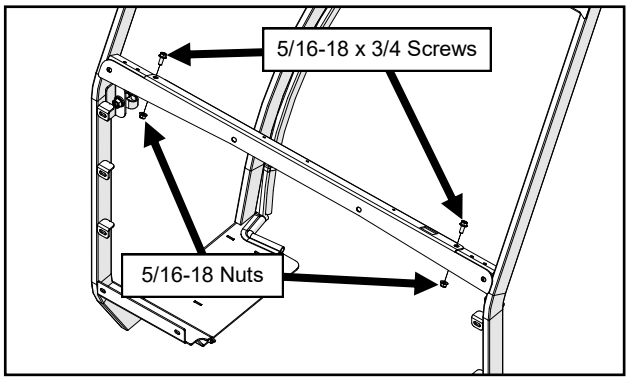

Fig. 7.1 (Temporarily Install Sheet Metal Cowl)

CAB INSTALLATION

STEP 8: (CAB WIRING)

8.1 Attach the main power wire harness to the top of the sheet metal cowl, about 6” from the end of the windshield wiper connector, using a P-clip and hardware. The connector end should be outside the cab, with the rest of the harness on the inside. See Figure 8.1.

Hardware Used	Qty
#10-32 x 1/2” Pan Head Screw	1
#10-32 Hex Nut	1

Tools required
#2 Phillips Screw Driver
3/8” Wrench or Socket.

8.2 Run the harness to the under side of the cowl and secure it with (2) more P-clips and hardware. See Figure 8.1.

Hardware Used	Qty
#10-32 x 1/2” Pan Head Screw	2
#10-32 Hex Nut	2

Tools required
#2 Phillips Screw Driver
3/8” Wrench or Socket.

8.3 Snap in the heater switch and connect the wire harness.

8.4 Run the wire harness over to and down the side frame through the 1/2” hole in the floorboard. Secure it in (3) places along the side frame using P-clips and self-drilling screws. See Figure 8.4.

Hardware Used	Qty
#10 x 3/4” Pan Head Self-Drill Screw	3

Tools required
#2 Phillips Bit
Drill/driver

8.5 Run the harness towards the engine bay and connect the black ground wire to the engine block near the alternator. See figure 8.5.

8.6 Locate the fuse harness (WH-GF). Make certain the fuse is installed in the fuse holder. Unbolt the main power cable attached to the alternator and re-secure with the ring terminal on the fuse harness. See Figure 8.5.

8.7 Connect the bullet terminals of the power harness and the fuse wiring harness. Coil the slack in the power harness and secure with a wire tie. See Figure 8.5. Double check that the wires are not pinched or near sharp or hot surfaces.

NOTE: At the installer’s discretion, wiring for accessories may also be installed into the engine compartment at this time.

8.8 Secure wires (with wire ties provided) away from any hot or moving engine components where it could melt or be pinched.

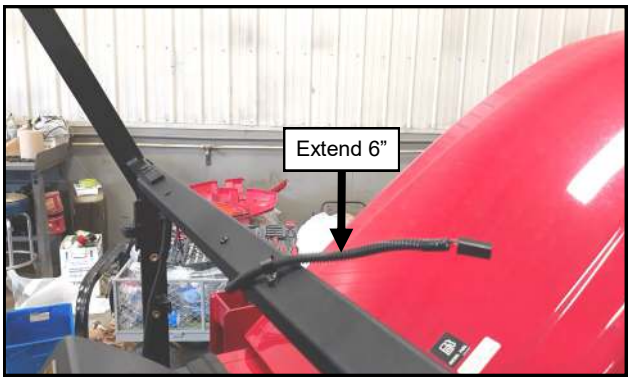

Fig. 8.1 (Attach Main Harness To Cowl)

Fig. 8.4 (Run Wire Harness Down Side Frame)

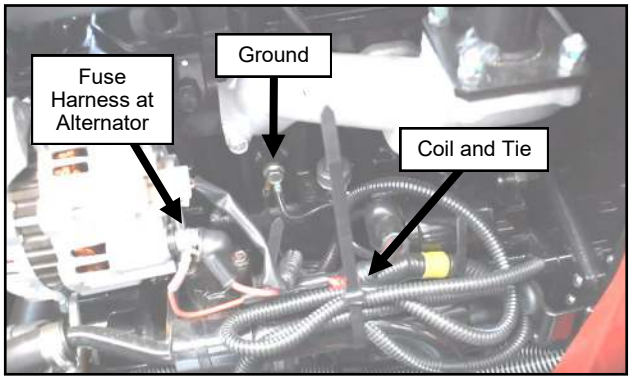

Fig. 8.5 (Connect Harness To Engine)

CAB INSTALLATION

STEP 9: (PRE-ASSEMBLE COWL)

NOTE: For Installation on a Mahindra 1526, use the vinyl filler from the adapter kit in place of the clear vinyl filler from the cab kit. Refer to the instructions with the adapter kit.

9.1 Using the painted sheet metal mounting flange as a template, mark and pierce holes in the vinyl filler. See Figure 9.1.

Tools required
Awl or Punch

CAUTION: If the clear cowl does not already have holes drilled in it for the vinyl filler, use the sheet metal mounting flange again as a template to mark and drill holes. Line up the inner edges of the flange to the top and side edges of the existing cutout in the cowl.

9.2 Pre-assemble the vinyl filler and mounting flange to the cowl. See Figure 9.2.

Hardware Used	Qty
#10-32 x 5/8” Screws	9
#10 Flat Washers	9
#10-32 Nuts	9

Tools required
#2 Phillips Bit or Screw Driver
3/8” Socket or Wrench

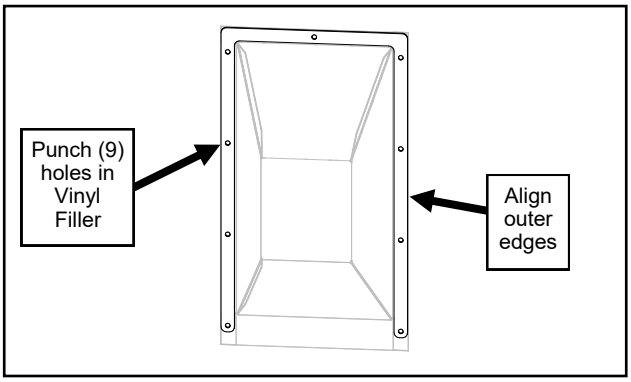

Fig. 9.1 (Punch Holes in Vinyl Filler)

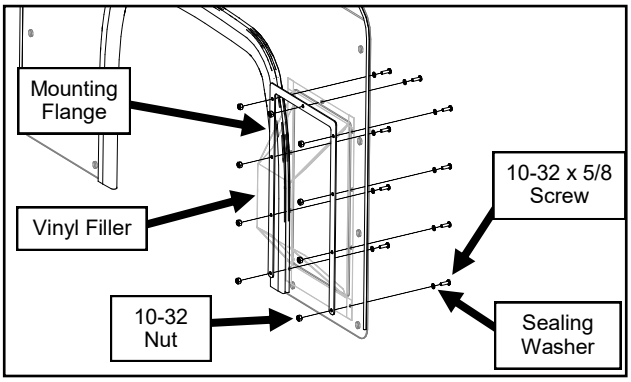

Fig. 9.2 (Pre-Assemble Vinyl Filler to Cowl)

STEP 10: (CLEAR PLASTIC COWL)

10.1 With assistance, slide the clear plastic cowl down over the vehicle, flexing it to go around behind the loader arm bracket. Loosely secure the lower (10) slots with fasteners. See Figure 10.1. The vinyl filler will sandwich between the plastic cowl and the floorboard at the bottom.

Hardware Used	Qty
5/16-18 X 3/4 Hex Head Screw	10
5/16” Sealing Washer	10
5/16-18 Hex Nut	10

Tools required
1/2” wrench and socket

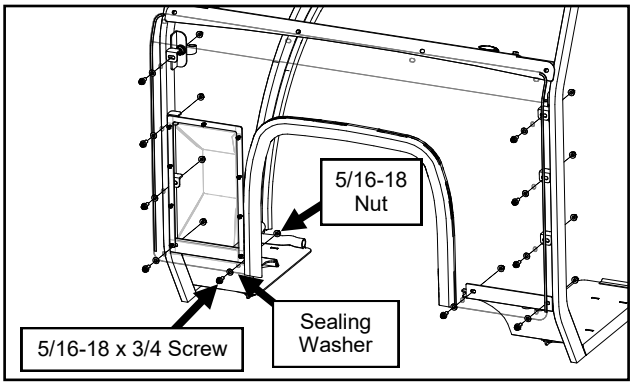

Fig. 10.1 (Install Clear Plastic Cowl)

STEP 11: (SHEET METAL COWL)

11.1 With assistance, remove the sheet metal cowl and re-install it on the outside of the clear plastic cowl, then flex both into place and re-secure. See Figure 11.1. Note: the sealing washers are for the 4 exterior screws.

Hardware Used	Qty
5/16-18 X 3/4 Hex Head Screw	6
5/16” Sealing Washer	4
5/16-18 Hex Nut	6

Tools required
1/2” wrench and socket

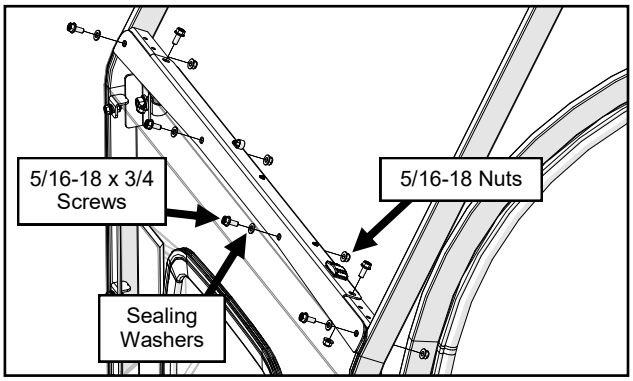

Fig. 11.1 (Install Sheet Metal Cowl)

CAB INSTALLATION

STEP 12: (UPPER REAR CROSS)

12.1 Set the upper rear cross on top of the rear legs and loosely secure. See Figure 12.1.

Hardware Used	Qty
5/16-18 x 3/4” Hex Head Screw	2
5/16-18 Hex Nut	2

Tools Required
1/2” Wrenches and/or Sockets

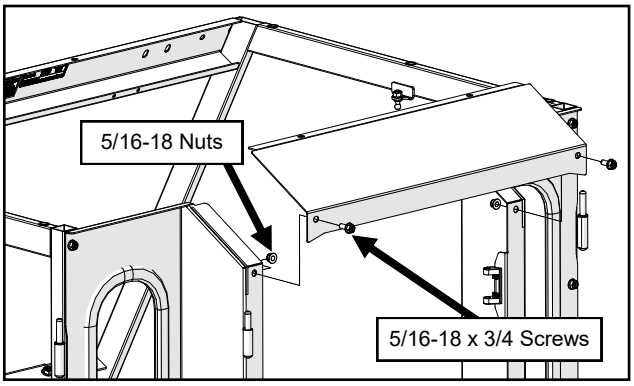

Fig. 12.1 (Install Upper Rear Cross)

STEP 13: (WINDSHIELD)

13.1 Check the windshield support for squareness to the side frames and tighten the two screws to 20 ft.-lbs.

13.2 With assistance, set the windshield up to the side frames and secure it to the windshield support using the hinge spacers and hardware. See Figure 13.2. Leave hardware loose.

Hardware Used	Qty
5/16-18 x 1.5” Flat Head Screw	4
5/16-18 Hex Nut	4

Tools required
#3 Phillips screw driver
½” wrench or socket.

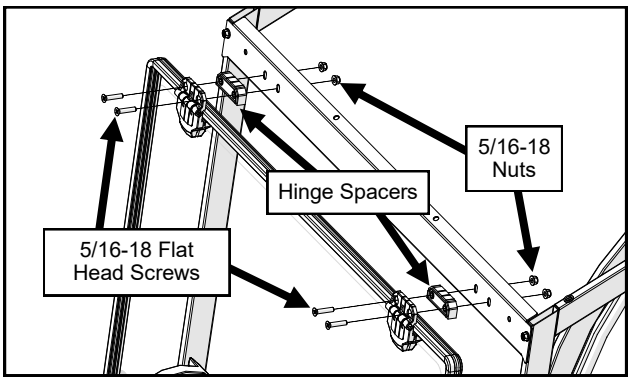

Fig. 13.2 (Attach Windshield)

13.3 Secure the windshield latches to the side frames with the latches open, and tighten latch hardware. See Figure 13.3.

Hardware Used	Qty
¼-20 x 5/8” Hex Head Screw	4
¼-20 Hex Nut	4

Tools required
3/8” wrench/socket
7/16” wrench/socket

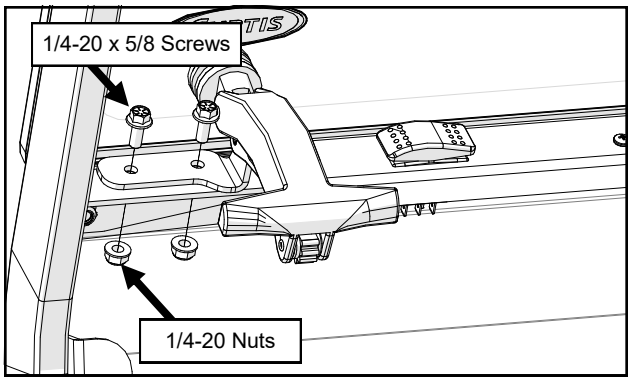

Fig. 13.3 (Secure Windshield Latches)

13.4 Close the windshield while lifting up on the bottom edge. Tighten hinge hardware. **Caution: The windshield hinges are plastic components. Do not overtighten the flat head screws. Torque to 7 ft.-lbs. max.**

13.5 Ensure the windshield latches function properly and the windshield pivots open.

13.6 Remove the over tightening caution decal from the top of the windshield.

STEP 14: (WINDSHIELD WIPER MOTOR)

14.1 Mount the wiper motor to the windshield. See Figure 14.1. Make sure the wires are above the wiper motor shaft to prevent pinching the wires when the windshield is opened and closed, then connect to the wire harness.

NOTE: Do not install the wiper arm and blade at this time. Once all the wiring is complete and power is restored, it can be turned on and off to ensure that the wiper arm will be parked in the correct position once it is attached at a later step.

14.2 Re-check the windshield pop-out function. The wiper motor should easily clear the cowl, but if not, loosen the windshield hinges and raise the windshield to gain some clearance.

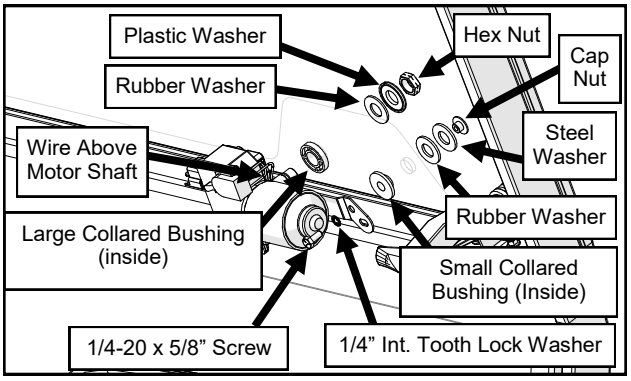

Fig. 14.1 (Windshield Wiper Motor)

CAB INSTALLATION

STEP 15: (ROOF)

15.1 Prep the roof for installation by piercing the headliner below the top mounting slots. Use a screwdriver to poke holes through the headliner from the headliner side up through the hole in the roof to avoid having the headliner pull away from its glued surface.

15.2 Orient the roof so that the two work light holes are towards the front of the vehicle. With assistance, set the roof on top of the cab. Loosely secure with sealing washers on the (10) screws through the top of the roof. See Figure 15.2.

Hardware Used	Qty
5/16-18 x 3/4” Hex Head Screw	10
5/16” Sealing Washer	10
5/16-18 Hex Nut	4

Tools required
1/2” Wrenches and/or Sockets

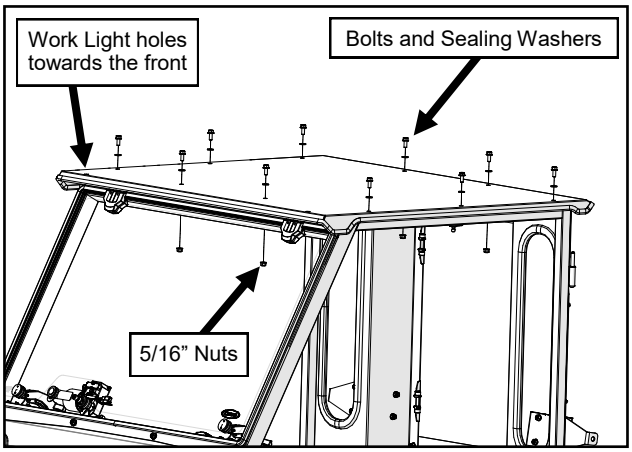

Fig. 15.2 (Install Roof)

STEP 16: (REAR WINDOW)

16.1 Measure the back of the rear legs, outside to outside, and adjust the width to 25.25”. Measure corner to corner for squareness, and tighten the (6) sets of screws and nuts to lock in this width. See figure 16.1

16.2 Grease the hinge pins for the rear window, and slide on greased brass washers (one washer per pin). See Figure 16.2.

16.3 Hang the rear window on the hinges.

16.4 Connect the window latches to the right rear leg by depressing the tabs on the latch and inserting into the receivers mounted on the rear leg. Close and check the alignment of the window. If off, check measurements and re-align the rear legs. Tighten the hinge hardware to 7 ft.-lbs. Verify smooth operation of the latches.

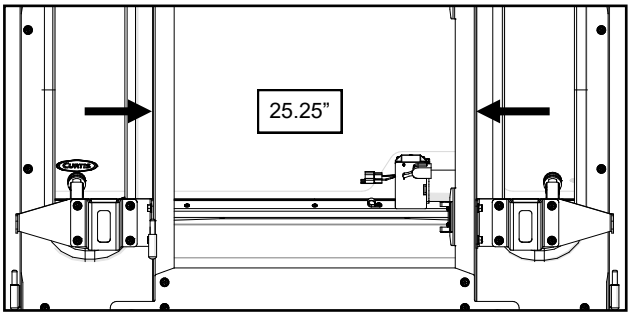

Fig. 16.1 (Measure Rear Legs Left to Right)

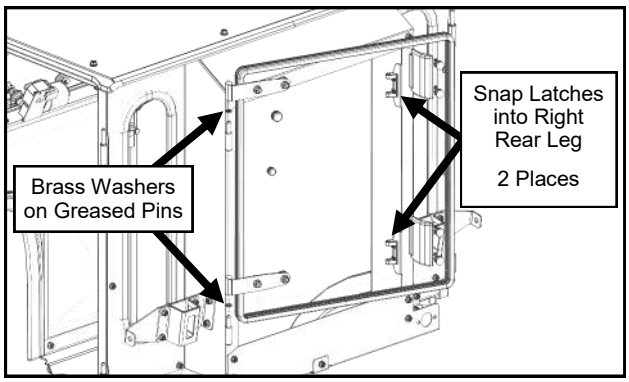

Fig. 16.2 (Hang Rear Window)

STEP 17: (TIGHTEN HARDWARE)

17.1 Tighten all hardware at this time, using the torque values given below.

Each side frame can be pushed inward at the back to close any gaps along the fender contour before tightening hardware.

For 5/16” bolts that thread into factory installed threaded inserts in the side frames without plastic washers, use 20 ft.-lbs.

For 5/16” bolts that use plastic washers, use only 12.5 ft.-lbs.

For the remaining 5/16” bolts (the vast majority on the cab) that thread into hex nuts, use 28 ft.-lbs.

For all other bolt sizes, reference the torque tables at the end of the manual.

CAB INSTALLATION

STEP 18: (FLOORBOARD STEPS)

18.1 Install a floorboard step onto the brackets below the left side frame floorboard. See Figure 18.1. Tighten hardware.

Hardware Used	Qty
5/16-18 X 3/4 Hex Head Screw	4
5/16-18 Hex Nut	4

Tools required
1/2" wrench and socket

18.2 Repeat step 18.1 on the right side.

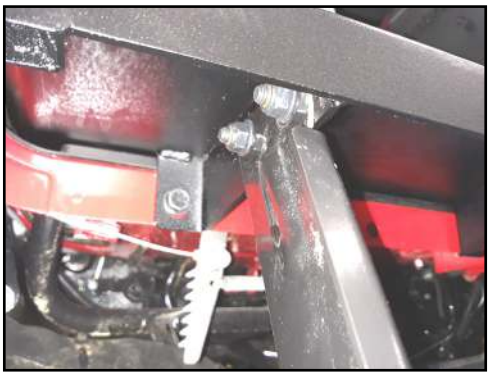

Fig. 18.1 (Install Left Floorboard Step)

STEP 19: (HEATER)

19.1 Slide the heater bracket between the harness and left side frame and attach. See Figure 19.1. Tighten hardware.

Hardware Used	Qty
5/16-18 x 3/4" Hex Head Screw	2

Tools required
½" socket with extension

19.2 Attach the heater to the heater bracket by removing and re-using the screws on the side of the heater. Tighten hardware.

Tools needed
#2 Phillips Screw driver.

19.3 Connect the heater connectors to the main cab wiring harness. Cover any visible wires with the supplied 1/2" wire loom.

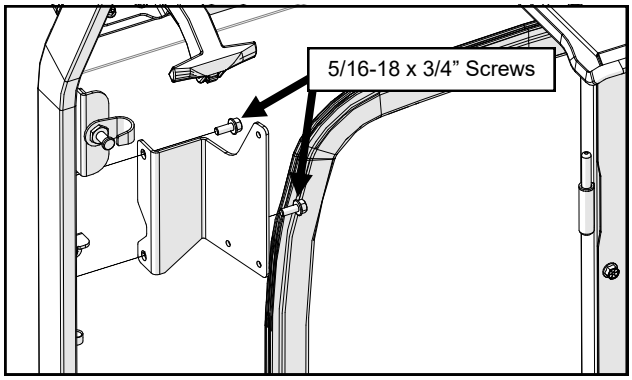

Fig. 19.1 (Install Heater Bracket to A-Pillar)

STEP 20: (HEATER PLUMBING)

*** CAUTION * To avoid injury caused by hot engine coolant, make sure the engine is completely cooled down before beginning plumbing of auxiliary heater.**

20.1 From inside the cab, install both ¾" snap bushings down into the large holes in the left floorboard. Feed both ends of the 5/8" diameter hose up through the bushings to the inside of the cab, connect them to the nipples on the heater, and secure them with 1" hose clamps. See Figure 20.1.

20.2 Run the rest of the hose, as if it were a stacked pair of hoses, along the left side of the engine, then up and over the radiator. Make sure the heater hose is not too tight or kinked and secure in place with 2 plastic cable ties as shown in fig. 20.2. **CAUTION: make sure the heater hoses are not too close to any part of the exhaust system.**

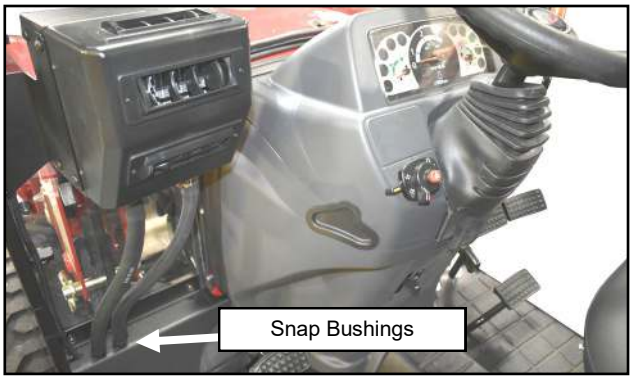

Fig. 20.1 (Snap Bushings and Heater Hose)

Fig. 20.2 (Run Hose Through Engine Bay)

CAB INSTALLATION

STEP 20: (HEATER PLUMBING CONTINUED)

20.3 Run one leg of the hose out and around the air intake tube and down to the lower radiator hose. Make sure the hose has enough slack throughout its run across the radiator so that it will not contact anything sharp above or below, and cut the leg of hose to length at the lower radiator hose. See Figure 20.3.

20.4 Place a clean drain pan under the radiator hose, cut the hose in the middle as shown in Figure 20.3, and let the coolant drain into the pan.

20.5 Place the two 1.5” hose clamps on either side of the cut lower radiator hose and install the T-Fitting provided. Place a 1” hose clamp on the 5/8” hose and attach to the T-Fitting as well. See Figure 20.5. Tighten the hose clamps.

20.6 Remove the plug from the bottom of the thermostat housing, transfer the sealing washer to the provided hose barb nipple, and install and tighten onto the engine. See Figure 20.6.

20.7 Run the remaining leg of hose around the outside of the coolant overflow tank, between the tank and the air intake tube, and over to the hose barb. Cut the hose to length at the hose barb, and install it with a hose clamp. See Figure 20.6.

20.8 Cut the hose that was run to the hose barb on the thermostat housing and install the provided shut-off valve with two 1” hose clamps. The location is not important, but on top of the radiator is recommended. See Figure 20.8.

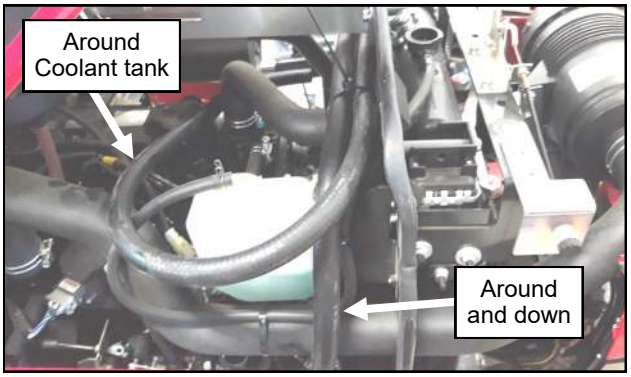

Figure 20.3 (Right Side of Engine Bay)

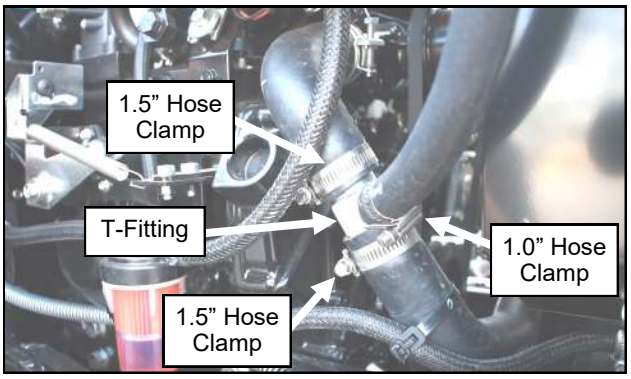

Figure 20.5 (Install T-Fitting in Lower Hose)

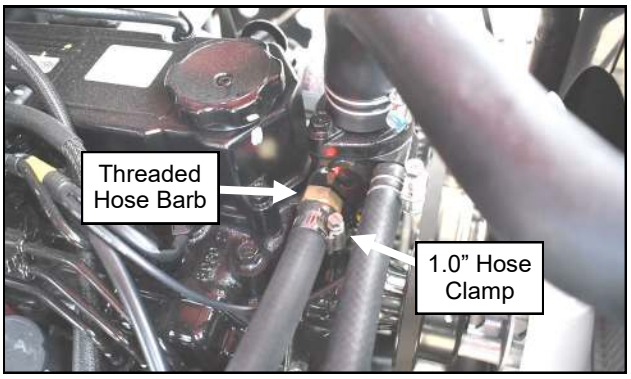

Figure 20.6 (Install Threaded Hose Barb Nipple)

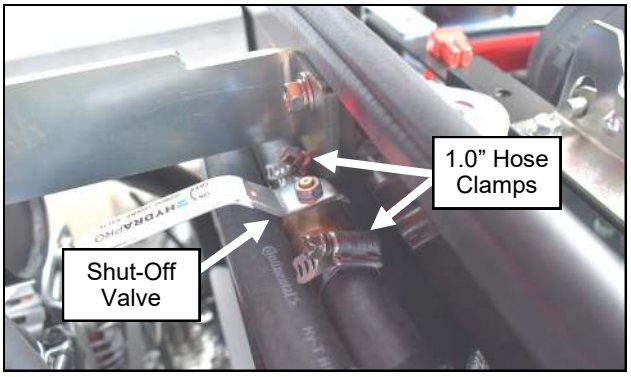

Figure 20.8 (Install Shut-Off Valve)

CAB INSTALLATION

STEP 21: (FINISH HEATER)

21.1 Re-install the main power fuse at the battery.

21.2 Refill the cooling system. Start the tractor and inspect coolant system for leaks.

21.3 With the tractor running, check the heater hoses and make sure they get warm. If not, remove the heater from its mount and let hang from the hoses as low as possible. If the heater and hoses still do not get warm, temporarily put a clamp on the upper radiator hose to force coolant through the heater. **Warning:** To avoid engine damage, remove the clamp as soon as heater gets warm. Reattach heater to the bracket. Once complete, let the engine cool, check the coolant level, and top off coolant if required.

21.4 Apply the provided 6" length of Trim-Lok to the left engine cover. See Figure 21.4.

21.5 Re-install both engine covers.

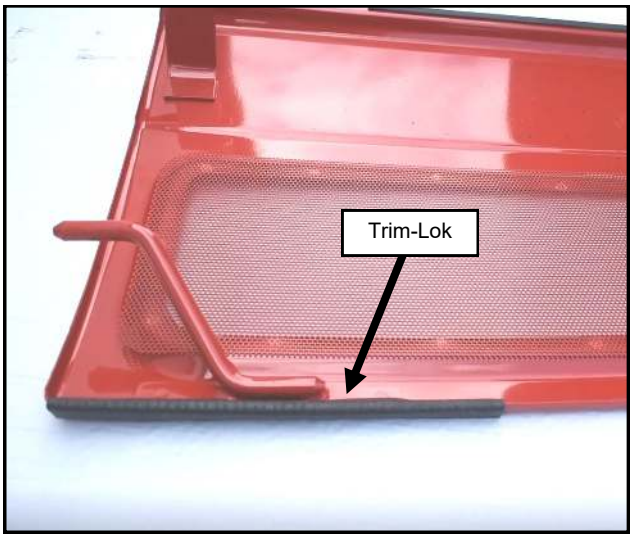

Fig. 21.4 (Left Engine Cover Trim-Lok)

STEP 22: (FINISH WIPER)

22.1 Turn on the wiper motor briefly, then turn back off. This will make sure the motor shaft is in the correct parked position.

22.2 Pre-assemble the wiper arm and wiper blade.

22.3 Install the wiper arm onto the wiper motor so that the wiper is horizontal. See Figure 22.3. Tighten the Allen Screws.

Tools required
2.5mm Allen Wrench

22.4 Adjust the length of the wiper arm as long as possible while still clearing the outer cap nut for the windshield latches. Turn on the wiper to check proper operation.

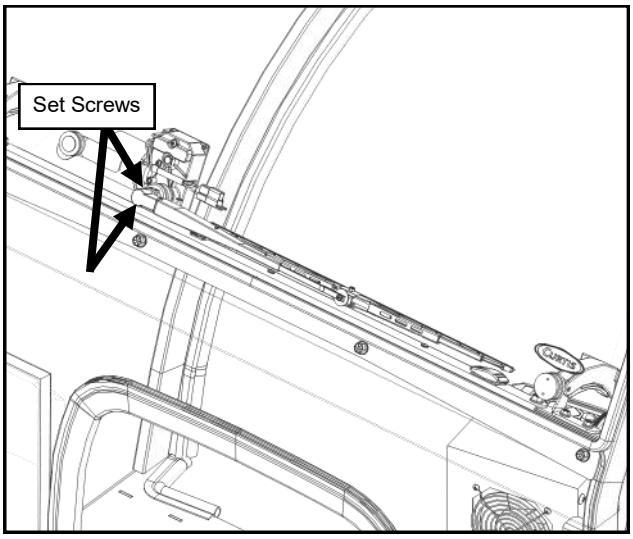

Fig. 22.3 (Wiper Arm and Blade)

STEP 23: (REAR LIGHTS)

NOTE: If the vehicle will be driven on the road, a SMV sign or decal (not included) must be provided.

23.1 Mount the left flasher to the new location on the ROPS clamp, and mount the left brake light to the new location on the lower cross panel. Make sure the drain hole on the brake light gasket is on the bottom. See Figure 23.1.

23.2 Run the left branch of the rear light wiring harness from under the seat inside the cab, under the left rear leg, in front of the ROPS, and connect to the flasher and brake lights.

23.3 Repeat steps 23.1-23.2 on the right side.

23.4 Secure the wiring harness as necessary to prevent any damage from adjusting the seat position.

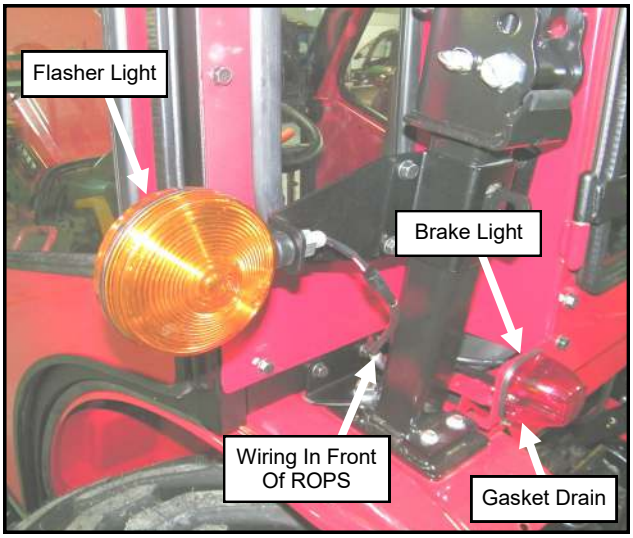

Fig. 23.1 (Mount Rear Lights)

CAB INSTALLATION

STEP 24: (UNDER SEAT FILLER)

24.1 Pre-install the supplied Velcro to the under seat filler. Leave the release tape on until the filler is in place.

24.2 Tip the seat forward and set the filler in place. The part of the filler that is under the seat is symmetrical and can be centered on the vehicle. Do not cover the information decals under the seat.

24.3 The back of the filler goes across the bottom of the lower rear panel. See Figures 24.3a and 24.3b. There are notches on the filler that correspond to the rear leg to side frame mounting hardware.

24.4 Slide the slits in the filler around the control levers on each fender and adhere. On the left side, the filler goes under the seat belt, over the PTO controls, and notches around the transmission lever. On the right side, the filler also goes under the seat belt, and notches around the 3 point hitch lever. See Figures 24.4a and 24.4b.

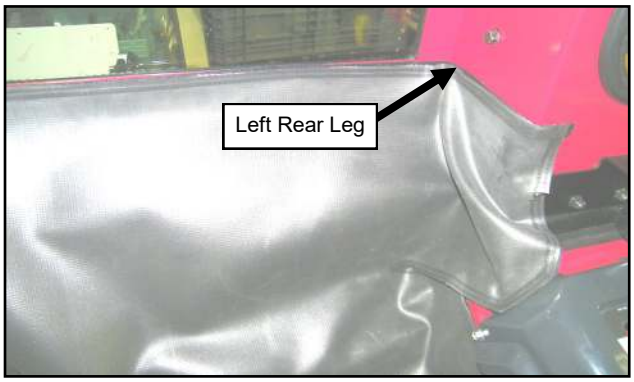

Fig. 24.3a (Install Under Seat Filler)

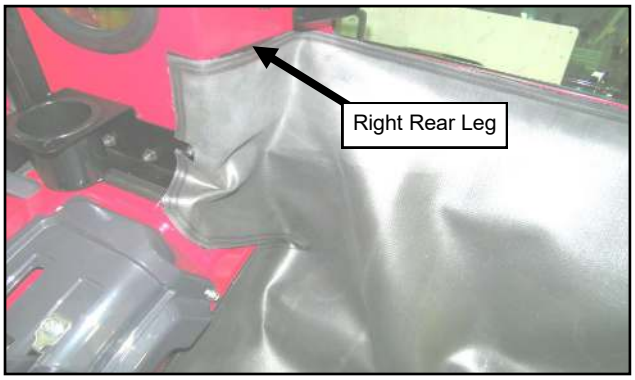

Fig. 24.3b (Install Under Seat Filler)

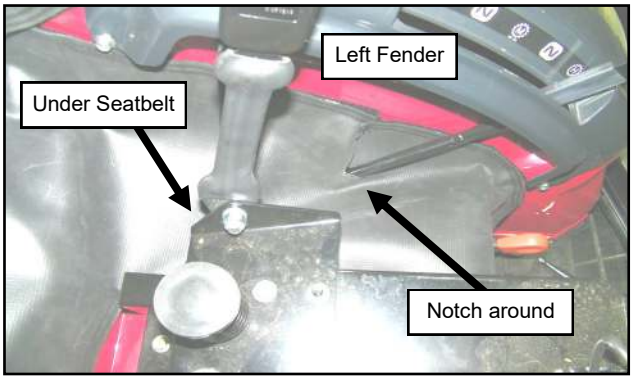

Fig. 24.4a (Install Under Seat Filler)

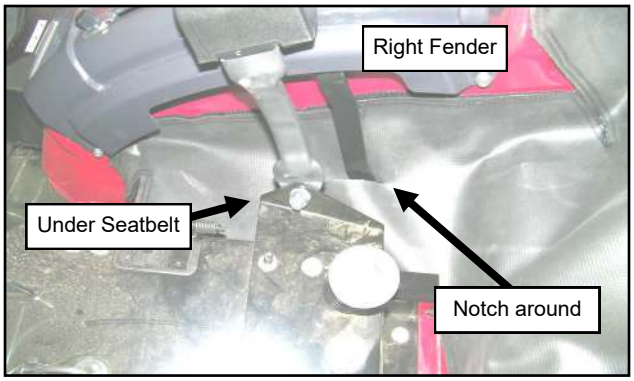

Fig. 24.4b (Install Under Seat Filler)

CAB INSTALLATION

STEP 25: (DOORS)

25.1 Install the supplied brass washers (one washer per pin) onto the hinge pins on the left side and then apply grease to the pins.

25.2 Loosen the door hinges to allow for adjustment later. Hang the left door on the hinges. While lifting up and forward on the door handle, line up the door latch with the striker pin and carefully attempt to latch. You should be able to hear 2 clicks as you slowly engage the latch on the pin. If the latch is too far forward or back to latch on the pin, adjust as shown. See Figures 25.2a through 25.2c. Then retighten and latch.

25.3 Stand back and examine the alignment of the door with the roof and the A-pillar. You can adjust this by moving the striker pin up or down as shown to help with alignment. *TIP: In the final step, the front of the door will drop a small amount the first time you open it. Set the front of the door a little bit higher so it aligns properly.* Adjust as necessary until you are happy with the alignment. Have an assistant sit inside the cab and once more carefully close the door like you did in step 25.2. Work with the assistant and tighten the hinge bracket bolts.

25.4 Open the door and check for smooth operation of the latch. As noted in step 25.3, the door will likely drop a little bit at the front and the striker pin will need to be adjusted down accordingly. Also make sure the door seal is making contact along the perimeter of the door and the latch clicks twice when closing. If necessary, adjust the striker in or out to achieve this.

25.5 With the door open, attach a gas strut to the ball studs on the side frame and door. Make sure the quick release end is on the side frame so that the gas strut stays with the door if removed for ventilation.

25.6 Repeat steps 25.1 through 25.5 for the right door.

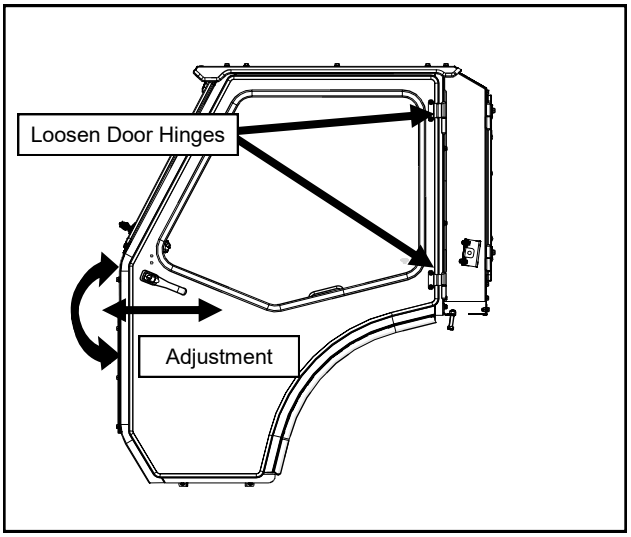

Fig. 25.2a (Door Hinge Adjustment)

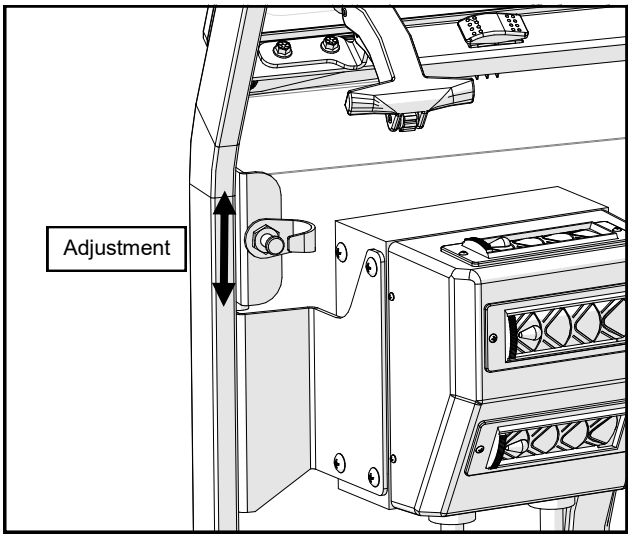

Fig. 25.2b (Striker Pin Adjustment)

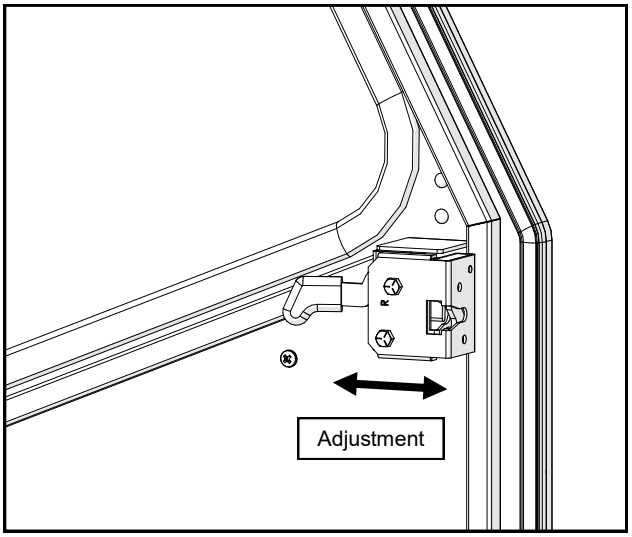

Fig. 25.2c (Door Latch Adjustment)

CAB INSTALLATION

STEP 26: (ACCESSORIES/PLUGS/CUP HOLDER)

26.1 If installing accessories, please do so now. If not, use the supplied plugs to fill any exposed holes. See Figure 26.1.

26.2 Install both cup holders into the rear of the side frames by just dropping them in place. See Figure 26.2.

26.3 Install the SMV Relocation Bracket to the rear of the tractor, using the two saved screws, in place of the SMV sign. See Figure 26.3. Install the SMV sign, bracket and Top Link Hook to the relocation bracket using two 5/16 x 3/4" screws and nuts.

Hardware Used	Qty
5/16-18 x 3/4" Hex Head Screw	2
5/16-18 Hex Nut	2

Tools required
1/2" Wrenches and/or Sockets

26.4 Install the Toolbox Relocation Bracket to the ROPS using the two saved screws from the Toolbox. Install the ROPS Mounted Toolbox to the relocation bracket using two 5/16 x 3/4" screws and nuts. per Figure 26.4.

Hardware Used	Qty
5/16-18 x 3/4" Hex Head Screw	2
5/16-18 Hex Nut	2

Tools required
1/2" Wrenches and/or Sockets

26.5 Optional Rear Wiper Note:

For easier wiper motor harness disconnection, cut the main wiring harness connector off a few inches from the end and create a jumper harness with it using bullet connectors. **Do not cut the connector off the wiper motor**.

Strip all the wires, crimp a male bullet connector onto the ground (black) wire of the main wire harness and a female bullet connector on the positive (red) wire.

Reverse the male and female bullet connectors on the new jumper wire harness so that the male bullet connector is on the positive (red) wire and the female bullet connector is on the ground (black) wire.

STEP 27: (FINISHING TOUCHES)

27.1 Re-install the upper ROPS tube.

27.2 Use the red dot decals included with the cab to cover any unused holes made visible by the removal of the tractor fenders

27.3 Due to the nature of the packaging materials used for shipping this product, the components of the cab system may have dust on their surfaces upon removal from the packaging. It is recommended that after completion of the cab installation, the cab and vehicle are washed thoroughly to eliminate any dust or contaminants. See the Care and Maintenance section at the back of this manual for critical information on cleaning the cab.

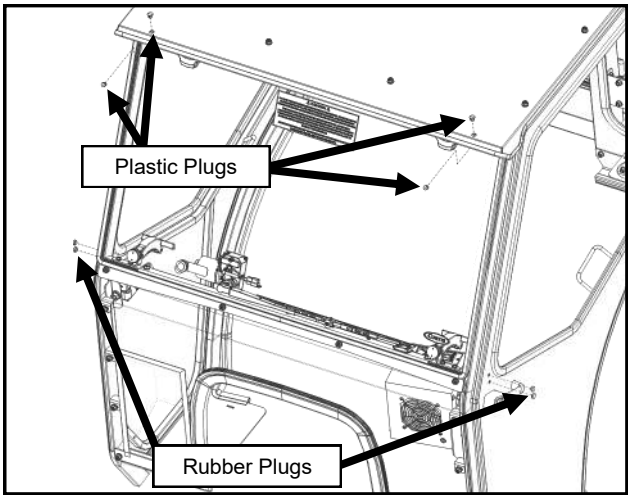

Fig. 26.1 (Install Plugs)

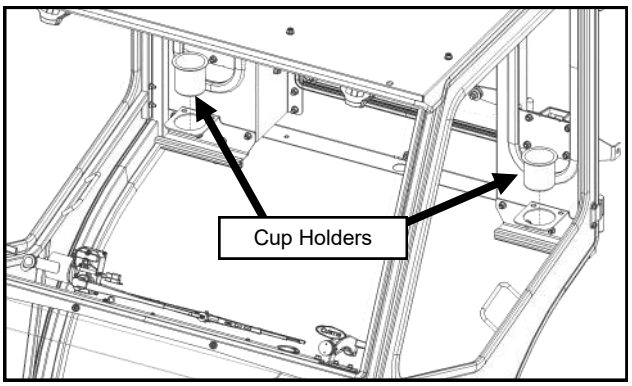

Fig. 26.2 (Install Cup Holders)

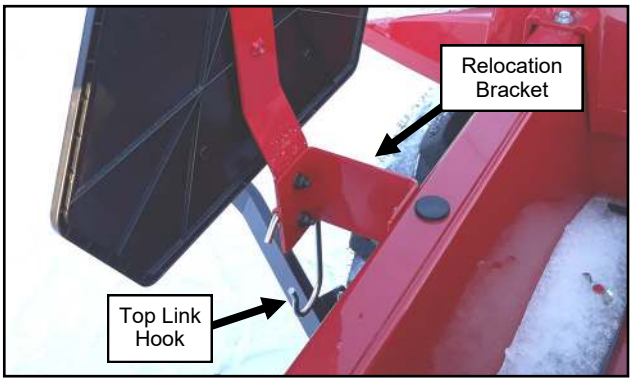

Fig. 26.3 (Install SMV Sign and Top Link Hook)

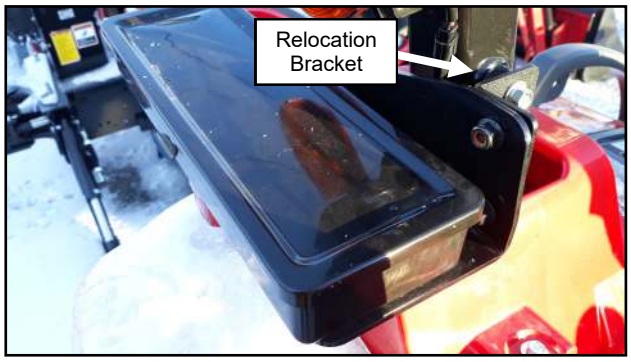

Fig. 26.4 (Install ROPS Mounted Toolbox)

CAB FEATURES & OPERATION

POP-OUT WINDSHIELD

Your 1626 cab comes equipped with a pop-out windshield for ventilation. To open the windshield, simply lift up on both of the pop-out latches and rotate until the latches rest in the over -center position.

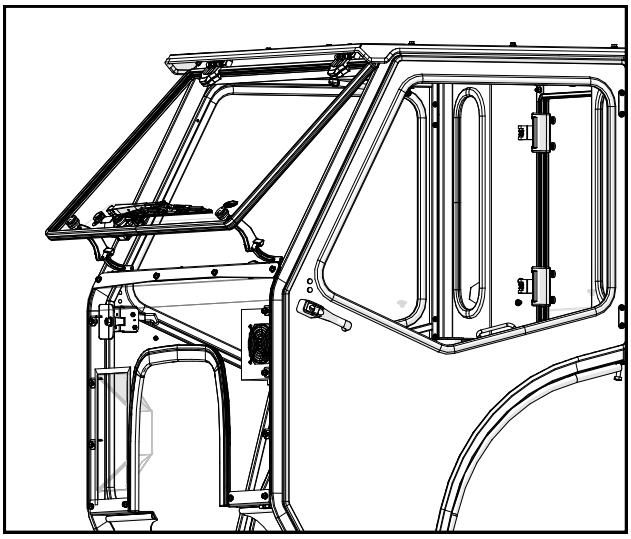

Pop-Out Windshield

LIFT-OFF DOORS

For added ventilation, the doors on the 1626 cab lift off in seconds without tools.

To lift off:

1. Disconnect the gas strut from the side frame by sliding the quick release lever and pulling the strut down.
2. Rotate the doors 90° to the cab and lift. Also, remove the hinge washers and store in a plastic bag.

Store the doors in a safe location to prevent damage.

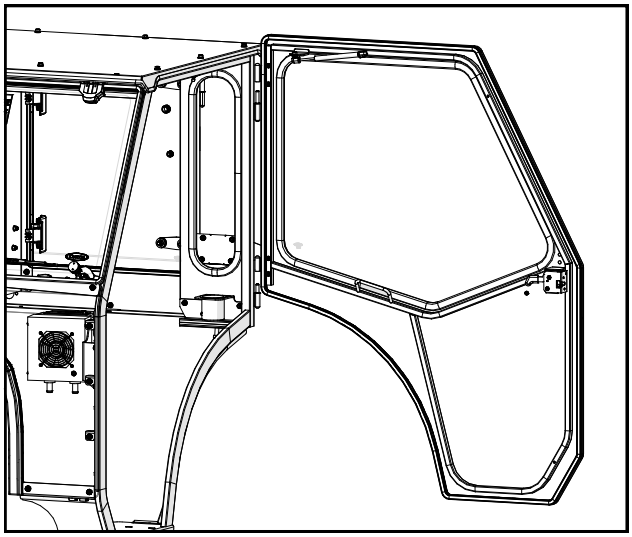

Lift-Off Doors

REMOVABLE REAR WINDOW

The rear window can also be removed for added ventilation.

To remove the rear window:

1. Open both window latches and disconnect from right rear leg with tabs on latch. Open the window taking care not to let the window open into the ROPS or damage may occur.
2. From outside of the cab, lift up on the rear window and slide off the hinges. Remove the hinge washers and store in a plastic bag.

Store the rear window in a safe location to prevent damage.

To reinstall the rear window, reinstall the hinge washers, align the hinges with the pins and drop into place. Re-attach the latches to the rear leg.

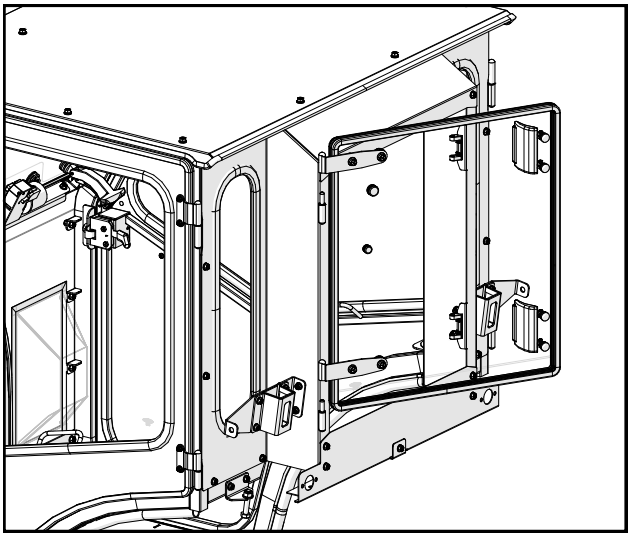

Removable Rear Window

CARE AND MAINTENANCE

- Re-apply lubrication (preferably grease) periodically as needed to the door striker pins, door latch assemblies, and the door hinges.
- Check and tighten hardware after 40 hours of operation. Periodically inspect and tighten hardware for the remainder of the unit's life.
- Wash the painted surfaces of the cab with commercial automotive cleaning products.
- Clean glass windows with glass cleaner. *Note: Some windows on the cab are acrylic.* **DO NOT** clean acrylic windows with harsh chemicals. It will damage the plastic. Mild soap and water should be used on all acrylic windows.
- Vinyl components should be washed with a mild solution of warm soapy water.

MAHINDRA 1626 CAB SERVICE PARTS

ROOF ASSEMBLY
P/N: 8SV-101-00040

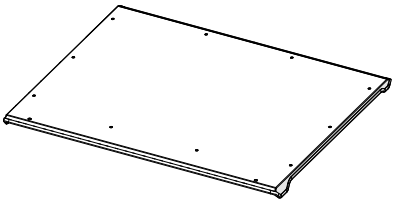

WINDSHIELD ASSEMBLY, 45.75” X 27”
P/N: 8SV-102-00022

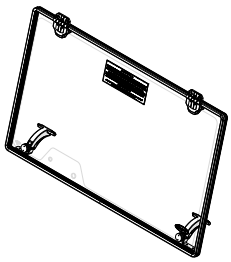

WINDSHIELD SUPPORT
P/N: 8SV-103-00014

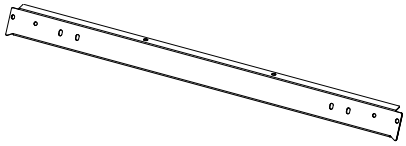

PLASTIC COWL ASSEMBLY
P/N: 8SV-105-00020

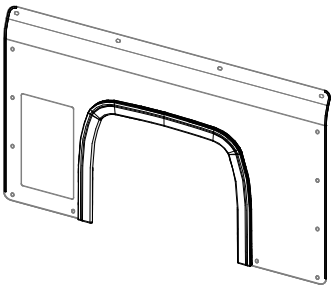

GLASS REAR PANEL LIFT OFF,
26.75 X 23.25, 3/16" THICK
P/N: 8SV-106-00023

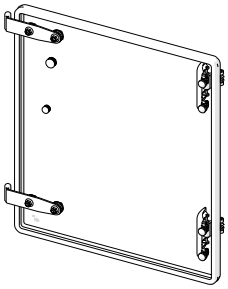

DOOR ASSEMBLY, LEFT
P/N: 8SV-107-00033-L

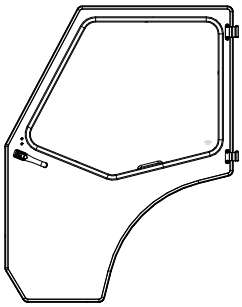

DOOR ASSEMBLY, RIGHT
P/N: 8SV-107-00033-R

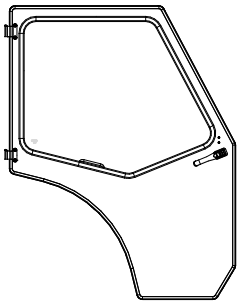

REAR LEG ASSEMBLY, LEFT
P/N: 8SV-108-00017-L

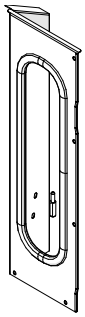

REAR LEG ASSEMBLY, RIGHT
P/N: 8SV-108-00017-R

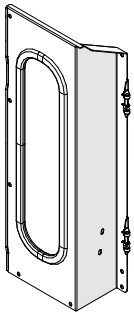

SIDE FRAME ASSEMBLY, LEFT
P/N: 8SV-109-00015-L

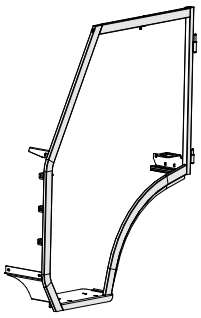

SIDE FRAME ASSEMBLY, RIGHT
P/N: 8SV-109-00015-R

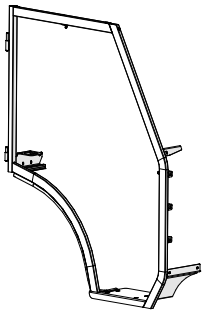

ROPS BRACKET ASSEMBLY
P/N: 8SV-110-00056

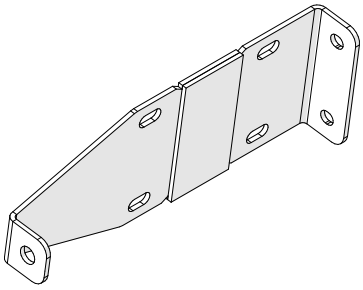

MAHINDRA 1626 CAB SERVICE PARTS

ROPS CLAMP ASSEMBLY
P/N: 8SV-110-00057

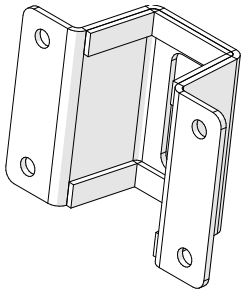

UPPER REAR PANEL
P/N: 8SV-111-00024

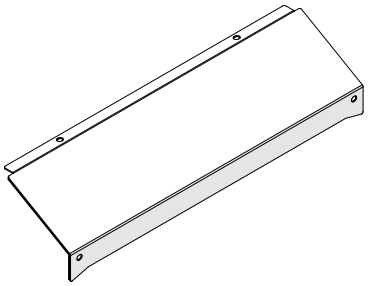

UNDERSEAT FILLER ASSEMBLY
P/N: 8SV-112-00036

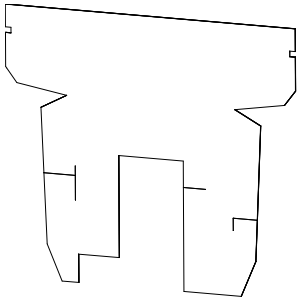

METAL COWL
P/N: 8SV-SM-01285

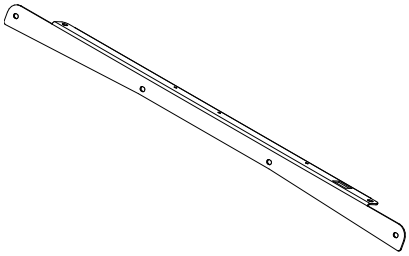

DOOR WINDOW WITH RUBBER
P/N: 8SV-9GL-00054

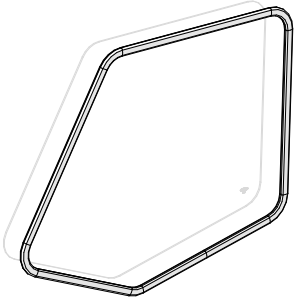

REAR LOWER CROSS
P/N: 8SV-SM-01256

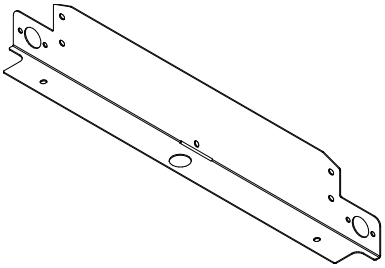

LOWER ROPS BRACKET
P/N: 8SV-SM-01262

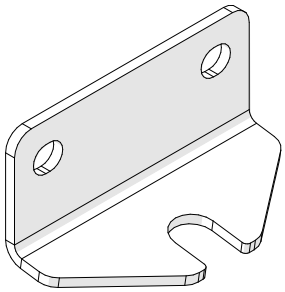

GLASS HINGE SLEEVE WITH MOUNTING HARDWARE
P/N: 8SV-PL-00021

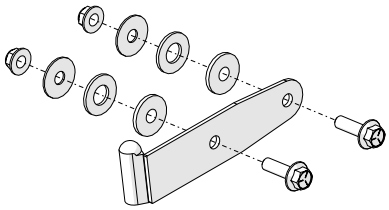

HEATER BRACKET
P/N: 8SV-SM-01275

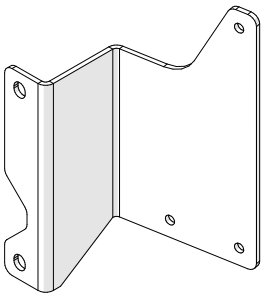

COWL VINYL FILLER
P/N: 8SV-V-00032

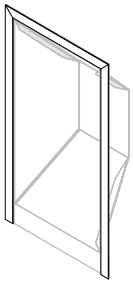

VINYL FILLER MOUNTING BRACKET
P/N: 8SV-SM-01472

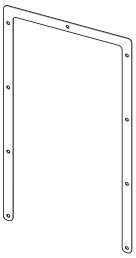

SMV SIGN RELOCATION BRACKET
P/N: 8SV-110-00064

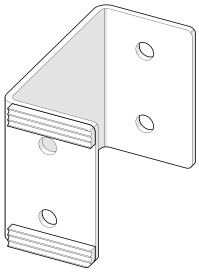

TOOLBOX RELOCATION BRACKET
P/N: 8SV-SM-01477

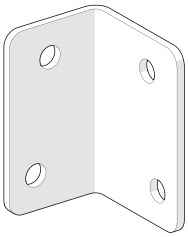

ADDITIONAL SERVICE PARTS

PART NUMBER	DESCRIPTION
8SV-P-00100	REAR LEG WINDOW WITH RUBBER
9SV-DP11	DOME PLUG 1/2" (BAG OF 10)
9SV-DP10	DOME PLUG 3/8" (BAG OF 10)
9SV-HWS	WINDSHIELD HINGE KIT
9BLK01	WINDSHIELD HINGE BLOCK SPACER, TALL STYLE, 3/4" THICK
9PWM110	WIPER MOTOR, 110 DEGREE
9PWB20-FB	WIPER BLADE, 20", FLEX
9PWA14-16	WIPER ARM, ADJUSTABLE LENGTH (11" - 16")
9PWK-HB	GLASS MOUNTING KIT FOR WIPER SYSTEMS
9SV-DSTRH	DOOR STRIKER KIT-INCLUDES CASE HARDENED STRIKER BOLT
9SV-IHRL	INSIDE HANDLE ROTARY LATCH KIT (INCL. L & R)
9SV-OHRL	OUTSIDE HANDLE ROTARY LATCH KIT (SET OF 2)
9SV-9PHW010-W	HINGE WASHER, KIT (SET OF 4) OD .635, ID .41, THK .08
9SV-9CUP02	CUP HOLDER, 3.75" DIAM. X 3.25" TALL
9PI01	POLY INSERT 1", 14-20 GA BLK MATTE, INSERT FINS .94/.95 (QTY.: 1)
9PI02	POLY INSERT 3/4", 14-20 GA BLK MATTE FINISH, INSERT FINS 0.69 (QTY.: 1)
9SV-WL1	WINDSHIELD LATCH KIT 1, POPS OPEN W/S FOR VENTING ONLY
8SV-WL3	WINDSHIELD LATCH & BRKT ASS'Y. SGL POST (SET OF L&R)
9SV-9HR04	THICK PANEL SNAP BUSHINGS, .937ID X 1.093OD (SET OF 2)
9SV-9HR0005	TEE FITTING, 1-1/8” x 1-1/8” x 5/8”
9SV-9HR0099	3/8 X 5/8 HOSE BARB, M16X1.5 THREAD
9SV-9HR00601.0	HOSE CLAMPS #10 (1") (QTY.: 6)
9SV-9HR00601.5	HOSE CLAMPS #16 (1.5") (QTY.: 2)
9SV-UHTRILV	UNIVERSAL HEATER IN-LINE VALVE (SET OF 2)
9SV-9HR0048	ROCKER SWITCH (HI-OFF-LOW)
9SV-9HR-L	REPLACEMENT LOUVER-15,000 & 20,000 BTU HEATER, KL47
8SV-9PH20WG	TUCK-AWAY HEATER WITH WIRED GROUND
9SV-HRH61-20	HEATER HOSE (5/8" I.D.)-20 FT
9PH20-2	FAN 120 x 120 x 38 12VDC 12W 3200 RPM
9SV-WH-00072	WIRING HARNESS POWER
8SV-WH-GF	WIRE HARNESS, GLASS FUSE
9DL01H	KEYS, SET OF 2 ON A RING, FOR HANDLE 1096-1, KEY CODE C40
8SV-HKWTB-L	HINGE KIT, TOP & BOT., LEFT
8SV-HKWTB-R	HINGE KIT, TOP & BOT., RIGHT

TRIM LOK, STD, 1/16" - 1/8" GRIP	5/8" STD BULB, 1/16" GRIP	1" FLAT BULB, 1/16" GRIP	ARCH PSA RUBBER	WINDOW RUBBER	1" SIDE BULB, 1/16" GRIP	3/4" SIDE BULB, 1/16" GRIP	3/4" SIDE BULB, 1/4" GRIP	ARCH PSA .2 X .15
		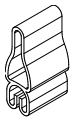			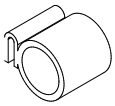	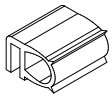		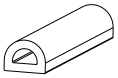
9SV-PRO1-10	9SV-PRO2-15	9SV-PRO5-10	9SV-PRO9-10	9SV-PR10-10	9SV-PR16-10	9SV-PR17-20	9SV-PR38-15	9SV-PR53-15

OPTIONAL ACCESSORIES FOR MAHINDRA 1626 CAB

FRONT LED WORK LIGHTS (P/N: 9LEDW4)

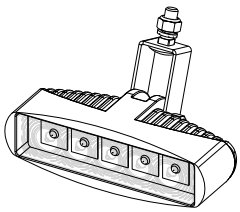

REAR LED WORK LIGHTS (P/N: 9LEDW3)

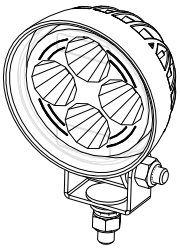

STROBE LIGHT (P/N: 9LEDS2)

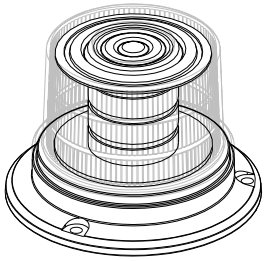

DOME LIGHT (P/N: 9LEDD14)

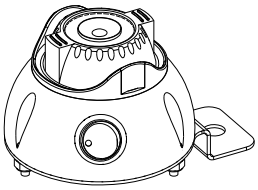

SIDE VIEW MIRRORS (P/N: 9PM5)

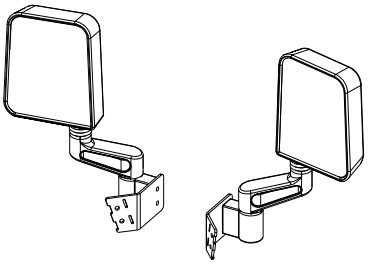

REAR VIEW MIRROR (P/N: 9PM3)

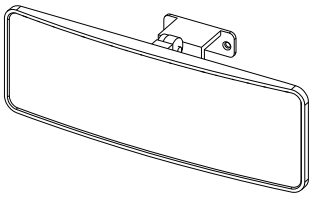

REAR WIPER KIT, 85 DEG W/ 12" FLEX BLADE (P/N: 9PWK8512F9-11A)

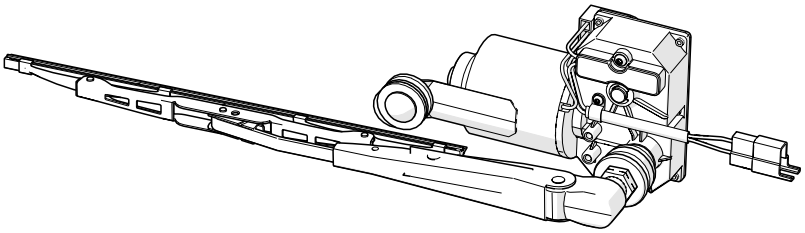

SEAL KIT (P/N: 9SK4)

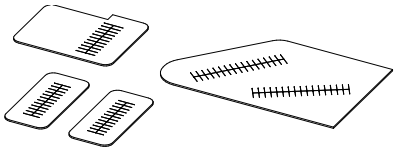

Tightening of Non-Structural Bolts

For light or medium duty fastening, Curtis recommends using a general industry standard of tightening until snug and then giving an additional one quarter turn of the tool as deemed reasonable for the application (i.e.: at the installer's discretion).

If torque values are required, the examples listed below are intended as a reasonable reference for use in the majority of non-structural fastener applications such as: small diameter fasteners; bolts passing thru tubing, glass, plastic, nylon or rubber washers, threaded inserts, etc.

If more than one application below applies, use the lower torque value.

FASTENER SIZE:	FASTENER TYPE:	WASHER MATERIAL:	APPLICATION:	TORQUE (INCH-POUNDS) (±5)
#10	Machine Screws	-	in Nylon P-Clamps	20
#10	Machine Screws	-	Strobe Light (plastic base)	35
M5	Set Screws	-	Wiper Arm	20
1/4"	Cap Nut	-	Windshield Wiper	20
1/4"	Bolts	-	Tubing (5/8" to 3/4" wide)	132
1/4"	Bolts	Rubber	-	60
1/4"	Bolts	Nylon / Plastic	-	72
1/4"	Bolts	-	Factory Installed Threaded Inserts	132
5/16"	Bolts	-	Tubing (1" or wider)	60
5/16"	Flat Head Bolts	-	Plastic Windshield Hinge	79
5/16"	Bolts	Rubber	-	120
5/16"	Bolts	Nylon / Plastic	-	150
5/16"	Ball Studs	-	-	150
5/16"	Bolts	-	Factory Installed Threaded Inserts	240
3/8"	Bolts	-	Tubing	120
M12	Door Striker Pins	-	-	120

Torque Specs. for Structural Bolts

This page is for use primarily when dealing with high-strength vehicle fasteners such as ROPS hardware that hold the structure together for safety. This page can also be used for other solid metal-to-metal joints. Do not use these high torque values on any of the following applications involving: tubing, plastic, nylon or rubber washers, threaded inserts, etc.. See previous page regarding less critical fasteners.

The values below apply to fasteners that are dry or lubricated with normal engine oil. They do not apply if special graphited or moly disulphide greases or other extreme pressure lubricants are used. This applies to both UNF and UNC threads. Remember to always use the same grade or property class when replacing bolts.

SAE Grade No.		2				5				8*			
Bolt head identification mark as per grade. NOTE: Manufacturing Marks Will Vary													
Bolt Size		TORQUE Pounds Feet		TORQUE Newton-Meters		TORQUE Pounds Feet		TORQUE Newton-Meters		TORQUE Pounds Feet		TORQUE Newton-Meters	
Inches	Millimeters	Min.	Max.	Min.	Max.	Min.	Max.	Min.	Max.	Min.	Max.	Min.	Max.
1/4	6.35	5	6	7	8	9	11	12	15	12	15	16	20
5/16	7.94	10	12	14	16	17	20.5	23	28	24	29	33	39
3/8	9.53	20	23	27	31	35	42	48	57	45	54	61	73
7/16	11.11	30	35	41	47	54	64	73	87	70	84	95	114
1/2	12.70	45	52	61	70	80	96	109	130	110	132	149	179
9/16	14.29	65	75	88	102	110	132	149	179	160	192	217	260
5/8	15.88	95	105	129	142	150	180	203	244	220	264	298	358
3/4	19.05	150	185	203	251	270	324	366	439	380	456	515	618
7/8	22.23	160	200	217	271	400	480	542	651	600	720	814	976
1	25.40	250	300	339	406	580	696	787	944	900	1080	1220	1464
1-1/8	25.58	-	-	-	-	800	880	1085	1193	1280	1440	1736	1953
1-1/4	31.75	-	-	-	-	1120	1240	1519	1681	1820	2000	2468	2712
1-3/8	34.93	-	-	-	-	1460	1680	1980	2278	2380	2720	3227	3688
1-1/2	38.10	-	-	-	-	1940	2200	2631	2983	3160	3560	4285	4827

*Thick Nuts must be used with Grade 8 bolts

METRIC BOLT TORQUE SPECIFICATIONS

Size of Screw	Property Class	Course Thread Pitch (mm)	Course Thread Pounds Feet	Course Thread Newton-Meters	Fine Thread Pitch (mm)	Fine Thread Pounds Feet	Fine Thread Newton-Meters
M6	5.6	1.0	3.6-5.8	4.9-7.9	-	-	-
	8.8		5.8-9.4	7.9-12.7		-	-
	10.9		7.2-10	9.8-13.6		-	-
M8	5.6	1.25	7.2-14	9.8-19	1.0	12-17	16.3-23
	8.8		17-22	23-29.8		19-27	25.7-36.6
	10.9		20-26	27.1-35.2		22-31	29.8-42
M10	5.6	1.5	20-25	27.1-33.9	1.25	20-29	27.1-39.3
	8.8		34-40	46.1-54.2		35-47	47.4-63.7
	10.9		38-46	51.5-62.3		40-52	54.2-70.5
M12	5.6	1.75	28-34	37.9-46.1	1.25	31-41	42-55.6
	8.8		51-59	69.1-79.9		55-68	75.9-92.1
	10.9		57-66	77.2-89.4		62-75	84-101.6
M14	5.6	2.0	49-56	66.4-75.9	1.5	52-64	70.5-86.7
	8.8		81-93	109.8-126		90-106	122-143.6
	10.9		96-109	130.1-147.7		107-124	145-168
M16	5.6	2.0	67-77	90.8-104.3	1.5	69-83	93.6-112.5
	8.8		116-130	157.2-176.2		120-138	162.6-187
	10.9		129-145	174.8-196.5		140-158	189.7-214.1
M18	5.6	2.0	88-100	119.2-136	1.5	100-117	136-158.5
	8.8		150-168	203.3-227.6		177-199	239.8-269.6
	10.9		175-194	237.1-262.9		202-231	273.7-313
M20	5.6	2.5	108-130	146.3-176.2	1.5	132-150	178.9-203.3
	8.8		186-205	252-277.8		206-242	279.1-327.9
	10.9		213-249	288.6-337.4		246-289	333.3-391.6