https://truckmanualshub.com/

MINI EXCAVATORS

Concrete solutions. Always.

12ZT

Operative weight 1,160 - 1,185 kg
Maximum power 10.2 kW - 13.7 HP

14SR

Operative weight 1,230 - 1,255 kg
Maximum power 10.2 kW - 13.7 HP

EUROCOMACH®

https://truckmanualshub.com/

LIKE THE BIG ONES BUT SMALLER.

Compact but incredibly stable, 12ZT (zero-tail swing with widened carriage) and 14SR (reduced rear swing radius) are designed for excellent performance on any site, especially indoors.

The undercarriage and blade are very compact and, thanks to the extendible carriage from 790 to 1,050 mm, these machines can even pass through the narrowest of passages.

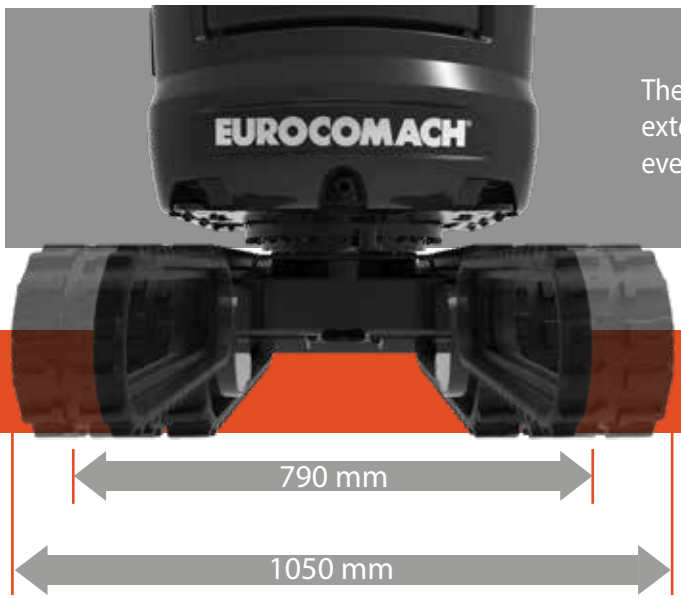

https://truckmanualshub.com/

12ZT does not have rear overhands, the ballast remains inside the footprint of the caterpillars allowing the operator to easily work even in confined spaces.

By simply removing two screws, the roll-bar can be folded back, an operation which allows for extreme ease of movement even in spaces with limited height clearance. Both models are equipped with roll bars and can be fitted with ABS roofs with a storage compartment.

ZERO-TAIL SWING

https://truckmanualshub.com/

The driving position has been studied in order to give maximum comfort for the operator: power-assisted controls, wrist rests and plenty of leg room.

https://truckmanualshub.com/

COMFORT, SAFETY AND FUNCTIONALITY: FINALLY TOGETHER.

Both modes have two methods of side shifting: first gear with reduced speed and high torque, second gear for greater transfer speed; all controlled by a handy button on top of the backfill blade lever. The side-shifting can be controlled by the integrated movement levers and pedals.

The side opening of the left arm, a characteristic of these unique machines, does not impede the operator getting in or out in any way.

https://truckmanualshub.com/

EVERY COMMAND IS IN YOUR HANDS.

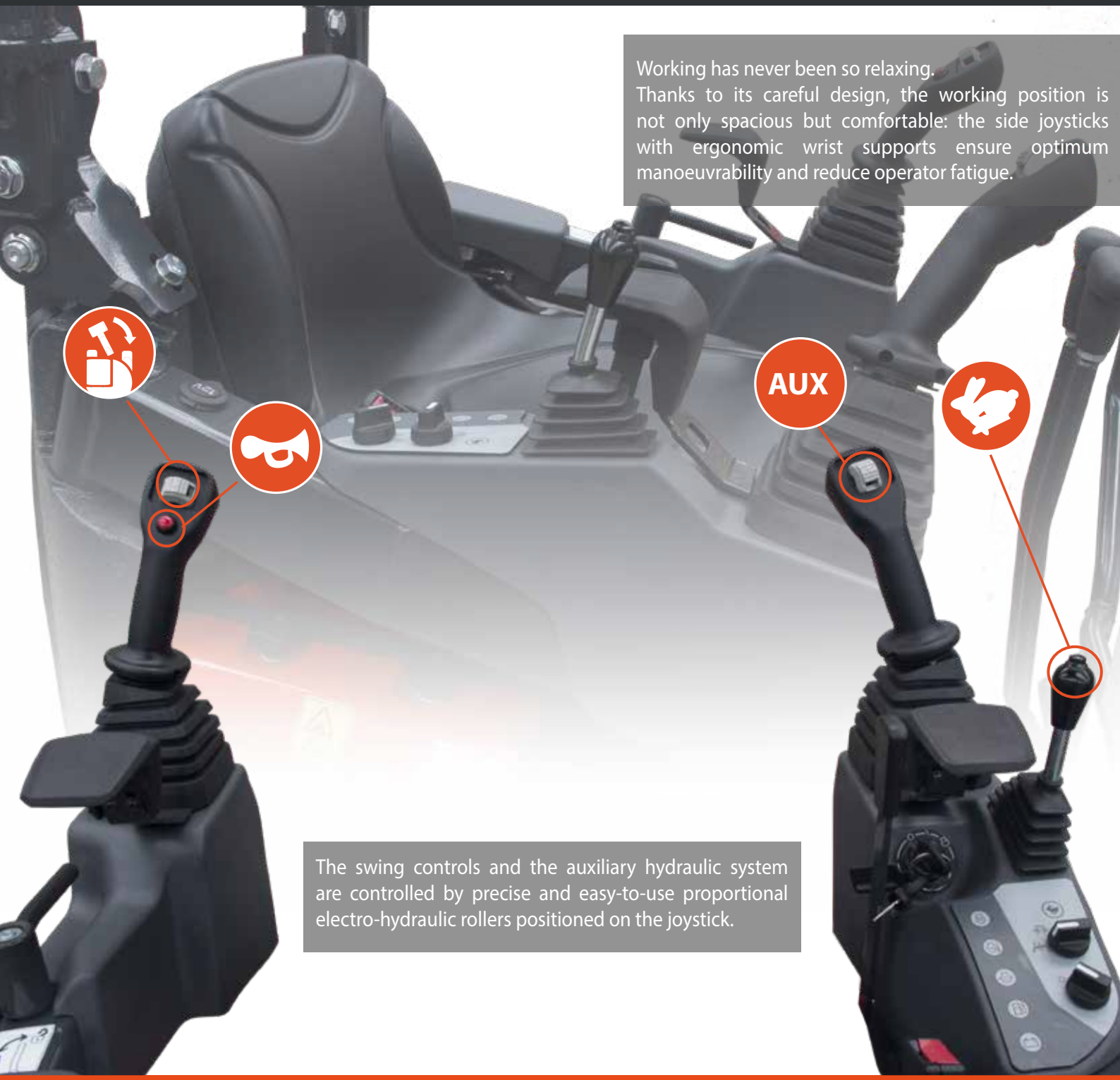

Working has never been so relaxing.
Thanks to its careful design, the working position is not only spacious but comfortable: the side joysticks with ergonomic wrist supports ensure optimum manoeuvrability and reduce operator fatigue.

The swing controls and the auxiliary hydraulic system are controlled by precise and easy-to-use proportional electro-hydraulic rollers positioned on the joystick.

https://truckmanualshub.com/

VISIBILITY

Thanks to its special design, the roll bar mounts are on the back of the machine, allowing the operator to have clear visibility of the entire surrounding area.

The ABS roof version can also be equipped with two additional LED work lights in addition to the standard ones supplied on the arm: maximum visibility even on sites with low light.

WORK LIGHTS

The powerful LED light installed on the arm optimises visibility even in low light conditions.

https://truckmanualshub.com/

SAFETY

Safety belts and ROPS and TOPS certified roll bar and (if fitted with roof and protection grille) Level 1 FOPS certified, ensuring complete safety in the driving position, even in the event of an accident.

https://truckmanualshub.com/

SAFETY, RELIABILITY AND PERFORMANCE.

The variable flow pump, standard of the 14SR and optional on the 12ZT always ensures the correct power output: more fluid movements and extreme reactivity to operator controls.

EFFICIENCY AND CONSUMPTION

At the heart of the excavator is the efficient Kubota D722 - Stage 5 motor, designed and built to optimise performance and reduce fuel consumption. The long planned service intervals contribute to economic efficiency, reducing machine down time costs.

https://truckmanualshub.com/

TRANSPORT ACCESSIBLE TO ALL.

Transporting is one of the strong points of the 12ZT and 14SR. Thanks to its limited weight, these excavators can also be loaded on low capacity trailers, leaving space for other equipment.

https://truckmanualshub.com/

MAINTENANCE HAS NEVER BEEN SO EASY.

Practical and fast, the foldable seats allow access to serviceable parts in seconds and thanks to the mechanical locks, maintenance can be carried out in complete safety.

The side handle allows the bonnet and seats to be lifted and closed extremely easily.

ACCESSIBILITY

The tilting bonnet lifts with a single, simple movement.

https://truckmanualshub.com/

SPACE FOR SERVICES.

The fuel tank is integrated in the rear ballast, a signature feature of Eurocomach excavators, making access to other components incredibly easy.

ACCESSIBILITY

Common or dedicated access makes all servicing operations simple and quick.

https://truckmanualshub.com/

The opening of the extremely spacious diesel tank and the servicing area are under the seat. As well as being easier to control and clean, it offers easy access to all thermal motor filters (diesel, oil and air) as well as to the coolant and motor oil fillers.

In line with recent regulations, the 12ZT and 14SR are equipped with an easy to reach compartment for the user manual, placed on a quick open and close bonnet.

The battery and fuses are inside a dedicated compartment on the side of the machine.

INTEGRATED TANK

The added value of the 12ZT and 14SR is the integrated diesel tank in the rear ballast, that makes this machine unique in its class.

https://truckmanualshub.com/

THE IMPORTANCE OF BEING RELIABLE.

RELIABILITY

Designed and tested for high performance coupled with constant reliability.
The definition of the materials, selection of parts and design of the structures have ensured that the machine can cope with the most trying and demanding working requirements.
Of note among these is the moulded rotating column, the lifting cylinder protection and the blade that increase efficiency and durability of the product.

PERFORMANCE

https://truckmanualshub.com/

EUROCOMACH CONFIGURATION SUPPORT (ECS): ENDLESS POSSIBILITIES OF CUSTOMIZATION.

USEFULNESS AND SERVICES

We listen to every single one of your requirements in order to offer you the best machine solution possible.
We consider out products to not only be simple machines, but also the best opportunities for our customers.
Among the services provided are:

- Personalised paintwork
- Provisioning for auxiliary lines, customised by type and quantity
- Additional equipment

The numerous configurations available allow for the best choice to be made according to the work to be carried out.

https://truckmanualshub.com/

OPTIONALS.

The wide range of equipment designed especially for Eurocomach mini-excavators always guarantee the most appropriate use for machines by maximising their performance.
A complete offering of optional equipment levels, even for specific apparatus, ensuring best performance.

Roll-bar with ABS roof

Additional LED work lights

Personalised paintwork

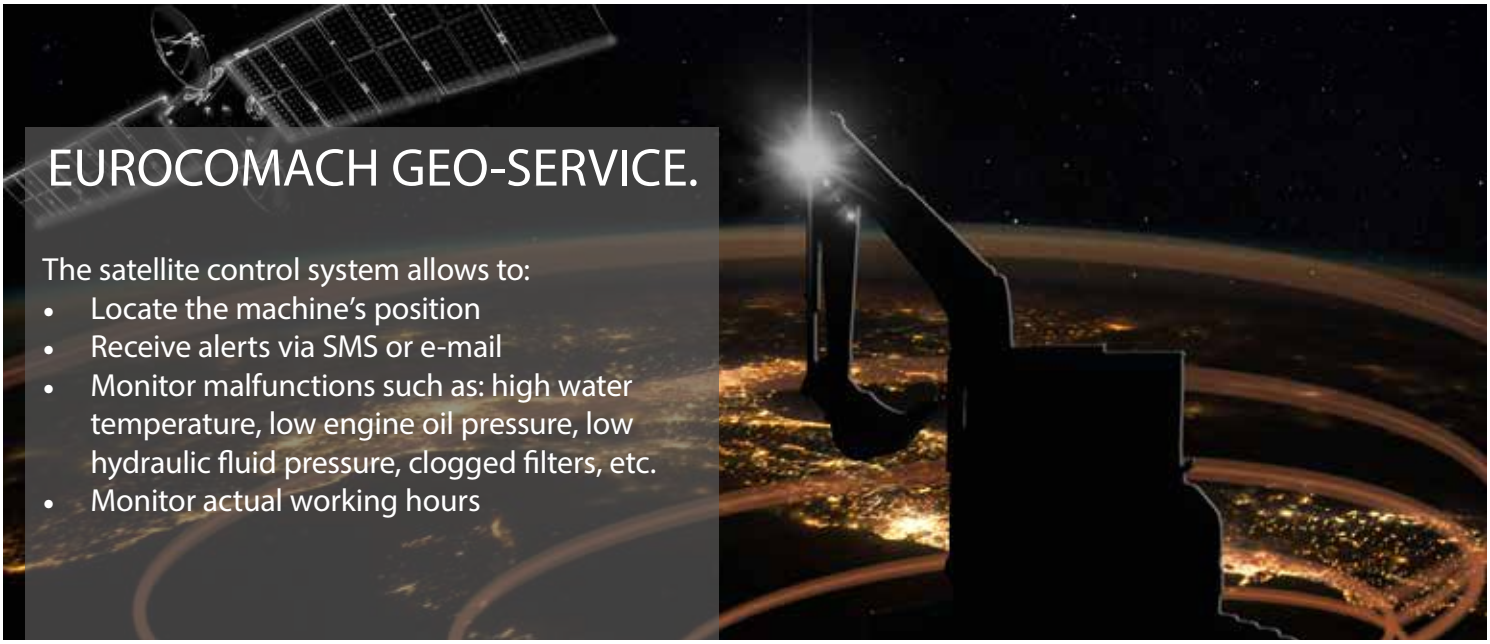

EUROCOMACH GEO-SERVICE.

The satellite control system allows to:

- Locate the machine's position
- Receive alerts via SMS or e-mail
- Monitor malfunctions such as: high water temperature, low engine oil pressure, low hydraulic fluid pressure, clogged filters, etc.
- Monitor actual working hours

https://truckmanualshub.com/

	14SR	12ZT
ENGINE		
Diesel motor, 3 cylinders, 719 cc capacity, water cooled	●	●
Electric pre-warming	●	●
Dry air filter with discharge valve and indication of filter blockage	●	●
Engine oil cartridge filter	●	●
Cartridge fuel filter	●	●
Fuel tank discharge hatch	●	●
Auxiliary cooling liquid expansion tray	●	●
CANOPY		
Roll bar, 2 folding mounts ROPS - TOPS	●	●
Roll bar, 2 folding mounts ROPS - TOPS and ABS FOPS roof Lev. 1	○	○
Adjustable seat	●	●
Seat belt	●	●
Wrist supports	●	●
Footrests	●	●
Side-shifting pedals	●	●
Rubber comfort foot board	●	●
High Water Temperature and low fuel level warning lights	●	●
Acoustic warning for water temperature	●	●
Hour meter	●	●
Horn	●	●
Unipolar 12 Volt power socket	●	●

	14SR	12ZT
SAFETY		
Machine blocking device during exit/access to driving seat	●	●
Anti-slip boarding plate	●	●
Raise / Lower handle	●	●
Pressure accumulator that permits the lowering of the arm in case of engine failure	●	●
HYDRAULIC SYSTEM		
Open circuit hydraulic system with fixed flow pump	●	/
Open circuit hydraulic system with variable flow pump	○	●
ISO hydraulic servo-controls	●	●
Hydraulic oil intake filter	●	●
Mechanical rotating tower lock	●	●
Two speed travel system	●	●
Single and Double effect hydraulic system	●	●
AUX 2 Predisposition for clamp rotor hydraulics with proportional electro-hydraulic control on left joystick (as an alternative to tilting)	○	○
ELECTRICAL SYSTEM		
Work lights on the lifting arm	●	●
Additional lights on the front canopy (only installed if ABS roof is present)	○	○
Rotating head lamp	○	○
Solenoid valve connectors and services (IP67)	●	●

	14SR	12ZT
UNDERCARRIAGE		
Variable track undercarriage	●	●
Backfill blade	●	●
Dozer blade cylinder protective casing	●	●
Carter final drive motors	●	●
Rotating joint protection casing	●	●
Rubber tracks	●	●
UTILITY		
Anti-theft system	○	○
Geo-service system for localisation and remote diagnostics	○	○
Second 900 mm excavation arm	●	/
Second 1020 mm excavation arm	○	●
Second 1150 mm excavation arm	/	●
Additional external counterweight	○	○
Personalisation of colour (RAL)	○	○
4 anchorage points for lifting	●	●
4 transport anchorage points	●	●
Visual indicator of on-board fuel level	●	●
Lifting cylinder protection casing	●	●

STANDARD EQUIPMENT	●
OPTIONAL EQUIPMENT	○
NOT AVAILABLE	/

TECHNICAL SPECIFICATIONS

https://truckmanualshub.com/

Operating weight with canopy	kg	1.160
Operating weight with canopy and ABS roof	kg	1.185
Translation speed	km/h	1st: 0 ÷ 1,8 / 2nd: 0 ÷ 3,8
Rotation speed	rpm	9,5
ENGINE		
Model		KUBOTA D722 - Stage 5
Max. Power (2.350 rpm)	kW - HP	10,2 - 13,7
Cylinder capacity	cc	719
Number of cylinders	No.	3
Cooling		Liquid
Consumption	l/h	1,8
Alternator	V (A)	12 (40)
Battery	V (Ah)	12 (45)
HYDRAULIC SYSTEM		
Pump type		2 × gear pumps
Pump displacement	cc	5,5 + 5,5
Pump capacity	l/min	26
Max. circuit calibration pressure	bar	165
Auxiliary system (max. pressure): AUX 1 single or double effect	l/min (bar)	26 (165)
PERFORMANCE		
Max. digging depth with standard arm (optional arm)	mm	1.860 (1.980)
Max. dumping height with standard arm (optional arm)	mm	2.130 (2.215)
Bucket breaking force (standard arm) ISO 6015	daN	1.150
Arm breaking force (standard arm) ISO 6015	daN	690
Traction force	daN	1.000
Ground bearing pressure with canopy (ABS roof)	kg/cm^2	0,29 (0,30)
Max. slope		60% - 30°
DIMENSIONS		
Maximum width	mm	790 - 1.050
Total height	mm	2.300
Rear rotation radius	mm	525
Excavation length, standard arm (optional arm)	mm	900 (1.020)
Tracks width	mm	180
Rollers number (for each side)	No.	3
REFILLING		
Fuel tank	lt	14,5
Hydraulic oil tank	lt	9,5
Hydraulic circuit capacity	lt	15
Cooling system capacity	lt	6
Engine oil	lt	1,8
CONTROLS		
Boom, dipper stick, bucket and turret swing		2 servo-assisted joysticks
Track movements (counter-rotation included)		2 servo-assisted levers
Dozer blade		servo-assisted lever
Auxiliary system with latch AUX 1 (single or double effect)		electroproportional switch on right joystick
Boom swing		electroproportional switch on left joystick

TECHNICAL SPECIFICATIONS

https://truckmanualshub.com/

Operating weight with canopy	kg	1.230
Operating weight with canopy and ABS roof	kg	1.255
Translation speed	km/h	1st: 0 ÷ 1,8 / 2nd: 0 ÷ 3,8
Rotation speed	rpm	9,5
ENGINE		
Model		KUBOTA D722 - Stage 5
Max. Power (2.350 rpm)	kW - HP	10,2 - 13,7
Cylinder capacity	cc	719
Number of cylinders	No.	3
Cooling		Liquid
Consumption	l/h	1,8
Alternator	V (A)	12 (40)
Battery	V (Ah)	12 (45)
HYDRAULIC SYSTEM		
Pump type		variable flow
Pump displacement	cc	5,5 + 5,5
Pump flow rate	l/min	28
Maximum unit calibration pressure	bar	200
Auxiliary system (max. pressure): AUX 1 single or double effect	l/min (bar)	28 (200)
PERFORMANCE		
Max. digging depth with standard arm (optional arm)	mm	2.045 (2.175)
Max. dumping height with standard arm (optional arm)	mm	2.290 (2.380)
Bucket breaking force (standard arm) ISO 6015	daN	1.150
Arm breaking force (standard arm) ISO 6015	daN	630
Traction force	daN	1.000
Ground bearing pressure with canopy (ABS roof)	kg/cm^2	0,31 (0,32)
Max. slope		60% - 30°
DIMENSIONS		
Maximum width	mm	790 - 1.050
Total height	mm	2.300
Rear rotation radius	mm	565
Excavation length, standard arm (optional arm)	mm	1.020 (1.150)
Tracks width	mm	180
Rollers number (for each side)	No.	3
REFILLING		
Fuel tank	lt	14,5
Hydraulic oil tank	lt	9,5
Hydraulic system capacity	lt	15
Cooling system capacity	lt	6
Engine oil	lt	1,8
CONTROLS		
Boom, dipper stick, bucket and turret swing		2 servo-assisted joysticks
Track movements (counter-rotation included)		2 servo-assisted levers
Dozer blade		servo-assisted lever
Auxiliary system with latch AUX 1 (single or double effect)		electroproportional switch on right joystick
Boom swing		electroproportional switch on left joystick

https://truckmanualshub.com/

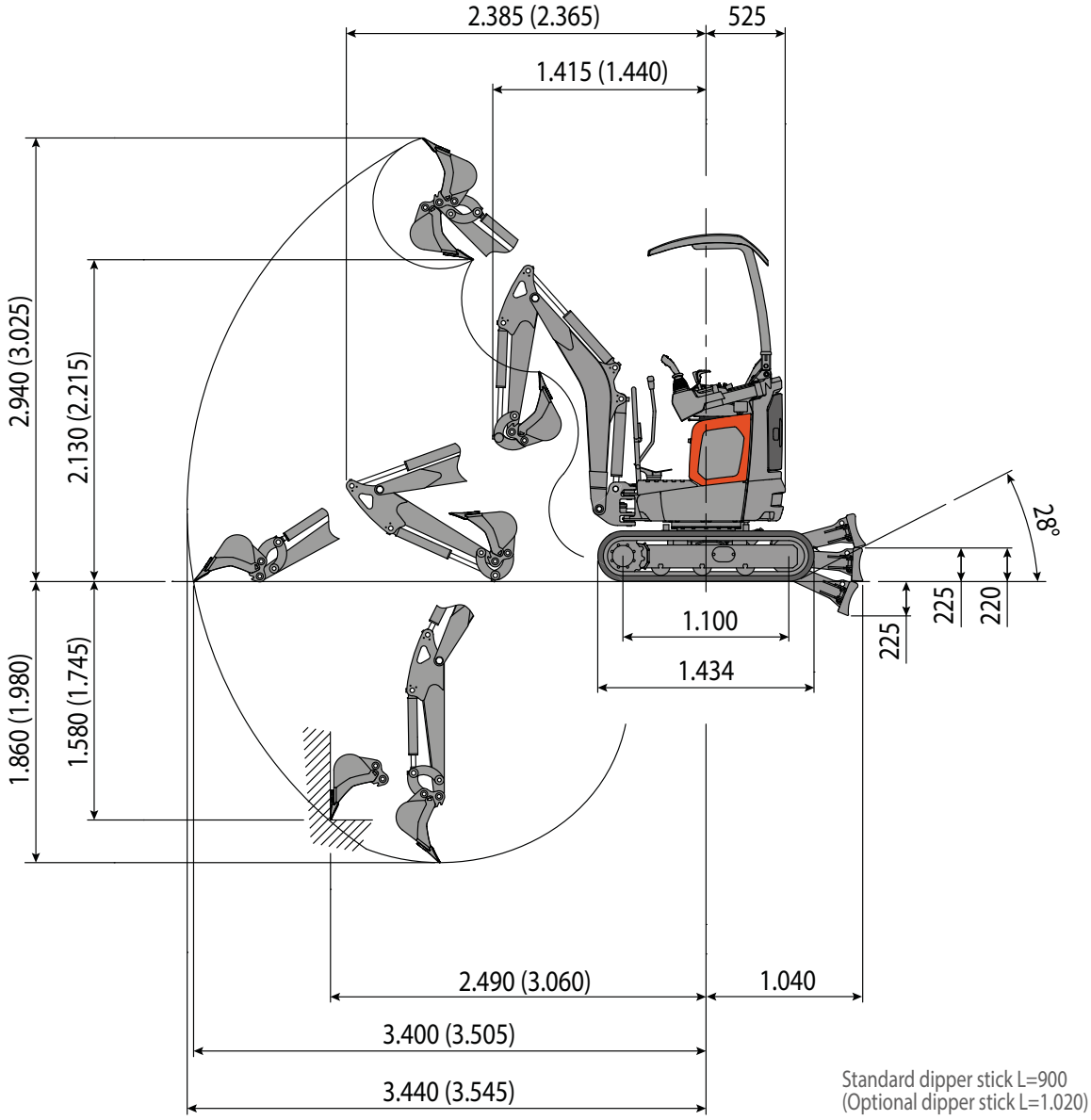

Standard dipper stick L=900
(Optional dipper stick L=1.020)

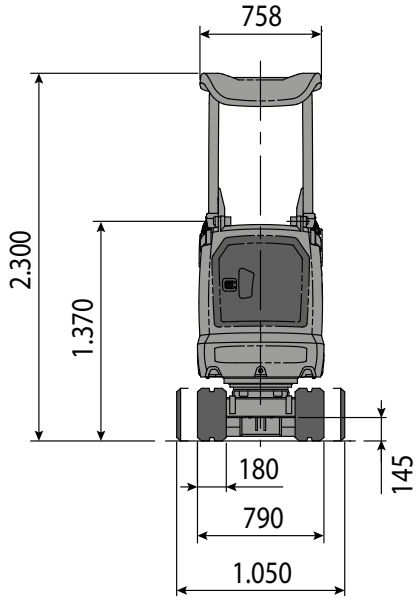

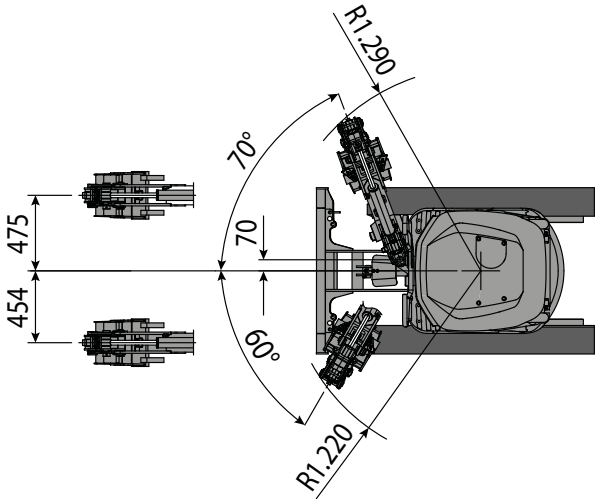

https://truckmanualshub.com/

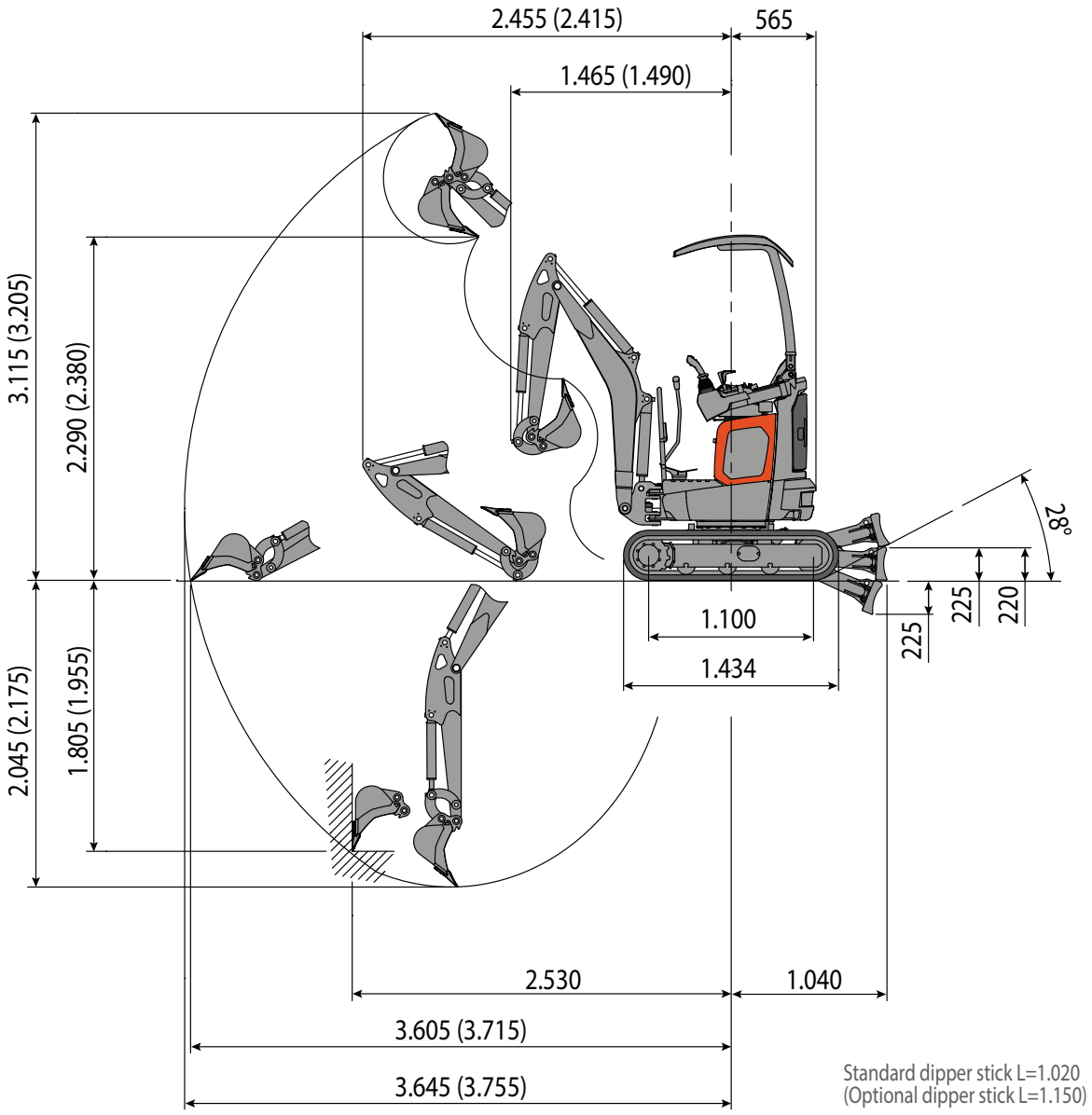

Standard dipper stick L=1.020
(Optional dipper stick L=1.150)

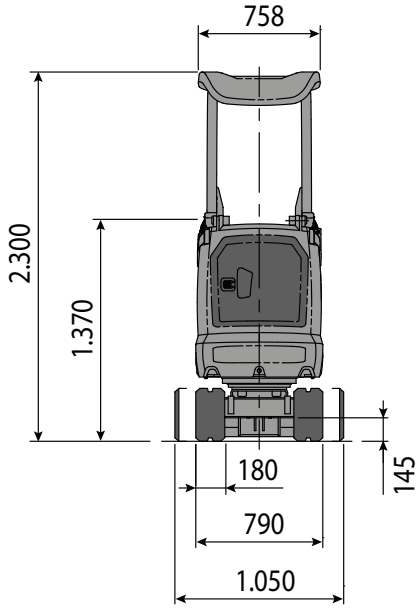

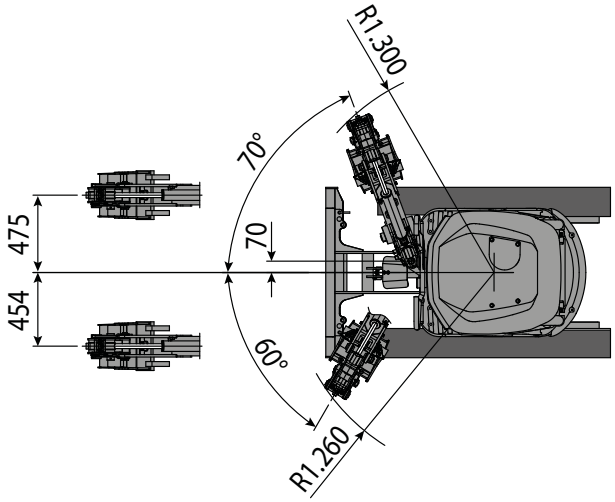

LIFTING CAPACITY

https://truckmanualshub.com/

Lifting capacity is based on the ISO 10567 norm and does not exceed more than 75% of the static tipping load or 87% of the hydraulic lifting capacity of the machine.

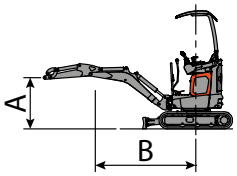

Reach refers to the centre of rotation.
* Indicates the limits of the hydraulic load.
0 m refers to the level of the ground.
For machines equipped with cab, rubber tracks, no bucket and no quick-release coupling.

Front Lateral Unit: ton

Raised Blade, Standard Boom (900 mm)
( ) values with wide carriage in brackets

A (m)	B (m)						
	1		2		MAX		
	Front	Lateral	Front	Lateral	Front	Lateral	MAX
2.0					*0,20	*0,22	2,43
1.0			*0,26	*0,25	0,14	0,12	2,94
0			0,24	0,18	0,12	0,10	2,95
-1.0	*0,40	*0,40	0,24	0,18	0,14	0,11	2,46

Lowered Blade, Standard Boom (900 mm)
( ) values with wide carriage in brackets

A (m)	B (m)						
	1.0		2.0		MAX		
	Front	Lateral	Front	Lateral	Front	Lateral	MAX
2.0					*0,20	*0,22	2,43
1.0			*0,26	*0,25	0,14	0,12	2,94
0			*0,29	0,18	*0,14	0,10	2,95
-1.0	*0,40	*0,40	*0,30	0,18	*0,16	0,11	2,46

Raised Blade, Optional Boom (1.020 mm)
( ) values with wide carriage in brackets

A (m)	B (m)						
	1.0		2.0		MAX		
	Front	Lateral	Front	Lateral	Front	Lateral	MAX
2.0					*0,20	*0,20	2,58
1.0			*0,26	*0,25	0,12	0,12	3,06
0			0,24	0,17	0,10	0,09	3,07
-1.0	*0,39	*0,39	0,23	0,17	0,09	0,10	2,61

Lowered Blade, Optional Boom (1.020 mm)
( ) values with wide carriage in brackets

A (m)	B (m)						
	1.0		2.0		MAX		
	Front	Lateral	Front	Lateral	Front	Lateral	MAX
2.0					*0,20	*0,20	2,58
1.0			*0,26	*0,25	0,13	0,12	3,06
0			*0,29	0,17	0,13	0,09	3,07
-1.0	*0,39	*0,39	*0,29	0,17	0,15	0,10	2,61

LIFTING CAPACITY

https://truckmanualshub.com/

Lifting capacity is based on the ISO 10567 norm and does not exceed more than 75% of the static tipping load or 87% of the hydraulic lifting capacity of the machine.

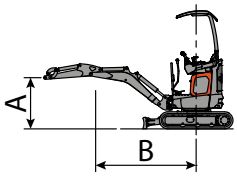

Reach refers to the centre of rotation.
* Indicates the limits of the hydraulic load.
0 m refers to the level of the ground.
For machines equipped with cab, rubber tracks, no bucket and no quick-release coupling.

Front Lateral Unit: ton

Raised Blade, Standard Boom (1.020 mm)
( ) values with wide carriage in brackets

A (m)	B (m)								
	1.0		2.0		3.0		MAX		
	Front	Lateral	Front	Lateral	Front	Lateral	Front	Lateral	MAX
2.0							*0,20	*0,22	2,69
1.0			*0,30	*0,28	0,15	0,14	0,13	0,11	3,15
0			0,27	0,20	0,14	0,11	0,12	0,09	3,16
-1.0	*0,44	*0,44	0,27	0,20			0,14	0,11	2,72

Lowered Blade, Standard Boom (1.020 mm)
( ) values with wide carriage in brackets

A (m)	B (m)								
	1.0		2.0		3.0		MAX		
	Front	Lateral	Front	Lateral	Front	Lateral	Front	Lateral	MAX
2.0							*0,20	*0,22	2,69
1.0			*0,30	*0,28	*0,15	0,14	0,14	0,11	3,15
0			*0,33	0,20	*0,16	0,11	0,15	0,09	3,16
-1.0	*0,44	*0,44	*0,33	0,20			*0,16	0,11	2,72

Raised Blade, Optional Boom (1.150 mm)
( ) values with wide carriage in brackets

A (m)	B (m)								
	1.0		2.0		3.0		MAX		
	Front	Lateral	Front	Lateral	Front	Lateral	Front	Lateral	MAX
2.0							*0,20	*0,22	2,84
1.0			*0,29	*0,27	0,14	0,13	0,12	0,10	3,28
0			0,26	0,19	0,13	0,10	0,11	0,08	3,29
-1.0	*0,43	*0,43	0,26	0,19			0,13	0,10	2,87

Raised Blade, Optional Boom (1.150 mm)
( ) values with wide carriage in brackets

A (m)	B (m)								
	1.0		2.0		3.0		MAX		
	Front	Lateral	Front	Lateral	Front	Lateral	Front	Lateral	MAX
2.0							*0,20	*0,22	2,84
1.0			*0,29	*0,27	*0,14	0,13	0,13	0,10	3,28
0			*0,32	0,19	*0,16	0,10	0,14	0,08	3,29
-1.0	*0,43	*0,43	*0,32	0,19			*0,15	0,10	2,87

https://truckmanualshub.com/

EUROCOMACH®

Sampierana S.p.A.
Via Leonardo da Vinci, 40 47021
S. Piero in Bagno (FC) - ITALY
Tel +39 0543.904211

www.eurocomach.com

QUALITY SYSTEM CERTIFICATION DNV ISO 9001

The information contained in this brochure is of a generic nature. Sampierana S.p.A. reserves the right to change technical data and product characteristics at any time without prior notice. The photos are for illustrative purposes only and do not necessarily refer to standard products. For instructions on the correct use of the products, see the use and maintenance manual. Sampierana S.p.A. shall not be held responsible for any damage to people and/or property, if the instructions contained in the use and maintenance manual are not complied with.