https://truckmanualshub.com/

Product standard：Q/LWZ 001

LOVOL-TE Series Wheeled Tractor

TE254、TE304、TE354

Operation Manual

The People’s Republic of China

LOVOL Heavy Industry Co., Ltd.

https://truckmanualshub.com/

LOVOL-TE Series Wheeled Tractor

TE254、TE304、TE354

Operation Manual

The People’s Republic of China

LOVOL Heavy Industry Co., Ltd.

https://truckmanualshub.com/

Product Identification Mark Record Form

Product Brand	
Product Model	
Manufacturing Number of Complete Machine	
Engine Model	
Manufacturing Number of Engine	
Purchase Date	
Purchase Place and Contact Information	
User	
Manufacturer	LOVOL Heavy Industry Co., Ltd. (P.R.C)
Factory Site	No.192 Beihai Road (south), Weifang, Shandong, P.R.C
Contact Number of Factory	

Note:
1. Users should fill in the form carefully in the case of purchase.
2. Numbers in the form should be recorded completely (including letters).

LOVOL-TE Series Wheeled Tractor

TE254、TE304、TE354

Operation Manual

The People’s Republic of China LOVOL Heavy Industry Co., Ltd.

* * *

Format: 880×1230 1/16 Number: TE-SM-03.4

November, 2015 The 1st Edition • November, 2015 The 1st Printing

Notice

Dear customers,

Thank you for your trust in our company and select our LOVOL series wheeled tractors. With the purpose of proper, reasonable and efficient operation of your tractor, please pay attention to important information below:

1. It is necessary to real this manual carefully before operating the tractor regardless of your driving experiences for this may be helpful for your reasonable and effective tractor operations.
2. For more economic benefits of you and longer service life of the tractor, please read this manual and attached engine and agricultural implement operation instructions carefully prior to use this tractor. Besides, operate and maintain this tractor well in strict accordance with provisions in this manual in order to allow the tractor to play a full role in its performance.
3. Do not modify this tractor at will to avoid tractor performance influences and even accidents. Moreover, such influences and accidents are not included in our “Three guarantees” service.
4. Since agricultural technologies and soil conditions are different from place to place, there may be some differences in recommended product purposes, parameters, matching agricultural implements and operating efficiencies provided by this operation manual. Therefore, users should select according to specific conditions.
5. Operation, maintenance and repair for this tractor should be implemented by people who know well about tractor features and possess relevant safe operation knowledge.
6. Drivers should possess agricultural vehicle or tractor driving licenses issued by local transportation department.
7. Please comply with local safety requirements and road traffic regulations at any time to avoid accidents.
8. It is not allowed to exceed specified range of this operation manual or there will be tractor performance deterioration or faults.
9. This manual will help the operator obtain a high level of operation, which is not a quality assurance. The data, illustrations and descriptions in this manual are only limited to be used for operation, maintenance and repair of machinery.
10. For continuous machine quality improvement, operating performance and safety performance improvements, our company will change some component designs timely and there will be some differences between contents, figures, etc. in the manual and actual products accordingly. Contents of this manual will be changed without any further notice and we apology for the inconvenience this may cause.
11. Product executive standard for this manual is in compliance with the latest one released before the product manufacturing date.

Overview

This operation manual provides detailed introduction about safety precautions, running-in, usages, technical maintenance, adjustments, faults and corresponding troubleshooting of various parts for LOVOL series wheeled tractors and can be used as reference for tractor drivers and maintenance personnel.

In this manual, safety warning signs ⚠ point out important safety information. When this symbol appears, please be caution of potential injuries. Carefully read information under this symbol and inform other operators of this.

⚠**Warning:** If it is inevitable, the potential hazard may lead to serious injuries or even death;

⚠**Attention:** If it is inevitable, the potential hazard may lead to slight or intermediate injuries.

Important: It is used to describe some matters involved with machine damages and environmental pollutions.

Note: It is used to describe some supplementary information.

This operation manual is an essential part for the product and is provided to a user with the tractor. Please keep this manual properly.

In the case of any confusion during reading this operation manual, welcome to dial out service hotline: 4006589888 for consultation.

Intended Purpose

LOVOL series wheeled tractor is a multi-purpose large-sized agricultural one. This machine possesses advantages like compact structure, easy control, flexible steering, large traction, wide range of usage and easy maintenance. When being equipped with applicable agricultural implements, this tractor can be applied to tilling, harrowing, sowing and harvesting operations; When being equipped with a trailer, this tractor can be applied to agricultural transport operations with a mass ratio for the tractor and trailer (trailer gross mass: tractor gross mass) not more than 3; besides, it can be taken as the prime power for water pump and thresher. For the optimal economic benefit, please apply applicable matching agricultural implements according to relevant requirements in this manual (See Appendix 11.5).Users should use, maintain and repair this tractor in strict accordance with conditions provided by the manufacturer as well as basic requirements for the intended purpose. Any other operations except those for the intended purpose of the tractor would be taken as violations.

The manufacturer assumes no responsibility for any machine reliability deterioration, machine damage or personal injury which is caused by unauthorized tractor modification or operation violation for its intended purpose.

Chinese-English Comparison List for Common Units

No.	Unit Category	International Unit
1	Time	s
2		min
3		h
4	Length	mm
5		cm
6		m
7		km
8	Force	N
9		kN
10	Moment of Force	N·m
11	Mass	kg
12		g
13	Pressure	Pa
14		kPa
15		MPa
16		kgf/cm^2
17	Temperature	℃
18	Speed	km/h
19	Rotational Speed	r/min
20	Electric Current	A
21	Voltage	V
22	Volume	L
23		ml
24	Flow Rate	L/min
25	Power	kW
26		PS
27	Fuel Consumption	g/kW·h
28	Accumulator Capacity	A·h

Content

1 Safety Precautions ---------- **1**

1.1 General Provisions ----------1

1.2 Safety warning signs ----------5

2 Product Identification ----------**10**

3 Operation Instruction ----------**10**

3.1 Product description ---------- 11

3.2 Tractor maneuvering mechanism and instrument ---------- 11

3.3 Engine start ---------- 16

3.4 Start the tractor ---------- 18

3.5 Tractor steering ---------- 18

3.6 Tractor gear shift ---------- 19

3.7 Differential lock operation ---------- 20

3.8 Front drive axle usage ---------- 20

3.9 Tractor braking ---------- 21

3.10 Tractor stopping and engine flameout ---------- 21

3.11 Tire use and removal and installation ---------- 21

3.12 Counterweight usage ---------- 23

3.13 Drive's seat adjustment ---------- 23

3.14 Use of tractor operating device ---------- 23

3.15 Tractor running-in ---------- 32

3.16 Tractor common failures and troubleshooting ---------- 34

4 Accessories, Spare and Wearing Parts ----------**45**

4.1 Accessories and spare parts ---------- 45

4.2 Wearing parts ---------- 46

5 Maintenance Instruction ----------**47**

5.1 Technical maintenance procedures ---------- 47

5.2 Clutch adjustment ---------- 51

5.3 Brake adjustment ---------- 53

5.4 Trailer air brake adjustment ---------- 54

5.5 Main drive adjustment ---------- 56
5.6 Adjustment of traveling and steering system ---------- 59
5.7 Adjustment of front drive axle ---------- 63
5.8 Hydraulic lifter adjustment ---------- 64
5.9 Use and maintenance of air cleaner ---------- 65
5.10 Fan belt tension adjustment ---------- 66
5.11 Check and change oil in the engine oil sump ---------- 67
5.12 Fuel filter maintenance ---------- 67
5.13 Oil filter maintenance ---------- 68
5.14 Oil level inspection of front drive axle ---------- 68
5.15 Fuel tank maintenance ---------- 70
5.16 Tire pressure inspection ---------- 70
5.17 Engine cooling system maintenance ---------- 71
5.18 Fuel system venting ---------- 71
6 Storage ---------- 73
6.1 The reasons of tractor damage in shutdown period ---------- 73
6.2 Storage of tractor ---------- 73
6.3 Maintenance during period of sealing-up for safekeeping tractor ---------- 74
6.4 Unseal tractor ---------- 74
7 Delivery, Acceptance & Transportation ---------- 76
7.1 Delivery and Acceptance ---------- 76
7.2 Transportation ---------- 76
8 Technical Specification ---------- 77
8.1 Product model ---------- 77
8.2 Two-wheel driven tractor technical specification of LOVOL-TE series ---------- 78
8.3 Four-wheel driven tractor technical specification of LOVOL-TE series ---------- 81
8.4 Technical specification of TE series tractor ---------- 88
9 Disassembly and Disposal ---------- 89
10 Guarantee Items ---------- 90
10.1 Basis for product guarantee ---------- 90
10.2 Conditions for guarantee nonperformance ---------- 90

11 Appendixes ---------- **91**

11.1 Oil, fuel and solution used for tractor ---------- 91

11.2 Main bolt/ nut tightening torque table ---------- 92

11.3 Tractor roller bearing ---------- 93

11.4 Tractor chassis seal: ---------- 94

11.5 LOVOL series tractor matching implement ---------- 97

12 Index ---------- **101**

Customer Feedback Information sheet ---------- **105**

1 Safety Precautions

1.1 General Provisions

Prior to implementation, you must read through and have a good understanding of user manual for safety operation. Do not operate the machine at any time until you have mastered the operational steps indicated in this manual. During operation, you should comply with the following precautions and important safety instructions such as Warning, Attention, Important, Note.

Notices

1. The driver should read through this manual and fully understand the meaning as well as safety warning signs.
2. The driver should know how to operate and work with this machine.

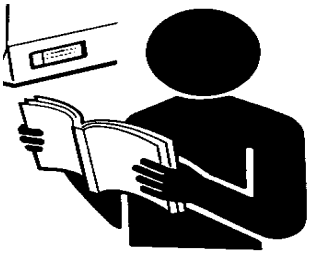

Fig. 1-1 Read Notice

Qualified operator

1. When operating this machine, the driver should have ability to judge in any cases.
2. Those, who are in poor health, or have drunk, or lack enough sleep, or are pregnant, color blindness or under 18 years, will be banned to operate this machine.
3. The driver should have accepted special training and obtained license for driver subject to check-up process. He or she shall comply with the traffic rules strictly.
4. For new operator, always drive the machine at lower speed until he or she has been proficient in operation.

Fig. 1-2 Qualified Operator

Uniform for drivers

1. During operation, the drivers should wear tight fitting clothes; No loose working suits and shirts allowed, never put on neckties, scarves or necklaces, etc; For female driver, long hair (if any) should be coiled up.
2. If you work on the site close to tractor or operating parts, coil up your hair (if any), never put on neckties, scarves or necklaces, etc. If these items are wringed into machine, this can cause serious injury.
3. During operations, it is necessary to wear protective tools such as safety shoes, safety helmet, goggles and gloves.

Fig. 1-3 Uniform for drivers

Application of fuel

1. The fuel is flammable, and shall be refilled in the places far away from Fire source.
2. Prior to refilling fuel tank, turn off the engine.
3. Don’t smoke and be close to fire when refilling and repairing fuel system.
4. Keep machine clean without dirt, grease, or debris; When fuel and oil overflow, wipe them out with a clean cloth.
5. The quality of fuel and grease should meet the requirements as specified in “Appendix” section.

Fig. 1-4 Application of fuel

Safety replacement of operating oil

1. The working fluid is dangerous and can cause serious injuries, such as high pressure hydraulic oil, brake fluid, engine oil, etc.
2. Shut off the engine before replacing working fluid. No fire and no smoking; Use a cloth to wipe up the oil when it overflows.
3. Replace operating oil with those at specified grade.
4. The used operating oil is waste oil and can not be thrown away.

Tire maintenance precautions

1. In case of installation and removal of tire, it is easy to cause explosion if you fail to operate as specified in the manual. This can cause serious injury or even death; never install or disassemble the tires till you have obtained proper and safety operation experience.
2. Make sure inflation pressure for tire is correct; the maximum inflation pressure cannot exceed specified value. If this is the case, there will appear some crack threads on the edge of the tire, even such can cause explosion accident. When the inflation pressure has reached recommended value, deflation is required if both sides of tire have not positioned yet. Inflate again after the tire is re-fixed and the edge is lubricated.
3. Regular check and tighten torques of locknuts and bolts on the front and rear wheel rims, in order to avoid machine from rollover caused by disengagement of wheel during operation, and protect operator from serious injury and eliminate excessive damage to the machine.

Disposed oil and waster placement

1. Improper disposal of used oil and wasters can cause great threat to ecological environment.
2. Leak-proof container shall be used for disposed oil emission; never use food and beverage containers to prevent others mistake swallow, resulting in accidental injury.
3. Don’t dump used oil on the ground, into subway or discharge them into other water sources.
4. Don’t dispose arbitrarily used oil, fuel, refrigerant, brake fluid, filter elements or batteries, which can be hazardous; more information for reusing or disposing wasters in a right way, contact local environmental protection department or recycle center.

Fig. 1-5 Waster placement

Underway of living and industrial electricity cables

1. Make sure to secure all machine parts to prevent them loosening and electric shock.
2. When driving through under living and industrial electricity cables at low speed, make sure the maximum height falls into the range of cable safety values as required to avoid electric shock caused by hooking or touching with cables.
3. Prevent risk of electric shock from touch with high voltage wires during transportation, operation and in shutoff state.

Correct support for tractor

1. To descent the parts or tools onto the ground, the tractor and its parts needed to be lifted shall be supported safely.
2. Don’t use cinders, bricks (hollow) or other fragile substance under continued pressure to support machine.
3. Don’t operate tractor in the case only having a jack is used for support tractor.
4. Before operating jack, you should read through the user manual carefully. Never overloading, this is the case only if rigid support deck is stalled to avoid injury and property losses.
5. When using jack, only use it for support right under left and right axle shaft housing of rear axle and front bracket, no need to support other parts.

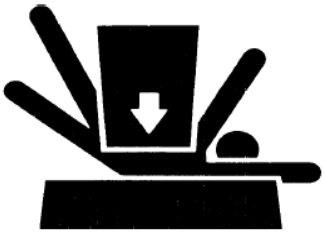

Fig. 1-6 Support risk

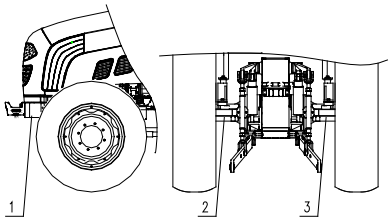

Fig. 1-7 Jack support parts

1.Front bracket;
2.Left axle shaft shell;
3.Right axle shaft shell

Cab emergency exit

There are three emergence exits in the cab, left door, right door and rear window. In the case of emergence, lift unlock handle to open the doors or rotate opening handle clockwise to open rear window and leave the cab safely.

Avoid touch with moving parts

1. When the machine is running, never carry out lubrication, maintenance, service or adjustment operations until its shutdown.
2. Make hands, feet and clothes away from moving drive components.

Fig. 1-8 Avoid touch with moving parts

Hydraulic pineline Caution

1. High-pressure hydraulic oil has sufficient strength to penetrate and injure body on the hand, ear or skin. To check, repair hydraulic line, the pressure on hydraulic system shall be released. Afterwards check possible leakages by using paperboard or wood board, thus avoid hands and body from injury resulting from high-pressure liquid.
2. In case of injury resulting from leaked hydraulic oil, immediately seek medical advice. If failed to take necessary treatment promptly, this can cause serious infection and unwell reaction.
3. If heating up near pressure liquid pipelines, it can produce a kind of spray mist, which can in turn cause severe burns on your body or others. Do not heat up by pipelines. It is not allowed to use electric welding, gas welding or welding torque at hydraulic pipeline or around other inflammable materials for heating. Thermal radiation other than flame may lead to accidental pipeline damage.

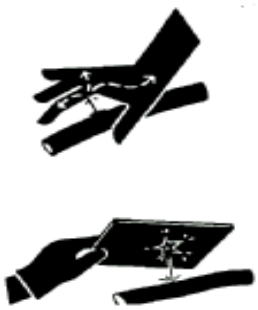

Fig. 1-9 Hydraulic line Leakage

Taking a ride for others

1. Only driver can be allowed to operate the machine in driver's seat; in the case of a machine without a co-driver's seat, other personnel are not allowed to get on. When there is a co-driver's on a machine, it can be applied to another one who is prohibited to cause interference, influence and obstacle to the driver.
2. When the machine starts or is working, anyone cannot be allowed to climb over the machine, and far away from area where this machine is placed, in order to avoid injury.

Emergency treatment

1. When the brake is failed, stabilize the steering wheel, and drive to a safe place, then immediately turn off the engine.
2. When the steering wheel is failed, immediately depress brake pedal and then turn off the engine.
3. A first aid kit shall be prepared at hand. There are telephone numbers of emergence center, hospital and fire department written down everywhere near all telephone sets. In the case of incidents, call local emergency center, hospital or fire department immediately for help.

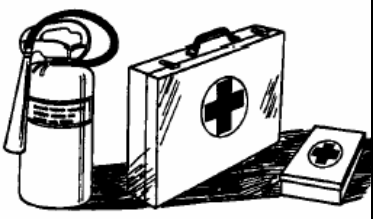

Fig. 1-10 Emergence treatment

4. In order to guarantee the safety and security of your own and others, do not risk driving or operating the machine. Only when making ensure that the machine is repaired by qualified technician and there is no one around service site, the operator can restart the machine to drive at low speed.
5. In the case of fire, immediately shut off engine. If there is fire extinguisher available, it is necessary to use it spray on flame base; If no fire extinguisher is available, use sand or others materials to put out the fire.

When tractor connects to other operating devices or parts are replaced

1. When optional or replaced part is installed, the engine must be closed, stop the tractor on the safe place for replacement. Prior to replacement, read through safety marks and user manual carfully, or carry out replacemenet by professionals if necessary.
2. When the tractor is connected to other devices, if lack working experience, it is possible to cause injury, or ask the professional for help when necessary.

Proper application of battery

1. As the gas overflowed from battery may run the risk of explosion, the battery shall be far away from open flame (such as matchsticks, lighters or cigarettes etc.); avoid short circuit, sparks.
2. The battery is only used for starting engine, not for any other purpose.
3. When the battery is charged or replaced, you should read the caution labels on the battery carefully.
4. Remove bond strap on negative pole (-), then remove the battery. To install battery, the first step is to install the positive pole (+) cable.
5. Before the battery is charged, remove it from machine.
6. Prior to charging, check if battery end cap vent is smooth and the ambient is ventilated.
7. Proper charging current depends on rated capacity of battery. After the charging is over, disconnect power supply, and detach cable from battery post to prevent battery explosion caused by possible electric ignition.
8. Do not use the batteries out of those specified for the machine.
9. It is more dangerous to touch with electrolyte (dilute Sulfuric acid). If it touches with eyes, skin and clothes, immediately wash them away with clean water; If it is splashed into eyes, flush it fully with clean water, then seek medical treatment. To avoid injuries, the following actions shall be taken:

   ① Wear goggles and rubber gloves;

   ② Avoid breathing smoke generated by respiratory electrolyte;

   ③ Prevent electrolyte splash or drip;

   ④ Use correct and parallel startup process.

Fig. 1-11 Application of battery

Fig. 1-12 Electrolyte danger

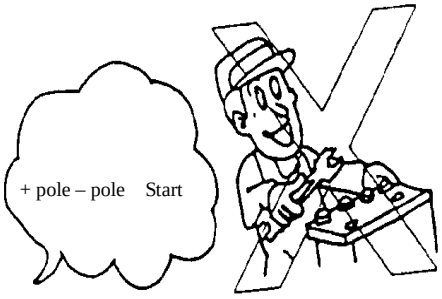

Fig. 1-13 Check of battery

Keep roll bar installation correct

If the roll bar becomes slack or is removed for any reason, it is required to reinstall the remaining parts in a right way. Tighten set bolts to right torque. If the roll bar structure is damaged, such as rollover accident, distortion etc., protective function may be lessened. The damaged roll bar must be replaced with a new one.

Proper use of folded roll bar and safety belt

1. If tractor has folded roll bar, keep it in fully expansion or in lockup positions. If tractor is operating with roll bar in folded position, be careful of driving tractor. If the roll bar is in folded position, do not use seat belt.
2. If the tractor restores to normal operating conditions, lift roll bar to fully expansion position and fasten it immediately. When roll bar is in fully expansion or lockup position, the safety belt must be used.
3. If spare fastener, retaining ring or retractor is available, the safety belt must be replaced on the whole.
4. Regular check safety belt and assembly fasteners to see whether those fasteners are slack, or safety belt is damaged or not, such as incision, scratch, abnormal damage and wear etc.
5. If there is no any roll bar or cab on the tractor, do not use safety belt..

Warning!

1. For safety and security of your life and property, operate the machine in a secure way to bring happiness to your relative.
2. When the tractor startup, you should note whether there is obstacle on the road or not and if someone stands between tractor and agriculture implement or trailer, press whistle for warning others to prevent accident injury due to suddenly startup of the tractor.
3. Do not start and operate tractor at the places away from driver’s seat. When starting tractor, make sure gear lever is changed to neutral position, power output control stick and front drive joystick disengaged, control stick for lifter in neutral position, in order to prevent accident caused by suddenly startup of tractor.
4. Do not use jumper short circuit terminal start engine. Otherwise, when the gearbox shifts to the gear, the tractor will automatically drive out of control. This can cause the accident hazards.
5. The movement of all the pedals shall not be hindered. All the pedals can restore to the original places smoothly. Never place some obstacles between floor and pedal. Do not place items which can be rolling or sliding down when stepping down the pedal. No carpets or other matting materials around pedal to avoid accident due to pedal movement.
6. Prohibit anyone to get on or off tractor while the tractor is driving, or crawl under the tractor body for overhaul when engine is in operation, as this can cause personal injury.
7. After stopping, the driver shall pull out the key, move the gear lever to neutral position and lock up the parking brake handle before he or she gets off the tractor, in order to prevent accident due to auto-movement out of control.
8. During transportation, left and right brake pedals shall be interlocked together, control appropriate speed. Pay full attention to whether it is beyond the height limit or not when driving through culverts and bridges. Slow down the speed in advance when turning around to avoid unexpected accident, such as rollover, collision.
9. During uphill or downhill, change to the lowest gear, and use throttle control reasonably. The tractor is inhibited to engage neutral gear or depress clutch pedal to slide down hill. No change of gear allowed when uphill or downhill to avoid rollover risk.
10. Do not take sharp turn when driving at higher speed or use unilateral brake to take sharp turn, in order to prevent rollover risk.
11. When driving on the road, you should pay attention to traffic marks, and strictly follow the traffic rules, in order to mitigate the risk of accidents.
12. When driving, you should strictly follow the traffic rules. The space between two vehicles shall be maintained no less than 60m to mitigate the risk of accident collision.
13. As the embankment near ditch, cave and dam is more unsecured, the weight of tractor may make it collapse. Make a detour, or this can run the risk of accidents.

14. The tractor shall never be overloaded, and is prohibited to work at the extreme limit in order to avoid personal injury or damage due to overload.
15. When the tractor is working at night, it is essential to set up a good lighting equipment in order to alleviate influence on performance of tractor and avoid the occurrence of dangerous accident.
16. When the tractor is working on harvest or yard field, it is required to install spark quench on exhaust pipe to mitigate the risk of unexpected accident.
17. In the case of rain or snow weather, slow down operating speed in order to alleviate the risk of rollover event due to slippery ground.
18. In the case of power output operation, it is a must to make sure reliable connection and protection to prevent injury caused by separation of moving parts.
19. When linkage or traction of implement, all axle pins shall be connected in a secure way to alleviate collision risk due to their separation from tractor. While disconnecting or towing implement, make sure all axle pines separate from tractor to avoid personal injury or machine damage due to unclear separation.
20. When lifting up, pay attention to engine throttle control in order to avoid injury or machine damage due to overtop.
21. On charging battery, it is necessary to make sure smooth filler plug vent, far away from open flames. Turn off the power before the battery is fully charged to prevent explosion.
22. Keep safety height consistent with the value allowed for high voltage output lines to avoid unexpected accident!
23. When tractor is working at field harvest, threshing or transportation for flammable goods, the fire extinguisher shall be equipped on the tractor to prevent the occurrence of accident.
24. On transportation of tractor, the user should install fault warning sign plate. If tractor fails to operation and needs repairing service, the fault warning sign plate shall be put in the position of more than 30m from aft tractor, which is used for remain other drivers that there is a vehicle to be repaired on the road ahead so as to avoid accidents.

Notice:

1. Regular check all bolts, nuts and loose parts on front and rear drive wheels and steering tie rod, if loosening, tighten them in time to prevent unexpected accidents.
2. When tractor PTO shaft is working, the housing must be installed for PTO shaft. It is prohibited for personnel to close to PTO shaft. When it bears load, the tractor shall not take a sharp turn to prevent universal joint or PTO shaft from damage; when PTO shaft is unused, the handle shall be separated from it to avoid unexpected accident.
3. After stopping, the driver shall not leave the tractor prior to shutoff of the engine in order to prevent unexpected accident caused by suddenly startup of tractor out of control.
4. When the tractor has to be stopped on the slope, the hand brake stick shall be in the position for operation, shut off engine, and engage the gear (forward gear in uphill position and reverse gear in downhill position). Be sure of using parking brake and chocking up rear wheel with triangular plug block to prevent unexpected accident due to self movement out of control.
5. Tire installation and adjustment shall be performed by qualified and experienced professionals with appropriate special tools. Improper installation of tire can cause severe accidents.
6. On cleaning up water tank, turn off the engine, and then start to work until the water tank cools down. This can prevent scalding injury and damage to the tank.
7. Before installation of optional parts, new parts or articulated implements, you shall read through instruction for safety mark and the user manual carefully.

Important:

1. New ex-factory or overhauled tractor shall be grinded as required of tractor specification so that the normal lifecycle of tractor can be guaranteed.
2. The tractor shall be required to use various solutions. Only if the fuel has finished sedimentation for impurity for least 48h and lubricating oil for power train has filtered by oil filter whose precision is consistent with lifter suction filter, can filling work be carried out. This can guarantee the life of related parts and working effectiveness of tractor.
3. Prior to startup of tractor, be sure of check oil line, circuit and the cooling water; after startup, observe the reads of all meters and normal operation of tractor.
4. Before the agriculture implement will be driven by using PTO shaft, check if fitness between tractor and driven implement is reasonable. In the case of plough, the angle between PTO shaft and universal joint is less than 15°; with normal hydraulic control, the angle between PTO shaft or implement input shaft and drive shaft is not greater than 20°after implement is lifted for steering on the edges of field; Never take rotary tiller into soil till the power output is connected as this can cause severe damage to rotary tiller and clutch of tractor [in order to improve operation efficiency, power source shall not be cut off when steering. However, the lifting height of implement from ground shall be 200mm or so].
5. When the temperature drops to the degree below 0℃ in winter, you must use antifreeze liquid in order to prevent damage of major parts such as water tank and engine.
6. The front drive axle of tractor is only used in agriculture field work and when the road is muddy to prevent the tire skid; In other cases, it is disabled, or it is easy to cause early wearing for tires and drive train.
7. In the process of driving tractor, the driver is not allowed to step on brake pedal or clutch pedal, in order to mitigate early wearing of brake or clutch.
8. The tractor equipped with agriculture implement moves forward on the road, adjust top link of suspension device to shortest status, and regular limited rod to prevent implement swing from side to side. While tightening locknuts on the top link and limited rod to ensure driving safety and alleviate the risk of machines and implement damage.
9. If the implement articulated to the tract displaces, lock it up tightly; Descend the implement onto the ground before the driver leave tractor in order to mitigate the risk of machine and implement damage.
10. During maintenance, it is essential to select eligible parts and components in order to ensure the normal service life of tractor.

Unscrew radiator cap

When the engine is still hot, be careful of unscrew the radiator cap. After Operating for several minutes, deactivate the engine, and then loose radiator cap to the first gear. Afterwards unscrew the cap until the pressure is released.

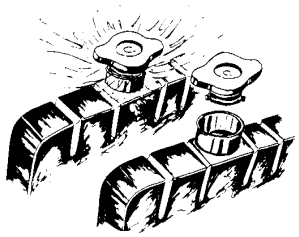

Fig. 1-14 Unscrew radiator cap

When repairing electric parts

1. Pull out the key for the electric lock switch.
2. Cut off the main power switch for the battery before electrical appliance maintenance.
3. When repairing tractor by electric welding, it is necessary to disconnect ground wire from battery and unplug large connector from engine, hydraulic part computer controller (if equipped), or it is easy to cause damage of battery, controller and instrument cluster.

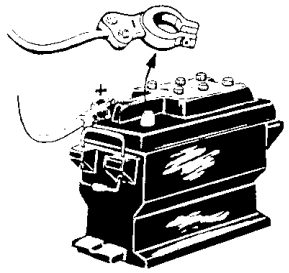

Fig. 1-15 Repair of electric parts

In the case of tractor abnormities

1. Do not allow tractor to work with “sick”, particularly in the cases of free or super-low oil pressure, overtop water temperature or unusual noise and odor, immediately stop for check and troubleshoot problems.
2. During lubricating maintenance and field adjustment, deactivate the engine.

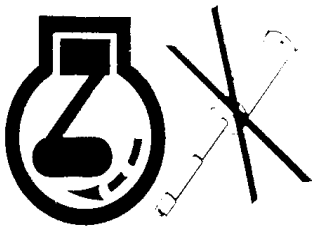

Fig. 1-16 In the case of tractor abnormities

Hoist the tractor

Allowed hoisting position in the front;

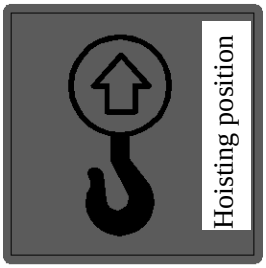

Fig. 1-17 Hoisting symbol of tractor

Safety rules when the tractor is unattended

1. Shift to neutral gear and place hydraulic control stick to neutral position.
2. Descend lifter or tow articulated device onto the lowest position.
3. Engage parking brake.
4. Remove engine ignition key from dashboard.
5. Choke up rear wheel with triangular plug block if stopping on the slope.

1.2 Safety warning signs

Notice:

1. Keep the safety warning sign clear and visible. If there is dirt, flush them out with soap water, and wipe up with soft cloth.
2. If the safety mark is missing or unclear, timely contact the dealer or manufacturer to reapply for register or replace.
3. To replace the part labeled with safety warning sign, the used part needs to be replaced with safety warning sign.
4. The terms prompted in safety warning sign refers to personal safety, and must be strictly enforced.

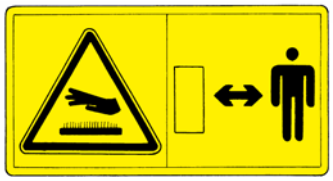

Fig. 1-17 Safety warning ID IV

Meaning: when operating, you need to keep a certain space with hot surface of machine to prevent injury.

Paste location: outside of muffler and tank side.

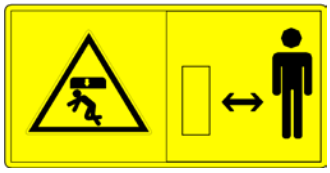

Fig. 1-18 Safety warning sign II

Meaning: when operating, you need to keep a certain space with tractor to prevent injury.

Paste position: Rear end of mudguard

Fig. 1-19 Safety warning sign VI

Meaning: It is not allowed to be seated at the places other than seats to prevent shading driver’s sight and causing injury.

Paste location: On the front side of left and right mudguard.

Fig. 1-20 Safety warning sign III

Meaning: When lifter lever control mechanism is operating, move into areas far away top link lifting area.

Paste position: Rear end of mudguard

Fig. 1-21 Safety warning sign I

Meaning: Prior to repair, maintenance, adjustment, shut off the engine, and pull out startup key. Operate as specified in the manual to prevent injury.

Paste location: front side of instrument desk.

Fig. 1-22 Safety warning sign IX

Meaning: When the engine is operating, never open or dismount safety protective cover, and Keep hands outside working site in order to prevent injury.

Paste location: on the protective cover of engine.

Fig. 1-23 Safety startup mark

Meaning: The driver shall start engine on the driver’s seat. Disable startup of engine By short-circuit on the starter side in order to prevent injury;

Paste location: on the front side of instrument desk.

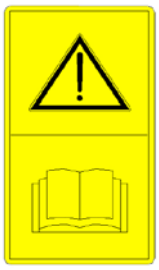

Fig. 1-24 Read manual mark

Meaning: To prevent injury, read through the user manual to understand the meaning of safety marks without Text description.

Paste location: on the front side of instrument desk.

Meaning: To prevent injury, touch with it only if all the parts of machine completely stopped;

Paste location: On PTO (power take-off shaft) g protective cover.

Fig. 1-25 PTO safety mark

Fig. 1-26 Battery mark

Meaning: During maintenance of battery, look up the user manual to understand appropriate Specification for maintenance so as to prevent injury.

Paste location: on the upper surface of battery.

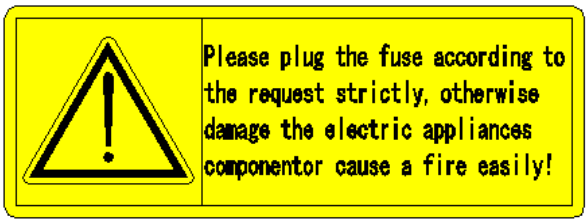

Fig. 1-27 Fuse safety warning sign

Meaning: refer to Fig. 1-27.

Paste location: near electric box.

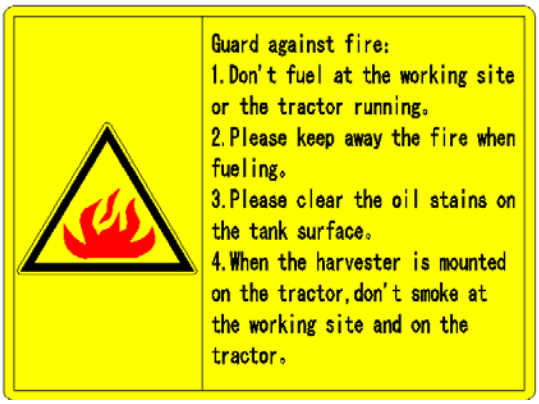

Fig. 1-28 Refueling fire proof mark

Meaning: refer to Fig. 1-28.

Paste location: near oil port on the fuel tank

Fig. 1-29 PTO safety mark

Meaning: refer to Fig. 1-29.

Paste location: near PTO shaft.

Fig. 1-30 Air braking warning sign

Meaning: refer to Fig. 1-30.

Paste location: on the surface of gas tank.

Fig. 1-31 Safety startup warning sign

Meaning: refer to Fig. 1-31.

Paste location: Front side of the instrument desk

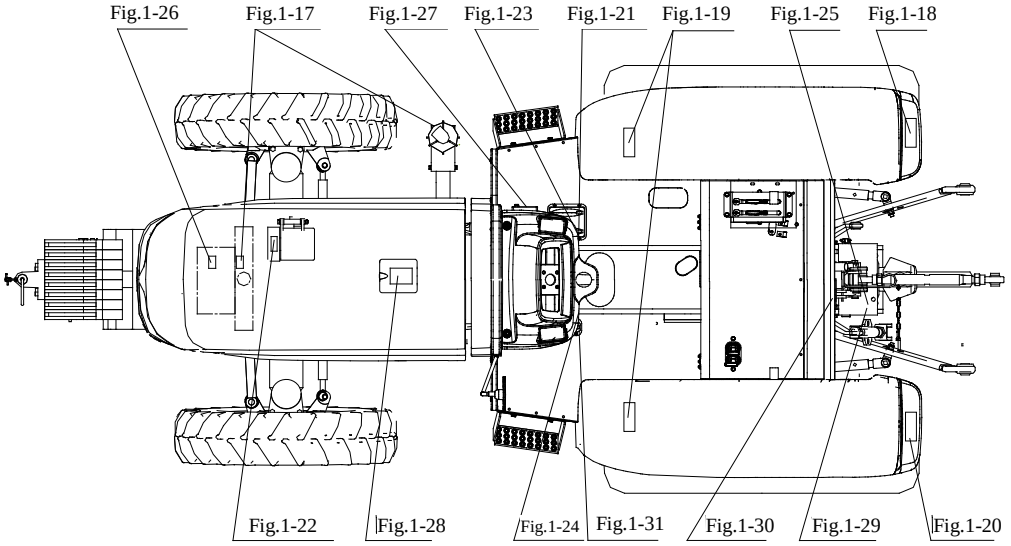

Fig. 1-32 Schematic diagram for warning sign pasting

https://truckmanualshub.com/

2 Product Identification

Product nameplate

The product nameplate is an important mark used for effective identification. It is located on the left side of instrument desk in the cab of tractor. When the tractor runs in service, the responsible person will check this nameplate. Do not lose product nameplate, and keep it clear.

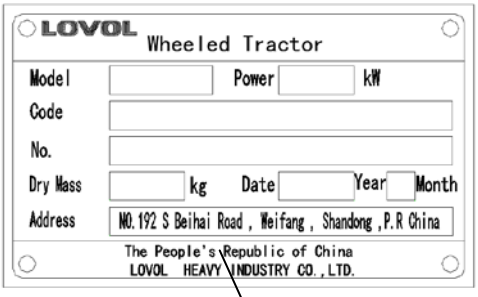

1

Fig. 2-1 Product nameplate

1. Product nameplate

Engine information

The product nameplate of engine is an important mark used for effective identification of tractor power supporting device. It is located under tractor guard hook. The engine nameplate is equipped on the engine. When the tractor runs in service, the responsible person will check this nameplate. Do not lose product nameplate, and keep it clear.

1

Fig. 2-2 Engine nameplate

1. Engine nameplate

Machine model and manufacturing number

When the tractor is shipped out of factory, machine model and ex-factory manufacturing number is marked on the left side of transmission gear housing, as shown in right Fig. 2-3.

1

Fig. 2-3 Manufacturing number

1. Manufacturing number

3 Operation Instruction

Attention: Operate the tractor properly to fully play its performance, reducing tractor wears and accidents as well as guaranteeing the completion of high-quality, high-efficiency, low-consumption and safe field and road operations of the operator.

Table 3-1 Common marks and symbols

Symbol	Implication	Symbol	Implication	Symbol	Implication
	Safety warning sign		Four-wheel drive		Horn
	High beam		Low beam		Fast
	Oil pressure		Battery charging condition		Slow
	Direction lamp		Washer		Position lamp
	Engine preheating		Rear wiper		Wiper
	Air filter blockage warning		Hydraulic oil filter		Air brake failure/fault
	Engine coolant temperature		Fuel volume		Parking brake
	Differential lock		Hazard warning		Brake fluid warning

3.1 Product description

This manual describes usage, technical maintenance, adjustment, fault and troubleshooting and so on for LOVOL series wheeled tractors.

LOVOL series wheeled tractor is of multi-purpose medium-scale agriculture tractor, featured with compact structure, handy operation, flexible steering, large towing force, and convenient maintenance etc.

3.2 Tractor maneuvering mechanism and instrument

3.2.1 Tractor maneuvering mechanism

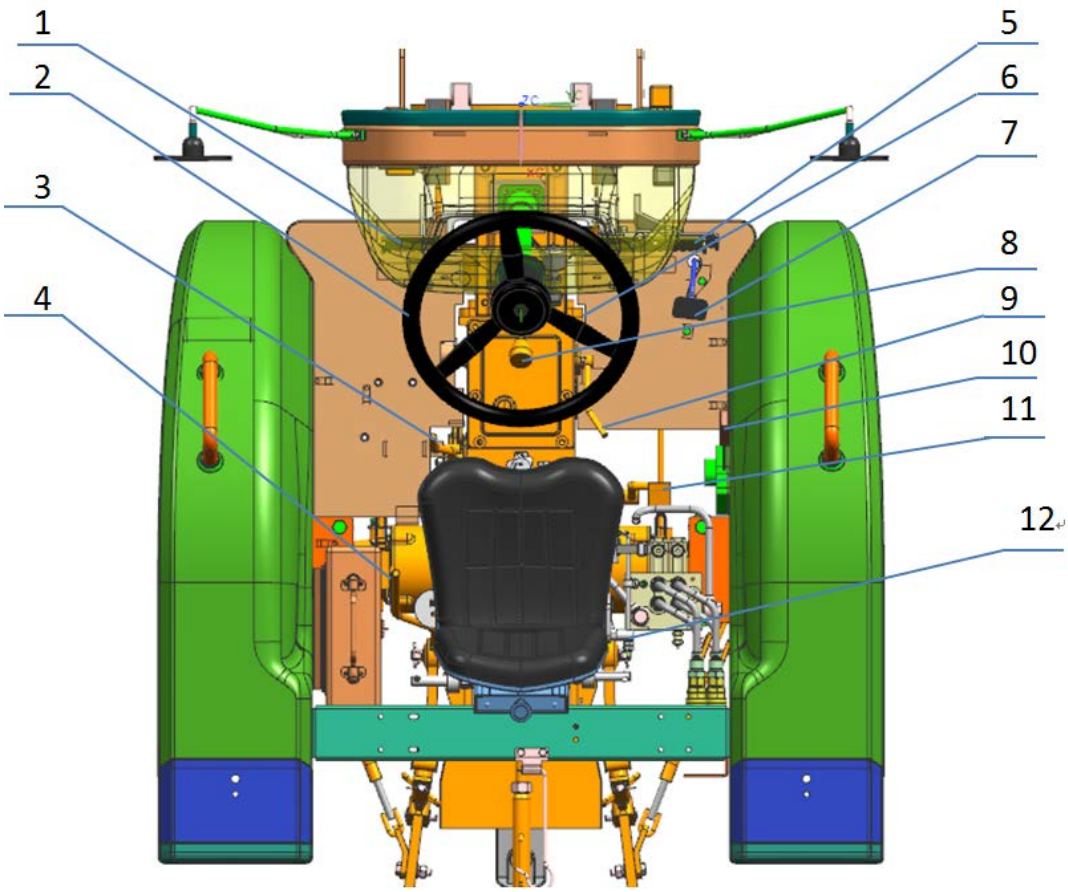

Fig.3-1 Tractor maneuvering mechanism

1.Clutch Pedal 2. Steering wheel 3.Front drive axle joystick 4. Power takeoff gear shift lever 5.Brake pedal 6. Parking brake lever 7. Foot accelerator pedal 8. Main gear lever 9. Auxiliary gear lever 10. Manual accelerator joystick 11. Differential lock joystick 12. Distributor joystick

3.2.2 Combination instrument and switch

Combination instrument

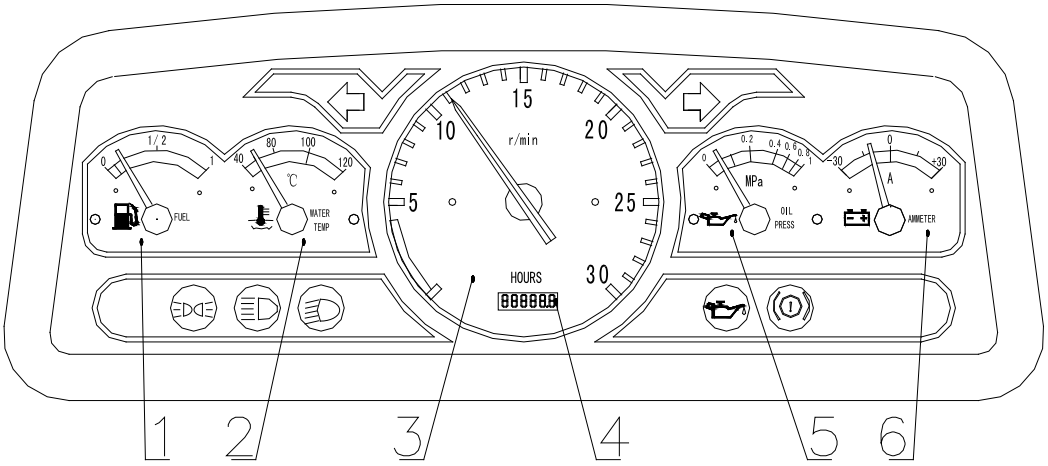

Fig.3-2 Combination instrument

1. Fuel gauge 2. Water temperature gauge 3. Tachometer 4. Timer 5. Oil pressure gauge 6.Ammeter

Warning Indicator System Table for Combination Instrument

Left turn signal	Right turn signal	High beam	Low beam	Oil pressure indicator	Small lamp	Air brake

Fig.3-2 Combination instrument

Important: During tractor working, the driver should take note all kinds of instruments and indicators. If abnormal, please immediately park and repair.

Left side rocker switch combination

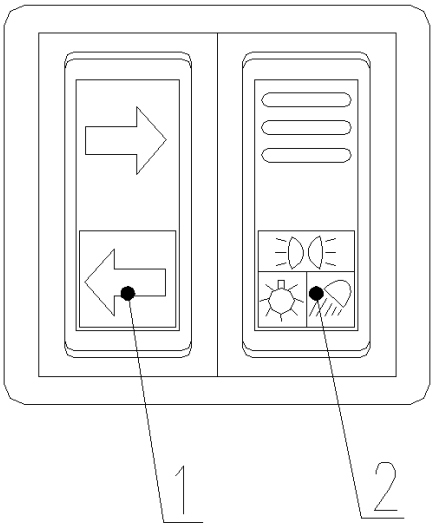

1 Switch for direction lamp；
2 Switch for work lamp

Fig.3-3 Left side rocker switch combination

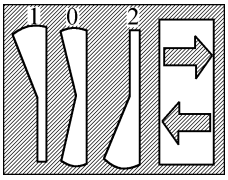

Turn signal switch

Position “1”: switch on the left turn signal lamp; Position “0”: power off; Position “2”: switch on the right turn signal lamp.

Fig.3-4 Turn signal switch

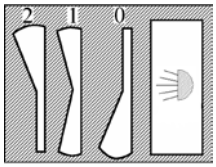

Switch for work lamp

“0”: Power off ; “1”: Position lamp on ; “2”: position lamp and backup lamp on

Fig. 3-5 Switch for work lamp

Right side rocker switch combination

1 Dimmer switch;
2 Hazard warning switch;

Fig.3-6 Right side rocker switch combination

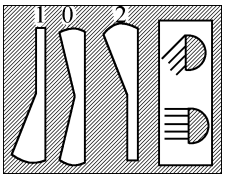

Dimmer switch

Position “2”: high beams light up; Position “0”: low beams light up; Position “1”: standby.

Fig.3-7 Dimmer switch

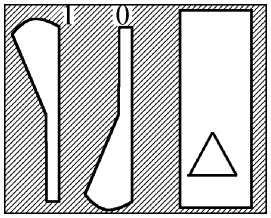

Hazard warning switch

Position “1”: turn signal lamps in front and rear and at left and right, left and right turn signal indicator lamps on the instrument and indicator lamp on the hazard warning switch all light up. When the tractor is parking on a highroad due to faults or other causes and it is necessary to warn vehicles and passers-by in front and behind via activating this function in order to avoid accidents.

Fig.3-8 Hazard warning switch

Horn switch

Horn switch is located at the center of steering wheel. The horn switch could be turned on by pressing it, as shown in following picture.

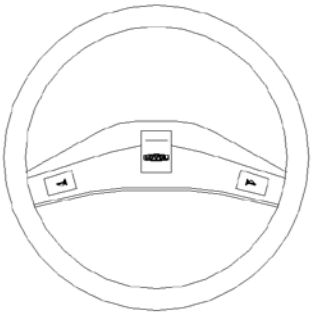

Fig.3-9 Horn switch

Ignition lock

Clockwise rotate the preheat start knob to ACC to turn on the auxiliary electrical appliance. Clockwise rotate it to ON to turn on the control circuit. Clockwise rotate it to H to turn on the preheating device. After preheating, rotate it to ST to start engine. After engine is started, immediately loosen it, the key will automatically return to ON. The time of key staying at ST should not more than5s to avoid engine burnout.

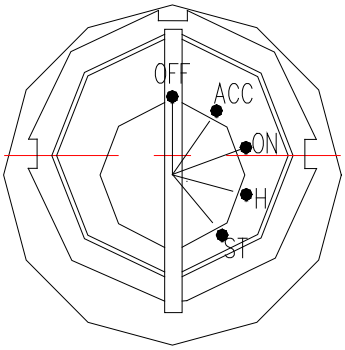

Fig.3-10 Ignition lock

3.3 Engine start

Warning: Prior to operations, please check the tractor carefully and comprehensively to eliminate hidden dangers for effective prevention of accidents.

3.3.1 Preparations for engine start

- Before starting, please carefully check each part for tight and reliable connection, each control mechanism for normal work, pipe joint for tightness and there should not be any leak of oil, water and air.
- Check the lubricant level in the engine oil sump, gearbox, rear axle and hydraulic system. The radiator should be filled up with cooling water and fuel tank should be filled up with fuel.
- The handle of fuel tank pipeline switch should be paralleled to oil pipe to open the fuel pipeline.

Figure 3-11 Hand throttle

- Check the gearbox control lever and PTO control handle. Position the main gear lever, power output control handle, front drive axle control handle respectively to neutral gear position. Position the distributor control handle to lowering position.
- Pull the flameout cable locking device for flameout cable return. At the moment, the injection pump is locating at oil supply position.
- Hand throttle is set as semi-open state.
- As to the new, overhauled or long-period stored tractor, before starting, please vacuum oil (fuel) pipe to ensure diesel engine smooth starting. The method is as follows: loosen the air bleeding screw on the diesel filter, use hand pump to vacuum fuel pipe from the fuel tank to diesel filter until there is no bubble emerged in bled fuel. Then tighten the bleed screw on the diesel filter, loosen the bleed screw on the fuel injection pump. Use the similar method to drain air until there is no bubble emerged in drained fuel.

Important:

1. Remove foreign matters on water tank grille to prevent the engine from faults caused by poor heat dissipation;
2. Since heat dissipation condition is poor during field operations, when the tractor is equipped with a packsack harvester, it is recommended to install an auxiliary radiator at a proper position as to guarantee long-term continuous engine operation.

3.3.2 Start the engine

Important:

1. After engine is started, please immediately let your hand goes to allow the key automatically return back to ON (see ignition key picture). Otherwise, the started engine will reversely start the starter, and therefore

damaging it.

2. Starting time should not be more than 5s each time and starting interval should not be less than 15s each time. To maintain the battery charging performance, continuous times of starting engine should not exceed 3 ones. If failure after successively 3 times, please find out the cause and start again.

3.3.2.1 Battery starting

- Ambient starting (over -5 ℃): Turn the ignition key clockwise to “ON” to turn on the circuit. Then rotate it again to “ST” to start engine. After engine is started, please immediately let your hand go, the key will automatically return back to “ON”. As tractor has safety starting switch, firstly depress down the main clutch pedal, then rotate the key to start engine.
- Pre-heat starting (only limited to tractor type with pre-heat circuit)

Use the pre-heat to start the engine at lower temperature (below -5 ℃), when cold start is difficult. Place the hand throttle to full position. Rotate the starting switch clockwise to Preheat for hold it for (15~20) s and then to ST to start engine. After engine is started, the key will automatically return back. At last place the handle throttle to small-openness position.

As to the tractor without pre-heat circuit, before starting engine in severely cold winter, fill the radiator with over 90 ℃
Drain the oil in the oil sump (it is best to drain it when still hot) into a container with cap to be heated to (70~90) ℃. Then refill into oil sump. Never heat the oil sump.

3.3.2.2 **Starting engine by towing tractor:** when towing tractor, please engage high III-gear or high IV-gear. To ensure safety, the speed of towed tractor should not be more than 15km/h.

Note: In the case of tow start the tractor, once the engine operates, depress the main clutch pedal immediately and reduce throttle opening.

3.3.3 Engine running

- After engine starting, please immediately decrease the throttle openness to allow the engine at idle speed. At this time, check the engine oil pressure and ensure the oil pressure gauge pointer is pointing to green range.
- After startup, the engine should not run at full-load immediately. It is correct to let the engine to be heated at middle speed and with no load. Do not increase to max. speed or put it into full-load work until the coolant temperature is up to 60 ℃ or more.
- Slowly increase or decrease engine speed and load, especially to justly started engine. Do not run at high speed by “full throttle”.
- During running, always check the oil pressure and coolant temperature. The indicator shall stay in green area during the operation.

Important: During engine running, the oil pressure gauge pointer should not point to red range at left side at any

condition. Otherwise troubleshoot it.

3.4 Start the tractor

- Keep the engine runs with a low speed, depress the clutch pedal and then place the gear lever of gearbox to a required position.
- Press the Parking brake handle A.
- Whistle and determine there are no obstacles around.
- Increase engine speed gradually and release the clutch pedal slowly for smooth starting of the tractor. After starting, release the clutch pedal rapidly to avoid clutch slips.

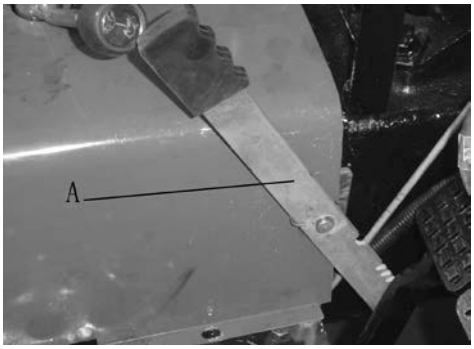

Figure 3-12 Start the tractor

- Gradually depress down the accelerator to allow the tractor to reach the needed working speed.
- It is not allowed to reduce tractor traveling speed with the clutch half-engaged. Do not place your foot on the clutch pedal during driving to avoid wears of quick release lever and friction lining.

Important:

It is not allowed to start with high gears engaged to avoid gear impact of the gearbox drive gear and clutch early wears. Prior to starting, it is necessary to release the parking brake to avoid operating component damages.

3.5 Tractor steering

3.5.1 In case of turn during tractor traveling, firstly press the horn switch on the steering column to give the signal, then turn the tractor. If the vehicle traveling at high speed, please decelerate. The tractor should be turned slowly and early at the slow curve with the steering wheel less turned and then less returned. In the case of a sharp turn, turn the steering wheel later and quickly and turn and return it largely.

3.5.2 In the case of tractor small turning or turning on soft ground, there may be steering failure due to front wheel sideslip. At the moment, turn the steering wheel and depress the brake pedal at the corresponding side simultaneously to help steering.

Warning:

1. When tractor traveling at high speed, do not use the one-sided brake sharp turn. If the front wheel sharp turning, causing the relief valve sounding squeak, the steering wheel should be returned back a little to avoid hydraulic steering system overload for a long time. Otherwise doing so will lead to failure of steering and therefore accident.
2. In the case of tractor turning in field operations or prior to tractor reversing, it is necessary to lift operating components of the agricultural implement off the ground in order to avoid agricultural implement damages or casualties.

3.6 Tractor gear shift

3.6.1 8+2 gear:

- Main/Auxiliary gear shifting is controlled by 1 gear lever to realize the 8 gears. The main gear lever A can be shifted to 4 gears(1,2,3,4) and 1 reverse gear R; the auxiliary gear lever B can be shifted to 2 speed zone (L is low speed zone, H is high speed zone).
- When depressing the clutch pedal, push the auxiliary gear B lever from the neutral position backwards to low speed gear L or forwards to high speed gear H.
- Depress the clutch pedal, push the shifting lever A forward from neutral position to shift to gear 3 or pull lever A backward to shift to gear 4. Shift the lever A to the right side and then push it forward to shift to gear 1 or pull lever A backward to shift to reverse gear R. Shift the lever A to the left side from the neutral position and push it forward to shift to gear 2.
- Proper traveling speed not only get optimal production and economy, but also prolong the tractor service life. It is not allowed for the tractor to work at overload state frequently. There must be some margin of power. In case of field work, it is best for engine to run at about 80％ of rated load. If tractor works with light-duty load and at not high speed, engage high 1gear and use small throttle to save fuel consumption.

3.7 Differential lock operation

Differential lock operation

During tractor traveling or operating, if it is trapped or slips and the tractor fails to move forward, you can engage the differential lock according to the following procedures for rigid connection of left and right drive shafts and then drive out the slippery district with a constant engine speed.

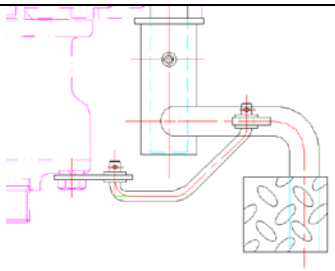

Figure 3-14 Differential lock operation

- Depress the clutch pedal, and engage the low speed gear.
- Pull the throttle control handle to the position for the max. fuel supply.
- Put foot on the differential lock pedal A located on the right-lower seat.
- Smoothly loosen the clutch pedal to slowly move the tractor.
- After moving out of slipping section, release the differential lock pedal A to allow it return in position.

Important: It is not allowed to use the differential lock during normal traveling and turning of the tractor to avoid part damages and quick tire wears.

3.8 Front drive axle usage

If LOVOL 4DW tractor working in field with heavy load or working in damp and soft soil, the tractor traction performance will be poor if driven only by rear wheels. Therefore, hooking the front drive axle could increase tractor tractive force, reduce the tire slipping rate and accordingly increase tractor adaptability. In order to facilitate to engage and separate the front drive axle, please follow the steps:

Connection of front drive axle

Depress down the clutch pedal, engage the gearbox gear and then slowly release the clutch pedal. When tractor slightly moving, timely pull the front drive axle control handle upwards to engage the front drive axle.

Disconnection of front drive axle

If disengaging front drive axle, depress down clutch pedal, push its control handle downward to release the front drive axle.

Important: If the tractor traveling on the pavement, it is not allowed to engage front drive axle. Or else it will give rise of early wear of front tires, increasing fuel consumption. You could engage the front drive axle only on slippery road or in rainy/snowy or if going long hill, the rear-wheel is easy to skid. After that, the front drive axle should be disengaged.

Note: When the front tires wear quickly and the tire pattern on the left and right side have uneven wearing during transportation operation of the tractor, exchange the left and right tires according to the circumstances.

3.9 Tractor braking

3.9.1 Tractor braking

- In general, it is necessary to reduce the throttle opening firstly, depress the clutch pedal and then depress the brake pedal gradually according to specific condition to stop the tractor stably.
- In the case of emergency stop, depress the clutch and brake pedals simultaneously. It is not allowed to depress the brake pedal alone to avoid brake friction lining rapid wears or engine flameout.
- If equipped with trailer brake, please adjust the length of brake valve lever to firstly make trailer braking and then tractor.

3.9.2 Left and right brake pedal interlocking

When the tractor is running on the road, lock the left and right brake pedal together with interlock board.

Warning:

1. Before driving the vehicle, please make sure the brake can normally work. Otherwise, there will be major accidents like brake failures.
2. When the tractor traveling on pavement, do interlock the left and right brake pedals to avoid tractor offset and even casualty.

3.10 Tractor stopping and engine flameout

- Reduce throttle opening and tractor traveling speed.
- Depress clutch pedal and then depress brake pedal. When the tractor stops, place gear lever of the gearbox at neutral position.
- Release the clutch pedal and brake pedal and reduce the throttle opening for engine idling.
- Pull flameout control lever backward, oil pump stops supplying oil and the engine shuts down immediately. After that, push the lever to the position for oil supply.
- Turn the ignition key to OFF to turn off all power supply.

3.11 Tire use and removal and installation

3.11.1 Tire use

- Tire, as important parts, must be carefully used and serviced to extend its life as long as possible.
- There is always a rated load value for a tire. If exceeding the rated value, the tire will severely be distorted, excessive bending of tire side is prone to crack. Tire body fabric and cushion will be prone to adhesive failure or the fabric is loose until tire is broken down, especially on the irregular pavement or cracked by obstacles.
- Inflated tire pressure should meet the requirements. Too low or too high pressure will shorten the tire life. Too low pressure will distort the tire, quicken wear out tire surface and even quickly grind the inner and outer tubes. Finally the core will be cut off and traveling resistance will be increased. Too low of tire pressure may cause heavy control; too high of tire pressure may excessively stretch the tire fabric, possibly causing crack, quickening tire wear and increasing the tractor body vibration. It is better to slightly decrease tire pressure if field working. It is better to slightly increase tire pressure if traveling on pavement for long period. The tire pressure should be measured by barometer at ambient temperature rather than when the tire is hot. Improper driving will cause early wear or damage of tires. During traveling, please avoid crossing the obstacle at high speed, forcefully braking and sharp turning. If traveling on macadam pavement, please avoid slip turning as possible as you can.
- During traveling, please keep the tires away from chemical corrosion substance such as oil, acid or alkali etc. It is not allowed to expose to sunshine to avoid the rubber aging.
- Frequently check that front wheel alignment and tie-in are in position to avoid tire irregular wear. If the wear of tire tread is not homogeneous, exchange the left and right tires.

Important:

Front and rear tire pressure of 4DW tractor should stay the same to avoid abnormal wear of tires.

3.11.2 Tire removal and installation

Tire removal

When removing and installing the tires, please use special tools rather than sharp tools (such as screwdriver) and large hammer to avoid piercing tires or damaging tire edge and wheel rim.

If removing tube, please deflate, press the outer tube edge into the rim groove, use the crowbar to lever the tire edge around the core out of rim and then use another crowbar to lever the whole tire edge. After taking out the inner tube, use the same method to lever out the other side of tire to take off the outer tube.

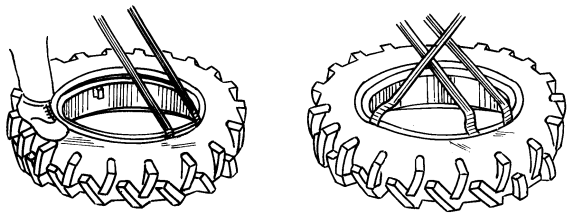

Fig.3-15 Tire removal

Tire installation

- During installing, coat a thin layer of talcum powder between the inner tube and outer tube after cleaning each part.
- Put the tire on flat ground and install the outer tube by foot or lever. The inner tube should be put into outer tube (slightly shim up the outer tube) with lead wire to fix the core into its hole to avoid skipping.

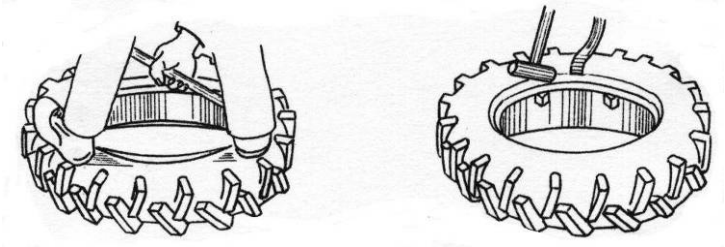

Fig.3-16 Installation

- Use crowbar to lever the other side of outer tube into rim (you may apply greater force at last phase, so use hammer to gently hit crowbar.)
- At last check that core position is upright and the tire edge and rim is closely attached.

  If inflating, check whether the inner tube is pierced and use hammer to tap outer tube. It is better to inflate to desired pressure, then deflate a half of air to inflate again. Thus the inner tube could normally inflate and eliminate puckering of outer tube.

Warning: Never remove the bolts of tire, drive wheel hub and wheel rim under inflation state, otherwise the bolts may be rushed out to hurt people.

3.12 Counterweight usage

The counterweight is dependent on tractor operating requirement. If the tractive force is needed to be increased for working in dry farm or transporting, please increase the counterweight. If the tractor is used in mountainous or hilly area, properly increase front counterweight to avoid “Wheelie” during work..

Rear counterweight is round cast iron piece with each piece mass of 28kg. 2 pieces can be installed at the left or right. Thus the total mass of rear counterweight is 112kg.Front counterweight mass is 9kg each piece. 4 pieces can be installed with total weight of 36kg.

Caution: If removing the rear wheel with rear counterweight, please remove the rear counterweight firstly to avoid casualty caused by its instability.

3.13 Drive's seat adjustment

LOVOL series tractor seats can be adjusted forwards and backwards. Pull the adjusting handle A on the left of seat outwards (as shown in figure 3-17), meanwhile move the seat forward or backward to needed position. Then the handle A can be released.

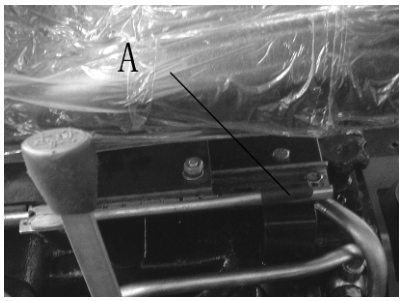

Fig.3-17 Drive's seat adjustment

Caution: For safety, you can adjust the seat only when the tractor is fully stopped to avoid potential hazard.

3.14 Use of hydraulic lifting system

TE series tractor employs semi-separated hydraulic lifting system and two kinds of adjusting types: position adjustment and height adjustment. The agricultural implement can be lifted or lowered by the control handle on the distributor. Pushing the handle forward can lower the agricultural implement; Pulling the handle backward can lift the agricultural implement. For the adjustment of agricultural implement at the height/lowest position, see "Hydraulic lifting system adjustment"

3.14.1 Position adjustment

If equipped with agricultural implement without ground roller, please employ position adjustment. The tilling depth is set by the descent stop position on the return-push rod. When using, the descent stop should be fixed at preset proper position to allow the agricultural implement lower to preset tilling depth. At this time the retaining pin will stop the descent stop to push the handle back to neutral position. Finally the agricultural implement will work at this tilling depth (for adjusting method, see "Hydraulic lifting system adjustment")

3.14.2 Height adjustment

If equipped with agricultural implement with ground roller, please employ height adjustment. The tilling depth is controlled by the height from the ground roller to the bottom of plough. When using, lower the descent stop to lowest position to have the agricultural implement set at desired tilling depth. The handle is still at descent position (For adjusting method, see "Hydraulic lifting system adjustment").Finally the agricultural implement will work at this tilling depth.

Note: The two return stop position on the push rod can be adjusted according to agricultural requirements and equipped agricultural implement. The agricultural lifting/lowering height varies depending on the stop position on the push rod. The lifting stop and lowering stop is respectively control the lifting and lowering height of agricultural implement.

3.14.3 Descent speed adjustment

The agricultural implement lowering speed can be controlled by adjusting descent speed .Select proper descent speed to avoid damaging agriculture implement caused by impact when agriculture implements contacting with ground. When delivery, the descent speed adjusting valve is preliminarily adjusted. The driver can readjust it according to weight of agricultural implement and ground hardness.

- Clockwise rotating the adjusting valve A can decrease the descent speed of agricultural implement.
- Anticlockwise rotating the adjusting valve A can increase the descent speed of agricultural implement.

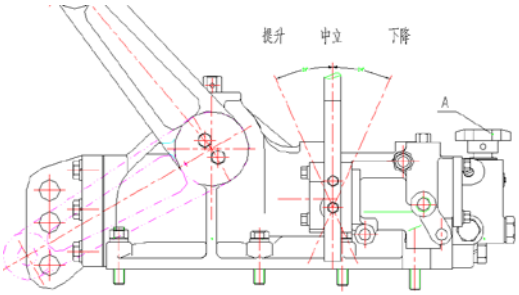

Fig.3-18 Regulating valve schematic

Caution: When the tractor with agriculture implement traveling for a long distance, the agriculture implement should be locked by using hydraulic lock to avoid it sudden falling and eventual accident caused by moving distributor control handle.

3.14.4 Use of Linkage

To ensure the consistent of ploughing depth, the plough should be adjusted at the longitudinal and horizontal position.

- Longitudinal adjustment: adjust the length of upper pull rod A to keep the plough frame level at longitudinal orientation. If the front furrow is ploughing deeper than rear one or the plough heel leaves ploughed groove, the upper pull rod should be extended. If the rear furrow is ploughing deeper than front one, or the plough heel compacts the ploughed groove, the upper pull rod should be retracted.
- Horizontal adjustment: adjust the length of left/right lifting rod to keep the plough frame level at horizontal. Extend the right lifting rod B to increase the tilling depth of 1st furrow; retract the right lifting rod to decrease the tilling depth of 1st furrow. Generally, the left lifting rod C is not needed to adjust. It is only used when the adjusting amount of right lifting rod is insufficient to keep the depth consistent.

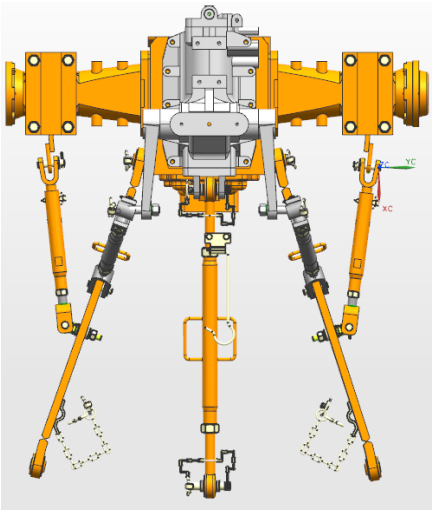

Fig. 3-19 Linkage

Important:

1. When tilling, the deflective traction of agricultural implement is not allowed by fixing limit lever to avoid damaging the linkage.
2. No steering with the agricultural implement not lifted to avoid damage of linkage. It is only allowed to steer the tractor after furrow is lifted.

Note: when the tractor turning at the field edge, the limit rod is mainly used to avoid big swing of lower link that could cause impacting the rear wheel of tractor. When agricultural implement working, the limit rod is slack to allow some swing amount between the tractor and implement.

3.14.5 Use of PTO

3.14.5.1 Use of PTO

Engagement and cutting-off of PTO shaft is controlled by the lever at the left back side of transfer case. If pushing the handle forward, the high speed gear is engaged; if pulling the handle backward, the low speed gear is engaged.

The concrete method is as follows:

Dismantle the hitched device and PTO protection cover to install the needed agricultural implement;

Place the PTO gear shifting handle to the needed gear position.

Depress the clutch pedal to release the clutch and shift the PTO shaft operation lever to desired position.

Slowly loosen the clutch pedal to let the engine run at low speed to make a check of normal work. Finally the tractor can work again;

In case the PTO is unnecessary, installed the shield of PTO shaft

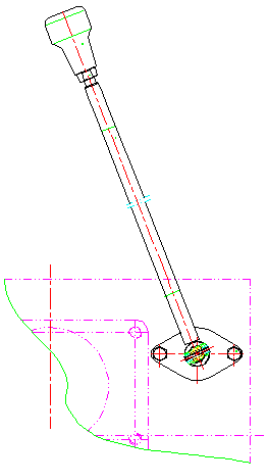

Fig. 3-20 Operation of PTO

3.14.6 Use of electrical equipment

TE series tractor electrical system is of 12V, negative ground and double-wire system. For the electrical system composition and circuit, please see fig.3-21.

3.14.6.1 Battery

Battery is used to accumulate the electric energy generated from the generator. If the generator does not work or rotates at the low speed, the battery could supply to tractor electrical equipment with accumulated electric energy. If the generator is overloading for short time, the battery services to supply power.

- 95D31 maintenance-free accumulator can be optionally installed.
- Clean the dust and sludge on the battery housing to avoid electric leakage. Make a check of crack and electrolyte leakage to keep the pole and wire well connected. The air vent of plastic cover should be unclogged to avoid explosion.
- Every time, the starting time should not exceed 5s to avoid electric discharging excessively.
- If the tractor is not used for long time, please unload the battery to charge and maintain it.

3.14.6.2 Generator

- The generator should be matched with the regulator.
- Silicon rectification generator adopts negative "—" ground. Do not reversely connect the negative/ positive poles of the generator, regulator and battery. Otherwise, it will burn out the generator and regulator;
- Never use the method of short-circuit fire save electricity to check whether the generator is working.
- When parking, take out the ignition key to disconnect the connection between the generator and battery, avoiding discharging for long time.

3.14.6.3 Starter motor

- The starter is allowed to work continuously and for long time. For this reason, the starting time is not allowed to exceed 5s to avoid damage of starter.
- In the moment of starting, if you hear clean crash caused by meshing of pinion and flywheel gear ring, please immediately return the key and then try again.
- During starting, if the key is returned back yet the starter is still running, please immediately shut down the engine and try again when trouble is solved.

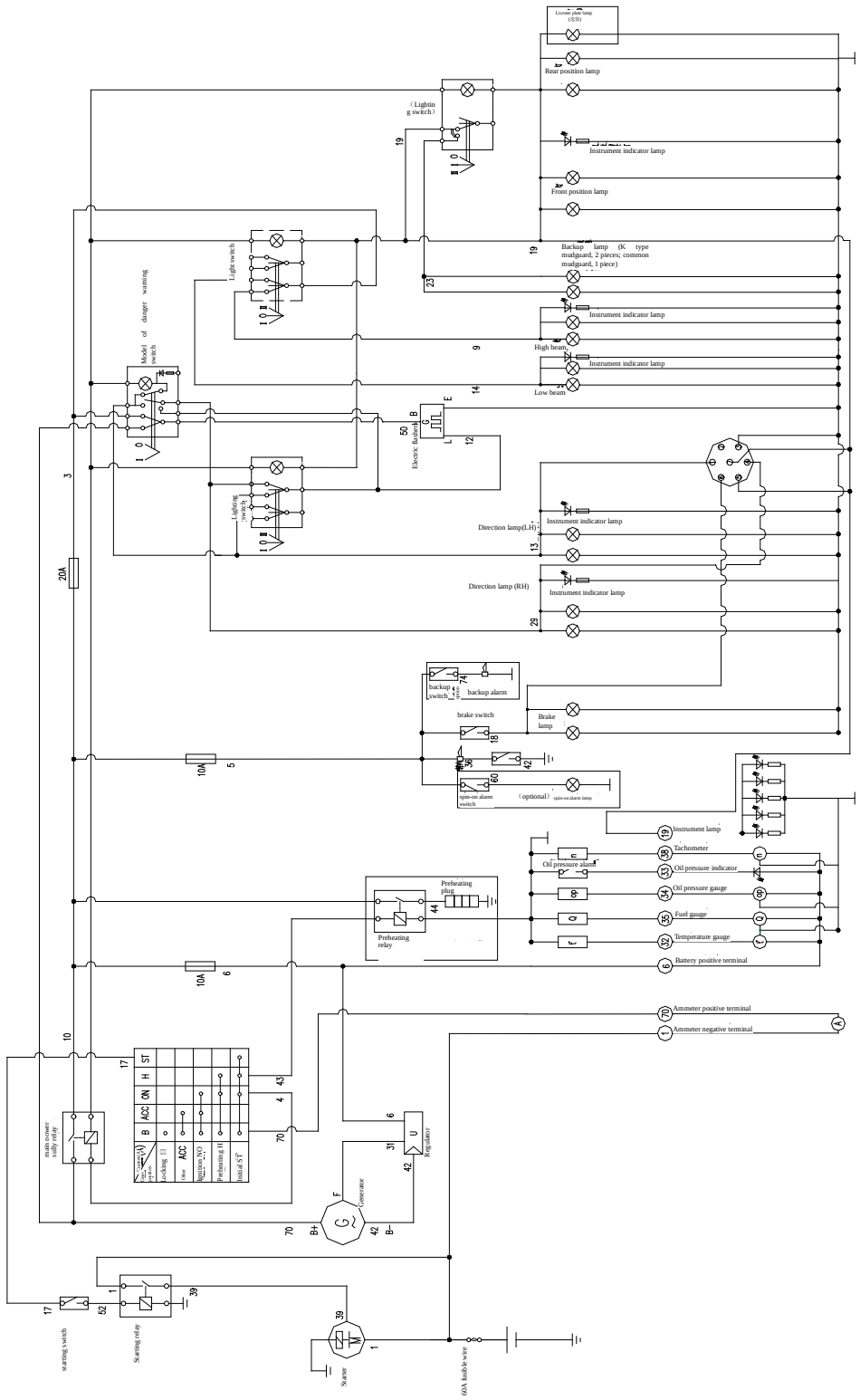

Fig.3-21Circuit of electrical equipment

3.15 Tractor running-in

Before using the tractor, it should run for a time of period according to specified lubricating, speed and load conditions. Meanwhile, the tractor should be checked, adjusted and maintained for normalization of its technical state. Such a series of operations is called running-in.

3.15.1 Preparations for running-in

- During running-in, carry out each shift and every 50h technical maintenances (see this manual 4 Maintenance Manual)
- Check and tighten all bolts, nuts and screws outside of tractor.
- Add the grease into the oil cup on the front wheel hub, front drive axle kingpin and water pump shaft. Check the oil level in the engine oil sump, drive system, lifter, main drive of front drive axle and final drive, fill it if necessary.
- Fill up the fuel and coolant met required grade.
- Check whether the tire pressure is normal.
- Ensure all electrical element circuits are correct and reliable.
- Place each handle at neutral.

3.15.2 Engine idling running-in

Carry out engine running-in with no load for 15min.Start the engine according to order descried in “Diesel Engine Use and Maintenance Manual”: from the low speed (small throttle) to middle speed (medium throttle) then to high speed (full throttle). Run it for 5min in turn.

During the engine idle running-in, please carefully check the engine, air compressor, hydraulic pump for normal operation. If abnormal, please check if there is leakage of air, water and oil. Check the instrument for normal. In case of abnormal, please stop immediately, troubleshoot and then run-in again.

You can start the following running-in only the engine is normally working.

3.15.3 PTO running-in with no load

Place the engine accelerator control handle to medium throttle to keep the engine rotate at medium speed. PTO respectively works at the low speed and high speed for 5min to check if there is abnormal phenomenon. After running-in, the PTO should be placed at the neutral position.

3.15.4 Hydraulic system running-in

Start engine, place the throttle to medium position and control the distributor handle to lift or lower linkage for a few times. Check whether any component is normal or not. Then mount 300kg substance or equivalent agricultural implement to the linkage and allow the engine running at full throttle. Control the distributor handle to make the linkage lift or lower to full travel for 20 times or more. Check whether the hydraulic hitch system is fixed at max. height or desired position, needed time for lifting or lowering and any leakage.

With tractor at the same place, let the engine run respectively at the low, medium and high speed, whilst turn the steering wheel to the left and the right respectively 10 times. Then observe the servo of front wheel steering to the left and right. Inspect the sound for normal and whether steering wheel turning is easy and steady.

If any failures occur during running-in, please troubleshoot.

3.15.5 Tractor idling and running-in with load

As to the idle running-in, after the running-in of PTO and hydraulic hitch system, make sure the technical state of tractor is completely normal and then carry out the entire tractor running-in according to table 3-2. During no-load running-in, properly apply the single-side brake in turning with a low speed and test emergency brake application when running with a high speed.

After idle running-in, be sure the tractor technical state is normal and then carry out running-in with load. The load should be increased from lower value to higher value. The gear should be shifted from the low speed to high

speed. Please take note the following items during running-in:

- Observe the electrical equipments and all instruments reading for normal.
- Check the engine for normal running.
- Check the clutch for smooth engagement and complete release.
- Check the gearbox for easy and flexible gear shift without disordered gear engagement or automatic gear disengagement.
- Check the brake for reliable operation.
- Check the differential lock for reliable locking and unlocking.
- Check the front drive axle for reliable engagement and release.
- When faults are detected, eliminate them and then go on implementing running-in.

3.15.6 Technical maintenance after running-in

After tractor running-in, there will be some metal particles or contaminations mixed with lubricant of the drive system, lubrication system and hydraulic system. Therefore, it is necessary to carry out cleaning and change all lubricant and hydraulic system oil. Tractors are allowed to be put into service only after the completion of necessary technical maintenance.

Technical maintenance content is as follows after running-in:

- After stopping engine that is still hot, please immediately drain the oil in the engine oil sump and steering oil reservoir. Clean the oil sump, oil filter screen, filter screen from diesel filter, oil filter, air cleaner and steering oil reservoir. After replacing filter elements of diesel and oil filters. Fill the new lubricant as technically required.
- Also immediately drain the oil in the drive system, lifter and front drive axle to add proper light diesel engine or kerosene. Without starting engine, drag the tractor forward or backward at low speed for 3min. Or jack up the front and rear wheels to let them free of ground, rotate the front and rear wheels forward and backward for 3min, and then drain the cleaning solution timely. Dismantle the oil absorption filter of lifter to clean. After reinstalling, fill the drive system and front drive axle with the new lubricant as required.
- Please service the diesel engine according to “Diesel engine use and maintenance instruction”.
- Drain the cooling water, wash the engine cooling system with clean water and add new coolant.
- Check the toe-in of front wheel, clutch, free travel of brake pedal, adjust it if necessary.
- Check and tighten all bolts, nuts and screws outside of tractor.
- For adding the grease, please refer to technical maintenance sheet.

Important:

1. In the case of tractors just leave the factory or be overhauled, they should be put into service after running-in or their service life will be shortened.
2. Drivers should learn and master control method and usage of tractors before implementing tractor running-in. Otherwise, there will be accidents as results of misoperation.

Table 3-2 Running-in time at each phase（8F+2R chassis） Unit: h

Gear position	Forward gear								Reverse gear	
	Low speed 1	Low speed 2	Low speed 3	Low speed 4	High speed1	High speed 2	High speed 3	High speed 4	Reverse 1	Reverse 2
Idling	0.5	0.5	0.5	0.5	0.5	0.5	0.5	0.5	0.5	0.5
With trailer loaded with 1.2t goods, transportation				4	4.5	5	5	2.5		
With plough working in sandy land, ploughing depth:14cm		5	5	5	5	4				

Note: For 4-wheel driving tractor, all speed gears shall be engaged with front driving axle, except the high 4 speed gear.

3.16 Tractor common failures and troubleshooting

3.16.1 Chassis failure and troubleshooting

3.16.1.1 Clutch failure and troubleshooting

Table 3-3 Clutch failure and troubleshooting

Failure	Cause	Troubleshooting
1. Clutch slips.	(1) There is oil contamination on the friction lining and pressure plate (2) Friction lining excessively wears out or is burnout. (3) Spring pressure is too low. (4) Free travel of pedal is too short or there is no free travel. (5) Driven plate of clutch is serious distorted. 6) The heads of three release levers are not on a same plane.	(1) Clean it with gasoline and troubleshoot (2) Replace friction lining (3) Replace spring (4) readjust the free travel of pedal to specification (5) Replace driven plate of clutch (4) Adjusting to specification
2. The clutch could not be thoroughly released and engaging gives sound.	(1) Free travel of pedal is too long and work travel is too short. (2) Driven plate of clutch is serious warped. (3) The three release lever heads are not at the same level. (4) Crushed friction plate (5) Tight spline of friction plate	(1) readjust the free travel of pedal to specification (2) Replace driven plate (3) Adjusting to specification (4) Change the friction plate (5) Repair and adjust the spline
3. Tractor is jouncing when pulling out.	(1) The three release lever heads are not at the same level. (2) There is oil contamination on the friction lining and pressure plate (3) Driven plate is serious distorted. (4) The fixing bolts attaching the flywheel to clutch housing are loose.	(1) Adjusting to specification (2) Clean the friction lining and driven plate (3) Replace driven plate (4) Timely stop vehicle to troubleshoot

3.16.1.2 Gearbox failure and troubleshooting

Table 3-4 Gearbox failure and troubleshooting

Failure	Cause	Troubleshooting
1. Gear engagement is difficult, or failure	(1) Clutch is not thoroughly released. (2) Interlock link is too long (3) Shift block of gear lever seriously wears out. (4) Engaging sleeve end face and gear end face are worn out or damaged.	(1) Troubleshoot it according related means (2) Interlock link should be properly shortened. (3) Replace gear lever (4) Repair of replace it
2.Auto gear disengaging	(1) Interlock link is too short. (2) Shift fork shaft groove seriously wear out. (3) Spring pressure of interlock pin is insufficient. (4) The bearing on the gear shaft is worn out to have the shaft inclined. (5) Gear block spline wears out.	(1) Interlock link should be properly extended. (2) Replace shift fork shaft (3) Adjust or replace interlock pin spring. (4) Replace bearing. (5) Replace gear block
3. Disorder gear engagement	(1) Gear lever knob seriously wears out. (2) Gear shifting guide plate groove seriously wears out. (3) Shift fork and shift groove of meshing sleeve wears out. (4) Serious worn gear or spline.	(1) Replace or repair gear lever (2) Replace gear shifting guide plate. (3) Replace shift fork and meshing sleeve. (4) Change the worn parts
4. There is noise or knock in gearbox.	(1) Gear excessively wears out, tooth face is peeling off or breakage. (2) Bearing seriously wears out or is damaged. (3) Lubricant is insufficient or the lubricant quality does not satisfy the regulation. (4) Shaft spline and gear spline hole are worn.	(1) Replace gear (2) Replace bearing. (3) Change lubricant or fill it up. (4) Change the worn parts

3.16.1.3 Rear axle or brake failure and troubleshooting

Table 3-5 Rear axle or brake failure and troubleshooting

Failure	Cause	Troubleshooting
1. Main drive gives loud noise.	(1) Bevel pinion bearing play is excessive. (2) Gear engagement is abnormal. (3) Bevel gear pair bearing or gear is damaged. (4) Differential bearing is worn out or stuck. (5) Planet gear or shim is worn out. (6) Differential bearing is worn out or damaged.	(1) Readjust to specification (2) Readjust to specification (3) Replace bearing or gear (4) Replace differential shaft (5) Replace planet gear or shim. (6) Replace differential shaft
2. Bevel pinion bearing and differential bearing are too hot.	(1) Preload is excessive. (2) Lubricating is poor (3) Bevel gearset pair play is too narrow.	(1) Readjust the bearing preload. (2) Check the lubricant level, and add it if necessary. (3) Readjust the gear backlash.

3. Final drive gives abnormal noise.	(1) Bearing, gear or shaft is damaged.	(1) Replace bearing, gear or shaft.
4.Braking fade	(1) Free travel of brake pedal is excessive. (2) Brake pads are excessively or eccentrically worn out. (3) Free travel of brake pedal is excessive. （4）Brake pad is polluted by oil	(1) Readjust the free travel of pedal (2) Replace brake pads (3) Readjust the free travel of pedal to specification （4）Wash with gasoline and remove oil leak
5. Brake is hot	(1) Brake pads do not return. (2) the brake pedal fails in returning （3）Small free path of brake pedal	(1) Replace return spring (2) Adjusting to specification (3) Adjusting to specification
6. When braking, the tractor offset occurs.	(1) Free travels of left and right brake pedals are not the same. (2) Brake friction plate of one side is worn or polluted by oil (3) The front and rear tire pressures are not consistent.	(1) Adjustment (2) Change or wash the friction plate and remove oil leak. (3) Check and inflate it to specified pressure.

3.16.1.4 Traveling system failure and troubleshooting

Table 3-6 Traveling system failure and troubleshooting

Index:	Failure	Cause	Troubleshooting
1.	Front tires are seriously worn out.	(1) Front wheel rim or spoke is seriously distorted. (2) Toe-in is not well adjusted. (3) Steering knuckle and two clevis pins with heads of cylinder are severely worn out. (4) Tire inflation is insufficient during transportation. (5) Front drive axle is not disengaged during transportation. (6) Front drive wheel tire tread is reversely installed.	(1) Correct front wheel rim or spoke. (2) Adjust the toe-in (3) Replace clevis pins with heads. (4) Check and inflate it to specified pressure. (5) Release front drive axle (6) Readjust the wheel to specification.
2	Front shaft is swing.	(1) Fixing nuts and bolts attaching ball pin, cylinder and steering rocker are loose. (2) Toe-in is not well adjusted. (3) Bearing clearance is excessive or severely worn out. (4) Front wheel rim is seriously distorted.	(1) Check and tighten it. (2) Adjust the toe-in (3) Check or replace bearing. (4) Correct front wheel rim.

3	The noise is large. (Four-wheel drive tractor)	(1) Front main drive gear meshing mark is poor. (2) Main drive bearing clearance is excessive or damaged. (3) Differential shaft is worn out or damaged. (4) Planet gear or shim is worn out. (5) Final drive planet gearset meshing mark is poor.	(1) Readjust the gear meshing mark. (2) Repair of replace it (3) Replace differential shaft (4) Replace planet gear or shim. (5) Replace planet drive gear
4	Drive shaft protective bushing is hot. (Four-wheel drive tractor)	(1) Drive shaft is severely bend or distorted, causing friction.	(1) Correct of replace drive shaft
5	1. The noise in the transfer case is loud. (Four-wheel drive tractor)	(1) The high speed gear is higher than real speed. (2) Bearing or gear severely wears out.	(1) Engage low speed gear (2) Repair of replace it

3.16.1.5 Hydraulic steering system failure and troubleshooting

Table 3-7 Hydraulic steering system failure and troubleshooting

Index:	Failure	Cause	Troubleshooting
1	Oil leakage	(1) The rubber washer at each oil pipe connector or bolt is loose. (2) Valve body, stator or rubber ring of rear cover interface is damaged. (3) The rubber washer of shaft journal is damaged. (4) Bolt attaching steering gear joint is loose.	(1) Replace rubber washer or tighten the bolt. (2) Clean and replace rubber washer. (3) Replace rubber washer. (4) Tighten bolts
2	Steering is heavy.	(1) The oil supply pumped from the gear pump is insufficient. There is leakage in the gear pump or the filter screen in the steering oil reservoir is clogged. Steering at low speed is light and steering at high speed is heavy. (2) When turning the steering wheel, the cylinder moves sometimes. (4) Relief valve spring elastic force weakens or the steel ball sealing is invalid. Light-duty steering is light and heavy-duty steering is heavy. (5) Oil viscosity is too thick. (6) Steel ball check valve in the valve block is invalid. Steering wheel is heavily turned at high speed and at low speed, as well as with powerless of steering. (7) oil leak (inside and outside the cylinder)	(1) Check the gear pump is normal and clean the filter screen. (2) Empty the air in the system, check whether there is air in the oil absorption pipeline. (4) Clean the relief valve and adjust the relief valve spring pressure. (5) Use specified grade lubricant (6) Maintain or replace related parts (7) Check and remove the oil leak
3	Steering failure.	(1) The pull pin is broken or distorted. (2) Opening of linkage shaft is broken or distortion. (3) Rotor and universal drive shaft are reversely installed.	(1) Replace the pull pin. (2) Replace universal drive shaft (3) Reinstall it

		(4) Steering cylinder piston or piston sealing ring is damaged.	(4) Replace piston or sealing ring
4.	There is no manual steering	(1) The clearance between the rotor and stator is excessive. (2) In case of power steering, the driver can not obviously feel that the piston is already at extreme position. When manual steering, steering wheel rotates but the cylinder does not.	(1) Replace stator and rotor. (2) Replace piston sealing ring
5.	Insensitive steering	(1) The clearance between the valve core and valve sleeve is excessive. (2) Clearance between universal drive shaft and pull pin is excessive. (3) Clearance between universal drive shaft and rotor is excessive. (4) Return spring leaf is broken or too soft.	(1) Replace it (2) Replace it (3) Replace it (4) Replace it

3.16.1.6 Hydraulic hitch system failure and troubleshooting

Table 3-8 Hydraulic hitch system failure and troubleshooting

Index:	Failure	Cause	Troubleshooting
1	Hydraulic hitch system could not lift neither at light duty nor at heavy duty.	(1) The oil level in the lifter housing is too low. (2) The filter screen of oil filter is severely clogged. (3) There is air in the oil absorption pipeline. (4) Gear pump is invalid. (5) The elastic pin at outmost or innermost of control handle comes off. (6) Swing lever in the distributor comes off. (7) Main control valve is stuck at neutral or lowering position or the oil return valve is stuck at opening position. (8) Main control valve is stuck (9) lowering valve is stuck (10) The pin is shorten or the lowering valve assembly is loose and rotated out, causing un-opening the lowering valve. (11) The oil pipeline from the cylinder head to cylinder is closed.	(1) Fill oil to specified level. (2) Replace or replace filter screen. (3) Check the pipeline joint. (4) Check, repair or replace gear pump (5) Reinstall elastic pin. (6) Open the distributor and install the swing lever. (7) Dismantle the distributor to clean all valves (8) Clean the main control valve. (9) Clean the lowering valve. (10) Remove the descent valve clogging, readjust the clearance of descent valve pull pin or tighten the descent valve assembly. (11) Open the oil pipeline.
2	It could rise at light-duty. While it could not rise or rise slowly at heavy-duty.	(1) There is air in the oil absorption pipeline. (2) Adjusting pressure of system relief valve is too low. (3) Adjusting pressure of cylinder relief valve is too low. (4) Gear pump is severely worn out,	(1) Check the oil absorption pipeline and oil filter. (2) Repair of replace system relief valve. (3) Adjust of replace cylinder relief valve. (4) Repair or replace gear pump

Index:	Failure	Cause	Troubleshooting
		causing insufficient pressure. (5) There is oil leakage from the cylinder sealing ring.	(5) Replace cylinder sealing ring
3	The agricultural implement is joggling during lifting at slow speed.	(1) The oil filter is clogged. (2) There is air in the oil absorption pipeline. (3) Gear pump is invalid. (4) The hydraulic oil level is too low.	(1) Replace or clean filter element (2) Troubleshoot the leakage at the connector and O-ring. (3) Replace gear pump (4) Fill lubricant to specification.
4	After lifting the agricultural implement, it frequently “Nods”. Descent speed only under self-weight condition is fast after the engine flameout.	(1) Distributor one-way valve sealing is poor. (2) The lowering valve sealing is poor. (3) Cylinder relief valve is leaking oil or improperly adjusted. (4) There is oil leakage from the cylinder piston O- ring. (5) The sealing ring between the distributor or cylinder head and oil inlet of lifter housing is not well installed or damaged.	(1) Clean the one-way valve and face it up if necessary. (2) Clean or face up the descent valve (3) Adjust or readjust cylinder relief valve. (4) Replace O-ring. (5) Check and replace sealing ring
5	With the handle at the lifting position, the distributor gives sharp sound.	(1) The adjustment is not correct, causing the inner lifting arm against lifting housing to have the relief valve opened.	(1) Firstly measure the lifting height of agricultural implement, then readjust the force/position adjusting lever to let lifting extreme position is lower than original position.
6	There is no hydraulic output at the cylinder head or the hydraulic output is powerless.	(1) The inlet pipe to cylinder is not cut off. (2) The sealing between front taper body of the descent speed control valve and taper hole is poor. (3) The lifter is at neutral position	(1) Clockwise tighten the descending speed control hand wheel. (2) Repair and face up the sealing between the front taper body of descending speed control valve and taper hole. Or replace the descend speed control valve. (3) Push lifter control handle to “Lowering” position in order to lower outer lift arm to the lowest position and cut off inlet oil line of oil tank. Then push control handle to “Lifting” position.

3.16.1.7 Air brake system failure and troubleshooting

Table 3-9 Air brake system failure and troubleshooting

Index:	Failure	Cause	Troubleshooting

Index:	Failure	Cause	Troubleshooting
1	Air pressure is insufficient.	(1) Air is leaking out of pipe. (2) Exhaust valve plate of air pump wears out or the spring is damaged. (3) Air pump piston ring or cylinder liner severely wears out. (4) Air pressure alarm is fault. (5) Relief valve could not be tightly closed.	(1) Check and troubleshoot the air leaking points. (2) Replace it (3) Replace piston ring and cylinder liner. (4) Replace or repair air pressure alarm. (5) Check or replace relief valve.
2	The air cut-off brake valve does not reset	(1) The dust enters the air cut-off brake valve (2) The oil or water enters the air cut-off brake valve	(1) Clean the air cut-off brake valve (2) Drain the oil or water in air reservoir. Clean air cut-off brake valve.
3	The air cut-off brake valve does not exhaust	(1) Tappet is stuck. (2) Return spring is broke or its elastic force is weakened.	(1) Repair it to make tappet movement flexible without stuck. (2) Replace return spring

3.16.2 Electrical system failure and troubleshooting

3.16.2.1 Starter motor failure and troubleshooting

Table 3-10 Generator failure and troubleshooting

Index:	Failure	Cause	Troubleshooting
1.	Generator does not rotate.	(1) Battery power is insufficient. (2) Dirty battery plate or loose cables. (3) Cable joint is loose or ground wire is rusted. (4) The control circuit such as starting switch etc is disconnected. (5) The carbon and communtator are not well-connected. (6) Starter motor circuit is open, short circuit.	(1) Charge the battery as specified. (2) Clean dirt and tighten connections. (3) Tighten the connection and remove the corrosion. (4) Check the circuit for reliability. (5) Adjust the spring pressure of carbon brush and clean the communtator. (6) Repair starter motor
2	Starter motor starting is powerless or can not start the engine.	(1) Battery power is insufficient. (2) Cable is not will connected. (3) Communtator surface is burned or contaminated with oil. (4) The carbon brush excessively wears out or the spring pressure of carbon brush is insufficient, causing it poor connection with communtator. (5) Main contact point of solenoid valve is burnout and not well connected. (6) Bearing is severely worn out, the armature is against its housing.	(1) Charge the battery as specified. (2) Tighten the wire connection (3) Smooth the communtator surface to clean oil contamination. (4) Replace or adjust it (5) Polish it with “0” nonmetal abrasive paper (6) Replace bearing.

Index:	Failure	Cause	Troubleshooting
3	The engine is already started, but starter motor is till running, giving sharp noise.	(1) Copper contact disc is stuck with the two contact points in the starter motor relay. (2) Starter motor lever is released out of hook or eccentric screw is loose. (3) Lever return spring is broken or loss of elastic force. (4) Starter motor armature is broken or bent. (5) The gear is stuck by galling (6) The contact point of starting relay is stuck. (7) After starting, the ignition switch does not reset.	(1) Check circuit and repair contact points. (2) Readjust and fix it. (3) Replace spring (4) Repair starter motor (5) Smooth gear face (6) Replace starter motor (7) Replace the ignition switch.

3.16.2.2 Generator failure and troubleshooting

Table 3-11 Generator failure and troubleshooting

Index:	Failure	Cause	Troubleshooting
1	Generator can not generate electrical energy.	(1) Cable is not well connected or reversely connected or disconnected. (2) Rotor circuit is open. (3) The rectification diode is damaged. (4) Carbon brush is not well connected. (5) The regulator is damaged.	(1) Repair circuit (2) Repair of replace generator assembly. (3) Replace the diode. (4) Remove the dirt or replace carbon brush (5) Repair of replace regulator.
2	Generator can not charge the battery sufficiently.	(1) The driving belt is slacken. (2) Carbon brush is not well connected. There is oil contamination on slip ring. (3) The regulator is damaged. (4) Battery electrolyte is excessive low or sulfuration is severe or the battery is too old.	(1) Adjust the drive V belt tension (2) Adjust the carbon brush and clean the slip ring. (3) Replace regulator. (4) Refill the electrolyte to specified height. If the sulfuration is severe and can out be recovered, replace it.
3	Generator charging current is too high, opting to burn the bulb.	The voltage of regulator is too high.	Replace voltage regulator.

3.16.2.3 Battery failure and troubleshooting

Table 3-12 Battery failure and troubleshooting

Failure	Cause	Troubleshooting
The battery power is insufficient and difficult to start engine.	(1) The electrolyte is too low. (2) The circuit between pole plates is short-cut. (3) Vulcanization of pole plate occurs. (4) The terminal is not well connected. There is too much oxidate on the pole. Charging power is insufficient.	(1) Replace battery (2) Clean the deposition and replace electrolyte. (3) Clean the vulcanization by repeatedly charging and discharging the battery. (4) Tighten the connection. Clean the oxidate to coat a thin layer of Vaseline on the pole.
2. Discharging current is too high.	(1) There is foreign material in electrolyte (2) There is short circuit outside of battery. (3) Electrolyte is spilled out of battery, causing shortcut of positive and negative poles. (4) Place the metal tool or lever between the positive pole and negative pole, causing severe shortcut. (5) The active material is off of pole plate or the active material deposits too much, causing the shortcut of pole plate. The insulator is damaged, causing shortcut of pole plate. The pole plate is warped, causing battery shortcut.	(1) Replace battery (2) Find out the shortcut circuit to solve the problem. (3) Wipe the battery surface and poles with alkaline water or warm water to keep it clean (do not let the water enter battery) (4) Do not lay the metal rod or tools on the surface of battery.

3.16.2.4 Instrument failure and troubleshooting

Table 3-13 Instrument failure and troubleshooting

Index:	Failure	Cause	Troubleshooting
1	Water temperature gauge pointer always points to low temperature zone.	(1) Circuit is open. Connector is not well connected. (2) Water temperature sensor is damaged. (3) Water temperature gauge is fault.	(1) Repair the circuit and clean the dirt at the connector. (2) Replace water temperature sensor. (3) Replace instrument.
2	Water temperature gauge pointer always points to high temperature zone.	(1) Water temperature sensor is damaged by shortcut. (2) There is shortcut in all circuits. (3) Water temperature gauge is fault.	(1) Replace water temperature sensor. (2) Check and solve failure of short-cut circuit. (3) Replace instrument.
3	Oil pressure gauge could not indicate normally.	(1) There is shortcut or open in circuit. (2) Sensor circuit is open, shortcut or not well connected. (3) Oil pressure gauge is fault.	(1) Troubleshoot it. (2) Repair of replace sensor. (3) Replace instrument.
4	Barometer could not indicate normally.	(1) Instrument is damaged. (2) Air is leaking out of pipe.	(1) Repair of replace instrument. (2) Repair of replace air pipe.

3.16.2.5 Lamp failure and troubleshooting

Table 3-14 Lamp failure and troubleshooting

Index:	Failure	Cause	Troubleshooting
1	There is no high and low beam in headlamp	(1) Circuit is shortcut or open or the fuse is burnout. (2) Dimmer switch is not well connected or damaged. (3) Filament is burnout.	(1) Check and repair the circuit. (2) Repair or replace it (3) Replace with high quality bulb.
2	Backup lamp can not go on.	(1) Circuit is open. (2) Backup lamp switch is not well connected or damaged.	(1) Check and repair the circuit. (2) Repair or replace it

4 Accessories, Spare and Wearing Parts

4.1 Accessories and spare parts

4.1.1 Cab (Optional)

The LOVOL tractor can be equipped with safety frame in order to provide a comfortable operating environment for the driver.

4.1.2 Tilting tow bar (Optional)

It is only used for towing agriculture implemtns. The after tow bar is connected to Implement by traction pin. This tow bar can horizontally swing to hook with implement in an easy way. In operation, the tow bar can swing from left to right. However, locating pin (1) must be inserted in the bore on towing plate to prevent it from swinging (See Fig.4-1) when tractor trailing implement reverses.

The height of towing point can be changed by turning over towing bar in order to reach appropriate height for supporting implement.

Fig.4-1 Application of tilting traction

1. Locating pin 2.Tilting tow bar

4.1.3 Vehicle tool schedule

Table 4-1 Vehicle tool schedule

Item No.	Code	Name	Quantity	Remark
1	JB/T 7942.1	Strut-type oil gun A100	1	
2	QB/T 2564.4	1×5.5×125PSlotted-head screwdriver	1	
3	QB/T 2564.5	6×150P Cross recessed head screwdriver	1	
4	GB/T 4388	Double-head wrench 10×13×135	1	
5	GB/T 4388	Double-head wrench 16×18×183	1	
6	GB/T 4388	Double-head wrench 21×24×223	1	
7	GB/T 4388	Double-head wrench 27×30×244	1	

4.1.4 Vehicle part schedule

Table 4-2 Vehicle part schedule

Item No.	Code	Name	Quantity	Remark
1	TD9600000700	Fuse 10A	1	
2	TD9600000800	Fuse 15A	1	
3	TD9600000900	Fuse 20A	1	
4	TD900.484.3	Back trailer latch	1	

4.1.5 Vehicle document list

Table 4-3 Vehicle document list

Item No.	Code	Name	Quantity	Remark
1		The User Manual of Tractor	1	
2		The Technical Document for Engine	1	Provided by the engine parts manufacturer
3		Product Qualification Certificate	1	
4		The Product Certificate of Engine	1	Provided by the engine parts manufacturer
5		Tractor spare parts Atlas	1	
6		Warranty Services certificate	1	
7		Engine spare parts box	1	Engine Belt
8		A packing list of vehicle items	1	

Note: For acceptance inspection of the tools, spare parts and documents provided with engine, it is necessary to

comply with packing list of diesel engine.

4.2 Wearing parts

The wearing parts of LOVOL series wheeled tractor include: Table 4-2 Fuse and parts listed in the table below

Table 4-4 Wear parts (such as bubble, rubber etc) list

Item No.	Code	Name	Quantity	Remark
1	12V-1141-28W	Rear work lamp bulb	1	
2	12V-1141-21W	Front/rear steering light bulb	4	
3	12V-89-5W	position lamp bulb	2	
4	12V-H4-55/60W	Distance-light double filament bulb	1	
5	12V-1141-21W	brake lamp bulb	2	
6	TE324.20A-01	Thread rubber ring	1	
7	FT220.40.301	Steering rod protective bush	1	
8	TE250.362D-01	Dust ring	1	for shuttle shift model
9	FT250.47C.230	Hood seal	1	
10	TE250.475B-01	adhesive tape	1	

Important instruction:

1. All various spare parts, tools and wearing parts are special parts used for this machine. Take good care to store and prevent from loss in order to use, repair and maintenance for machine; if they are lost carelessly, it is possible to lead machine functions and performance degradation.
2. During maintenance and service for machine, you must use standard accessories provided by official manufacturer; if used non-standard accessories, the machine will be impacted on functions, performance and service life, even creating a potential safety hazard.

5 Maintenance Instruction

Technical maintenance covers a series of technical maintenance such as cleaning, checking, lubricating, fastening each part or replacing some parts etc. Good technical maintenance could slow down the deterioration of technical state for each part to reduce the failure and to prolong the service life, which could ensure the tractor works in good state.

Important:

1. All maintenance should be carried out by the person specially trained and be familiar with machine features to avoid the damage of tractor.
2. Please strictly follow the technical maintenance procedures to ensure the tractor normal work and to prolong its service life.
3. In the warranty period of tractors, if non-professional personnel who are not familiar with the characteristics of this machine conduct the maintenance, or in the maintenance period specified by the manufacturer no maintenance work has been done according to the requirements, then the damage to the tractors will result in the loss of the related right of the three guarantees of this tractor.
4. Never adjust the relief valve opening pressure of engine, hydraulic system and air brake system, and opening pressure of radiator cap without permission. Otherwise it will damage the tractor, reduce the machine performance and then lose related “Three Guarantees”.

5.1 Technical maintenance procedures

According to the accumulated working hours, the LOVOL series wheeled tractor technical maintenance procedures are classified into the following level: each shift (every 10h), every 50h, 200h, 400h, 800h, 1600h, special maintenance in winter and maintenance for long-time storage.

5.1.1 Technical maintenance at each shift.

(1) Clean the dirt and oil contamination on the tractor; If working in the dusty environment, please clean the air cleaner.

(2) Check the main bolts and nuts outside tractor for looseness, especially the nuts of front and rear wheels. Tighten them if necessary.

(3). Check the fluid level in the oil sump, radiator, fuel tank and hydraulic lifter and battery etc and fill them if necessary. If checking the level in oil sump, please go ahead after stopping and waiting for 30min.

(4) For adding the grease, please refer to maintenance sheet 1.

(5) Check the tractor for leaking of air, oil, water etc. If so, please troubleshoot.

(6) Check the front and rear tires pressure and inflate them if necessary.

(7) Check and adjust the free travel of clutch pedal and brake pedal.

(8) Please service the diesel engine according to the “Daily maintenance” in “Diesel engine use and maintenance instruction”.

5.1.2 Technical maintenance every 50h

(1) The whole content of technical maintenance each shift should be completed.

(2) Check and dedust the oil surface of oil-bath type air cleaner.

(3) Check the tension of fan belt. Use finger to press the belt and the distance should be （15~20）mm. If not, adjust it.

(4) Coat grease on the battery terminals to avoid corrosion.

(5) Open the clutch drain plug to drain the deposited oil.

(6) Please service the diesel engine according to the “Stage I technical maintenance” in “Diesel engine use and maintenance instruction”.

5.1.3 Technical maintenance every 200h

(1) The whole content of 50h technical maintenance should be completed.

(2) Please change oil in diesel engine oil sump and then clean the oil sump, oil absorption disc and oil filter screen.

(3) Clean and service the oil basin of oil-bath type air cleaner.

(4) Clean the oil filter of lifter and replace the filter element if necessary.

(5) Please service the diesel engine according to the “Stage II technical maintenance” in “Diesel engine use and maintenance instruction”.

5.1.4 Technical maintenance every 400h

(1) The whole content of 200h technical maintenance should be completed.

(2) Check the fluid level in transfer case, fill it if necessary.

(3) Check the fluid level in front drive axle, fill it if necessary;

(4) Check and adjust the front wheel toe-in and tightness of front wheel bearing. Adjust it if necessary.Change lubricant in front wheel hub.

(5) Check the spinning angle of steering wheel, adjust it if necessary.

(6) Please clean and maintain the filter of hydraulic system.

(7) Please service the diesel engine according to the “Stage III technical maintenance” in “Diesel engine use and maintenance instruction”.

5.1.5 Technical maintenance every 800h

(1) The whole content of 400h technical maintenance should be completed.

(2) Change oil in hydraulic system

(3) Fully clean the radiator with 25% concentration Hydrochloric acid solution, and then use water to clean it again.

(4) Cleaning the transfer case and changing lubricant should be done when the engine is still hot.

(5) Clean the oil absorption filter screen of hydraulic system and check the oil cleanness. If necessary, clean the chamber of lifter housing and replace with new oil.

(6) Check and adjust the valve clearance of engine.

(7) Check and adjust the fuel injecting pressure of injection pump.

(8) Clean the fuel tank and its filter.

(9) Please service the diesel engine according to the “Stage IV technical maintenance” in “Diesel engine use and maintenance instruction”.

5.1.6 Technical maintenance every 1600h

(1) The whole content of 800h technical maintenance should be completed.

(2) Remove the engine and starter motor, change with new grease.

(3) Replace the lubricant in main drive and final drive of front drive axle.

(4) Fill grease by soaking the front bearing and release bearing of clutch into molten heat-resistance grease.

(5) Check whether the main drive gear backlash and meshing mark are normal. Inspect the bearing clearance and preload, adjust it if necessary.

(6) After maintenance, carry out the commissioning for a short time to check the working status of each mechanism.

5.1.7 Special maintenance for winter

If the ambient temperature is below 5°C, please strictly follow the regulations, with exception of “Each shift technical maintenance”

(1) To easily start engine, add （60 ~80）°C hot water into the cooling system.

(2) After cold starting engine, please preheat for a while prior to work.

(3) When the work has been completed, if time of parking tractor is long, drain the cooling water in the cooling system.

(4) Choose the fuel and lubricant according to season and air temperature.

(5) To ensure the engine could be easily started, it is recommended to park the tractor in the heat retaining shed or garage in severe cold season.

5.1.8 Tractor maintenance for long-time store

If storing the tractor for less than 1month and the changed oil has not been used for 100h, special precautions will not be needed. If storing for more than 1 month, please carry out the special technical maintenance according to “6 storage”.

Table 5-1 TE series Tractor maintenance sheet

Index:	Maintenance parts	Operation content	Points	Maintenance intervals
1	Engine oil sump	Check the oil level	1	Each shift
2	Oil-bath type air cleaner	Check the oil level	1	Each shift
3	Air pump	Check the oil level	1	Each shift
4	Battery	Check the oil level	1	Each shift
5	Radiator (water tank)	Check the oil level	1	Each shift
6	Engine water pump shaft	Adding grease	1	Each shift
7	Injector pump	Check the oil level	1	Each shift
8	Rear hub	Adding grease	1	Each shift
9	Clutch	Adjust the free travel	1	Each shift
10	Brake	Adjust the free travel	2	Each shift
11	Fan belt	Check its tension	1	Every 50h
12	Steering cylinder	Adding grease	1	Every 50h
13	Sleeve pipe of front shaft king pin	Adding grease	1	Every 50h
14	Pendulum shaft, front axle of 4DW	Adding grease	2	Every 50h
15	Central sway pin sleeve, front shaft	Adding grease	1	Every 50h
16	Swing axle, front axle	Adding grease	1	Every 50h
17	Diesel filter	Replace filter element	1	Every 200h
18	Oil filter	Replace filter	1	Every 200h
19	Lifter oil filter	Replace or clean filter element	1	Every 200h
20	Injector pump	Change lubricant	1	Every 200h
21	Engine oil sump	Change lubricant	1	Every 200h
22	Oil basin of oil-bath type air cleaner	Maintain and clean	1	Every 200h
23	Transfer case	Check the oil level	2	Every 200h
24	Front wheel	Adding grease	2	Every 400h
25	Clutch pedal hub	Adding grease	1	Every 400h
26	Brake pedal hub	Adding grease	2	Every 400h
27	Front drive axle	Check the oil level	1	Every 400h
28	Kingpin oil cup, front drive axle	adding grease	2	Every 400h
29	Fuel tank	Maintain and clean	1	Every 800h
30	Intake and exhaust, engine	Adjust valve clearance	4	Every 800h
31	Injector pump	Adjust fuel injecting pressure	2	Every 800h
32	Transfer case	Change lubricant	2	Every 800h
33	Engine cooling system	Maintain and clean	1	Every 1600h
34	Engine cooling system with antifreeze adopted	Change antifreeze	1	Every 1600h
35	Main drive, front drive	Change lubricant	1	Every 1600h
36	Final drive, front drive axle	Change lubricant	1	Every 1600h

5.2 Clutch adjustment

5.2.1 Clutch adjustment (single-acting)

To ensure the normal work of clutch, the clearance between the release lever 4 working face of main clutch and end face of release bearing 5 should be kept within（2～2.5）mm. The clearance between the end-face of release lever 6 of auxiliary clutch and release bearing 5 should be kept within B=（10~11）mm. Continuous wear of clutch friction lining will gradually reduce the clearance until it disappears. Therefore check it regularly.

(1) Free travel of clutch pedal is adjusted as follows:

Firstly loosen the lock nut 3 on the release lever (see fig.5-1). Then rotate the adjusting screw 2 to make sure the distance between working face of three release levers 4 and clutch pressure plate 1 shall be (45±0.125)mm, finally lock with nut 3. Adjust the clutch front fork 4 (see figure 5-2) to ensure the free travel of clutch pedal is（4-5.5）mm, ensure the clearance A between working face of release lever 4 and end face of release bearing 5 is (2-2.5)mm (see the right figure); after that, lock the nut 5.

(2) Work travel of clutch pedal is adjusted as follows:

Loosen the lock nut 1(see fig.5-2, unit: mm) and rotate the limit screw 2 to keep the work travel of release rocker arm 3 within (30-35) mm. Finally secure the lock nut 1.

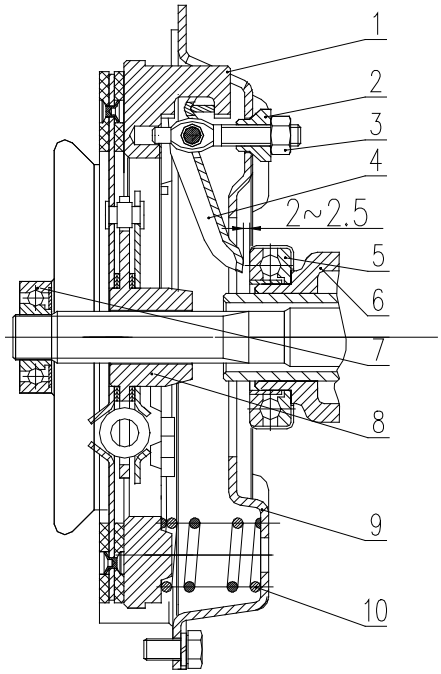

Fig.5-1 Single-action clutch

1. Pressure plate 2. Adjusting nut; 3. Lock nut 4. Release lever; 5. Release bearing 6. auxiliary bearing seat; 7. Bearing; 8. Driven plate; 9. Clutch housing; 10. Clutch spring

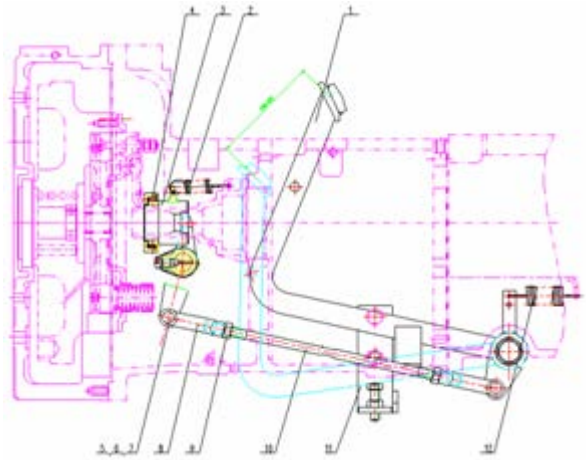

Fig.5-2 Clutch maneuvering system schematic

1. Pedal pressing; 2. Return spring of thrust bearing seat

3. Releasing bearing seat; 4. Release bearing; 5. Pin shaft; 6. Split pin 7. Plain washer; 8. Front fork of lever; 9. Nut; 10. Operation lever 11 Pedal check plate; 12. Return spring

5.2.2 Clutch adjustment (double-acting)

To ensure the normal work of clutch, the clearance between the release lever 4 working face of main clutch and end face of release bearing 5 should be kept within（2～2.5）mm. For 25-28hp model, the clearance between the end-face of release lever 6 of auxiliary clutch and release bearing 5 shall be B=（10~10.5）mm (10.5-11 mm for 30-32hp models). Continuous wear of clutch friction lining will gradually reduce the clearance until it disappears. Therefore check it regularly.

(1) Free travel of clutch pedal is adjusted as follows:

Firstly loosen the lock nut 3 on the adjusting screw 2 (see fig.5-3). Then rotate the adjusting screw 2 to make sure the working face distance between 3-main clutch release lever 4 and clutch pressure plate 1 should be (86.5±0.2)mm (for 25-28 horsepower type), or A=（101.5+0.2）mm (for 30-32 horsepower type). Finally secure the lock nut3.Firstly loosen the nut7, 8 and rotate the adjusting nut 8 to make sure the working face distance between auxiliary clutch release lever 6 and clutch pressure plate 1 should be C=(78.5+0.2)mm (for 25-28 horsepower type), or C=（93+0.2）mm (for 30-32 horsepower type). Finally secure the nut 8.Adjust the clutch front fork 4 (see fig.5-2) to ensure the free travel of clutch pedal is（20~25）mm. After that, lock the nut 5 (see fig.5-2).

(2) Work travel of clutch pedal is adjusted as follows:

Loosen the lock nut 1(see fig.5-2) and rotate the limit screw 2 to keep the work travel of release rocker arm 3 within (40-45) mm. Finally secure the lock nut 1.

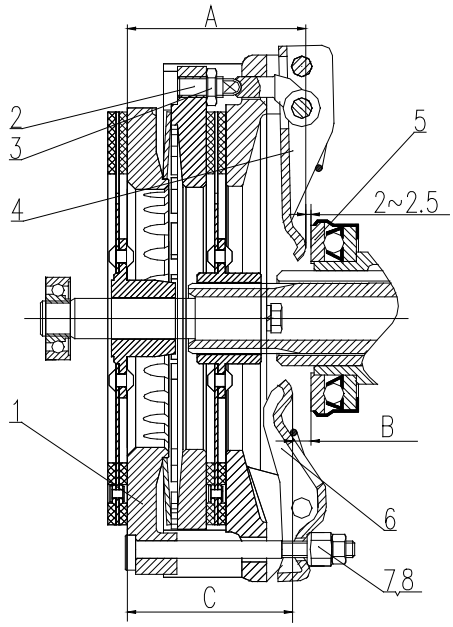

Fig.5-3 Double-acting Clutch

1. Pressure plate 2. Adjusting screws 3. Lock nut 4. Main clutch release lever 5. Release bearing 6. auxiliary clutch release lever 7、8. Nut

Important:

(1) To avoid the oil droplet is contaminated on the friction lining, frequently screw out the drain plug beneath the flywheel housing to drain the dirty oil leaked into the engine and transfer case. If leaking is serious, please timely troubleshoot. If necessary, use gasoline (or kerosene) to clean the friction lining.

(2) To prevent and avoid the wear of friction lining, the clutch should be frequently maintained and adjusted. Do not release and engage the clutch at will. When releasing the clutch, fast depress the clutch to floor. Never work with clutch semi-engaged to avoid damage of clutch.

(3) Never work with clutch poorly adjusted. This could accelerate the wear of clutch friction lining and even burnout.

(4) When installing clutch, fill up the bearing 7(see fig.5-1) and chamber in release bearing block 6 with lithium base grease. When dismantling the clutch, please check whether the release bearing 5 is lack of lubricant. If so, put the bearing into heated molybdenum disulfide base grease to let the grease penetrate into bearing. When the grease cooling down, take it out and carry out installment. Do not clean the release bearing by putting it into gasoline or diesel to avoid the grease in the bearing is washed away. Otherwise, refill the grease.

5.3. Brake adjustment

5.3.1 If the following items occurs, please adjust it:

- Free travel of brake pedal is too large, causing brake fade.
- The free travel of brake pedal is too small, causing the semi-brake state as the clearance between the brake pad and spinning rotor is too small.
- The left braking force is not consistence to the right braking force, causing tractor “Offset”.

5.3.2 Brake adjusting method:

- Adjustment for free travel of brake pedal

  Loosen lock nut 3 on brake bar 6, remove the split pin on the brake bar, rotate brake bar to change the length of the brake bar to make the free path (the displacement of the brake pedal from the highest position to the position where the gap between the brake hub 5 and the brake shoe friction plate 4 disappears) of the brake pedal within (20~30) mm, and make the lengths of the left and right brake bars 6 be same, then use lock nut 3 to lock tightly. Then lock short link with lock nut 3.

- Brake “Defection” adjustment

  If the adjustment of left and right brakes is not consistent, the left and right tire traces will not consistent (Viz “Deflection”) when emergency braking during the tractor traveling at high speed. At this time, the brake link with short trace should be properly shortened or the brake link with long trace should be properly extended until the traces are similar and braking is reliable. Then lock the nut3.

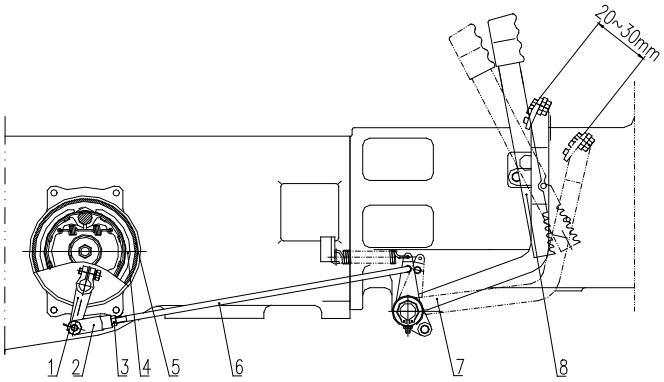

Fig. 5-4 Braking system

1. Rocker arm 2. Adjusting fork 3.Lock nut 4. Friction lining 5. Brake drum; 6. Brake rod 7. Brake pad 8.lock plate of brake

Caution: The free travels should be the same for left and right brake pedals. Otherwise, in case of emergency braking, the tractor will sharply deflect to one side, causing possible accidents.

5.4 Trailer air brake adjustment

(1) If the tractor transporting with trailer, the system pressure should not be less than 0.44MPa.Otherwise, you are allowed to drive the tractor only raising the air pressure to set value.

(2) Generally, the balance pressure in the air reservoir should not be less than 0.70MPa.Otherwise, please adjust the air pressure regulator. When engine is stopped, if air pressure alarm gives the warning, it indicates there is any leakage and troubleshoot.

(3) Opening pressure of air reservoir relief valve is (0.75~0.8)MPa. Please timely adjust and demarcate the air pressure during work.

(4) If the air pressure is always within (0.75~0.8)MPa or more, it indicates the relief valve will not relieve the pressure. Please timely clean or replace the relief valve.

(5) After daily work is over, open the drain valve 14 to drain the deposited water in the air reservoir 15.

(6) If the tractor transporting with trailer, please check the whole braking system to ensure the trailer braking is synchronizing with tractor braking or is slightly in advance rather than lag behind.The adjusting method is as follows:.

Loosen the nut 10 and rotate the adjusting fork 11 to shorten the adjusting link 8 to bring forward the trailer braking time. Extend the adjusting link 8 to lag behind the trailer brake time.If necessary, this can be done by adjusting the screw 7, then secure the lock nut 9,10.

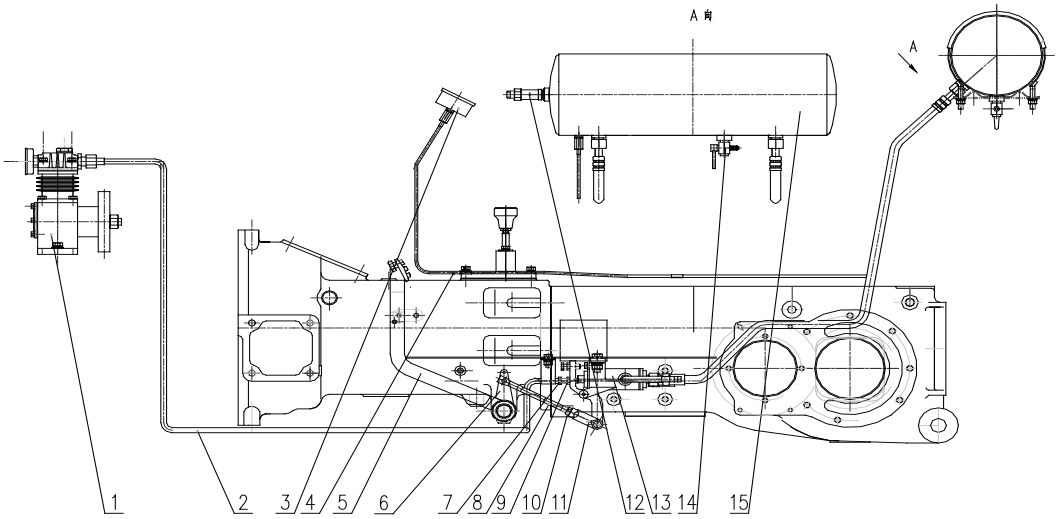

Fig. 5-5 Trailer air brake system

1. Air compressor 2. Outlet pipeline of compressor 3. Air pressure warning 4. Connection to barometer 5. Brake pedal 6. Short rocker arm 7. Adjusting screw 8. Adjusting link 9. Lock nut 10. Nut 11. Adjusting fork 12. Relief valve 13. Air brake valve 14. Drain valve 15. Air reservoir

Caution: the trailer braking should be consistent with tractor braking or be slightly in advance. Otherwise, the roller accident will occur.

5.5. Main drive adjustment

5.5.1 Tapered bearing preload adjustment (see Fig. 5-6)

After use for a while, the bearing wear will gradually eliminate the preload, creating the play between the two bearings. If the play is more than 0.1mm, the tapered bearing should be pre-tightened again.

The preload adjustment of 2nd shaft tapered bearing:

Adjust the lock nut 2 close to the bearing 2 to adjust the torque of driving bevel gear 1 to (1.5~2.5)N •m. Lock the nut 2 after the adjustment. If it is difficult to measure the torque, ask skillful person for help. The nut shall be locked after the adjustment.

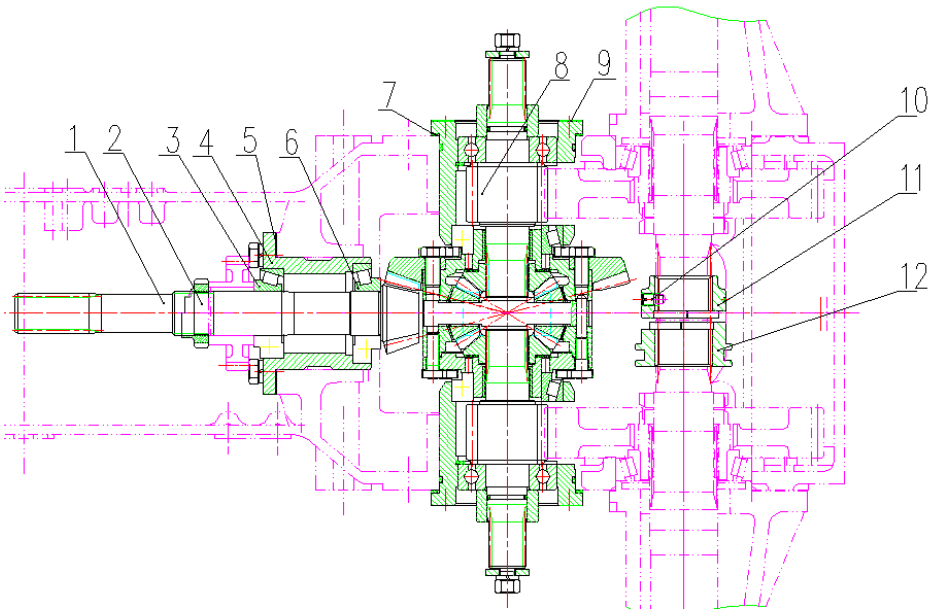

Fig.5-6 Tapered bearing preload adjustment

1. Driving bevel gear of main drive; 2. Lock nut; 3. Cone bearing; 4. Bearing seat of driving gear; 5. Adjusting washer; 6. Cone bearing; 7. Adjusting washer; 8. Short axle shaft assembly; 9. Paper pad; 10. Screw; 11. Right jaw; 12. Left jaw

5.5.2 Adjustment of meshing mark and backlash of bevel gear pair.

The meshing mark and backlash should be adjusted and then checked regularly when the wear is excessive, meshing mark is abnormal (that could give impact or noise) or replacing with new tapered gear pair.

Install same number of adjusting washers (No. 5 and No. 7) between the bearing seats of the two sides of differential and the case to adjust the pre-tension of cone bearing of differential in order to increase the torque of driving bevel gear (No.1) of main drive by (0.4~0.7）N • m; install proper number of washers (No.5) out of the bearing seat and change the left washers with the right washers of bearing seat of the differential to change the engagement of spiral bevel gears to make the normal backlash to reach 0.15~0.25 and correct contact pattern (the pattern shall be in the middle of working teeth and close to the toe; spot patterns are allowed; however, the length shall be not less than 60% of teeth length and height not less than 50% of teeth height)

For the adjusting method of backlash and meshing mark, please see table 5-2.

During adjusting, the axial motion of bevel gear and bevel pinion will change the meshing mark and backlash. If the requirements for the meshing mark contradict with that for backlash, the meshing mark should prevail. Yet the adjusting range of backlash should be widened, especially carry out adjustment after wear or gear and bearing. The backlash should not less than 0.1mm

During the normal work of tractor, it is not needed to adjust as long as the meshing mark is normal.The adjustment should be carefully done when overhauling tractor or replacing a pair new of main drive gears or bearings. Meanwhile the meshing mark and backlash should be right.

Important: the bevel gear and bevel pinion of main drive are a pair of gears. Do not reversely install them. The gears should be replaced in pair. It is better to be replaced with bearing, otherwise the tractor life will be shorted.

Table 5-2 Adjustment for spiral bevel pinion of main drive

Index:	Description	Bevel pinion meshing mark(forward gear)	Bevel pinion meshing mark(reserve gear)	Adjusting instruction and diagram	
1	Normal mashing mark	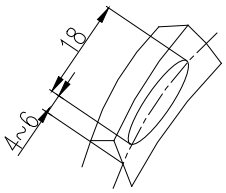	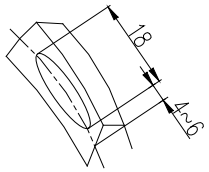	If engaging forward gear, the meshing mark length on concave face of spiral bevel pinion should be less than 60% of tooth width, and its height should not be less than 50% of tooth height. The mark should be allocated around the center of tooth height and slightly near the tooth toe. If engaging reverse gear, the meshing mark on the convex face on the spiral bevel pinion should be same as the above said.	
2	Abnormal meshing mark	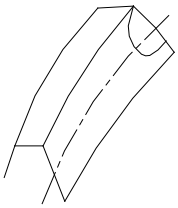	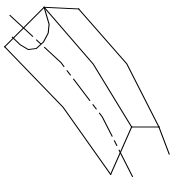	(1) Increasing the adjusting shim on the front bearing bushing of the 2nd shaft could move the bevel pinion forward. (2) If the clearance is large, please move the bevel gear to the right.	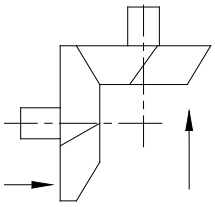
		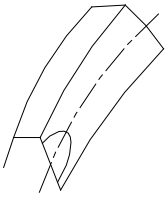	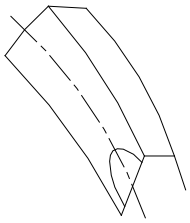	(1) Decreasing the adjusting shim on the front bearing bushing of the 2nd shaft could move the bevel pinion backward. (2) If the clearance is small, please move the bevel gear to the left.	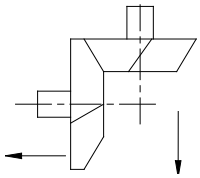
		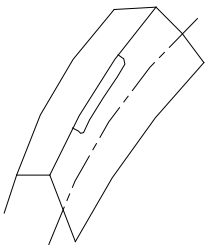	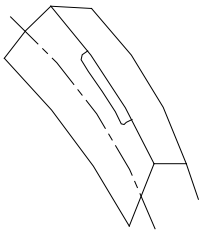	(1) Decreasing the adjusting shim on the front bearing bushing of the 2nd shaft could move the bevel pinion backward. (2) Removing the adjusting shim on the left bearing bushing to the right bearing bushing could move the bevel pinion to the right.	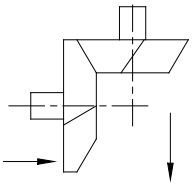

Index:	Description	Bevel pinion meshing mark(forward gear)	Bevel pinion meshing mark(reserve gear)	Adjusting instruction and diagram	
		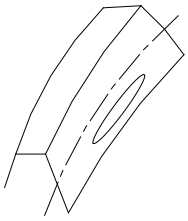	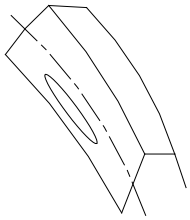	(1) Increasing the adjusting shim on the front bearing bushing of the 2nd shaft could move the bevel pinion forward. (2) Removing the adjusting shim on the right bearing bushing to the left bearing bushing could move the bevel pinion to the left.	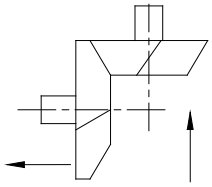

Note: The straight arrow shows the gear moving direction.

5.6 Adjustment of traveling and steering system

5.6.1 Precaution for full hydraulic steering system

LOVOL series 4-wheel drivetractor adopts full-hydraulic steering, as shown in figure.Before delivery, the steering system is already adjusted.Please take note the following items during operation.

- Frequently check the each threaded connection and tighten it if necessary.When full-hydraulic steering system is working, there should be no leakage at each connection.
- During operation, if steering is heavy or failure, please firstly find out the cause. Do not forcefully rotate the steering wheel. Never dismantle steering gear to avoid damage of parts.Never rotate the steering wheel by two persons.
- When installing full-hydraulic steering system, steering gear and steering shaft should be at the same axial line with clearance at axial direction.After installation, check the steering wheel for flexible rotating.
- Keep the oil clean.Therefore frequently check the filter element and oil level.Inspection method: drop an oil droplet on the blotter. If there is a black center on the blotter, change the oil.
- After changing oil, please vacuum the cylinder.Air bleeding method: loosen the steering cylinder bolt to bleed air with oil pump at low speed until there is no bubble emerged in oil.Disconnect the link between the steering cylinder piston rod and steering wheel. Rotate the steering wheel to let the piston at the leftmost or rightmost (do not stay at the both extreme positions).
- A flow dividing valve is of sophisticated parts and not allowed to be dismantled without permission. If removing it, please use clean gasoline or kerosene at clean site.
- Before delivery, the flow dividing valve is already adjusted. Do not remove and adjust it by yourself.

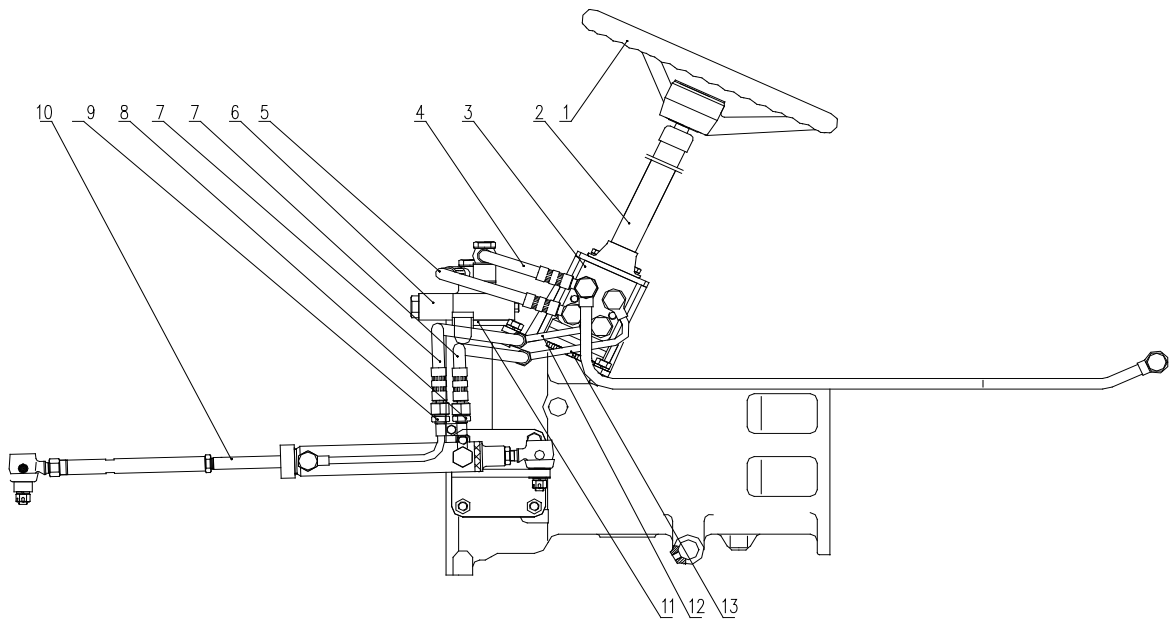

Fig.5-7 Full hydraulic steering system

1. Steering wheel assembly; 2. Steering column assembly; 3. Hydraulic steering gear; 4. Diverter valve oil return line; 5. Oil inlet pipe of steering gear; 6. Stable splite-flow valve of single line; 7. Oil cylinder hose assembly; 8. Left transition pipe of cylinder; 9. Right transition pipe of cylinder; 10 Drag link and steering cylinder assembly; 11. Welded bracket of splite-flow valve; 12. Right pipe of cylinder; 13. Left pipe of cylinder

5.6.2 Front drive axle main drive adjustment

Normal axial clearance between front wheel bearings 8 and 9 is 0.05~0.15mm. During the operation, if the clearance is greater than 0.4mm, the front wheel of the tractor will move from side to side and the bearing may be damaged by the impact. Therefore, it is necessary to adjust the clearance immediately. When adjusting, prop up the front wheel above the ground, remove bearing cap and pull out split pin 7 of nut 6. Screw nut 6 until the clearance disappears, return nut 6 by 1/15~1/7 circle, then lock nut 6 with split pin 7 and install bearing cap.

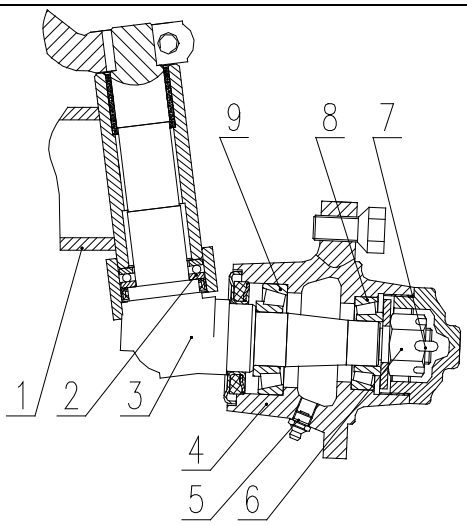

Figure 5-8 Front Wheel Hub

1. Front Shaft Bushing 2. Thrust Bearing 3. Steering Knuckle
4. Front Wheel Hub 5. Oil Cup 6. Nut 7. Split Pin
8. Bearing 9. Bearing

5.6.3 Adjustment for Front Wheel Tread

- Adjustment for two-wheel driven tractor: prop up the front shaft with a jack, remove bolt 1 for left/right inner/outer sleeve and then remove connecting bolt 2 on tie rod. Adjust left/right inner sleeve position and left/right tie rod length. Finally, install bolts and lock the removed bolts. Three options for wheel tread are 1100mm, 1200mm and 1300mm.
- Narrow 1050mm wheel tread is optional;

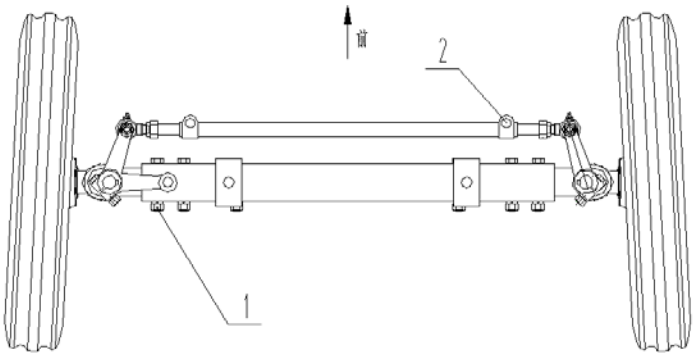

Figure 5-10 Front Wheel Tread Adjustment

5.6.4 Adjustment for Rear Wheel Tread

- Stepless adjustment for rear wheels is achieved by changing fixed position of rear wheel hub on driving shaft. At the same time, step adjustment can be made by turning drive wheel rim over and exchanging left/right drive wheel.

For the first rim installation type, adjustment range of tread is 1050~1260mm.

For the second rim installation type, adjustment range of tread is 1310~1460mm.

- TE series 25-28hp tractor can select 960mm narrow tread;
- TE series 30-32hp tractor can select 1000mm narrow tread.

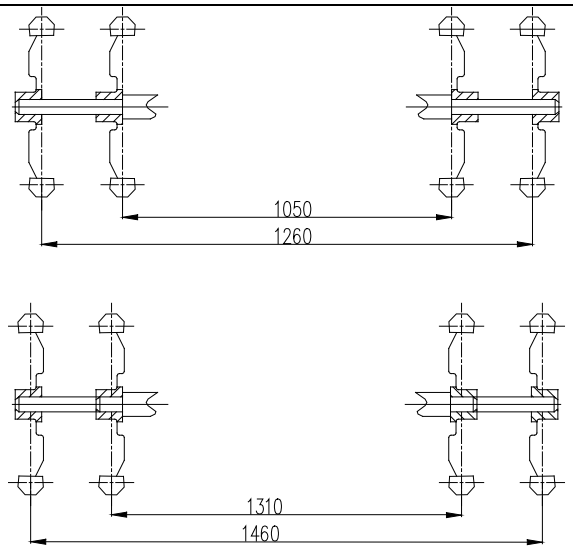

Figure 5-11 Adjustment of Rear Wheel Tread

5.7. Adjustment of front drive axle

5.7.1 Front drive axle main drive adjustment

- The 2 tapered roller bearings respectively on the front drive bevel pinion shaft and on the right and left of differential housings are all preload. Any wear of bearing could create axial play at the bevel pinion and differential housing. Accordingly check them periodically every 1600h.The bearing of bevel pinion is adjusted through thickness of adjusting thim to torque the bevel pinion shaft to（0.7～1.0）N·m. Then lock the nut6.

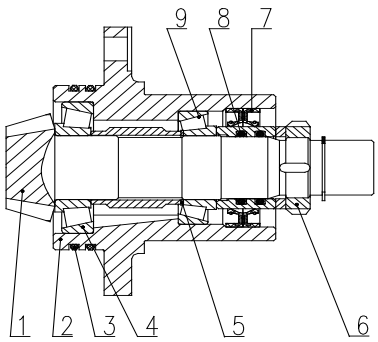

Fig.5-14Front drive axle main drive adjustment

1.Driving bevel pinion shaft 2.Bearing block, driving bevel pinion 3. O-ring 4. Bearing
5.Adjusting shim 6. Nut 7.Oil sealing 8. O-ring 9. Bearing

- The bearing of differential housing can be adjusted as follows: select a proper adjusting shim1, tighten the adjusting nut 2 and retainer mat3. If the rotating torque is greater than that without differential by（1.4～1.7）N·m, the preload amount is proper.At this time, there will be no motion if pushing the bevel gear along with axial line.
- The testing method of backlash and meshing mark is the same as that of rear axle main drive.

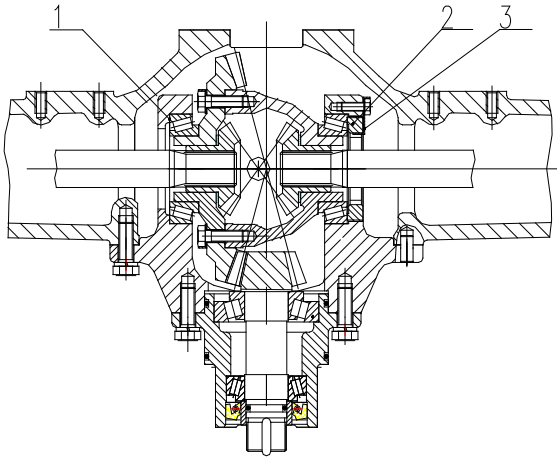

Fig.5-13 Differential housing bearing adjustment
1. Adusting shim 2. Adjusting nut 3. Retainer mat

5.7.2 Front drive axle side drive adjustment

Stage I intermediate drive meshing mark and backlash of between driving gear and driven gear can be adjusted by adjusting shim1; StageII final drive meshing mark and backlash of between the driving gear and driven gear can be adjusted by adjusting shim5.The backlash at both locations is required as （0.25～0.45）mm.

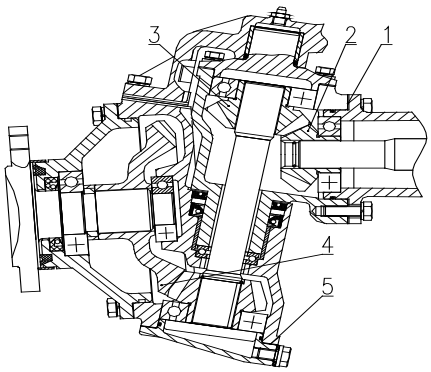

Fig.5-14Front drive axle side drive adjustment
1. Adjusting shim 2.Intermediate drive driving gear 3.Intermediate drive driven gear 4.Final deceleration driven gear 5.Adjusting shim

5.8 Hydraulic lifter adjustment

Place the control lever for agricultural implement lifting and lowering to the neutral position. This ends by adjusting the distance between the stop on the adjusting link and stop pin fixed on the lifting shaft.

5.8.1 Adjustment of agricultutral implement max. position

Firstly rotate the outer lifting arm2 to the lifting direction to make the distance between the lower end of inner lifting arm 3 and check pin 4 on the rear cover of lifter be 5mm (insert a 5mm block in air plug 5). Make sure the distance between the inside the check block 6 and check pin 7 be (9～10)mm, then lock block 6 on thrust rod 8 with the bolt and lock the bolt with nut.

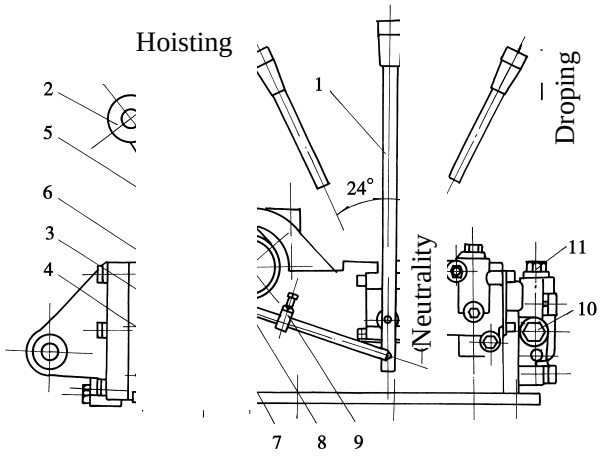

Fig.5-15 Adjustment for lifting position

1. Control handle 2. Outer lifting arm; 3. Inner lifting arm; 4. Check pin; 5. Air plug; 6. Check block; 7. Check pin; 8. Thrust rod; 9. Drop check block; 10. Hydraulic output plug; 11. .Adjusting valve

5.8.2 Adjustment of agricultutral implement min. position

Firstly rotate the outer lifting arm 2 along with lowering direction to min. position (at this time, the piston in the cylinder is pushed near bottom dead center). Then make sure the distance between the stop 5 and stop pin 4 on the link3 should be （9～10）mm.Then use the bolt on the stop4 to lock it on the link.

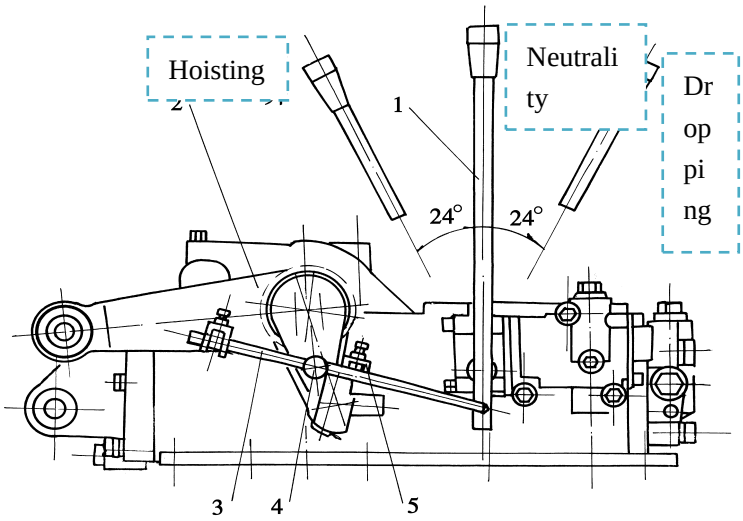

Fig.5-16 Adjustment for descending position

1. Control handle 2. Outer lifting arm; 3. Thrust rod; 4. Check pin; 5. Drop check block;

5.9 Maintenance of battery

- Maintenance of service-free battery

Special maintenance is unnecessary. Observe the inspection hole of electrolyte hydrometer: Green—the battery is well charged; Black-the battery is low; White-the battery is extremely low; In case of Black, the battery shall be charged; in case of White, the battery shall be changed.

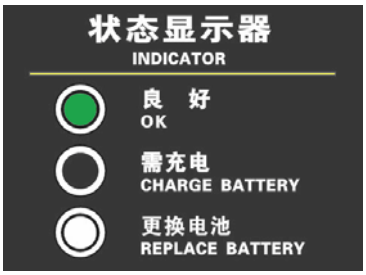

Figure 5-17 Inspection of battery

Warning

The battery electrolyte is corrosive. If it splashes on eyes or clothes, wash with clean water at once and come to the doctor; otherwise it may cause serious injury.

- Precautions of operation and maintenance of battery

1. The battery shall be kept in dry and clean environment where the temperature is 5～40℃ with good ventilation.
2. The battery shall be protected away from sunlight and be at least 2m away from heat (heater).
3. The battery shall be protected against rain, dust and foreign matters as well as shirt circuit.
4. The battery shall be not be horizontally or reversed placed and be protected against mechanical impact or great pressure.
5. The battery shall be fully charged before storage; Low battery is not allowed for storage.
6. The battery shall not be inclined, revered or knocked.
7. Check the voltage every three months. If the voltage is below 12.5V, charge the battery; otherwise it affects the battery service life.
8. Always check the air hole of battery during the operation or storage of battery to avoid deformation or explosion.
9. Good ventilation shall be ensured during charge and discharge of the battery; otherwise the acid mist and flammable gas produced during the charge may hurt the operator and equipment and even cause fire.
10. Always check the color of power densimeter on the battery cover and take proper actions in accordance with the color.

- Way of charging

The battery can be charged at constant current or constant voltage with limited current. For service-free battery, the constant voltage with limited current is preferred.

1. Charging at constant current

Charge the battery at $0.1C_{20}A$ (12A) current to 16V and then charge at $0.05C_{20}A$ (6A) current. When the battery voltage remains unchanged for 1-2 hours, it means the charging is done (voltage difference less than 0.03V) 3V）; or charge the battery to 16V and then charge at 6A current for 3-5 hours.

2. Charging at constant voltage with limited current

Constant voltage 14.8V～15.5V, maximum current $0.25C_{20}A$, namely 30 A; if the current is ≤0.5A, charge the battery for 3 hours; total charging hours shall be not longer than 24.

- Precautions during charging

1. Positive pole and negative pole of battery shall be connected with the positive pole and negative pole of charger respectively.
2. The battery shall be horizontally placed and the wire shall be securely connected.
3. The battery shall be not above 45℃ during charging. If the temperature is high, use water or decrease the current or voltage to reduce the temperature.
4. The charge room shall ensure good ventilation, because it produces flammable hydrogen. If there is 4%--7% hydrogen in the air, it may cause explosion. Smoking is prohibited in the charge room.
5. Short circuit is not allowed when connecting the wires to charge the battery.

Importance: The engine life is directly dependent on the correct use of air cleaner to keep it clean always.During field working, please check, clean and then change oil each shift.If the tractor is equipped with harvester, it is better to use higher grade of filter.Never use the oil-water to flush dry-type filter element during maintenance.

5.10 Fan belt tension adjustment

Use finger to press around the center of belt span by the applied force of (29.4~49.0)N. The pressed distance should be (15±3)mm. If not, please adjust it as the following method:

Loosen the fixing nut on the generator adjusting frame. Push it outward to tension the belt and then tighten the fixing nut on the generator bracket.

Fig.5-18 Adjustment of fan belt tension

5.11 Check and change oil in the engine oil sump

(1) Pull out the dipstick A on the left-front zone of engine oil sump to check whether the oil level is between upper and lower scales.If oil lever is not at lower scale, please fill oil to regulated level.

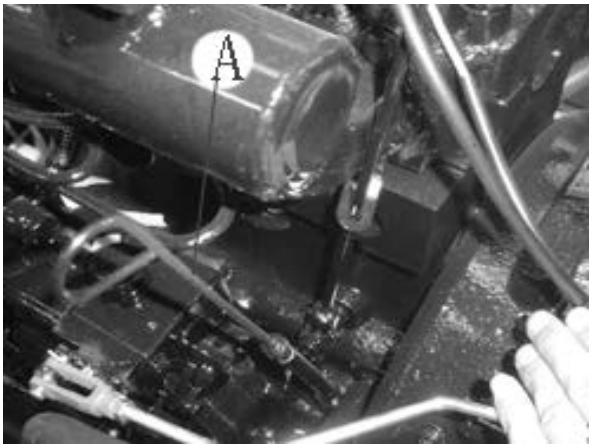

Fig.5-19 Oil level inspection in the engine oil sump

(2)Before changing oil and maintenance, please preheat the engine unitle the oil temperature is up to 50℃～60℃. Screw out the drain plug A on the bottom of oil sump to drain the used oil and clean the sump. Then fill the new oil.

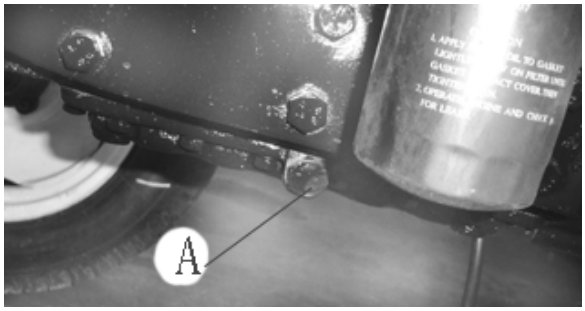

Fig.5-20Oil change in the engine oil sump

Important: never mix the new and used oil and never mix the different grade oil to avoid damage of engine.Change oil strictly in accordance with Diesel Engine Instruction.

5.12 Fuel filter maintenance

Fuel filter is located on the left front side of engine.Paper filter element of filter is not allowed to clean.Replace the filter element every 200h.For detail maintenance, please follow the manufacturer's instruction.

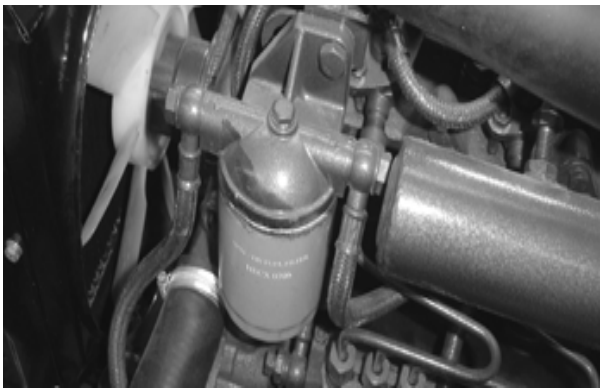

Fig.5-21Fuel filter maintenance

5.13 Oil filter maintenance

Oil filter A is located at the left-lower side of engine. Replace it every 200h according to technical requirement.Please entirely replace the oil filter. Secure it during installing.For detail maintenance, please follow the manufacturer's instruction.

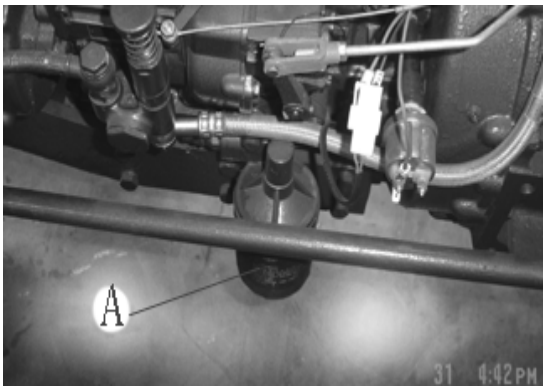

Fig.5-22 Oil filter maintenance

5.14 Oil level inspection of front drive axle

When checking for oil level in the front drive housing, please remove the dipstick "A" to ensure the oil lever is within scale range. If not, fill oil.When changing oil, screw out the drain plugs at main drive and final drives at the left and right to drain the used oil. Tighten the plug again. The oil should be filled from "A". After a while, oil overflowing from B shows that the oil is filled up.

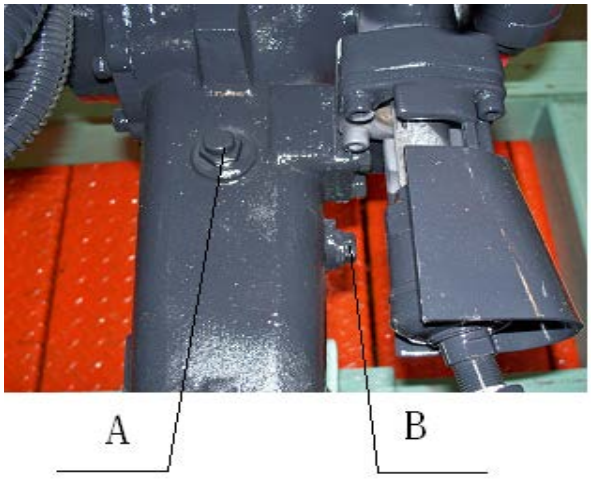

Fig.5-23 Oil level inspection of front drive

5.15 Fuel tank maintenance

● Park the tractor on the flat ground. Shut down the engine. Then remove the drain plug A on the bottom of fuel tank to drain the deposition in fuel tank.	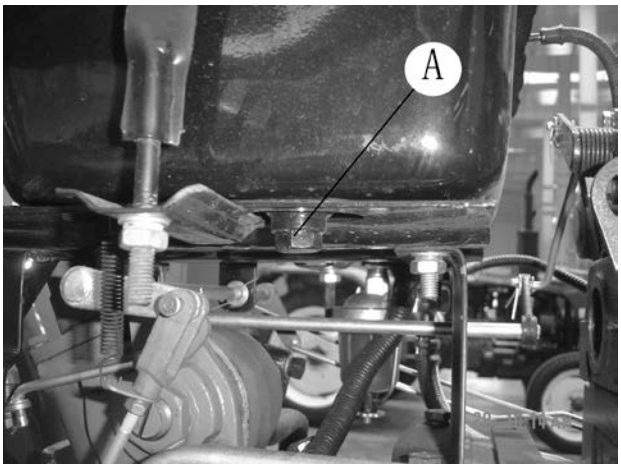 Fig. 5-24 **Fuel tank maintenance**
● Fuel tank sediment cup has functions of water and impurity sedimentation. Sediments in sediment cup B at the bottom of fuel tank shall be discharged during maintenance.	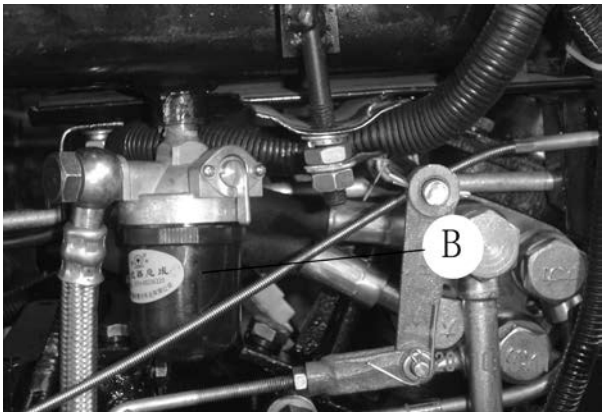 Figure 5-25 Fuel Tank Sediment Cup

5.16 Tire pressure inspection

Use barometer to check the tire pressure that should meet the TE Series Tractor Operation Manual 8 Technical Specification.

Caution: The excessive high/low tire pressure will shorten the tire life, causing harmful effect on tractor traveling and maneuvering.

5.17 Engine cooling system maintenance

The engine coolant can be from boiled tap water or be antifreezeValid duration of antifreeze is two years or 1600h. if exceeding, change the antifreeze, flush the cooling system and fill the new antifreeze.The removing of scale in cooling sytem: add 750 g caustic soda and 150g kerosene in the 10L water, then fill the mix into cooling sytem.Let the engine rotate at intermediate speed for 5-10min and shut it down. Keep the solution stay for 10-12h (note: carry out thermal insulation for winter to avoid freezing). Restart the engine and let it rotate at intermediate speed for 20min. Stop it to drain the solution. When the engine cools down, insert a water pipe into the radiator to flush it. At this time, please open the drain valve on the bottom of radiator.After that, close the drain valve and fill water. Keep the engine running for 20min and drain water again.After engine cooling down, fill the new antifreeze or cooling water to specification.

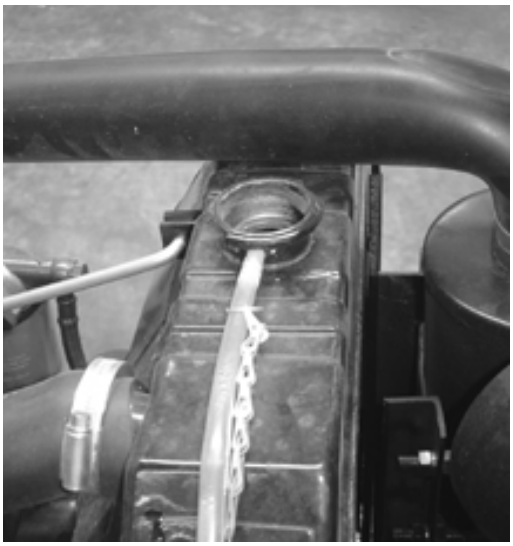

Fig.5-26 Engine cooling system maintenance

Important: in winter, as to the tractor without use of antifreeze, drain the water with engine idling if water temperature is below 70℃, preventing the cooling water freezing related parts.

5.18 Fuel system venting

The air may enter fuel pipe if tractor is out of use for long time, replacing diesel filter element or emptying the fuel tank.The air in the fuel system will lead to difficult start of engine. Vaccum the fuel sytem when the fuel tank is filled up and oil pipeline switch is turned on.

- Loosen the bleed screw A on the fuel filter. Move the fuel delivery pump handle B upward and dowmward until the diesel is overflowed from the bleed screw without bubble emerged.
- Tighten the bleed screw A again and loosen the bleed screw on the fuel injection pump. Finally move the handle B on the fuel delivery pump upward and downward until the diesel is overflowed from the bleed screw without bubble emerged. The the bleed screw C should be tightened.

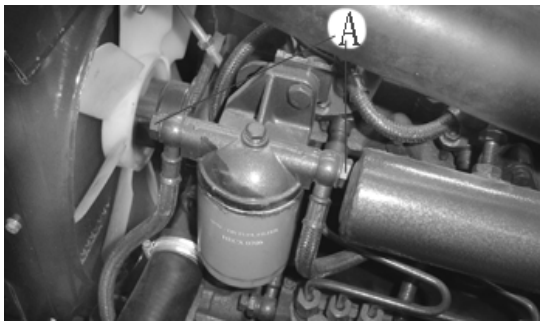

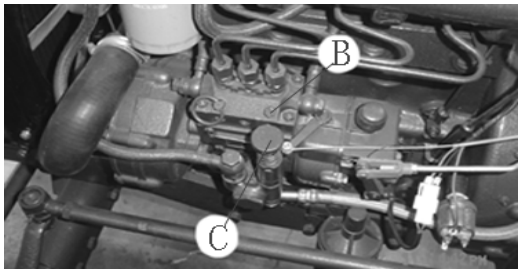

Fig. 5-27 Fuel sytem venting

Important: engine must employ qualified light diesel. Generally, use 0# light diesel for summer and use -10# light diesel for winter.The diesel should be clean and deposited for at least 48h before use. Otherwise, it will shorten the engine life.

6 Storage

After the tractor has completed stage work, or for some reasons, needs to be stopped for a lone time (more than one month), it shall be properly kept or sealed for safekeeping to prevent mechanical parts from corrosion, aging and distortion.

To seal up the tractor for safekeeping, the first step is to clean the tractor thoroughly, adjust and tighten all connecting pieces, then complete required technical maintenances in working hours to make the tractor in good technical state.

Important: During period of long-term shutdown, it is more necessary to have a scientific storage and special maintenance for the tractor. Otherwise, the technical deterioration time of tractor will be faster than working period.

6.1 The reasons of tractor damage in shutdown period

6.1.1 Corrosion and contamination: during shutdown period, dusts and water vapor in the air diffuse into machine by the cracks, holes, etc. to make the parts to be contaminated and corroded; the relative motion surfaces, such as pistons, valves, bearings, gears, etc., will lose mobility and pressure protection from lubricant films after they have been in a stationary state for a long time, thus to produce corrosion, rust, cementation obstruction or stagnation, so scrapped.

6.1.2 Aging: The rubber, if bathed in sunshine, the rubber, plastic and other parts will be easy to aging, deteriorating, become brittle so as to lose activation, or to be corroded.

6.1.3 Distortion: If pressed for a long time, the parts such as drive belt and tire might appear plastics distortion.

6.1.4 Others: The electric components are caused self-discharge.

6.2 Storage of tractor

6.2.1 Prior to storage, check the tractor carefully, and eliminate all existing failures to maintain it in good technical conditions. Then clean up external surface of tractor.

6.2.2 Drain antifreeze and antirust liquid in the heat radiator, cylinder and water pump, and drain the lubricant from power train and hydraulic oil from hydraulic system to let them run out until empty.

6.2.3 Remove the battery and the lubricating grease and store them in a dark and ventilated room at a temperature higher than 10℃.

6.2.4 Drain the oil out of engine while it is hot, refill new oil, and allow small throttle running for several minutes, so that the oil can evenly attach to the surface of all moving parts.

6.2.5 Apply the lubricating grease on all lubricating points.

6.2.6 Heat dehydration Vaseline up to 100~200℃, and apply it on the contacts, connectors of electric components and on the surface of metal parts unpainted.

6.2.7 Loosen fan belt on the engine or remove it when necessary, and wrap it up and store it separately. Then spray antirust agent in the pulley slot. Repair the paint where the paint has fallen off on the tractor.

6.2.8 Drain and clean the diesel tank.

6.2.9 Use protective material (such as canvas, waterproof cloth and oil paper) to seal up the pipe ends of engine, such as inlet, outlet, to eliminate the entry of foreign substances, dusts and water.

6.2.10 Place all the control sticks in neutral position (including electric system switch) with the front wheel in right direction and suspension rods in lower position.

6.2.11 Use wooden frame to support the tractor, in order to release the loads on the front wheel. And regularly check the tire pressure.

6.2.12 The tractor shall be parked in a hangar or car shed with ventilated and dry air. Prohibit to be put them with corrosive substances and gas together. If the conditions are not met, you must choose the dry platform in higher ground for storage when parking in open places, and to cover it with tarpaulin.

6.2.13 Clean up all the parts and provided tools removed from the tractor and wrap them up carefully, then store them in a warehouse with dry air.

6.3 Maintenance during period of sealing-up for safekeeping tractor

6.3.1 During sealing-up period for safekeeping tractor, all the above requirements must be met.

6.3.2 Check once every a month to see if the tractor and parts appear corrosion, aging and distortion, etc., if any, take actions for troubleshooting immediately.

6.3.3 Rotate engine crankshaft for 10~15 turns every 2 months to prevent internal parts from corrosion. Remove the old lubricating grease where the parts need to refilled and put new lubricating grease.

6.3.4 Start tractor to drive for 20-30 minutes once every 3 months, and check all the parts for exception functions at idle speed.

6.3.5 Use a dry cloth wipe up the top surface of battery regularly,. The battery will be self-discharged, even during unused period. It shall be recharged once every month.

Important: If the user doesn’t have the conditions for antirust disposal, and the tractor needs to be shutdown for several months or more, replace oil, oil filter at least, and start it once every 2 months, then check all parts for abnormal functions when driving 20-30 min at idle speed. While keep the surface of tractor clean, dry to prevent machine parts from damage due to corrosion.

6.4 Unseal tractor

6.4.1 Remove the grease used for antirust.

6.4.2 Unclose all pipe ends and clean tractor.

6.4.3 Fill with coolant, oil, diesel and each lubricating point with the grease according to specifications.

6.4.4 Clear antirust agent in fan pulley slot and install pulley belt. Adjust drive belt tension according to technical specification (see the user manual for engine operation and maintenance).

6.4.5 Install battery, and apply Vaseline on connecting terminal.

6.4.6 Check tightness of all circuits, pipelines.

6.4.7 Operate tractor as required in the manual.

Note: More information for sealing-up and unseal engine, see “Operation and Maintenance Manual for the Engine”.

7 Delivery, Acceptance & Transportation

7.1 Delivery and Acceptance

When the user purchases tractor, acceptance inspection shall be performed for the following terms:

- Whether vehicle documents are complete or not

  Vehicle documents include: *The User Manual for Tractor Operation*, *The Product Certificate*, *Three Guarantees certificate*, *A Pack List of Vehicle Items*, and the "Technical Document for Engine" (from the engine manufacturer), *Tractor Parts and Components Schematics Diagram*. Check whether the numbers for *Product Certificate*, *Three-Guarantee Service Certificate* and Technical Document of Engine are consistent with appropriate machine numbers.

- Whether vehicle items are complete or not

  Check items with tractor in accordance with *Pack List of Tractor Items*. These items include spare parts and tools for tractor. These are standardized with specifications of the "Technical Documents for Engine" (if you have any questions, contact with the dealer).

- Whether the tractor is in a good operation state

  The machine might be changed in technical features by shipment. The machine features shall be identified further by user on purchase of machine.

7.2 Transportation

When driving, strictly follow traffic rules for self-propelled movement on the road. The space between two vehicles is at least 60m in order to avoid collision caused by accident; if adopting load shipment, you should ensure:

- Loading and unloading works of tractor are completed on the flat ground.
- Loading and unloading works are performed by special unloading deck. .
- There are on-site assistant in charge of guidance work, and the personnel shall be away from unloading area.
- After loading work has been completed, suspension rod shall be put on the lowest position, pull up hand brake, and engage reverse gear, then pull out start key and lock the door, turn off the switch.
- Position 4 tires by "Eight" type with iron wires, and pad wedges to secure tires, then hook rear axle with iron wire.
- Turn rear-view mirror clockwise as far as possible, or remove it if necessary while the hood, cab door and window are all closed. If the machine is equipped with safety shelf, place the shelf to folded position and secure it firmly.
- Note whether the high limitation is beyond or not when driving over culverts and bridges, and fully decelerate when turning around.
- Release hand brake when unloading goods, engage forward gear, and drive away at lowest speed.

Note:

1. When loading and unloading goods for tractor, the throttle shall be fully depressed and front and rear wheels shall be firmly secured to avoid tractor and operating personnel from sudden overturned accident caused by unexpected start of truck.
2. When performing loading and unloading works, tractor shall drive at lowest speed to avoid tractor overturning from upside or goods falling down caused by higher speed.

8 Technical specifications

8.1product model

Tractor products LOVOL TE series have the meaning as follows:

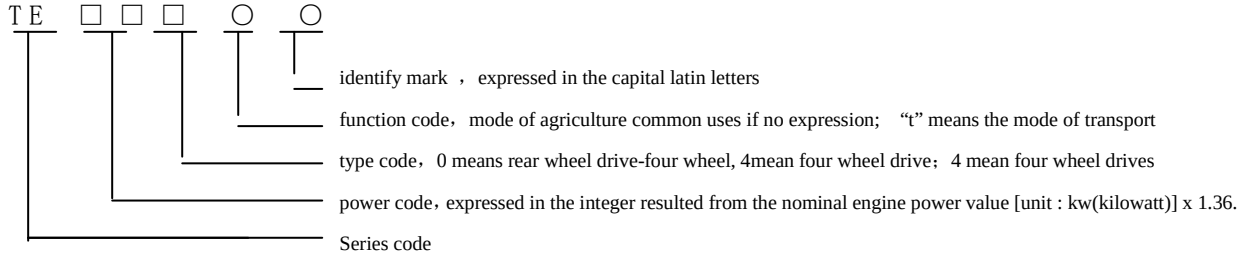

The Contrast Power Values As Follows:

Contrast Power Values To The Product Type:

The Rated Power Of The Wheel Tractors TE254: 18.8kw (Kilowatt) (25PS)

The Rated Power Of The Wheel Tractors TE304: 22.1kw（(Kilowatt) ([30 PS)

The Rated Power Of The Wheel Tractors TE354 : 23.5kw（(Kilowatt) ([[32 PS)

Product Implementing Standard: Q/0704LWZ 001-2015 Wheeled Tractors

8.2 TE Product Technical Specifications

Table 8-1 Two-wheel driven tractor technical specification of LOVOL-TE series

Items		Unit	LOVOL Europard		
			TE254	TE304	TE354
Type		——	4×4 Wheel-Type		
Standard Traction Force		kN	6.3	7.2	8.5
Max Power Of Power Output Shaft		kW	16.0	18.8	21.9
Overall Dimension	Length（from counterweight to suspension）	mm	3453		3500
	Width		1475		1515
	Height（to safety frame/cab）		2495/2335		2675/2400
Wheel Track			1639		1796
Wheel Track	Front Wheel		1244		1243
	Rear Wheel		960～1460		1240～1440
Ground Clearance	Min. Ground Clearance（Mm）		270（Oil drain plug of front axle）	290（Oil drain plug of front axle）	310（Oil drain plug of front axle）
	Agriculture Clearance		380 (lower end face of front axle shaft housing)	400 (lower face of rear axle housing)	
Min	Single Side Brake	m	3.2±0.3		3.3±0.3

Technical specifications

Items					Unit	LOVOL Europard		
						TE254	TE304	TE354
Steering Cycle Radius	No Used Single Side Brake					**3.5±0.3**		
Structural Quality		Without the cab			kg	1225	1435	1535
		With the cab				1375	1585	1685
Structural Quality		Without the cab				1400	1600	1700
		With the cab				1550	1750	1850
Mass Distribution Ratio	Front Wheel					630	700	740
	Rear Wheel					770	900	960
Counterweight	Front Counterweight					80	80	80
	Front Counterweight					124	124	124
Engine	Model				——	KM385	KM390	4L22TA
	Type				——	Vertical, water cooled, four stroke diesel engine		
	Number of cylinders				——	3		4
	Bore× stroke				mm	85×90	90×100	85×95
	Rated power				kW	18. 8	22.1	25.7
	Rated rpm				r/min	2350	2300/2400	2350
	Max. torque /speed				N·m/(r/min)	83~100，1650±100	110~125，1700±100	124~132，1650±100
	Fuel consumption at rated operation conditions				（g/kW h）	≤248	≤245	≤248
	Oil consumption at rated operation conditions					≤2.04	≤1.47	≤2.04
	Way of lubrication				——	By pressure		
	Way of starting				——	Electrical Strating		
Gears					——	8+8		
Rear Wheel Drive Specification					——	9.5-24	9.5-24/11.2-24	11.2-24/12.4-24
	Shuttle gears	Forward Gear	Low	1		1.72	1.62/1.71	1.78/1.91
				2		2.60	2.45/2.57	2.69/2.89
				3		4.08	3.84/4.04	4.23/4.53
				4		5.63	5.30/5.57	5.83/6.25
			High	1		7.97	7.50/7.89	8.25/8.85
				2		12.02	11.30/11.90	12.44/13.34
				3		18.88	17.76/18.69	19.54/20.96
				4		26.02	24.48/25.76	26.93/28.89
		Backward Gear	Low	1		1.61	1.51/1.59	1.66/1.78
				2		2.42	2.28/2.40	2.51/2.69
				3		3.80	3.58/3.77	3.94/4.22
				4		5.24	4.93/5.19	5.43/5.82
			High	1		7.42	6.98/7.35	7.68/8.24
				2		11.19	10.53/11.08	11.59/12.43
				3		17.58	16.54/17.41	18.20/19.52

Technical specifications

Items			Unit	LOVOL Europard		
				TE254	TE304	TE354
		4		24.24	22.80/24.00	25.09/26.91
Drive System	Clutch		——	Double disks, dry, disk spring pressed, constant engaged, metal and ceramic friction plate, in-dependent dual action clutch		
	Gearbox		——	Mechanical transmission case composed of two shafts; 8F+8R shuttle gear shifting or synchronizer with shuttle gear shifting (8 forward gears and 8 reverse gears), sliding gear shifting;		
	Rear Axle	Central Drive	——	Bevel Gear		
		Differential	——	Closed-Type，4 Bevel Planet Gears		
		Differential Lock	——	Dental Clutch		
		Rear Final Drive	——	Built-In, Single Stage Straight Teeth Column Gear		
Traveling System	Frame		——	Half frame		
	Tire Pressure	Front Wheel	kPa	120～150		
		Rear Wheel		120～150/150～180(11.2-24、12.4-24)		
	Tire Specification	Front Wheel	——	6.0-16	6.5-16	7.5-16
		Rear Wheel	——	9.5-24	11.2-24	12.4-24
Steering System	Way		——	Front-wheel steering (maximum 40°, toe-in 4-10mm)		
	Steering gear		——	Cycloid rotary valve all hydraulic steering gear		
Brake System	Traveling Brake		——	Shoe Brake		
	Parking Brake		——	Parking Brake		
	Trailer Brake Control		——	Charging Brake		
Work Device	Hydraulic System Type		——	Open-Core, Independent-Type		
	Hydraulic Pressure Oil Pump		L/min	24		36
	Distributor		——	Side Valve Type		
	Oil Tank	Diameter× Stroke	mm	70（75、85）×105		
		Form		Single-Action		
	Overhang Mechanism		——	Three-Points Rear Suspension, Ⅰ Type		
	Tilling Depth Adjustable Way		——	Position Control And Float Control		
	Max Lifting Force（frame		kN	≥5.2	≥6.2	≥7.2
	Open Pressure Of System Safety Valve		MPa	17.5～18.0		
	Hydraulic Output	Form	——	Post Built-In		
		Quantity	——	Single-Way Hydraulic Output(Optional Two-Way Valves)		
		Specification	——	M22×1.5 Or NPT1/2		
Power Output Shaft	Form		——	Rear positioned, non-independent-Type		
	Specification		——	Φ35，6 rectangular Tooth Clutch Spline Shaft（OptionalΦ35，8 Rectangular Tooth Clutch Spline Shaft）		
	Revolution		r/min	540/1000（Optional 540/760）		
Traction	Traction	Form	——	Rocker rod		

Technical specifications

Items			Unit	LOVOL Europard		
				TE254	TE304	TE354
And Pulling Device	Device	Ground clearance	mm	220～420	330～500	
	Trailer Coupling		——	U-Hanger		
Cab, optional			——	Closed cab (heater optional)		
Safety Shelf			——	Two-column		
Drive Seat			——	Mechanical floating, PVC surface, the seat can be adjusted forward and backward and the backrest is adjustable		
Electrical Equipment Instrument System	Electrical System		——	12V Negative Pole Bonding Double-Wire		
	Generator	Model	——	JFW15	JF11A	L375-12100-4CorL480Q-12100J-1C
		Voltage	V	14		
		Power	kW	0.35or0.5		
	Battery	Model	——	95D31		
		Voltage	V	12		
		Capability	A·h	90		
		Quantity	——	1		
	Light And Signal Device	Headlight	——	12V，55/60W, combined		
		Front Steering Light	——	12V，21W，2		
		Grouped Light	——	12V, Brake Light21w，Rear Position Light5w, Steering Lamp21w, 2 for each		
		Rear Work Light	——	12V，28W，1		
		Trailer Socket	——	7-hole Trailer Socket，1		
	Monitor And Warning Device	Instrument	——	Common combined instrument, or practical power combined instrument		
		Warning Device	——	Signal Light And Device：Brake Light, Left And Right Steering Lamp, Front /Rear Position Light, Reflector, Safety Warning Identifier		
Perfusion Capability	Radiator		L	10		
	Fuel Tank			32		
	Oil Sump Of Engine			5		6
	Transmission Case For Oil			20		
	Raiser For Oil			9.5		11
	Radiator			6		

9 Disassembly and Disposal

In favor of your safety and social environment protection, the used machine shall be returned to the recycling company with professional license for disassembly and disposal after the service life of complete machine expires.

During disassembling, the machine shall be disassembled in turn from up to down and then from exterior to interior. When dismounting large or heavy objects, special hoister must be used. The used battery shall be returned to the professional battery recycling company. Waste oil shall be collected for reasonable disposal. Do not freely dump anywhere to pollute environment.

Warning: The battery electrolyte is corrosive and maintenance-free type, and can not be splashed into the eyes, never touch with skin, clothes, if so, the acid must be washed with water immediately, and seek for medical treatment as soon as possible. Scrapped, damaged batteries is prohibited dismantling, and shall be processed by the professional manufacturers.

Important:

Do not discard the used battery acid anywhere in order to prevent environmental pollution;

The used oil is waste fuel oil. Do not discard it anywhere in order to prevent polluting environment.

We remind you that improper displacement when or after the machine is disassembled may cause injury in the absence of special tools for disassembly or if you have no practical operational experience.

Warning:

When dismounting large or heavy objects, you should use special lifting slings to ensure personal safety!

10 Guarantee Items

10.1 Basis for product guarantee

LOVOL series wheeled tractors are guaranteed according to the following documents and regulations.

Repair, Exchange and return Liability Provisions for Agricultural Mechanical Products SETC Quality

Product Quality Law of The People's Republic of China

Law of the PRC on the Protection of the Rights and Interests of Consumers

10.2 Conditions for guarantee nonperformance

According to relevant laws and regulations, some conditions are excluded from the range of guarantee. Refer to vehicle document the Three Guarantees Certificate for details.

Note: Some behaviors may lead to invalidation for guarantee items. For details, please refer to *Three-Guarantee Service Certificate.*

Note: Any unauthorized tractor modification carried out by users or tractor application which is out of its purpose specified in the operation manual are not included in the guarantee range provided by the manufacturer. Please pay attention to this.

Note:

1. When providing guarantee service, the user should offer his Three-Guarantee Service Certificate so that the certificate should be kept properly;
2. If there are faults in the machine, please inform distributors with contents as follows for guarantee: product model, manufacturing no., engine model and type, contents included in product nameplate, service time as well as specific fault descriptions;
3. Repair part supply expiry date for three guarantees: it is guaranteed that repair part supply will not stop within five years since the stop production for the product and three-guarantee parts are still in the guarantee range. However, the delivery date for special parts should be determined after consultation within three-guarantee period; after the expiry date for three-guarantee part supply, price and delivery date for supplied parts should be discussed;
4. Make sure to use special parts and oils for the product.

11 Appendixes

11.1 Oil, fuel and solution used for tractor

Table 11-1 Oil, fuel and solution used for tractor

Used parts	Oil, fuel and solution						
Fuel tank	Domestic standard	Meet GB/T 252 light diesel	Over 20 ℃	(4～20)℃	(-5～4)℃	(-14～-5)℃	(-29～-35)℃
			10#	0#	-10#	-20#	-35#
	International standard	Adopt American Society for Testing and Materials fuel D-975, with grade of 2-D at normal temperature and with grade of 1-D at ambient temperature of below 5 ℃.					
Engine oil sump	Domestic standard	Fill fuel according to engine instruction					
	International standard	In accordance with Society of Automotive Engineers, Viscosity is classified into SAE10W-40 below -5 ℃, and SAE15W/40 over -5 ℃Quality should be meets American Petroleum Institute API CD standard					
Engine radiator	If ambient temperature of 4℃ or more： Clean softwater If ambient temperature of 4 ℃ or less Antifreeze liquid must be used If min. ambient temperature of -15 ℃ or more, adopt -25# long effective antifreeze (SH/T0521-1999) If min. ambient temperature of -25 ℃ or more, adopt -35# long effective antifreeze(SH/T0521-1999) If min. ambient temperature of -35 ℃ or more, adopt -45# antifreeze(SH/T0521-1999)						
Oil-bath type air cleaner	Domestic standard	Use 10W/30 if -5℃ or less, use 15W/40 multigrade oil if -5 ℃ or more. CC or CD grade in GB 11122-2006.					
	International standard	In accordance with Society of Automotive Engineers, Viscosity is classified into SAE10W-40 below -5 ℃, and SAE15W/-40 multigrade oil over -5 ℃Quality should be meets American Petroleum Institute API CD standard					
Gearbox- rear axle Hydraulic lifter Front drive axle	Domestic standard	N100D dual-purpose oil used for drive and hydraulic system. Executive standard: Q/LWZ B119-2008					
	International standard	MF1135 from Massey Ferguson Or M2C 86A from Ford Or HY-GARD™ or J20A、J20B、J20C from John Deer					
Brake	Domestic standard	Drive hydraulic brake three-purose oil or SAE10W-40 oil					
	International standard	SAE10W-40 oil					
Oil cup	Domestic standard	General-purpose lithium base grease, subject to GB/T 7324;					
	International standard	SAE general purpose grease is added with 3~5% molybdenum sulfide; Use polar region grease (MIT-G-10924C)if below -30 ℃; Adopt National Lubrication Grease Institute NJGI grease D-217 with 2 viscosity grade;					

Used parts	Oil, fuel and solution

Note:

1. The dual-purpose oil for drive and hydraulic systems, diesel, diesel oil should be deposited for at least 48h to keep its cleanness and ultimate machine performance.
2. During the engine running, do not fill fuel tank. If tractor working under hot or sunlight, do not fill up fuel tank. Once the fuel is spilled, please wipe it at once.
3. Never blend the fuel of different grades and different manufactures to maintain the engine performance.
4. Choose the tractor with heater. Antifreeze must be used for winter to avoid freezing the heater.

Note:

1. During running of the engine, do not fill fuel tank, in order to avoid degerous accident;
2. If tractor is working under hot or sunlight, do not fill up fuel tank, or the fuel will be overflowed due to expansion, once it is the case, please wipe it off at once.

Important: the cooling water shall be clean softwater (such as rain, snow or river etc.). When using hardwater, such as that from wells, springs etc.), fill water tank after it is boiling and precipitating, in order to avoid damage to water tank.

11.2 Main bolt/ nut tightening torque table

Table 11- 2 Main bolt/ nut tightening torque table

Name and Assembly Parts	Thread specification	Grade	Tightening torque N·m
Bolts, nuts for connecting engine and clutch housing	M10	10.9	52~90
Bolts for coupling clutch housing and the rear axle box	M12	10.9	105~156
Bolts for holding bearings of shaft I, shaft II	M10	8.8	37~75
Bolt for connecting drive shaft shell and rear axle housing	M12×1.5	10.9	106~158
Bolts for jointing driven wheel hub and spoke plate	M16×1.5	10.9	240~335
Locknut of front tie rod	M16X1.5	8.8	199~270
Bolt for coupling front outer shaft and inner shaft fittings	M14	8.8	122~185
Bolts for coupling front drive wheel and front wheel hub and spoke plate	M14×1.5	10.9	178~235
Bolts for connecting front axle and bracket	M16	8.8	182~245
Bolts for attaching bracket and engine	M12	8.8	73~110
Bolts for attaching bracket and engine	M14X1.5	8.8	146~205
Bolts for attaching lifter housing and rear axle housing	M10	10.9	52~90
Coupling olt of limit rod bracket	M16	10.9	200~310

Warning: use torque wrench to tighten the main bolts and nuts to avoid possible performance decreasing and personal hazard etc caused by failures to meet tightening torque requirements.

11.3 Tractor roller bearing

Table 11-3 Tractor roller bearing schedule

Item No.	Code	Bearing Name and Specification	Installatin position	Quantity
1	TE250.212-04	Release Bearing 996708K	Clutch Release Bearing	1
2	GB/T276	Deep groove ball bearings 6306	Main transmission assembly	2
3	GB/T276	Deep groove ball bearings 6307N	Main transmission assembly	1
4	GB/T276	Deep groove ball bearings 6307N	Main transmission assembly	1
5	GB/T309	Needle roller 2.5X19.8-G3X-6X-9	Main transmission assembly	28
6	GB/T309	Needle roller 2.5X19.8-G3X-6X-9	Auxiliary transmission assembly	66
7	GB/T297	Bearing 32207	Rear central drive assembly	1
8	GB/T297	Bearing 31307	Rear central drive assembly	1
9	GB/T297	Tapered roller bearing 32011	Differential assembly	2
10	GB/T276	ball bearing 6307	Short axle shaft assembly	1
11	GB/T297	Bearing 32014	Final drive	2
12	GB/T297	Bearing 30211	Final drive	2
13	GB/T276	Deep groove bearing 6207	Dual-speed PTO assembly	1
14	GB/T7918	Needle roller bearing K22X30X20	Dual-speed PTO assembly	1
15	GB/T309	Tapered roller 3x23.8	Dual-speed PTO assembly	78
16	GB/T276	Deep groove bearing 6209	Dual-speed PTO assembly	1
17	GB/T276	Deep groove bearing 6008	Dual-speed PTO assembly	1
18	GB/T 276	Bearing 6205-Z	Transfer case	1
19	GB/T276	Bearing 6304	Transfer case	1
20	GB/T276	Bearing 6205	Transfer case	1
21	GB/T 276	Bearing 6206	Transfer case	1
22	GB/T 5801	Bearing NA4906	Transfer case	2

Item No.	Code	Bearing Name and Specification	Installatin position	Quantity
23	GB/T 276	Bearing 6205-Z	Transfer case	

11.4 Tractor chassis seal:

Table 11-4 Tractor chassis seal schedule

Part	Specification		Installation position	Quantity
1	GB/T3452.1	O ring 10.6X2.65	Transmission case and operation	1
2	TL01372040028	Framed rubber oil sealing PD35X62X12	Transmission case and operation	2
3	GB/T 3452.1	O ring 15X2.65	Differential lock	2
4	GB/T 3452.1	O ring 33.5X3.55	Differential lock	1
5	TS09580010009	O ring 23.6X2.9-M27X2	Dipstick of rear axle housing	1
6	GB/T9877.1	Skeleton oil seal FB60X90X12D	Axle shaft assembly	4
7	GB/T3452.1	O ring 30x2.65	PTO	1
8	GB/T9877.1	oil seal B40x62x8D	PTO	1
9	GB/T3452.1	O ring 80x2.65	PTO	1
10	GB/T 3452.1	O ring 15x2.65G	Brake assembly	1
11	GB/T9877.1	oil seal B50X70X8D	Brake assembly	2
12	GB/T3452.1	O ring 10.6X2.65G	PTO operation	1
13	GB/T3452.1	O ring 45.0X3.55G	Transfer case	1
14	TL01421010022	oil seal FB25X42X10D	Transfer case	2
15	GB/T 3452.1	O ring 15.0X2.65G	Transfer case	1
16	GB/T3452.1	O ring 46.2X3.55G	Drive shaft	1
17	GB/T 3452.1	O ring 53.0X3.55G	Drive shaft	1
18	GB/T9877.1	oil seal FB25X40X7D	Drive shaft	2
19	GB/T 3452.1	O ring 48.7X3.55G	Drive shaft	1
20	GB/T 3452.1	O ring 11.2X1.80G	Operation of transfer case	

11.5 LOVOL series tractor matching implement

Table 11-5-1 LOVOL series tractor matching implement

Type	Tractor model	Agriculture implement	Agriculture implement Type	Main technical features:
Tilling machinery	M254-E M404-E	Mounted 3-furrow plow	1L-320	Tilling depth(140～180)mm
		Mounted 2-furrow plow	1L-325	Tilling depth(200～220)mm
		Mounted 2-furrow plow	1L-227	Tilling depth(140～200)mm
		Rotary tilling machine	1GQN-125	Tilling depth(120～140)mm，Tilling width 1250mm
Tilling machinery		18 gap harrow	1BY-1.8	Tilling depth：(80～100)mm，Tilling width 1800mm
Seeding machine		Seeder	2BJ-4 (soybean, corn)	Sowing 4 rows, row spacing (500～700)mm
			2B-12/16 (wheat)	Sowing 12/16 rows
			2BM-2/4 (cotton)	Film mulch sowing 2/4 rows
		Multi-purpose wheat and corn seeder	2BXY-12/4	Number of rows: 12 for wheat,4 for corn
Paddy-field operation implement		Paddy-field puddling machine	1ZSN-160 1ZSN-180	Tilling depth (80～100)mm
			1BSMQ-14 1BSMQ-16	Tilling depth: (120～160)mm
Spraying machine		Suspended fight drug machine	3W-200/6	Drug kit capacity: 200L，Spray width: 6m
Straw manure		Field straw chopper	4JH-1.0	Working width 1000mm，Stublle (20～80)mm
Stubble cleaner		Stubble cleaner	1GM-2/3	Working width 1250mm, 2 ridges tilling depth (120~150)mm
			1GM-2/3	Stubble crushing blade: 400r/min

Type	Tractor model	Agriculture implement	Agriculture implement Type	Main technical features:
Harvesting machines		Soybean swather	4G-2.4	Cutting width: 2400mm
		Swather	4S-170	Cutting width: 1700mm
Trencher		Chain knife trencher (for models provided with creeper gear)	YLK-20 1KS-30-25	Trenching width : 130/160/200mm Trench subsoiling depth: (500～1600)mm Sulcus shape: 30*200
Trailer		Agriculture trailer	7CH-1.5/2	Load capacity: 1.5/2.0t

Warning: before using the matched agricultural implement, the operator should read the “Operation and Maintenance Manual” in detail to be familiar to structure, performance, operating method and reasonable matching to avoid the agricultural implement and personal accidents.

Important:

1. Prior to purchase of farm machinery, refer to this schedule to select the type, model of suitable farm machinery according to the operating conditions of area (such as soil resistance, agronomic requirements, etc.), more information , consult the distributor, farm machinery manufacturer;
2. According to the model of tractor purchased, in combination with operating conditions (such as soil resistance, agronomic requirements, etc.), and in reference to consulting comments, the primary technical specification for farm machinery shall be identified, to achieve a reasonable matching construction. If it is unsuitable, this can bring adverse affect on machine unit;
3. The operating efficiency of machine unit varies according to different operating conditions (such as soil resistance, agronomic requirements, etc.). In order to ensure the best operation efficiency and performance of machine, the user should determine the operating speed and width in a reasonable way, which depends on local geographical conditions.

12 Index

A

Safety rules and usage precautions 1

Safety warning signs 5

Safety Precautions 1

B

Guarantee Items 96

Conditions for guarantee nonperformance 96

C

Operation Instruction 10

Product Identification 9

Differential lock operation 20

Disassembly and dispose 95

Basis of product warranty 96

Product description 11

Product model 77

Storage 73

D

Chassis failure and troubleshooting 34

Use of electrical equipment 29

Electrical system fault and troubleshooting 41

Special maintenance for winter 49

PTO idling running-in 32

F

Engine start 16

Start the tractor 18

Engine idling running-in 32

Engine cooling system maintenance 71

Preparations for engine start 16

Check and change oil in the engine oil sump 67

Fan belt tension adjustment 66

Accessories, Spare and Wearing Parts 45

Appendixes 97

G

Application and maintenance of dry air filter 66

Height adjustment 24

H

Adjustment for Rear Wheel Tread....63

J

Oil filter maintenance....68
Technical maintenance procedures....47
Technical Specifications....82
Two-wheel driven tractor technical specification of LOVOL-TE series....82
Four-wheel driven tractor technical specification of LOVOL-TE series....86
Technical specification of TE series tractor....93
Driver's seat adjustment....23
Delivery, acception, transport, assembly and installation....81
Delivery and Acceptance....81

L

LOVOL-TE series tractor matching implement....103
Clutch adjustment (single-acting)....51
Clutch adjustment (double-acting)....52
Clutch adjustment....72
Tire pressure inspection....51
Clutch failures and troubleshooting....70
Tire removal....22
Tire use....21
Tire use and removal and installation....21

M

Technical maintenance each shift....47
Technical maintenance after running-in....33
Preparations for running-in....32
Technical maintenance Every 50h....47
Technical maintenance Every 200h....47
Technical maintenance Every 400h....48
Technical maintenance Every 800h....48
Technical maintenance Every 1600h....49

N

Adjustment of agricultutral implement min. position....64
Adjustment of agricultutral implement max. position....64

P

Counterweight usage....23
Maintenance of battery....65

Q

Start the engine 17
Adjustment for Front Wheel Tread.....62
Front wheel toe in adjustment.....61
Front wheel bearing clearance adjustment.....61
Front drive axle side drive adjustment.....63
Adjustment of front drive axle.....62
Front drive axle usage.....20
Front drive axle main drive adjustment 62
Oil level inspection of front drive axle 68
Precaution for full hydraulic steering system 60

R

Fuel filter maintenance 67
Fuel system venting 71
Fuel tank maintenance 70

S

Vehicle part.....45
Vehicle part schedule.....45
Vehicle document list 45
Front wheel tread of 4-wheel driving tractor 63

T

Trailer air brake adjustment.....54
Tractor maneuvering mechanism.....11
Tractor maneuvering mechanism and instrument.....11
Tractor maintenance for long-time store 49
Tractor common failures and troubleshooting.....34
The reasons of tractor damage in shutdown period 73
Tractor gear shift 19
Tractor running-in.....32
Tractor braking 21
Tractor chassis seal.....94
Storage of tractor 73
Maintenance during period of sealing-up for safekeeping tractor 74
Tractor idling and running-in with load.....33
Unseal tractor.....74
Tractor roller bearing.....99
Engine start.....18

Tractor stopping and engine flameout 21
Oil, fuel and solution used for tractor 91
Tractor steering.....18
Two-wheel driven tractor technical specification of LOVOL-TE series.....82
Four-wheel driven tractor technical specification of LOVOL-TE series.....86
W
Instruction of maintenance 47
Position adjustment.....23
X
Use of Linkage.....26
Battery starting 17
Linkage size.....27
Y
Hydraulic output and operation of hydraulic lock 24
Hydraulic lifter adjustment 64
Hydraulic system running-in 32
Use of hydraulic lifting system.....23
Combination instrument and switch 12
Wearing parts.....46
Adjustment of meshing mark and backlash of bevel gear pair. 57
Transportation.....1
Z
Brake adjustmen 53
Main drive adjustment 56
Adjustment of steering and traveling system.....59
Adjustment of pre-tension of cone bearing.....56

Dear customers:

Thank you for your patronage and welcome to select and use LOVOL TE series wheeled tractors. We'd like to provide you with wholehearted service and solve your problems during tractor application to fulfill your demand to the greatest extent and provide excellent customer service.

We'd like to delivery this "Customer feedback information sheet" with the tractor instruction to you. Please fill in the form with regular script and send it in a registered letter to three-guarantee service department of Agricultural Implement Business Unit of LOVOL Heavy Industry Co., Ltd. at No.192 Beihai Road (south), Weifang, Shandong, China. Post code: 261206. Our company will input your *Customer Feedback Information Sheet* into computer and save it up for the following implementation of "three-guarantee service" for you.

Thank you for your cooperation and support!

Customer Feedback Information Sheet

Product model		Tractor Manufacturing No.			Engine manufacturer		
Engine No.		Date of manufacture			Purchase date		
Customer		Age		Educational level		Years of driving experience	
Home address				Telephone No.		Post code	
Main purpose after purchase				Tractor load			
Time and cause for fault occurrence							
Name and status for damaged parts							
Comments and suggestions for product improvement							

Note: This feedback information sheet should be filled by the machine owner (or operator) truthfully for our easy understanding tractor service condition for our better customer service. This feedback information sheet is still valid in its copy. Therefore, please fill in the copied sheet.

https://truckmanualshub.com/

LOVOL

LOVOL

Operation Manual for TE Series Wheeled Tractor

Please read this operation manual carefully before using this tractor.

Add: No.192 Beihai Road (south), Weifang, Shandong, the People's Republic of China
Tel: 0086-536-7638885
Fax:0086-536-2288906
Service hotline: 4008656865
E-mail: nzyx@lovol.com.cn
Web site: http://www.fotonlovol.com.cn

The People's Republic of China
Lovol Heavy Industry Co., Ltd.