https://truckmanualshub.com/

Kubota

U.S.A. : **KUBOTA TRACTOR CORPORATION**
3401 Del Amo Blvd., Torrance, CA 90503, U.S.A.
Telephone : (310)370-3370
Western Division : 1175 S. Guild Avc., Lodi, CA 95240
Telephone : (209)334-9910
Central Division : 14855 FAA Blvd., Fort Worth, TX 76155
Telephone : (817)571-0900
Northern Division : 6300 at One Kubota Way, Groveport, OH 43125
Telephone : (614)835-1100
Southeast Division : 1025 Northbrook Parkway, Suwanee, GA 30024
Telephone : (770)995-8855

Canada : **KUBOTA CANADA LTD.**
5900 14th Avenue, Markham, Ontario, L3S 4K4, Canada
Telephone : (905)294-7477

France : **KUBOTA EUROPE S.A.S**
19-25, Rue Jules Vercruysse, Z.I. BP88, 95101 Argenteuil Cedex, France
Telephone : (33)1-3426-3434

Italy : **KUBOTA EUROPE S.A.S Italy Branch**
Via Grandi, 29 20068 Peschiera Borrome (MI) Italy
Telephone : (39)02-51650377

Germany : **KUBOTA (DEUTSCHLAND) GmbH**
Senefelder Str. 3-5 63110 Rodgau /Nieder-Roden, Germany
Telephone : (49)6106-873-0

U.K. : **KUBOTA (U.K.) LTD.**
Dormer Road, Thame, Oxfordshire, OX9 3UN, U.K.
Telephone : (44)1844-214500

Spain : **KUBOTA ESPAÑA S.A.**
Avenida Recomba No.5, Poligno Industrial la Laguna, Leganes, 28914 (Madrid) Spain
Telephone : (34)91-508-6442

Australia : **KUBOTA TRACTOR AUSTRALIA PTY LTD.**
25-29 Permas Way, Truganina, VIC 3029, Australia
Telephone : (61)-3-9394-4400

Malaysia : **SIME KUBOTA SDN. BHD.**
No.3 Jalan Sepadu 25/123 Taman Perindustrian Axis,
Seksyen 25, 40400 Shah Alam, Selangor Darul Ehsan Malaysia
Telephone : (60)3-736-1388

Philippines : **KUBOTA PHILIPPINES, INC.**
155 Panay Avenue, South Triangle Homes, 1103 Quezon City, Philippines
Telephone : (63)2-9201071

Taiwan : **SHIN TAIWAN AGRICULTURAL MACHINERY CO., LTD.**
16, Fengping 2nd Rd, Taliao Shiang Kaohsiung 83107, Taiwan R.O.C.
Telephone : (886)7-702-2333

Indonesia : **PT KUBOTA MACHINERY INDONESIA**
Tower A at EightyEight@Kasablanka Lantai 16
Jalan Raya Casablanka Kav. 88, Jakarta 12870 Indonesia
Telephone : (62)-21-29568-720

Thailand : **SIAM KUBOTA CORPORATION CO., LTD.**
101/19-24 Moo 20, Navanakorn Industrial Estate, Tambon Khlongnueng, Amphur Khlongluang,
Pathumthani 12120, THAILAND
Telephone : (66)2-909-0300

Korea : **KUBOTA KOREA CO., LTD.**
106-24 Mongsan-Ri, Mankyung-Up, Kimje-City, Chonrapuk-Do, KOREA
Telephone : (82)-63-544-5822

India : **KUBOTA AGRICULTURAL MACHINERY INDIA PVT. LTD.**
Regus, Level 2 Altius, Olympia Tech Park, No.1 SIDCO Industrial Estate, Guindy, Chennai 600032, TN, India
Telephone : (91)-44-4299-4237

Vietnam : **KUBOTA VIETNAM CO., LTD.**
Lot B-3A2-CN, My Phuoc 3 Industrial Park, Ben Cat District, Binh Duong Province, Vietnam
Telephone : (84)-650-3577-507

KUBOTA Corporation

AS . E . 2-2 . - . AK

English
Code No. K3011-7123-2

Z122E.Z121S.Z125E.Z125S

OPERATOR'S MANUAL

KUBOTA

ZERO TURN MOWER

MODELS Z122E
Z121S
Z125E
Z125S

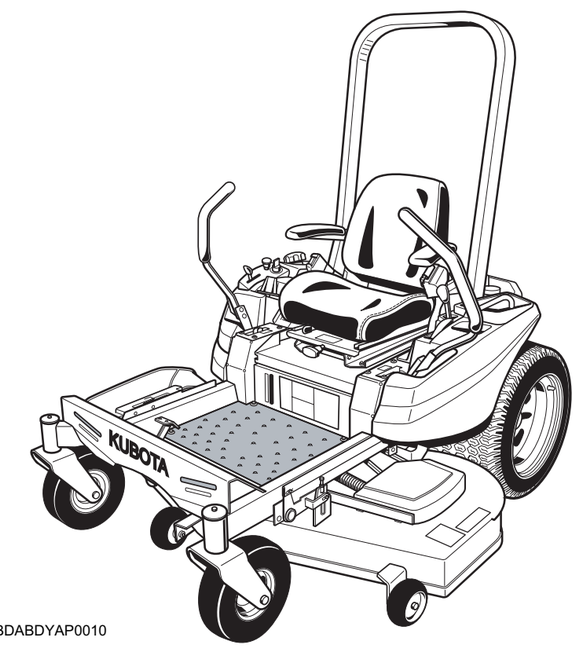

1BDABDYAP0010

READ AND SAVE THIS MANUAL

Kubota

PRINTED IN U.S.A.

© KUBOTA Corporation 2013

https://truckmanualshub.com/

ABBREVIATION LIST

Abbreviations	Definitions
API	American Petroleum Institute
PTO	Power Take Off
RH/LH	Right-hand and left-hand sides are determined by facing in the direction of forward travel
ROPS	Roll-Over Protective Structures
rpm	Revolutions Per Minute
SAE	Society of Automotive Engineers

UNIVERSAL SYMBOLS

As a guide to the operation of your machine, various universal symbols have been utilized on the instruments and controls. The symbols are shown below with an indication of their meaning.

- Safety Alert Symbol
- Read Operator's Manual
- Gasoline Fuel
- Fuel-Level
- Parking Brake-Engaged position
- Parking Brake-Disengaged position
- Engine-Stop
- Engine-Run
- Starter Control
- Power Take-Off Switch Control-Off Position (Disengaged)
- Power Take-Off Switch Control-On Position (Engaged)
- Hours
- Cutting Height
- Fast
- Slow
- Engine Speed Control
- Choke

California Proposition 65

⚠ WARNING ⚠

Engine exhaust, some of its constituents, certain vehicle components and fluids, contain or emit chemicals known to the State of California to cause cancer and birth defects or other reproductive harm.

IMPORTANT

The engine in this machine is not equipped by the manufacturer with a standard spark arrester.
It is a violation of California Public Resource Code Section 4442 to use or operate this engine on or near any forest-covered, brush-covered land, or grass- covered land unless the exhaust system is equipped with a working spark arrester meeting state laws. Other states or federal areas may have similar laws.

This spark ignition system complies with Canadian ICES-002.

KUBOTA Corporation is ···

Since its inception in 1890, KUBOTA Corporation has grown to rank as one of the major firms in Japan.

To achieve this status, the company has through the years diversified the range of its products and services to a remarkable extent, until today, 19 plants and 16,000 employees produce over 1,000 different items, large and small.

All these products and all the services which accompany them, however, are unified by one central commitment. KUBOTA makes products which, taken on a national scale, are basic necessities. Products which are indispensable, products intended to help individuals and nations fulfill the potential inherent in their environment. For KUBOTA is the Basic Necessities Giant.

This potential includes water supply, food from the soil and from the sea, industrial development, architecture and construction, transportation.

Thousands of people depend on KUBOTA's know-how, technology, experience and customer service. You too can depend on KUBOTA.

https://truckmanualshub.com/

FOREWORD

You are now the proud owner of a KUBOTA ZERO TURN MOWER. This machine is a product of KUBOTA's quality engineering and manufacturing. It is made of excellent materials and under a rigid quality control system. It will give you long, satisfactory service. To obtain the best use of your machine, please read this manual carefully. It will help you become familiar with the operation of the machine and contains many helpful hints about machine maintenance. It is KUBOTA's policy to utilize, as quickly as possible, every advance in our research. The immediate use of new techniques in the manufacturing of products may cause some small parts of this manual to become outdated. KUBOTA distributors and dealers will have the most up-to-date information. Please do not hesitate to consult them.

SAFETY FIRST

This symbol, the industry's "Safety Alert Symbol", is used throughout this manual and on labels on the machine itself to warn of the possibility of personal injury. Read these instructions carefully. It is essential that you read the instructions and safety regulations before you attempt to assemble or use this unit.

DANGER : Indicates an imminently hazardous situation which, if not avoided, will result in death or serious injury.

WARNING : Indicates a potentially hazardous situation which, if not avoided, could result in death or serious injury.

CAUTION : Indicates a potentially hazardous situation which, if not avoided, could result in minor or moderate injury.

IMPORTANT : Indicates that equipment or property damage could result if instructions are not followed.

NOTE : Gives helpful information.

https://truckmanualshub.com/

CONTENTS

⚠SAFE OPERATION ..... ⚠-1
SERVICING OF MACHINE 1
SPECIFICATIONS 3
IMPLEMENT LIMITATIONS 5
INSTRUMENT PANEL AND CONTROLS 6
MOWER MOUNTING 8
MOUNTING THE MOWER DECK 8
ADJUSTING THE MOWER 8
DISMOUNTING THE MOWER DECK 8
OPERATING THE ENGINE 9
MOUNT AND DISMOUNT MACHINE SAFELY 9
STARTING THE ENGINE 9
Throttle Lever 11
Key Switch 11
CHECK DURING OPERATING 12
Immediately Stop the Engine if: 12
Fuel Gauge 12
Hour Meter 12
COLD WEATHER STARTING 12
WARMING UP 13
Warm-up and Transmission Oil in the Low Temperature Range 13
JUMP STARTING 13
STOPPING THE ENGINE 14
OPERATING THE MACHINE 15
OPERATING NEW MACHINE 15
Changing Lubricating Oil for New Machines 15
Engine Break-in 15
Machine Break-in 15
STARTING 16
Operator's Seat 16
Seat Belt 16
Light Switch 16
Mower Lift Pedal 17
Throttle Lever 17
Parking Brake Lever 17
Motion Control Lever 18
STOPPING 20
PARKING 20
TRANSPORTING 21
Hydrostatic Transaxle Bypass Rods 21
OPERATING THE MOWER 22
MAKING THE MOST OF YOUR MOWER 22

https://truckmanualshub.com/

ADJUSTING CUTTING HEIGHT 22
OPERATING MOWER 23
PTO Switch 23
Starting 24

TIRES AND WHEELS 25
TIRES 25
Inflation Pressure 25
WHEELS 25
Remove and Install Front Caster Wheels 26

MAINTENANCE 27
SERVICE INTERVALS 27
LUBRICANTS AND FUEL 30

PERIODIC SERVICE 31
HOW TO RAISE THE OPERATOR'S SEAT 31
DAILY CHECK 32
Checking Engine Oil Level 32
Checking Amount of Fuel and Refueling 33
Checking and Cleaning Air Intake Screen 34
Checking Tire Pressure 34
Inflation Pressure 34
Checking Transaxle Fluid Level 35
Checking Movable Parts 35
EVERY 25 HOURS 36
Cleaning Precleaner Element (Except Z125E) 36
Cleaning Air Cleaner Element (Z122E, Z125E) 37
EVERY 50 HOURS 39
Checking Engine Start System 39
Checking OPC System 40
Checking Carbon Canister Air Filter 40
Changing Engine Oil (Z122E, Z125E) 41
Replacing Engine Oil Filter (Z122E, Z125E) 42
Checking Muffler and Spark Arrester (if equipped) 43
EVERY 100 HOURS 43
Changing Engine Oil (Z121S, Z125S) 43
Replacing Precleaner Element (Except Z125E) 44
Replacing Air Cleaner Element (Z122E, Z125E) 44
Replacing Air Cleaner Element (Z121S, Z125S) 44
Cleaning Engine Shroud 45
Checking Spark Plug 46
Checking Fuel Lines 47
Battery Condition 48
Adjusting Throttle Cable 50
Replacing Engine Oil Filter (Z121S, Z125S) 51
EVERY 200 HOURS 52
Checking Hydraulic Hose 52
EVERY 400 HOURS 53
Replacing Transaxle Oil Filter Cartridge 53
Changing Transaxle Fluid 54
EVERY 500 HOURS 54

https://truckmanualshub.com/

Electric Clutch Adjustment 54
Checking Engine Valve Clearance (Z121S, Z125S) 55
EVERY AFTER 500 HOURS 55
Cleaning Combustion Chamber 55
EVERY 1 YEAR 55
Replacing Precleaner Element (Except Z125E) 55
Replacing Air Cleaner Element (Z122E, Z125E) 55
Replacing Air Cleaner Element (Z121S, Z125S) 55
Changing Engine Oil (Z122E, Z125E) 55
Replacing Engine Oil Filter (Z122E, Z125E) 55
Replacing Fuel Filter (Z122E, Z125E) 55
Checking Muffler and Spark Arrester (if equipped) 55
Replacing Spark Plug 55
Checking Engine Valve Clearance (Z122E, Z125E) 55
EVERY 2 YEARS 56
Replacing Hydraulic Hose 56
Replacing Fuel Lines 56
Replacing Engine Breather Hose 56
Replacing Carbon Canister Air Filter 56
SERVICE AS REQUIRED 56
Replacing Fuses 56
Checking and Replacing Blade 57
Mower Belt Replacement 58

ADJUSTMENT 59
MOTION CONTROL LEVER 59
HST NEUTRAL 59
MAXIMUM SPEED (FORWARD) 60
MOTION CONTROL LEVER ALIGNMENT 60
MOWER DECK LEVEL 61
ANTI-SCALP ROLLERS 61
LEVEL MOWER DECK (Side-to-Side) 62
LEVEL MOWER DECK (Front-to-Rear) 63
GENERAL TORQUE SPECIFICATION 64
TIGHTENING TORQUE CHART 65

STORAGE 66

TROUBLESHOOTING 67
ENGINE TROUBLESHOOTING 67
BATTERY TROUBLESHOOTING 69
MACHINE TROUBLESHOOTING 69
MOWER TROUBLESHOOTING 70

INDEX 72

https://truckmanualshub.com/

https://truckmanualshub.com/

SAFE OPERATION

Careful operation is your best insurance against an accident. Read and understand this manual carefully before operating the machine. All operators, no matter how much experience they may have had, should read this and other related manuals before operating the machine or any implement attached to it. It is the owner's obligation to instruct all operators in safe operation.
This mowing machine is capable of amputating hands and feet and throwing objects. Failure to observe the following safety instructions could result in serious injury or death.

1. BEFORE OPERATING

1. The ZERO TURN MOWING MACHINE has different steering characteristics than other machines with a steering wheel and does not have a service brake pedal (but, has a parking brake lever. Normal slowing down and stopping is done with the motion control levers.). Read and understand the operators manual before operating the machine. Practice operating machine at low engine speed without mower engaged in an unobstructed area.
2. Know your equipment and its limitations. Read all instructions in this manual and machine safety labels before attempting to start and operate the machine.
3. Pay special attention to the safety labels on the machine itself.
4. KUBOTA recommends the use of a Roll Over Protective Structures (ROPS) and seat belt in almost all applications. This combination will reduce the risk of serious injury or death, should the machine be upset.
   If the ROPS is loosened or removed for any reason, make sure that all parts are reinstalled correctly before operating the machine.
   Never modify or repair a ROPS because welding, bending, drilling, grinding, or cutting may weaken the structure.
   If any structural member of the ROPS is damaged, replace the entire structure at your local KUBOTA Dealer.

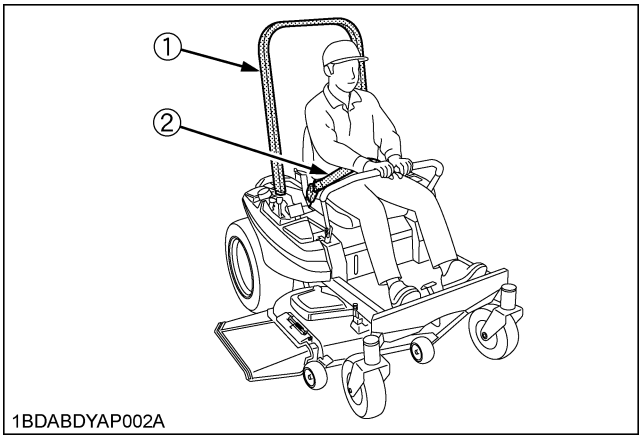

(1) ROPS
(2) Seat belt

5. Always use the seat belt if the machine has the ROPS. Check the seat belt regularly and replace if frayed or damaged.
6. Do not allow any bystanders around or near machine during operation.
7. Do not allow passengers, children or non-qualified operators on the machine at any time. The operator must remain in the machine seat throughout operation.
8. Do not operate the machine or any attachments while under the influence of alcohol, medication, controlled substances or when fatigued.
9. Do not wear loose, torn, or bulky clothing around machine. The clothing may catch on moving parts or controls, leading to the risk of accident. Wear and use any additional safety items such as hard hat, safety boots or shoes, eye and hearing protection, gloves, etc. as appropriate or required.
10. Do not wear radio or music headphones while operating the machine.
    Safe operation requires your full attention.
11. Carefully check the vicinity before operating machine or any implement attached to it. Clear the work area of objects (wires, rocks, etc.) that might be picked up and thrown. Check for overhead clearance which may interfere with a grass catcher or ROPS.
12. Check brakes and other mechanical parts for correct adjustment and wear. Replace worn or damaged parts promptly. Check the tightness of all nuts and bolts regularly. (For further details, see "PERIODIC SERVICE" and "ADJUSTMENT" section.)
13. Keep all shields and guards in place. Replace any that are damaged or missing.
14. Before allowing other people to use your machine, explain how to operate and have them read this manual before operation.

https://truckmanualshub.com/

15. In addition to the design and configuration of equipment, hazard control and accident prevention are dependent upon the awareness, concern and prudence of personnel involved in the operation, transport and maintenance of the equipment.
16. Keep the machine and attachments in good operating condition and keep safety devices in place and in proper working condition.
17. Do not modify the machine. Unauthorized modification may affect the function of the machine, which may result in personal injury.
18. Use only implements approved by KUBOTA. Use proper ballast to front or rear of machine to reduce the risk of upsets. Follow the "Safe Operation" procedures, specified in the manuals with equipment.
19. Keep your machine clean. Accumulations of dirt, grease, and trash can contribute to fires and lead to personal injury.
20. The exhaust gas from the muffler is very hot. To prevent fire, do not expose dry grass, mowed grass, oil and any other combustible materials to exhaust gas. Use a spark arrester where required. Also keep the engine and muffler clean all the time.

2. OPERATING

◆ Starting

1. Always sit in the operator's seat when starting engine or operating levers or controls.
2. Before starting the engine make sure that the motion control levers are in neutral lock, the parking brake is applied, and Power Take Off (PTO) is disengaged (OFF).
3. Do not start engine by shorting across starter terminals. The machine may start in gear and move if normal starting circuitry is bypassed.
4. Do not operate or idle engine in a non-ventilated area. Carbon monoxide gas is colorless, odorless, and deadly.
5. Do not start engine while tilting deck.
6. Check before each use that operator presence controls are functioning correctly. Test safety systems. (See "Checking Engine Start System" and "Checking OPC System" in "EVERY 50 HOURS" in "PERIODIC SERVICE" section.)
   Do not operate unless they are functioning correctly.

◆ Working

1. Do not turn sharply when driving at high speed.
2. To avoid tip over, slow down when turning on uneven terrain or before stopping.
3. Do not operate near ditches, holes, embankments, or other terrain, which may collapse under the machine weight. The risk of machine tip over increases when the ground is loose or wet.
4. Park the machine on a firm and level surface.
5. Watch where you are going at all times. Watch for and avoid obstacles. Be alert at curbs, near trees, and other obstructions and hidden hazards.
6. Know what is behind you before backing up. Look to the rear before and when backing. Do not mow while in reverse unless absolutely necessary and make sure the area immediately behind you is clear of obstructions or holes and small children. Use extra caution when machine is equipped with Grass Catcher. Your view to the rear is restricted.
7. When working in groups, always let others know what you are doing ahead of time.
8. Do not drive machine on streets or highways. Watch for traffic when you cross roads or operate near roads.
9. Be aware of the mower discharge direction and do not point it at anyone.
10. When using any attachments, never direct discharge material toward bystanders. Do not allow anyone near the attachments while in operation.
    Do not mow when bystanders are present in the mowing area.
11. To reduce fire hazards, keep the engine exhaust area free of grass or leaves.
12. Be sure rotating blades and engine are stopped and the key is removed before placing hands or feet near blades and cleaning blockages or unclogging chute.
13. Shut the engine off and wait for all movement to stop before removing grass catcher or unclogging chute.
14. Maintain all screens to avoid overheating conditions.
15. Always inspect the mower for damage after striking a foreign object. Repair or replace any damaged parts before restarting.
16. Operate during daylight or in bright artificial light.

◆ Children

Tragic accidents can occur if the operator is not alert to the presence of children. Children are attracted to the machine and mowing activity.

Never assume that children will remain where you last saw them.

1. Keep children out of the mowing area and under the watchful care of another responsible adult.
2. Be alert and turn machine off if children enter the area.
3. Before and when backing, look behind and down for small children.
4. Never carry children. There is no safe place for them to ride. They may fall off and be seriously injured or interfere with safe machine operation.
5. Never allow children to operate the machine, even under adult supervision.
6. Use extra care when approaching blind corners, shrubs, trees, or other obstructions that might hide children from sight.
7. Do not mow in reverse unless it is absolutely necessary and make sure area to the rear is clear of children before doing so.

https://truckmanualshub.com/

◆ **Operators, age 60 years and above**

Data indicates that operators, age 60 years and above, are involved in a large percentage of machine-related injuries. These operators should evaluate their ability to operate the machine safely enough to protect themselves and others from serious injury.

◆ **Operation on slopes**

Slopes are a major factor related to loss-of-control and tip-over accidents, which can result in severe injury or death. All slopes require extra caution.

If you cannot back up the slope or if you feel uneasy on it, do not mow it.

If the engine stops when operating on a slope apply the parking brake immediately to prevent machine run away.

DO

1. To avoid tip over, operate across the slopes not up and down. Stay off hills and slopes too steep for safe operation.
2. Remove obstacles such as rocks, tree limbs, etc.
3. Stay alert for holes in the terrain and other hidden hazards. Keep away from drop-offs. Uneven terrain could overturn the machine. Tall grass can hide obstacles.
4. Follow the manufacturer's recommendations for wheel weight or counterweights to improve stability.
5. Keep all movement on the slopes slow and gradual. Do not make sudden changes in speed or direction.
6. Avoid starting or stopping on a slope. If tires lose traction, disengage PTO and proceed slowly straight down the slope.
7. Reduce speed and exercise extreme caution on slopes and in sharp turns to prevent tip-over or loss of control.
8. Use special caution when changing direction on slopes. Slow down, and use extra caution when changing direction on a slope.

DO NOT

1. Do not turn on slopes unless necessary. If necessary, turn uphill slowly and gradually.
2. Do not mow near drop-offs, ditches, or embankments. The mower could suddenly turn over if a wheel is over the edge of cliff or ditch, or if an edge caves in.
3. Do not mow on wet grass. Reduced traction could cause sliding and loss of control.
4. Do not try to stabilize the machine by putting your foot on the ground.
5. Do not use grass catcher on steep slopes.
6. Do not start or stop suddenly when going uphill or downhill. Avoid sudden start and stops on slopes.
7. Never "freewheel". Do not let the machine travel downhill with motion control levers at neutral lock position or in neutral.
8. Do not operate machine without the mower deck installed.

◆ **Stopping**

1. Park the machine on level ground.
2. Make sure that the machine and all attachments have come to a complete stop before dismounting.
3. Before dismounting, apply parking brake, place the motion control levers in their neutral lock positions, disengage the PTO, lower all attachments to the ground, turn off the engine, and remove the key.
4. Do not park the machine on dry grass or leaves.

3. TRANSPORTING

1. Disengage power to attachment(s) when transporting or not in use.
2. Do not tow this machine. Use a suitable truck or trailer when transporting on public roads.
3. Use extra care when loading or unloading the machine into a trailer or truck.
4. This machine is not allowed to be used on public roads.

4. SERVICING AND STORAGE

◆ **Servicing**

1. Before servicing, park the machine on a firm, level surface and apply the parking brake. Remove the key to prevent accidental start-up.
2. Allow the machine time to cool before touching the engine, muffler, etc.
3. Always stop the engine before refueling. Avoid spills and overfilling. Wipe up spilled fuel immediately.

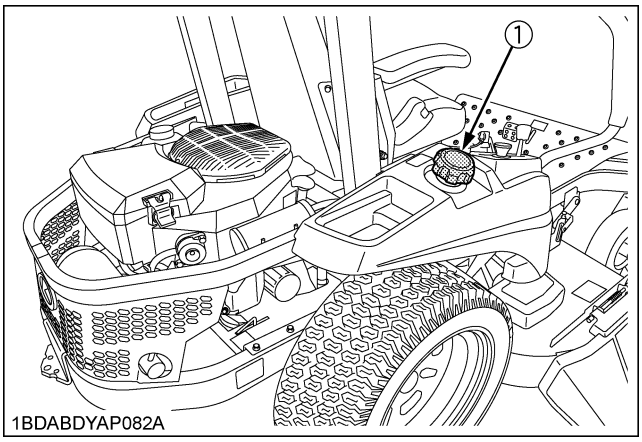

(*1) Fuel tank cap*

4. Use extra care in handling gasoline fuels. They are flammable.
   (1) Use only an approved container.
   (2) Do not remove fuel cap or refuel with the engine running. Allow engine to cool before refueling. Do not smoke while refueling or when standing near fuel.
   (3) Do not refuel the machine indoors and always clean up spilled fuel or oil.

https://truckmanualshub.com/

(4) Do not store the machine or fuel container inside where there is an open flame, such as in a water heater.

5. Do not smoke when working around battery or when refueling. Keep all sparks and flames away from battery and fuel tank.
   A battery, especially when charging, will give off hydrogen and oxygen gases, which can explode and cause serious personal injury.
6. Before "jump starting" a dead battery, read and follow all the instructions.
7. Disconnect the battery's ground cable before working on or near electric components.
8. Do not use or charge the refillable type battery if the fluid level is below the LOWER (lower limit level) mark. Otherwise, the battery component parts may prematurely deteriorate, which may shorten the battery's service life or cause an explosion. Check the fluid level regularly and add distilled water as required so that the fluid level is between the UPPER and LOWER levels.
9. Keep first aid kit and fire extinguisher handy at all times.
10. Do not attempt to mount a tire on a rim unless qualified to do so and all proper safety precautions are followed.
11. Always maintain the correct tire inflation pressure. Do not inflate tires above the recommended pressure shown in the Operator's Manual.

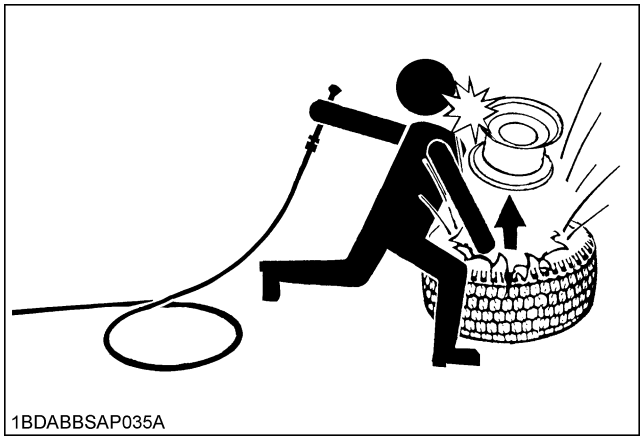
1BDABBSAP035A

12. Provide adequate support when changing wheels.
13. Make sure that wheel nuts and bolts have been tightened to the specified torque.
14. Do not make adjustments or repairs with the engine running.
15. Keep machine free of grass, leaves, or other debris build-up.
16. Do not change the engine governor setting or overspeed the engine.
17. Do not run a machine inside a closed area.
18. Mower blades are sharp and can cut your hands. Wrap the blade(s) or wear gloves, and use extra caution when servicing them.
19. Keep nuts and bolts, especially blade attachment bolts, tight and keep equipment in good condition.
20. Never tamper with safety devices. Check their operation for proper function regularly.
21. Waste products such as used oil, fuel, coolant, brake fluid, and batteries, can harm the environment, people, pets and wildlife. Please dispose of properly.
22. Do not use beverage containers for waste fluids or other products. Someone, particularly children, may drink them by mistake.
23. Securely support machine or any machine elements with stands or suitable blocking before working underneath. For your safety do not rely on hydraulically supported devices, they may leak down, suddenly drop or be accidently lowered.
24. See your local Recycling Center or KUBOTA Dealer to learn how to recycle or get rid of waste products.
    - A Material Safety Data Sheet (MSDS) provides specific details on chemical products; physical and health hazards, safety procedures, and emergency response techniques. The seller of the chemical products used with your machine is responsible for providing the MSDS for that product upon request.

◆ **Storage**

1. Keep the machine and supply of fuel in locked storage and remove the ignition key to prevent children or others from playing or tampering with them.
2. To avoid sparks from an accidental short circuit, always disconnect the battery's ground cable (-) first and reconnect it last.

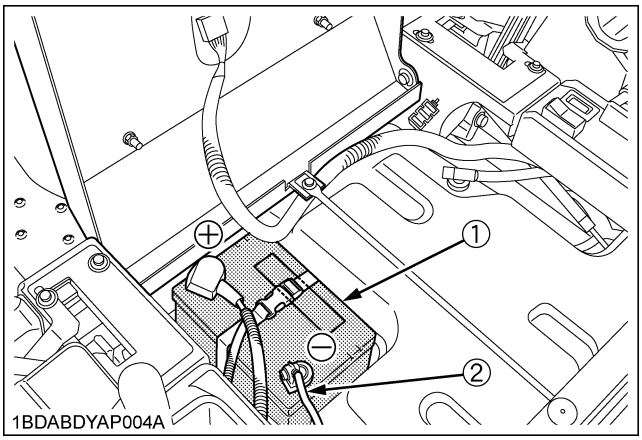

1BDABDYAP004A

(1) Battery *(+): Positive terminal*
(2) Ground cable *(-): Negative terminal*

3. To avoid the danger of exhaust fume poisoning, do not operate the engine in a closed building without adequate ventilation.
4. To reduce fire hazards, clean the machine thoroughly before storage. Dry grass and leaves around the engine and muffler may ignite.

https://truckmanualshub.com/

5. DANGER, WARNING AND CAUTION LABELS

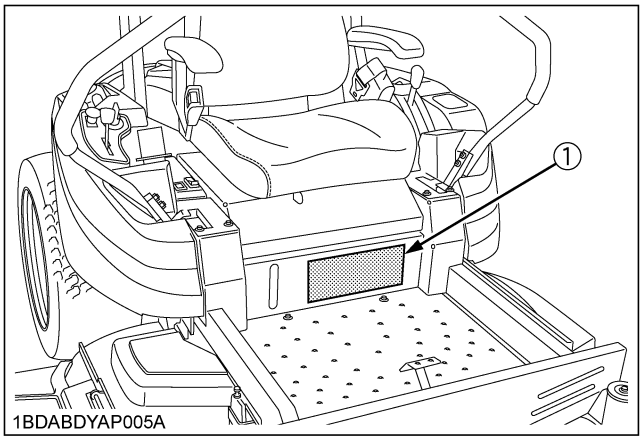

(1) Part No. K3011-6552-2

1BDABDYAP092A
1BDABDYAP093A

https://truckmanualshub.com/

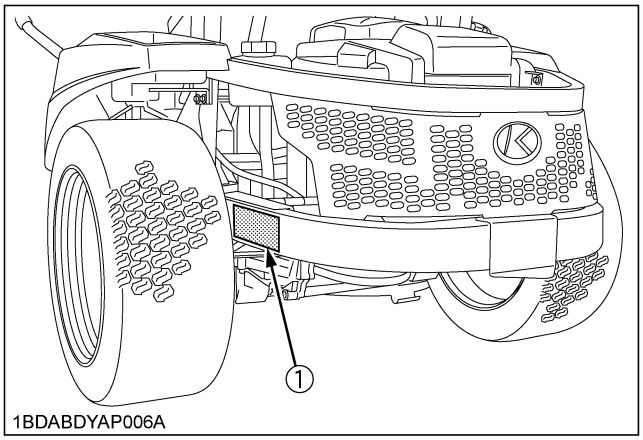

1BDABDYAP006A

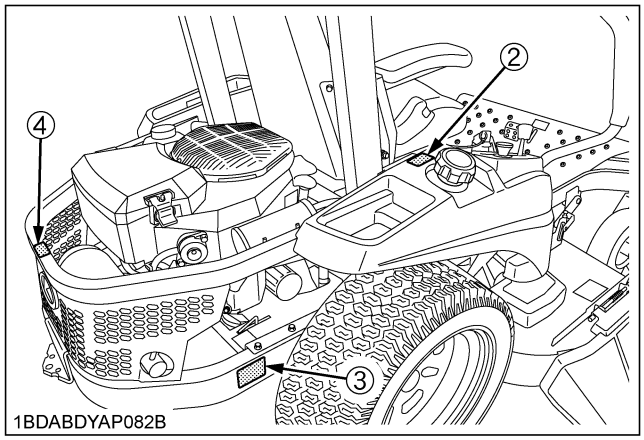

1BDABDYAP082B

(1) Part No. K3011-6541-1

1BDABDYAP059A

(2) Part No. K3011-6584-1

- Gasoline fuel only
- No fire

1BDABDYAP053A

(3) Part No. K3011-6543-1

1BDABDYAP060A

1BDABDYAP090A

(4) Part No. K3011-6548-2

- Hot surface - Burn to finger or hand
- Do not touch muffler.

1BDABDYAP061A

https://truckmanualshub.com/

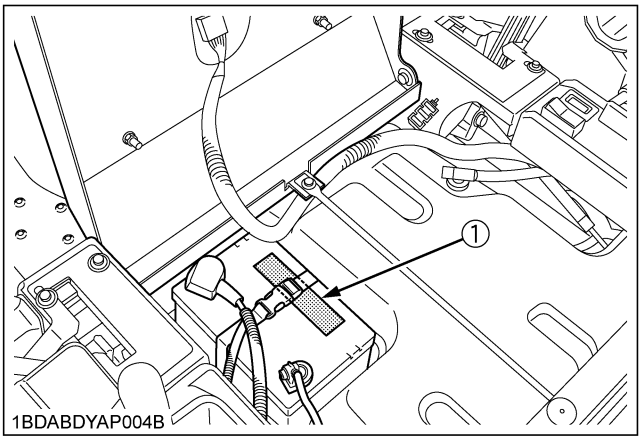

(1) Part No. K3011-6118-1

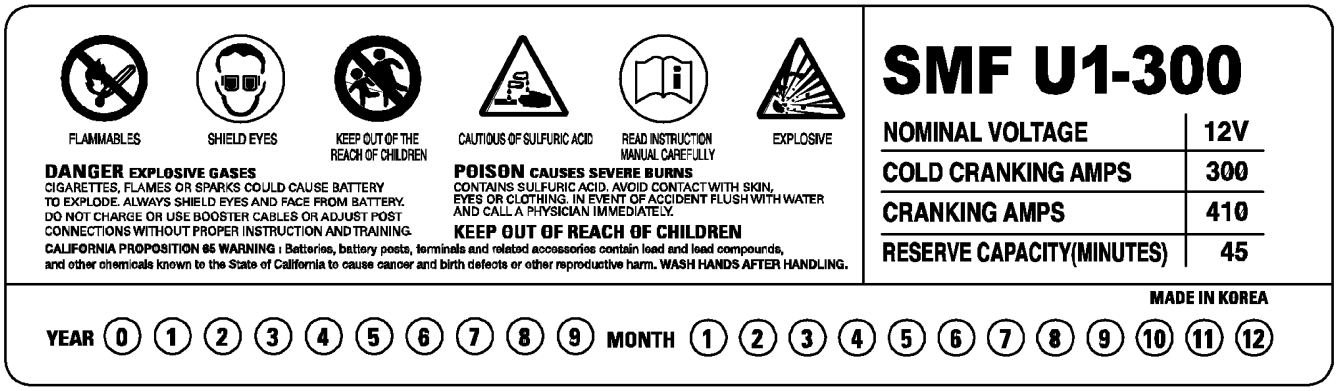

1BDABDYAP062A

DANGER - EXPLOSIVE GASES -
- CIGARETTES, FLAMES OR SPARKS COULD CAUSE BATTERY TO EXPLODE.
- ALWAYS SHIELD EYES AND FACE FROM BATTERY.
- DO NOT CHARGE OR USE BOOSTER CABLES OR ADJUST POST CONNECTIONS WITHOUT PROPER INSTRUCTION AND TRAINING.

POISON - CAUSES SEVERE BURNS -
- CONTAINS SULFURIC ACID, AVOID CONTACT WITH SKIN, EYES OR CLOTHING.
- IN EVENT OF ACCIDENT FLUSH WITH WATER AND CALL A PHYSICIAN IMMEDIATELY.

WASH HANDS AFTER HANDLING
KEEP OUT OF REACH OF CHILDREN

1BDABDYAP073A

https://truckmanualshub.com/

[RCK48P, RCK54P]

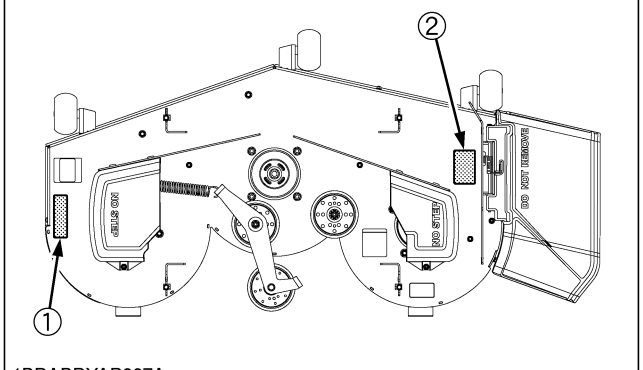

1BDABDYAP007A

(1) Part No. K5617-7311-1

1BDABBSAP0030

(2) Part No. K5617-7312-1

1BDABBSAP0020

1BDABDYAP066A

6. CARE OF DANGER, WARNING, AND CAUTION LABELS

1. Keep danger, warning and caution labels clean and free from obstructing material.
2. Clean danger, warning and caution labels with soap and water, and dry with a soft cloth.
3. Replace damaged or missing danger, warning and caution labels with new labels from your local KUBOTA Dealer.
4. If a component with danger, warning and caution label(s) affixed is replaced with new part, make sure new label(s) is (are) attached in the same location(s) as the replaced component.
5. Mount new danger, warning and caution labels by applying on a clean dry surface and pressing any bubbles to outside edge.

https://truckmanualshub.com/

SERVICING OF MACHINE

After reading this manual thoroughly, you will find that you can do some of the regular maintenance yourself. Your dealer is interested in helping you get the best performance from your new machine and wants to help you get the most value from it. When in need of parts or major service, be sure to see your KUBOTA Dealer. When in need of parts, be prepared to give your dealer the serial number of the machine, ROPS, engine and mower.

Locate the serial numbers now and record them in the space provided.

	Type	Serial No.
Machine		
ROPS		
Engine		
Mower		
Date of Purchase		
Name of Dealer		
(To be filled in by purchaser)		

◆ **Warranty**

This machine is warranted under the Kubota Limited Express warranty, a copy of which may be obtained from your selling dealer. No warranty shall, however, apply if the machine has not been handled according to the instruction given in the Operator's Manual even it is within the warranty period.

◆ **Scrapping the machine and its procedure**

To put the machine out of service, correctly follow the local rules and regulations of the country or territory where you scrap it. If you have questions, consult your local KUBOTA Dealer.

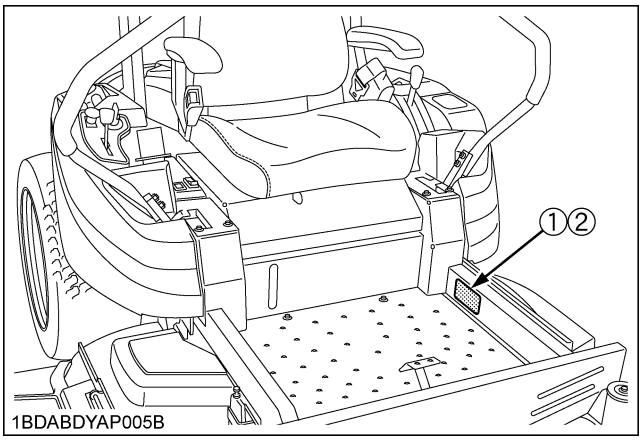

(1) Machine identification plate
(2) Machine serial No.

[Z122E]

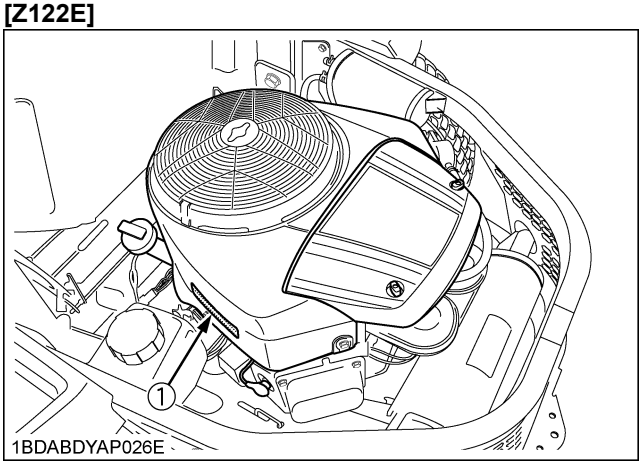

(1) Engine serial No.

[Z125E]

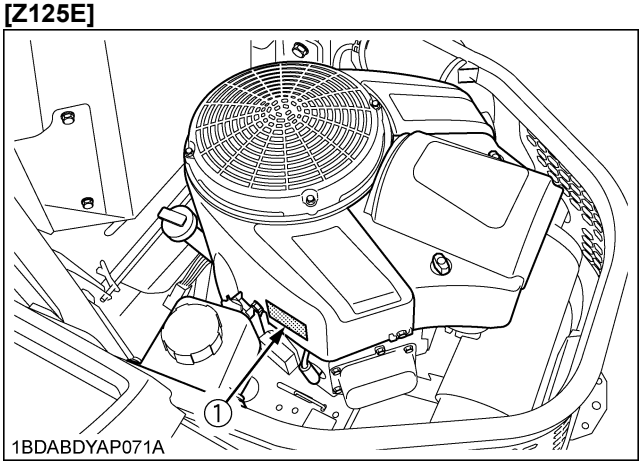

(1) Engine serial No.

https://truckmanualshub.com/

[Z121S, Z125S]

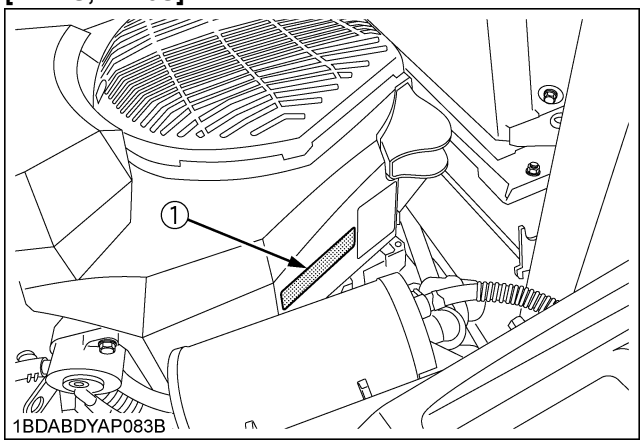

(1) Engine serial No.

[RCK48P, RCK54P]

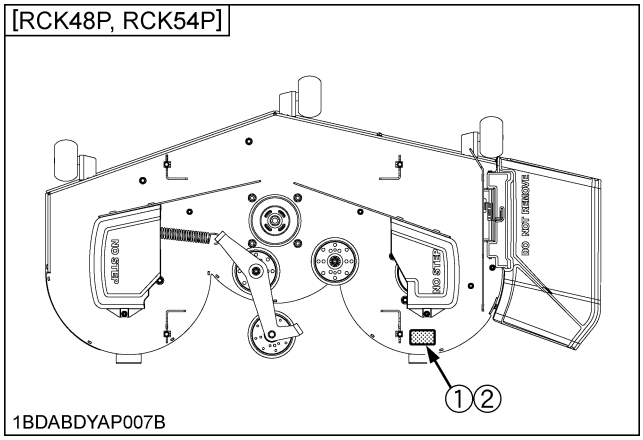

(1) Mower identification plate
(2) Mower serial No.

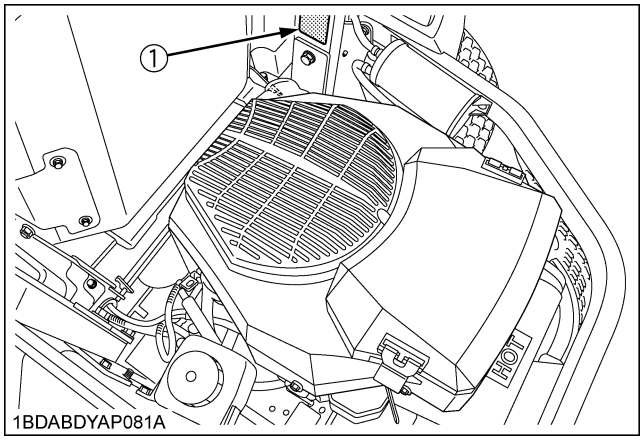

(1) ROPS serial No.

https://truckmanualshub.com/

SPECIFICATIONS

Model				Z122E	Z121S	Z125E	Z125S
Engine	Model			GH731V-1	GH736V	GH733V-1	GH750V
	Max. engine power (Gross)		kW (HP)	16.4 (22) *1*2	15.7 (21) *1*3	18.6 (25) *1*2	18.6 (25) *1*3
	Type			Air-cooled gasoline engine			
	Number of cylinders			2 (V-Twin)			
	Bore and stroke		mm (in.)	79 x 73 (3.11 x 2.87)	83 x 67 (3.27 x 2.64)	79 x 73 (3.11 x 2.87)	83 x 69 (3.27 x 2.72)
	Total displacement		cm^3 (cu. in.)	724 (44)	725 (44)	724 (44)	747 (46)
	Rated revolution		rpm	3600			
	Fuel			Unleaded gasoline			
	Starter			Electric			
	Lubrication			Full pressure lubrication			
	Cooling			Air cooled			
	Battery			U1 (12 V, RC: 45 min, CCA: 300, CA: 410)			
Capacities	Fuel tank		L (U.S.gals.)	16 (4.2)			
	Engine crankcase (with filter)		L (U.S.qts.)	1.8 (1.9)			
	Transmission case including Rear axle gear case		L (U.S.qts.)	4.8 (5.1) (*4)			
Dimensions	Overall length		mm (in.)	1940 (76.4)			
	Overall width w/o mower deck		mm (in.)	1207 (47.5)			
	Overall height	With ROPS	mm (in.)	1652 (65.0)			
	Wheelbase		mm (in.)	1155 (45.5)			
	Min. ground clearance		mm (in.)	123 (4.84) W/48"		123 (4.84) W/54"	
	Tread	Front	mm (in.)	796 (31.3)			
		Rear	mm (in.)	954 (37.6)			
Weight (W/MOWER DECK)			kg (lbs.)	330 (728) with 48"	340 (750) with 48"	340 (750) with 54"	350 (772) with 54"
Traveling system	Tires	Front		11 x 4 - 5 (4PR) Smooth			
		Rear		22 x 10 - 14 (4PR) Turf			
	Traveling speeds	Forward	mph (km/h)	0 to 8.0 (0 to 12.9)			
		Reverse	mph (km/h)	0 to 4.0 (0 to 6.4)			
	Steering			2 - Hand levers			
	Transmission			2 - HST w / Gear			
	Parking brake			Hand lever applied, released			
	Min. turning radius		mm (in.)	0 (0)			

https://truckmanualshub.com/

Model		Z122E	Z121S	Z125E	Z125S
PTO	Drive system	Belt			
	Clutch type	Electric			

(Specifications and design subject to change without notice)

NOTE:

*1: Manufacturer's estimate

*2: The gross power rating for individual gas engine models is labeled in accordance with SAE (Society of Automotive Engineers) code J1940 (Small Engine Power & Torque Rating Procedure), and rating performance has been obtained and corrected in accordance with SAE J1995 (Revision 2002-05). Torque values are derived at 3060 RPM; horsepower values are derived at 3600 RPM. Actual gross engine power will be lower and is affected by, among other things, ambient operating conditions and engine-to-engine variability. Given both the wide array of products on which engines are placed and the variety of environmental issues applicable to operating the equipment, the gas engine will not develop the rated gross power when used in a given piece of power equipment (actual "on-site" or net power). This difference is due to a variety of factors including, but not limited to, accessories (air cleaner, exhaust, charging, cooling, carburetor, fuel pump, etc.), application limitations, ambient operating conditions (temperature, humidity, altitude), and engine-to-engine variability. Due to manufacturing and capacity limitations, Briggs & Stratton may substitute an engine of higher rated power for this Series engine.

*3: Horsepower ratings exceed Society of Automotive Engineers Small Engine Test Code J1940. Actual engine horsepower is lower and affected by, but not limited to, accessories (air cleaner, exhaust, charging, cooling, fuel pump, etc.), application, engine speed and ambient operating conditions (temperature, humidity, and altitude). Kohler reserves the right to change product specifications, design, and standard equipment without notice and without incurring obligation.

*4: Oil amount when the oil level is at the upper level.

Model				RCK48P-124Z	RCK54P-127ZA
PRO Commercial Deck (Fabricated deck)	Suitable machine			Z122E, Z121S	Z125E, Z125S
	Mounting method			Parallel linkage	
	Adjustment of cutting height			Dial gauge	
	Cutting width		mm (in.)	1225 (48)	1375 (54)
	Cutting height		mm (in.)	38 to 114 (1.5 to 4.5)	
	Weight (Approx.)		kg (lbs.)	60 (132)	68 (150)
	Blade spindle speed		r/s (rpm)	69.1 (4140) *1	61.7 (3700) *1
	Blade tip velocity		m/s (fpm)	92.0 (18100) *1	92.0 (18100) *1
	Blade length		mm (in.)	424 (16.7)	475 (18.7)
	Number of blades			3	
	Dimensions	Total length	mm (in.)	880 (34.6)	925 (36.4)
		Total width	mm (in.)	1552 (61.1)	1710 (67.3)
		Total height	mm (in.)	340 (13.3)	

*1: Engine Max rpm

https://truckmanualshub.com/

IMPLEMENT LIMITATIONS

The KUBOTA Machine has been thoroughly tested for proper performance with implements sold or approved by KUBOTA. Use with implements which are not sold or approved by KUBOTA and which exceed the maximum specifications listed below, or which are otherwise unfit for use with the KUBOTA Machine may result in malfunctions or failures of the machine, damage to other property and injury to the operator or others. [Any malfunctions or failures of the machine resulting from use with improper implements are not covered by the warranty.]

	Maximum loading weight		Maximum total weight	Tongue weight W_1	Towing capacity W_2
	Front axle **W**f	Rear axle **W**r			
Z122E, Z121S, Z125E, Z125S	98 kg (217 lbs.)	380 kg (837 lbs.)	478 kg (1054 lbs.)	34 kg (75 lbs.)	113 kg (250 lbs.)

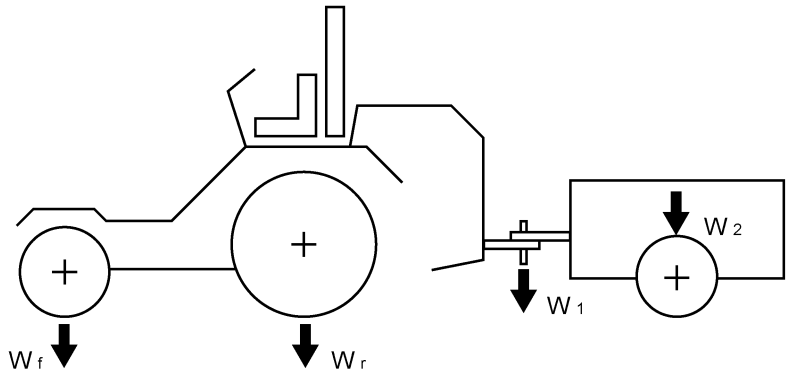

1BDABDYAP072A

NOTE :
- Do not operate with trailer on incline greater than 10°.

https://truckmanualshub.com/

INSTRUMENT PANEL AND CONTROLS

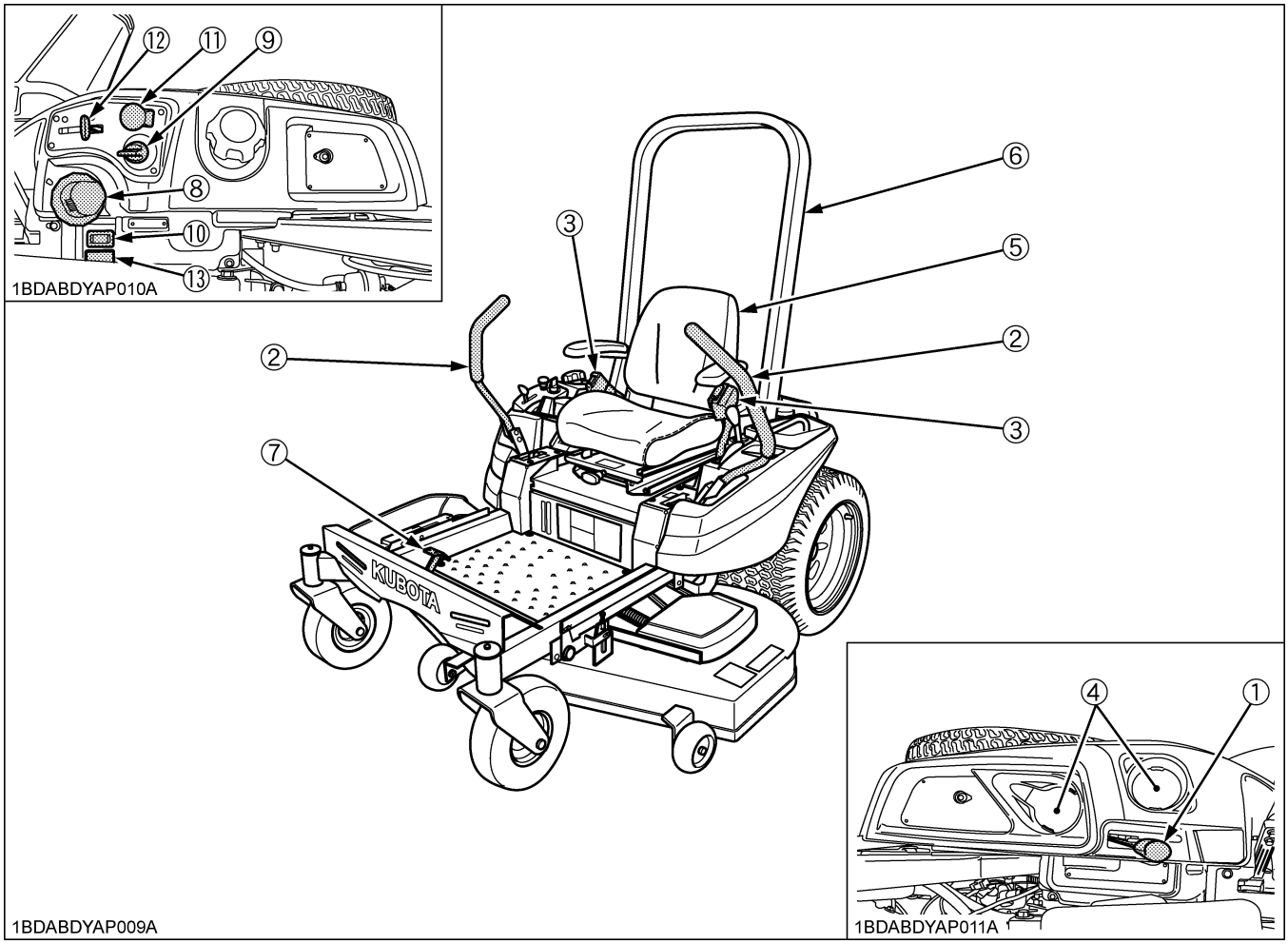

ILLUSTRATED CONTENTS

(1)	*Parking brake lever*	*9, 17*
(2)	*Motion control lever*	*9, 18*
(3)	*Seat belt*	*16*
(4)	*Cup holder*	*-*
(5)	*Operator's seat*	*16*
(6)	*ROPS*	*-*
(7)	*Mower lift pedal*	*17*

ILLUSTRATED CONTENTS

(8)	*Cutting height control dial*	*22*
(9)	*Key switch*	*11*
(10)	*Hour meter*	*12*
(11)	*PTO switch*	*23*
(12)	*Throttle lever*	*17*
(13)	*Light switch (Z121S, Z125S)*	*16*

https://truckmanualshub.com/

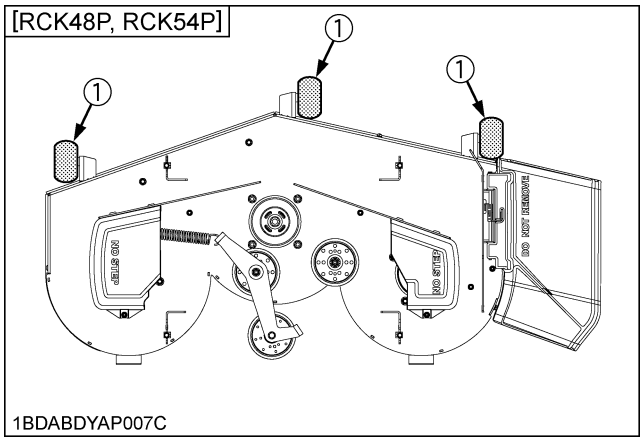

ILLUSTRATED CONTENTS

(1) Anti-scalp roller (Front, bolt shift type)..... 22

https://truckmanualshub.com/

MOWER MOUNTING

MOUNTING THE MOWER DECK

WARNING

To avoid serious injury:

- **Park the machine on a firm and level surface.**
- **Apply the parking brake.**
- **Stop the engine and remove the key.**

1. Before mounting the mower deck, raise the lift links to the full up position.
2. Adjust the cutting height control dial to 1.5 in. position.
3. Change the direction of the front tires as shown in the figure.
4. Place the mower deck at the right side of the machine.

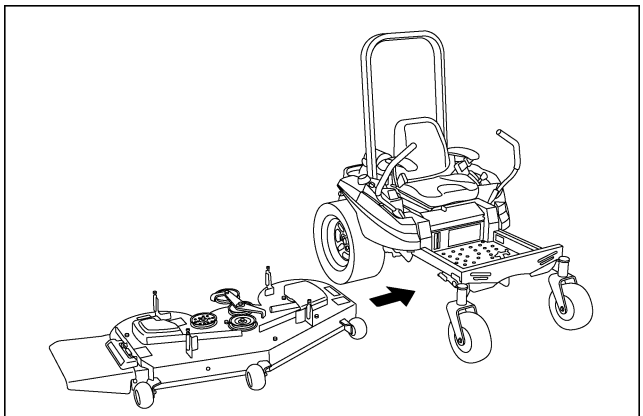
1BDABDYAP012A

5. Slide the mower deck under the machine, then lower mower lift links.
6. Attach the lift links to the mower deck with attaching hardware.

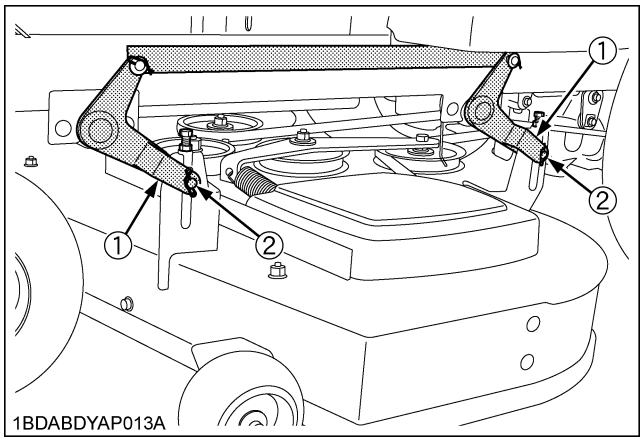

1BDABDYAP013A

(1) Lift link
(2) Clevis pin, snap pin

7. Attach the PTO belt to the engine pulley. Refer the belt routing.

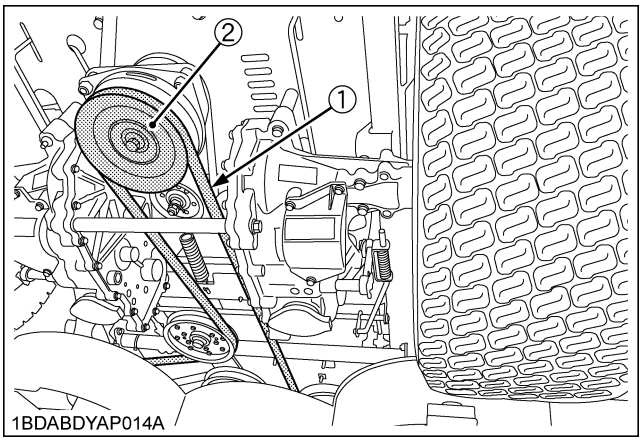

1BDABDYAP014A

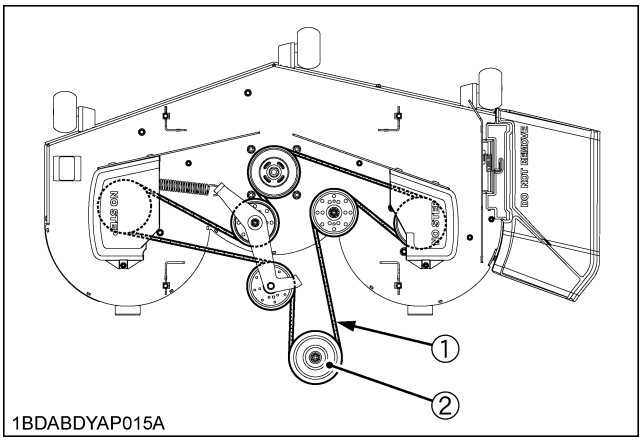

1BDABDYAP015A

(1) PTO belt
(2) Engine pulley

8. After mounting the mower, check the mower level. If necessary, adjust the mower level and anti-scalp rollers.

ADJUSTING THE MOWER

See "OPERATING THE MOWER" section.

DISMOUNTING THE MOWER DECK

For dismounting the mower deck, reverse the above procedures.

https://truckmanualshub.com/

OPERATING THE ENGINE

WARNING

To avoid serious injury:

- **Read and understand "SAFE OPERATION" in the front of this manual.**
- **Read and understand the danger, warning and caution labels located on the machine.**
- **To avoid danger of exhaust fume poisoning, do not operate the engine in a closed building without proper ventilation.**
- **Never start the engine while standing on the ground. Start the engine only from operator's seat.**

MOUNT AND DISMOUNT MACHINE SAFELY

DO NOT step on either side of the mower deck when mounting and dismounting the machine. When mounting the machine from either side, step over the mower deck.

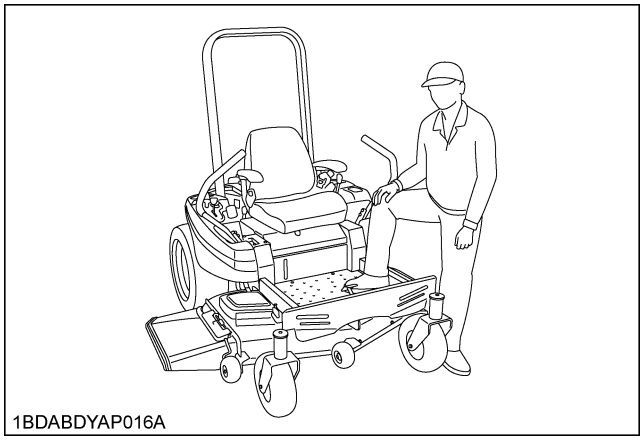

STARTING THE ENGINE

1. **Sit on the operator's seat.**
2. **Apply the parking brake.**

To apply the parking brake:
Place the parking brake lever in the "ENGAGED" position.

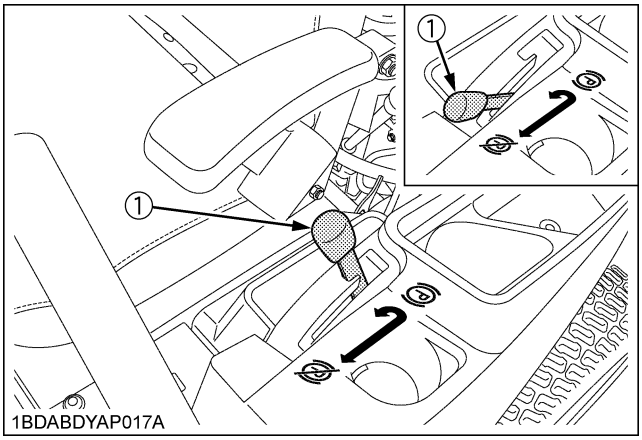

(1) Parking brake lever *(P) "ENGAGED"* *(R) "DISENGAGED"*

To release the parking brake:
Place the parking brake lever in the "DISENGAGED" position.

https://truckmanualshub.com/

3. Make sure that the PTO switch is in the "DISENGAGED" (OFF) position.

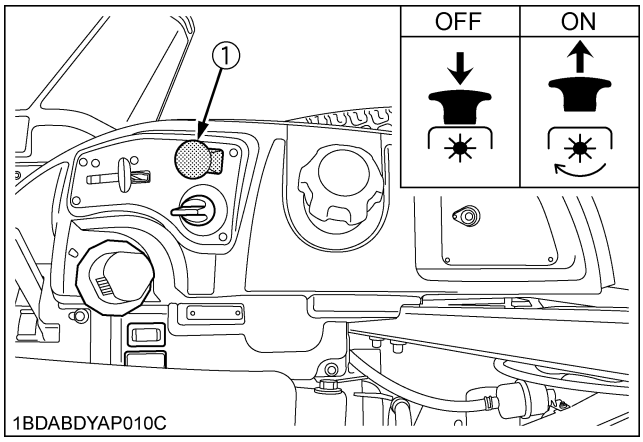

(1) PTO switch

"ENGAGED" (ON)
"DISENGAGED" (OFF)

4. Place the motion control levers in the "NEUTRAL LOCK" position.

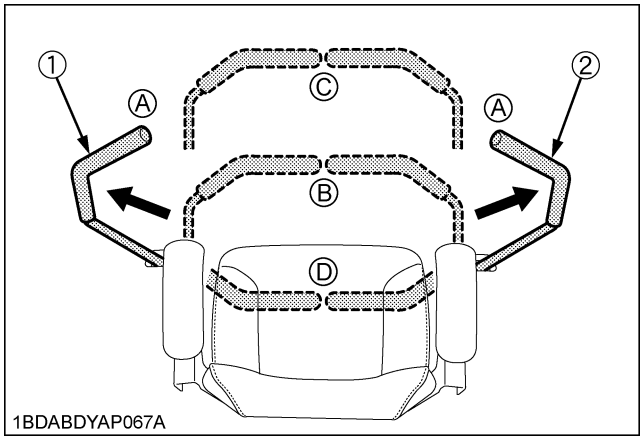

(1) Motion control lever (LH)
(2) Motion control lever (RH)

(A) "NEUTRAL LOCK" Position
(B) "NEUTRAL" Position (held by hands)
(C) "FORWARD"
(D) "REVERSE"

5. Set the throttle lever as follows.

- If the engine is cold:
  Place the throttle lever to the "CHOKE" position.
- If the engine is warm:
  Place the throttle lever **midway** between the **"SLOW"** and the **"FAST"** positions.

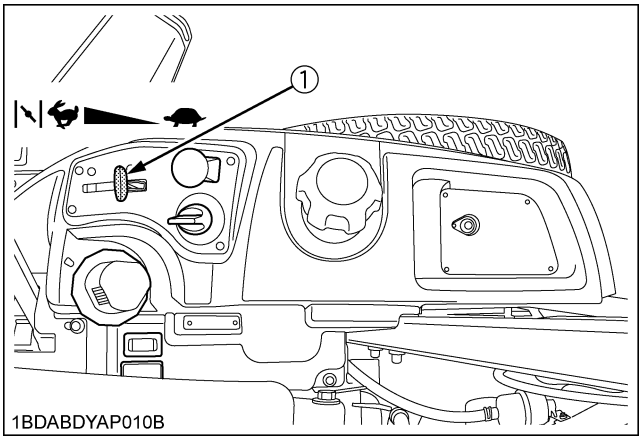

(1) Throttle lever

"FAST"
"SLOW"
"CHOKE"

https://truckmanualshub.com/

6. Insert the key into the key switch. Turn the key switch to the "START" position and release the key to the "ON" position when the engine starts.

IMPORTANT :
- Because of the start interlocks, the engine can not be started except when the PTO switch is disengaged (OFF), the parking brake lever is applied, motion control levers are in "NEUTRAL LOCK" position and the operator is sitting on the seat.

■Throttle Lever

Pulling the throttle lever backward decreases the engine speed and pushing it forward increases the engine speed. When the lever is pushed beyond the "FAST" position, the choke is engaged.

[For a Cold Engine]
Always place the throttle lever to the "CHOKE" position to start the engine in cold conditions.

Gradually return the throttle lever to the usual position after the engine starts and warms up.

The engine/equipment may be operated during the warm-up period, but it may be necessary to leave the choke partially on until the engine warms up.

[For a Warm Engine]
Always place the throttle lever to the usual position after the engine starts.

■Key Switch

	OFF.....	The position where the key can be inserted into or removed from the key switch. [When the key is turned to this position, the engine shuts off.]
	ON.....	The engine keeps running.
	START.....	Apply the parking brake and turn the key switch to this position to start the engine.

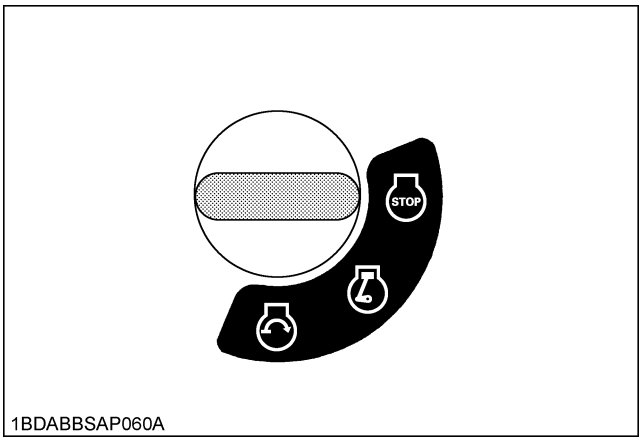

: "OFF" *: "START"*
: "ON"

IMPORTANT :
- Do not use starting fluid or ether.
- To protect the battery and the starter, make sure that the starter is not continuously turned for more than 10 seconds at a time.
  If the engine does not start, allow 60 seconds cool down period between starting attempts.
- If the starter does not turn the engine over, shut off the starter immediately. Do not make further attempts to start the engine until the condition is corrected. Do not jump start using another battery.
  Consult your local KUBOTA dealer.
- Do not turn the key switch to the "START" position while the engine is running.
- When the temperature is below 0℃ (32℉), run the engine at medium speed to warm up the lubricant of the engine and the transmission for at least 10 minutes. If the machine is operated before the lubricant is warm enough, the machine life will be shortened.
- Do not operate the machine under full load until it is sufficiently warmed up 2 or 3 minutes for temperature above 0℃ (32℉).
- When the ambient temperature is less than -15℃ (5℉), remove the battery from the machine and store it somewhere warm until the next operation.

7. Warm the engine by running at medium speed.

https://truckmanualshub.com/

CHECK DURING OPERATING

While operating, make the following checks to see that all the parts are functioning normally.

■Immediately Stop the Engine if:

- The engine suddenly slows down or accelerates.
- Unusual noises suddenly occur.
- Exhaust fumes suddenly become discolored.

■Fuel Gauge

The fuel gauge indicates the fuel level.

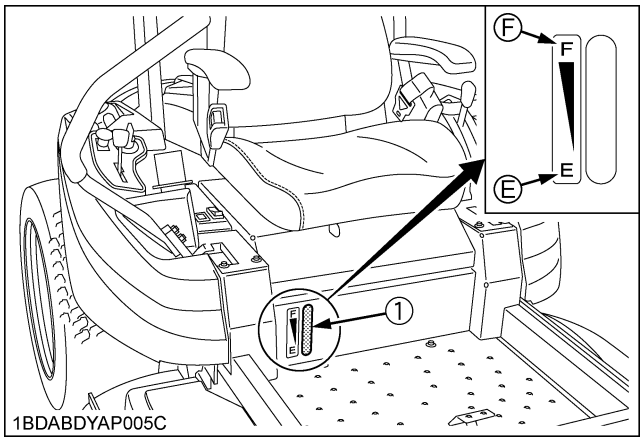

(1) Fuel gauge *(E) "EMPTY"* *(F) "FULL"*

IMPORTANT :

- Do not refuel over "F". Fill the tank only to the bottom of the filler neck in the fuel tank.
- Fill the fuel on a level ground.

■Hour Meter

This meter gives readings for the number of hours the engine has been running.

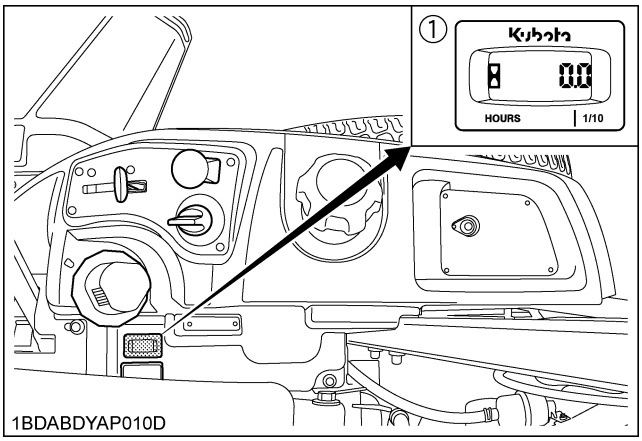

(1) Hour meter

COLD WEATHER STARTING

If the ambient temperature is below 0℃(32℉) and the engine is very cold, start it in the following manner:

1. Place the throttle lever to the "CHOKE" position.
2. Turn the key switch to the START ("⏲") position.
   - Operate the starter 5 seconds.
   - If the engine does not start, wait 10 seconds.
   - Repeat this procedure until the engine starts.
3. When the engine starts, release the key to the "ON" ("⏲") position.
4. Place the throttle lever midway between the "SLOW" and the "FAST" positions.

https://truckmanualshub.com/

WARMING UP

WARNING

To avoid serious injury:

- **Be sure to apply the parking brake during warm-up.**

For 5 minutes after engine start-up, allow the engine to warm up without applying any load. This is to allow oil to reach every part of the engine. If load should be applied to the engine without this warm-up period, problems may develop such as seizure, breakage or premature wear may develop.

■Warm-up and Transmission Oil in the Low Temperature Range

Hydraulic oil serves as transmission oil. In cold weather, the oil may be cold with increased viscosity. This can cause delayed oil circulation or abnormally low hydraulic pressure for some time after engine start-up. This in turn can create problems with the hydraulic system.
To prevent the above, observe the following instructions:
Warm up the engine at about 50% of rated rpm according to the table below:

Ambient temperature	Warm-up time requirement
Higher than 0℃ (32℉)	Approx. 5 minutes
-10 to 0℃ (14 to 32℉)	5 to 10 minutes
-20 to -10℃ (-4 to 14℉)	10 to 15 minutes
Below -20℃ (-4℉)	More than 15 minutes

IMPORTANT :

- Do not operate unless the engine is well warmed up. If operation is attempted while the engine is still cold, the hydraulic mechanism will not function properly and its service life will be shortened.
- If noises are heard after the hydraulic control lever has been activated and the implement is lifting, the hydraulic mechanism is not adjusted properly. Unless corrected, the unit will be damaged. Contact your local KUBOTA Dealer for adjustment.

JUMP STARTING

WARNING

To avoid serious injury:

- **Keep cigarettes, sparks, and flames away from battery.**
- **If the machine battery is frozen, do not jump start the engine.**
- **Do not connect the other end of negative jumper cable to the negative terminal of the machine battery.**

When jump starting the engine, follow the instructions below to start the engine safely.

1. Bring a helper vehicle with a battery of the same voltage as the disabled machine within easy cable reach. "THE VEHICLES MUST NOT TOUCH".
2. Apply the parking brakes of both vehicles and put the shift levers in neutral. Shut the engine off.
3. Put on safety goggles and rubber gloves.
4. Ensure vent caps are securely in place (if equipped).
5. Attach the red clamp to the positive (red, (+) or pos.) terminal of the dead battery and clamp the other end of the same cable to the positive (red, (+) or pos.) terminal of the helper battery.
6. Clamp the other cable to the negative (black, (-) or neg.) terminal of the helper battery.
7. Clamp the other end to the engine block or the frame of the disabled machine as far from the dead battery as possible.
8. Start the helper vehicle and let its engine run for a few moments. Start the disabled machine.
9. Disconnect the jumper cables in the exact reverse order of attachment. (Steps 7, 6 and 5)

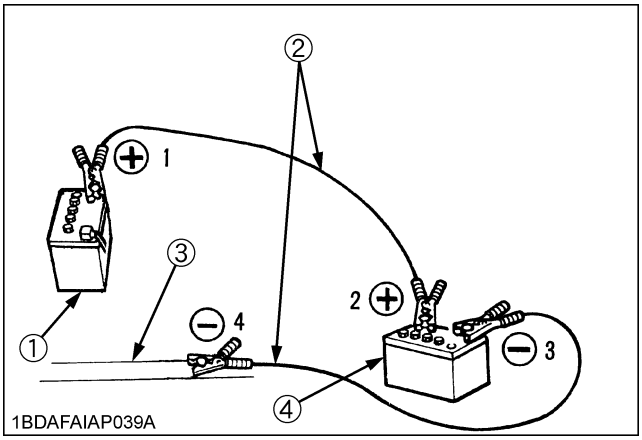

(1) Dead battery
(2) Jumper cables
(3) Engine block or frame
(4) Helper battery

Connect cables in numerical order. Disconnect in reverse order after use.

IMPORTANT :

- This machine has a 12 volt negative (-) ground starting system.
- Use only same voltage for jump starting.

https://truckmanualshub.com/

- Use of a higher voltage source on a machine could result in severe damage to the machine electrical system.
  Use only matching voltage source when "jump-starting" a low or dead battery condition.

STOPPING THE ENGINE

1. After slowing the engine to half speed, turn the key switch to the "OFF" position.
2. Remove the key.
3. Do not leave the key switch "ON" (key in the "ON" position) as the battery will discharge when the engine is not running.
4. Apply the parking brake.
5. Turn the carburetor fuel valve to "STOP" (OFF) position.

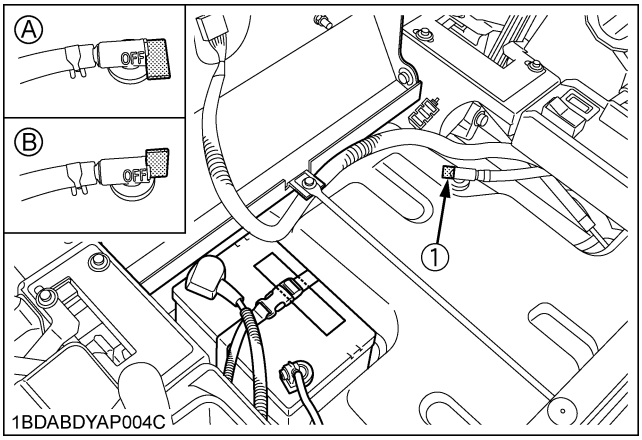

(1) Carburetor fuel valve *(A) "STOP" (OFF)* *(B) "RUN"*

IMPORTANT :

- Do not stop the engine when the machine is on an incline for a long time. The engine oil may go into the carburetor and the muffler through the valve system.
- Place the throttle control lever in the half speed position to help prevent the engine from backfiring before stopping the engine.

https://truckmanualshub.com/

OPERATING THE MACHINE

OPERATING NEW MACHINE

How a new machine is operated and maintained will determine the life of the machine.

A new machine just off the factory production line has been tested, but the various parts are not accustomed to each other, so care should be taken to operate the machine for the first 50 hours at a slower speed and avoid excessive work or operation until the various parts become "broken-in." The manner in which the machine is handled during the "breaking-in" period greatly affects the life of your machine. Therefore, to obtain the maximum performance and the longest life of the machine, it is very important to properly break-in your machine. In handling a new machine, the following precautions should be observed.

■Changing Lubricating Oil for New Machines

The lubricating oil is especially important in the case of a new machine. The various parts are not "broken-in" and are not accustomed to each other; small metal grit may develop during the operation of the machine; and this may wear out or damage the parts. Therefore, care should be taken to change the lubricating oil a little earlier than would ordinarily be required.

For further details of change interval hours.

(See "SERVICE INTERVALS" in "MAINTENANCE" section.)

■Engine Break-in

After the first 100 hours of operation, change the engine oil and filter. (See "EVERY 100 HOURS" in "PERIODIC SERVICE" section.)

■Machine Break-in

After the first 100 hours of operation, change the transaxle fluid and oil filter cartridge. (See "EVERY 100 HOURS" in "PERIODIC SERVICE" section.)

DANGER

To avoid serious injury or death:

- **Do not operate the mower without the deflector shield in the down position.**

WARNING

To avoid serious injury or death:

- **The machine relies upon the engine driven transmission for speed, direction, and motion control. If the engine is not running, the machine cannot be driven or controlled.**
  If the engine stops when operating on a slope, apply the parking brake immediately to prevent machine runaway.
- **Do not allow any person other than the driver to ride on the machine.**
- **Do not drive the machine close to the edges of ditches or banks which may collapse under the weight of the machine, especially when the ground is loose or wet.**
- **When turning the machine, be sure to reduce the travel speed and operate motion control levers carefully.**
- **To avoid tip over, operate across slopes, not up and down. Avoid sudden starts and stops on slopes. Slow down, and use extra caution when changing direction on a slope.**
  Park the machine on a firm and level surface.
- **Watch where you are going at all times. Watch for and avoid obstacles. Be alert at curbs, near trees, and other obstructions and hidden hazards.**
- **Do not mow near drop-offs, ditches or embankments. The mower could turn over if a wheel is over the edge of a cliff or ditch, or if an edge caves in.**
- **Do not drive machine on streets or highways. Watch for traffic when you cross roads or operate near roads.**
- **Look to the rear before and when backing. Make sure the area immediately behind you is clear of obstructions, holes and small children. Use extra caution when machine is equipped with Grass Catcher.**
- **Keep bystanders especially children and animals away from the mowing area.**

WARNING

To avoid serious injury:

- **Clear the work area of objects which might be picked up and thrown by blades.**
- **Do not direct the opening of the chute at bystanders or animals. Ejected objects may cause injury. Plan your mowing carefully before starting operation.**
- **Be sure to disengage the PTO and sit on the operator's seat before starting the engine.**

https://truckmanualshub.com/

STARTING

1. Adjust the operator's position and apply the seat belt.

■Operator's Seat

WARNING

To avoid serious injury:

- **Make adjustments to the seat only while the machine is stopped.**
- **Make sure that the seat is completely secured after each adjustment.**
- **Do not allow any person other than the driver to ride on the machine.**

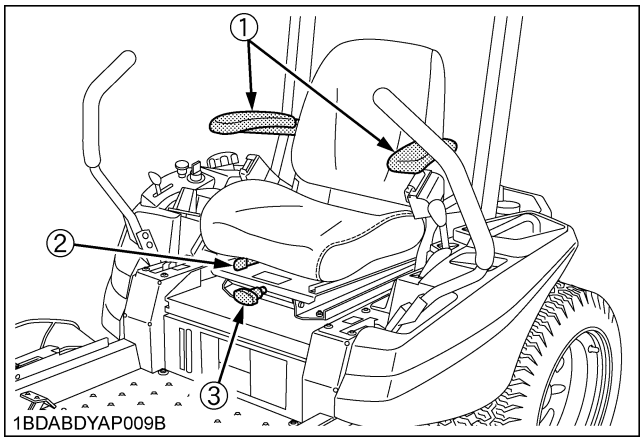

(1) Armrest
(2) Fore-aft adjusting handle
(3) Suspension adjust knob (if equipped)

◆ **How to adjust the operator's seat**

- Fore-aft adjustment
  Pull the seat adjusting lever and slide the seat.

◆ **Suspension adjustment (if equipped)**

Pull the suspension adjust knob and turn it to achieve the optimum suspension setting. After setting, keep the knob oriented horizontally and push the knob back.

◆ **Arm rest**

Arm rest may be set at upright position if desired.

IMPORTANT :

- After adjusting the operator's seat, be sure to check and see that the seat is securely locked.

■Seat Belt

WARNING

To avoid serious injury or death:

- **Always use the seat belt when the ROPS is installed.**
- **Do not use the seat belt if a foldable ROPS is down or there is no ROPS.**

Adjust the seat belt for proper fit and connect to the buckle. The seat belt is an auto-locking retractable type.

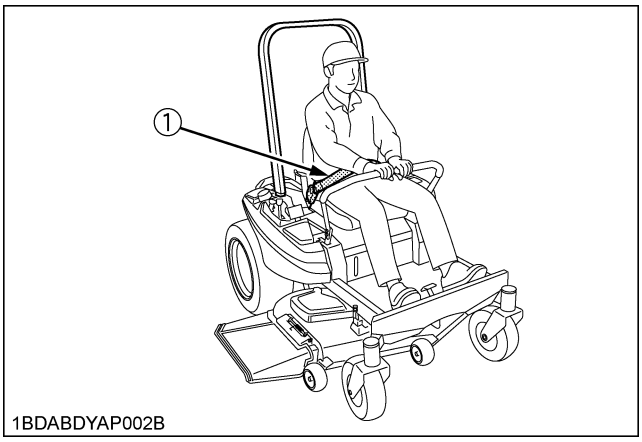

(1) Seat belt

2. Select Light Switch Positions. (if equipped)

■Light Switch

Pushing the light switch forward illuminates the headlights and pushing it rearward turns the lights off.

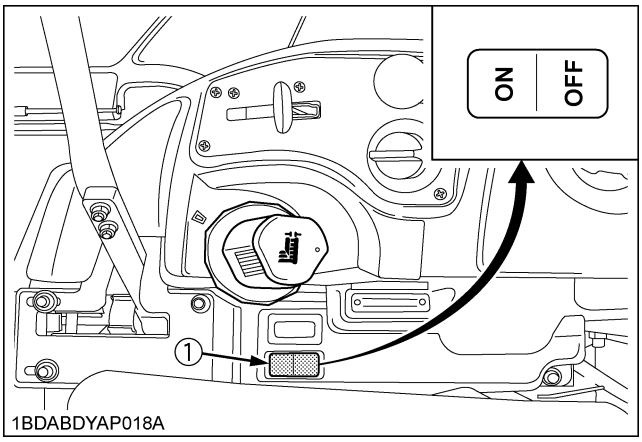

(1) Light switch

https://truckmanualshub.com/

3. Start the engine.
See "OPERATING THE ENGINE" section.

4. Raise the implement.

■Mower Lift Pedal

The mower lift pedal is used to raise and lower the mower deck. To raise and lock the mower deck at carry position, push the pedal to the end of the pedal stroke. To lower the mower deck, push the pedal all the way then release the pedal to the desired mower deck cutting height.

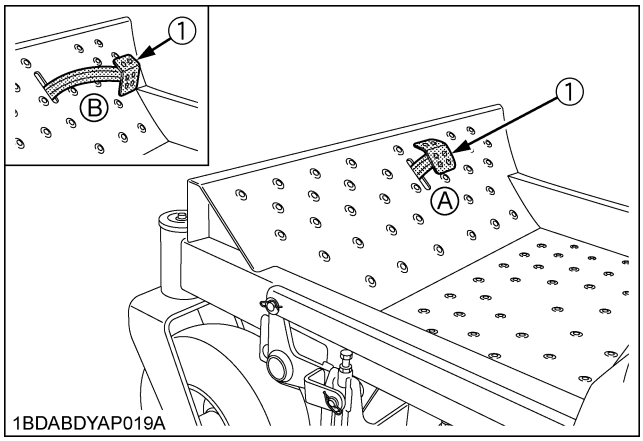

(1) Mower lift pedal
(A) "RAISE and LOCK" position
(B) "LOWER" position

5. Accelerate the engine.

■Throttle Lever

Moving the throttle lever backward decreases the engine speed and moving it forward increases the engine speed.

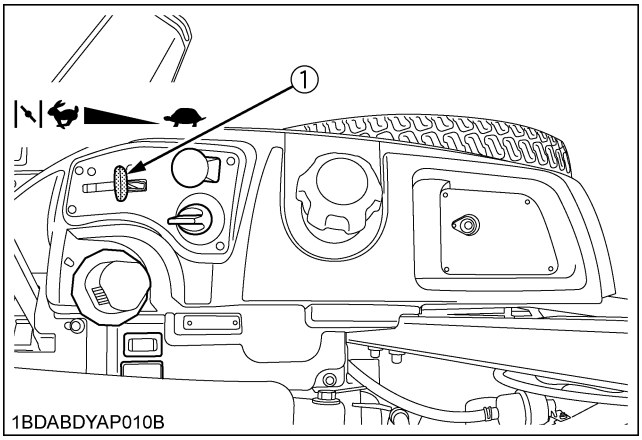

(1) Throttle lever
"INCREASE"
"DECREASE"
"CHOKE"

6. Unlock the parking brake.

■Parking Brake Lever

To release the parking brake:

Place the parking brake lever in the "DISENGAGED" position.

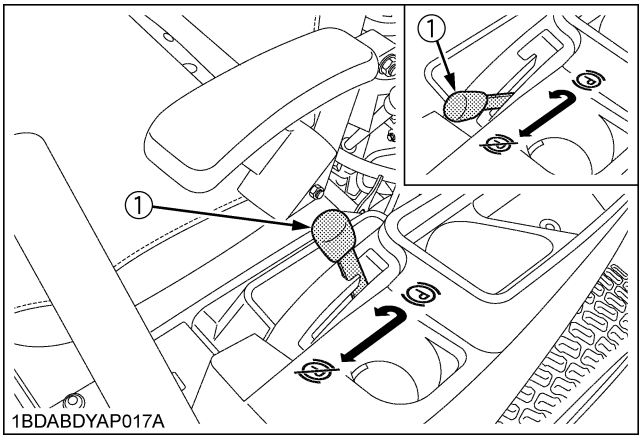

(1) Parking brake lever
(P) "ENGAGED"
(N) "DISENGAGED"

https://truckmanualshub.com/

7. Operate the machine.

■Motion Control Lever

WARNING

To avoid serious injury:

- **Understand how to use the motion control levers and practice in an unrestricted area at a little more than an idle speed without the mower engaged until becoming proficient in the operation of the machine.**
- **Do not move motion control levers from forward to reverse or reverse to forward position rapidly.**
  Sudden direction changes could cause loss of control or damage to the machine or property.
- **Do not make sharp turns at high speeds.**
  Fast and sharp turns could cause loss of control.
- **Motion control levers must be in "NEUTRAL LOCK" position to safely enter and exit the operator's seat or to carry out maintenance and safety checks.**
- **This machine can make sharp turns. Always make sure your intended path is clear of obstructions or persons.**

Stop position

◆ **Neutral lock position**

- Forward and reverse movement of the motion control levers are prevented when levers are in "NEUTRAL LOCK" position. (Engine can only be started with levers in this position.)

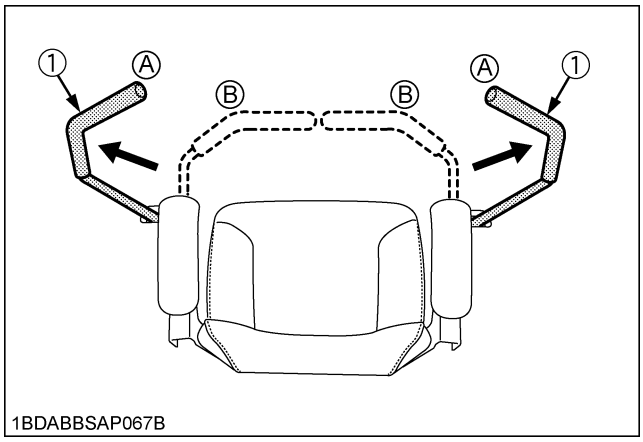

(1) Motion control levers
(A) "NEUTRAL LOCK" position
(B) "NEUTRAL" position (held by hand)

Operating position

Machine speed and steering is controlled by the motion control levers, when the engine is running and the parking brake is released.

WARNING

To avoid serious injury:

- **No control is provided by the motion control levers when the engine is off.**

◆ **Neutral position**

- Grasp the motion control levers and move them inward from the "NEUTRAL LOCK" position so that the machine is in "NEUTRAL". (Engine cannot be restarted.)

◆ **Forward and Reverse Motion:**

1. Move throttle lever to the "FAST" position.
2. Release the parking brake.
3. Move both motion control levers from the "NEUTRAL LOCK" position inward to the "NEUTRAL" position.
4. Push the control levers slowly forward to begin forward motion.
   To move reverse:
   Pull both control levers slowly rearward at the same time to begin reverse motion.
   To stop:
   Move and hold both motion control levers to the "NEUTRAL" position until the machine comes to a stop.

WARNING

To avoid serious injury:

- **The motion control lever adjustment is important to ensure the machine operates properly.**

NOTE :

- The motion control linkages are adjustable.
  If adjustment is required, see "ADJUSTMENT" section. We recommend you to contact your local KUBOTA Dealer.

https://truckmanualshub.com/

FORWARD:

- Push both motion control levers forward equally at the same time. For forward travel in a straight line.

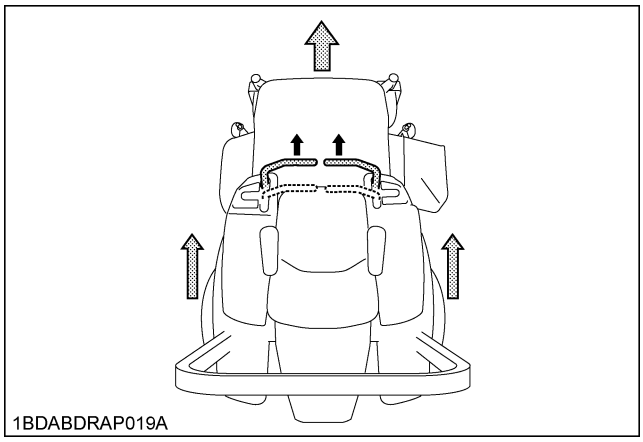
1BDABDRAP019A

REVERSE:

- Pull both motion control levers past center rearward equally at the same time. For rearward travel in a straight line.

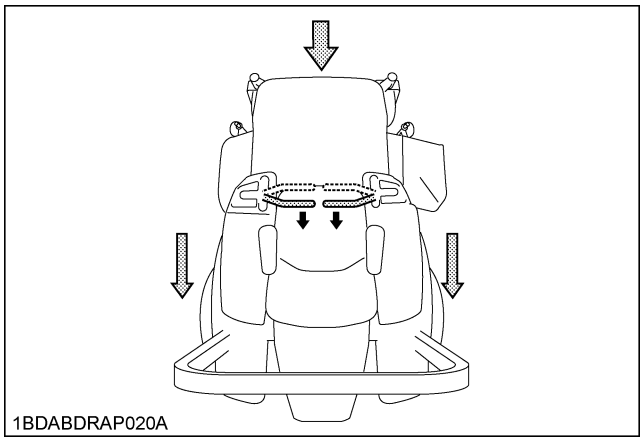
1BDABDRAP020A

GENERAL LEFT TURN:

- Push right motion control lever further forward than the left motion control lever. For forward travel to the left.

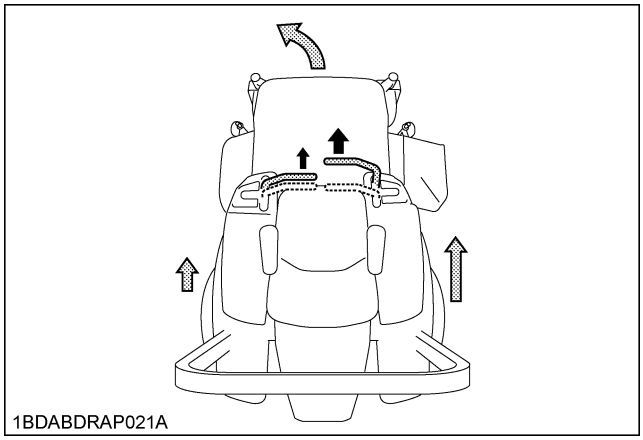
1BDABDRAP021A

GENERAL RIGHT TURN:

- Push left motion control lever further forward than the right motion control lever. For forward travel to the right.

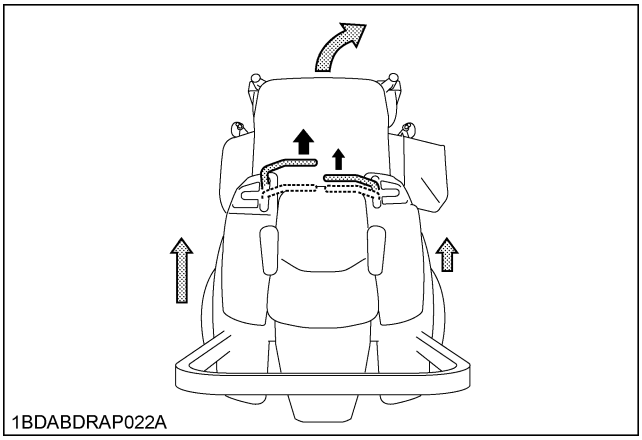
1BDABDRAP022A

SHARP (ZERO) LEFT TURN:

- Push right motion control lever forward and pull left motion control lever rearward at the same time.

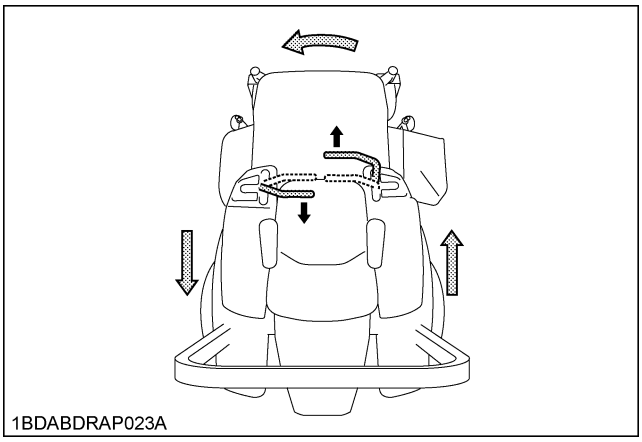
1BDABDRAP023A

SHARP (ZERO) RIGHT TURN:

- Push left motion control lever forward and pull right motion control lever rearward at the same time.

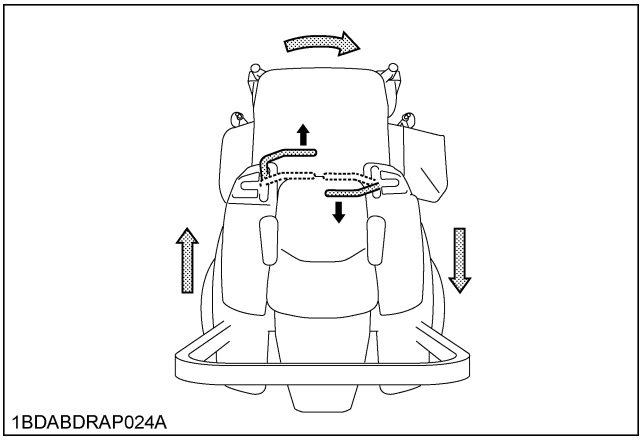
1BDABDRAP024A

https://truckmanualshub.com/

STOPPING

WARNING

To avoid serious injury:

- **Park the machine on level ground.**
  If necessary to park on an incline,
  (1) Stop the machine,
  (2) Apply the parking brake, then
  (3) Stop the engine.
- **If you stop the engine on an incline without applying the parking brake, the machine could move and run away.**

IMPORTANT :

- The parking brake lever is for parking use only. If the parking brake is applied when the motion control levers are not in "NEUTRAL LOCK" position, the engine will stop. This feature is to prevent brake and transmission damage during operation.

1. Move both motion control levers to the "NEUTRAL" position to stop the machine.
2. Move both motion control levers to "NEUTRAL LOCK" position.
3. Apply parking brake.
4. Move the throttle lever to the half speed position and push PTO switch to the "DISENGAGE" (OFF) position.
5. Lower all implements to the ground.
6. Turn off the engine and remove the key.

IMPORTANT :

- Do not stop the engine when the machine is on an incline for a long time. The engine oil may go into the carburetor and the muffler through the valve system.
- Place the throttle control lever in the half speed position to help prevent the engine from backfiring before stopping the engine.

PARKING

TO LOCK:

Place the parking brake lever in the "ENGAGED" position.

TO UNLOCK:

Place the parking brake lever in the "DISENGAGED" position.

WARNING

To avoid serious injury:
Before leaving the operator's position,

- **Apply parking brake.**
- **Lower all implements to the ground.**
- **Shut off the engine.**
- **Remove the key.**
- **Place the motion control levers in the "NEUTRAL LOCK" position.**

If necessary to park on an incline, be sure to chock the wheels on the downhill side to prevent accidental rolling of the machine.

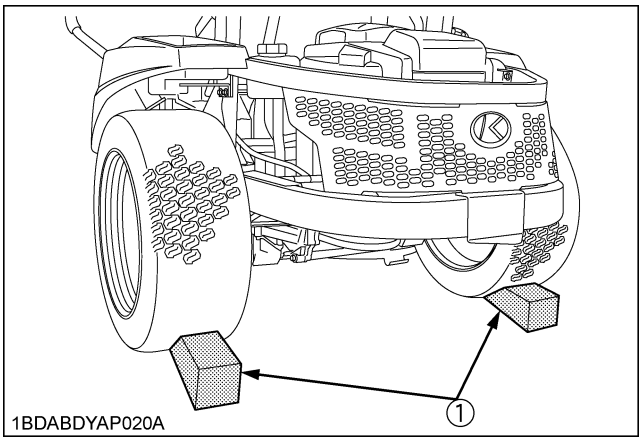

(1) Chocks

https://truckmanualshub.com/

TRANSPORTING

IMPORTANT :

1. Transport the machine on a trailer.
   - Turn the carburetor fuel valve to the "OFF" position.
   - Fasten the machine to the trailer.
2. Do not attempt to tow this machine, or damage to the transmission may result.
3. When transporting the machine over a long distance:
   - Make sure to lift the mower by the mower lift pedal.

■Hydrostatic Transaxle Bypass Rods

WARNING

To avoid serious injury:

- **Do not touch muffler or exhaust pipes while they are hot; severe burns could result.**

IMPORTANT :

- Do not push the machine without pulling the bypass rods, or transmission damage may occur.
- Never pull the rods with the engine running.

1. While facing the machine from the rear, pull the left side HST bypass rod out of the "OPERATING POSITION" hole and place it into the "BYPASS POSITION" hole.
   See the figure below.

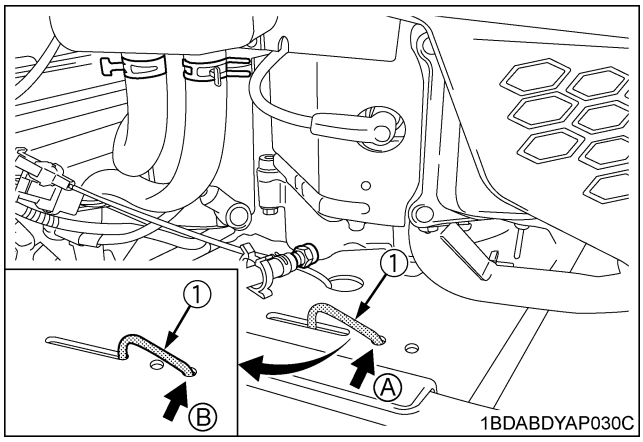

(1) Left side HST bypass rod (A) Operating position (B) Bypass position

2. Pull the right side HST bypass rod out of the "OPERATING POSITION" hole and pull to the "BYPASS POSITION". Continue to hold the right side HST bypass rod in the "BYPASS POSITION" in order to move the machine.
   See the figure below.

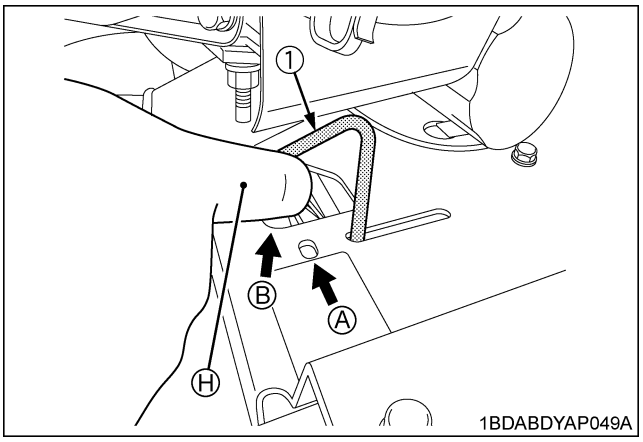

(1) Right side HST bypass rod (A) Operating position (B) Bypass position (H) "HOLD"

3. After moving, place both the right side and left side HST bypass rod back into the "OPERATING POSITION" hole.

https://truckmanualshub.com/

OPERATING THE MOWER

MAKING THE MOST OF YOUR MOWER

1. When using your mower for the first time, choose a smooth level area and cut in straight and slightly overlapping strips.
2. The size and type of the area to be mowed will determine the proper mowing pattern. Take into account obstructions, such as trees, fences and buildings. To keep grass clippings off fences, sidewalks, etc., it is advisable to go over the outside of the area to be mowed several times in a clockwise direction. To mow the area remaining, work in a counterclockwise direction so that the clippings are dispersed onto the previously cut area.
3. Always keep the left side of the mower toward trees, posts or other obstacles on the first trip around the obstacle.
4. Most lawns should be mowed to keep the grass approximately 50 to 80 mm (2 to 3 in.) high. Best results are obtained by cutting often and not too short. To keep a green lawn, never mow more than 1/3 of the height of the grass or a maximum of 25 mm (1 in.) in 1 mowing.
   For extremely tall grass, set the cutting height at maximum cutting height for the first mowing, then reset to the desired height and mow again. Allow the grass to grow to 80 mm (3 in.), then cut off only the top inch.
5. For best appearance, grass should be cut in the afternoon or evening when it is free of moisture.

ADJUSTING CUTTING HEIGHT

DANGER

To avoid serious injury or death:

- **Do not engage the mower in the transport position.**

1. Before adjusting cutting height, check that all tire pressures are correct. If necessary adjust to the correct tire pressure.
2. To set the cutting height, push the mower lift pedal to raise mower deck to the top position. Then adjust the cutting height control dial to desired height.

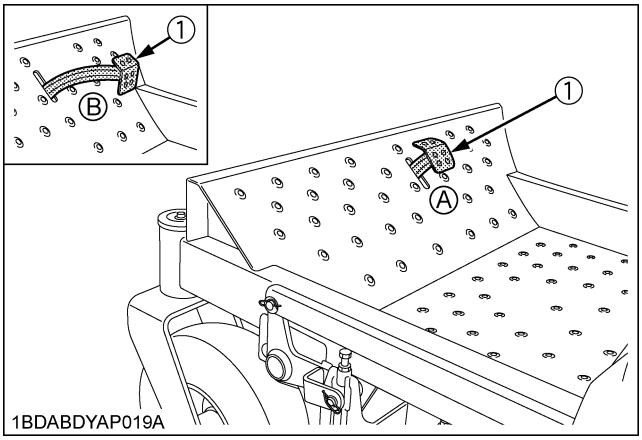

(1) Mower lift pedal
(A) "RAISE and LOCK" position
(B) "LOWER" position

3. Use the higher settings for mowing in a rough area or when mowing tall grass. Lower settings should be used only for smooth lawns where short grass is desired.

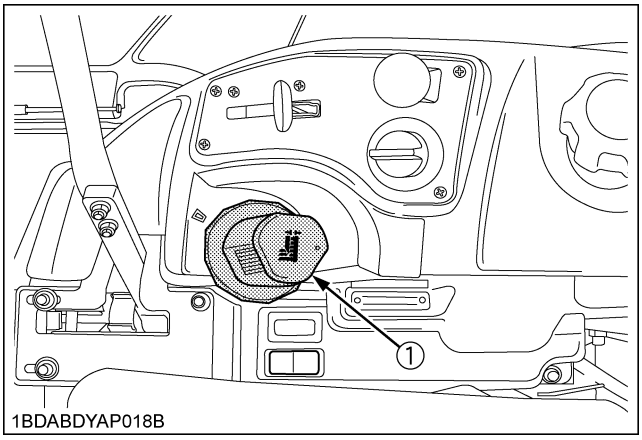

(1) Cutting height control dial

https://truckmanualshub.com/

4. Lower the mower deck by pushing the mower lift pedal again. This lowers the mower deck from the "TRANSPORT" position to the "OPERATING" position.
5. Adjust the anti-scalp rollers' height as recommended below for normal operating condition.

IMPORTANT :
- Never allow roller to contact the ground continuously as premature roller wear may develop if set incorrectly.
- Anti-scalp rollers must maintain a minimum clearance of 6 mm (1/4 in.) to the ground.

[BOLT]

1BDABDYAP021A

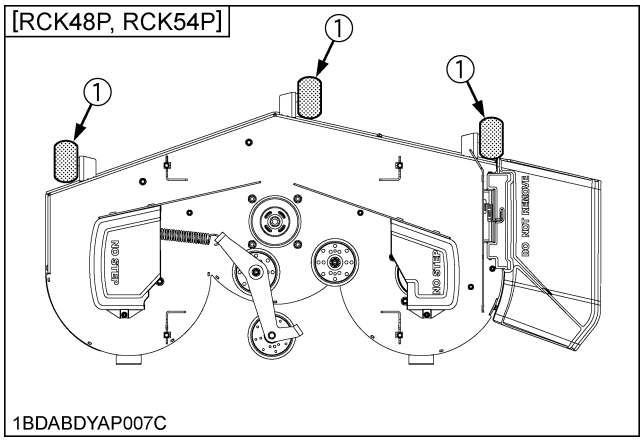

1BDABDYAP007C

(1) Anti-scalp roller (Front, bolt shift type)

NOTE :
- Operation of the mower deck in "TRANSPORT" position is allowed in order to achieve a cutting height of 4.5".

OPERATING MOWER

DANGER

To avoid serious injury or death:
- **Do not operate the mower without the discharge deflector being in place properly.**

WARNING

To avoid serious injury:
- **Clear the work area of objects which might be picked up and thrown.**
- **Do not direct the opening of the deflector at bystanders especially children or animals. Ejected objects may cause injury. Plan your mowing carefully before starting operations.**
- **Keep bystanders and animals away from the mowing area.**
- **Be sure to disengage the PTO clutch of the mower before attempting to start the engine.**

■PTO Switch

To engage the PTO, pull the PTO switch to the "ENGAGED" (ON) position.

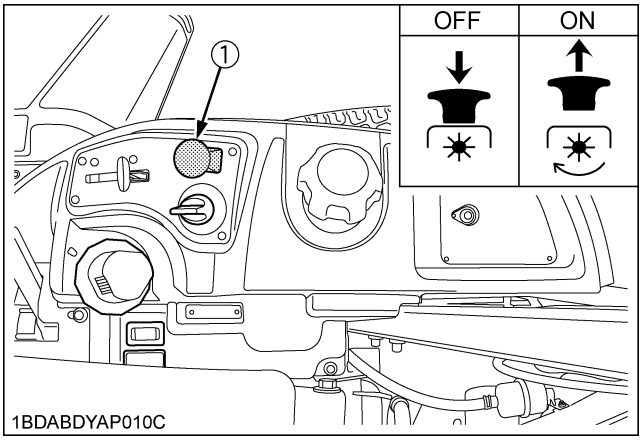

1BDABDYAP010C

(1) PTO switch

"ENGAGED" (ON)

"DISENGAGED" (OFF)

1. If you get off the seat while the PTO is running, the engine will stop automatically. (Operator presence control)
2. Before starting the engine, push the PTO switch to the "DISENGAGED" (OFF) position. If it is at the "ENGAGED" (ON) position, the engine will not start.

NOTE :
- These interlock features are built-in.

https://truckmanualshub.com/

■Starting

WARNING

To avoid serious injury:

- **Engine components can get extremely hot from operation. To prevent severe burns, do not touch these areas while the engine is running, or immediately after it is turned off.**
  Never operate the engine without heat shields or guards.

1. Sit on the operator's seat.
2. Start the engine.
3. Engage the PTO switch.
4. Disengage the parking brake.
5. Speed up the engine by moving the throttle lever forward.
6. Push or pull the motion control levers to move forward or backward.

IMPORTANT :

- Never attempt to move the machine with the parking brake "ON".

NOTE :

- Keep the engine running at full throttle for best results. Control the travel speed with the motion control levers.
- During heavy duty use, operate the machine at a slower ground speed or go over the area twice.
- Keep the mower deck in the raised position when the mower is disengaged.
- The mower will not cut cleanly if the ground speed is too high or if the blade speed drops due to an overload.
- If debris builds up on the grass screen or other cooling air intake areas, stop the engine and clean them. Operating the engine with blocked or dirty air intake and cooling areas causes damage due to overheating.

https://truckmanualshub.com/

TIRES AND WHEELS

TIRES

WARNING

To avoid serious injury:

- **Do not attempt to mount a tire. This should be done by a qualified person with the proper equipment.**
- **Always maintain the correct tire pressure. Do not inflate tires above the recommended pressure shown in the Operator's Manual.**
- **Inflation pressure in front tires rises quickly when using compressed air.**

WARNING

To avoid serious injury:

Never operate machine with a loose rim, wheel, or axle.

- **Whenever bolts are loosened, retighten to specified torque.**
- **Check all bolts frequently and keep them tightened.**

■Inflation Pressure

Though the inflation pressure is factory-set to the prescribed level, it naturally drops slowly in the course of time. Thus, check it everyday and inflate as necessary.

	Tire sizes	Recommended Inflation Max. Pressure
Front	11 x 4 - 5, 4PR Smooth	170 kPa (1.7 kgf/cm², 25 psi)
Rear	22 x 10 - 14, 4PR Turf	110 kPa (1.1 kgf/cm², 16 psi)

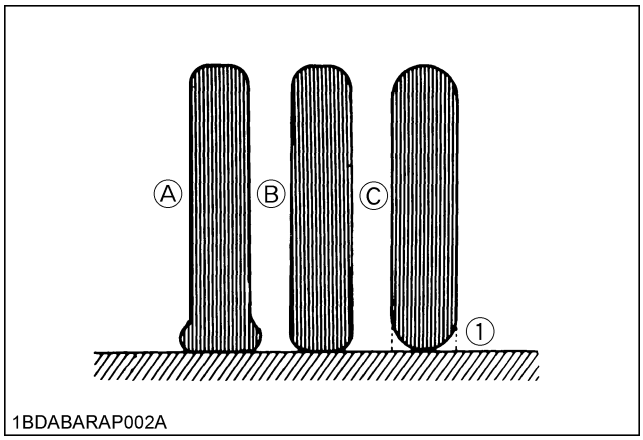

(1) Ground

(A) "INSUFFICIENT"
(B) "NORMAL"
(C) "EXCESSIVE"

WHEELS

IMPORTANT :

- When re-fitting a wheel, tighten the wheel bolt to the following torques then recheck after traveling 200 m (200 yards) changing directions several times.

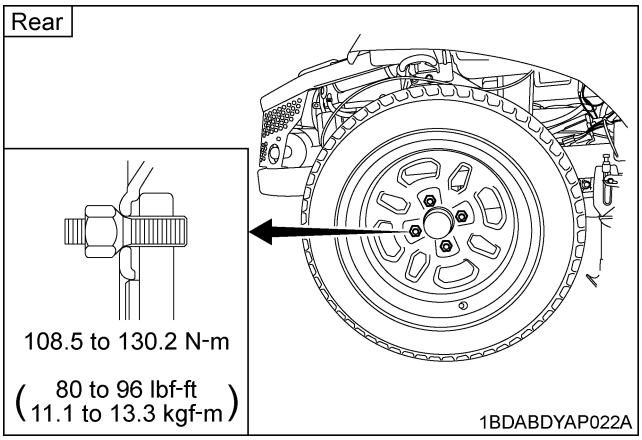

Wheels with beveled or tapered holes:
Use the tapered wheel nut.

https://truckmanualshub.com/

■Remove and Install Front Caster Wheels

◆ **Removing**

1. Park the machine on a firm and level surface.
2. Stop the engine and apply parking brake.
3. Lift the front of machine with a safe lifting device.
4. Remove the nut and the wheel bolt.
5. Remove the wheel from assembly yoke.

◆ **Installing**

1. Install the replacement wheel.
2. Install the wheel bolt and the nut.
3. Tighten the nut.

Reference

Tightening torque	48 to 56 N-m (36 to 41 lbf-ft) (4.9 to 5.7 kgf-m)

4. Lower machine.

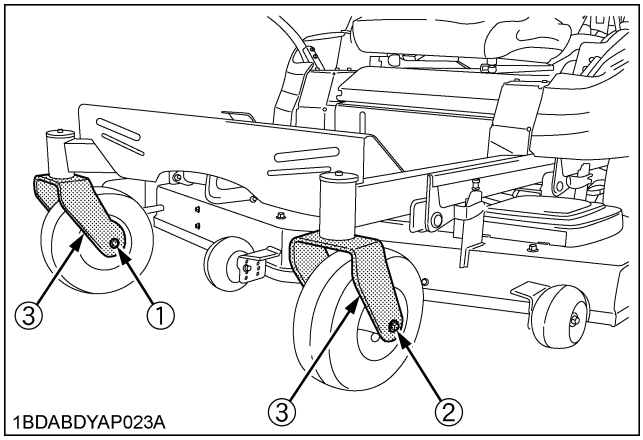

(1) Nut
(2) Wheel bolt
(3) Yoke

https://truckmanualshub.com/

MAINTENANCE

SERVICE INTERVALS

The following servicing tasks should be carried out on the machine at the stated running-time intervals.

[Z122E, Z125E]

No.	Items			Indication hour meter (Hr)															Ref. Page	
				5	25	50	100	150	200	250	300	350	400	450	500	550	600	After since		
1	Engine oil		Change	◎		○	○	○	○	○	○	○	○	○	○	○	○	every 50Hr or every 1 year	41 55	*1
2	Engine oil filter		Replace			○	○	○	○	○	○	○	○	○	○	○	○	every 50Hr or every 1 year	42 55	*1
3	Transaxle oil filter		Replace				◎						○					every 400Hr	53	
4	Transaxle fluid		Change				◎						○					every 400Hr	54	
5	Engine start system		Check			○	○	○	○	○	○	○	○	○	○	○	○	every 50Hr	39	
6	OPC system		Check			○	○	○	○	○	○	○	○	○	○	○	○	every 50Hr	40	
7	Air cleaner	Precleaner element (only Z122E)	Clean		○	○	○	○	○	○	○	○	○	○	○	○	○	every 25Hr or every 1 year	36	*2
			Replace				○		○		○		○		○		○	every 100Hr or every 1 year	44 55	
		Air cleaner element	Clean		○	○	○	○	○	○	○	○	○	○	○	○	○	every 25Hr or every 1 year	37	*2
			Replace				○		○		○		○		○		○	every 100Hr or every 1 year	44 55	
8	Carbon canister air filter		Check			○	○	○	○	○	○	○	○	○	○	○	○	every 50Hr	40	*3
			Replace															every 2 years	56	
9	Fuel filter		Check				○		○		○		○		○		○	every 100Hr	47	
			Replace				○		○		○		○		○		○	every 100Hr or every 1 year	47	*3
10	Fuel line		Check				○		○		○		○		○		○	every 100Hr	47	
			Replace															every 2 years	56	*3
11	Battery condition		Check				○		○		○		○		○		○	every 100Hr	48	
12	Throttle cable		Adjust				○		○		○		○		○		○	every 100Hr	50	
13	Muffler and Spark Arrester (if equipped)		Check			○	○	○	○	○	○	○	○	○	○	○	○	every 50Hr or every 1 year	43 55	

https://truckmanualshub.com/

No.	Items		Indication hour meter (Hr)															Ref. Page	
			5	25	50	100	150	200	250	300	350	400	450	500	550	600	After since		
14	Spark plug	Check				○		○		○		○		○		○	every 100Hr	46	
		Replace															every 1 year	55	
15	Hydraulic hose	Check						○				○				○	every 200Hr	52	
		Replace															every 2 years	56	*3
16	Engine breather hose	Replace															every 2 years	56	*4
17	Engine shroud	Clean				○		○		○		○		○		○	every 100Hr or every 1 year	45	
18	Electric clutch	Adjust												○			every 500Hr	54	
19	Combustion chamber	Clean															*5	55	
20	Fuse	Replace															Service as required	56	
21	Blade	Replace																57	
22	Mower belt	Replace																58	
23	Engine valve clearance	Check															every 1 year	55	*4 *6

IMPORTANT :

- The jobs indicated by ◎ must be done initially.

*1 This maintenance should be done every 50 hours or every 1 year if using a standard oil filter.
If using a high-efficiency oil filter, it may be extended to every 100 hours or every 1 year.
A genuine KUBOTA oil filter is a high-efficiency oil filter.

*2 This maintenance should be done daily or more often in dusty condition than in normal conditions.
Suggested cleaning interval is every 25 hours or every 1 year in normal conditions.

*3 These items should be serviced by an authorized KUBOTA Dealer, unless the owner has the proper tools and is mechanically proficient.

*4 Consult your local KUBOTA Dealer for this service.

*5 On every after 500 Hr, clean it if necessary.

*6 Not required unless engine performance problems are noted.

https://truckmanualshub.com/

[Z121S, Z125S]

No.	Items			Indication hour meter (Hr)														Ref. Page	
				25	50	100	150	200	250	300	350	400	450	500	550	600	After since		
1	Engine oil		Change			○		○		○		○		○		○	every 100Hr	43	*1
2	Engine oil filter		Replace			○		○		○		○		○		○	every 100Hr	51	*1
3	Transaxle oil filter		Replace			◎						○					every 400Hr	53	
4	Transaxle fluid		Change			◎						○					every 400Hr	54	
5	Engine start system		Check		○	○	○	○	○	○	○	○	○	○	○	○	every 50Hr	39	
6	OPC system		Check		○	○	○	○	○	○	○	○	○	○	○	○	every 50Hr	40	
7	Air cleaner	Precleaner element	Clean	○	○	○	○	○	○	○	○	○	○	○	○	○	every 25Hr	36	*1
			Replace			○		○		○		○		○		○	every 100Hr or every 1 year	44 55	*1
		Air cleaner element	Replace			○		○		○		○		○		○	every 100Hr or every 1 year	44 55	*1
8	Carbon canister air filter		Check		○	○	○	○	○	○	○	○	○	○	○	○	every 50Hr	40	*2
			Replace														every 2 years	56	
9	Fuel filter		Check			○		○		○		○		○		○	every 100Hr	47	
			Replace			○		○		○		○		○		○	every 100Hr	47	*2
10	Fuel line		Check			○		○		○		○		○		○	every 100Hr	47	
			Replace														every 2 years	56	*2
11	Battery condition		Check			○		○		○		○		○		○	every 100Hr	48	
12	Throttle cable		Adjust			○		○		○		○		○		○	every 100Hr	50	
13	Muffler and Spark Arrester (if equipped)		Check		○	○	○	○	○	○	○	○	○	○	○	○	every 50Hr or every 1 year	43 55	
14	Spark plug		Check			○		○		○		○		○		○	every 100Hr	46	
			Replace														every 1 year	55	
15	Hydraulic hose		Check					○				○				○	every 200Hr	52	
			Replace														every 2 years	56	*2
16	Engine breather hose		Replace														every 2 years	56	*3
17	Engine shroud		Clean			○		○		○		○		○		○	every 100Hr	45	
18	Electric clutch		Adjust											○			every 500Hr	54	
19	Combustion chamber		Clean														*4	55	
20	Fuse		Replace														Service as required	56	
21	Blade		Replace															57	
22	Mower belt		Replace															58	
23	Engine valve clearance		Check											○			every 500Hr	55	*3

IMPORTANT :

- The jobs indicated by ◎ must be done initially.

  *1 This maintenance should be done daily or more often in dusty condition than in normal conditions.

  *2 These items should be serviced by an authorized KUBOTA Dealer, unless the owner has the proper tools and is mechanically proficient.

  *3 Consult your local KUBOTA Dealer for this service.

  *4 On every after 500 Hr, clean it if necessary.

https://truckmanualshub.com/

- GASOLINE ENGINE EMISSION RELATED MAINTENANCE INSTRUCTIONS:
  1. Non-warranty maintenance, repair, or replacement of the emission control devices and systems should be performed by a qualified repair establishment or individual which has the experience and equipment to perform such work.
     See the Emissions Warranty Statement.
  2. To ensure the best quality and reliability, use new KUBOTA Genuine parts or their equivalents for repair and replacement, whenever you have maintenance done.

LUBRICANTS AND FUEL

Place	Capacities				Lubricants
	Z122E	**Z121S**	**Z125E**	**Z125S**	
Fuel	16 L (4.2 U.S. gals.)				• Automobile unleaded or regular gasoline • Unleaded gasoline 87 octane or higher
Engine crankcase	1.8 L (1.9 U.S.qts.)*1				• Engine oil: API service Classification SG, SH, SJ or higher Above 10 ℃ (50 ℉)...SAE30 Between -18 ℃ (0 ℉) to 38 ℃ (100 ℉)...SAE10W-30 Below 0 ℃ (32 ℉)...SAE5W-30
Transmission case with filter, hose and tank (RH & LH)	4.8 L (5.1 U.S.qts.)				• Engine oil: API service Classification SL SAE20W-50

Note *1 Oil amount when the oil level is at the upper level of the oil level gauge.

NOTE :

◆ Engine Oil:
- Oil used in the engine should have an American Petroleum Institute (API) service classification and proper SAE Engine Oil according to the ambient temperatures as shown above.
- Synthetic oil meeting the listed classifications may be used after 50 hours of run time.

◆ Fuel:
- Clean, fresh, unleaded gasoline.
- A minimum of 87 octane / 87AKI (90 RON).
- Gasoline with up to 10% ethanol (gasohol) or up to 15% MTBE (methyl tertiary butyl ether) is acceptable.
- Do not use unapproved gasoline, such as E85. Do not mix oil in gasoline or modify the engine to run on alternate fuels. This will damage the engine components and **void the engine warranty**.
- This engine is certified to operate on gasoline. The emissions control system for this engine is EM (Engine Modifications).
- **High Altitude:**
  At altitudes over 5,000 feet (1524 meters), a minimum 85 octane / 85 AKI (89 RON) gasoline is acceptable. To remain emissions compliant, high altitude adjustment is required. Operation without this adjustment will cause decreased performance, increased fuel consumption, and increased emissions.
  Operation of the engine at altitudes below 2,500 feet (762 meters) with the high altitude kit is not recommended.
- Indicated capacity of fuel is manufacture's estimate.

https://truckmanualshub.com/

PERIODIC SERVICE

HOW TO RAISE THE OPERATOR'S SEAT

◆ **Raise**

WARNING

To avoid serious injury:

- **Fully raise the operator's seat. (To the resting position) Do not keep the seat halfway.**

1. Pull the latch lever on the seat panel rearward.

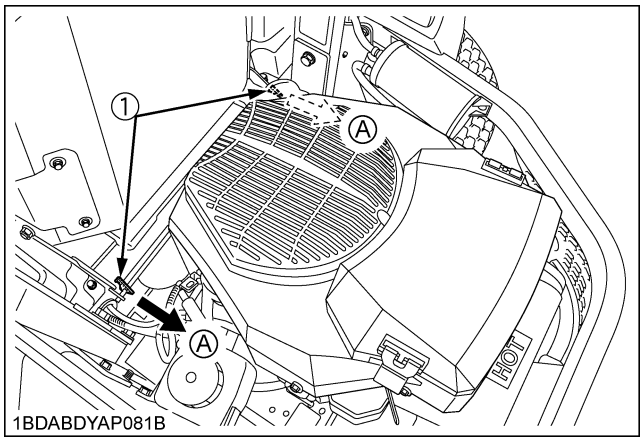

(1) Latch lever *(A) "PULL"*

2. Raise the operator's seat to the resting position.

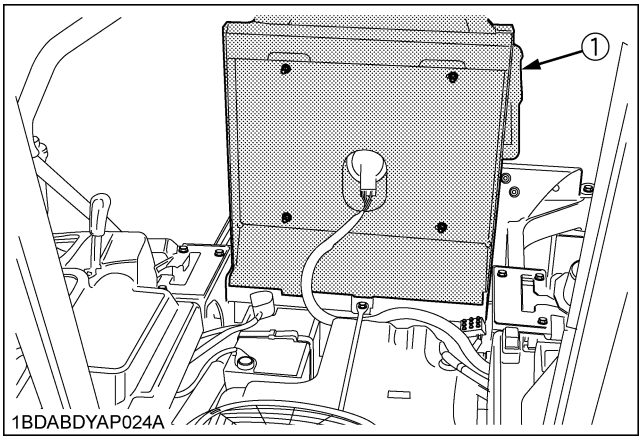

(1) Operator's seat

◆ **Lower**

WARNING

To avoid serious injury:

- **Do not drop the seat to close it.**
- **Watch your hands. Do not place your hands under the seat, when closing.**

1. Lower the seat slowly to lock.

https://truckmanualshub.com/

DAILY CHECK

To prevent trouble from occurring, it is important to know the condition of the machine. Check it before starting.

WARNING

To avoid serious injury:

- **Be sure to check and service the machine on a level surface with the engine shut off, the key removed and the parking brake securely set or chock the rear wheels.**

	No.	Check item	Ref. Page
Walking around the machine	1	Damage of machine body, tightness of all bolts, nuts and pins, etc.	-
	2	Fuel and oil leak	-
	3	Tire pressure, wear and damage	25 34
	4	Engine oil level	32
	5	Fuel level	33
	6	Air intake screen	34
	7	Transaxle fluid level	35
	8	Air cleaner (precleaner element)	36
	9	Machine body cleaning	-
	10	Clean area around muffler and engine controls.	-
Mower	1	Check all hardware.	-
	2	Make sure all pins are in place	-
	3	Mower deck cleaning	-
	4	Make sure blade bolts are tight	57
	5	Blades and belt wear or damage	57
While sitting in the operator's seat	1	Motion control lever	-
	2	Parking brake	-
	3	Other movable parts	35
Turning the key switch "ON"	1	Headlight (if equipped)	16
Starting the engine	1	Color of the exhaust fumes	-
	2	Check for abnormal noise and vibration.	-
	3	Safety systems. If either of these do not operate properly, contact your local KUBOTA Dealer immediately.	39 40
Others	1	Check the areas where previous trouble was experienced.	-

■Checking Engine Oil Level

WARNING

To avoid serious injury:

- **Always stop the engine and remove the key before checking oil.**

1. Check engine oil before starting and 5 minutes or more after the engine has stopped.
2. Wipe dipstick area clean.
3. To check the oil level, remove the dipstick, wipe it clean, replace it, and draw it out again. Check to see that the oil level is between the 2 notches.
4. Add new oil to the prescribed level at the oil port if necessary.

[Z122E, Z125E]

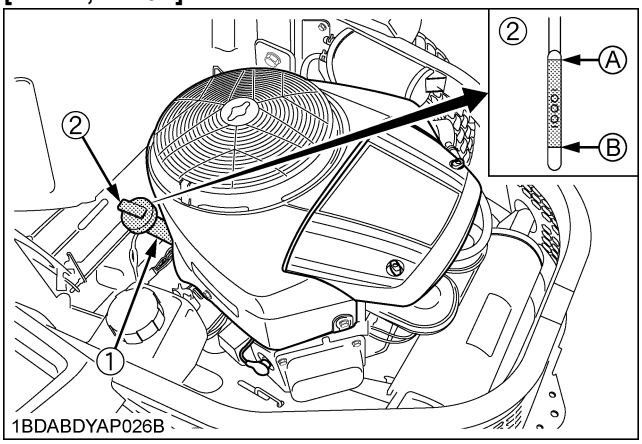

(1) Engine oil port *(A) "UPPER LEVEL"*
(2) Oil level dipstick *(B) "LOWER LEVEL"*

[Z121S, Z125S]

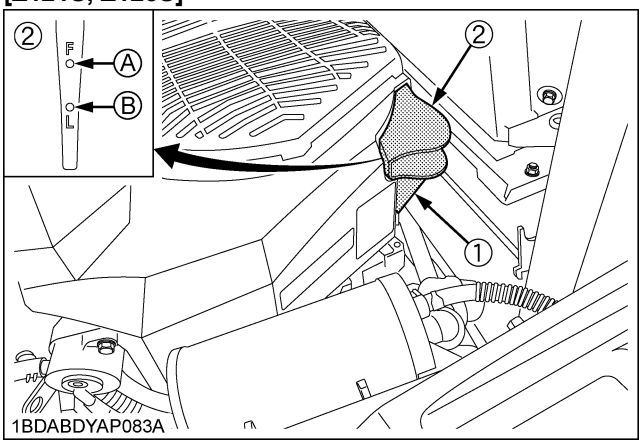

(1) Engine oil port *(A) "UPPER LEVEL"*
(2) Oil level dipstick *(B) "LOWER LEVEL"*

5. When using a different brand or viscosity oil from the previous one, remove all of the old oil and oil filter. Never mix 2 different types of oil.
6. Use the proper Engine Oil SAE according to the ambient temperatures. (See "LUBRICANTS AND FUEL" in "MAINTENANCE" section.)

https://truckmanualshub.com/

■Checking Amount of Fuel and Refueling

WARNING

To avoid serious injury:

- **Handle fuel carefully. If the engine is running, do not fill the fuel tank. If engine is hot, let engine cool several minutes before adding fuel. Do not smoke while filling the fuel tank or servicing the fuel system. Fill fuel tank only to bottom of filler neck. Do not fill completely full. The empty space in the tank allows gasoline to expand, when it heats up. Never remove the fuel tank cap or add fuel when the fuel tank is hot.**

1BDABARAP121A

Check the fuel level. Take care that the fuel tank does not become empty.

Fuel tank capacity	16 L (4.2 U.S.gals.)

IMPORTANT :

- Do not mix oil with gasoline.
- Tighten the fuel cap until it clicks.
- Do not use the fuel cap other than KUBOTA approved one.
- Do not permit dirt or trash or water to get into the fuel system.
- Be careful not to spill fuel during refueling. If a spill should occur, wipe it off at once, or it may cause a fire.

Use only unleaded gasoline with an octane rating index of 87 or higher may be used.

NOTE :

- Use fuel within approximately 30 days after purchase to avoid deterioration in fuel quality, or add fuel stabilizer to keep fuel fresh and stabilized.
- Fuel blend differs from season to season for the best seasonal engine performance. To prevent engine performance troubles such as vapor lock or hard starting, use fuel within the season in which the fuel is purchased.
- Infrequent use of the engine during a season can make fuel stale in the fuel tank of the machine. Stale fuel condition can cause engine performance troubles by varnish and plugged carburetor components.
- Seal the fuel storage container tightly and store it out of sunlight and heat to prevent fuel degradation.
- Condensation in the fuel tank may occur because of various operating or environmental conditions. To reduce condensation and avoid affecting machine operation, fill the fuel tank at the end of daily operations.

IMPORTANT :

- Do not use old fuel.

[Use of alcohol mixed gasoline (Gasohol)]

Use "gasohol" only when the ethanol additive is less than 10% of the fuel. The use of methanol additive is not recommended. For the best results, use unleaded fuel with a minimum of 87 octane.

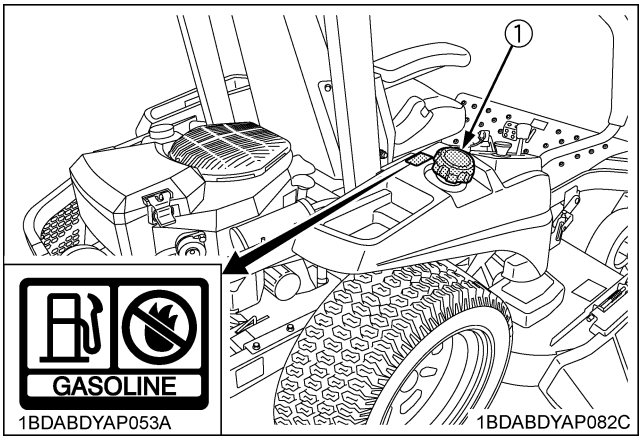

1BDABDYAP053A 1BDABDYAP082C

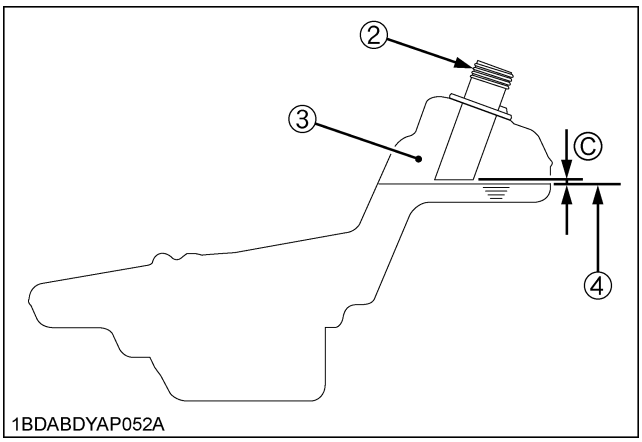

1BDABDYAP052A

(1) Fuel tank cap
(2) Fuel tank filler neck
(3) Empty space
(4) Max. fuel level
(C) Clearance
(Fuel level is under the filler neck.)

https://truckmanualshub.com/

■Checking and Cleaning Air Intake Screen

WARNING

To avoid serious injury:

- **Be sure to stop the engine and remove the key before cleaning.**
- **Make sure that the engine is cool to the touch before cleaning.**

IMPORTANT :

- The air intake screen and air intake area must be clear of debris to prevent the engine from overheating.

Daily or after every 5 hours of operation, check to be sure the air intake screen and the air intake area are clean.
Dirt or chaff around the air intake screen and air intake area or the engine cooling area decrease cooling performance.

1. Check that the air intake screens are clear of grass clippings and debris.
2. If screens are dirty, clean screens with a brush or cloth.
3. Remove the dust and all foreign material from the engine plate.

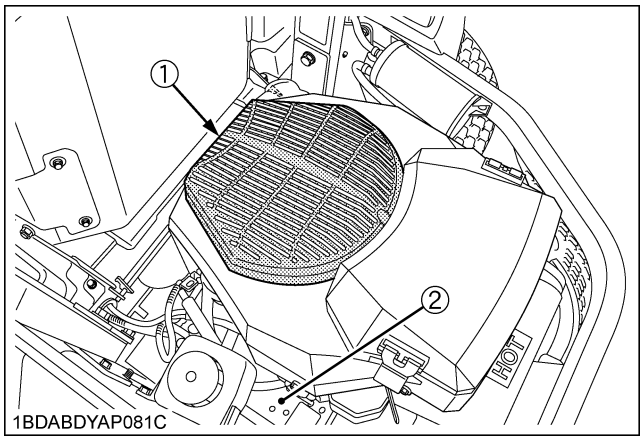

(1) Air intake screen
(2) Engine plate

■Checking Tire Pressure

WARNING

To avoid serious injury:

- **Do not attempt to mount a tire on a rim. This should be done by a qualified person with the proper equipment.**
- **Always maintain the correct tire pressure. Inflation pressure in front tires rises quickly when using compressed air.**
  Do not inflate tires above the recommended pressure shown in the Operator's Manual.

IMPORTANT :

- Do not use tires larger than specified.

■Inflation Pressure

Though the inflation pressure is factory-set to the prescribed level, it naturally drops slowly in the course of time. Thus, check it and inflate as necessary.

	Tire sizes	Recommended Inflation Max. Pressure
Front	11 x 4 - 5, 4PR Smooth	170 kPa (1.7 kgf/cm², 25 psi)
Rear	22 x 10 - 14, 4PR Turf	110 kPa (1.1 kgf/cm², 16 psi)

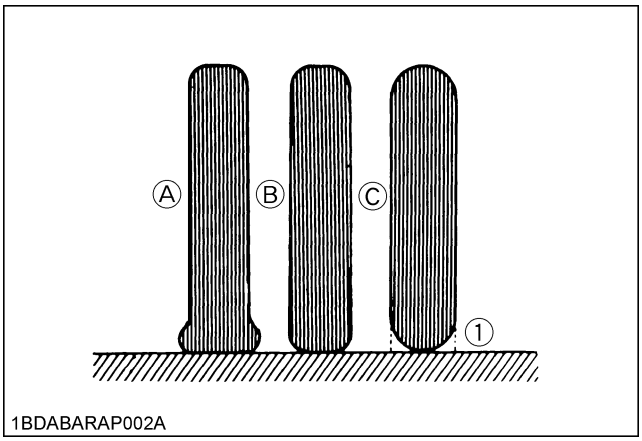

(1) Ground
(A) "INSUFFICIENT"
(B) "NORMAL"
(C) "EXCESSIVE"

https://truckmanualshub.com/

■Checking Transaxle Fluid Level

1. Park the machine on a flat surface, lower the implement to the ground and shut off the engine and remove the key.
2. Check to see that the oil level lies at the "FULL COLD" line while the machine is at ambient temperature.
   If the level is too low, add the new oil to the prescribed level into the tank.
   (See "LUBRICANTS AND FUEL" in "MAINTENANCE" section.)

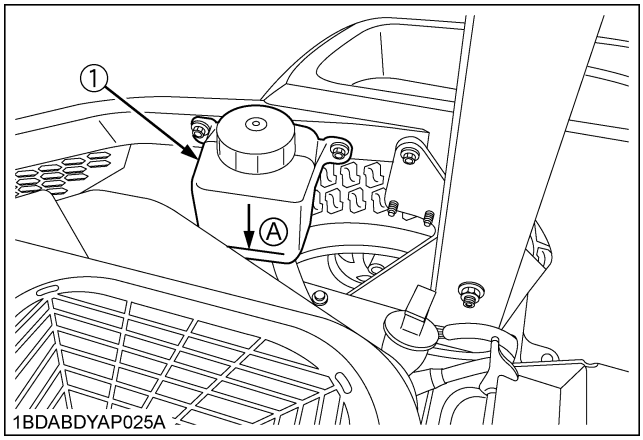

(1) Transaxle fluid tank *(A) Oil level is acceptable at this line.*

IMPORTANT :
- If oil level is low, do not run engine.
  Add the new oil to the prescribed level into the tank.
- Do not overfill the tank.

■Checking Movable Parts

If any of the movable parts, such as levers and pedals, is not smoothly moved because of rust or anything sticky, do not attempt to force it into motion.
In the above case, remove the rust or the sticky object, and apply oil or grease on the relevant spot.
Otherwise, the machine may get damaged.

https://truckmanualshub.com/

EVERY 25 HOURS

■Cleaning Precleaner Element (Except Z125E)

Check the air cleaner **daily** or **before starting the engine**. Check for a buildup of dirt and debris around the air cleaner system. Keep this area clean. Also check for loose or damaged components. Replace all bent or damaged air cleaner components.

NOTE :

- Operating the engine with loose or damaged air cleaner components could allow unfiltered air into the engine causing premature wear and failure.

◆ Clean precleaner

[Z122E]

Wash the precleaner **every 25 hours of operation.** (more often under extremely dusty or dirty conditions.)

1. Loosen the air cleaner cover knobs and remove the air cleaner cover.

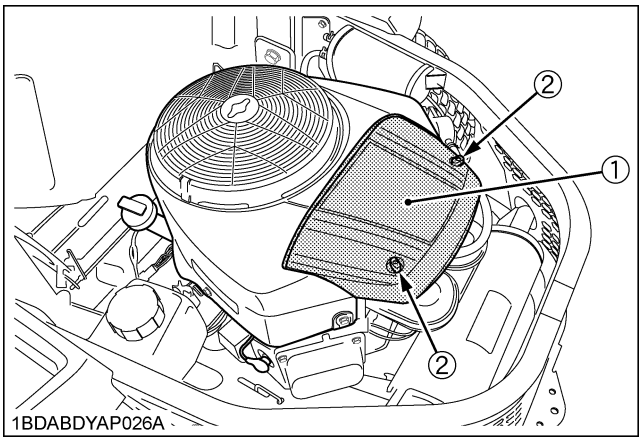

(1) Air cleaner cover
(2) Air cleaner cover knob

2. Remove the air cleaner element with the precleaner and remove the precleaner from it. Make sure the base and the sealing area is clean before reassembly is performed.

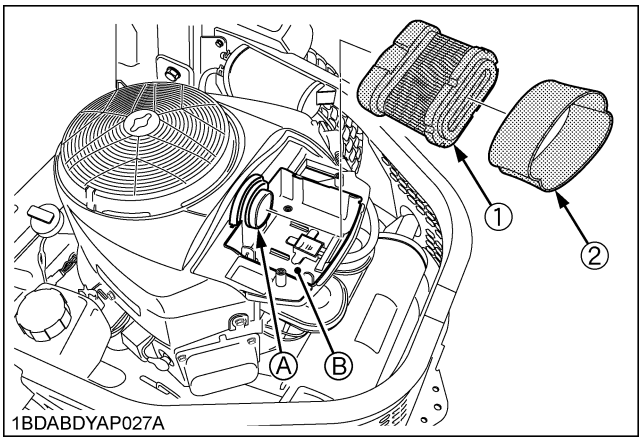

(1) Air cleaner element *(A) Air intake*
(2) Precleaner *(B) Base*

3. Wash the precleaner in warm water with detergent. Rinse the precleaner thoroughly until all traces of detergent are eliminated. Squeeze out excess water. (do not wring.) Allow the precleaner to air dry.
   Do not oil the precleaner.
4. Reinstall the precleaner over the paper element and reinstall them to air intake.
5. Reinstall the air cleaner cover and secure with the 2 knobs.

https://truckmanualshub.com/

[Z121S, Z125S]

Wash and reoil the precleaner **every 25 hours of operation.** (more often under extremely dusty or dirty conditions.)

1. Unlatch the cover and remove the air cleaner cover.
2. Remove the precleaner from the air cleaner element, or remove as an assembly for servicing. Make sure the base and the sealing area is clean before reassembly is performed.

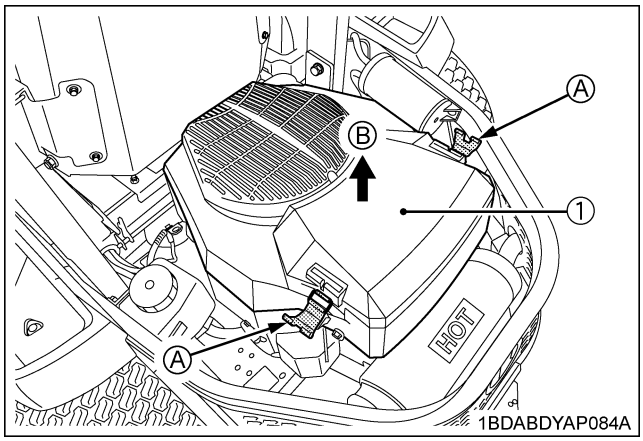

(1) Air cleaner cover *(A) "UNLATCH"*
(B) "REMOVE"

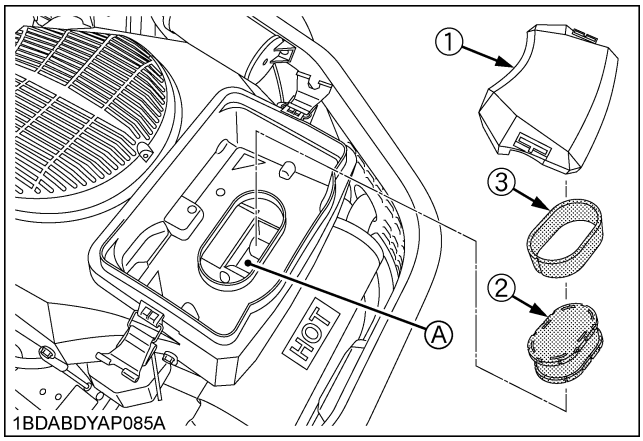

(1) Air cleaner cover *(A) Air intake*
(2) Air cleaner element
(3) Precleaner

3. Wash the precleaner in warm water with detergent. Rinse the precleaner thoroughly until all traces of detergent are eliminated. Squeeze out excess water. (do not wring.) Allow the precleaner to air dry.
4. Saturate the precleaner with new engine oil. Squeeze out all excess oil.
5. Reinstall the precleaner over the paper element and install in air intake.
6. Reinstall the air cleaner cover and secure with the 2 latches.

■Cleaning Air Cleaner Element (Z122E, Z125E)

Every 100 hours of operation or **annually** replace the paper element. Check **every 25 hours of operation**. (More often under extremely dusty or dirty conditions.)

[Z122E]

1. Loosen the air cleaner cover knobs and remove the air cleaner cover.

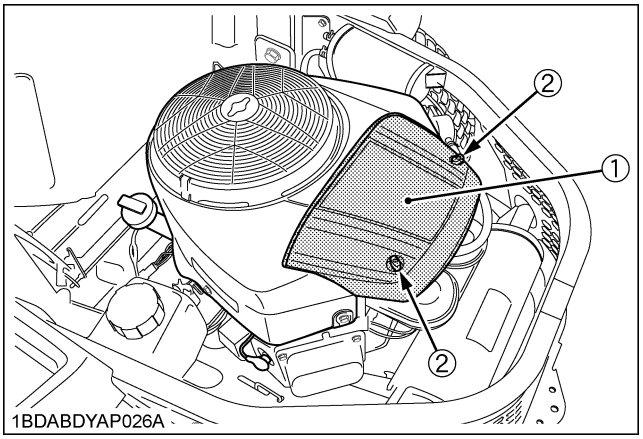

(1) Air cleaner cover
(2) Air cleaner cover knob

2. Remove air cleaner element with precleaner.

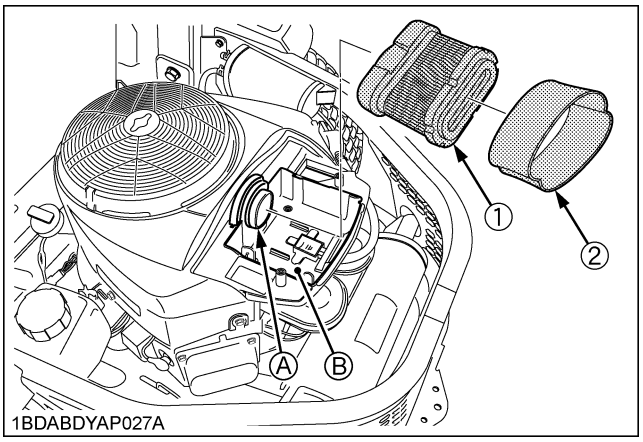

(1) Air cleaner element *(A) Air intake*
(2) Precleaner *(B) Base*

3. Remove the precleaner from the paper element.
4. Gently tap the paper element to dislodge dirt. **Do not wash the paper element or use pressurized air**, as this will damage the element. Replace a dirty, bent, or damaged element with a genuine part. Handle the new element carefully; do not use if the sealing surfaces are bent or damaged.
5. Clean the air cleaner base as required and check condition.
6. Reinstall the precleaner over the paper air cleaner element and install it on the base.

https://truckmanualshub.com/

7. Reinstall the air cleaner cover and secure it with 2 knobs.

NOTE :
- Operating the engine with loose or damaged air cleaner components could allow unfiltered air into the engine causing premature wear and failure.

[Z125E]
1. Loosen the air cleaner cover knobs and remove the air cleaner cover.

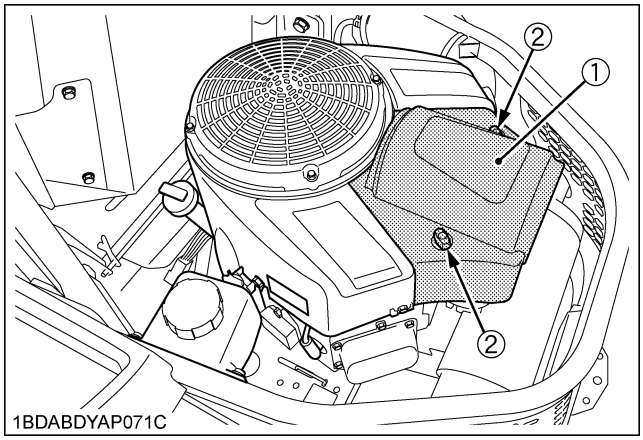

(1) Air cleaner cover
(2) Air cleaner cover knob

2. Open the latch and remove the air cleaner element.

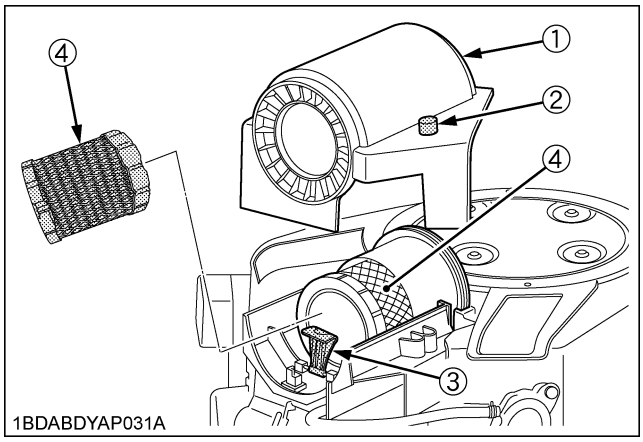

(1) Air cleaner cover
(2) Air cleaner cover knob
(3) Latch
(4) Air cleaner element

3. Gently tap the paper element to dislodge dirt. **Do not wash the paper element or use pressurized air**, as this will damage the element. Replace a dirty, bent, or damaged element with a genuine part. Handle the new element carefully; do not use if the sealing surfaces are bent or damaged.
4. Clean the air cleaner base as required and check condition.
5. Reinstall the air cleaner element and close the latch.
6. Reinstall the air cleaner cover and secure it with 2 knobs.

NOTE :
- Operating the engine with loose or damaged air cleaner components could allow unfiltered air into the engine causing premature wear and failure.

https://truckmanualshub.com/

EVERY 50 HOURS

■Checking Engine Start System

The Engine Start System in your machine are designed to protect you while operating. Please check these Engine Start System periodically - daily is best - to test function of the Engine Start System before operation.

WARNING

To avoid serious injury:

- **Do not allow anyone near the machine while testing.**
- **If the machine does not pass one of the following tests, do not operate the machine. See your local KUBOTA Dealer.**
- **Sit on operator's seat for all tests except for Test 1.**

IMPORTANT :

- Check the following tests before operating the machine.

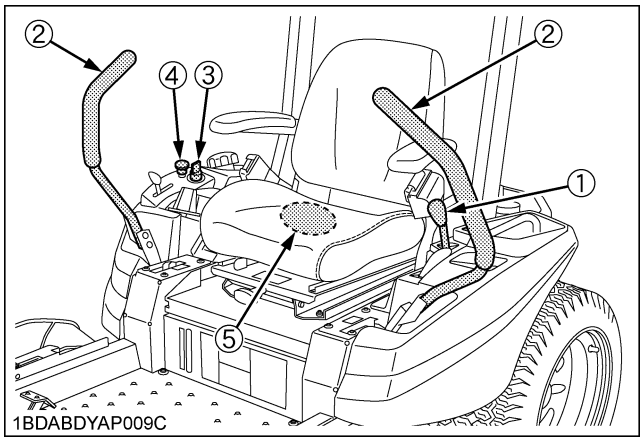

(1) Parking brake lever
(2) Motion control lever
(3) Key switch
(4) PTO switch
(5) Seat switch

Test 1 (OPERATOR NOT ON THE SEAT)

1. Securely set the parking brake.
2. Set the PTO switch to "DISENGAGE" (OFF) position.
3. Set the motion control levers to the "NEUTRAL LOCK" position.
4. Turn the key switch to "START" position.
5. The engine must not crank.

Test 2 (OPERATOR ON THE SEAT)

1. Do not set the parking brake. (release it from test 1)
2. Set the PTO switch to "DISENGAGE" (OFF) position.
3. Set the motion control levers to the "NEUTRAL LOCK" position.
4. Turn the key switch to "START" position.
5. The engine must not crank.

Test 3 (OPERATOR ON THE SEAT)

1. Securely set the parking brake.
2. Set the PTO switch to "DISENGAGE" (OFF) position.
3. Grasp the motion control levers and move them inward from the "NEUTRAL LOCK" position to the "NEUTRAL" position and then release the levers.
4. Turn the key switch to "START" position.
5. The engine must not crank.

Test 4 (OPERATOR ON THE SEAT)

1. Securely set the parking brake.
2. Set the PTO switch to "ENGAGE" (ON) position.
3. Set the motion control levers to the "NEUTRAL LOCK" position.
4. Turn the key switch to "START" position.
5. The engine must not crank.

NOTE :

- If the engine cranks in Test 1 through 4, consult your local KUBOTA Dealer to have the unit checked before operation.

Test 5 (OPERATOR ON THE SEAT)

1. Start the engine.
2. Keep the parking brake securely set.
3. Set the PTO switch to "DISENGAGE" (OFF) position.
4. Grasp the motion control levers and move them inward from "NEUTRAL LOCK" position to "NEUTRAL" position and then release the levers.
5. The engine must shut off.

NOTE :

- If the engine remains running in Test 5, consult your local KUBOTA Dealer to have the unit checked before operation.

https://truckmanualshub.com/

■Checking OPC System

The OPC (Operator Presence Control) system in your machine are designed to protect you while operating. Please check these OPC system periodically - daily is best - to test function of the OPC system before operation.

WARNING

To avoid serious injury:

- **Do not allow anyone near the machine while testing.**
- **If the machine does not pass one of the following tests, do not operate the machine. See your local KUBOTA Dealer.**

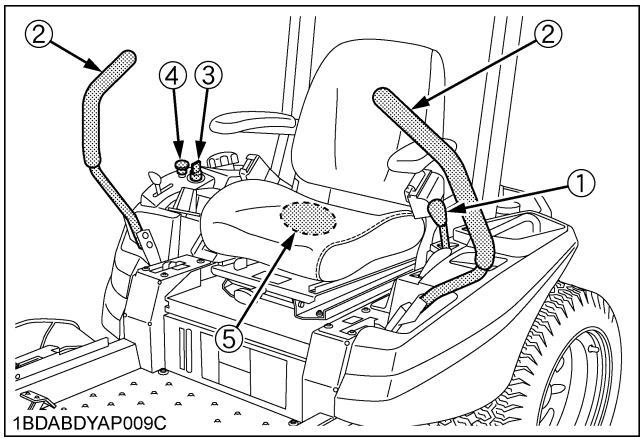

(1) Parking brake lever
(2) Motion control lever
(3) Key switch
(4) PTO switch
(5) Seat switch

Test 1 (OPERATOR ON THE SEAT)

1. Start the engine.
2. Do not set the parking brake.
3. Set the PTO switch to "DISENGAGE" (OFF) position.
4. Stand up. (Do not get off the machine.)
5. The engine must shut off.

Test 2 (OPERATOR ON THE SEAT)

1. Start the engine.
2. Do not set the parking brake.
3. Set the PTO switch to "ENGAGE" (ON) position.
4. Stand up. (Do not get off the machine.)
5. The engine must shut off.

NOTE :

- If the engine remains running in Test 1 through 2, consult your local KUBOTA Dealer to have the unit checked before operation.

■Checking Carbon Canister Air Filter

Check the carbon canister air filter every 50 hours of operation. (more often under extremely dusty or dirty conditions.)

WARNING

To avoid serious injury:

- **Always stop the engine, set the parking brake, remove the key, and disengage PTO.**

1. Remove the carbon canister air filter.

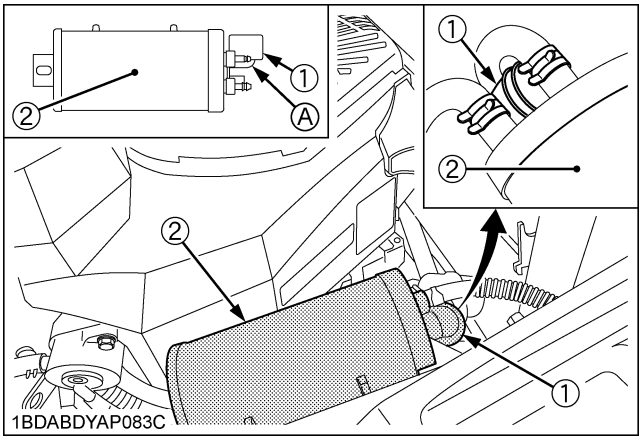

(1) Canister air filter *(A) Air port*
(2) Carbon canister

2. Check to see if the carbon canister air filter is worn out, damaged or dirty.
3. If the air filter is dirty, wash the air filter in warm water with detergent. Then rinse the air filter thoroughly until all traces of detergent are eliminated. Squeeze out excess water. (do not wring.) Allow the air filter to air dry. Do not use high pressure air to clean filter.
4. If the air filter is worn out, damaged or too dirty to wash clean, replace it with a new one.
5. Reinstall the carbon canister air filter.

NOTE :

- Operating in dusty condition may require more frequent maintenance than above.

https://truckmanualshub.com/

■Changing Engine Oil (Z122E, Z125E)

WARNING

To avoid serious injury:

- **Be sure to stop the engine and remove the key before changing the oil.**
- **Allow engine to cool down sufficiently; oil can be hot and may cause burns.**

1. To change the used oil, unhook the drain hose, direct the hose down and open the drain valve.

NOTE :

- The used oil can be drained out more easily if the engine is warm.

[Z122E, Z125E]

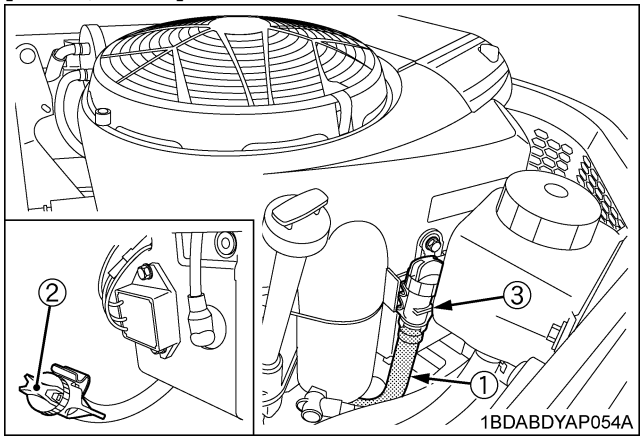

(1) Drain hose
(2) Drain valve
(3) Hook

2. Fill with the new oil up to the upper level on the dipstick.

[Z122E]

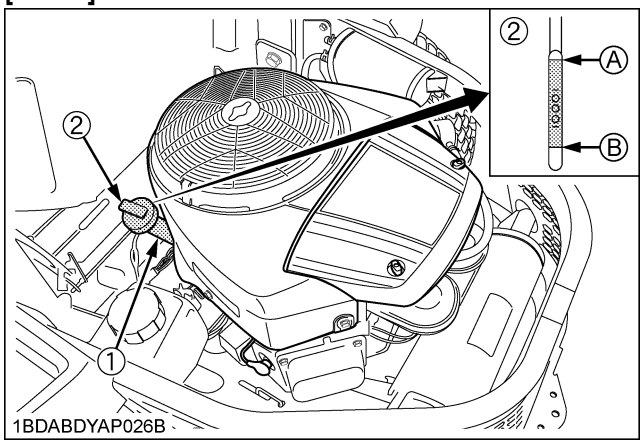

(1) Engine oil port *(A) "UPPER LEVEL"*
(2) Oil level dipstick *(B) "LOWER LEVEL"*

[Z125E]

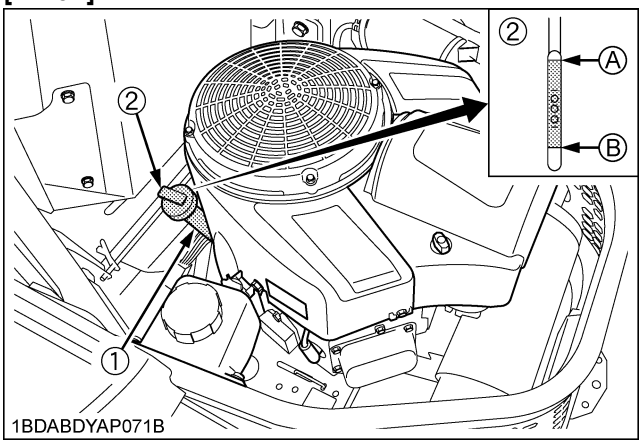

(1) Engine oil port *(A) "UPPER LEVEL"*
(2) Oil level dipstick *(B) "LOWER LEVEL"*

3. To check the oil level. Remove the dipstick, wipe it clean, insert it and draw it out again. Check to see that the oil level is between the 2 marks.

NOTE :

- Do not overfill.

https://truckmanualshub.com/

■Replacing Engine Oil Filter (Z122E, Z125E)

WARNING

To avoid serious injury:

- **Engine oil is a toxic substance. Dispose of used oil properly. Contact your local authorities for approved disposal methods or possible recycling.**

WARNING

To avoid serious injury:

- **Be sure to stop the engine and remove the key before changing the oil and the oil filter cartridge.**
- **Allow engine to cool down sufficiently; oil can be hot and may cause burns.**

The oil filter cartridge must be changed **every 50 service hours** or **annually**.
Always use a genuine oil filter.

1. The drain plug is located on the starter side of the oil pan. Clean the area around the oil drain plug and the oil fill cap/dipstick.
2. Remove the drain plug and the oil fill cap/dipstick.
3. Allow the oil to drain and then reinstall the drain plug.
4. Remove the old filter and wipe off the filter adapter with a clean cloth.
5. Place a new replacement filter in a shallow pan with the open end up. Pour new oil, of the proper type, in through the threaded center hole. Stop pouring when the oil reaches the bottom of the threads. Allow a minute or 2 for the oil to be absorbed by the filter material.
6. Apply a thin film of clean oil to the rubber gasket on the new oil filter.
7. Install the new oil filter to the filter adapter. Hand tighten the filter clockwise until the rubber gasket contacts the adapter, then tighten the filter an additional **1/2 to 3/4 turn**.
8. Fill the engine with the proper oil to the "FULL" or "F" mark on the dipstick. Always check the oil level with the dipstick before adding more oil.
9. Reinstall the oil fill cap/dipstick and tighten securely.
10. Start the engine and check for oil leaks. Recheck oil level before placing the engine into service.
    Stop the engine, correct any leaks, and allow a minute for the oil to drain down, then recheck the level on the dipstick.

NOTE :

- To prevent extensive engine wear or damage, always maintain the proper oil level in the crankcase. Never operate the engine with the oil level below the "ADD" or "L" mark or above the "FULL" or "F" mark on the dipstick.

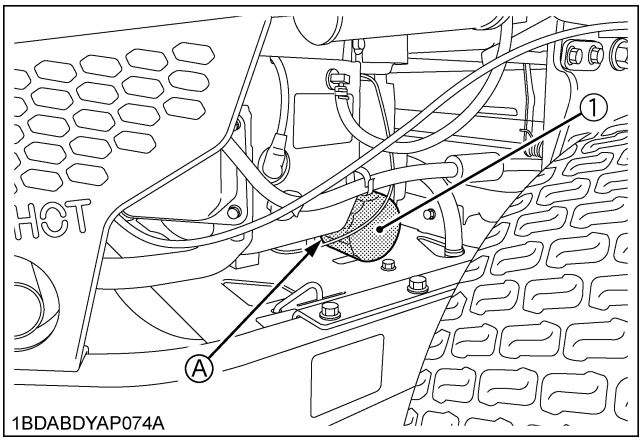

(1) Engine oil filter cartridge (A) "MOUNTING SURFACE"

https://truckmanualshub.com/

■Checking Muffler and Spark Arrester (if equipped)

WARNING

Running engines produce heat. Engine parts, especially muffler, become extremely hot.
Severe thermal burns can occur on contact.
Combustible debris, such as leaves, grass, brush, etc. can catch fire.
To avoid serious injury:

- **Allow muffler, engine cylinder and fins to cool before touching.**
- **Remove accumulated debris from muffler area and cylinder area.**
- **It is a violation of California Public Resource Code, Section 4442, to use or operate the engine on any forest-covered, brush-covered, or grass-covered land unless the exhaust system is equipped with a spark arrester, as defined in Section 4442, maintained in effective working order. Other states or federal jurisdictions may have similar laws. Contact the original equipment manufacturer, retailer, or dealer to obtain a spark arrester designed for the exhaust system installed on this engine.**
- **Replacement parts must be of the same design and installed in the same position as the original parts. Other parts may not perform as well, may damage the unit, and may result in injury.**

Remove accumulated debris from muffler area and cylinder area. Inspect the muffler for cracks, corrosion, or other damage. Remove the spark arrester, if equipped, and inspect for damage or carbon blockage. If damage is found, install replacement parts before operating.

EVERY 100 HOURS

■Changing Engine Oil (Z121S, Z125S)

WARNING

To avoid serious injury:

- **Be sure to stop the engine and remove the key before changing the oil.**
- **Allow engine to cool down sufficiently; oil can be hot and may cause burns.**

1. To change the used oil, remove the drain hose from the clamp, direct the hose down and remove the drain plug.

NOTE :

- The used oil can be drained out more easily if the engine is warm.

[Z121S, Z125S]

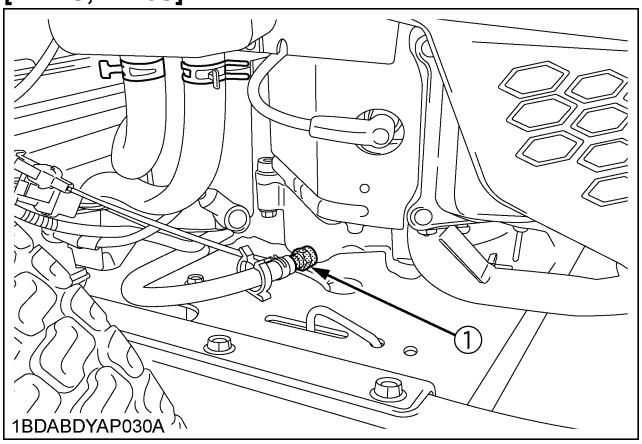

(1) Drain plug

2. Fill with the new oil up to the upper level on the dipstick.

[Z121S, Z125S]

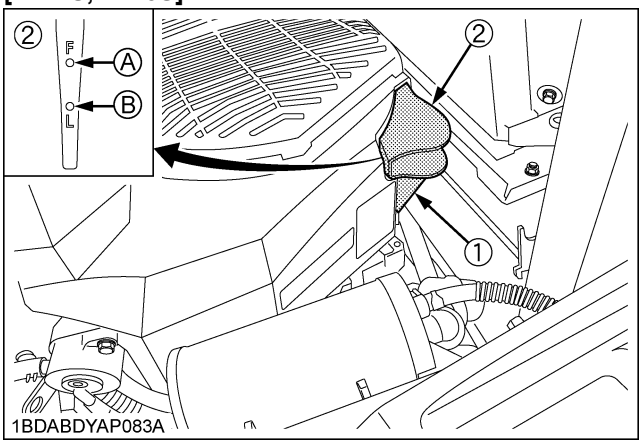

(1) Engine oil port
(2) Oil level dipstick
(A) "UPPER LEVEL"
(B) "LOWER LEVEL"

https://truckmanualshub.com/

3. To check the oil level. Remove the dipstick, wipe it clean, insert it and draw it out again. Check to see that the oil level is between the 2 marks.

NOTE :
- Do not overfill.

■Replacing Precleaner Element (Except Z125E)

(See "Cleaning Precleaner Element (Except Z125E)" in "EVERY 25 HOURS" in "PERIODIC SERVICE" section.)

■Replacing Air Cleaner Element (Z122E, Z125E)

(See "Cleaning Air Cleaner Element (Z122E, Z125E)" in "EVERY 25 HOURS" in "PERIODIC SERVICE" section.)

■Replacing Air Cleaner Element (Z121S, Z125S)

Every 100 hours of operation or **annually** replace the paper element.

[Z121S, Z125S]

1. Unlatch the cover and remove the air cleaner cover.
2. Remove the air cleaner element and precleaner.

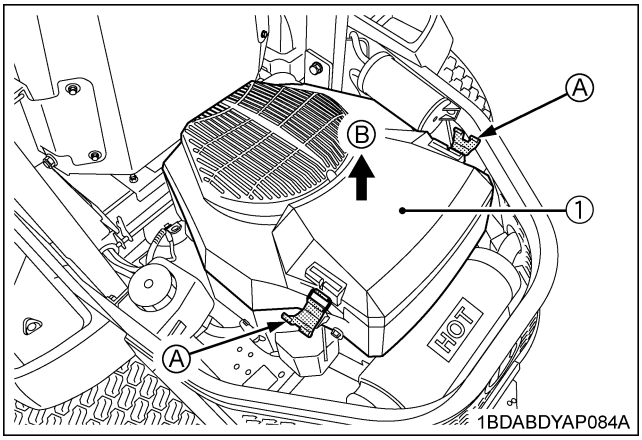

(1) Air cleaner cover
(A) "UNLATCH"
(B) "REMOVE"

3. Remove the precleaner from the paper element.

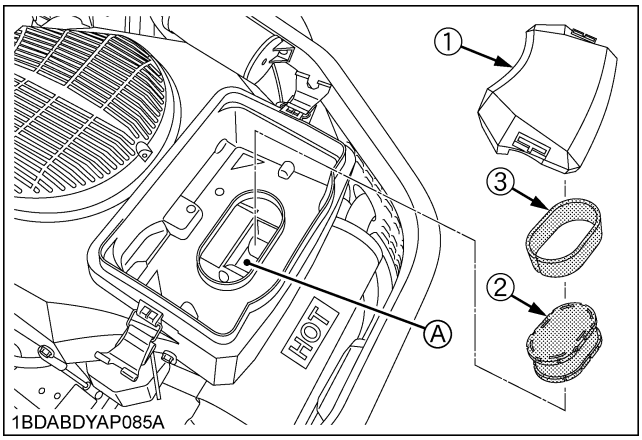

(1) Air cleaner cover
(2) Air cleaner element
(3) Precleaner
(A) Air intake

4. Replace a dirty, bent, or damaged element with a genuine part. Handle the new element carefully; do not use if the sealing surfaces are bent or damaged.
5. Clean the air cleaner base as required and check condition.
6. Reinstall the precleaner over the paper element and install in air intake.
7. Reinstall the air cleaner cover and secure with the 2 latches.

https://truckmanualshub.com/

NOTE :

- Operating the engine with loose or damaged air cleaner components could allow unfiltered air into the engine causing premature wear and failure.

■Cleaning Engine Shroud

WARNING

To avoid serious injury:

- **Make sure engine is cool to the touch before removing shrouds.**

1. Remove the engine shroud mounting bolts and detach the shroud.
2. Check to see if the engine's cooling fins are blocked with dust and dirt. Clean them with compressed air if required.

WARNING

To avoid serious injury:

- **Always shield eyes and face from air deposits and objects.**

[Z122E]

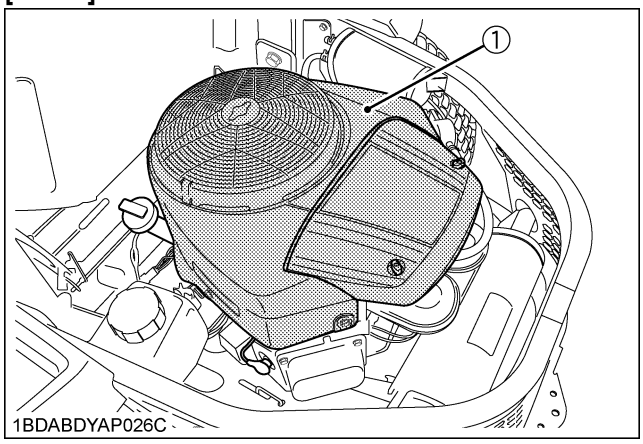

(1) Shroud

[Z125E]

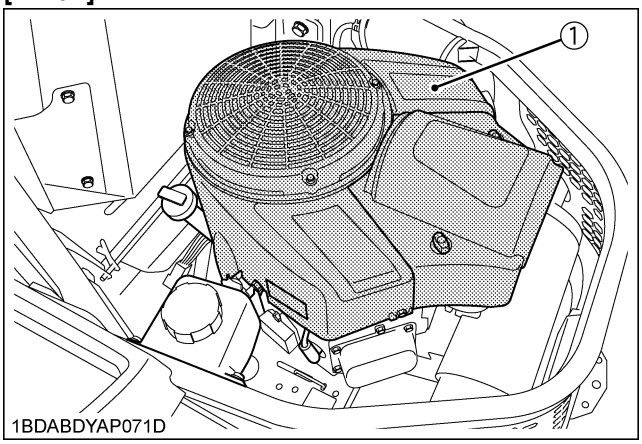

(1) Shroud

[Z121S, Z125S]

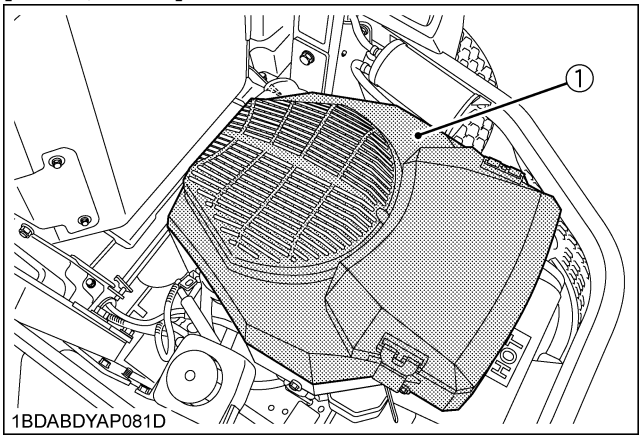

(1) Shroud

https://truckmanualshub.com/

■Checking Spark Plug

Every 100 hours of operation check the spark plug condition and gap. Annually replace the spark plug.

1. Remove the spark plug wire from spark plug.
2. Use a spark plug wrench to remove plug.

NOTE :
- This engine is equipped with resistor-type spark plug.

3. Inspect spark plug for cracked porcelain, pitted electrodes, or other wear and damage. Replace spark plug if necessary.

[Z122E]

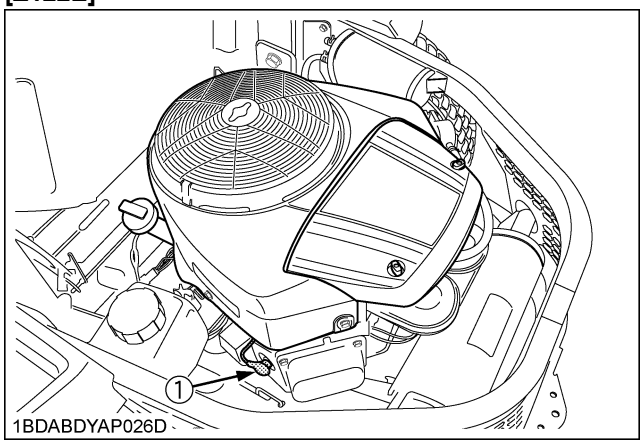

(1) Spark plug (both sides)

[Z125E]

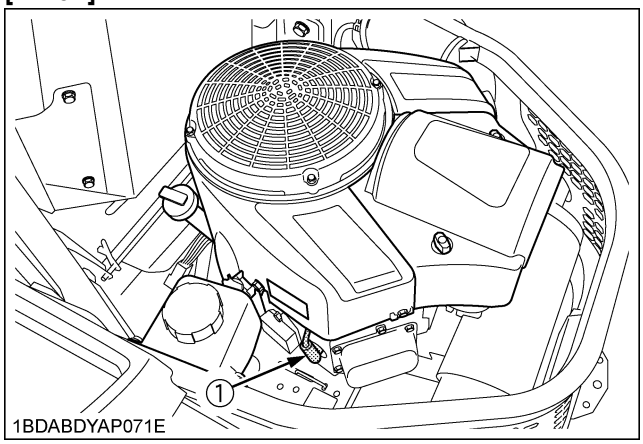

(1) Spark plug (both sides)

[Z121S, Z125S]

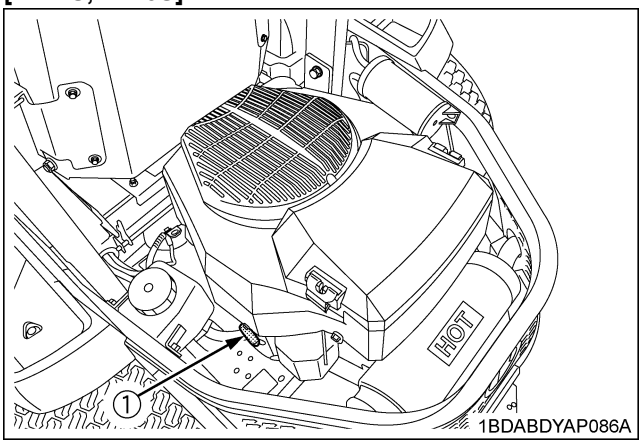

(1) Spark plug (both sides)

4. Check spark plug gap with gap gauge.

Recommended spark plug	CHAMPION XC12YC

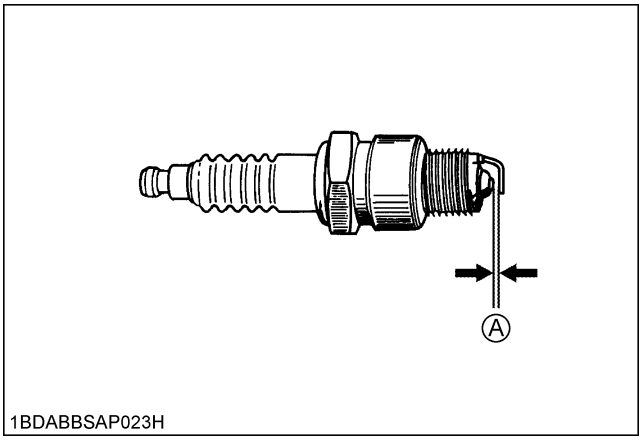

(A) 0.76 mm (0.03 in.)

https://truckmanualshub.com/

■Checking Fuel Lines

WARNING

To avoid serious injury:

- **Be sure to stop the engine and remove the key when attempting to make the following checks and changes.**
- **Never fail to check the fuel lines periodically. The fuel lines are subject to wear and aging. Fuel may leak out onto the running engine, causing a fire.**

The fuel line connections should be checked **annually** or **every 100 hours of operation**, whichever occurs first.

1. The fuel line is made of rubber and ages regardless of service period.
2. If the fuel line, clamps and fuel filter are found damaged or deteriorated, replace them.

IMPORTANT :

- When the fuel line is disconnected for maintenance or repair, close both ends of the fuel line with a piece of clean cloth or paper to prevent dust and dirt from entering. In addition, particular care must be taken not to admit dust and dirt into the fuel pump. Entrance of dust and dirt causes malfunction of the fuel pump.

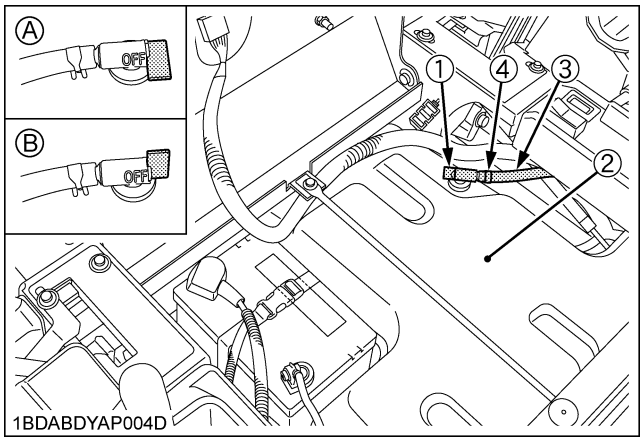

(1) Fuel valve
(2) Fuel tank
(3) Fuel line
(4) Pipe clamp
(A) "CLOSE" (OFF)
(B) "OPEN"

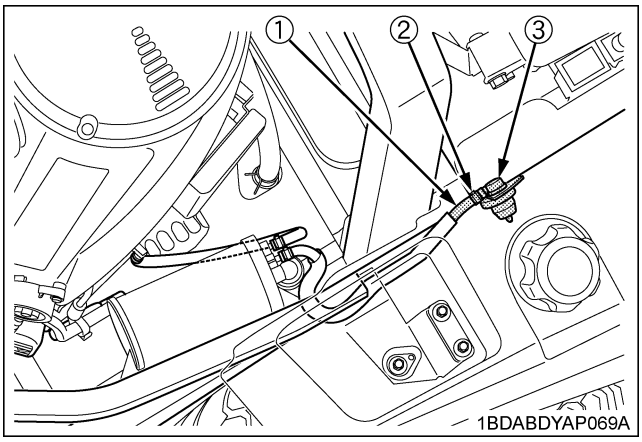

(1) Fuel line
(2) Pipe clamp
(3) 2 way valve (assembled in the fuel tank)

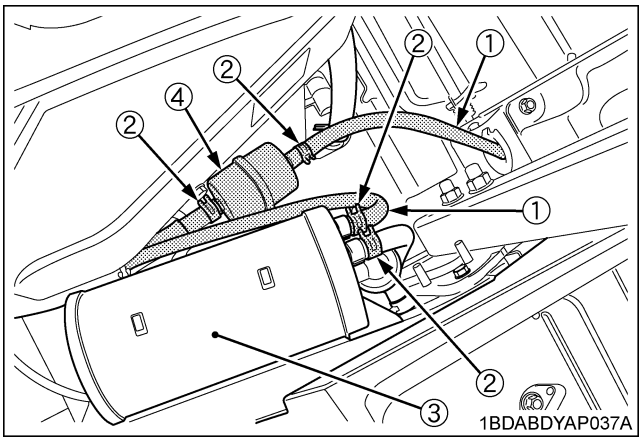

(1) Fuel line
(2) Pipe clamp
(3) Carbon canister
(4) Fuel filter

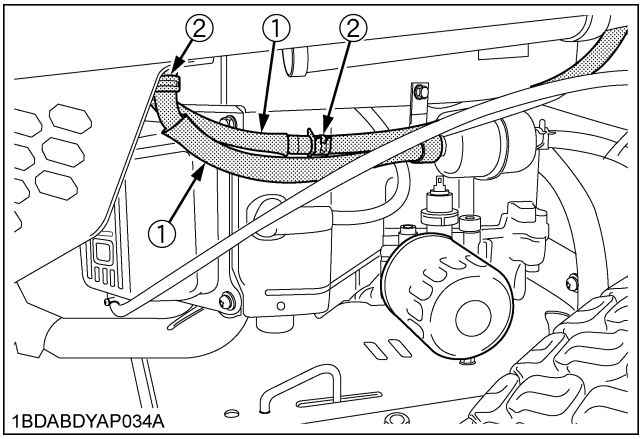

(1) Fuel line
(2) Pipe clamp

https://truckmanualshub.com/

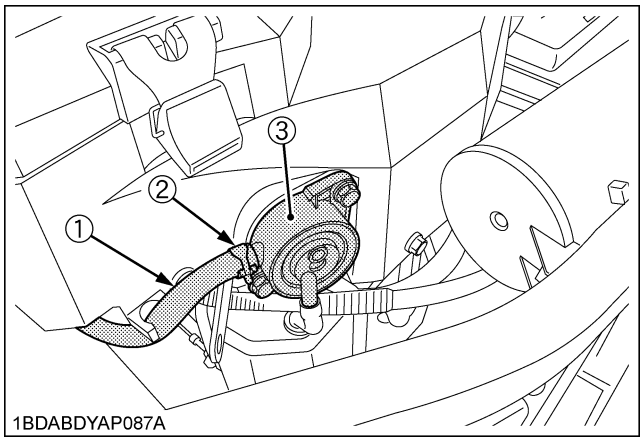

(1) Fuel line
(2) Pipe clamp
(3) Fuel pump

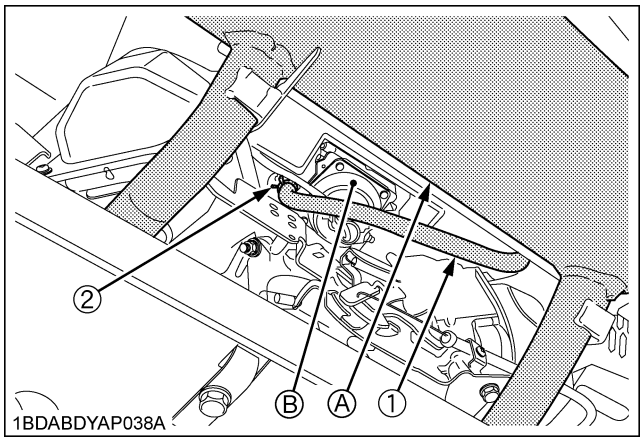

(1) Fuel line
(2) Pipe clamp
(A) Muffler
(B) Carburetor

■Battery Condition

DANGER

To avoid the possibility of battery explosion:
For the refillable type battery, follow the instructions below.

- **Do not use or charge the refillable type battery if the fluid level is below the LOWER (lower limit level) mark. Otherwise, the battery component parts may prematurely deteriorate, which may shorten the battery's service life or cause an explosion. Check the fluid level regularly and add distilled water as required so that the fluid level is between the UPPER and LOWER levels.**

DANGER

To avoid serious injury or death:

- **When the battery is being activated, hydrogen and oxygen gases in the battery are extremely explosive. Keep open sparks and flames away from the battery at all times, especially when charging the battery.**

WARNING

To avoid serious injury:

- **Batteries, battery posts, terminals and related accessories contain lead and lead compounds, and other chemicals known to the State of California to cause cancer and birth defects or other reproductive harm. WASH HANDS AFTER HANDLING.**
- **Never remove the battery cap while the engine is running.**
- **Keep electrolyte away from eyes, hands and clothes. If you are spattered with it, wash it away completely with water immediately and get medical attention.**
- **Keep open sparks and flames away from the battery at all times. Hydrogen gas mixed with oxygen becomes very explosive.**
- **Wear eye protection and rubber gloves when working around battery.**

The factory-installed battery is of non-refillable type.
If the battery is weak, charge the battery or replace it with new one.

https://truckmanualshub.com/

IMPORTANT :

- Mishandling the battery shortens the service life and adds to maintenance costs.
  The original battery is maintenance free, but needs some servicing.
  If the battery is weak, the engine will be difficult to start and the lights will be dim. It is important to check the battery periodically.
- When exchanging an old battery for new one, use battery of equal specification in table below.

Battery Type	Volts (V)	Reserve Capacity (min)	Cold Cranking Amps	Normal Charging Rate(A)
U1-300	12	45	300	6.5

(For non-accessible maintenance-free type batteries.)
Maintenance-free, non-accessible batteries are designed to eliminate the need to add water. Yet the volume of electrolyte above plates may eventually become depleted due to abnormal conditions such as high heat or improper regulator setting. Use a voltmeter to check the state of charge. (See reference chart below to determine if charging is necessary.)

Battery voltage	Reference state of charge
12.6	100%(Full charge)
12.4	75%
12.2	50%
12.0	25%
11.8	0%

◆ **Battery Charging**

DANGER

To avoid serious injury or death:

- **When the battery is being activated, hydrogen and oxygen gases in the battery are extremely explosive. Keep open sparks and flames away from the battery at all times, especially when charging the battery.**

WARNING

To avoid serious injury:

- **When disconnecting the cable from the battery, start with the negative terminal first. When connecting the cable to the battery, start with the positive terminal first.**
- **Never check battery charge by placing a metal object across the posts.**
  Use a voltmeter or hydrometer.

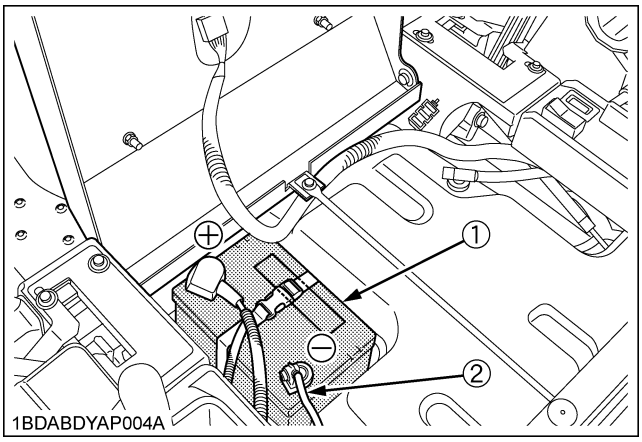

(1) Battery *(+): Positive terminal*
(2) Ground cable *(-): Negative terminal*

1. To slow charge the battery, connect the battery positive terminal to the charger positive terminal and the negative to the negative, then charge for at least 1 hour at 6.5 amperes.
2. A boost charge is only for emergencies. It will partially charge the battery at a high rate and in a short time.
   When using a boost-charged battery, it is necessary to recharge the battery as early as possible.
   Failure to do this will shorten the battery's service life.
3. When the specific gravity of electrolyte is between 1.27 and 1.29 the charging is completed.

◆ **Battery for storage**

1. When storing the machine for a long period, remove the battery from machine, adjust the electrolyte to the proper level and store in a dry place out of direct sunlight.
2. The battery self-discharges while it is stored.
   Recharge it once every 3 months in hot seasons and once every 6 months in cold seasons.

https://truckmanualshub.com/

■Adjusting Throttle Cable

[Z122E, Z125E]

1. Move the throttle lever to the "FAST" position.

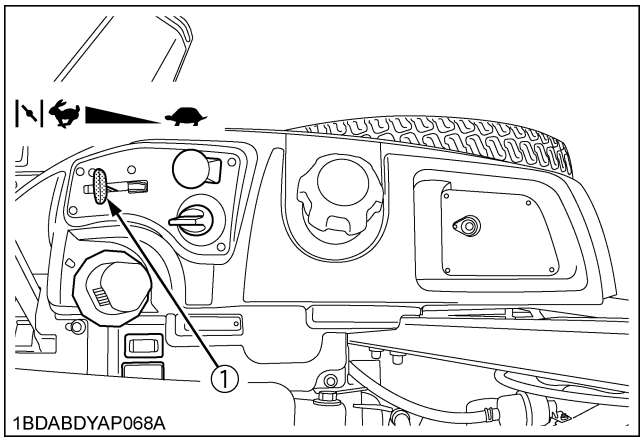

(1) Throttle lever

2. Attempt to pass a pin (A) with a diameter of 3 mm through the holes indicated.

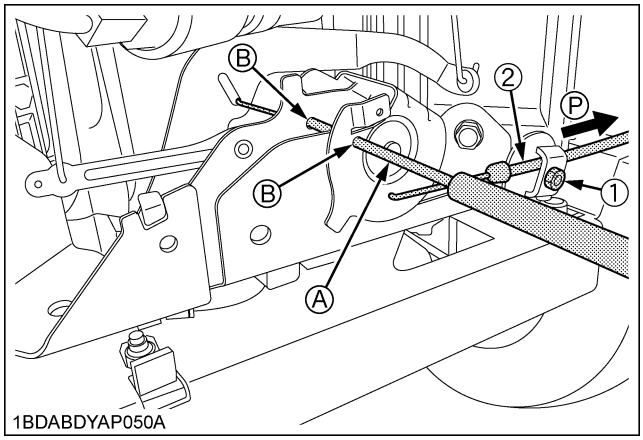

(1) Bolt
(2) Throttle lever cable sheath
(A) Pin with a diameter of 3 mm
(B) Hole
(P) "PULL"

3. If not possible, loosen the bolt (1) and pull the throttle lever cable sheath (2) in the direction of the arrow so that the pin (A) passes through all the required holes (B). And then tighten the bolt (1).

[Z121S, Z125S]

1. Move the throttle lever to the "FAST" position.

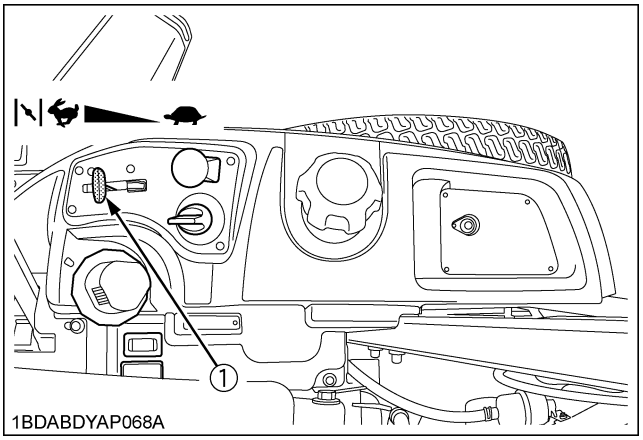

(1) Throttle lever

2. Make sure the throttle arm (A) contacts the choke arm (B).

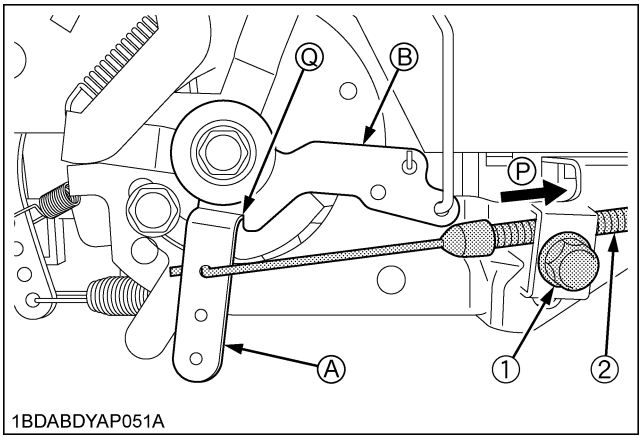

(1) Bolt
(2) Throttle lever cable sheath
(A) Throttle arm
(B) Choke arm
(P) "PULL"
(Q) "CONTACT"

3. If not possible, loosen the bolt (1) and pull the throttle lever cable sheath (2) in the direction of the arrow until throttle arm (A) contact the choke arm (B). And then tighten the bolt (1).

https://truckmanualshub.com/

■Replacing Engine Oil Filter (Z121S, Z125S)

WARNING

To avoid serious injury:

- **Engine oil is a toxic substance. Dispose of used oil properly. Contact your local authorities for approved disposal methods or possible recycling.**

WARNING

To avoid serious injury:

- **Be sure to stop the engine and remove the key before changing the oil and the oil filter cartridge.**
- **Allow engine to cool down sufficiently; oil can be hot and may cause burns.**

The oil filter cartridge must be changed **every 100 service hours**.
Always use a genuine oil filter.

1. The drain plug is located on the starter side of the oil pan. Clean the area around the oil drain plug and the oil fill cap/dipstick.
2. Remove the drain plug and the oil fill cap/dipstick.
3. Allow the oil to drain and then reinstall the drain plug.
4. Remove the old filter and wipe off the filter adapter with a clean cloth.
5. Place a new replacement filter in a shallow pan with the open end up. Pour new oil, of the proper type, in through the threaded center hole. Stop pouring when the oil reaches the bottom of the threads. Allow a minute or 2 for the oil to be absorbed by the filter material.
6. Apply a thin film of clean oil to the rubber gasket on the new oil filter.
7. Install the new oil filter to the filter adapter. Hand tighten the filter clockwise until the rubber gasket contacts the adapter, then tighten the filter an additional **3/4 to 1 turn**.
8. Fill the engine with the proper oil to the "FULL" or "F" mark on the dipstick. Always check the oil level with the dipstick before adding more oil.
9. Reinstall the oil fill cap/dipstick and tighten securely.
10. Start the engine and check for oil leaks. Recheck oil level before placing the engine into service.
    Stop the engine, correct any leaks, and allow a minute for the oil to drain down, then recheck the level on the dipstick.

NOTE :

- To prevent extensive engine wear or damage, always maintain the proper oil level in the crankcase. Never operate the engine with the oil level below the "ADD" or "L" mark or above the "FULL" or "F" mark on the dipstick.

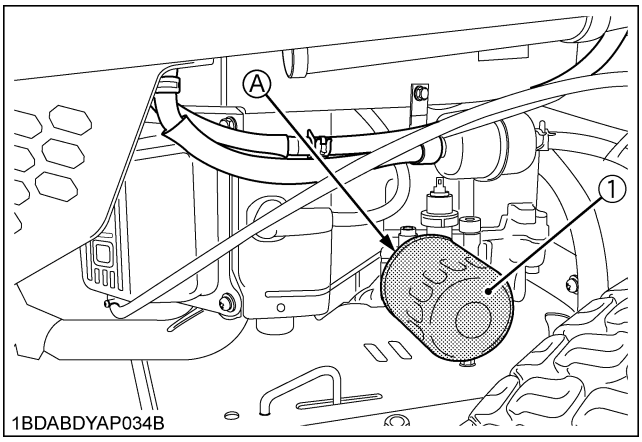

(1) Engine oil filter cartridge (A) "MOUNTING SURFACE"

https://truckmanualshub.com/

EVERY 200 HOURS

■Checking Hydraulic Hose

WARNING

To avoid serious injury:

- **Be sure to stop the engine, remove the key, and relieve pressure before checking and replacing the hydraulic hose.**
- **Allow the transmission case to cool down sufficiently; oil can be hot and may cause burns.**

Check to see if hydraulic hoses are properly fixed every 200 hours of operation.

1. Check to see that all lines and hose clamps are tight and not damaged.
2. If hoses and clamps are found worn or damaged, replace or repair them at once.

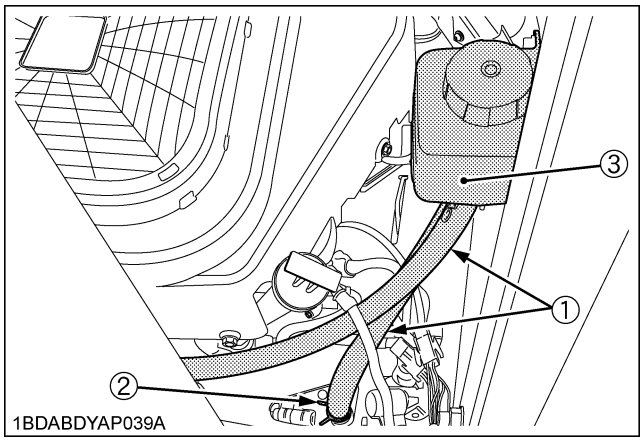

(1) Hydraulic hose
(2) Hose clamp
(3) Transaxle fluid tank

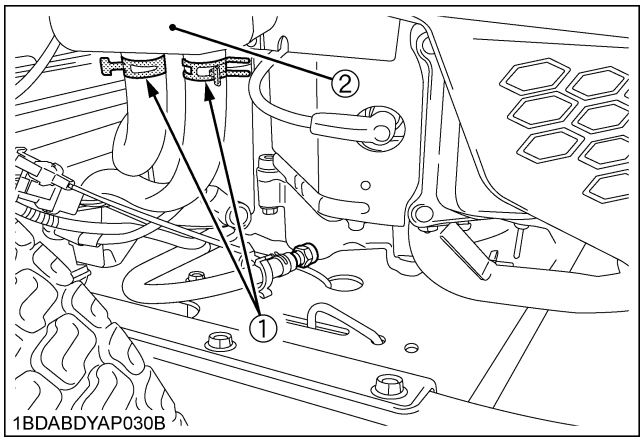

(1) Hose clamp
(2) Transaxle fluid tank

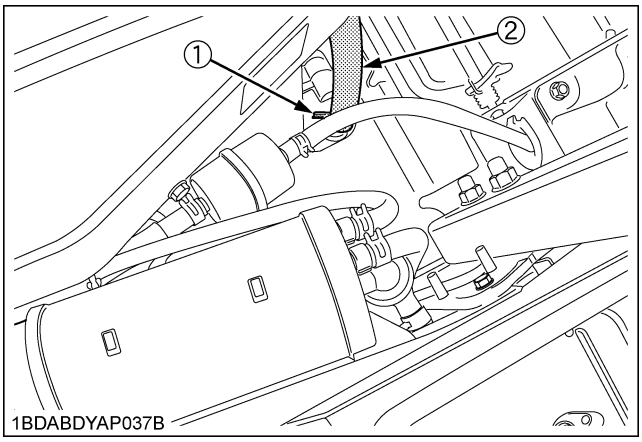

(1) Hose clamp
(2) Hydraulic hose

https://truckmanualshub.com/

EVERY 400 HOURS

■Replacing Transaxle Oil Filter Cartridge

WARNING

To avoid serious injury:

- **Park the machine on a firm and level surface.**
- **Apply the parking brake.**
- **Be sure to stop the engine and remove the key before changing or checking the oil.**
- **Allow transmission case to cool down sufficiently; oil can be hot and may cause burns.**

1. Apply the bypass valve.
   (See "Hydrostatic Transaxle Bypass Rods" in "TRANSPORTING" in "OPERATING THE MACHINE" section.)
2. Remove the hex head bolts (4), and filter guard (3). Clean any loose debris from around the perimeter of the oil filter (2).
3. Place an oil drain pan (12" or more diameter and 8 qt. capacity is optimal) beneath the oil filter. Remove the oil filter (2) and discard it.

NOTE :

- Always replace the filter when preforming any internal maintenance to the transaxle.

4. After the oil has drained, inspect all parts for excessive wear or damage. Replace if necessary.
5. Wipe the filter base surface off and apply a film of new oil to the gasket of the new replacement filter (Hydro-Gear part number 52114).
6. Install the new filter by hand, turn 3/4 to 1 full turn after the filter gasket contacts the filter base surface.

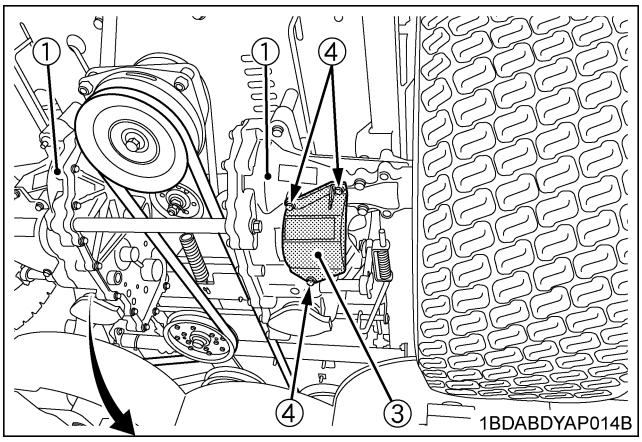

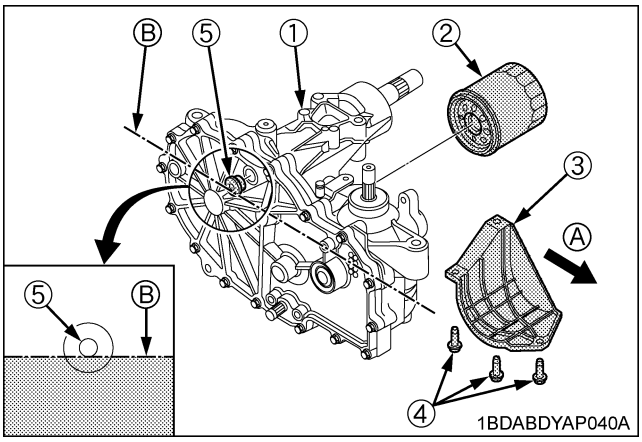

(1) Transaxle
(2) Transaxle oil filter
(3) Filter guard
(4) Hex flange head bolt
(5) Breather port plug
(A) FRONT
(B) OIL LEVEL

7. Re-install the filter guard (3) with 3 hex head bolts (4). Torque bolts (4) to 7.35 N-m (5.42 lbf-ft) securely.
8. Repeat steps 2-7 on the opposite side transaxle drive.
9. Drain old oil filters of all free flowing oil prior to disposal. Place used oil in appropriate containers and deliver to an approved recycling collection facility.
10. Remove the breather port plug (9) from the left side and right side transaxles prior to filling with oil. This will allow the transaxles to vent during oil fill.
11. Remove the cap from the transaxle fluid tank located on the machine frame.
12. Fill with 20W-50 motor oil until oil just appears at the bottom of the breather port. Install the breather port plug (5) into transaxle. Torque the plug (5) to 20.34 N-m (15.0 lbf-ft).
13. Continue to fill the transaxles through the transaxle fluid tank until the "Full Cold" line is reached on the transaxle fluid tank.
14. Re-install the transaxle fluid tank cap by hand. Be careful to not overtighten.
15. Proceed to the purge procedure.

https://truckmanualshub.com/

◆ **Purging Procedures**

Due to the effects air has on efficiency in hydrostatic drive applications, it is critical that it is purged from the system.

Air creates inefficiency because its compression and expansion rate is higher than that of the oil approved for use in hydrostatic drive systems.

These purge procedures should be implemented any time a hydrostatic system has been opened to facilitate maintenance or the oil has been changed.

The resulting symptoms in hydrostatic systems may be:
1. Noisy operation.
2. Lack of power or drive after short term operation.
3. High operation temperature and excessive expansion of oil.

Before starting, make sure the transaxle is at the proper oil level. If it is not, fill to the specifications outlined in this manual.

The following procedures are best performed with the machine drive wheels off the ground. Then repeated under normal operating conditions. If this is not possible, then the procedure should be performed in an open area free of any objects or bystanders.
1. Disengage the brake if activated.
2. With the bypass valve open and the engine running, slowly move the motion control levers in both forward and reverse directions (5 or 6 times).
3. With the bypass valve closed and the engine running, slowly move the motion control levers in both forward and reverse directions (5 to 6 times). Check the oil level, and add oil as required after stopping the engine.
4. It may be necessary to repeat Steps 2 and 3 until all the air is completely purged from the system. When the transaxle operates at normal noise levels and moves smoothly forward and reverse at normal speeds, then the transaxle is considered purged.

■Changing Transaxle Fluid

(See "Replacing Transaxle Oil Filter Cartridge" in "EVERY 400 HOURS" in "PERIODIC SERVICE" section.)

EVERY 500 HOURS

■Electric Clutch Adjustment

The electric clutch serves 2 functions in the operation of the mower. In addition to starting and stopping the power flow to the cutter blades, the clutch also acts as a brake to assist in stopping blade rotation when the PTO is switched off or the operator presence control is interrupted.

When the clutch is disengaged, the air gap between the armature and rotor must be adjusted to 0.4 mm (0.015 in.) for proper operation. The air gap adjustment is made at 3 bolts on the clutch. There are 3 inspection windows, one next to each adjusting bolt. (See the figure below.)

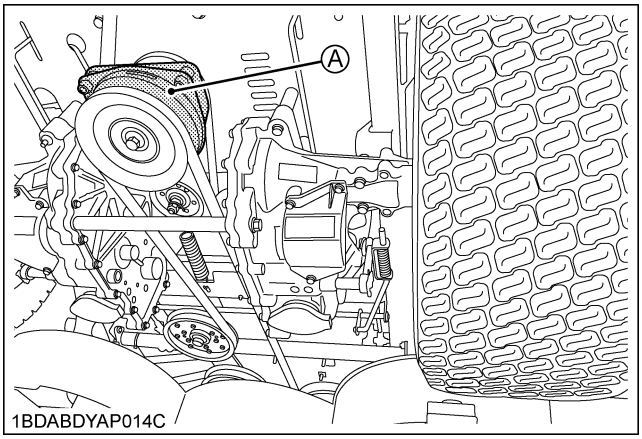

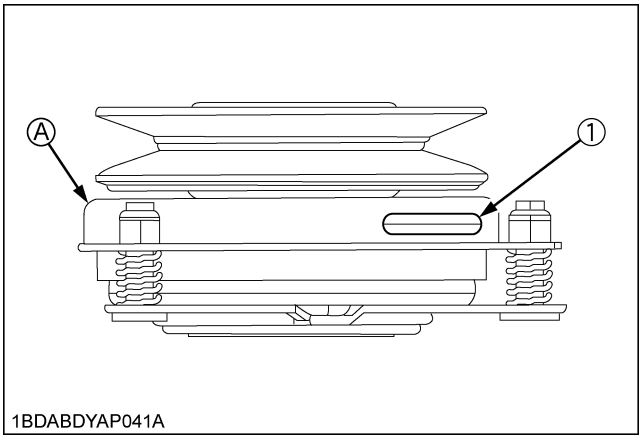

(1) Inspection window (x3) *(A) Electric clutch*

1. Locate the inspection windows on the clutch.
2. Place a 0.4 mm (0.015 in.) feeler gauge in the slot between the rotor and the armature. (See the figure.)

https://truckmanualshub.com/

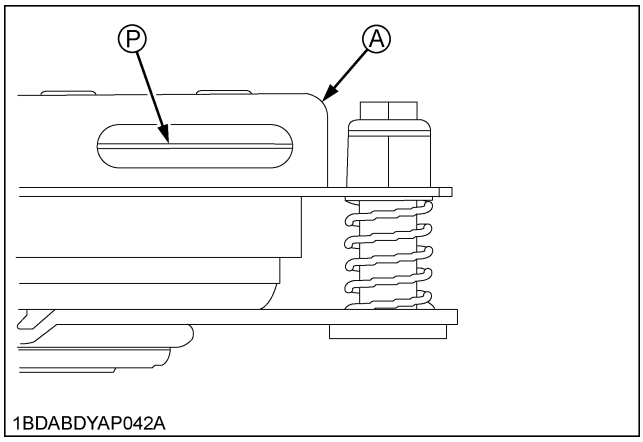

(A) Electric clutch
(P) "INSERT 0.4 mm (0.015 in.) FEELER GAUGE HERE"

3. Tighten or loosen the adjusting nut as needed to achieve the 0.4 mm (0.015 in.) air gap. (See the figure.) Perform this operation at all 3 inspection windows.

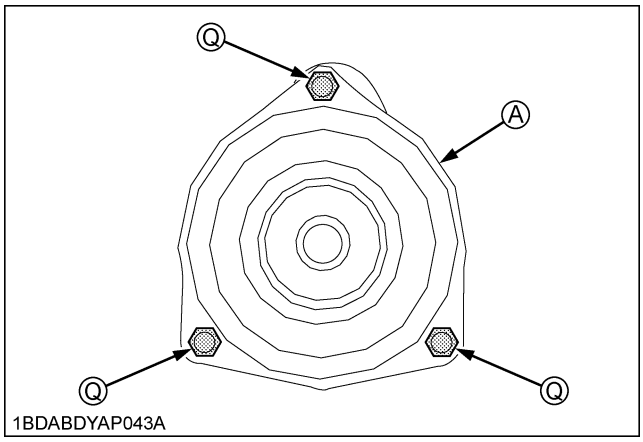

(A) Electric clutch
(Q) Adjustment nut

This adjustment should be done every 500 hours of operation or annually, whichever comes first. In cases where the machine is heavily used, air gap settings should be checked more often.

If the air gap is too narrow, the clutch armature may drag when disengaged, resulting in premature failure.

■Checking Engine Valve Clearance (Z121S, Z125S)

Consult your local KUBOTA Dealer for this service.

EVERY AFTER 500 HOURS

■Cleaning Combustion Chamber

If you do not have the proper tools and/or are not mechanically proficient, consult your local KUBOTA Dealer for this service.

EVERY 1 YEAR

■Replacing Precleaner Element (Except Z125E)

(See "Cleaning Precleaner Element (Except Z125E)" in "EVERY 25 HOURS" in "PERIODIC SERVICE" section.)

■Replacing Air Cleaner Element (Z122E, Z125E)

(See "Cleaning Air Cleaner Element (Z122E, Z125E)" in "EVERY 25 HOURS" in "PERIODIC SERVICE" section.)

■Replacing Air Cleaner Element (Z121S, Z125S)

(See "Replacing Air Cleaner Element (Z121S, Z125S)" in "EVERY 100 HOURS" in "PERIODIC SERVICE" section.)

■Changing Engine Oil (Z122E, Z125E)

(See "Changing Engine Oil (Z122E, Z125E)" in "EVERY 50 HOURS" in "PERIODIC SERVICE" section.)

■Replacing Engine Oil Filter (Z122E, Z125E)

(See "Replacing Engine Oil Filter (Z122E, Z125E)" in "EVERY 50 HOURS" in "PERIODIC SERVICE" section.)

■Replacing Fuel Filter (Z122E, Z125E)

(See "Checking Fuel Lines" in "EVERY 100 HOURS" in "PERIODIC SERVICE" section.)

■Checking Muffler and Spark Arrester (if equipped)

(See "Checking Muffler and Spark Arrester (if equipped)" in "EVERY 50 HOURS" in "PERIODIC SERVICE" section.)

■Replacing Spark Plug

(See "Checking Spark Plug" in "EVERY 100 HOURS" in "PERIODIC SERVICE" section.)

■Checking Engine Valve Clearance (Z122E, Z125E)

Consult your local KUBOTA Dealer for this service.

https://truckmanualshub.com/

EVERY 2 YEARS

■Replacing Hydraulic Hose

Consult your local KUBOTA Dealer for this service.

■Replacing Fuel Lines

Consult your local KUBOTA Dealer for this service.

■Replacing Engine Breather Hose

Consult your local KUBOTA Dealer for this service.

■Replacing Carbon Canister Air Filter

(See "Checking Carbon Canister Air Filter" in "EVERY 50 HOURS" in "PERIODIC SERVICE" section.)

SERVICE AS REQUIRED

■Replacing Fuses

Replacement of the fuse

1. Raise the operator's seat.
2. Remove the blown fuse.
3. Place a new fuse of the same capacity in position.

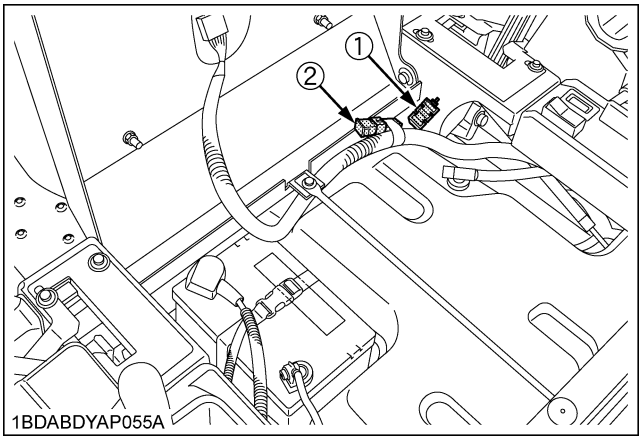

(1) Fuse location
(2) Slow blow fuse

IMPORTANT :

- If the new fuse happens to blow out within a short time, contact your dealer for inspection and repair. Never "jump" the fuse with wire or foil, or install a larger capacity fuse than is recommended.

◆ **Protected circuit**

FUSE NO.	CAPACITY (A)	Protected circuit
(1)	5	Start
	5	Operator control
	10	PTO clutch
	15	Accessories
	-	-
	-	-
(2)	Slow blow fuse 30	Check circuit against wrong battery connection

https://truckmanualshub.com/

■Checking and Replacing Blade

WARNING

To avoid serious injury:

- **Be sure to stop the engine and remove the key.**
- **Blades may be sharp. When you handle blades, wear heavy gloves or wrap end of blade with a rag.**

◆ Checking

The blade cutting edges should be kept sharp at all times. Sharpen the cutting edges, if they resemble blade (B). Replace the blades if they appear similar to blade (C).

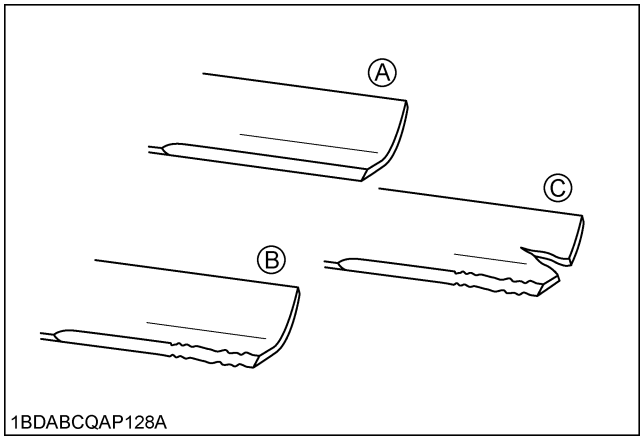

(A) New blade
(B) Worn blade
(C) Cracked blade

◆ Replacing

1. Dismount the mower deck from the machine.
   (See "DISMOUNTING THE MOWER DECK" in "MOWER MOUNTING" section.)
   Then turn it over to expose the blades.
2. Wedge a block of wood between the blade and mower housing or use a box wrench over the pulley nut to prevent the spindle from rotating while removing the blade bolts; loosen the blade bolt as illustrated.

IMPORTANT :

- Use the proper metric size box or socket wrench to tighten or loosen the blade mounting bolt.

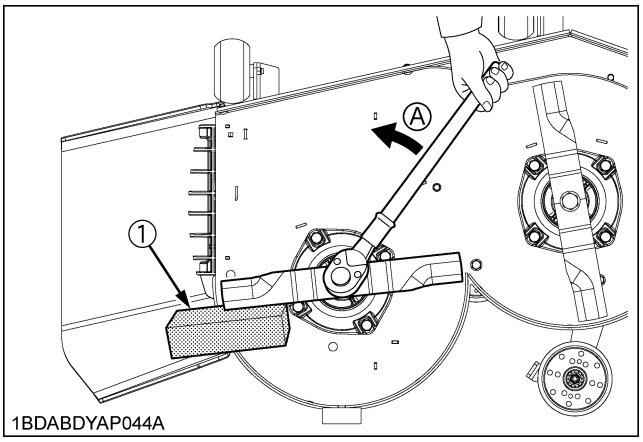

(1) Block *(A) "LOOSEN"*

3. To sharpen the blades yourself, clamp the blade securely in a vise.
   Use a large mill file and file along the original bevel until sharp.
4. To check the blade for balance, place a small rod through the center hole. If the blade is not balanced, file the heavy side of the blade until balance is achieved.
5. To attach blades, be sure to install the cup washer between the blade and bolt head. Then tighten the bolt securely.
6. Before checking or replacing the blade, wipe grass and mud off the top and inside of the mower. Especially clean up the inside of the belt cover, because otherwise the belt life will be reduced.

[RCK48P, RCK54P]

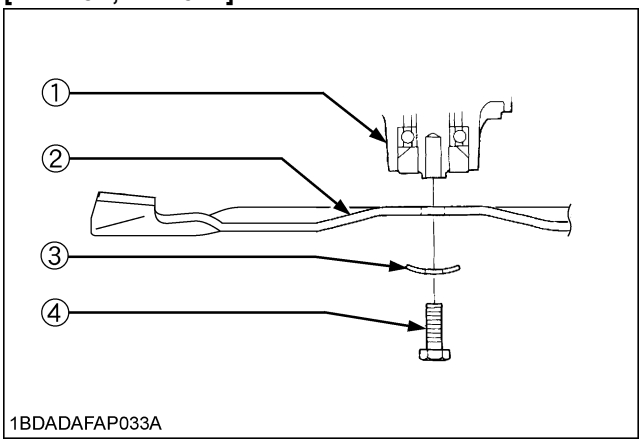

(1) Spindle holder
(2) Blade
(3) Cup washer
(4) Bolt

IMPORTANT :

- Tighten the bolts of the outer blades from 103 to 118 N-m (76 to 87 lbf-ft) of torque.
- The blade bolts have Right hand threads. Turn them counterclockwise to loosen.

https://truckmanualshub.com/

- To prolong the service life of the blades, reposition them as shown in the figure below periodically.

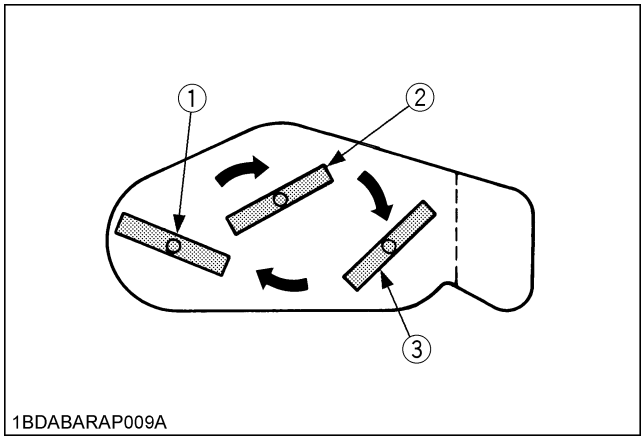

(1) LH blade
(2) Center blade
(3) RH blade

■Mower Belt Replacement

1. Remove the mower deck from the machine according to the procedure "DISMOUNTING THE MOWER DECK".
2. Remove the left and right hand shield from the mower deck.
3. Remove the tension pulley, and remove the belt.
4. To install a new belt, reverse the above procedure.

NOTE :
- Tighten the tension pulley bolt securely 77.6 to 90.2 N-m (8.0 to 9.2 kgf-m, 57.1 to 66.5 lbf-ft).

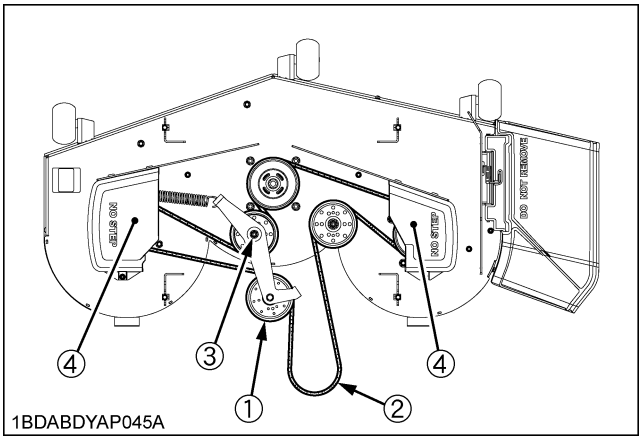

(1) Tension pulley
(2) Belt
(3) Bolt
(4) Shield

https://truckmanualshub.com/

ADJUSTMENT

MOTION CONTROL LEVER

WARNING

To avoid serious injury:

- **Park the machine on a firm and level surface.**
- **If it is necessary to run the engine in an enclosed area, use a gas tight exhaust pipe extension to remove the fumes.**
- **Always try to work in a well-ventilated area.**
- **Lift up and secure with jack stands or blocking the rear of the machine, do not run the machine while adjusting.**
  Remove rear wheels.
- **Do not adjust only one of the following adjustments; exclude "MOTION CONTROL LEVER ALIGNMENT".**
  They are interlinked.
- **If you feel you are unable to make the following adjustments correctly and safely, please contact your local KUBOTA Dealer.**

IMPORTANT :

- Right and left motion control levers can be adjusted independently.

■HST NEUTRAL

1. Lift-up and secure with jack stands or blocking the rear of the machine frame.
2. Remove both rear wheels.
3. Start the engine, and run at maximum speed.
4. Place the motion control lever in "NEUTRAL LOCK" position.
5. Loosen the 3 bolts of the guide plate.
   Adjust the guide plate position until the rear axle rotation stops.
6. Tighten the rear bolt and place the lever in "NEUTRAL LOCK" position. Check that the rear axle does not rotate.
   If the axle does not stop rotating, adjust the "HST NEUTRAL" again.

Tightening torque	23.6 to 27.4 N-m (2.4 to 2.8 kgf-m, 17.4 to 20.2 lbf-ft)

7. Adjust the other side "HST NEUTRAL" equally.
8. After adjustment, make sure to stop the engine immediately.

[RH]

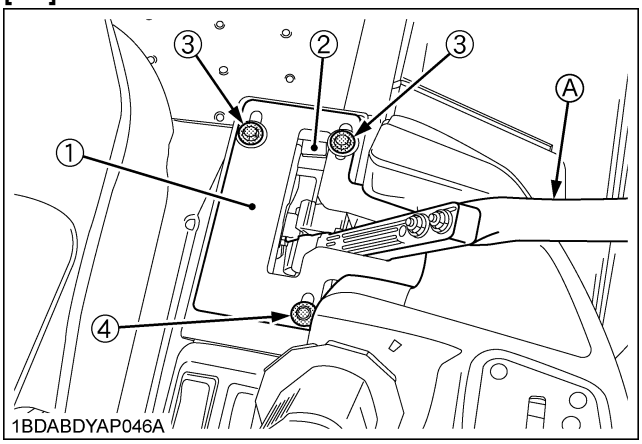

(1) Guide plate
(2) Speed adjust plate
(3) Bolt (front)
(4) Bolt (rear)
(A) Motion control lever

https://truckmanualshub.com/

[LH]

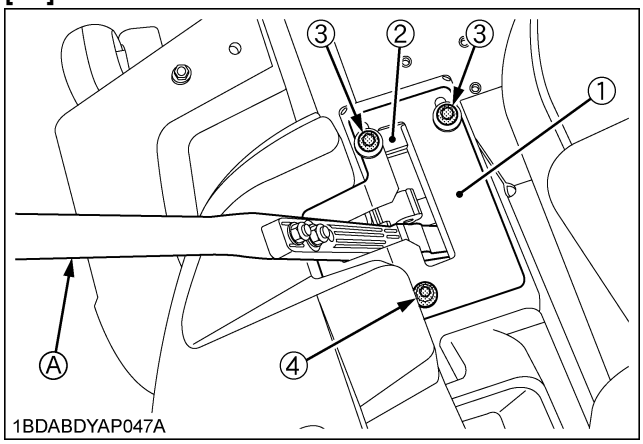

(1) Guide plate
(2) Speed adjust plate
(3) Bolt (front)
(4) Bolt (rear)
(A) Motion control lever

9. Push the motion control lever until it contacts the speed adjust plate and reaches the end of its range of motion. Then move the speed adjust plate to 2-3 mm backward and tighten 2 front bolts securely.

Tightening torque	23.6 to 27.4 N-m (2.4 to 2.8 kgf-m, 17.4 to 20.2 lbf-ft)

10. If at full speed the machine pulls one direction or the other, it is an indication that one wheel is turning faster than the other.
    To adjust the condition, proceed as follows:
    (1) Park the machine on a firm and level surface.
    (2) Stop the engine.
    (3) Loosen 2 front bolts of faster side.
    (4) Move the speed adjust plate to backward.
    (5) Tighten 2 front bolts securely.

Tightening torque	23.6 to 27.4 N-m (2.4 to 2.8 kgf-m, 17.4 to 20.2 lbf-ft)

■MAXIMUM SPEED (FORWARD)

Consult your local KUBOTA Dealer for this service.

■MOTION CONTROL LEVER ALIGNMENT

◆ **Check the alignment**

Check the gap and space between the levers, at the maximum forward position.

Recommendation	Gap: 0 to 2 mm (0 to 0.08 in.)

If positions of the control levers are unequal, an adjustment is necessary.

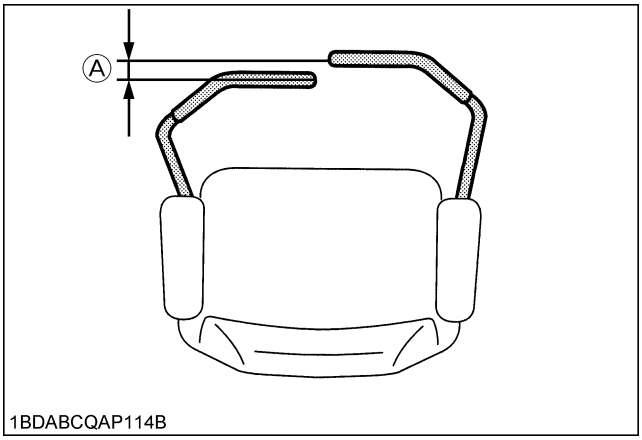

(A) "GAP"

WARNING

To avoid serious injury:

- **Park the machine on a firm and level surface.**
- **Stop the engine, remove the key and apply the parking brake.**

https://truckmanualshub.com/

◆ **Aligning the control levers**

1. Stop the engine and apply the parking brake.

Lever position (High or Low)

2. Remove the bolts and select the motion control lever position, high or low.
3. Tighten the bolts.

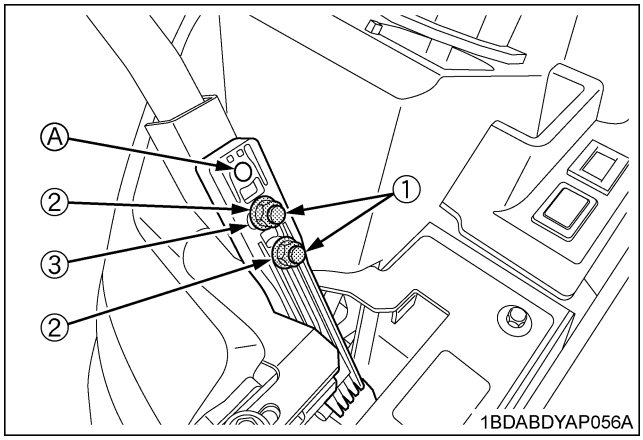

(1) Bolt *(A) High position*
(2) Flange nut
(3) Tab slot

Lever alignment (Right and Left)

4. Loosen the bolts.
5. Slide both levers forward or rearward to the desired position within tab slots until levers are aligned.
6. Tighten the bolts.

MOWER DECK LEVEL

■ANTI-SCALP ROLLERS

WARNING

To avoid serious injury:

- **Park the machine on a firm and level surface.**
- **Apply the parking brake.**
- **Stop the engine and remove the key.**
- **Wait for all moving parts to stop.**

IMPORTANT :

- The flattest cut can be achieved by having the anti-scalp rollers adjusted off the ground.
  Check anti-scalp roller adjustments each time the mower deck cutting height is changed.
  It is recommended that all the anti-scalp rollers be kept off the ground to minimize scuffing.

1. Check the machine tire pressure.
   Inflate tires to the correct pressure. (See "TIRES AND WHEELS" section.)
2. Start the engine.
3. Raise up the mower deck to the transport position. (Also the top end of the lift.)
4. Turn the cutting height control dial to adjust height.
5. Lower the mower deck.
6. Adjust the height of the front side anti-scalp roller to one of 4 positions to approximately 19 mm (3/4 in.) between rollers and the ground.
   Adjust 3 rollers to the same height.

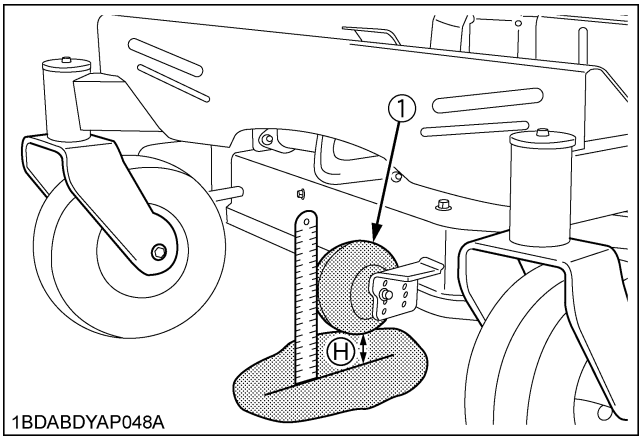

(1) Front side anti-scalp roller *(H) 19 mm (3/4 in.)*

7. Install the roller with attaching hardware.

https://truckmanualshub.com/

■LEVEL MOWER DECK (Side-to-Side)

WARNING

To avoid serious injury:
- **Park the machine on a firm and level surface.**
- **Apply the parking brake.**
- **Disengage PTO (OFF).**
- **Stop the engine and remove the key while checking or adjusting the level of the mower deck.**

IMPORTANT :
- Check the machine tire pressure.
  Inflate tires to the correct pressure.
  (See "TIRES AND WHEELS" section.)

◆ Checking level (Side-to-Side)

NOTE :
- Mower deck anti-scalp rollers should not contact the ground.

1. Raise the mower deck to the transport position. (Also the top end).
2. Turn the cutting height set dial to the 3 in. cutting height position.
3. Lower the mower deck.
4. Position the right mower blade in the Side-to-Side position.
5. Measure from outside blade tip to the level surface with a short ruler or leveling gauge.

Reference

Height of the blade at the flat surface	76 mm (3 in.)

NOTE :
- There is a difference of the blade height between on the flat surface and ground.

6. Check that the left side blade is same height.
   The difference between both measurements should be less than 3 mm (1/8 in.).
7. If the Side-to-Side adjustment is not within the given tolerance, adjustment is necessary.

Side-to-Side adjustment	Less than 3 mm (1/8 in.)

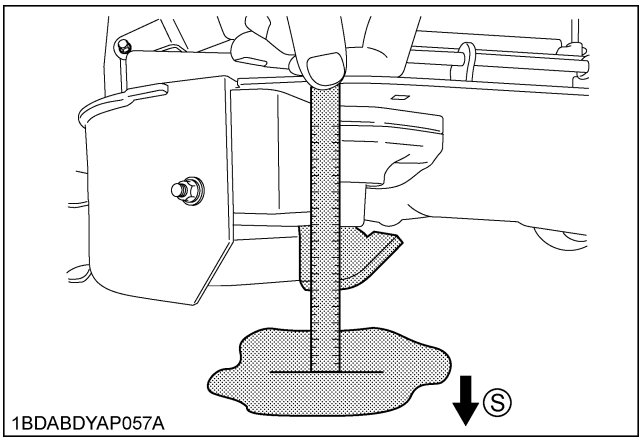

(S) Side

◆ Adjusting level (Side-to-Side)

1. Raise up the mower deck to the transport position. (Also the top end).
2. Turn the cutting height set dial to the 3 in. cutting height position.
3. Place 51 mm (2 in.) height wood blocks under each side of the mower deck.
   Anti-scalp rollers must not rest on the wood block.
4. Lower the mower deck.
5. Position mower blade in the Side-to-Side position.
6. Loosen the jam nuts of the right side of the machine.
7. Adjust the cutting height fine tuning bolts to set 76 mm (3 in.) blade height.
   Front and rear side bolts must be adjusted.
8. Jam the nuts.
9. Adjust the left side equally.
10. Check the side-to-side level and if it is not level, adjustment is necessary.

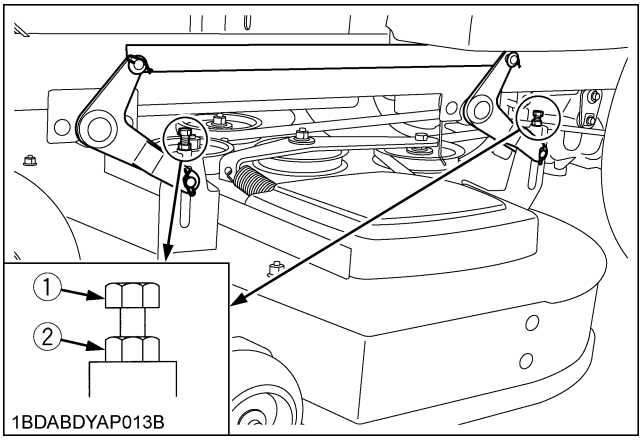

(1) Cutting height fine tuning bolt
(2) Jam nut

https://truckmanualshub.com/

■LEVEL MOWER DECK (Front-to-Rear)

WARNING

To avoid serious injury:

- **Park the machine on a firm and level surface.**
- **Engage the parking brake.**
- **Disengage PTO.**
- **Stop the engine and remove the key while checking or adjusting the level of the mower deck.**

IMPORTANT :

- Check the machine tire pressure.
  Inflate tires to the correct pressure.
  (See "TIRES AND WHEELS" section.)

◆ **Checking level (Front-to-Rear)**

NOTE :

- Mower deck anti-scalp rollers should not contact the ground.

1. Raise the mower deck to the transport position. (Also the top end).
2. Turn the cutting height set dial to the 3 in. cutting height position.
3. Lower the mower deck.
4. Position the right mower blade in the Front-to-Rear position.
5. Measure from the right front blade tip to the level surface with a short ruler or leveling gauge.
6. Turn the blade 180° and measure from right rear blade tip to the level surface.
7. Check that the left side blade has the same dimension.
   The difference between both measurements should be less than 6 mm (1/4 in.).
   Front side must be lower than rear side.
8. If the Front-to-Rear adjustment is not within the given tolerance, adjustment is necessary.

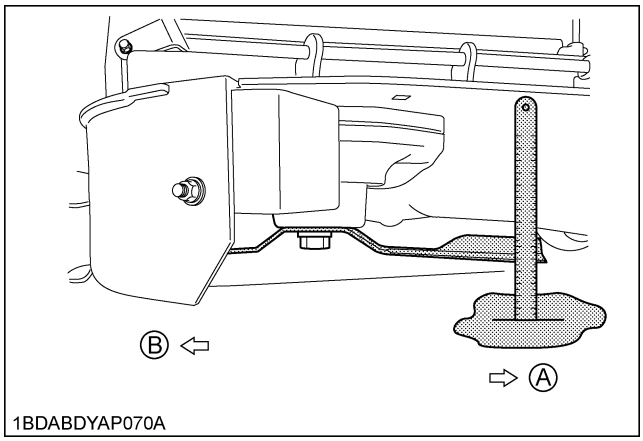

(A) Front
(B) Rear

Front-to-Rear adjustment	Less than 6 mm (1/4 in.) Front side must be lower than Rear side.

◆ **Adjusting level (Front-to-Rear)**

1. Raise up the mower deck to the transport position. (Also the top end).
2. Turn the cutting height set dial to the 3 in. cutting height position.
3. Place 51 mm (2 in.) height wood blocks under each side of the mower deck.
   Anti-scalp rollers must not rest on the wood block.
4. Lower the mower deck.
5. Loosen the jam nuts of the front side of the machine.
6. Adjust the cutting height fine tuning bolts to set 76 mm (3 in.) blade height.
   Both front side bolts must be adjusted.
7. Jam the nuts.
8. Adjust the other side equally.

IMPORTANT :

- The difference between both measurements should be less than 6 mm (1/4 in.).
  Front side must be lower than rear side.

9. Check the front-to-rear level and if it is not level, adjustment is necessary.

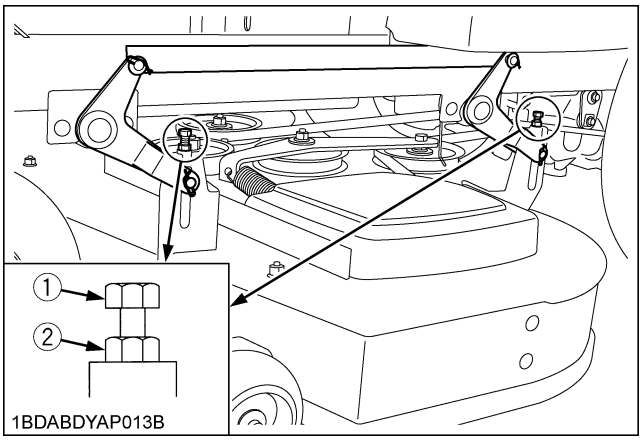

(1) Cutting height fine tuning bolt
(2) Jam nut

https://truckmanualshub.com/

GENERAL TORQUE SPECIFICATION

American standard cap screws with UNC or UNF threads				Metric cap screws			
SAE grade No.		GR.5	GR.8	Property class		Class 8.8	Class 10.9
1/4	(lbf-ft)	8 - 9.6	12 - 14.4	M6	(lbf-ft)	7.2 - 8.3	
	(N-m)	10.7 - 12.9	16.1 - 19.3		(N-m)	9.81 - 11.3	
	(kgf-m)	1.11 - 1.33	1.66 - 1.99		(kgf-m)	1.0 - 1.15	
5/16	(lbf-ft)	17 - 20.5	24 - 29	M8	(lbf-ft)	17.4 - 20.2	21.7 - 25.3
	(N-m)	23.1 - 27.8	32.5 - 39.3		(N-m)	23.6 - 27.4	29.4 - 34.3
	(kgf-m)	2.35 - 2.84	3.31 - 4.01		(kgf-m)	2.4 - 2.8	3.0 - 3.5
3/8	(lbf-ft)	35 - 42	45 - 54	M10	(lbf-ft)	35.5 - 41.2	44.9 - 52.1
	(N-m)	47.5 - 57.0	61.0 - 73.2		(N-m)	48.1 - 55.8	60.8 - 70.5
	(kgf-m)	4.84 - 5.82	6.22 - 7.47		(kgf-m)	4.9 - 5.7	6.2 - 7.2
1/2	(lbf-ft)	80 - 96	110 - 132	M12	(lbf-ft)	57.2 - 66.5	76.0 - 86.8
	(N-m)	108.5 - 130.2	149.2 - 179.0		(N-m)	77.5 - 90.1	103 - 117
	(kgf-m)	11.07 - 13.29	15.22 - 18.27		(kgf-m)	7.9 - 9.2	10.5 - 12.0
9/16	(lbf-ft)	110 - 132	160 - 192	M14	(lbf-ft)	91.2 - 108	123 - 144
	(N-m)	149.2 - 179.0	217.0 - 260.4		(N-m)	124 - 127	167 - 196
	(kgf-m)	15.22 - 18.27	22.14 - 26.57		(kgf-m)	12.6 - 15.0	17.0 - 20.0
5/8	(lbf-ft)	150 - 180	220 - 264	M16	(lbf-ft)	145 - 166	192 - 224
	(N-m)	203.4 - 244.1	298.3 - 358.0		(N-m)	196 - 225	260 - 303
	(kgf-m)	20.75 - 24.91	30.44 - 36.53		(kgf-m)	20.0 - 23.0	26.5 - 31.0

https://truckmanualshub.com/

TIGHTENING TORQUE CHART

Thread size d (mm)	Hexa-Bolt Head size B (mm)	No mark			7T		
		lbf-ft	N-m	kgf-m	lbf-ft	N-m	kgf-m
M8	12 or 13	**13.0 - 15.2** (14.1 ± 1.1)	**17.8 - 20.6** (19.2 ± 1.4)	**1.9 - 2.1** (2.0 ± 0.1)	**17.5 - 20.3** (18.9 ± 1.4)	**23.5 - 27.5** (25.5 ± 2.0)	**2.4 - 2.8** (2.6 ± 0.2)
M10	14 or 17	**28.9 - 33.3** (31.1 ± 2.2)	**39.3 - 45.1** (42.2 ± 2.9)	**4.0 - 4.6** (4.3 ± 0.3)	**35.4 - 41.2** (38.3 ± 2.9)	**48.1 - 55.9** (52.0 ± 3.9)	**4.9 - 5.7** (5.3 ± 0.4)
M12	17 or 19	**46.3 - 53.5** (49.9 ± 3.6)	**62.8 - 72.6** (67.7 ± 4.9)	**6.4 - 7.4** (6.9 ± 0.5)	**57.1 - 66.5** (61.8 ± 4.7)	**77.6 - 90.2** (83.9 ± 6.3)	**8.0 - 9.2** (8.6 ± 0.6)
M14	19 or 22	**79.6 - 92.6** (86.1 ± 6.5)	**107.9 - 125.5** (116.7 ± 8.8)	**11.0 - 12.8** (11.9 ± 0.9)	**91.1 - 108.5** (99.8 ± 8.7)	**123.6 - 147.0** (135.3 ± 11.7)	**12.6 - 15.0** (13.8 ± 1.2)

NOTE :
- Figure "7" on the top of the bolt indicates that the bolt is of special material.
- Before tightening, check the figure on the top of bolt.

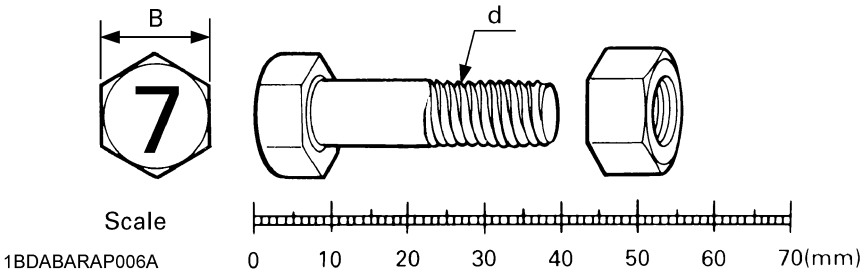

https://truckmanualshub.com/

STORAGE

WARNING

To avoid serious injury:

- **To reduce fire hazards, allow the engine and exhaust system to cool before storing the machine in an enclosed space or near combustible materials.**
- **To avoid the danger of exhaust fume poisoning, do not operate the engine in a closed building without proper ventilation.**
- **Do not clean the machine with engine running.**
- **To avoid fire hazards, Do not leave grass and leaves in the mower and the grass catcher.**
- **When storing, remove the key from the key switch to avoid operation by unauthorized persons.**

When the machine will not be operated for over 2 months, clean the machine and perform the following operations before storage.

1. Repair parts as necessary.
2. Check bolts and nuts and tighten as necessary.
3. Apply grease or engine oil to parts most likely to rust.
4. Inflate the tires to a little above the standard pressure levels. (Approximately 110%)
5. Lower the mower to the ground.
6. Remove the battery from the machine, recharge it, adjust the electrolyte to the proper level, and store in a cool dry place.
   The battery discharges over time even while in storage. Recharge it once a month in hot seasons and once every 2 months in cold seasons.
7. Drain fuel tank, fuel lines, and carburetor, or use a fuel stabilizer, to prevent deterioration of the gasoline. If you choose to use a fuel stabilizer, follow the manufacturers recommendations, and add the correct amount for the capacity of the fuel system. Fill the fuel tank with clean, fresh gasoline. Run the engine for 2 to 3 minutes to get stabilized fuel into the carburetor.
8. Store the machine where it is dry and sheltered from rain. Cover the machine with a vinyl tarp.
9. Moisture content in most grasses can damage the mower and grass catcher if these components are not properly cleaned after use.
   Make sure the mower and the grass catcher are clean and completely empty before storage.

REMOVING THE MOWER FROM STORAGE

1. Check the tire inflation pressure and adjust as required.
2. Install the battery. Before installing the battery, be sure it is fully charged.
3. Do daily checking. (See "DAILY CHECK" in "PERIODIC SERVICE" section.)
4. Check all fluid levels. (engine oil, hydrostatic oil)
5. Start the engine. Shut the engine off and walk around the machine and make a visual inspection looking for evidence of oil or other fluids.
6. Run engine a couple of minutes before you put engine under load.

https://truckmanualshub.com/

TROUBLESHOOTING

ENGINE TROUBLESHOOTING

If something is wrong with the engine, refer to the table below for the cause and its corrective measure.

Symptom (If)	Cause	Remedy
Engine is difficult to start or will not start.	● No operator on the seat.	● Sit on the operator's seat.
	● Parking brake lever not in the proper position.	● Apply the parking brake.
	● PTO switch not in the proper position.	● Make sure PTO switch is in "DISENGAGED" (OFF) position.
	● Motion control levers not in the proper position.	● Make sure motion control levers are in "NEUTRAL LOCK" position.
	● Key switch is not in the proper position.	● Make sure key switch is in "ON" position.
	● No fuel.	● Replenish fuel.
	● Improper or stale fuel. (Fuel quality is poor.)	● Replace fuel and the fuel filter.
	● Water or dirt in the fuel system.	● Replace fuel and see your Kubota dealer.
	● Fuel hose or fuel filter clogged or damaged.	● Clean or replace fuel lines, and see your Kubota dealer.
	● Air cleaner is clogged.	● Clean or replace the air cleaner.
	● Spark plug defective.	● Adjust the spark plug gap or replace the spark plug.
		● Check the spark plug wire connection.
	● Fuse is blown.	● Replace the fuse.
	● Engine oil viscosity is wrong.	● Use oils of different viscosities, depending on ambient temperature.
	● Battery becomes weak and the engine does not turn over quick enough.	● Clean battery cables and terminals.
		● Charge the battery.
		● In cold weather, always remove the battery from the engine, charge and store it indoors. Install it on the machine only when the machine is going to be used.
	● Over choking or choke is adjusted incorrectly.	● Check and see your Kubota dealer.
Insufficient engine power.	● Insufficient or dirty fuel.	● Check the fuel system.
	● Fuel filter is clogged.	● Replace the fuel filter.
	● Air cleaner is clogged.	● Clean or replace the air cleaner.
	● Spark plug defective.	● Adjust the spark plug gap or replace it.

https://truckmanualshub.com/

Symptom (If)	Cause	Remedy
Engine stops suddenly.	● Insufficient fuel.	● Refuel. ● Check the fuel valve position. ● Check the carburetor fuel valve position.
Rough engine running.	● Spark plug defective.	● Adjust the spark plug gap or replace it.
	● Spark plug wire defective.	● See your Kubota dealer.
	● Carburetion problems.	● See your Kubota dealer.
	● Ignition coil defective.	● See your Kubota dealer.
	● Choke is adjusted incorrectly.	● See your Kubota dealer.
	● Fuel hose or fuel filter clogged or damaged.	● Clean or replace fuel lines, and see your Kubota dealer.
	● Improper or stale fuel. (Fuel quality is poor.)	● Replace fuel and the fuel filter.
	● Air cleaner is clogged.	● Clean or replace the air cleaner.
Exhaust fumes are colored. (Black, Dark or Gray)	● Overload.	● Reduce load.
	● Low grade fuel is used.	● Use specified fuel.
	● Fuel filter is clogged.	● Replace the fuel filter.
	● Air cleaner is clogged.	● Clean or replace the air cleaner element.
	● Choke is not fully opened.	● Check the choke position.
Exhaust fumes are colored. (White or Blue)	● Excessive engine oil.	● Reduce to the specified oil level.
	● Piston ring is worn or stuck.	● See your Kubota dealer.
Engine overheats.	● Engine is overloaded.	● Lower speed or reduce load.
	● Engine oil is insufficient.	● Replenish engine oil.
	● Engine air intake screen and cooling fins are dirty.	● Clean the air intake screen and cooling fins.
	● Air cleaner element is plugged.	● Clean or replace the air cleaner element.
	● Engine speed is too low.	● Operate at the "FAST" speed.
	● Operating ground speed is too fast.	● Operate the machine at the slower ground speed.
Engine knocks.	● Stale or low octane fuel.	● Use specified fuel.
	● Engine overloaded.	● Lower ground speed or reduce load.
	● Engine speed is too low.	● Operate at the "FAST" speed.
Engine will not idle.	● Spark plug defective.	● Adjust the spark plug gap or replace it.
	● Faulty spark plug.	● Replace the spark plug.
	● Carburetion problem.	● See your Kubota dealer.

If you have any questions, contact your local KUBOTA Dealer.

https://truckmanualshub.com/

BATTERY TROUBLESHOOTING

Symptom (If)	Cause	Remedy	Preventive measure
Starter does not function.	● Battery overused until lights are dim.	● Charge battery sufficiently.	● Charge the battery properly.
	● Battery has not been recharged.		
	● Poor terminal connection.	● Clean the terminal and tighten securely.	● Keep the terminal clean and tight. Apply grease and treat with anti-corrosives.
	● Battery life expired.	● Replace battery.	
From beginning starter does not function, and lights soon become dim.	● Insufficient charging.	● Charge battery sufficiently.	● Battery must be serviced properly before initial use.
When viewed from top, the top of plates look whitish.	● Battery was used with an insufficient amount of electrolyte.	● Add distilled water and charge the battery.	● Regularly check the electrolyte level.
	● Battery was used too much without recharging.	● Charge battery sufficiently.	● Charge the battery properly.
Recharging is impossible.	● Battery life expired.	● Replace battery.	
Terminals are severely corroded and heat up.	● Poor terminal connection.	● Clean the terminal and tighten securely.	● Keep the terminal clean and tight. Apply grease and treat with anti-corrosives.
Battery electrolyte level drops rapidly.	● There is a crack or pin holes in the electrolytic cells.	● Replace battery.	
	● Charging system trouble.	● Contact your local KUBOTA Dealer.	

If you have any questions, contact your local KUBOTA Dealer.

MACHINE TROUBLESHOOTING

Symptom (If)	Cause	Remedy
Machine operation is not smooth.	● Hydrostatic transaxle fluid is insufficient.	● Replenish oil.
	● Filter is clogged.	● Replace the filter.
Machine does not move while engine is running.	● Parking brake is on.	● Release the parking brake.
	● Transaxle fluid level is insufficient.	● Replenish oil.
Machine moves when motion control levers are in "NEUTRAL LOCK" position. (Engine is operated.)	● Hydrostatic lever linkage is not correctly adjusted.	● Ask your dealer for hydrostatic lever linkage adjustment.
	● Control linkage pivots are sticking.	● Full up and lubricate linkage.

If you have any questions, contact your local KUBOTA Dealer.

https://truckmanualshub.com/

MOWER TROUBLESHOOTING

Symptom (If)	Cause	Remedy
Blade does not rotate.	● PTO system is not normal: PTO system malfunctioning.	● See your Kubota Dealer.
	● PTO system is normal: Broken mower belt.	● Replace.
Mower belt slipping.	● Weaken tension spring.	● Replace.
	● Worn mower belt.	● Replace.
	● Mower plugged.	● Unplug and clean mower deck.
	● Debris in pulleys.	● Clean.
Discharge chute plugged.	● Grass too wet.	● Wait for grass to dry.
	● Grass too long.	● Raise cutting height and cut grass twice.
	● Cutting too low.	● Raise cutting height.
	● Engine rpm too low.	● Mow at full throttle.
	● Ground speed too fast.	● Slow down.
Streaking of grass uncut.	● Ground speed too fast.	● Slow down.
	● Engine rpm too low.	● Mow at full throttle, check and reset engine rpm.
	● Grass too long.	● Cut grass twice.
	● Blades dull or damaged.	● Replace blades or have blades sharpened.
	● Debris in mower deck.	● Clean mower deck.
Uneven cut.	● Mower deck not level.	● Level mower deck.
	● Ground speed too fast.	● Slow down.
	● Blades dull.	● Have blades sharpened.
	● Blades worn or damaged.	● Replace blades.
	● Low tire inflation.	● Add air to correct pressure.
	● Anti-scalp rollers not adjusted correctly.	● Adjust anti-scalp rollers.
	● Wheels pressure not adjusted correctly.	● Set both tire pressure to the correct pressure. (See "TIRES" in "TIRES AND WHEELS" section.)
Blades scalping grass.	● Cutting height too low.	● Raise cutting height.
	● Turning speed too fast.	● Reduce speed on turns.
	● Ridges in terrain.	● Change mowing pattern.
	● Rough or uneven terrain.	● Adjust wheels pressure and anti-scalp rollers.
	● Anti-scalp rollers not adjusted correctly.	● Adjust wheels pressure and anti-scalp rollers.
	● Bent blade(s).	● Replace blade(s).

https://truckmanualshub.com/

Symptom (If)	Cause	Remedy
Excessive vibration.	● Debris on mower deck or in pulleys.	● Clean mower deck and pulleys.
	● Damaged mower belt.	● Replace mower belt.
	● Damaged pulleys.	● Replace pulleys.
	● Pulleys out of alignment.	● Check pulleys.
	● Blades out of balance.	● Have blades balanced.
Mower loads down machine.	● Engine rpm too low.	● Mow at full throttle, check and reset engine rpm.
	● Ground speed too fast.	● Slow down.
	● Debris wrapped around mower spindles.	● Clean mower.
	● Front of deck too low.	● Adjust mower deck. (See "MOWER DECK LEVEL" in "ADJUSTMENT" section.)

If you have any questions, contact your local KUBOTA Dealer.

https://truckmanualshub.com/

INDEX

Air Cleaner Element (Z121S, Z125S).....44
Air Cleaner Element (Z121S, Z125S).....55
Air Cleaner Element (Z122E, Z125E).....37
Air Cleaner Element (Z122E, Z125E).....44
Air Cleaner Element (Z122E, Z125E).....55
Air Intake Screen.....34
Amount of Fuel and Refueling.....33
ANTI-SCALP ROLLERS 61
Battery Condition.....48
Blade 57
Carbon Canister Air Filter.....40
Carbon Canister Air Filter.....56
Combustion Chamber 55
Electric Clutch Adjustment 54
Engine Break-in.....15
Engine Breather Hose.....56
Engine Oil (Z121S, Z125S) 43
Engine Oil (Z122E, Z125E) 41
Engine Oil (Z122E, Z125E) 55
Engine Oil Filter (Z121S, Z125S) 51
Engine Oil Filter (Z122E, Z125E) 42
Engine Oil Filter (Z122E, Z125E) 55
Engine Oil Level 32
Engine Shroud.....45
Engine Start System.....39
Engine Valve Clearance (Z121S, Z125S) 55
Engine Valve Clearance (Z122E, Z125E) 55
Fuel Filter (Z122E, Z125E).....55
Fuel Gauge.....12
Fuel Lines.....47
Fuel Lines.....56
Fuses.....56
Hour Meter 12
HST NEUTRAL 59
Hydraulic Hose.....52
Hydraulic Hose.....56
Hydrostatic Transaxle Bypass Rods 21
Immediately Stop the Engine if:.....12
Inflation Pressure 25
Inflation Pressure 34
Key Switch.....11
LEVEL MOWER DECK (Front-to-Rear).....63
LEVEL MOWER DECK (Side-to-Side).....62
Light Switch 16
Lubricating Oil for New Machines.....15
Machine Break-in 15
MAXIMUM SPEED (FORWARD).....60
Motion Control Lever.....18
MOTION CONTROL LEVER ALIGNMENT... 60
Movable Parts..... 35
Mower Belt Replacement 58
Mower Lift Pedal..... 17
Muffler and Spark Arrester (if equipped) 43
Muffler and Spark Arrester (if equipped) 55
OPC System..... 40
Operator's Seat..... 16
Parking Brake Lever 17
Precleaner Element (Except Z125E) 36
Precleaner Element (Except Z125E) 44
Precleaner Element (Except Z125E) 55
PTO Switch..... 23
Remove and Install Front Caster Wheels..... 26
Seat Belt 16
Spark Plug 46
Spark Plug 55
Starting 24
Throttle Cable 50
Throttle Lever 11
Throttle Lever 17
Tire Pressure 34
Transaxle Fluid 54
Transaxle Fluid Level 35
Transaxle Oil Filter Cartridge..... 53
Warm-up and Transmission Oil in the Low Temperature Range 13