https://truckmanualshub.com/

Mobile crane LTM 1090-4.1

Max. lifting capacity: 90 t
Max. lifting height: 75 m
Max. working radius: 62 m

LIEBHERR

https://truckmanualshub.com/

Mobile crane LTM 1090-4.1
Strong and flexible

https://truckmanualshub.com/

A long telescopic boom, high capacities, an extraordinary mobility as well as a comprehensive comfort and safety configuration distinguish the mobile crane LTM 1090-4.1 from Liebherr. The 90-ton crane offers state-of-the-art technology for more convenience for the practical operation.

- **50 m long telescopic boom**
- **19 m long double swing-away jib, optional hydraulically adjustable**
- **75 m hook height with telescopic boom extension and swing-away jib**
- **Extremely compact dimensions and greatest manoeuvrability in its class**
- **Superstructure engine matched to best possible effect to the crane operation**
- **Active, speed depending rear axle steering**
- **Air operated disk brakes**
- **48-t overall weight, incl. 6.7-t ballast at 12-t axle load**

https://truckmanualshub.com/

Drivetrain

- 6-cylinder Liebherr turbo-diesel engine, 350 kW/476 hp, max. torque: 2220 Nm
- Automated ZF AS-TRONIC gearbox, 12 forward and 2 reverse speeds
- ZF intarder directly at the gearbox
- Axles 2, 3 and 4 driven, axle one as option

https://truckmanualshub.com/

State-of-the-art chassis and drive technology

High mobility and cost effectiveness

A powerful 6-cylinder Liebherr turbo-diesel engine with 350 kW/476 hp ensures swift driving performance. The automatic 12-speed power shift system ZF-AS-TRONIC with intarder provides a high level of cost effectiveness and excellent comfort.

- Reduced fuel consumption through large number of gears and the efficiency of the dry coupling
- Excellent manoeuvrability and minimum crawling speed due to 2-stage transfer case
- ABV – automatic blocking preventer with ASR anti-slip control
- Wear-free braking with ZF intarder
- Telma eddy current brake optional, wear free and comfortable

Compact, agile and weight-optimised

Thanks to its extremely compact design, the LTM 1090-4.1 can operate on the smallest of construction sites.

- Chassis length only 10.63 m
- Smallest turning-circle radius only 8.33 m
- Vehicle width only 2.75 m
- Ballast radius only 3.69 m up to 17 t ballast, 3.80 m with full ballast

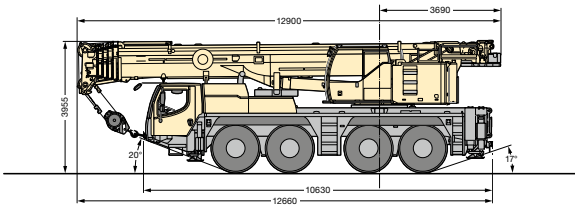

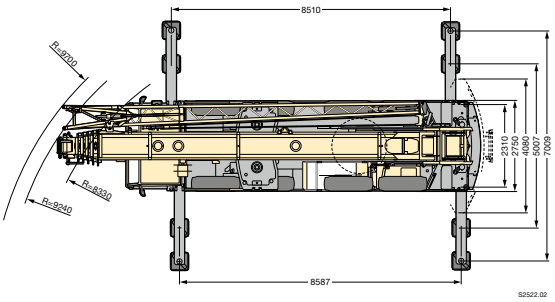

Hydro-pneumatic suspension Niveaumatik

- Maintenance-free suspension cylinders
- Large dimensions to cope with high axle loads
- Suspension travel: +150/-100 mm
- High lateral stability when cornering
- Choice of driving state using fixed programmes

Pneumatic disc brakes

- High braking power, improved control
- Improved directional stability
- No reduction in braking force at high braking-temperatures (fading)
- Longer life
- Shorter labour times for changing the screening surfaces
- Brake pads with wear indicators

https://truckmanualshub.com/

5 steering programmes

- Programme selection by simple push button
- Clear arrangement of the control elements and displays
- Programmes changeable during driving
- Crab steering controlled comfortably by the steering wheel

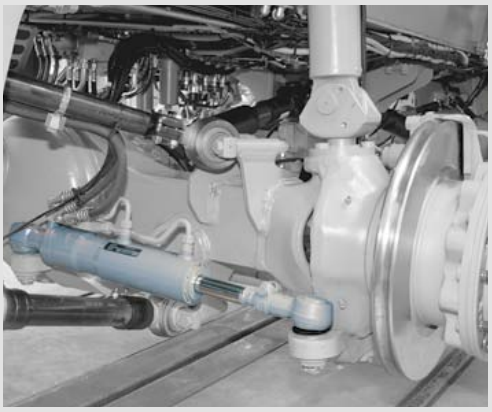

https://truckmanualshub.com/

Variable steering concept

Centring cylinder at the rear axles

- Automatic straight positioning of the rear axles in case of failure

Active rear axle steering

The rear axles are electro-hydraulically actively steered depending on the speed and the steering angle of the front axles. 5 steering programmes (P) are preselectable by push button.

- Distinct reduction of the tyre wear
- Improvement of the manoeuvrability
- Stable driving performance also at high speeds
- All 4 axles steerable

High safety standards – complete know-how from Liebherr

- Centring cylinders for automatic straightening of the rear axles in case of failure
- Two independent hydraulic circuits with wheel driven and motor driven hydraulic pumps
- Two independent steering computers

P1 Road steering

The axles 1 and 2 are mechanically steered by the steering wheel. The axle 4 is actively steered depending on the speed and on the steering angle of the front axle. From 30 km/h it will be adjusted to straight driving and fixed. Axle 3 is none steered for road driving.

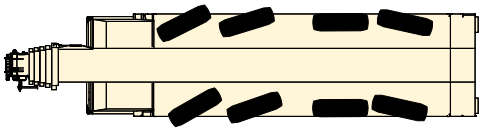

P2 All-wheel steering

The axles 3 and 4 are turned by the steering wheel depending on the steering angle of the front axle to provide for the smallest turning radius.

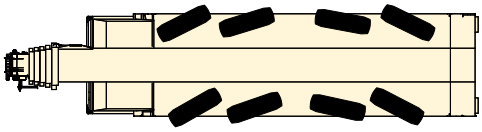

P3 Crab steering

The axles 3 and 4 are turned by the steering wheel to the same direction as the steering position of axle 1 and 2.

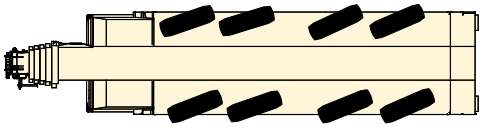

P4 Reduced swing out

The axles 3 and 4 are turned depending on the wheel turn of the front axles to minimize the back swing of the rear of the chassis.

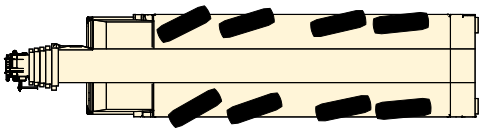

P5 Independent rear axle steering

The axles 1 and 2 are steered by the steering wheel, the axles 3 and 4 are steered by push buttons independently from the steering angle of the axles 1 and 2

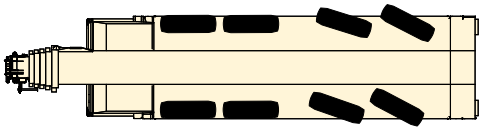

https://truckmanualshub.com/

The driver's cab

- Corrosion-resistant
- Electric window winders
- Safety glass on all sides
- Tinted glass
- Heated and electronically adjustable outside mirrors
- Air-sprung driver's seat with lumbar support

https://truckmanualshub.com/

Comfort and functionality

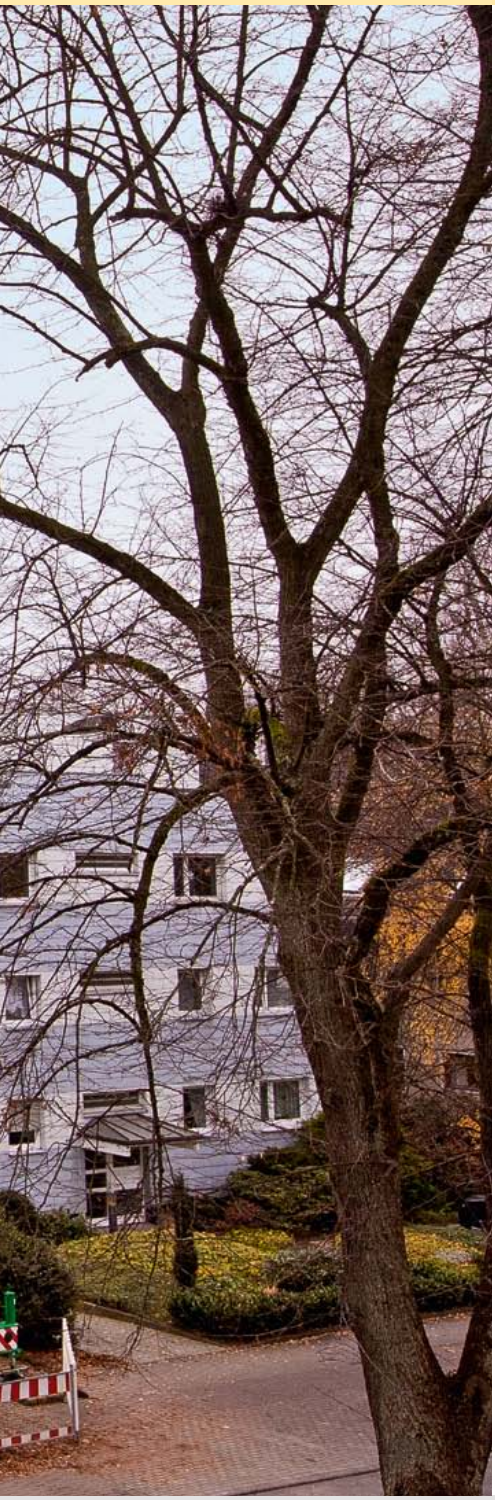

Modern driving cab and crane cab

The modern driving cab as well as the backwards tiltable crane cab offer a comfortable and functional working place. The control elements and displays are arranged according to ergonometric factors. Thus a safe and wear free working is assured.

Fast and safe erection

The supporting, the counterweight assembly as well as the mounting of the additional equipment are designed for speed, safety and comfort. For the safety of the operator's pedestals, hand holds and railings are provided.

Crane supporting – fast, comfortable and safe

- BTT - Bluetooth Terminal, mobile control and display unit
- Electronic levelling display
- Fully automatic levelling by push button
- Engine-start/stop and speed regulation
- Lighting of support area with 4 integrated floodlights
- Stroke of supporting cylinders front 650 mm, rear 700 mm
- Outriggers 1-stage, fully hydraulic, low maintenance extending system

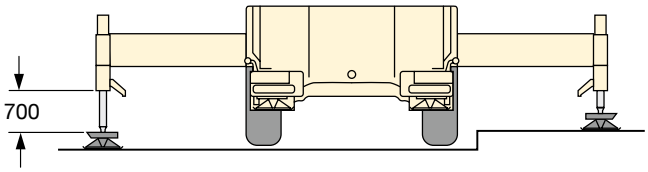

The crane cab

- Large field of vision
- Tinted windows, front screen can be opened
- Crane driver's seat with lumbar support, multiply adjustable
- Heat and noise insulated interior cladding
- Sidewise extendable running board
- Corrosion resistant
- Working floodlight
- Can be tilted 20° backwards

https://truckmanualshub.com/

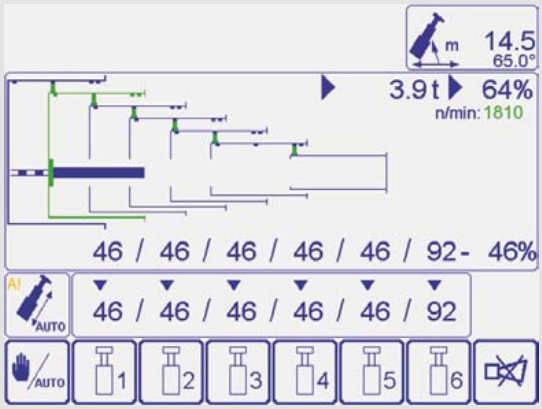

The fully automatic telescoping system „TELEMATIK“

- Greater lifting capacities with longer booms and larger radii thanks to ‚light‘ telescoping system
- One-stage hydraulic cylinder with hydraulically operated drive pin
- Maintenance-free telescoping system
- Fully automatic telescoping
- Easiest control and monitoring of telescoping action on LICCON screen

2.6 m long assembly jib

https://truckmanualshub.com/

High lifting capacities and flexible boom system

Powerful, long telescopic boom and functional lattice extensions

The telescopic boom consists of the base section and 5 telescopic sections, which can be comfortably and automatically extended and pinned to the requested length by the thousand fold proven single cylinder telescoping system TELEMATIK.

- 50 m long telescopic boom
- 10.5 m – 19 m long double swing-away jib, attachable at 0°, 20° and 40°
- Hydraulic adjustment of the swing-away jib at full load from 0° to 40° (optional), interpolation of capacities
- Hydraulic assistance for assembly of the swing-away jib with BTT
- 7 m section for extending the telescopic boom for operation with swing-away jib

High capacities with full counterweight as well as with partial counterweight offer a wide application of operations

- High lateral stability due to the oval boom profile
- Optimized capacities due to the numerous extension variations
- Capacity 9 t at 50 m long telescopic boom

High capacities at unpinned telescopic lengths

- High telescopable capacities due to interpolation
- Separate charts for holding of the load at unpinned telescopic lengths
- Display at LICCON monitor

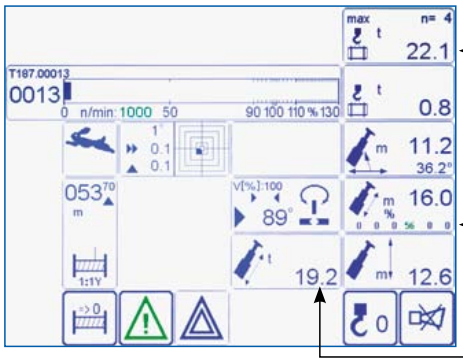

Holding capacity

Unpinned telescopic length

Telescopable capacity

Rooster sheave, foldable sidewise

Hydraulic assistance for assembly of the swing-away jib with BTT

https://truckmanualshub.com/

Hydraulic folding jib

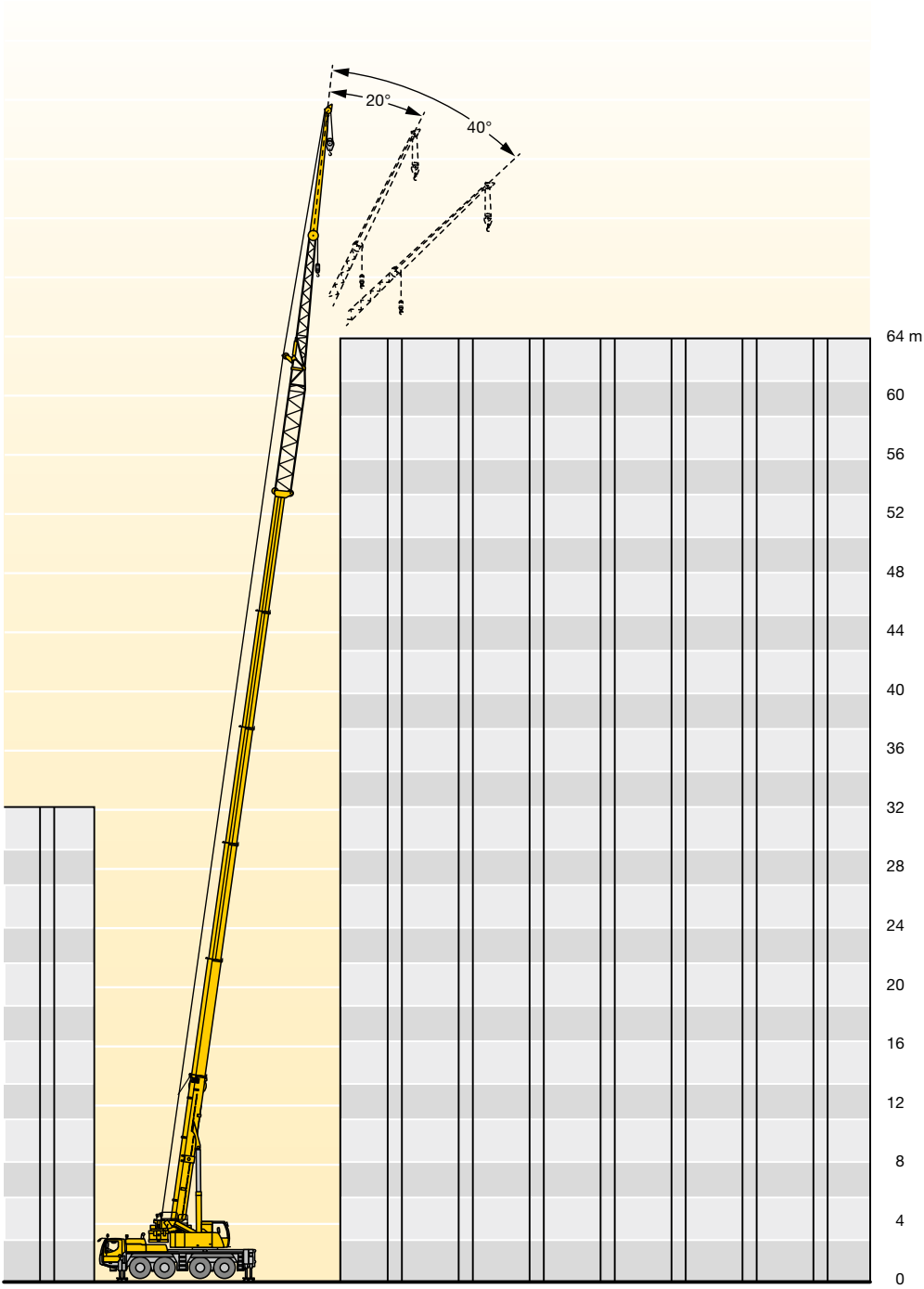

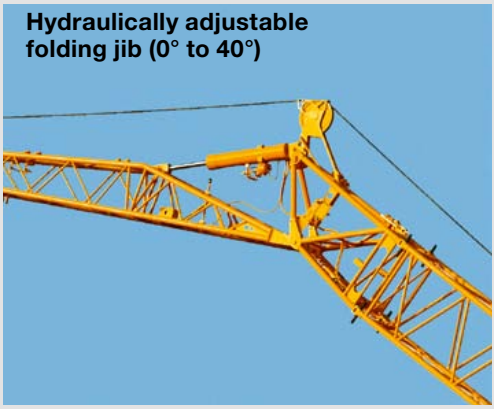

Hydraulically adjustable folding jib (0° to 40°)

Hose reel for the hydraulic cylinder

https://truckmanualshub.com/

Variable counterweight

Ballast assembly – in a matter of minutes

- Multiple ballast variations from 6.7 t to 21 t
- Rapid ballasting with keyhole technology from within the crane cab
- Compact ballast dimensions: with a 17-t ballast, the ballast width is only 2.65 m
- Ballast radius: only 3.69 m up to 17 t ballast, 3.80 m with full ballast
- 48-t total weight incl. 6.7-t ballast at 12-t axle load

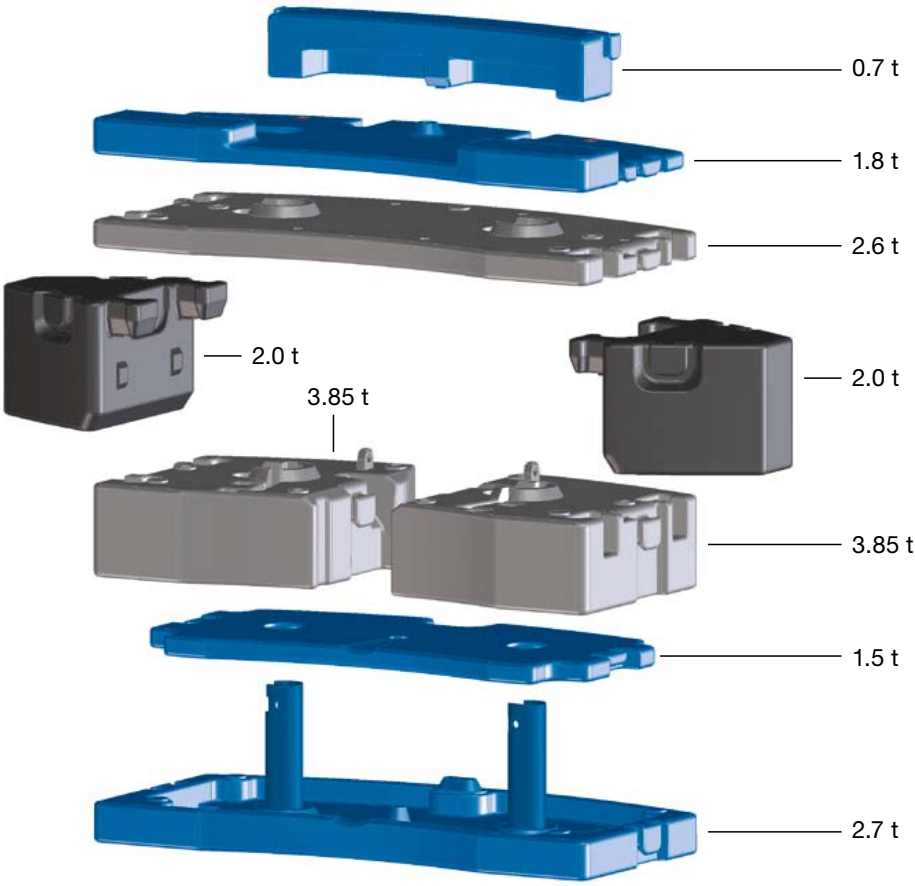

Basic ballast	6.7 t
Additional ballast	14.3 t
Total	**21.0 t**

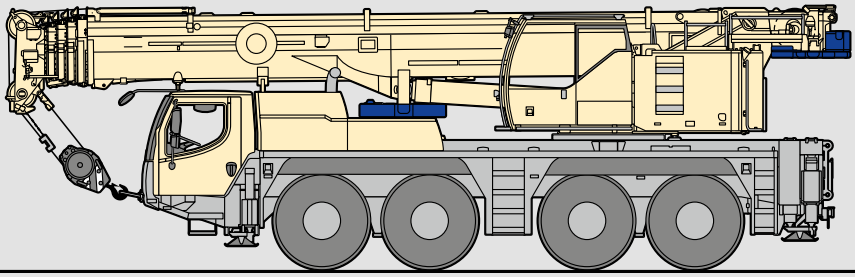

https://truckmanualshub.com/

The hoist gear

- Liebherr hoist winch with internal planetary gear and spring-loaded multi-disk brake
- Rope pull 57 kN at the outer layer
- Max. rope speed 125 m/min
- 2. hoist gear optional

https://truckmanualshub.com/

High-power crane drive

With tried-and-tested components

The drive components for crane operation are constructed for high performance and ensure sensitive and precise load handling. They are specially designed to suit the crane's usage and have been subjected to hard endurance tests.

- Crane engine: four-cylinder Liebherr turbo-diesel engine, 129 kW/175 hp, 815 Nm max. torque, optimised fuel consumption thanks to electronic engine management
- Diesel-hydraulic crane drive, open oil circuits with electric LOAD SENSING control, 4 simultaneous working motions possible
- Electric/electronic SPS crane control via LICCON computer system
- Slewing gear can be switched as standard: released or hydraulically locked. The movement can thus be optimally adapted to the different operating requirements, e.g. sensitive assembly work or rapid work cycles
- Self-manufactured Liebherr winches, 57 kN line pull at the outer layer, greater line pull means less rope reeving is needed

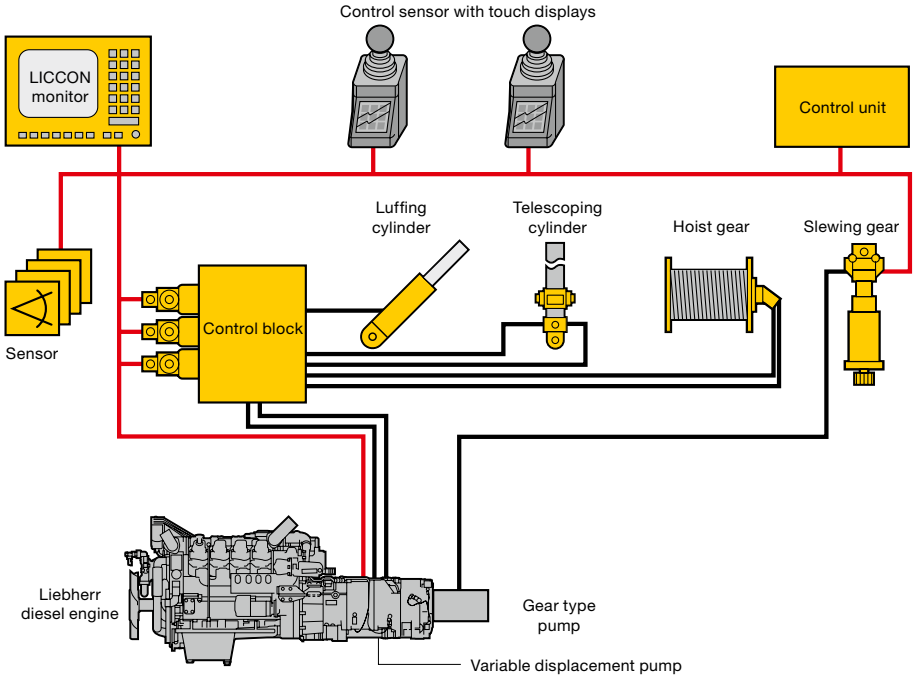

The slewing gear

- Liebherr planetary gearbox, spring-loaded multi-disk brake
- Reversible open or hydraulically locked as standard
- Slewing speed from 0 – 1.7 rpm infinitively variable

The central greasing

- Standard central greasing device for slewing bearing, boom bearing, luffing cylinder and winch bearing
- Even supply of grease
- Filling quantity visible at any time in transparent reservoir

https://truckmanualshub.com/

The LICCON test system

- Rapid localisation of problems without any other measuring instruments
- Error code and description displayed
- Convenient interactive functions for monitoring all inputs and outputs
- Displays functions and allocation of sensors and actuators

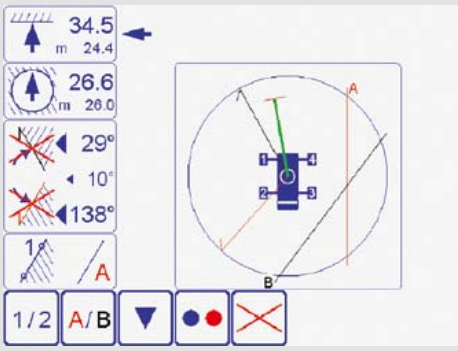

https://truckmanualshub.com/

Intelligent crane control

For functional and safe crane operation: the LICCON computer system

The soft and hardware of the mobile crane control is developed by Liebherr in-house. The centre is the LICCON computer system (Liebherr Computed Control).

- Integrated LML load moment limiter
- Key components are in-house manufactured by Liebherr
- Guaranteed spare parts availability
- Worldwide proven under the most different climate conditions
- Operator friendly

The second control generation LICCON2 is the result of a continuous development by the Liebherr specialists and enables the adaption to the constantly increasing demands of the markets due to its modern and future oriented control.

The data bus technology

Liebherr mobile cranes are completely interlaced by the data bus system. All important electric and electronic components are equipped with own microprocessors and communicate with each other by only limited data cables. For the special demands of the mobile crane Liebherr has developed own data bus systems (LSB - Liebherr-System-Bus). The data bus technology improves the reliability, the comfort and the safety for road driving and crane operation:

- Higher reliability due to remarkable lesser electric cables and contacts
- Continuous self testing of the „intelligent sensors“
- Comprehensive diagnosis possibilities, fast fault finding

The LICCON work area limitation system (optional)

- Makes the crane operator's job easier by automatically monitoring workspace restrictions such as bridges, roofs, etc.
- Simple programming
- Four different limitation functions:
  - Pulley-head height limitation
  - Radius limitation
  - Slewing angle limitation
  - Edge limitation

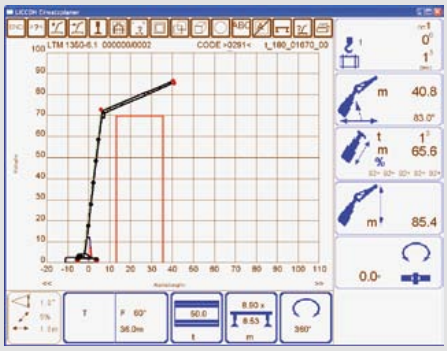

The LICCON work planner

- Computer programme for planning, simulating and documenting crane operations on a PC
- Representation of all the crane's load charts
- Automatic search for suitable crane based on load, radius and lifting height parameters
- Simulation of crane operations with outline functions and supporting force display

https://truckmanualshub.com/

LICCON2 – safe and comfortable

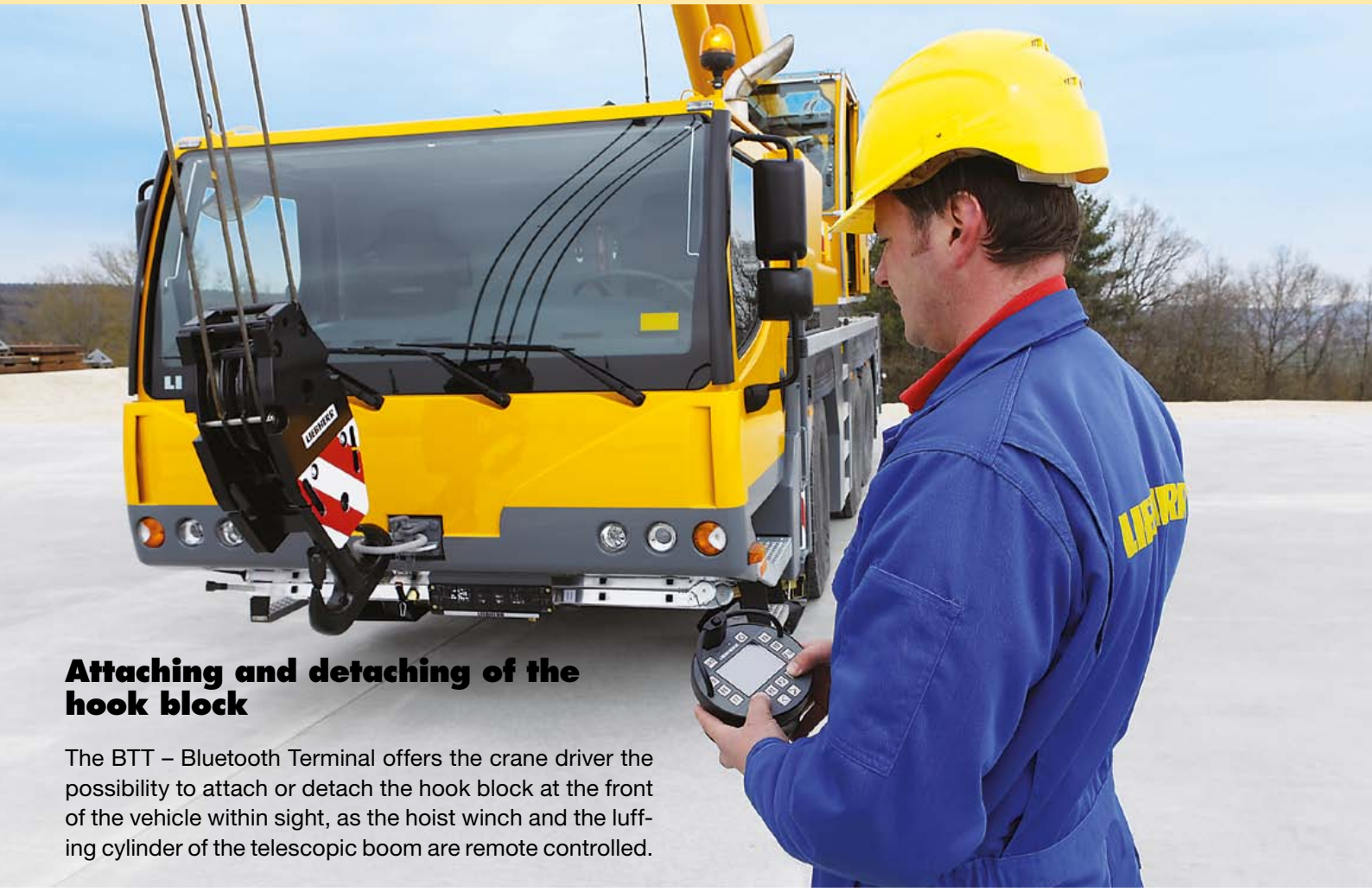

Attaching and detaching of the hook block

The BTT – Bluetooth Terminal offers the crane driver the possibility to attach or detach the hook block at the front of the vehicle within sight, as the hoist winch and the luffing cylinder of the telescopic boom are remote controlled.

Wireless remote control

Wireless remote control (option)

All crane motions can be controlled outside of the cab.

- Higher efficiency
- Free view and closeness to the load
- Prevention of communication errors between the crane driver and the job site personnel

Crane support

By use of the BTT the mobile crane will be setup comfortably and safely. Engine start/stop and speed regulation, electronic inclination display and automatic levelling are standard. Optionally the BTT can also display the outrigger forces.

Colour monitor

The readability of the data on the monitor of the LICCON2 control system in the crane cab is enhanced by the colour display. Warnings and crane utilization are considerably better recognized.

Touch displays

Below the joy sticks integrated in the armrests the touch displays are installed, with which the various operational functions can be selected. These are beside others the drive and steering programs of the chassis, the axle suspension, the supporting of the crane, the adjustment of the working floodlights as well as heater and air condition controls.

PN 207.00.E02.2012

The pictures contain also accessories and special equipment not included in the standard scope of delivery. Subject to modification

Liebherr-Werk Ehingen GmbH
Postfach 1361, 89582 Ehingen, Germany
☎ +49 7391 502-0, Fax +49 7391 502-33 99
www.liebherr.com, E-Mail: info.lwe@liebherr.com