https://truckmanualshub.com/

U.S.A. : **KUBOTA TRACTOR CORPORATION**
3401 Del Amo Blvd., Torrance, CA 90503, U.S.A.
Telephone : (310)370-3370
Western Division : 1175 S. Guild Avc., Lodi, CA 95240
Telephone : (209)334-9910
Central Division : 14855 FAA Blvd., Fort Worth, TX 76155
Telephone : (817)571-0900
Northern Division : 6300 at One Kubota Way, Groveport, OH 43125
Telephone : (614)835-1100
Southeast Division : 1025 Northbrook Parkway, Suwanee, GA 30024
Telephone : (770)995-8855

Canada : **KUBOTA CANADA LTD.**
5900 14th Avenue, Markham, Ontario, L3S 4K4, Canada
Telephone : (905)294-7477

France : **KUBOTA EUROPE S.A.S**
19-25, Rue Jules Vercruysse, Z.I. BP88, 95101 Argenteuil Cedex, France
Telephone : (33)1-3426-3434

Italy : **KUBOTA EUROPE S.A.S Italy Branch**
Via Grandi, 29 20068 Peschiera Borrome (MI) Italy
Telephone : (39)02-51650377

Germany : **KUBOTA (DEUTSCHLAND) GmbH**
Senefelder Str. 3-5 63110 Rodgau /Nieder-Roden, Germany
Telephone : (49)6106-873-0

U.K. : **KUBOTA (U.K.) LTD.**
Dormer Road, Thame, Oxfordshire, OX9 3UN, U.K.
Telephone : (44)1844-214500

Spain : **KUBOTA ESPAÑA S.A.**
Avenida Recomba No.5, Poligno Industrial la Laguna, Leganes, 28914 (Madrid) Spain
Telephone : (34)91-508-6442

Australia : **KUBOTA TRACTOR AUSTRALIA PTY LTD.**
25-29 Permas Way, Truganina, VIC 3029, Australia
Telephone : (61)-3-9394-4400

Malaysia : **SIME KUBOTA SDN. BHD.**
No.3 Jalan Sepadu 25/123 Taman Perindustrian Axis,
Seksyen 25, 40400 Shah Alam, Selangor Darul Ehsan Malaysia
Telephone : (60)3-736-1388

Philippines : **KUBOTA PHILIPPINES, INC.**
232 Quirino Highway, Baesa, Quezon City 1106, Philippines
Telephone : (63)2-422-3500

Taiwan : **SHIN TAIWAN AGRICULTURAL MACHINERY CO., LTD.**
16, Fengping 2nd Rd, Taliao Shiang Kaohsiung 83107, Taiwan R.O.C.
Telephone : (886)7-702-2333

Indonesia : **PT KUBOTA MACHINERY INDONESIA**
Tower A at EightyEight@Kasablanka Lantai 16
Jalan Raya Casablanka Kav. 88, Jakarta 12870 Indonesia
Telephone : (62)-21-29568-720

Thailand : **SIAM KUBOTA CORPORATION CO., LTD.**
101/19-24 Moo 20, Navanakorn Industrial Estate, Tambon Khlongnueng, Amphur Khlongluang,
Pathumthani 12120, THAILAND
Telephone : (66)2-909-0300

Korea : **KUBOTA KOREA CO., LTD.**
41-27, Jayumuyeok-gil, Baeksan-myeon, Gimje-si, Jeollabuk-do, Korea
Telephone : (82)-63-544-5822

India : **KUBOTA AGRICULTURAL MACHINERY INDIA PVT. LTD.**
No.15, Medavakkam Road, Sholinganallur, Chennai-600119, T.N., India
Telephone : (91)44-6104-1500

Vietnam : **KUBOTA VIETNAM CO., LTD.**
Lot B-3A2-CN, My Phuoc 3 Industrial Park, Ben Cat District, Binh Duong Province, Vietnam
Telephone : (84)-650-3577-507

KUBOTA Corporation

English (U.S.A.)
Code No. 3S205-9971-3

M6-101.M6-111.M6-131.M6-141

OPERATOR'S MANUAL

KUBOTA TRACTOR

MODELS M6-101·M6-111 M6-131·M6-141

1AGBEAAAP001A

READ AND SAVE THIS MANUAL

PRINTED IN JAPAN

© KUBOTA Corporation 2015

https://truckmanualshub.com/

ABBREVIATION LIST

Abbreviations	Definitions
2WD	2 Wheel Drive
4WD	4 Wheel Drive
API	American Petroleum Institute
ASABE	American Society of Agricultural and Biological Engineers, USA
ASTM	American Society for Testing and Materials, USA
DIN	Deutsches Institut für Normung, GERMANY
DEF	Diesel Exhaust Fluid
DPF	Diesel Particulate Filter
DT	Dual Traction [4WD]
fpm	Feet Per Minute
GST	Glide Shift Transmission
Hi-Lo	High Speed-Low Speed
HST	Hydrostatic Transmission
m/s	Meters Per Second
PTO	Power Take Off
RH/LH	Right-hand and left-hand sides are determined by facing in the direction of forward travel
ROPS	Roll-Over Protective Structures
rpm	Revolutions Per Minute
r/s	Revolutions Per Second
SAE	Society of Automotive Engineers, USA
SCR	Selective Catalytic Reduction
SMV	Slow Moving Vehicle

California Proposition 65

⚠ WARNING ⚠

Engine exhaust, some of its constituents, certain vehicle components and fluids, contain or emit chemicals known to the State of California to cause cancer and birth defects or other reproductive harm.

KUBOTA Corporation is ···

Since its inception in 1890, KUBOTA Corporation has grown to rank as one of the major firms in Japan.

To achieve this status, the company has through the years diversified the range of its products and services to a remarkable extent. 30 plants and 35,000 employees produce over 1,000 different items, large and small.

All these products and all the services which accompany them, however, are unified by one central commitment. KUBOTA makes products which, taken on a national scale, are basic necessities. Products which are indispensable. Products which are intended to help individuals and nations fulfill the potential inherent in their environment. KUBOTA is the Basic Necessities Giant.

This potential includes water supply, food from the soil and from the sea, industrial development, architecture and construction, and transportation.

Thousands of people depend on KUBOTA's know-how, technology, experience and customer service. You too can depend on KUBOTA.

https://truckmanualshub.com/

UNIVERSAL SYMBOLS

As a guide to the operation of your tractor, various universal symbols have been utilized on the instruments and controls. The symbols are shown below with an indication of their meaning.

■ General

- Safety Alert Symbol
- Master System Warning
- Fast
- Slow
- Creep
- Lock
- ON (Engaged)
- OFF (Disengaged)

■ Engine-related

- Diesel Fuel
- Empty
- Full
- Hourmeter/Elapsed Operating Hours
- Engine Coolant-Temperature
- Low Temperature Reguration
- Engine Intake/Combustion Air-Filter
- Engine Oil-Pressure
- Water Separator
- Engine-Warning
- Engine-Rotational Speed
- Engine-Rev Limiter
- Engine-Constant RPM management
- Engine-RPM Increase
- Engine-Run
- Engine-Start
- Engine-Stop
- Electrical Power-accessories
- Diesel Preheat/Glow Plugs (Low Temperature Start Aid)
- Emission Control
- Regeneration
- Regeneration inhibit
- Regeneration (Switch)
- Parked Regeneration
- DEF/AdBlue-Level
- DEF/AdBlue-Low Level
- DEF/AdBlue-Poor Quality
- DEF/AdBlue-Trouble
- DEF/AdBlue-Freeze

■ Vehicle body-related

- 4-Wheel Drive-On
- 4-Wheel Drive-Automatic
- Bi-Speed turn
- Auto-Transmission
- Clutch
- Brake
- Parking Brake
- Differential Lock-Front

Differential Lock-Rear

Steering Wheel-Tilt

Steering Wheel-Telescope

Front Suspension

■ PTO-related

PTO-Off (Disengaged)

PTO-On (Engaged)

540 PTO-540 rpm

1000 PTO-1000 rpm

1000E PTO-1000E rpm

■ Hydraulic-related

Draft Control

Position Control-Raised Position

Position Control-Lowered Position

3-Point Lifting/Lowering

Lift Arm-Height

Remote Cylinder-Retract

Remote Cylinder-Extend

Remote Cylinder-Float

■ Electric-related

Battery Charging Condition

Headlight-Low Beam

Headlight-High Beam

Turn Signal

Hazard Warning Lights

Audible Warning Device

Windshield Wiper

Windshield Wiper-Intermittent

Windshield Washer

Rear Window Defroster

Side Window Defroster

https://truckmanualshub.com/

FOREWORD

You are now the proud owner of a KUBOTA Tractor. This tractor is a product of KUBOTA quality engineering and manufacturing. It is made of fine materials and under a rigid quality control system. It will give you long, satisfactory service. To obtain the best use of your tractor, please read this manual carefully. It will help you become familiar with the operation of the tractor and contains many helpful hints about tractor maintenance. It is KUBOTA's policy to utilize as quickly as possible every advance in our research. The immediate use of new techniques in the manufacture of products may cause some small parts of this manual to be outdated. KUBOTA distributors and dealers will have the most up-to-date information. Please do not hesitate to consult with them.

SAFETY FIRST

This symbol, the industry's "Safety Alert Symbol", is used throughout this manual and on labels on the machine itself to warn of the possibility of personal injury. Read these instructions carefully. It is essential that you read the instructions and safety regulations before you attempt to assemble or use this unit.

DANGER : Indicates an imminently hazardous situation which, if not avoided, will result in death or serious injury.

WARNING : Indicates a potentially hazardous situation which, if not avoided, could result in death or serious injury.

CAUTION : Indicates a potentially hazardous situation which, if not avoided, could result in minor or moderate injury.

IMPORTANT : Indicates that equipment or property damage could result if instructions are not followed.

NOTE : Gives helpful information.

https://truckmanualshub.com/

https://truckmanualshub.com/

CONTENTS

⚠SAFE OPERATION ..... ⚠-1

SERVICING OF TRACTOR 1

SPECIFICATIONS 3
- SPECIFICATION TABLE 3
- TRAVELING SPEEDS 5

IMPLEMENT LIMITATIONS 6

INSTRUMENT PANEL AND CONTROLS 8

PRE-OPERATION CHECK 12
- DAILY CHECK 12

OPERATING THE ENGINE 13
- EXHAUST AFTERTREATMENT DEVICES 13
  - Dual Exhaust Aftertreatment Devices 13
- DIESEL PARTICULATE FILTER (DPF) MUFFLER 14
  - Handling Points 14
  - DPF Regeneration Process 14
  - Operating Procedure for Auto Regeneration Mode 15
  - Operating Procedure for Regeneration Inhibit Mode 17
  - Operating Procedure for Parked Regeneration 19
  - Tips on Diesel Particulate Filter (DPF) Regeneration 21
- SELECTIVE CATALYTIC REDUCTION (SCR) MUFFLER 21
  - Outline of the SCR 21
  - DEF/AdBlue® 22
  - Warning Indication and its Countermeasure 22
  - Storing and Handling DEF/AdBlue® 27
- STARTING THE ENGINE 27
- COLD WEATHER STARTING 32
  - Block Heater (if equipped) 32
- STOPPING THE ENGINE 32
- WARMING UP 33
  - Warm-up and Transmission Oil at Low Temperature Range 33
- JUMP STARTING 33

OPERATING THE TRACTOR 34
- OPERATING NEW TRACTOR 34
  - Do not Operate the Tractor at Full Speed for the First 50 Hours. 34
  - Changing Lubricating Oil for New Tractors 34
- BOARDING AND LEAVING THE TRACTOR 34
- STARTING 34
  - Operator's Seat 34
  - Seat Belt 36
  - Instructional Seat 36
  - Steering Adjustment 37
  - Extendable Mirror 37
  - Light Switch 38

https://truckmanualshub.com/

Turn Signal / Hazard Light Switch 38
Horn Button 39
Work Light Switch (Front) 39
Work Light Switch (Rear) 39
Brake Pedals (Right and Left) 40
Clutch Pedal 41
Power Shift / Range Shift Lever (PS. Lever) 42
DHC switch 44
Shuttle Lever 44
Creep Lever (if equipped) 45
4WD / Auto 4WD Switch 45
Bi-speed Turn Switch 46
Hand Throttle Lever 49
Foot Throttle 49
Rev-limiter Control Dial 49
Parking Brake Lever 49
STOPPING 49
Stopping 49
CHECK DURING DRIVING 50
Immediately Stop the Engine if: 50
Easy Checker(TM) 50
Fuel Gauge 51
DEF / AdBlue® Gauge 51
Coolant Temperature Gauge 52
Tachometer 52
LCD MONITOR 53
Performance Monitor 54
SIDE DIGITAL DISPLAY 55
Initial Setting 55
Factory-set Screen Display 57
ELECTRONIC ENGINE CONTROL 59
Rev-limiter Control Setting 59
RPM Dual Memory Setting 59
Constant RPM Management Control 62
AUTO MODE 63
Outline 63
Operation 65
Work Speed Display 66
Changing the Field Speed 67
Sensitivity Adjustment 68
Changing the Auto-Mode Setting 68
FRONT SUSPENSION 71
Outline 71
Suspension Switch 71
Ride Condition Damper Switch 73
Manual Control Mode 73
PARKING 74
Parking 74
OPERATING TECHNIQUES 74
Differential Lock 74
Rear Wheel Differential Lock Pedal 75
Front Wheel Differential Lock Switch 75

Operating the Tractor on a Road 76
Operating on Slopes and Rough Terrain 76
Transport the Tractor Safely 76
Directions for Use of Power Steering 76
Trailer Electrical Outlet 77

PTO 78
PTO OPERATION 78
PTO Clutch Control Switch 78
1000 rpm PTO Shaft 79
PTO Shaft Cover and Shaft Cap 80

3-POINT HITCH & DRAWBAR 81
3-POINT HITCH 82
Selecting the holes of Lower Links 82
Adjusting Lateral Float 82
Selecting the Top Link Mounting Holes 82
Drawbar 82
Remote Hitch UP / DOWN Switch 83
Lifting Rod (Left) 83
Lifting Rod (Right) 84
Top Link 84
Telescopic Stabilizers 84
Telescopic Lower Links 85
DRAWBAR 85
Adjusting Drawbar Length 85
Swing Drawbar 85

HYDRAULIC UNIT 86
3-POINT HITCH CONTROL SYSTEM 86
Terminology 86
Mode Selector Switch 87
Position Control Mode 87
Mixed Draft Control Mode 88
Float Control 88
Bottom Limit Control Dial 89
Lift Arm Top Limit Adjustment Dial 89
3-Point Hitch Lowering Speed Adjustment Dial 89
3-Point Hitch Lowering Lock Lever 90
3-P. Quick Raise / Lower Switch 90
3-Point Hitch's Position Lock 91
REMOTE HYDRAULIC CONTROL SYSTEM 91
Remote Control Valve 91
Remote Control Valve Lever 91
Remote Control Valve Coupler Connecting and Disconnecting 92
Adjusting the flow rate 93
Remote Couplers Spillage Collector 94
Hydraulic Control Unit Use Reference Chart 95

TIRES, WHEELS AND BALLAST 96
TIRES 96
Inflation Pressure 96
Dual Tires 96

https://truckmanualshub.com/

WHEEL ADJUSTMENT 97
Front Wheels (with 4-wheel drive) 97
Adjusting Front Wheel Turning Stopper Bolt 98
Rear Wheels 99
BALLAST 101
Front Ballast 101
Rear Ballast 102

CAB OPERATION 103
DOOR AND WINDOW 103
Locking and Unlocking the Door 103
Opening the Door 103
Rear Window 103
Sun Roof 104
Emergency Exit 104
DOME LIGHT 104
Dome Light 104
WIPER 104
Front Wiper / Washer Switch 104
Rear Wiper / Washer Switch 105
Using the Wipers in Cold Season 105
AIR CONDITIONER 105
Airflow 105
Air Control Vent 106
Control Panel 106
Operation 107
REAR DEFOGGER WITH TIMER (if equipped) 109
INSTALLING THE IMPLEMENT CONTROL BOX 109
ELECTRICAL OUTLET 110
Electrical Outlet 110

MAINTENANCE 111
SERVICE INTERVALS 111
Maintenance Items Chart 113
LUBRICANTS, FUEL AND COOLANT 114

PERIODIC SERVICE 116
HOW TO OPEN THE HOOD 116
Hood 116
Side Cover 116
DAILY CHECK 117
Walk Around Inspection 117
Checking and Refueling 117
Checking the DEF/AdBlue® level and adding the fluid 118
Checking Water Separator 119
Checking Engine Oil Level 120
Checking Transmission Fluid Level 120
Checking Coolant Level 121
Cleaning Evacuator Valve 121
Cleaning Grill, Radiator and Screen 122
Checking DPF/SCR Muffler 123
Checking Brake Pedal 123
Checking Gauges, Meter and Easy Checker(TM) 124

Checking Head Light, Turn Signal / Hazard Light etc. 124
Checking Seat Belt 124
Checking Movable Parts 124
INITIAL 50 HOURS 124
Changing Engine Oil 124
Replacing Engine Filter 124
Checking Fan / Air-conditioner Belt Tension 124
EVERY 50 HOURS 124
Checking Engine Start System 124
Checking Wheel Bolt Torque 125
Checking Tie-rod Dust Cover 126
EVERY 100 HOURS 126
Lubricating Grease Fittings 126
Cleaning Air Cleaner Primary Element 128
Adjusting Fan Belt Tension 129
Adjusting Brake Pedal 129
Adjusting Parking Brake Lever 130
Checking Battery Condition 131
Adjusting Air-Conditioner Belt Tension 133
EVERY 200 HOURS 133
Adjusting Toe-in 133
Draining Fuel Tank Water 134
Cleaning Inner Air Filter 134
Cleaning Fresh Air Filter 135
EVERY 400 HOURS 136
Checking Fan / Air-conditioner Belt Tension 136
Cleaning Water Separator 137
Cleaning Fuel Solenoid Pump Element 138
EVERY 500 HOURS 138
Changing Engine Oil 138
Replacing Engine Oil Filter 139
Cleaning Pre-Fuel Filter 140
Replacing Fuel Filter 140
Replacing Hydraulic Oil Filter 141
Checking Power Steering Line 142
Checking Radiator Hose and Clamp 142
Checking Fuel Line 144
Checking Intake Air Line 144
Checking Oil Cooler Line 145
Adjusting Power Shift 145
Checking Air Conditioner Pipe and Hose 145
EVERY 600 HOURS 145
Adjusting Front Axle Pivot 145
Adjusting King-pin Pivot 146
EVERY 1000 HOURS 146
Changing Transmission Fluid 146
Changing Front Differential Case Oil 147
Changing Front Axle Gear Case Oil 147
Adjusting Engine Valve Clearance 147
EVERY 1000 HOURS or 1 YEAR 148
Replacing Air Cleaner Primary Element and Secondary Element 148
Checking Exhaust Manifold 148

https://truckmanualshub.com/

EVERY 1500 HOURS 148
Cleaning Fuel Injector Nozzle Tip 148
Checking DEF/AdBlue® Injector Tip 148
Checking DEF/AdBlue® Line 148
Replacing Oil Separator Element 148
Checking PCV (Positive Crankcase Ventilation) Valve 148
Checking and Cleaning EGR Cooler 148
Checking Accumulator 148
EVERY 2000 HOURS or 2 YEARS 149
Flushing Cooling System and Changing Coolant 149
Anti-Freeze 150
EVERY 3000 HOURS 151
Checking Turbocharger 151
Checking Supply Pump 151
Checking Intake Air Heater 151
Checking and Cleaning EGR System 151
Cleaning DPF Muffler 151
Checking DEF/AdBlue® injector 151
Replacing DEF/AdBlue® Pump Filter 151
EVERY 8000 HOURS 152
Cleaning DPF Muffler 152
EVERY 9000 HOURS 152
Replacing DEF/AdBlue® Tank Filter 152
EVERY 1 YEAR 152
Checking Antifrost Heater for Oil Separator 152
Checking CAB Isolation Cushion 152
Checking DPF Differential Pressure Sensor Pipe 152
Checking EGR Pipe 152
EVERY 2 YEARS 152
Replacing PCV (Positive Crankcase Ventilation) Valve Hose 152
Replacing DPF Differential Pressure Sensor Hose 152
Replacing Boost Sensor Hose 152
Replacing Brake Hose 152
Replacing Clutch Hose 152
Replacing Differential Lock Hose 152
EVERY 3 YEARS 152
Replacing Parking Brake Cable 152
EVERY 4 YEARS 153
Replacing Radiator Hose (Water pipes) 153
Replacing Fuel Hose 153
Replacing Intake Air Line 153
Replacing Oil Cooler Line 153
Replacing Power Steering Hose 153
Replacing Lift Cylinder Hose 153
Replacing Suspension Hose 153
Replacing Master Cylinder Kit 153
Replacing Equalizer Kit 153
Replacing Brake Seal 1 and 2 153
Replacing Air Conditioner Hose 153
SERVICE AS REQUIRED 153
Bleeding Fuel System 153
Bleeding Brake System 154

https://truckmanualshub.com/

Draining Clutch Housing Water 154
Replacing Fuse 155
Replacing Slow-Blow Fuses 157
Replacing Light Bulb 159
Replacing Head Lamp 159
Lubricating Points 159
Adding Washer Liquid 160
Checking the Amount of Refrigerant (gas) 160

STORAGE 161
TRACTOR STORAGE 161
REMOVING THE TRACTOR FROM STORAGE 161

TROUBLESHOOTING 162
ENGINE TROUBLESHOOTING 162
POWER SHIFT/RANGE SHIFT TROUBLE SHOOTING 164

OPTIONS 166

APPENDICES 167
SIDE DIGITAL DISPLAY 167
Changing the Information Displayed 167
Information Displayed and its Handling 168
Displaying and Using the Work History 171
Measuring the Distance 173
Changing the Units and Dates 173
INDEX 175

https://truckmanualshub.com/

https://truckmanualshub.com/

SAFE OPERATION

Careful operation is your best insurance against an accident.

Read and understand this manual carefully before operating the tractor.

All operators, no matter how much experience they may have, should read this and other related manuals before operating the tractor or any implement attached to it. It is the owner's obligation to instruct all operators in safe operation.

1. BEFORE OPERATING THE TRACTOR

1. Know your equipment and its limitations. Read this entire manual before attempting to start and operate the tractor.
2. Pay special attention to the danger, warning and caution labels on the tractor.
3. Do not operate the tractor or any implement attached to it while under the influence of alcohol, medication, controlled substances or while fatigued.
4. Before allowing other people to use your tractor, explain how to operate and have them read this manual before operation.
5. Never wear loose, torn, or bulky clothing around tractor. It may catch on moving parts or controls, leading to the risk of an accident. Use additional safety items, e.g. hard hat, safety boots or shoes, eye and hearing protection, gloves, etc., as appropriate or required.
6. Do not allow passengers to ride on any part of the tractor at anytime. The operator must remain in the tractor seat during operation.
7. Check brakes, clutch, linkage pins and other mechanical parts for improper adjustment and wear. Replace worn or damaged parts promptly. Check the tightness of all nuts and bolts regularly. (For further details, see "MAINTENANCE" section.)
8. Keep your tractor clean. Dirt, grease, and trash build up may contribute to fires and lead to personal injury.
9. Use only implements meeting the specifications listed under "IMPLEMENT LIMITATIONS" in this manual or implements approved by KUBOTA.
10. Use proper weights on the front or rear of the tractor to reduce the risk of upsets. When using the front loader, put an implement or ballast on the 3-point hitch to improve stability. Follow the safe operating procedures specified in the implement or attachment manual.
11. The narrower the tread, the greater the risk of a tractor upset. For maximum stability, adjust the wheels to the widest practical tread width for your application. (See "TIRES, WHEELS AND BALLAST" section.)

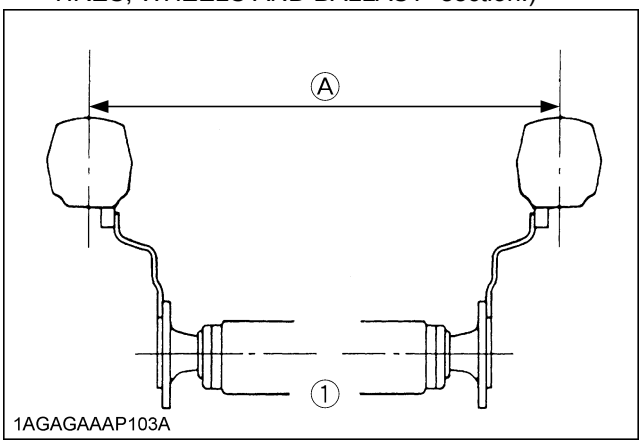

(1) Rear wheels *(A) Tread Width*

12. Do not modify the tractor. Unauthorized modification may affect the function of the tractor, which may result in personal injury.

◆ **CAB, ROPS**

1. KUBOTA recommends the use of a CAB or Roll Over Protective Structures (ROPS) and seat belt in almost all applications. This combination will reduce the risk of serious injury or death, should the tractor be upset. Check for overhead clearance which may interfere with a CAB or ROPS.
2. If the CAB or ROPS is loosened or removed for any reason, make sure that all parts are reinstalled correctly before operating the tractor.
3. Never modify or repair any structural member of a CAB or ROPS because welding, bending, drilling, grinding, or cutting may weaken the structure.
4. A damaged CAB or ROPS structure must be replaced, not repaired or revised.
5. If any structural member of the CAB or ROPS is damaged, replace the entire structure at your local KUBOTA Dealer.
6. Always use the seat belt if the tractor has a CAB or ROPS. Do not use the seat belt if there is no CAB or ROPS. Check the seat belt regularly and replace if frayed or damaged.

https://truckmanualshub.com/

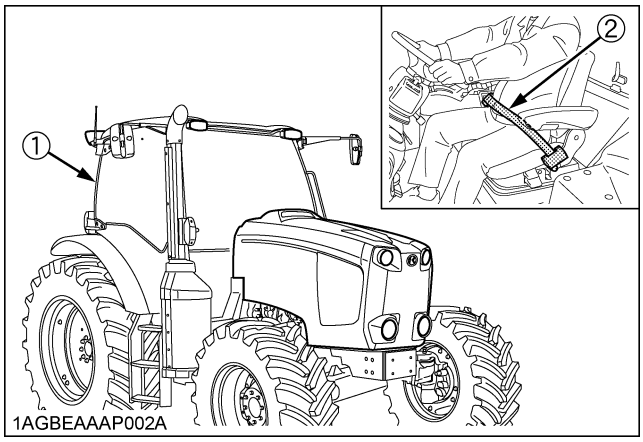

(1) CAB
(2) Seat belt

2. OPERATING THE TRACTOR

Operator safety is a priority. Safe operation, specifically with respect to overturning hazards, entails understanding the equipment and environmental conditions at the time of use. Some prohibited uses which can affect overturning hazards include traveling and turning with implements and loads carried too high etc. This manual sets forth some of the obvious risks, but the list is not, and cannot be, exhaustive. It is the operator's responsibility to be alert for any equipment or environmental condition that could compromise safe operation.

◆ **Starting**

1. Always sit in the operator's seat when starting engine or operating levers or controls. Adjust seat per instructions in the operating the tractor section. Never start engine while standing on the ground.
2. Before starting the engine, make sure that all levers (including auxiliary control levers) are in their neutral positions, that the parking brake is engaged, and that both the clutch and the Power Take-Off (PTO) are disengaged or "OFF".
   Fasten the seat belt if the tractor has a CAB, a fixed ROPS or a foldable ROPS in the upright and locked position.
3. Do not start engine by shorting across starter terminals or bypassing the safety start switch. Machine may start in gear and move if normal starting circuitry is bypassed.
4. Do not operate or idle engine in a non-ventilated area. Carbon monoxide gas is colorless, odorless, and deadly.
5. Check before each use that operator presence controls are functioning correctly. Test safety systems. (See "Checking Engine Start System" in "EVERY 50 HOURS" in "PERIODIC SERVICE" section.)
   Do not operate unless they are functioning correctly.

◆ **Working**

1. Pull only from the drawbar. Never hitch to axle housing or any other point except drawbar; such arrangements will increase the risk of serious personal injury or death due to a tractor upset.

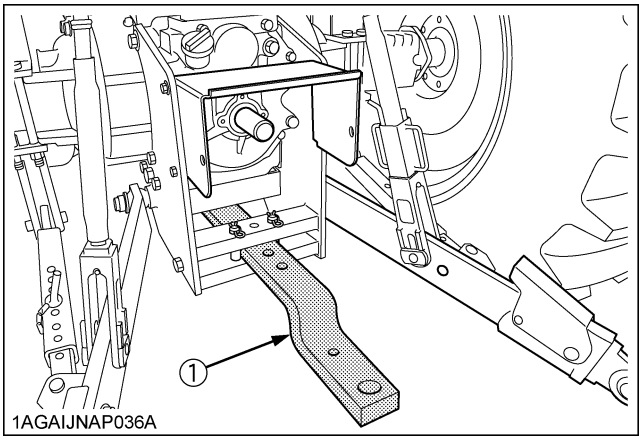

(1) Drawbar

2. For trailing PTO-driven implements, set the drawbar to the towing position.
3. Attach pulled or towed loads to the drawbar only.
4. Keep all shields and guards in place. Replace any that are missing or damaged.
5. Avoid sudden starts. To avoid upsets, slow down when turning, on uneven ground, and before stopping.
6. The tractor cannot turn with the rear wheel or 4-wheel differential locked and attempting to do so could be dangerous.
7. Do not operate near ditches, holes, embankments, or other ground surface features which may collapse under the tractor's weight. The risk of tractor upset is even higher when the ground is loose or wet. Tall grass can hide obstacles, walk the area first to be sure.
8. Watch where you are going at all times. Watch for and avoid obstacles. Be alert at row ends, near trees, and other obstructions.
9. When working in groups, always let the others know what you are going to do before you do it.
10. Never try to get on or off a moving tractor.
11. Always sit in the operator's seat when operating levers or controls.
12. Do not use "Bi-speed Turn" at high speed.
13. "Bi-Speed Turn" enables short and fast turns, therefore, become familiar with its performance before operating in close or confined areas.
14. Do not stand between tractor and implement or trailed vehicle unless parking brake is applied.

https://truckmanualshub.com/

◆ **Instructional seat (if equipped)**

1. Always wear your seat belt and stabilize your body by holding the handrail on the CAB frame.
2. It is not intended to carry children nor any other person for any other purpose.
3. The left hand door must be closed at all time whenever the instructional seat is occupied and the tractor is in motion.
4. Do not permit others to ride, except on the designated instructional seat.
5. Use caution to avoid the risks of obstructing operator's view, falling from the machine and interfering with controls.
6. Do not start and stop the tractor suddenly, nor take sharp turn.
7. Do not use the instructional seat if the seat belt or the door lock fails to function.
8. Do not use the instructional seat for transport.
9. When opening and closing the door from the instructional-seat-sitting position, move the door slowly. This is to prevent his or her hand(s) from getting caught by the door or his or her body to hit against the door.

◆ **Safety for children**

Tragedy can occur if the operator is not alert to the presence of children. Children generally are attracted to machines and the work they do.

1. Never assume that children will remain where you last saw them.
2. Keep children out of the work area and under the watchful eye of another responsible adult.
3. Be alert and shut your machine down if children enter the work area.
4. Never carry children on your machine. There is no safe place for them to ride. They may fall off and be run over or interfere with your control of the machine.
5. Never allow children to operate the machine even under adult supervision.
6. Never allow children to play on the machine or on the implement.
7. Use extra caution when backing up. Look behind and down to make sure area is clear before moving.

◆ **Operating on slopes**

Slopes are a major factor related to loss-of-control and tip-over accidents, which can result in severe injury or death. All slopes require extra caution.

1. To avoid upsets, always back up steep slopes. If you cannot back up the slope or if you feel uneasy on it, do not operate on it. Stay off slopes too steep for safe operation.
2. Driving forward out of a ditch, mired condition or up a steep slope increases the risk of a tractor to be upset backward. Always back out of these situations. Extra caution is required with 4-wheel drive models because their increased traction can give the operator false confidence in the tractor's ability to climb slopes.
3. Keep all movement on slopes slow and gradual. Do not make sudden changes in speed, direction or apply brake and make sudden motions of the steering wheel.
4. Avoid disengaging the clutch or changing gears speed when climbing or going down a slope. If on a slope disengaging the clutch or changing gears to neutral could cause loss of control.
5. Special attention should be made to the weight and location of implements and loads as such will affect the stability of the tractor.
6. To improve stability on slope, set widest wheel tread as shown in "TIRES, WHEELS AND BALLAST" section.
   Follow recommendations for proper ballasting.
7. To avoid free wheeling:
   - Do not shift the shuttle lever while on a slope.
   - Stop completely by using the brake and by depressing the clutch pedal, then shift the shuttle lever.
   - Start off after selecting shuttle direction, by releasing the clutch pedal.

◆ **Driving the tractor on the road**

1. Lock the 2 brake pedals together to help assure straight-line stops. Uneven braking at road speeds could cause the tractor to tip over.

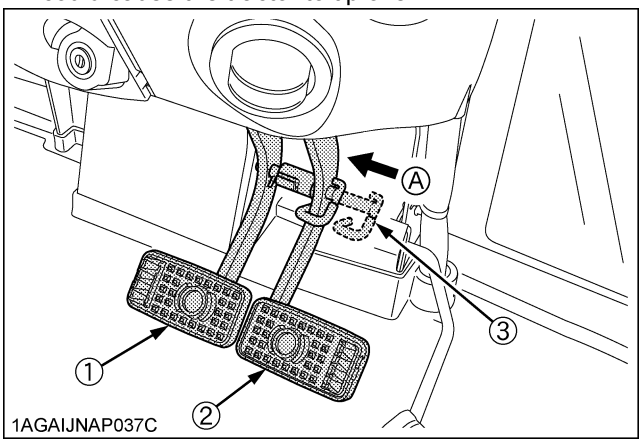

(1) Brake Pedal (LH)
(2) Brake Pedal (RH)
(3) Brake Pedal Lock
(A) Whenever travelling on the road

2. Check the front wheel engagement. The braking characteristics are different between 2 and 4-wheel drive. Be aware of the difference and use carefully.
3. Always slow the tractor down before turning. Turning at high speed may tip the tractor over.

https://truckmanualshub.com/

4. Make sure that the Slow Moving Vehicle (SMV) sign is clean and visible. Use hazard lights and turn signals as required.

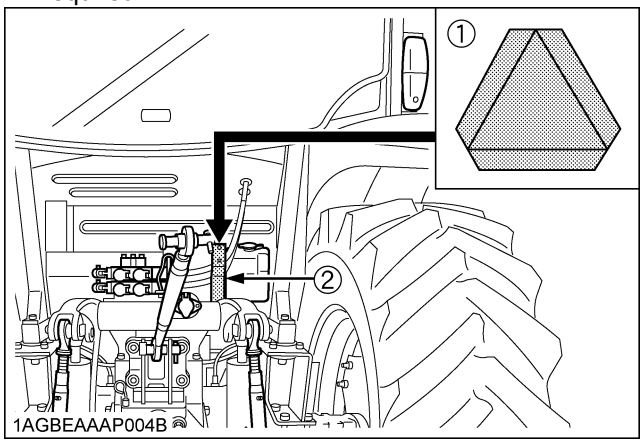

(1) SMV emblem
(2) Bracket

5. Observe all local traffic and safety regulations.
6. Turn the headlights on. Dim them when meeting another vehicle.
7. Drive at speeds that allow you to maintain control at all times.
8. Do not apply the differential lock while traveling at road speeds. The tractor may run out of control.
9. Avoid sudden motions of the steering wheel as they can lead to a dangerous loss of stability. The risk is especially great when the tractor is traveling at road speeds.
10. Do not operate an implement while the tractor is on the road. Lock the 3-point hitch in the raised position.
11. When towing other equipment, use a safety chain and place an SMV emblem on it as well.

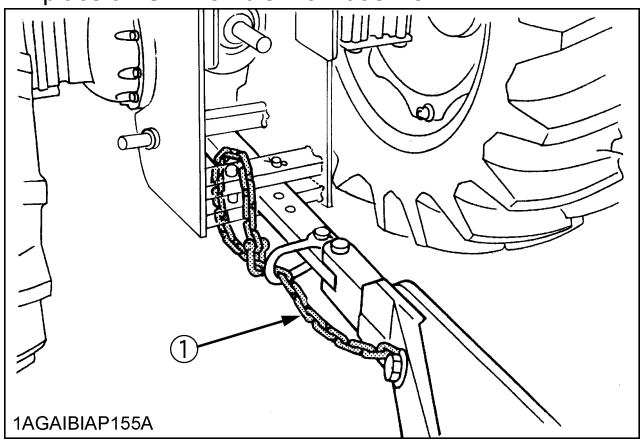

(1) Safety chain

12. Set the implement lowering control in the "LOCK" position to hold the implement in the raised position.

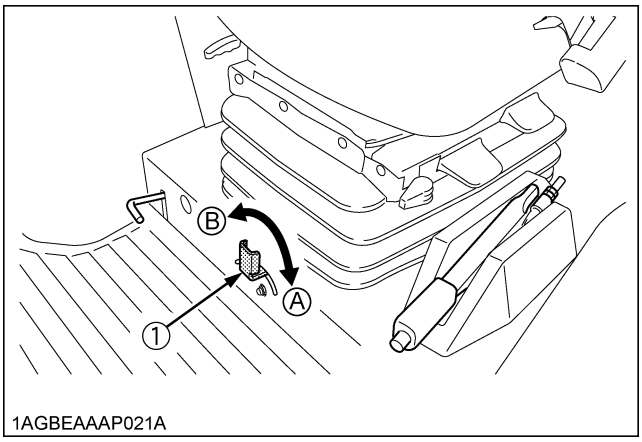

(1) 3-point hitch lowering lock lever
(A) "LOCK"
(B) "UNLOCK"

3. PARKING THE TRACTOR

1. Disengage the PTO, lower all implements to the ground, place all control levers in their neutral positions, set the parking brake, stop the engine, remove the key from the ignition and lock the cab door (if equipped). Leaving transmission in gear with the engine stopped will not prevent tractor from rolling.
2. Make sure that the tractor has come to a complete stop before dismounting.
3. Avoid parking on steep slopes, if at all possible park on a firm and level surface; if not, park across a slope and chock the wheels.
   Failure to comply with this warning may allow the tractor to move and could cause injury or death.

https://truckmanualshub.com/

4. OPERATING THE PTO

1. Wait until all moving components have completely stopped before getting off the tractor, connecting, disconnecting, adjusting, cleaning, or servicing any PTO driven equipment.
2. Keep the PTO shaft cover in place at all times. Replace the PTO shaft cap when the shaft is not in use.

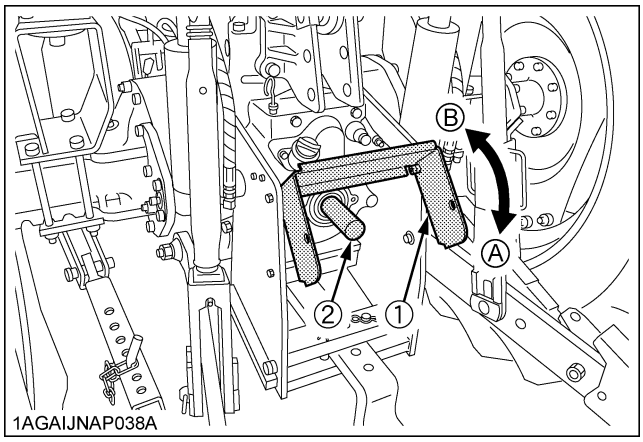

(1) PTO Shaft cover *(A) "NORMAL POSITION"*
(2) PTO Shaft cap *(B) "RAISED POSITION"*

3. Before installing or using PTO driven equipment, read the manufacturer's manual and review the safety labels attached to the equipment.
   To prevent PTO driven equipment from improper or unsafe use, select the lower speed (540rpm) unless the higher one is specifically recommended as safe by the equipment manufacturer.
4. When operating stationary PTO driven equipment, always apply the tractor parking brake and place chocks behind and in front of the rear wheels. Stay clear of all rotating parts. Never step over rotating parts.

5. USING 3-POINT HITCH

1. Use the 3-point hitch only with equipment designed for 3-point hitch usage.
2. When using a 3-point hitch mounted implement, be sure to install the proper counterbalance weight on the front of the tractor.
3. To avoid injury from separation:
   Do not extend lift rod beyond the groove on the threaded rod.

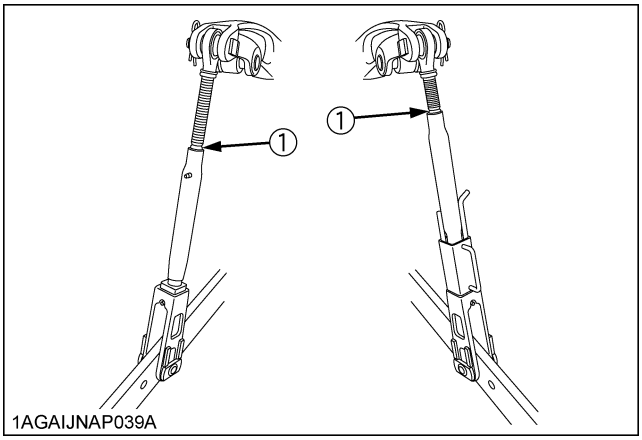

(1) Groove

4. Use [UP-DOWN] switch or lever only on farm fields. For all other application, use hydraulic lever to move attachment.

6. SERVICING THE TRACTOR

Before servicing the tractor, park it on a firm, flat and level surface, set the parking brake, lower all implements to the ground, place the gear shift lever in neutral, stop the engine and remove the key.

1. Allow the tractor time to cool off before working on or near the engine, muffler, radiator, etc.
2. Do not remove radiator cap while coolant is hot. When cool, slowly rotate cap to the first stop and allow sufficient time for excess pressure to escape before removing the cap completely. If the tractor has a coolant recovery tank, add coolant or water to the tank, not the radiator. (See "Checking Coolant Level" in "DAILY CHECK" in "PERIODIC SERVICE" section.)
3. Always stop the engine before refueling. Avoid spills and overfilling.
4. Do not smoke when working around battery or when refueling. Keep all sparks and flames away from battery and fuel tank. The battery presents an explosive hazard, because it gives off hydrogen and oxygen especially when recharging.
5. Before "jump starting" a dead battery, read and follow all of the instructions. (See "JUMP STARTING" in "OPERATING THE ENGINE" section.)

https://truckmanualshub.com/

6. Keep first aid kit and fire extinguisher handy at all times.
7. Disconnect the battery's ground cable before working on or near electric components.
8. To avoid the possibility of battery explosion, do not use or charge the refillable type battery if the fluid level is below the LOWER (lower limit level) mark. Check the fluid level regularly and add distilled water as required so that the fluid level is between the UPPER and LOWER levels.
9. To avoid sparks from an accidental short circuit, always disconnect the battery's ground cable (-) first and reconnect it last.

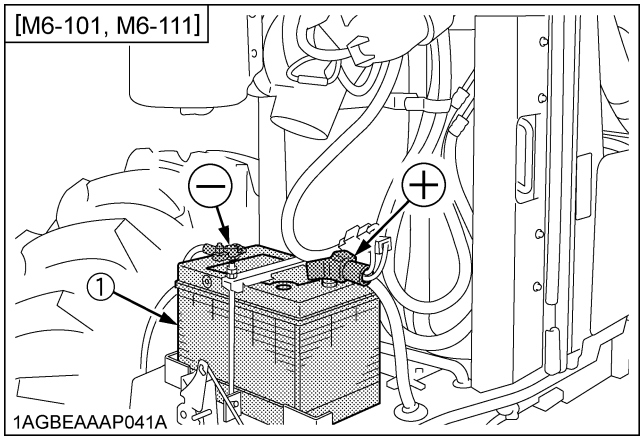

(1) Battery

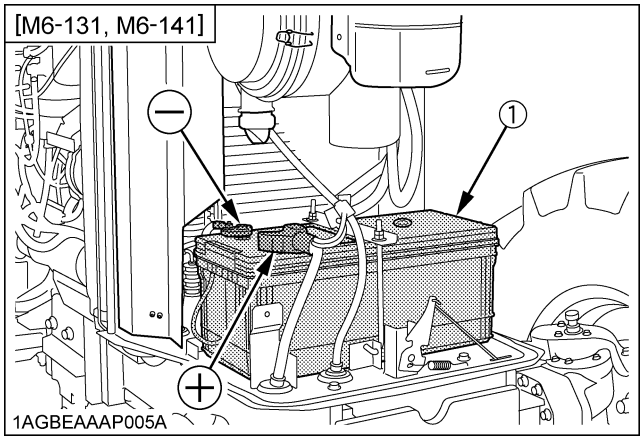

(1) Battery

10. Do not attempt to mount a tire on a rim. This should be done by a qualified person with the proper equipment.
11. Always maintain the correct tire pressure. Do not inflate tires above the recommended pressure shown in the operator's manual.

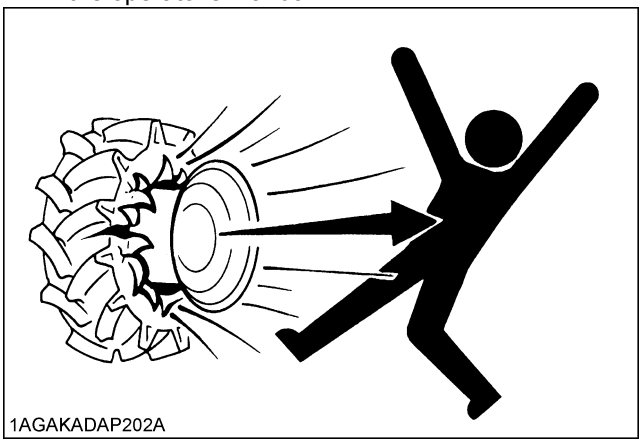

12. Securely support the tractor when either changing wheels or adjusting the wheel tread width.
13. Make sure that wheel bolts have been tightened to the specified torque.
14. Disconnect the battery's ground cable and stop the engine to avoid the possibility of the machine runaway due to 4WD braking system during testing, service or repair with only rear wheels off the ground.
15. Do not work under any hydraulically supported devices. They can settle, suddenly leak down, or be accidentally lowered. If it is necessary to work under tractor or any machine elements for servicing or adjustment, securely support them with stands or suitable blocking beforehand.
16. Escaping hydraulic fluid under pressure has sufficient force to penetrate skin, causing serious personal injury. Before disconnecting hydraulic lines, be sure to release all residual pressure. Before applying pressure to the hydraulic system, make sure that all connections are tight and that all lines, pipes, and hoses are free of damage.

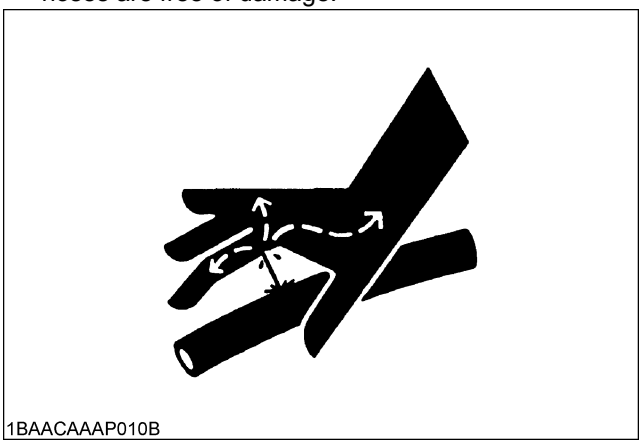

https://truckmanualshub.com/

17. Fluid escaping from pinholes may be invisible. Do not use hands to search for suspected leaks; use a piece of cardboard or wood. Use of safety goggles or other eye protection is also highly recommended. If injured by escaping fluid, see a medical doctor at once. This fluid will produce gangrene or severe allergic reaction.

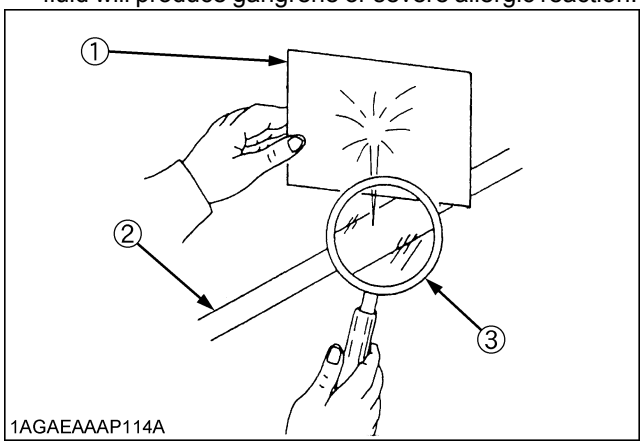

(1) Cardboard
(2) Hydraulic line
(3) Magnifying glass

18. Do not open high-pressure fuel system.
    High-pressure fluid remaining in fuel lines can cause serious injury. Do not disconnect nor attempt to repair fuel lines, sensors, or any other components between the high-pressure fuel pump and injectors on engines with high pressure common rail fuel system.
19. To avoid hazardous high voltage, turn the key switch to the OFF position if it is necessary to check to repair the computer, harness or connectors.
20. During Diesel Particulate Filter (hereinafter called DPF) regenerating operations, exhaust gases and exhaust filter components reach temperatures hot enough to burn people, or ignite or melt common materials.
21. Keep the tractor away from people, animals or structures which may be susceptible to harm or damage from hot exhaust gases.
22. To prevent fires, keep the DPF/SCR muffler and its surroundings clear of anything flammable and keep clean at all times. [Selective Catalytic Reduction (hereinafter called SCR)]
23. During regeneration, white exhaust gas may be visible. Do not allow regeneration in a non-ventilated space.
24. During regeneration, do not leave the tractor.
25. Before servicing a tractor equipped with the front suspension, be sure to lower the machine to the lowest position.
26. The front suspension hydraulic circuit is still under high pressure after the engine has stopped. Do not disconnect the pipes and/or hoses because you may get injured by high-pressure oil. If pipes and/or hoses are found worn or damaged, consult your local KUBOTA Dealer for this service.

https://truckmanualshub.com/

7. DANGER, WARNING AND CAUTION LABELS

(1) Part No. 3S205-4957-2
Do not get your hands close to engine fan and fan belt.

1AGAIAZAP110A

(2) Part No. 3N300-4958-1
Do not touch hot surface like muffler, etc.

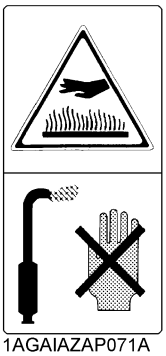

1AGAIAZAP071A

(3) Part No. 3N600-4958-1
Do not touch hot surface like supply pump, etc.

1AGAIDXAP073A

(4) Part No. 3S205-9868-1

⚠WARNING

TO AVOID PERSONAL INJURY OR DEAH:
When the Diesel Particulate Filter(DPF) is in the regenerating mode, the exhaust gas and the DPF muffler become hot.
During regeneration,take into account that the muffler will be very hot and keep the machine away from other people, animals,plants,and flammable material.
Also keep the area near the DPF muffler clean and away from flammable material.

1AGBEAAAP063A

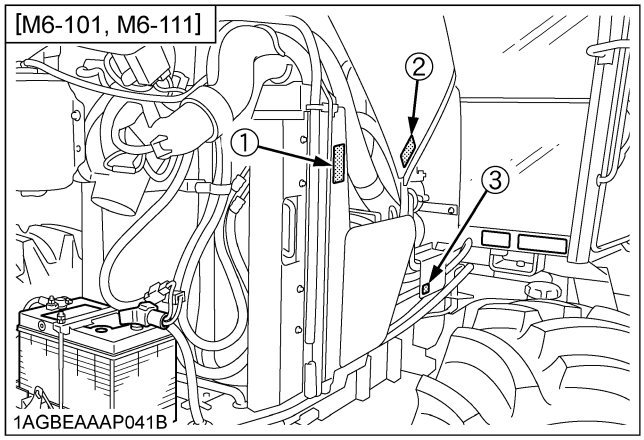

1AGBEAAAP041B

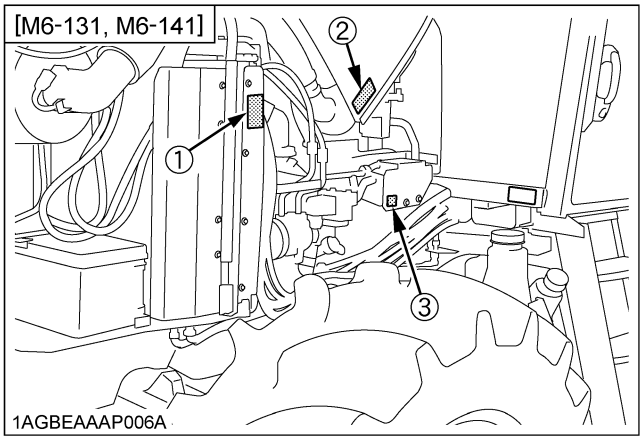

1AGBEAAAP006A

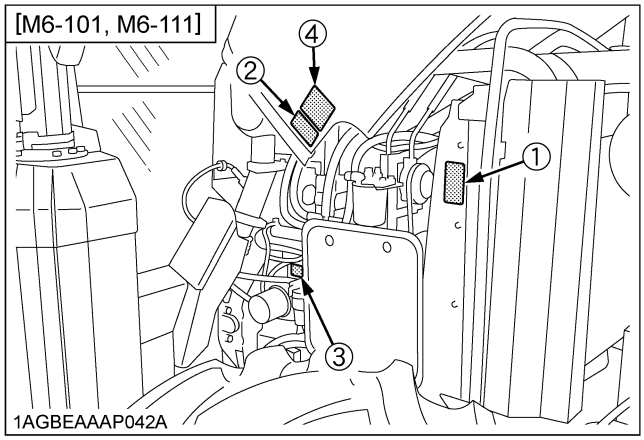

1AGBEAAAP042A

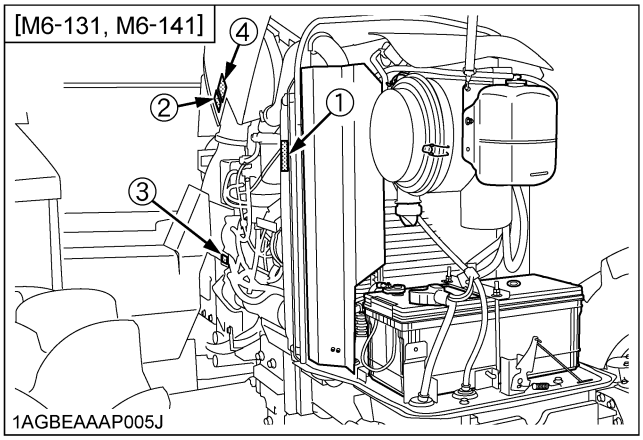

1AGBEAAAP005J

1AGBEAAAP053A

https://truckmanualshub.com/

(1) Part No. 3Y205-9835-1

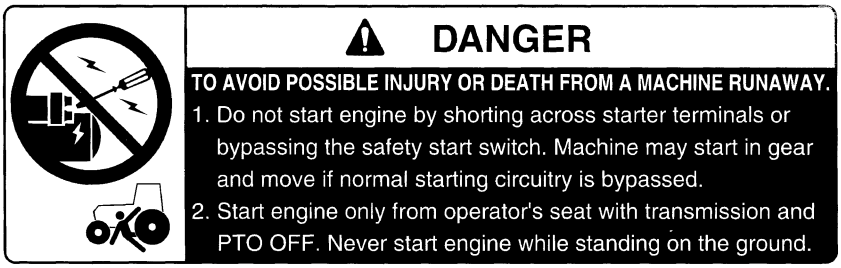

1AGAIJNAP153A

(2) Part No. TC420-4956-1

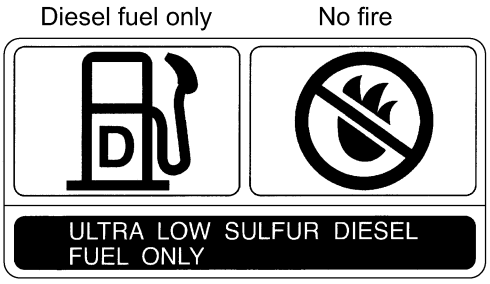

1AGAIDHAP154E

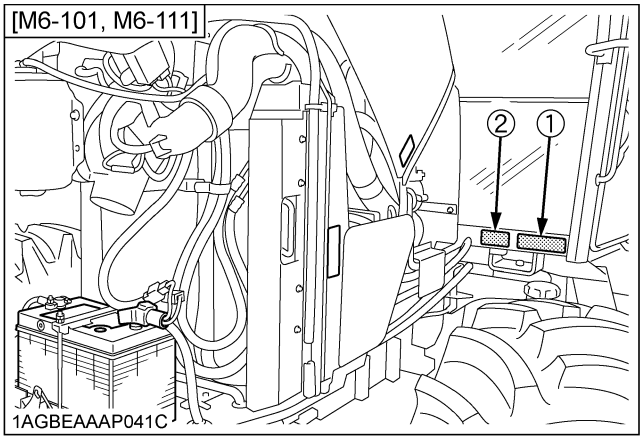

1AGBEAAAP041C

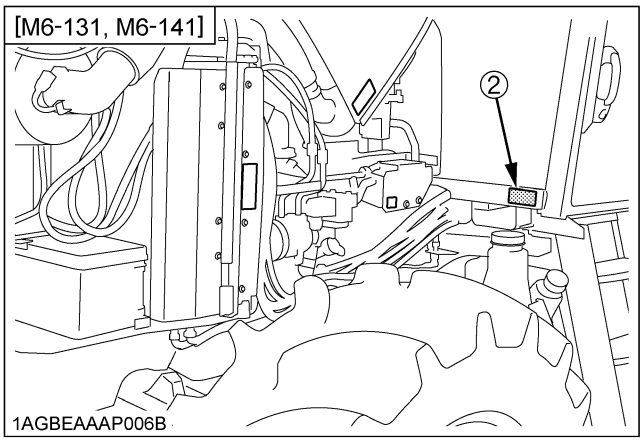

1AGBEAAAP006B

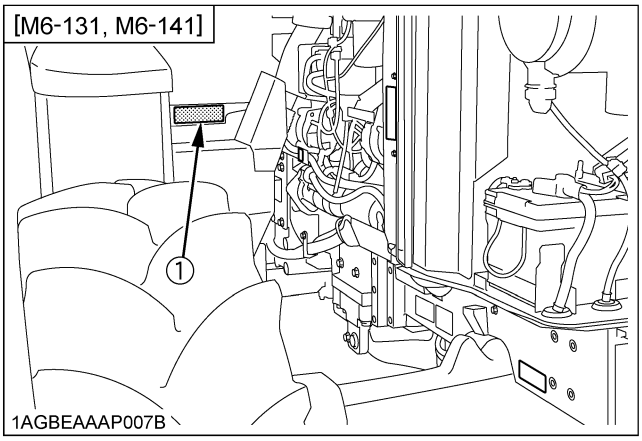

1AGBEAAAP007B

1AGBEAAAP054A

https://truckmanualshub.com/

(1) Part No. 3S205-9778-2
[If optional instructional seat is installed]

⚠ WARNING

TO AVOID PERSONAL INJURY OR DEATH WHEN USING THE INSTRUCTIONAL SEAT:

- Always wear your seat belt and stabilize your body by holding the handrail on the CAB frame.
- The instructional seat is not intended to carry children nor any other person for any other purposes.
- The left hand door must be closed at all time whenever the instructional seat is occupied and the tractor is in motion.
- Do not permit others to ride, except on the designated instructional seat.
- Use caution to avoid the risks of obstructing operator's view, falling from the machine and interfering with controls.
- Do not start and stop the tractor suddenly, nor take sharp turn.
- Do not use the instructional seat if the seat belt or the door lock fails to function.
- Do not use the instructional seat for transport.
- When opening and closing the door from the instructional-seat-sitting position, move the door slowly. This is to prevent his or her hand (s) from getting caught by the door or his or her body to hit against the door.

1AGBEAAAP089A

(2) Part No. 3Y205-9832-2

⚠ WARNING

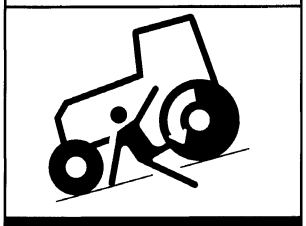

BEFORE DISMOUNTING TRACTOR:

1. ALWAYS SET PARKING BRAKE.
Leaving transmission in gear with the engine stopped will not prevent tractor from rolling.

2. PARK ON LEVEL GROUND WHENEVER POSSIBLE.
If parking on a slope, position tractor across the slope.

3. LOWER ALL IMPLEMENTS TO THE GROUND.
Failure to comply to this warning may allow the wheels to slip, and could cause injury or death .

4. STOP THE ENGINE.

1AGAIJNAP151A

(3) Part No. 3Y205-9831-1

⚠ WARNING

TO AVOID FREE WHEELING WHEN SHIFTING THE SHUTTLE LEVER WHILE ON A SLOPE:
Stop completely by using the brake and by depressing the clutch pedal.
Start off after selecting shuttle direction by releasing the clutch pedal.

⚠ WARNING

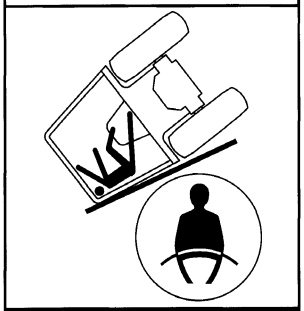

TO AVOID INJURY OR DEATH FROM ROLL-OVER:
Always use seat belt when driving.

1AGAIJNAP150A

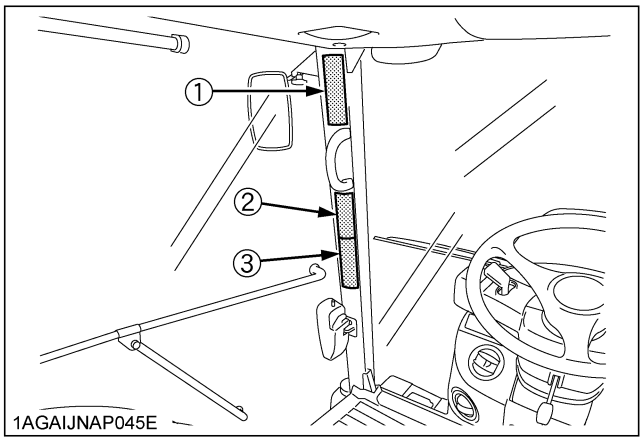

1AGBEAAAP055A

https://truckmanualshub.com/

(1) Part No. 3S205-9836-1

⚠WARNING

TO AVOID PERSONAL INJURY OR DEATH:

1. Read and understand the operator's manual before operation.
2. Before starting the engine, make sure that everyone is at a safe distance from tractor and the PTO is off.
3. Do not allow passengers on the tractor at any time.
4. Before allowing other people to use the tractor, have them read the operator's manual.
5. Check the tightness of nuts and bolts regularly.
6. Keep all shields in place and stay away from all moving parts.
7. Lock the two brake pedals together before driving on the road.
8. Slow down for turns, or rough roads, or when applying individual brakes.
9. On public roads use SMV emblem and hazard lights, if required by local traffic and safety regulations.
10. Pull only from the drawbar.
11. Before dismounting, lower the implement to the ground, set the parking brake, stop the engine and remove the key.
12. Securely support tractor and implements before working underneath.

1AGBEAAAP061A

(2) Part No. 3S565-9855-2 [Front suspension type]

⚠WARNING

TO AVOID PERSONAL INJURY OR DEATH.

Before operating the switches for the front suspension, make sure the area near the machine is clear of all persons and objects.

1AGBEAAAP064A

(3) Part No. 3Y205-9833-1

⚠ WARNING

TO AVOID MACHINE RUNAWAY DUE TO 4WD BRAKING SYSTEM:

Do not run engine with only rear wheels off ground.

⚠ WARNING

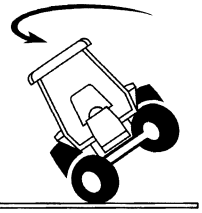

TO AVOID PERSONAL INJURY:

Use "Bi-Speed Turn" only in low gears and slow speed. Do not use "Bi-Speed Turn" in high gears or road speed.

1AGAIJNAP152A

(4) Part No. 3S205-4966-1

⚠ WARNING

USE [UP-DOWN] ONLY ON FARM FIELDS. FOR ALL OTHER APPLICATIONS, USE HYDRAULIC LEVER TO MOVE ATTACHMENT.

1AGBEAAAP060A

(5) Part No. 3S565-9859-1 [Front suspension type]

⚠WARNING

TO AVOID PERSONAL INJURY OR DEAHT:

Servicing of front suspension hydraulic system should be performed only by authorized Kubota dealer.

1AGBEAAAP065A

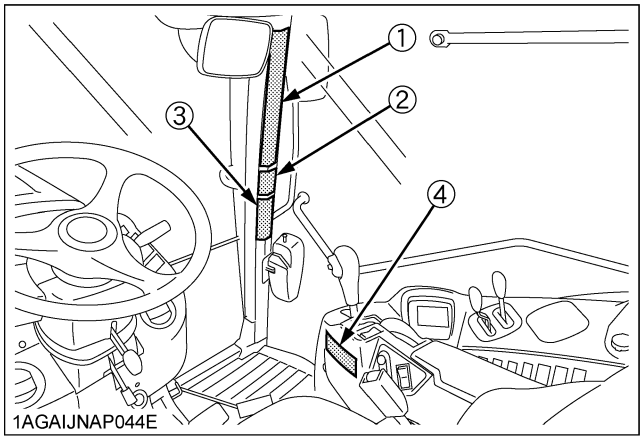

1AGAIJNAP044E

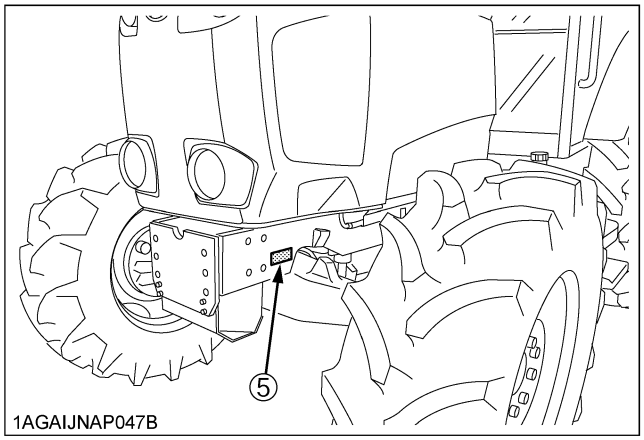

1AGAIJNAP047B

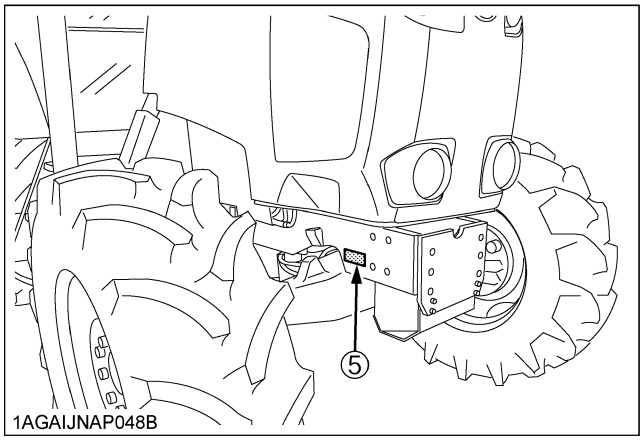

1AGAIJNAP048B

1AGBEAAAP058A

https://truckmanualshub.com/

(1) Part No. 3Y205-9892-1

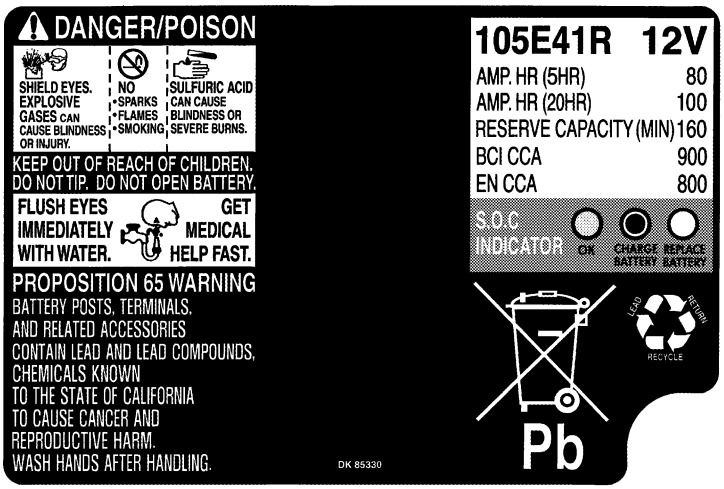

1AGAIJHAP083A

(2) Part No. 3P903-9892-3

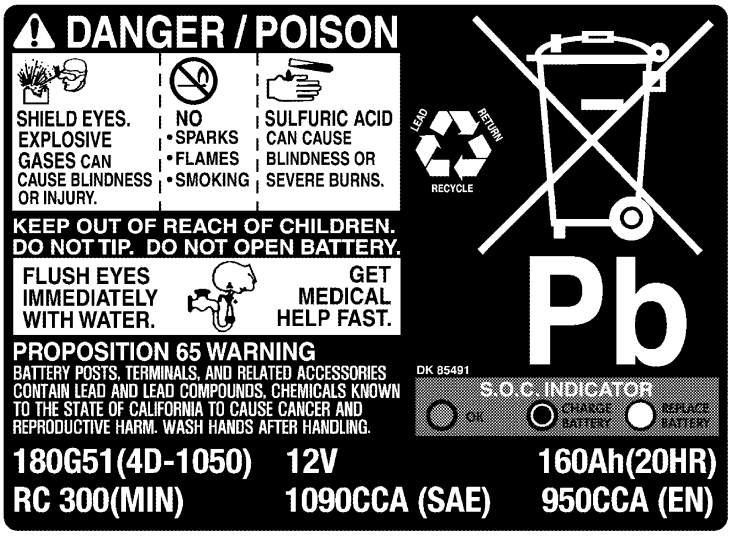

1AGAIJNAP148A

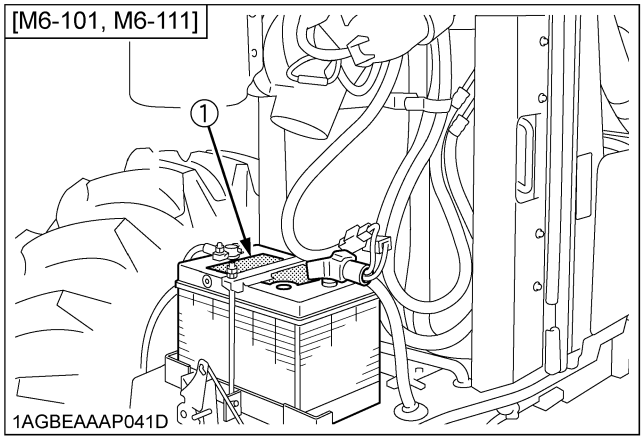

1AGBEAAAP041D

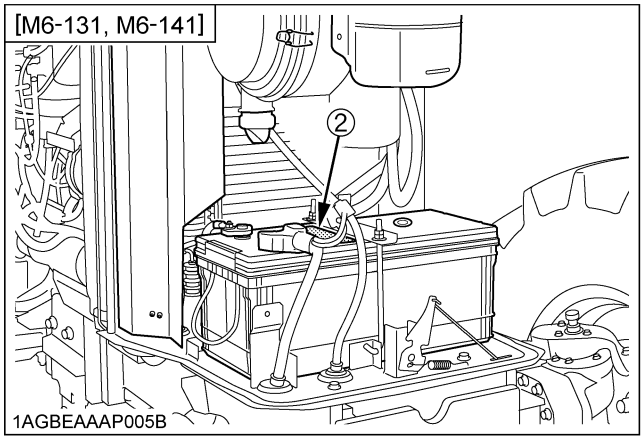

1AGBEAAAP005B

1AGBEAAAP056A

https://truckmanualshub.com/

(1) Part No. 3F240-9819-1
Do not stand by IMPLEMENT or between implement and tractor while operating remote hitch switch.

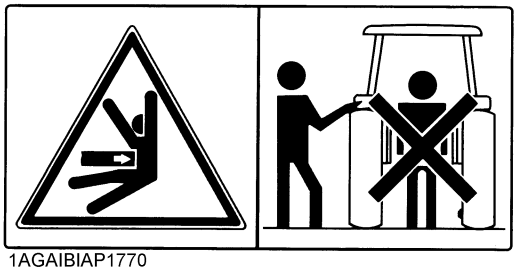

1AGAIBIAP1770

(3) Part No. 6C200-4959-1

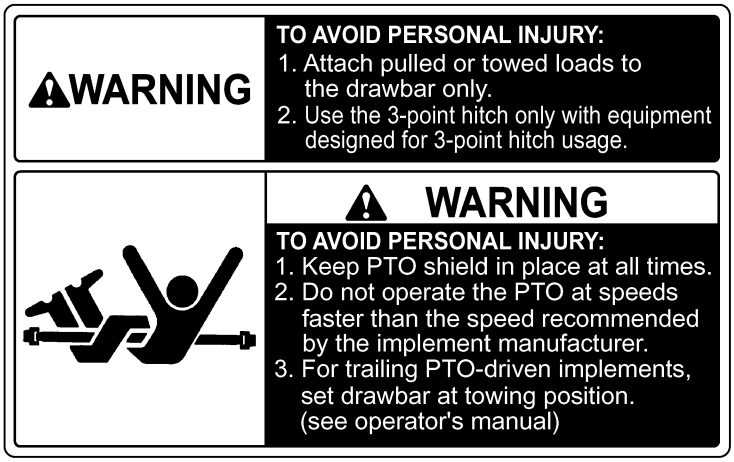

1AGAIHFAP067A

(2) Part No. 3S205-9856-1

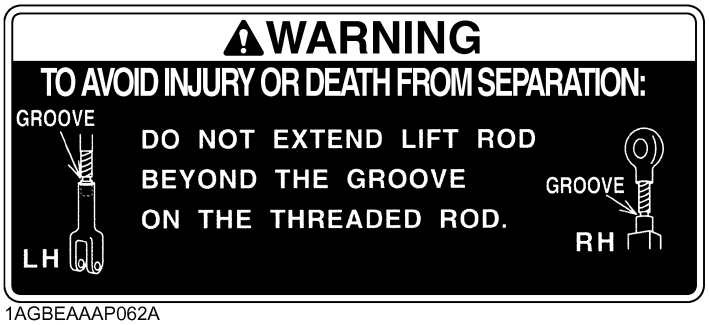

1AGBEAAAP062A

(4) Part No. 1J574-8721-1

To avoid electric shock; Set the key switch to the "OFF" position before checking or repairing the computer, wiring or/and connectors.

1AGAIJNAP165A

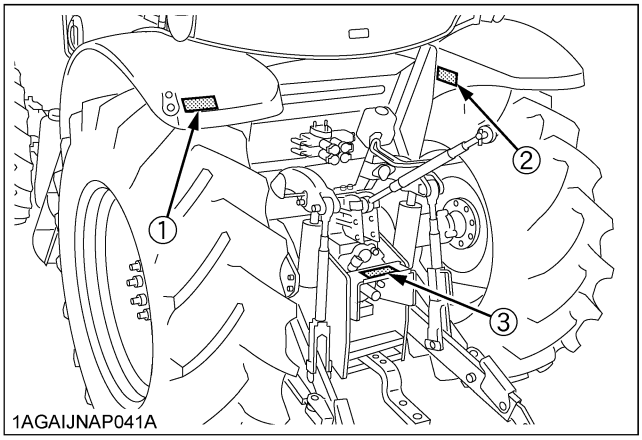

1AGAIJNAP041A

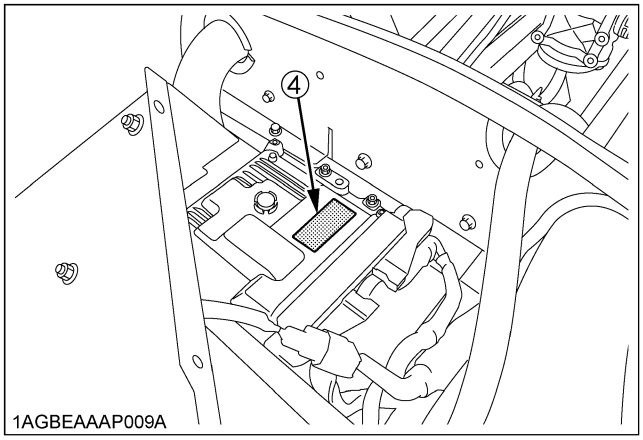

1AGBEAAAP009A

1AGBEAAAP057A

8. CARE OF DANGER, WARNING AND CAUTION LABELS

1. Keep danger, warning and caution labels clean and free from obstructing material.
2. Clean danger, warning and caution labels with soap and water, dry with a soft cloth.
3. Replace damaged or missing danger, warning and caution labels with new labels from your local KUBOTA Dealer.
4. If a component with danger, warning and caution label(s) affixed is replaced with new part, make sure new label(s) is (are) attached in the same location(s) as the replaced component.
5. Mount new danger, warning and caution labels by applying on a clean dry surface and pressing any bubbles to outside edge.

https://truckmanualshub.com/

https://truckmanualshub.com/

SERVICING OF TRACTOR

Your dealer is interested in your new tractor and has the desire to help you get the most value from it. After reading this manual thoroughly, you will find that you can do some of the regular maintenance yourself.
However, when in need of parts or major service, be sure to see your KUBOTA Dealer.
For service, contact the KUBOTA Dealership from which you purchased your tractor or your local KUBOTA Dealer.
When in need of parts, be prepared to give your dealer the tractor, CAB/ROPS and engine serial numbers.
Locate the serial numbers now and record them in the space provided.

	Type	Serial No.
Tractor		
CAB / ROPS		
Engine		
Date of Purchase		
Name of Dealer		
(To be filled in by purchaser)		

◆ **Warranty**
This tractor is warranted under the KUBOTA Limited Express Warranty, a copy of which may be obtained from your selling dealer. No warranty shall, however, apply if the tractor has not been handled according to the instruction given in the Operator's Manual even it is within the warranty period.

◆ **Scrapping the tractor and its procedure**
To put the tractor out of service, correctly follow the local rules and regulations of the country or territory where you scrap it. If you have questions, consult your local KUBOTA Dealer.

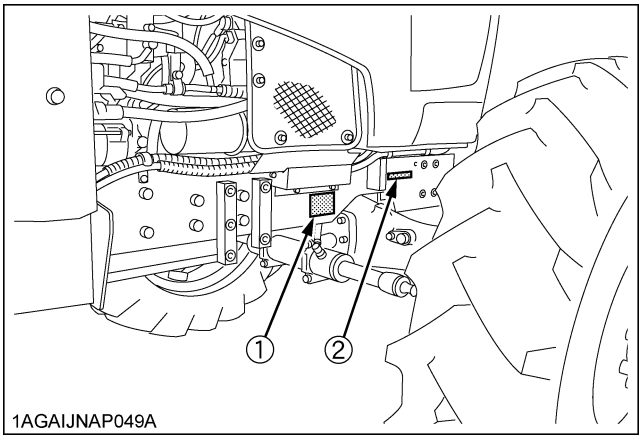

(1) Tractor identification plate
(2) Tractor serial number

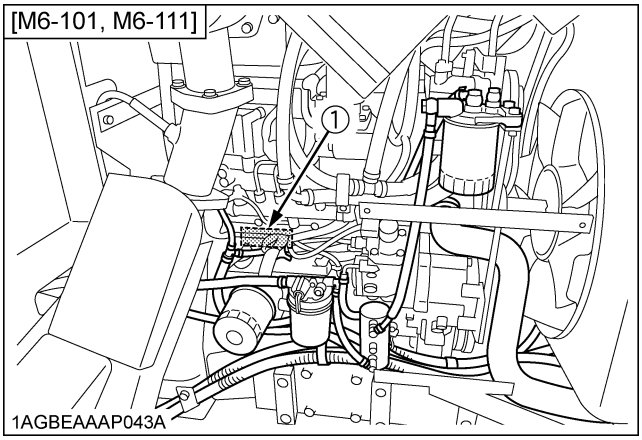

(1) Engine serial number

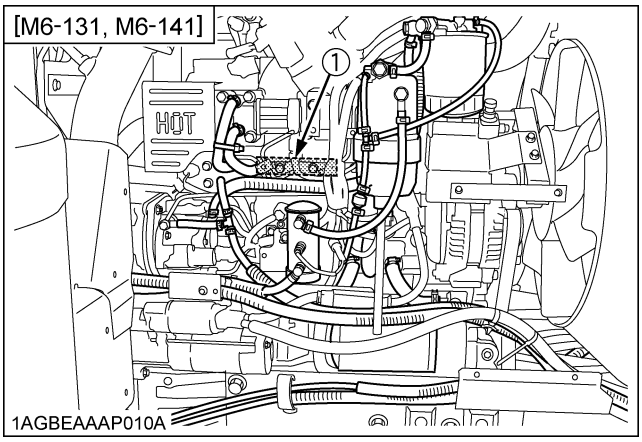

(1) Engine serial number

https://truckmanualshub.com/

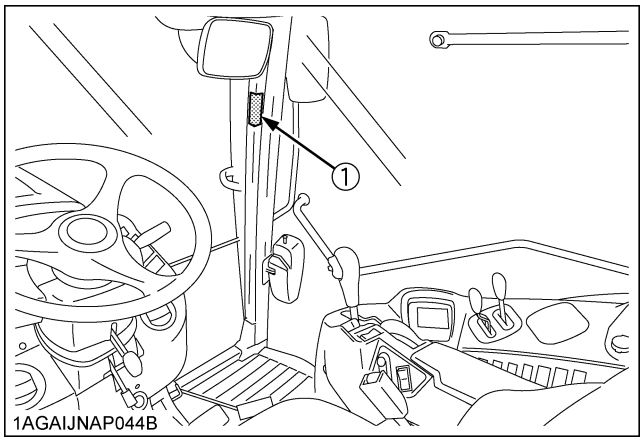

(1) CAB identification plate (CAB Serial No.)

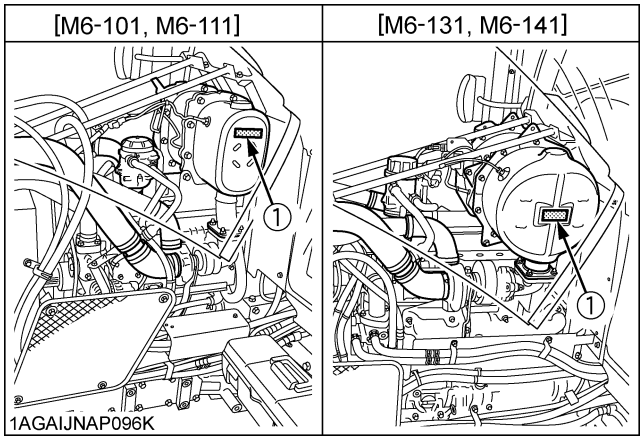

(1) Diesel Particulate Filter (DPF) serial number

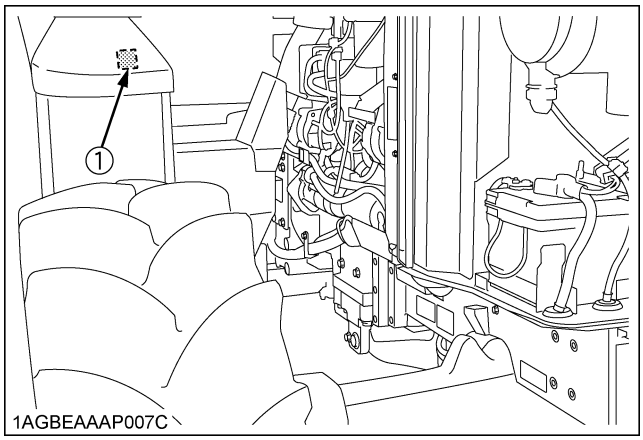

(1) Selective Catalytic Reduction (SCR) muffler serial number

https://truckmanualshub.com/

SPECIFICATIONS

SPECIFICATION TABLE

Model				M6-101	M6-111	M6-131	M6-141
				4WD			
Engine	Model			V3800-TIEF4		V6108-TIEF4	
	Type			Direct Injection, Water-cooled 4 Cycle Diesel, Common Rail System, Turbocharger, Intercooler			
	Number of cylinders			4			
	Total displacement		cm^3 (cu.in.)	3769 (230)		6124 (374)	
	Bore and stroke		mm (in.)	100 x 120 (3.94 x 4.72)		118 x 140 (4.65 x 5.51)	
	Rated revolution		rpm	2600		2200	
	Low idling revolution		rpm	800 to 850			
	Net power *1		kW (HP)	74.6 (100)	81.7 (109.5)	93.2 (125)	100.7 (135)
	PTO power *1 (factory observed)		kW (HP) / rpm	61.1 (82) / 2600	68.6 (92) / 2600	77.6 (104) / 2200	85.0 (114) / 2200
	Battery capacity			12V, 100Ah at 20hours, 900CCA		12V, 160Ah at 20hours, 1090CCA	
	Fuel tank capacity		L (U.S.gals.)	190 (50.2)			
	Engine oil capacity		L (U.S.qts.)	10.5 (11.1)		14.6 (15.4)	
	Coolant capacity		L (U.S.qts.)	10.1 (10.7)		14.6 (15.4)	
	DEF/AdBlue® capacity		L (U.S.gals.)	16 (4.2)			
Dimensions	Overall length		mm (in.)	4200 (165.4)		4360 (171.7) <4350 (171.3)>	
	Overall width (minimum tread)		mm (in.)	2100 (82.7)		2180 (85.8)	
	Overall height		mm (in.)	2790 (109.8)	2840 (111.8)	2875 (113.2)	
	Wheel base		mm (in.)	2435 (95.9)		2690 (105.9) <2680 (105.5)>	
	Tread	Front	mm (in.)	1580 (62.2), 1680 (66.1)		1775 (69.9), 1875 (73.8)	
		Rear	mm (in.)	1520 (59.8) to 2060 (81.1)	1530 (60.2) to 2040 (80.3)	1590 (62.6) to 2090 (82.3)	
	Crop clearance		mm (in.)	370 (14.5)	425 (16.7)	450 (17.7)	
Weight			kg (lbs.)	4355 (9601)	4440 (9789)	4965 (10946) <5165 (11387)>	
Traveling system	Standard tire size	Front tires		12.4R24	13.6R24	14.9R24	
		Rear tires		18.4R30	18.4R34	18.4R38	
	Clutch			Multiple wet disc, Electronic Hydraulically operated			
	Steering			Hydrostatic Power Steering			
	Braking system			Hydraulically operated wet disk			
	Differential			Bevel gears with differential lock (Front, Rear)			

https://truckmanualshub.com/

Model				M6-101	M6-111	M6-131	M6-141
				4WD			
Hydraulic unit	Hydraulic control system			Electronic draft control			
	Pump capacity		L/min (gpm)	70.9 (18.7)		77.2 (20.4)	
	3-point hitch			Category 2			
	Max. lifting force	At lifting points	kg (lbs.)	3900 (8598) At lower link end with links horizontal			
		24 in. behind lifting point *2	kg (lbs.)	3100 (6834)			
	Remote hydraulic control			2 standard (3rd & 4th valve optional)			
	System pressure		MPa (kgf/cm^2)	19.6 (200)			
	Traction system			Swinging drawbar, adjustable in direction			
PTO	Live PTO (Independent)	Direction of turning		Clockwise, viewed from tractor rear			
		PTO/ Engine speed	rpm	6 spline: 540 / 2405 21 spline: 1000 / 2389		6 spline: 540 / 1994 21 spline: 1000 / 2050	

The company reserves the right to change the specifications without notice.

NOTE: *1 Manufacturer's estimate
*2 Top link mounting: upper hole
< >: Front suspension type

https://truckmanualshub.com/

TRAVELING SPEEDS

(At rated engine rpm)

Model		M6-101		M6-111		M6-131, M6-141	
Tire size (Rear)		18.4R30		18.4R34		18.4R38	
Range		Speed (km/h)	Speed (mph)	Speed (km/h)	Speed (mph)	Speed (km/h)	Speed (mph)
C	1	0.19	0.11	0.20	0.12	0.20	0.12
	2	0.23	0.14	0.24	0.15	0.24	0.15
	3	0.27	0.17	0.29	0.18	0.29	0.18
	4	0.33	0.20	0.35	0.22	0.36	0.22
	5	0.39	0.24	0.41	0.26	0.41	0.26
	6	0.47	0.29	0.50	0.31	0.50	0.31
	7	0.56	0.35	0.59	0.37	0.61	0.38
	8	0.68	0.42	0.72	0.45	0.74	0.46
L	1	0.78	0.49	0.83	0.52	0.84	0.52
	2	0.96	0.59	1.02	0.63	1.01	0.63
	3	1.13	0.70	1.21	0.75	1.23	0.77
	4	1.37	0.85	1.46	0.91	1.50	0.93
	5	1.62	1.01	1.73	1.08	1.74	1.08
	6	1.99	1.24	2.12	1.32	2.11	1.31
	7	2.35	1.46	2.51	1.56	2.56	1.59
	8	2.85	1.77	3.04	1.89	3.12	1.94
M	1	3.3	2.1	3.5	2.2	3.5	2.2
	2	4.1	2.5	4.3	2.7	4.3	2.7
	3	4.8	3.0	5.1	3.2	5.2	3.2
	4	5.8	3.6	6.2	3.9	6.4	4.0
	5	6.9	4.3	7.4	4.6	7.4	4.6
	6	8.4	5.2	9.0	5.6	8.9	5.6
	7	9.9	6.2	10.6	6.6	10.9	6.8
	8	12.1	7.5	12.9	8.0	13.2	8.2
H	1	9.1	5.7	9.8	6.1	9.8	6.1
	2	11.2	7.0	12.0	7.4	11.9	7.4
	3	13.2	8.2	14.1	8.8	14.4	9.0
	4	16.0	10.0	17.1	10.6	17.6	10.9
	5	19.0	11.8	20.3	12.6	20.4	12.6
	6	23.3	14.5	24.9	15.4	24.7	15.4
	7	27.5	17.1	29.3	18.2	30.0	18.6
	8 *	35.3	21.9	37.7	23.4	39.1	24.3

The company reserves the right to change the specifications without notice.

* At maximum engine rpm.

https://truckmanualshub.com/

IMPLEMENT LIMITATIONS

The KUBOTA Tractor has been thoroughly tested for proper performance with implements sold or approved by KUBOTA. Use with implements which are not sold or approved by KUBOTA and which exceed the maximum specifications listed below, or which are otherwise unfit for use with the KUBOTA Tractor may result in malfunctions or failures of the tractor, damage to other property and injury to the operator or others. [Any malfunctions or failures of the tractor resulting from use with improper implements are not covered by the warranty.]

	Tread (max. width)			Operating condition	Lower link end max. lifting capacity W 0
	Front		Rear		
	Without spacer	With spacer			
M6-101 M6-111	1680 mm (66.1 in.)	---	2060 mm (81.1 in.)	IMPORTANT ● Tractor with front spacer option is not approved for use with front loader.	3900 kg (8598 lbs.)
M6-131 M6-141	1875 mm (73.8 in.)	2050 mm (80.7 in.)	2090 mm (82.3 in.)		

Actual figures		
Implement weight W 1 and / or size	Max. Drawbar Load W 2	Trailer loading weight W 3 Max. capacity
As in the following list (Shown on the next page)	1500 kg (3300 lbs.)	7000 kg (15400 lbs.)
		8000 kg (17600 lbs.)

Lower link end max,
hydraulic lifting capacity..... W 0
Implement weight.....The implement's weight which can be put on the lower link: W 1
Max. drawbar load.....W 2
Trailer loading weight.....The max. loading weight for trailer (without trailer's weight): W 3

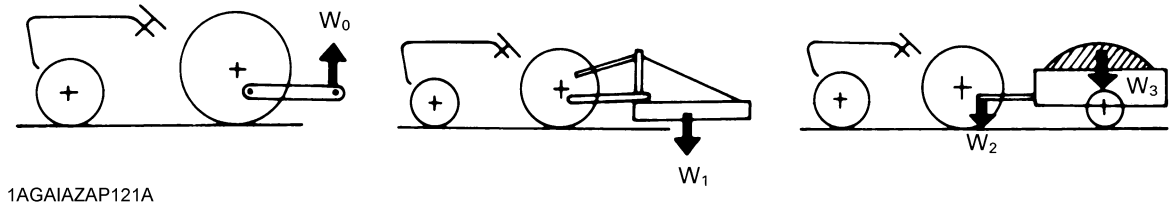

NOTE :
- Implement size may vary depending on soil operating conditions.
- Strictly follow the instructions outlined in the operator's manual of the mounted or trailed machinery or trailer, and do not operate the combination tractor - machine or tractor - trailer unless all instructions have been followed
- Forestry Application
  Following hazards exist;
  (a) toppling trees, primarily in case a rear-mounted tree grab-crane is mounted at the rear of the tractor;
  (b) penetrating objects in the operator's enclosure, primarily in case a winch is mounted at the rear of the tractor.
  Optional equipments such as OPS (Operator Protective Structure), FOPS (Falling Object Protective Structure), etc. to deal with these hazards and other related hazards are not available for this tractor. Without such optional equipment use is limited to tractor specific applications like transport and stationary work.

https://truckmanualshub.com/

No.	Implement		Remarks			M6-101, M6-111	M6-131, M6-141
						4WD	4WD
1	Slurry Tank		Max. Tank Capacity		L (gals.)	5000 (1320)	6000 (1585)
			Max. Load Capacity		kg (lbs.)	6000 (13200)	7000 (15400)
2	Trailer		Max. Load Capacity		kg (lbs.)	7000 (15400)	8000 (17600)
			Max. Drawbar Load		kg (lbs.)	1500 (3300)	1500 (3300)
3	Mower	Rotary-Cutter	Max. Cutting Width		mm (in.)	3200 (126)	3200 (126)
			Max. Weight		kg (lbs.)	800 (1764)	906 (2000)
		Flail Mower (Heavy)	Max. Cutting Width		mm (in.)	4267 (168)	4267 (168)
			Max. Weight		kg (lbs.)	1360 (3000)	1360 (3000)
		Sickle Bar	Max. Cutting Width		mm (in.)	3050 (120)	3050 (120)
4	Sprayer		Max. Tank-Capacity	Mid	L (gals.)	1000 (260)	1200 (320)
				Rear 3P	L (gals.)	1200 (320)	1400 (370)
				Drawbar	L (gals.)	5500 (1450)	6000 (1585)
5	Rotary Tiller		Max. Tilling Width		mm (in.)	2700 (108)	2700 (108)
			Max. Weight		kg (lbs.)	1200 (2645)	1200 (2645)
6	Bottom Plow		Max. Size			14 in. x 5 18 in. x 4 20 in. x 3 22 in. x 2 24 in. x 1	14 in. x 6 18 in. x 5 20 in. x 4 22 in. x 2 24 in. x 1
			Max. Weight		kg (lbs.) 3P Type	1100 (2425)	1100 (2425)
7	Disk harrow	3P Type	Max. Size			24 in. x 30	24 in. x 30
			Max. Harrowing Width		mm (in.)	3600 (144)	3600 (144)
			Max. Weight		kg (lbs.)	1000 (2200)	1000 (2200)
		Drawbar Type	Max. Harrowing Width		mm (in.)	4570 (180)	4570 (180)
8	Disc Plow		Max. Size			30 in. x 4	30 in. x 4
			Max. Weight		kg (lbs.)	1000 (2200)	1000 (2200)
9	Sub Soiler		Numbers of Cultivating Tines			3	3
			Cultivating Depth		mm (in.)	600 (24)	600 (24)
10	Cultivator		Max. Width		mm (in.)	5490 (216)	5490 (216)
			Number of Rows			6	6
			Max. Weight		kg (lbs.)	1000 (2200)	1000 (2200)
11	Front Blade *1,*2		Max. Cutting Width		mm (in.)	2600 (102)	2600 (102)
			Max. Oil Pressure		MPa (psi.)	18.1 (2630)	18.1 (2630)
12	Rear Blade		Max. Cutting Width		mm (in.)	2600 (102)	2743 (108)
			Max. Oil Pressure		MPa (psi.)	18.1 (2630)	18.1 (2630)
13	Front Loader *1,*2		Max. Lifting Capacity (Bucket pivot pin, max. height) *3		kg (lbs.)	1950 (4299)	2210 (4872)
			Max. Oil Pressure		MPa (psi.)	20.5 (2975)	20.5 (2975)
14	Box Blade		Max. Cutting Width		mm (in.)	2430 (96)	2430 (96)
			Max. Weight		kg (lbs.)	800 (1760)	800 (1760)
15	Back Hoe *2		Max. Digging Depth		mm (in.)	3050 (120)	3050 (120)
			Max. Weight		kg (lbs.)	1200 (2650)	1200 (2650)
16	Snow Blade		Max. Width		mm (in.)	2600 (102)	2600 (102)
			Max. Weight		kg (lbs.)	800 (1760)	800 (1760)

NOTE :

- Implement size may vary depending on soil operating conditions.

*1 Must remove front weight with this implement.

*2 Need subframe.

*3 The value contains the weight of KUBOTA standard bucket.

https://truckmanualshub.com/

INSTRUMENT PANEL AND CONTROLS

■ Instrument Panel, Switches and Hand Controls

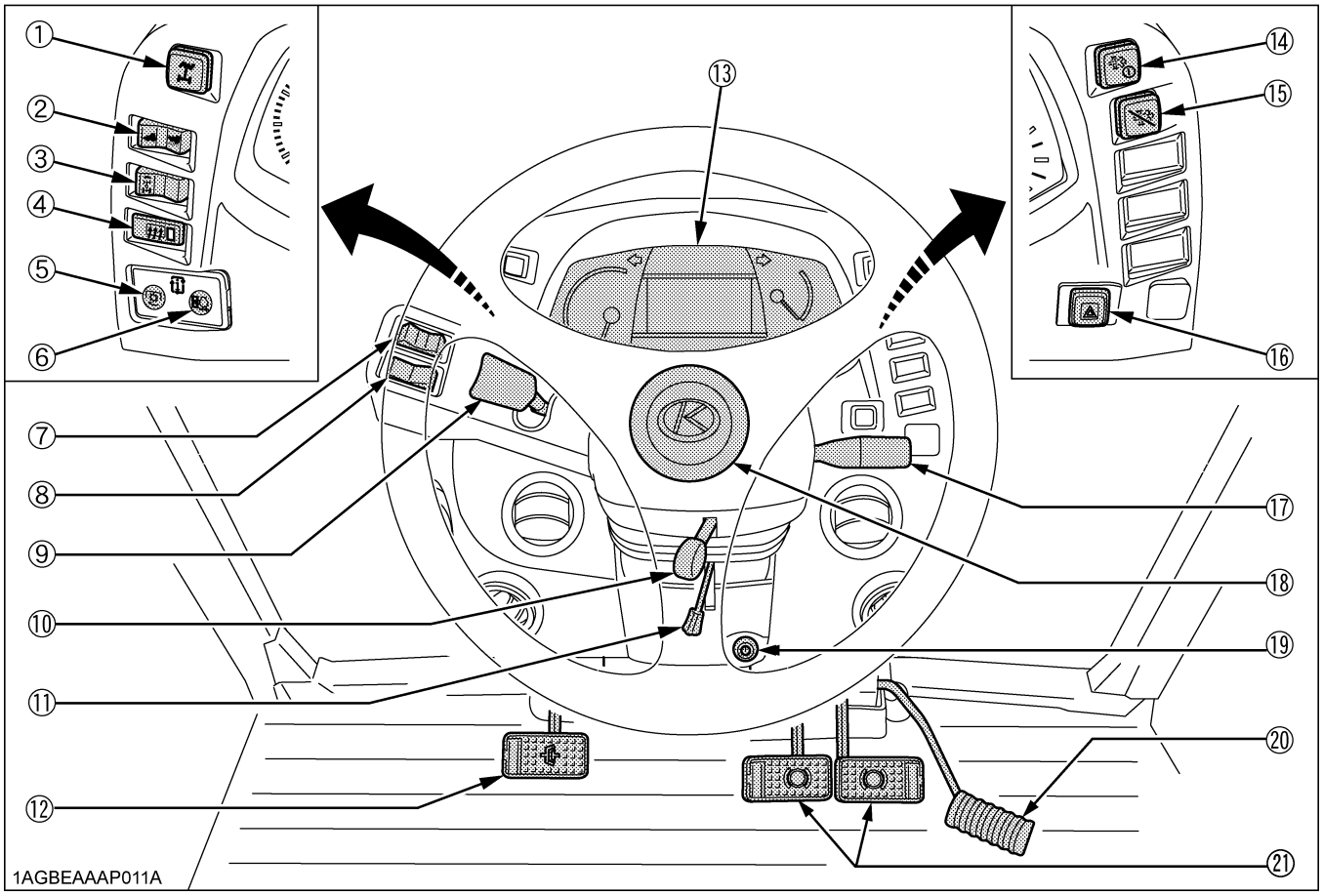

ILLUSTRATED CONTENTS

(1) Front wheel differential lock switch 75
(2) 4WD/Auto 4WD switch 45
(3) Bi-speed turn switch 46
(4) Defogger switch (if equipped) 109
(5) PTO indicator switch 54
(6) Display switch
(Hour, Trip, Engine RPM dual memory A/B) 54, 59
(7) Front wiper/washer switch 104
(8) Rear wiper/washer switch 105
(9) Shuttle lever 44
(10) Steering wheel telescope lever 37

ILLUSTRATED CONTENTS

(11) Steering wheel tilt lever 37
(12) Clutch pedal 41
(13) Instrument panel 50
(14) Parked regeneration switch 19
(15) DPF INHIBIT switch 17
(16) Hazard light switch 38
(17) Turn signal/Head light switch 38, 38
(18) Horn button 39
(19) Key switch ..... ---
(20) Foot throttle 49
(21) Brake pedal 40

https://truckmanualshub.com/

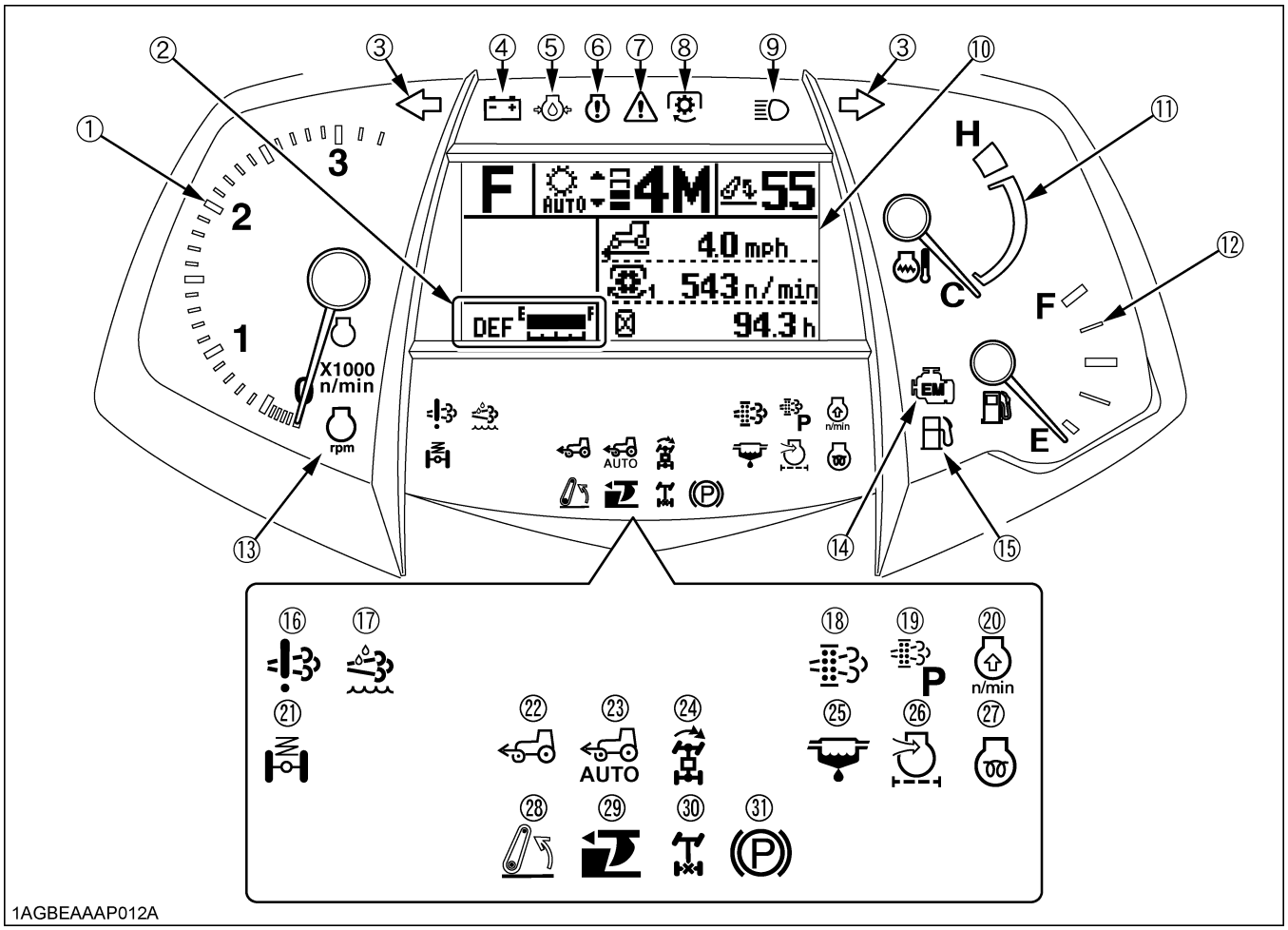

ILLUSTRATED CONTENTS

(1) Tachometer 52
(2) DEF/AdBlue® gauge 51
(3) Turn signal/Hazard indicator 38
(4) Electrical charge warning indicator 50
(5) Engine oil pressure warning indicator 50
(6) Engine warning indicator 50
(7) Master system warning indicator 50
(8) PTO clutch indicator 78
(9) High-beam indicator 38
(10) Liquid crystal display 53
(11) Coolant temperature gauge 52
(12) Fuel gauge 51
(13) Constant RPM management indicator 62
(14) Emission indicator 50
(15) Fuel level indicator 50
(16) DEF/AdBlue® system warning indicator 50

ILLUSTRATED CONTENTS

(17) DEF/AdBlue® warning indicator 50
(18) Regeneration indicator 15
(19) Parked regeneration indicator 19
(20) Engine RPM increase indicator 15
(21) Front suspension indicator
[Front suspension type] 71
(22) 4WD indicator..... 45
(23) Auto 4WD indicator 45
(24) Bi-speed turn indicator 46
(25) Water separator indicator 50
(26) Air cleaner indicator 50
(27) Heater indicator 32
(28) 3-P. Lifting/Lowering indicator 90
(29) Draft indicator 87
(30) Rear wheel differential lock indicator 75
(31) Parking brake warning indicator 27

https://truckmanualshub.com/

■ Foot and Hand Controls

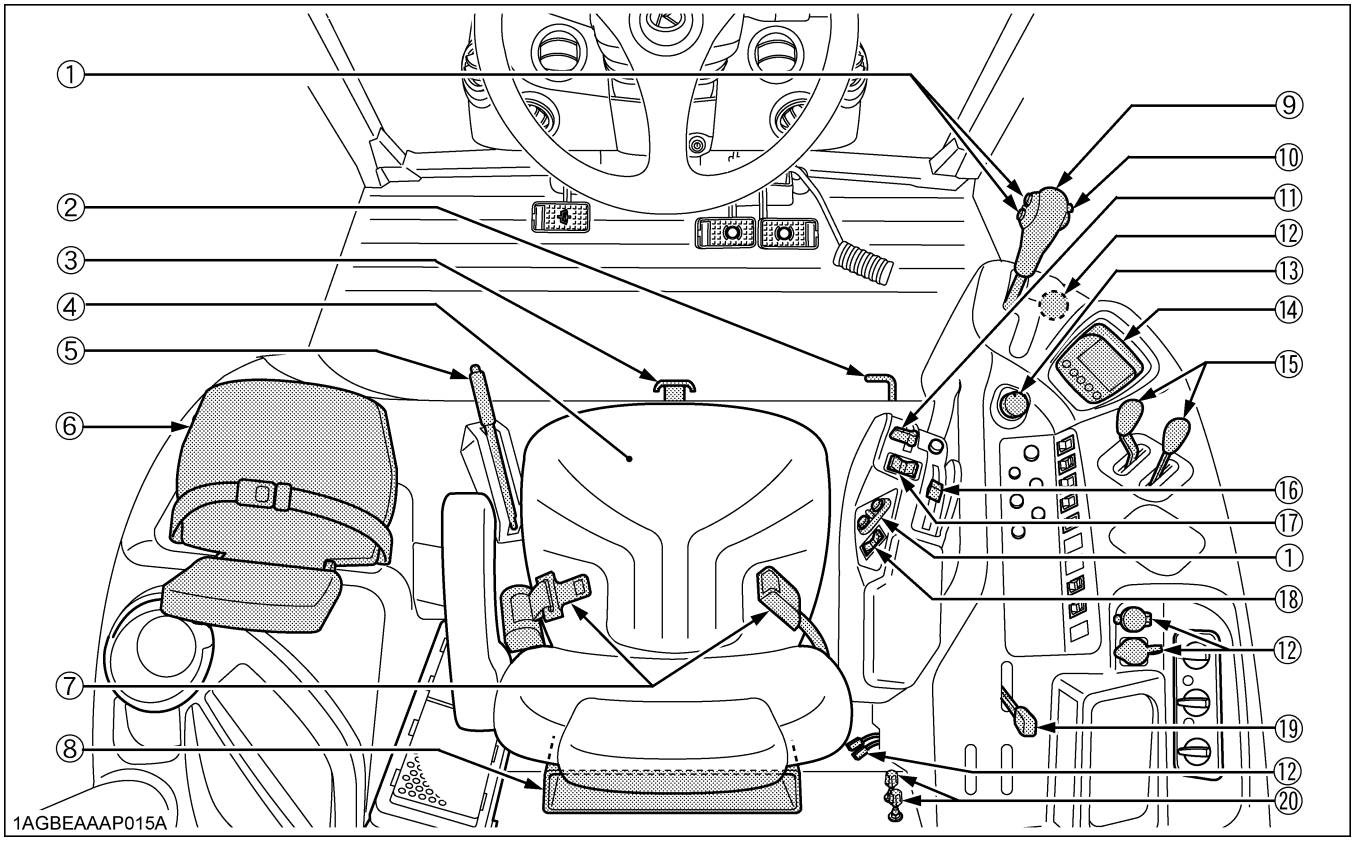

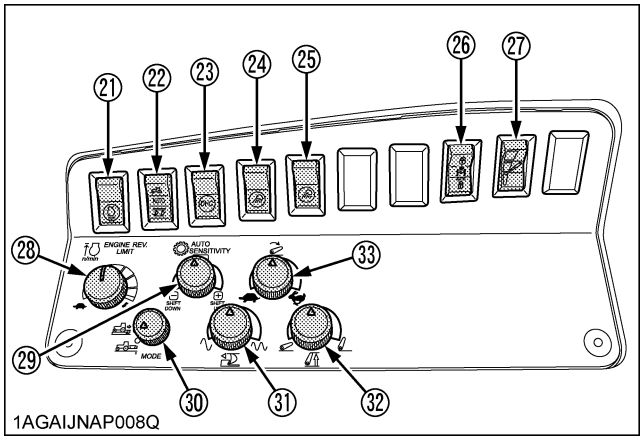

ILLUSTRATED CONTENTS

(1) Up-shift/Down-shift button 42
(2) Rear wheel differential lock pedal 75
(3) 3-point hitch lowering lock lever 90
(4) Seat 34
(5) Parking brake lever 49, 74
(6) Instructional seat (if equipped) 36
(7) Seat belt 36
(8) Operator's manual storage ..... ---
(9) Power shift/Range shift lever 42

ILLUSTRATED CONTENTS

(10) Clutch button 42
(11) Hand throttle lever 49
(12) Electrical outlet 110
(13) PTO clutch control switch 78
(14) Side digital display 55
(15) Remote control valve lever 91
(16) Hydraulic control lever 86
(17) RPM dual memory switch 59
(18) 3-P. Quick raise / lower switch 90
(19) Creep lever (if equipped) 45
(20) Flow control knob 93
(21) Constant RPM management switch 62
(22) Auto-Mode switch 63
(23) DHC switch 44
(24) Front work light switch 39
(25) Rear work light switch 39
(26) Suspension switch [Front suspension type] 71
(27) Ride condition damper switch [Front suspension type] 73
(28) Rev-limiter control dial 49
(29) Auto-Mode sensitivity adjustment dial 68
(30) Mode selector switch 86
(31) Draft ratio adjustment dial 86
(32) Lift arm top limit adjustment dial 86
(33) 3-point hitch lowering speed adjustment dial ... 86

https://truckmanualshub.com/

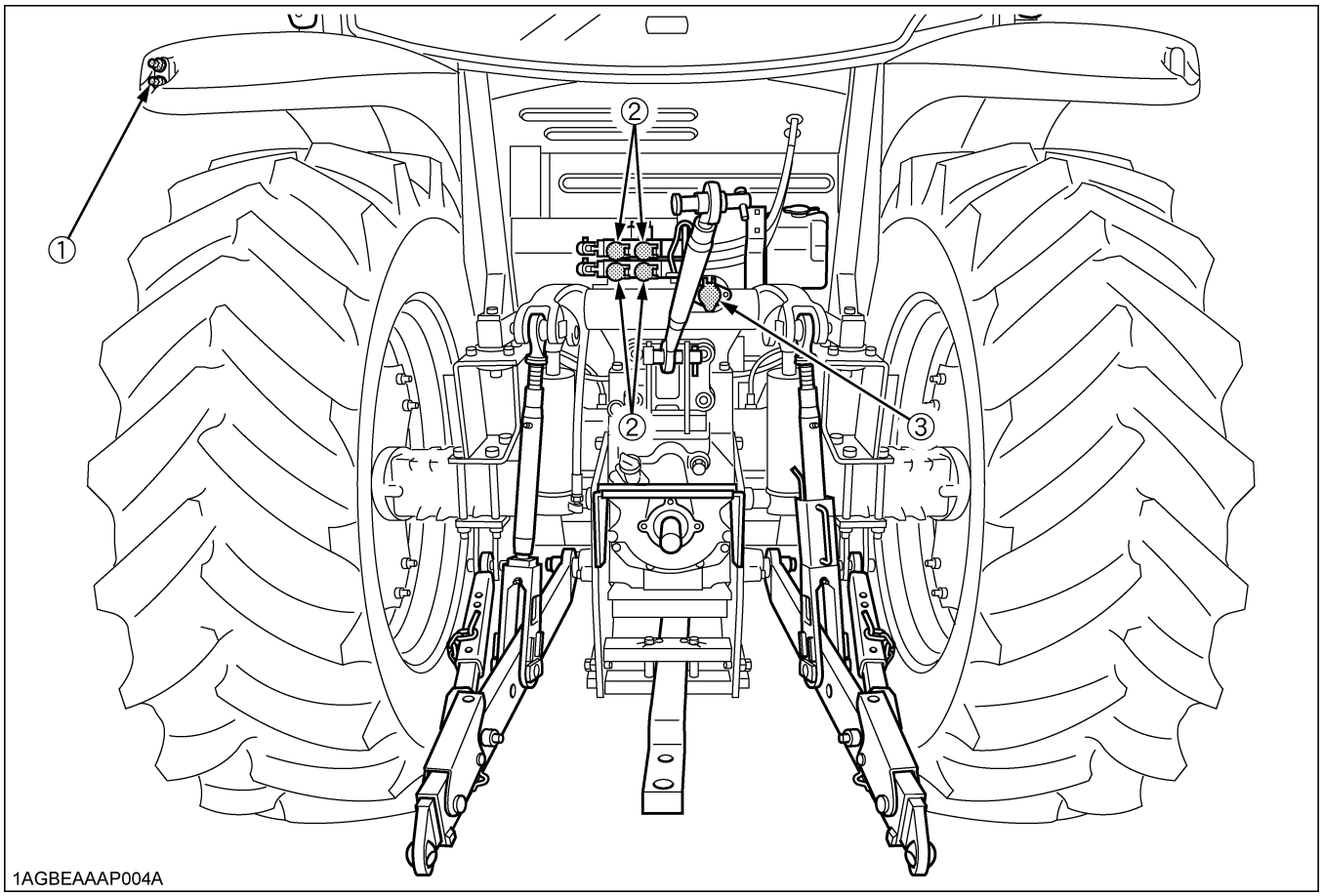

ILLUSTRATED CONTENTS

(1) Remote 3-point hitch Up / Down switch 83

(2) Remote control valve coupler 91

(3) Trailer electrical outlet 77

https://truckmanualshub.com/

PRE-OPERATION CHECK

DAILY CHECK

To prevent trouble from occurring, it is important to know the condition of the tractor well. Check it before starting.

WARNING

To avoid personal injury or death:

- **Be sure to check and service the tractor on a level surface with the engine shut off and the parking brake "ON" and implement lowered to the ground.**

Check item

- Walk around inspection
- Check engine oil level
- Check transmission oil level
- Check coolant level
- Check water separator
- Clean grill, radiator and screen
- Check DPF/SCR muffler
- Check air cleaner evacuator valve
  (When used in a dusty place)
- Check brake pedal
- Check parking brake lever
- Check indicators, gauges and meter
- Check lights
- Check seat belt
- Check movable parts
- Supply DEF/AdBlue®
- Refuel
  (See "DAILY CHECK" in "PERIODIC SERVICE" section.)
- Care of danger, warning and caution labels
  (See "DANGER, WARNING AND CAUTION LABELS" in "SAFE OPERATION" section.)

https://truckmanualshub.com/

OPERATING THE ENGINE

WARNING

To avoid personal injury or death:

- **Read "Safe Operation" in the front of this manual.**
- **Read the danger, warning and caution labels located on the tractor.**
- **To avoid the danger of exhaust fume poisoning, do not operate the engine in a closed building without proper ventilation.**
- **Never start engine while standing on ground. Start engine only from operator's seat.**
- **Make it a rule to set all shift levers to the "NEUTRAL" positions and to place PTO clutch control switch in "OFF" position before starting the engine.**
- **When the engine is started, the machine height may change unexpectedly. Before starting the tractor, make sure the area near the machine is clear of all persons and objects. [Front suspension type].**

IMPORTANT :

- Do not use starting fluid or ether.
- To protect the battery and the starter, make sure that the starter is not continuously turned for more than 10 seconds.

EXHAUST AFTERTREATMENT DEVICES

WARNING

To avoid personal injury or death:

- **During Diesel Particulate Filter (DPF) regenerating operations, exhaust gases and exhaust filter components reach temperatures hot enough to burn people, or ignite or melt common materials.**
- **Keep tractor away from people, animals or structures which may be susceptible to harm or damage from hot exhaust gases.**
- **During regeneration, white exhaust gases may be visible. Do not allow regeneration in a non ventilated garage or confined area.**
- **During regeneration, do not leave the tractor.**

■Dual Exhaust Aftertreatment Devices

Particulate matter (PM) and black smoke contained in exhaust gases are trapped and removed by the DPF (Diesel Particulate Filter) muffler.

The SCR system then decomposes residual nitrogen oxides (NOx) into harmless nitrogen (N2) and water (H2O) for purification.

This dual exhaust gas purifying device provides for clean exhaust gas at low fuel consumption.

https://truckmanualshub.com/

DIESEL PARTICULATE FILTER (DPF) MUFFLER

This tractor is equipped with an engine with a DPF (Diesel Particulate Filter) muffler which serves to reduce hydrocarbons, carbon monoxide and other gases, all of which are contained in diesel engine emissions, to harmless carbon dioxide and water. The DPF also traps PM (particulate matter).
Please handle exhaust aftertreatment devices correctly and in an environmentally responsible manner.

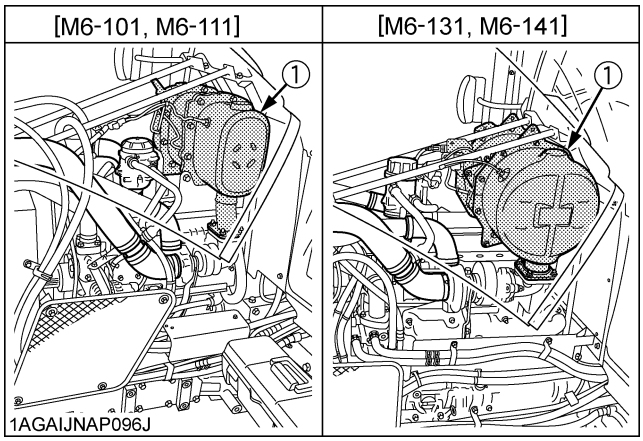

(1) Diesel Particulate Filter (DPF)

■Handling Points

When a specific amount of PM (particulate matter) has accumulated in the DPF muffler, it is necessary to refresh the DPF muffler by burning the PM inside it. This burning off work is called "Regeneration".
To extend operating time to reach this regeneration, and to avoid DPF muffler trouble, make sure to observe the following handling matters.

◆ **Fuel**
Be sure to use Ultra Low Sulfur Fuel (S15).

IMPORTANT :
- Use of diesel fuel other than Ultra Low Sulfur Fuel may adversely affect the engine and DPF performance.
  Use of fuels other than Ultra Low Sulfur Fuel (S15) may not meet regulations for your region.

◆ **Engine oil**
Use DPF-compatible oil (CJ-4) for the engine.

IMPORTANT :
- If any engine oil other than CJ-4 is used, the DPF may become clogged earlier than expected and the fuel economy may drop.

◆ **Prohibition of unnecessary idling operation**
Generally, the lower the engine speed, the lower the exhaust gas temperature is, so the PM contained in exhaust gas will not be burnt, and begins to accumulate. Therefore, don't idle unnecessarily.

◆ **Regeneration**
When there is "Regeneration" instruction sign by lamp or buzzer, immediately perform the required procedure for regeneration.

IMPORTANT :
- Interrupting the regeneration cycle or continued operation by ignoring the warning signs may cause DPF and engine damage.

■DPF Regeneration Process

DPF regeneration process can be performed by choosing from "Auto Regeneration" or "Regeneration inhibit" mode according to your job conditions. For jobs not affected by hot gases emitted during regeneration, the "Auto Regeneration" is advisable.

◆ **Auto Regeneration Mode;**
When starting the engine (switch operation is unnecessary), the "Auto Regeneration" mode is automatically activated.
With the auto regeneration mode on, when a specific amount of PM has accumulated, and the regeneration conditions are satisfied (See the "Tips on Diesel Particulate Filter [DPF] Regeneration"), the DPF will be automatically regenerated whether the tractor is in motion or parked.
By this way, work efficiency is improved. For details of auto regeneration, refer to "Operating Procedure for Auto Regeneration Mode" section.

◆ **Regeneration Inhibit Mode;**
After starting the engine, if the "DPF INHIBIT switch" is pressed to turn on the switch lamp, the "Regeneration inhibit" mode will be activated.
With "Regeneration Inhibit" mode on, the PM which has accumulated inside the DPF will not be burnt, unless the operator performs the regeneration work manually.
The "Regeneration Inhibit" mode is effective for work in poorly ventilated work spaces.
For details of regeneration prohibition, refer to "Operating Procedure for Regeneration Inhibit Mode" section.

NOTE :
- If stop the engine once, the "Auto Regeneration" mode will be activated.

https://truckmanualshub.com/

■Operating Procedure for Auto Regeneration Mode

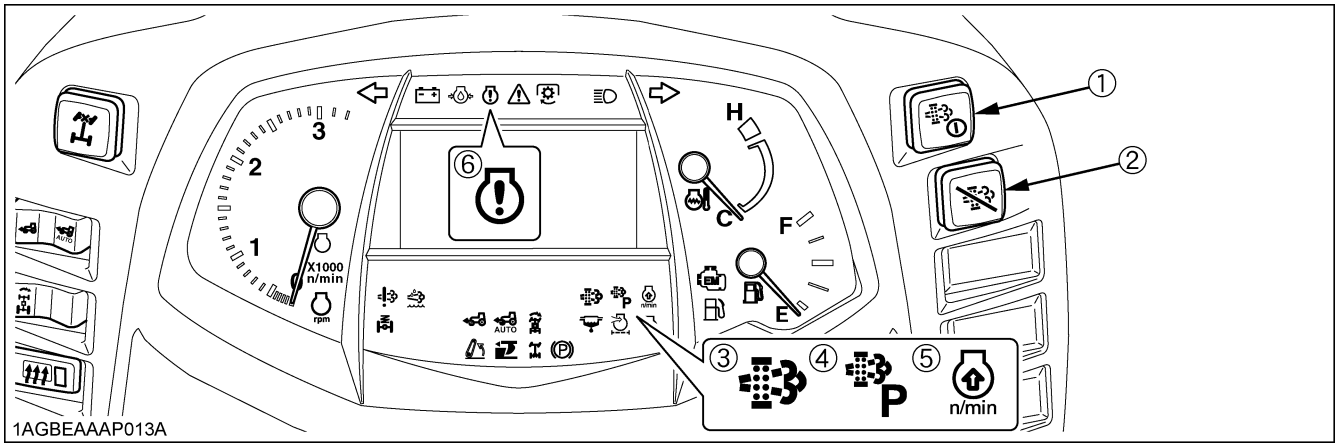

(1) Parked regeneration switch
(2) DPF INHIBIT switch
(3) Regeneration indicator
(4) Parked regeneration indicator
(5) Engine RPM increase indicator
(6) Engine warning indicator

◆ Regeneration Operating Procedure

1. Start the engine.
(Make sure that the DPF INHIBIT switch lamp is "OFF".)

Switch lamp OFF: Auto Regeneration Mode activated.
Switch lamp ON: Regeneration Inhibit Mode activated.

NOTE :
- When the engine is started, the "Auto Regeneration" mode is automatically activated.
- "Regeneration Inhibit" mode is activated, when the DPF INHIBIT switch is pushed after the engine is started.

2. When the regeneration indicator starts flashing:

A specific amount of PM has built up in the DPF.
Continue to operate the tractor, and the regeneration process will begin automatically, make sure the working place is in a safe area as DPF and exhaust temperature will rise.

3. When the engine rpm increase indicator

starts flashing:

Keep on working and increase the engine rpm until the indicator turns "OFF".

NOTE :
- Even if the Auto Regeneration Mode is selected, DPF regeneration may not begin because system requirements have not been satisfied.
- The engine rpm increase indicator is used as a guide to satisfy the regeneration conditions. If the engine load is too heavy, the engine rpm increase indicator may continue to flash, even though regeneration system conditions are satisfied and regeneration may begin automatically. (See the "Tips on Diesel Particulate Filter [DPF] Regeneration")

https://truckmanualshub.com/

◆ PM Warning Level and Required Procedures

During Auto Regeneration Mode when the PM level has built up in the DPF, the regeneration cycle will begin automatically. If the regeneration cycle is interrupted or the regeneration conditions are not satisfied, the buzzer starts sounding and the indicator display changes in response to the PM level in order to prompt the operator to perform the required procedure listed below.

IMPORTANT :

- Once the regeneration level has been reached, immediately perform the required procedure for regeneration. Interrupting the regeneration cycle or continued operation by ignoring the warning signs may cause DPF and engine damage.

Auto Mode		
DPF system status		Required procedure
PM warning level: **1** Buzzer: Not sounding	The regeneration indicator starts flashing.	A specific amount of PM has accumulated in the DPF muffler. Continue to work the tractor to raise the DPF temperature.
	The RPM increase indicator starts flashing.	Continue the work and increase the engine rpm until the indicator turns "OFF".
	The regeneration indicator will stop flashing and remain "ON" constantly.	The regeneration cycle begins and continues until cycle is complete then the indicator will turn "OFF".
PM warning level: **2-1** Buzzer: Sounding every 5 seconds	If the regeneration cycle was interrupted or conditions are not satisfied for regeneration then DPF system is now in Level 2.	
	The regeneration indicator starts flashing.	Start the regeneration, referring to PM warning level: 1 above. Now the parked regeneration indicator starts flashing, and the parked regeneration can also be started. If the regeneration conditions are not met, perform the parked regeneration. ● For the procedure, refer to "Operating Procedure for Parked Regeneration".
PM warning level: **2-2** Buzzer: Sounding every 3 seconds	The RPM increase indicator starts flashing.	
	The parked regeneration indicator starts flashing.	
PM warning level: **3** Buzzer: Sounding every 1 second Engine output: 50%	If the regeneration fails in the warning level 2:	
	The engine warning indicator starts flashing.	Immediately discontinue working the tractor and begin the parked regeneration cycle process. ● For the procedure, refer to "Operating Procedure for Parked Regeneration". At this PM warning level, the Auto Regeneration Mode does not function. If the tractor is operated further, the regeneration cycle will be disabled.
	The parked regeneration indicator starts flashing.	
PM warning level: **4** Buzzer: Sounding every 1 second Engine output: 50%	If the parked regeneration is interrupted or the tractor is continuously operated in the warning level 3:	
	The engine warning indicator remains constantly "ON".	Immediately move the tractor to a safe place and park it there and turn the engine "OFF". Contact your local KUBOTA Dealer. ● At this level, never continue to operate the tractor otherwise damage will result to the DPF and engine.

https://truckmanualshub.com/

■Operating Procedure for Regeneration Inhibit Mode

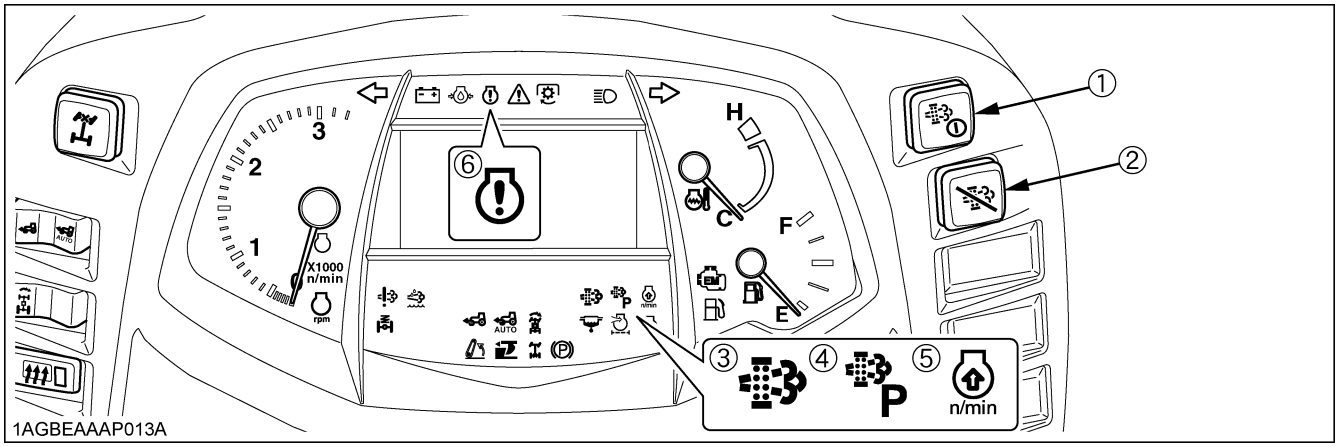

(1) Parked regeneration switch
(2) DPF INHIBIT switch
(3) Regeneration indicator
(4) Parked regeneration indicator
(5) Engine RPM increase indicator
(6) Engine warning indicator

◆ Regeneration Operating Procedure

1. Start the engine.

2. Press the DPF INHIBIT switch , and the switch lamp illuminates.

Switch lamp ON: Regeneration Inhibit Mode selected.
Switch lamp OFF: Auto Regeneration Mode selected.

3. When the parked regeneration indicator starts flashing:

A specific amount of PM has accumulated in the DPF muffler.
Move the tractor to a safe place and activates the DPF muffler. Follow the "Operating Procedure for Parked Regeneration" procedure.

https://truckmanualshub.com/

◆ PM Warning Level and Required Procedures

In the Regeneration Inhibit Mode, the buzzer starts sounding and the indicator display changes in response to the PM level in order to prompt the operator to perform the required procedure listed below.

IMPORTANT :

- Once the regeneration level has been reached, immediately perform the required procedure for regeneration. Interrupting the regeneration cycle or continued operation by ignoring the warning signs may cause DPF and engine damage.

Regeneration Inhibit Mode		
DPF system status		Required procedure
PM warning level: **1** Buzzer: Not sounding	The regeneration indicator starts flashing.	A specific level of PM has built up in the DPF muffler. Continue with the operation as it is.
	At PM warning levels range from 1 to 2-2, it is also possible to change DPF INHIBIT switch to auto regeneration mode then perform regeneration.	
PM warning level: **2-1** Buzzer: Sounding every 5 seconds	The regeneration indicator starts flashing.	Move the tractor to a safe area, then follow the "Operating Procedure for Parked Regeneration".
PM warning level: **2-2** Buzzer: Sounding every 3 seconds	The Parked regeneration indicator starts flashing.	
PM warning level: **3** Buzzer: Sounding every 1 second Engine output: 50%	If the parked regeneration cycle is interrupted or the tractor is continuously operated in the PM warning level 2:	
	The engine warning indicator starts flashing. The parked regeneration indicator starts flashing	Immediately stop working the tractor, move the tractor to a safe area, then follow the "Operating Procedure for Parked Regeneration". If the tractor is operated further and the operator ignores the warning signs, then regeneration will be disabled.
PM warning level: **4** Buzzer: Sounding every 1 second Engine output: 50%	If the regeneration cycle is interrupted or the tractor is continuously operated ignoring the warning signs, in the PM warning level 3:	
	The engine warning indicator remains constantly "ON".	Immediately move the tractor to a safe place and place in park, turn "OFF" engine. Contact your local KUBOTA Dealer. ● At this level never continue to operate the tractor, otherwise damage may result to the DPF and engine.

https://truckmanualshub.com/

■Operating Procedure for Parked Regeneration

1. Park the tractor in a safe area away from buildings, people, and animals.
2. Apply the parking brake.
3. Set the shuttle shift lever to the neutral position.
4. Turn "OFF" the PTO clutch control switch.
5. Return the engine rpm to the idle speed.
6. Lower the implement to the ground.
7. Press the DPF INHIBIT switch , and the switch lamp turns "OFF".
8. When the regeneration conditions are satisfied (2 to 5 and 7 mentioned above),
   the parked regeneration switch lamp start flashing.
9. Press the parked regeneration switch to start the regeneration cycle.
   (The switch lamp will stop flashing and remain "ON" constantly during the cycle.)
10. The engine rpm will automatically rise, and the regeneration process will begin.
11. Both indicators stay "ON" while regenerating the DPF.
    They turn "OFF" when the cycle is complete.
12. After the lamp turns "OFF", normal tractor work may resume.
    When driving in "Regeneration Inhibit" mode, press the DPF INHIBIT switch to turn on the switch lamp.

https://truckmanualshub.com/

NOTE :

- During the regeneration cycle, do not touch the above levers, and switches (in steps 2, 3, 4), nor change the engine rpm other than an emergency stop. Otherwise, the regeneration will be interrupted.
- Never leave the tractor when parked regeneration process is activated.
- If the parked regeneration cycle is interrupted, the engine rpm is fixed at the idling level for about 30 seconds. For this period, keep the hand throttle lever and foot throttle pedal at the idle position. Do not move them. They will function again in 30 seconds.
- If one of the following conditions applies to the tractor, the Parked Regeneration will not function.
  (See "Warning Indication and its Countermeasure" in "SELECTIVE CATALYTIC REDUCTION (SCR) MUFFLER" in "OPERATING THE ENGINE" section.)

  (1) DEF/AdBlue® warning indicator lights up and "Lv.1" or "Lv.2" is being displayed on the LCD.

  (Limited Engine Output)

  (2) DEF/AdBlue® system warning indicator lights up and the DTC are being displayed on the LCD.

  (3) Freeze icon of DEF/AdBlue® or Limited Engine Output is displayed on the LCD.

- DTC (Diagnostic Trouble Code)
  DTC can be used to diagnose the problem in engine and SCR muffler.
  (e.g. P208B: The code beginning with the letter "P" or "U" is the DTC)

https://truckmanualshub.com/

■Tips on Diesel Particulate Filter (DPF) Regeneration

- **Operation**
  The higher in speed or load the engine operates, the higher the exhaust temperature rises. As a result, particulate matter (PM) inside the DPF is consumed, therefore the regeneration process is required less frequently over time.
  The lower in speed or load the engine operates, the lower the exhaust temperature. Accordingly, less particulate matter (PM) inside the DPF is consumed, therefore more accumulation of PM will occur, which requires frequent regeneration, therefore avoid prolonged idling if possible.

- **Necessary conditions for "Regeneration"**
  When conditions below are all satisfied, regeneration will start. However, if even one condition is deviated during the process, the regeneration will be interrupted.
  (1) The engine coolant temperature.
  (2) The DPF temperature.
  (3) The engine speed is 1200 rpm or higher.

- Usually it takes 15-20 minutes to complete the regeneration cycle.
  Actual regeneration time may depend on ambient temperature, exhaust temperature and engine speed.

- It is recommended to do the regenerating while the engine is warm.

- Do not unnecessarily start and interrupt the regeneration process. Otherwise, a small amount of fuel becomes mixed with the engine oil, which degrades the oil quality.

- While the DPF is being regenerated, the engine air flow rate is automatically limited to keep up the exhaust temperature. Because of this the engine may sound differently, this is normal for this engine.

- Just after the regeneration has ended, the DPF muffler remains hot. It is advisable to keep the engine running for about 5 minutes to allow cooling of the exhaust components.

SELECTIVE CATALYTIC REDUCTION (SCR) MUFFLER

■Outline of the SCR

The injector jets urea aqueous solution (DEF/AdBlue®) into the muffler, and the solution is hydrolyzed with the heat of exhaust gas to generate ammonia (NH3).
The ammonia generated thus is mixed with exhaust gas by the SCR muffler. In this way, nitrogen oxides (NOx) contained in exhaust gases are reduced by ammonia and decomposed into nitrogen and water vapor.

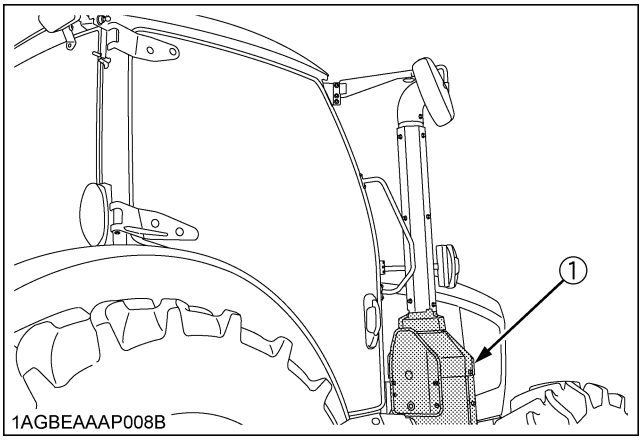

(1) SCR muffler

https://truckmanualshub.com/

■DEF/AdBlue®

CAUTION

To avoid personal injury:

- **The urea aqueous solution (DEF/AdBlue®) is colorless, odorless and harmless.**
  If the solution gets on your skin, immediately wash it away with water.

The DEF/AdBlue®, used as reducing agent of SCR, is a 32.5% urea aqueous solution.
No qualification for handling the urea aqueous solution is needed. As well, the solution is not designated as a hazardous material.
The product is available at gas stations, truck stops and specialty shops. Be sure to use the genuine product only. Do not use any poor-quality products, or the engine may have trouble and be damaged.

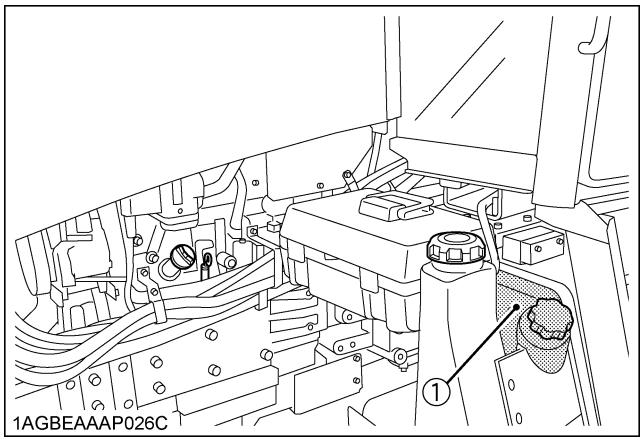

(1) DEF/AdBlue® tank (Blue cap)

NOTE :

- On the North American market, the high-grade NOx reducing agent called urea aqueous solution is sold in the name of DEF (Diesel Exhaust Fluid). On the European and Japanese markets, it is on sale under the trade name of AdBlue®.

■Warning Indication and its Countermeasure

Before starting the day's job, check the fluid level with the DEF/AdBlue® gauge on the instrument panel.
If the fluid runs short during operation, the warning indicator lights up. If you continue running the machine as it is, the engine output will be limited by 50% or so. If running is continued, the engine will be limited to idling.
For details, look at the table below.
These limitations are stipulated in conformity with the emission controls of each country and territory.

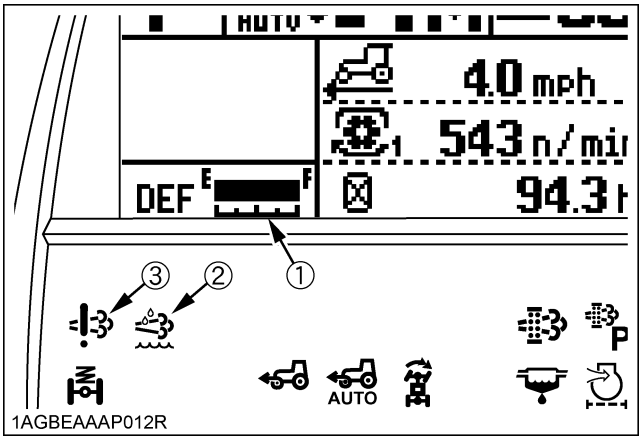

(1) DEF/AdBlue® gauge
(2) DEF/AdBlue® warning indicator
(3) DEF/AdBlue® system warning indicator

https://truckmanualshub.com/

◆ **SCR system inducement display on the LCD**

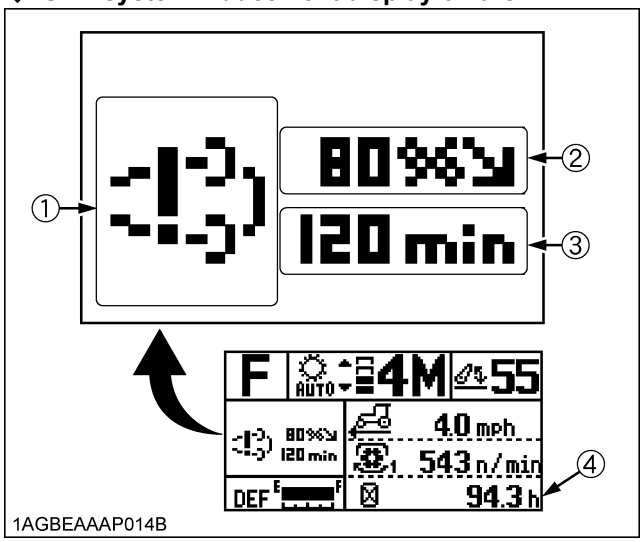

(1) SCR system icon
(2) Engine output level
(3) Time limit to next level or remaining DEF/AdBlue®
(4) Performance monitor (Error code and DTC)

◆ **SCR system icon appearing on inducement display**

	Low-level icon of DEF/ AdBlue®			Trouble icon of SCR system
	Poor-quality icon of DEF/ AdBlue®			Freeze icon of DEF/AdBlue®

◆ DTC (Diagnostic Trouble Code)
DTC can be used to diagnose the problem in engine and SCR muffler.
(e.g P208B: The code beginning with the letter "P" or "U" is the DTC)
If a DTC appears, immediately contact your local KUBOTA Dealer.

NOTE :

- When operating in cold weather, the DEF/AdBlue® is automatically thawed while the engine is running. However, in weather conditions of under -30℃ (-22℉), the DEF/AdBlue® cannot be completely thawed and thus, a DTC(P208B) appears on the instrument panel's LCD screen.
  If the DTC(P208B) appears on the screen, stop the engine and restart it after 10 seconds. After restarting the engine, the DTC(P208B) will disappear and the thawing of the DEF/AdBlue® will resume.
  In case the DTC(P208B) remains on the screen even after restarting the engine several times, contact your local KUBOTA Dealer.

https://truckmanualshub.com/

◆ **For SCR system inducement display appearing on LCD, refer to measures of the table below.**

On the SCR system, the remaining amount and quality of DEF/AdBlue® as well as machine troubles are monitored. If anything goes wrong during operation, the following warnings are issued. Follow the warning contents to take proper measures.

Displays	Warning indicator	status	Measures	DPF Parked Regeneration
		1	The amount of remaining DEF/AdBlue® has decreased up to 15% of the maximum capacity. Refuel the DEF/AdBlue® tank to reset the warning system. If operation is continued without refueling, the engine output will be limited.	permit
		2	The amount of remaining DEF/AdBlue® has decreased up to 5% of the maximum capacity. Refuel the DEF / AdBlue® tank. (*1) The engine output is limited to 50% (Lv.1: Level.1). If operation is continued without refueling, the engine output will be limited to Idle Status (Lv.2:Level.2).	inhibit
		2	The amount of remaining DEF/AdBlue® has decreased up to 5% of the maximum capacity. Refuel the DEF / AdBlue® tank. (*1) The engine output is limited to 50% (Lv.1: Level.1). If operation is continued without refueling, after 25 minutes, the engine output will be limited to Idle Status (Lv.2:Level.2).	inhibit
		3	The amount of remaining DEF/AdBlue® has decreased up to 5% of the maximum capacity. The engine output will remain limited. Refuel the DEF / AdBlue® tank. (*1) The engine output is limited to Idle Status (Lv.2:Level.2).	inhibit
		1	Contains poor quality DEF/AdBlue® or other non-regulated solutions. After draining the tank, refuel with DEF/AdBlue® to reset the warning system. If operation is continued without refueling the DEF/AdBlue® tank, after 60 minutes, the engine output will be limited to 50% (Lv.1:Level.1).	permit
		2	Contains poor quality DEF/AdBlue® or other non-regulated solutions. After draining the tank, refuel with DEF/AdBlue®. (*1) The engine output is limited to 50% (Lv.1: Level.1). If operation is continued without refueling the DEF/AdBlue® tank, after 25 minutes, the engine output will be limited to Idle Status (Lv.2:Level.2).	inhibit
		3	Contains poor quality DEF/AdBlue® or other non-regulated solutions. After draining the tank, refuel with DEF/AdBlue®. (*1) The engine output is limited to Idle Status (Lv.2:Level.2).	inhibit

*1 When DEF/AdBlue® has been added or a poor-quality solution replaced by a genuine product, the low-level warning indicator and icons go off. The engine output limitation will also be cleared.

https://truckmanualshub.com/

Displays	Warning indicator	status	Measures	DPF Parked Regeneration
120 min		1	The SCR system has experienced an abnormality. Verify the DTC displayed on the performance monitor and contact your local KUBOTA dealer. The engine output is unrestricted. After 120 minutes, the engine output will be limited to 50% (Lv.1:Level.1).	inhibit
80% 120 min		1	The SCR system has experienced an abnormality. Verify the DTC displayed on the performance monitor and contact your local KUBOTA dealer. The engine output is limited to 80%. After 120 minutes, the engine output will be limited to 50% (Lv.1:Level.1).	inhibit
Lv.1 25 min		2	The SCR system has experienced an abnormality. Verify the DTC displayed on the performance monitor and contact your local KUBOTA dealer. The engine output is limited to 50% (Lv.1: Level.1). After 25 minutes, the engine output will be limited to Idle Status (Lv.2:Level.2).	inhibit
Lv.2		3	The SCR system has experienced an abnormality. Verify the DTC displayed on the performance monitor and contact your local KUBOTA dealer. The engine output is limited to Idle Status (Lv.2:Level.2).	inhibit
	---	---	Due to low temperatures, the DEF/AdBlue® has frozen. Continue the warm-up operation and the DEF/AdBlue® will thaw.	inhibit
80%	---	---	Due to low temperatures, the DEF/AdBlue® has frozen. The engine output is limited to 80%. Continue the warm-up operation and the DEF/AdBlue® will thaw.	inhibit

https://truckmanualshub.com/

NOTE :

- The limited engine output level:
  Lv.1 (Level 1): Within 50% of max torque and 60% of engine speed.
  Lv.2 (Level 2): Within engine near idling speed.
- After an error has occurred, it may be necessary for the engine output to become limited to Lv.2(Level.2).
  Depending on trouble spots and contents, the indicator-prompted warnings and the engine output limits and timings may vary accordingly.
  The SCR warning status (from 1 to 3) represents the severity order of the engine output limitation. If the SCR system experiences abnormalities, an error code will be displayed, and it may be necessary to limit the engine output to Idle Status (Lv.2:Level.2).
  (e.g. When a P204F error code is displayed, the engine output changes from unrestricted to Lv.2 limited.)
- Points after taking measures.
  After the engine has stopped and the DEF/AdBlue® has drained, if the amount that was refueled is less than the pre-drain amount, the SCR system may experience a malfunction.(P20F5 error code is displayed)
  When the error occurs, turn the key switch to OFF, wait for the SCR system to complete the purge process (this may take several minutes) and then turn the key switch to ON again in order to clear the SCR system malfunction.
- The 40 hours warning record.
  (1) Basically Warning and/or inducement reduction cancel when the fault location is repaired.
  (2) However, if it detects any fault within 40 hours of the restoration, it soon becomes back to the previous failure and the timer restarts counting down.
  (3) The 40 hours warning record will be reset if any fault has not been detected over 40 hours from the repair.
  If a fault would be detected after the 40 hours warning record reset, then the new countdown will be stated.

https://truckmanualshub.com/

■Storing and Handling DEF/AdBlue®

1. Because DEF/AdBlue® is a urea aqueous solution, it begins to freeze at ambient temperatures below –11ºC (12ºF). In winter, handle it with enough care.
2. DEF/AdBlue® may be stored in the tractor's tank for up to 4 months. If the storage area's ambient temperature rises above 30ºC (86ºF), however, its storage life will be markedly reduced.

◆ **Storage method**

1. Store the solution in a well-sealed container.
2. Place the container in a location not exposed to direct sunlight.
3. Place the container in a well-ventilated spot.
4. Keep the container in a spot without violent temperature changes.
5. Keep the container away from any containers of gasoline and diesel fuel.

STARTING THE ENGINE

1. Make sure the parking brake is set.

Pull the parking brake lever up to park.
The parking brake indicator light on the Easy Checker(TM) will come on while the parking brake is set.

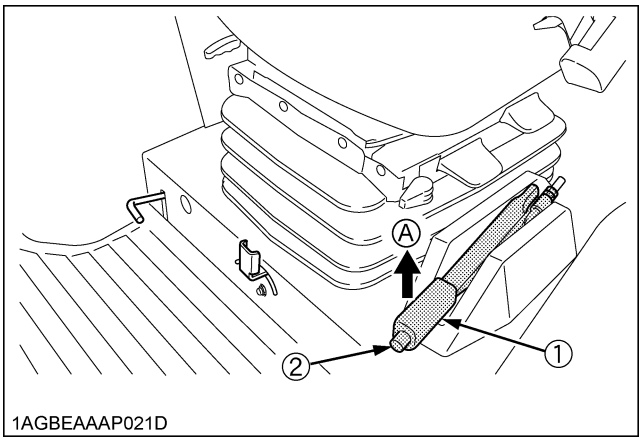

(1) Parking brake lever *(A) "PULL"*
(2) Release button

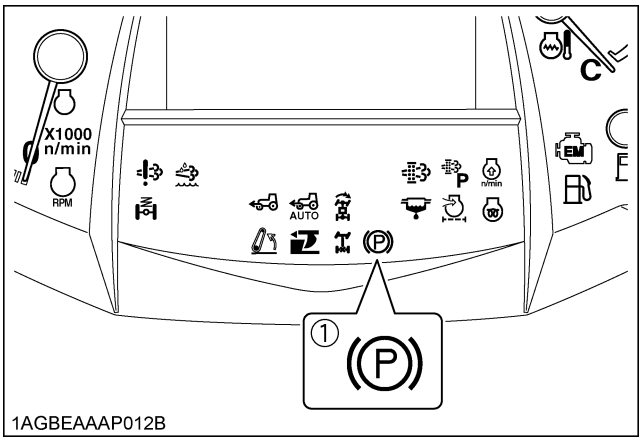

(1) Parking brake warning indicator

IMPORTANT :

- If the tractor is operated with the parking brake set, the parking brake will be damaged.

https://truckmanualshub.com/

2. Make sure the fuel shutoff-valve is in the "OPEN" position.

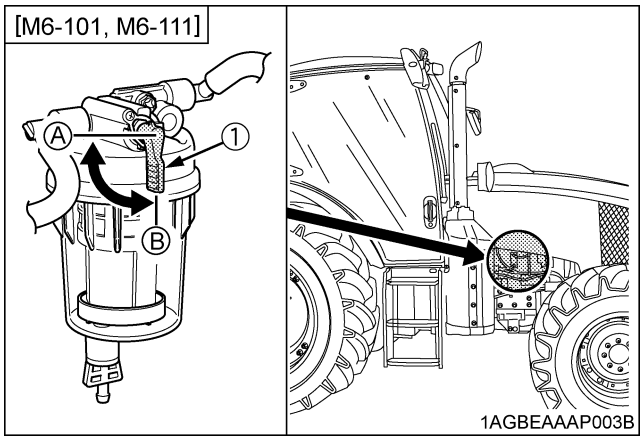

(1) Fuel shutoff-valve
(A) "CLOSE"
(B) "OPEN"

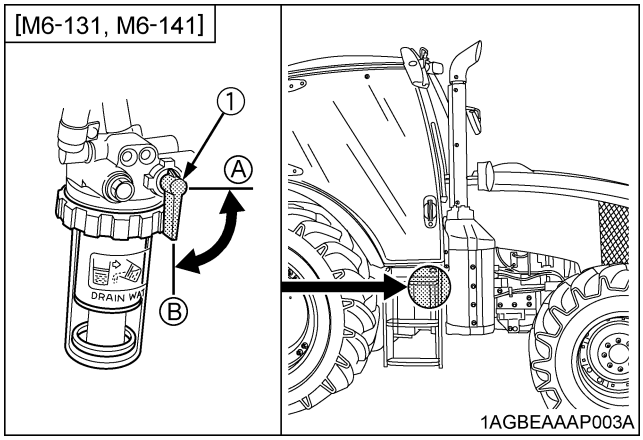

(1) Fuel shutoff-valve
(A) "CLOSE"
(B) "OPEN"

3. Place the shuttle shift lever in "NEUTRAL" position.

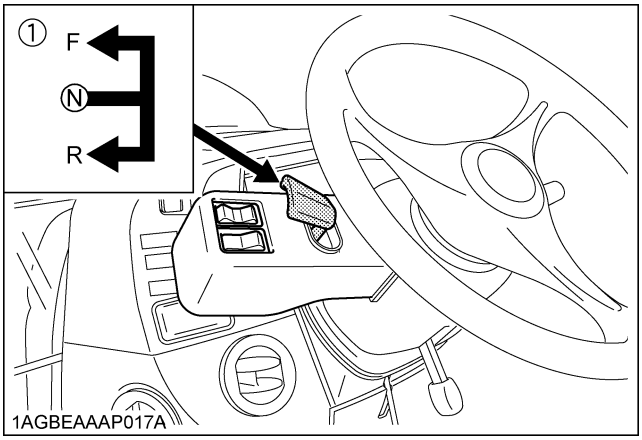

(1) Shuttle shift lever
(F) "FORWARD"
(N) "NEUTRAL POSITION"
(R) "REVERSE"

4. Place the power shift / range shift lever in "NEUTRAL" position.

Shift the lever to neutral.

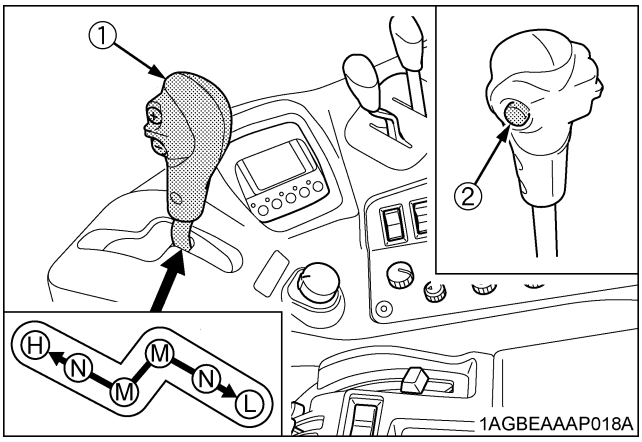

(1) Power shift / Range shift lever
(2) Clutch button
(H) "HIGH"
(M) "MIDDLE"
(L) "LOW"
(N) "NEUTRAL POSITION"

https://truckmanualshub.com/

5. Place the PTO clutch control switch in "OFF" position.

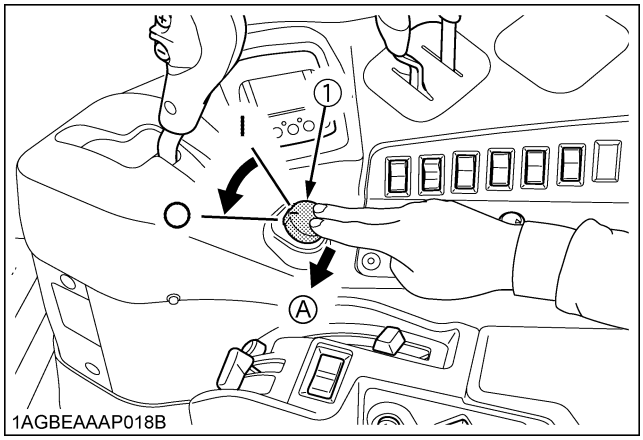

(1) PTO clutch control switch

| "ON" (Engaged)
○ "OFF" (Disengaged)
(A) "PUSH"

6. Set the throttle lever at the minimum speed position.

When the Rev-limiter control dial is set, the engine speed will not exceed the speed that is set. Even when the hand throttle lever is operated. Turn the dial all the way to the right to the "🐇" position.

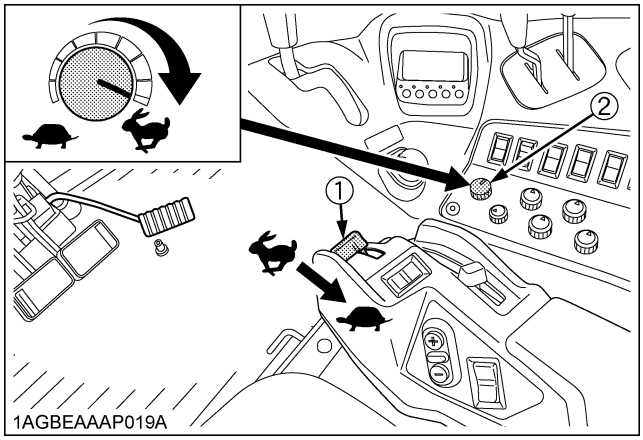

(1) Hand throttle lever
(2) Rev-limiter control dial

🐇 "INCREASE"
🐢 "DECREASE"

7. Insert the key into the key switch and turn it "ON".

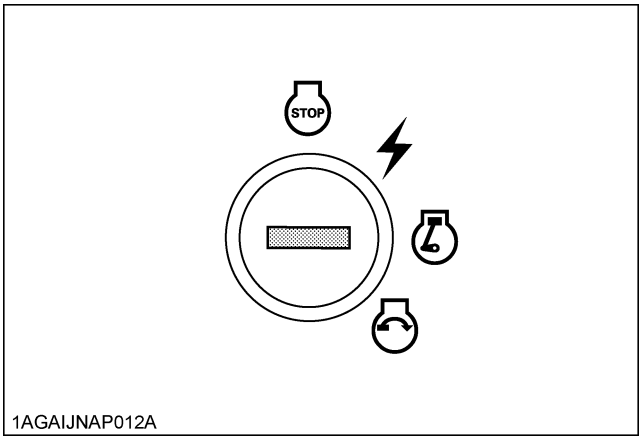

"OFF" (Engine-Stop)
"ON" (Engine-Run)
"ACC" (Electrical Power-accessories)
"START" (Engine-Start)

NOTE:

ACC...
- All the accessories can be used while the engine is stopped.
- Do not leave the key at "ACC" position. The battery will be quickly discharged. Turn it back to "OFF" after use.

https://truckmanualshub.com/

■ Check Easy Checker(TM) Indicators

Turn the key to "ON" position and all indications start flashing. Make sure the following indicators light up or turn off.

◆ **Indicators that light up: ..... (1), (2), (3), (7), (9), (10)**

1. Indicator (10) does not light up when the coolant temperature is 5 ℃ (41 ℉)or higher.
2. If indicator (7) does not light up, engage the parking brake.

◆ **Indicators that turn off: ..... (4), (5), (6), (8), (11)**

1. If indicator (4) lights up, turn the PTO switch to "OFF".
2. If indicator (11) lights up, add fuel.
3. If indicator (6) lights up, check to see icon on LCD. (See "Warning Indication and its Countermeasure" in "SELECTIVE CATALYTIC REDUCTION (SCR) MUFFLER" in "OPERATING THE ENGINE" section.)
4. If indicator (8) lights up, drain the water from the water separator.
5. If indicator (5) lights up, consult your local KUBOTA Dealer for this service.

IMPORTANT :

- If any of the indicators fail to light up, consult your local KUBOTA Dealer for this service.

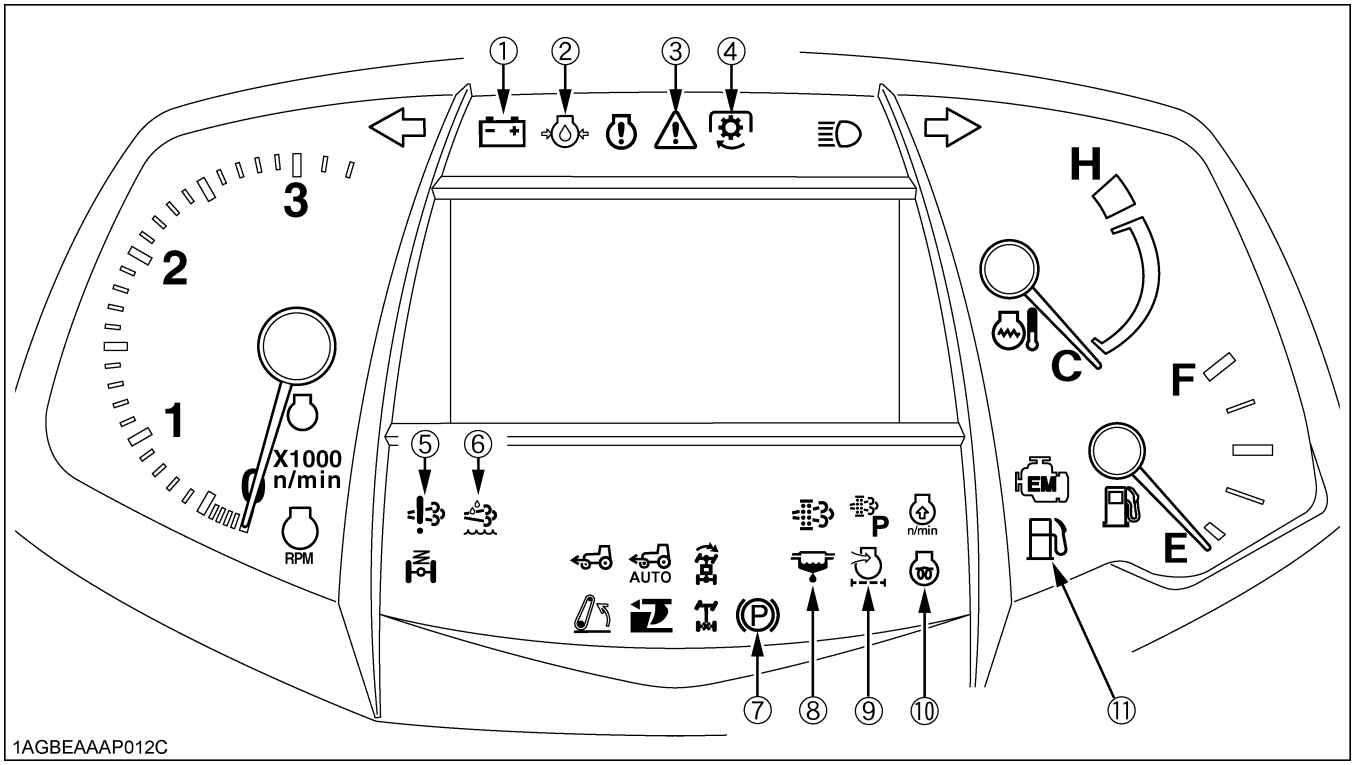

(1) Electrical charge warning indicator
(2) Engine oil pressure warning indicator
(3) Master system warning indicator
(4) PTO clutch indicator
(5) DEF/AdBlue® system warning indicator
(6) DEF/AdBlue® warning indicator
(7) Parking brake warning indicator
(8) Water separator indicator
(9) Air cleaner indicator
(10) Heater indicator
(11) Fuel level indicator

NOTE :

- Some of the Easy Checker(TM) indicators may light up or start flashing depending on the positions of the levers and switches on the right side panel.

IMPORTANT :

- Daily checks with the Easy Checker(TM) only, are not sufficient. Never fail to conduct daily checks carefully by referring to Daily Check. (See "DAILY CHECK" in "PERIODIC SERVICE" section.)

https://truckmanualshub.com/

8. Lower the implement.

1. Move the hydraulic control lever to "UP" position and then move it back to "LOWEST" position.
2. If the implement does not lower and the 3-P. Lifting / Lowering indicator starts flashing, push the 3-P. Quick lower switch and release the position lock. (The implement will lower and indicator light will turn off.) Then lower the implement to the ground using the hydraulic control lever.

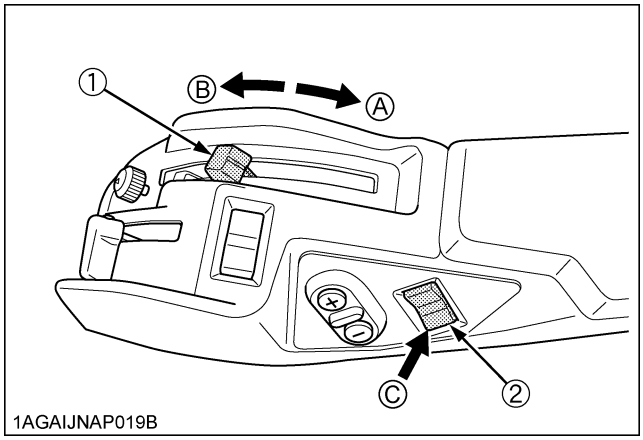

(1) Hydraulic control lever *(A) "UP"*
(2) 3-P. Quick lower switch *(B) "DOWN"*
(C) "PUSH"

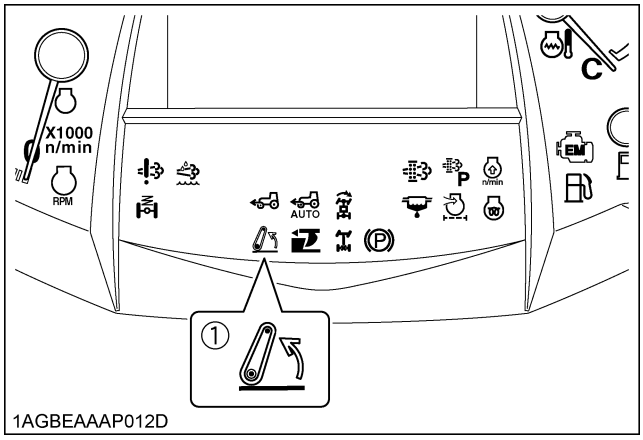

(1) 3-P. Lifting / Lowering indicator

NOTE :
- The implement does not go down if the 3-point hitch is "LOCKED" with 3-point hitch lowering lock lever. (For details, see "3-Point Hitch Lowering Lock Lever" in "3-POINT HITCH CONTROL SYSTEM" in "HYDRAULIC UNIT" section.)

9. Fully depress the clutch pedal, turn the key to "START" position and release when the engine starts.

IMPORTANT :
- Because of safety devices, the engine will not start except when the PTO clutch control switch is placed in the "OFF" position and power shift / range shift lever is placed in the "NEUTRAL" position.

10. Check to see that all the indicators on the Easy Checker(TM) are "OFF".

If an indicator is still on, immediately stop the engine and determine the cause.

◆ **Indicators that will turn off after starting the engine are: (1),(2),(3),(4),(5)**

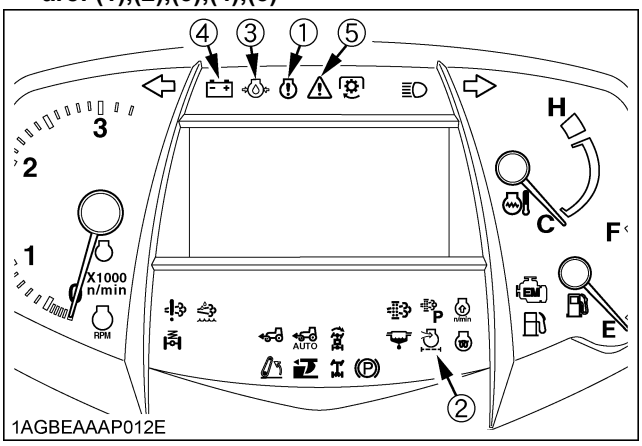

(1) Engine warning indicator
(2) Air cleaner indicator
(3) Engine oil pressure warning indicator
(4) Electrical charge warning indicator
(5) Master system warning indicator

11. Release the clutch pedal.

https://truckmanualshub.com/

COLD WEATHER STARTING

If the ambient temperature is below 0℃ (32℉) and the engine is very cold, follow the procedure below after taking the step 1 through 8 in the previous pages.

9. Turn the key to "ON" position and hold it until the heater indicator turns off.

Heater indicator comes on when the key is turned to "ON" position and engine coolant temperature is below 0℃ (32℉), and goes off automatically when preheat is completed.

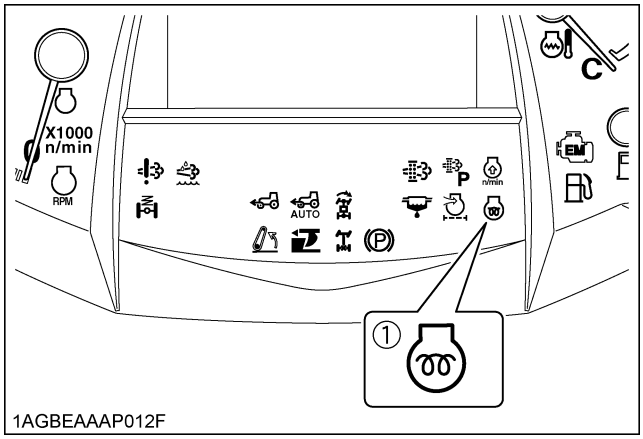

(1) Heater indicator

NOTE :

- During a cold start, the low temperature regulation indicator will appear on the LCD and the buzzer may sound once every 2 seconds. In this case, the engine speed will be limited to about 60%. If the operation is continued, the engine speed limit will gradually and automatically increase until the rotational speed will match the Foot throttle (or Hand throttle) strength.

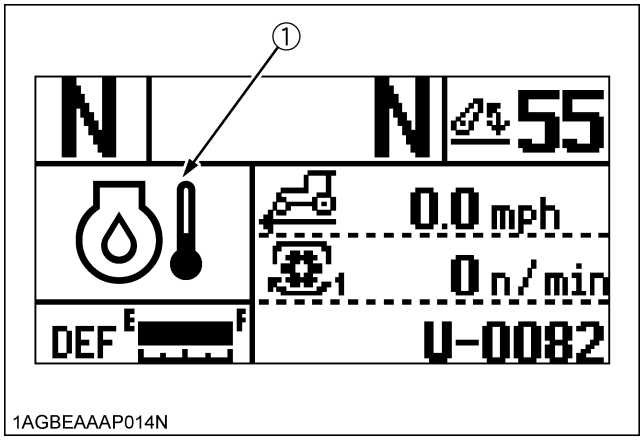

(1) Low temperature regulation indicator

10. Turn the key to the start position and the engine should start.

(If the engine fails to start after 10 seconds, turn off the key for 30 seconds. Then repeat steps 9 and 10. To protect the battery and the starter, make sure that the starter is not continuously turned for more than 10 seconds.)

NOTE :

- DEF/AdBlue® freezes at temperatures below -11℃ (12℉). Even if it is frozen, the engine is not affected at its start-up and running.

■Block Heater (if equipped)

A block heater is available as an option from your dealer. It will assist you in starting your tractor when the ambient temperature is below -20℃ (-4℉).

STOPPING THE ENGINE

1. After slowing the engine to idle, wait 3 to 5 minutes for turbo to slow down and then turn the key to "OFF".

2. Remove the key.

IMPORTANT :

- When the engine is stopped-shutdown, DEF/AdBlue® flow is reversed in the DEF/AdBlue® lines and related piping and returned back into the DEF/AdBlue® tank after cooling the DEF/AdBlue® injector.
  The SCR system continues working several minutes after engine shutdown to complete this purge process.
- Do not turn the machine main battery power off to the engine until the DEF/AdBlue® return cycle purge process is completed. Turning off the main battery power to the engine and aftertreatment system prior to completion may damage the system or cause it to malfunction.

NOTE :

- If key does not stop the engine, consult your local KUBOTA Dealer.

https://truckmanualshub.com/

WARMING UP

WARNING

To avoid personal injury or death:

- **Be sure to set the parking brake during warm-up.**
- **Be sure to set all shift levers to the "NEUTRAL" positions and to place PTO switch in "OFF" position during warm-up.**

For 5 minutes after engine start-up, allow engine to warm up without applying any load, this is to allow oil to reach every engine part. If load should be applied to the engine without this warm-up period, trouble such as seizure, breakage or premature wear may develop.

■Warm-up and Transmission Oil at Low Temperature Range

Hydraulic oil serves as transmission fluid. In cold weather, the oil may be cold with increased viscosity. This can cause delayed oil circulation or abnormally low hydraulic pressure for some time after engine start-up. This in turn can result in trouble in the hydraulic system.
To prevent the above, observe the following instructions:
Warm up the engine at about 50 % of rated rpm according to the table below:

Ambient temperature	Warm-up time requirement
Higher than 0 ℃ (32 ℉)	Approx. 5 minutes
0 to -10 ℃ (32 to 14 ℉)	10 to 20 minutes
-10 to -20 ℃ (14 to -4 ℉)	20 to 30 minutes
Below -20 ℃ (-4 ℉)	More than 30 minutes

IMPORTANT :

- Do not operate the tractor under full load condition until it is sufficiently warmed up.

JUMP STARTING

WARNING

To avoid personal injury or death:

- **Battery gases can explode. Keep cigarettes, sparks, and flames away from battery.**
- **If tractor battery is frozen, do not jump start engine.**
- **Do not connect the other end of the negative (-) jumper cable to the negative (-) terminal of the tractor battery.**

When jump starting the engine, follow the instructions below to safely start the engine.

1. Bring the helper vehicle with a battery of the same voltage as disabled tractor within easy cable reach. "THE VEHICLES MUST NOT TOUCH".
2. Engage the parking brakes of both vehicles and put the shift levers in neutral. Shut both engines off.
3. Wear eye protection and rubber gloves.
4. Attach the red clamp to the positive (red, (+) or pos.) terminal of the dead battery and clamp the other end of the same cable to the positive (red, (+) or pos.) terminal of the helper battery.
5. Clamp the other cable to the negative (black, (-) or neg.) terminal of the helper battery.
6. Clamp the other end to the engine block or frame of the disabled tractor as far from the dead battery as possible.
7. Start the helper vehicle and let its engine run for a few moments. Start the disabled tractor.
8. Disconnect the jumper cables in the exact reverse order of attachment. (Steps 6, 5 and 4).

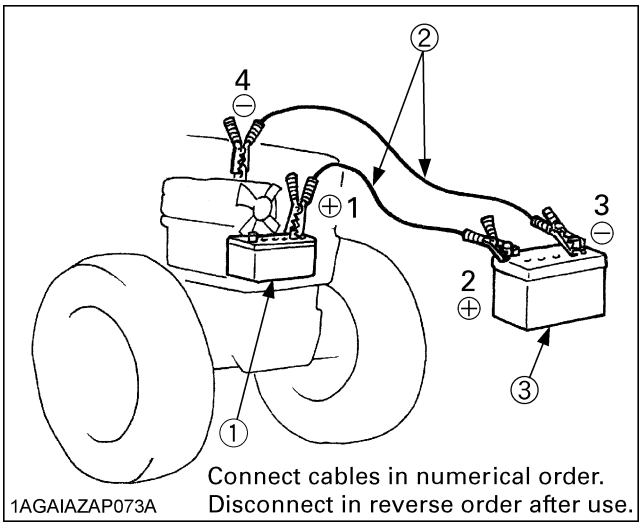

(1) Dead battery
(2) Jumper cables
(3) Helper battery

IMPORTANT :

- This machine has a 12 volt negative (-) ground starting system.
- Use only same voltage for jump starting.
- Use of a higher voltage source on tractor's electrical system could result in severe damage to tractor's electrical system.
  Use only matching voltage source when "Jump starting" a low or dead battery condition.
- Do not operate the tractor with the battery cable disconnected from the battery.
- Do not operate the tractor without the battery mounted.
- Do not operate the tractor with the battery dead. Charge the battery fully enough before operating the tractor.
  Otherwise the tractor might malfunction.

https://truckmanualshub.com/

OPERATING THE TRACTOR

OPERATING NEW TRACTOR

How a new tractor is handled and maintained determines the life of the tractor.

A new tractor just off the factory production line has been, of course, tested, but the various parts are not accustomed to each other, so care should be taken to operate the tractor for the first 50 hours at a slower speed and avoid excessive work or operation until the various parts become "broken-in". The manner in which the tractor is handled during the "breaking-in" period greatly affects the life of your tractor.

Therefore, to obtain the maximum performance and the longest life of the tractor, it is very important to properly break-in your tractor. In handling a new tractor, the following precautions should be observed.

■Do not Operate the Tractor at Full Speed for the First 50 Hours.

- Do not start quickly nor apply the brakes suddenly.
- In winter, operate the tractor after fully warming up the engine.
- Do not run the engine at speeds faster than necessary.
- On rough roads, slow down to suitable speeds. Do not operate the tractor at fast speed.

The above precautions are not limited only to new tractors, but to all tractors. But it should be especially observed in the case of new tractors.

■Changing Lubricating Oil for New Tractors

The lubricating oil is especially important in the case of a new tractor. The various parts are not "broken-in" and are not accustomed to each other; small metal grit may develop during the operation of the tractor; and this may wear out or damage the parts. Therefore, care should be taken to change the lubricating oil a little earlier than would ordinarily be required.

For further details of change interval hours.

(See "MAINTENANCE" section.)

BOARDING AND LEAVING THE TRACTOR

1. Never try to get on or off a moving tractor or jump off the tractor to exit.
2. Face the tractor when getting into or out of the tractor. Do not use the controls as hand holds to prevent inadvertent machine movements.
3. Always keep steps and floor clean to avoid slippery conditions.

STARTING

1. Adjusting the Operator's Position.

NOTE :

- The seat and suspension should be adjusted to ensure that the controls are comfortably at hand for the operator, ensuring that the operator maintains a good posture and minimizes risks from whole body vibration.

■Operator's Seat

WARNING

To avoid personal injury or death:

- **Make adjustments to the seat only while the tractor is stopped.**
- **Make sure that the seat is completely secured after each adjustment.**
- **Do not allow any person other than the operator to ride on the tractor.**

https://truckmanualshub.com/

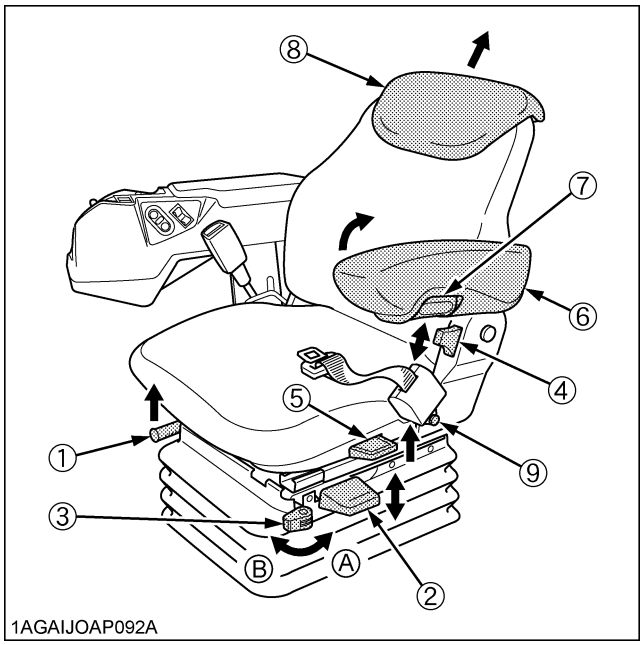

(1) Travel adjust lever
(2) Weight / Height adjust lever
(3) Fore/aft isolator
(4) Backrest tilt adjust lever
(5) Swivel adjust lever
(6) Arm rest
(7) Arm rest adjustment
(8) Backrest extension
(9) Button
(A) "ON"
(B) "OFF"

◆ Travel adjustment
Pull the travel adjust lever and slide the seat backward or forward, as required. The seat will lock in position when the lever is released.

◆ Weight and Height adjustment
Turn on the key switch. The seat should be adjusted for the operator's weight by briefly pulling up or pushing down the weight / height adjust lever with the tractor in a stationary position and the operator sitting on the seat.
The seat can be adjusted in its adjustable range.

NOTE :
- If the seat is lowered below the adjustable range, it automatically comes up to the lower limit of the adjustable range just when the weight / height adjust lever is released.
- When turning on the key switch, the seat may slightly move up depending on a preset seat position (height).

IMPORTANT :
- In order to avoid damage of the seat, do not operate the weight / height adjust lever for more than 1 minute.

◆ Fore / aft isolator
Set the isolator in "ON" position so that shock impacts in the direction of travel can be better absorbed by the seat.

◆ Tilt adjustment
Pull the backrest tilt adjust lever and tilt the backrest to the desired position.

◆ Arm rest (LH)
Armrest may be set at upright position if desired.

◆ Arm rest height adjustment (LH)
Turn the adjustment knob to the desired height of the armrests.

◆ Arm rest (RH)
The right arm rest height is adjustable. To reposition the arm rest height, loosen the knob nut and slide the arm rest upward or downward, and securely tighten it by hand so that you can operate the levers and switches comfortably.

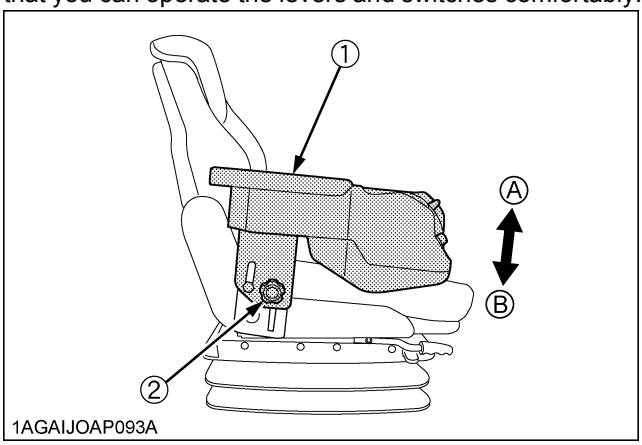

(1) Arm rest (RH)
(2) Knob nut
(A) "HIGH"
(B) "LOW"

◆ Backrest extension
Pull the backrest extension to the desired height.

◆ Swivel adjustment
Unlock the swivel adjust lever and rotate the seat right or left as desired.

NOTE:
Using the swivel seat
- Swivel the seat to the right and left to position yourself comfortably for jobs in which you need to look rearwards.
- Turn the seat to the left to facilitate getting in and out of the tractor.
- The seat can swivel in both directions.

https://truckmanualshub.com/

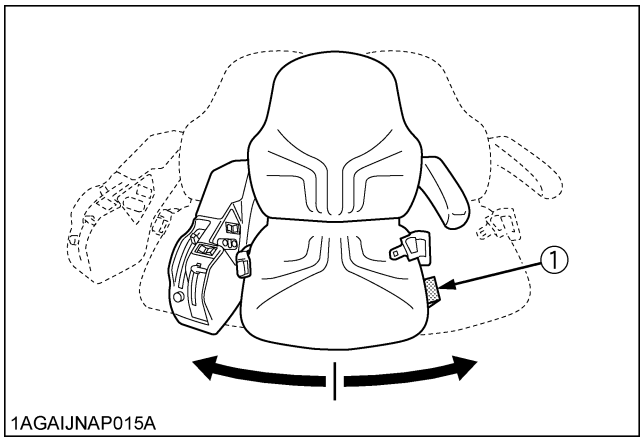

(1) Swivel adjust lever

■Seat Belt

WARNING

To avoid personal injury or death:

- **Always use the seat belt when any ROPS or CAB are installed.**

Pull the seat belt with the button being pushed, and connect the buckle.

After adjusting the seat belt for proper fit, release the button so that the belt can be locked.

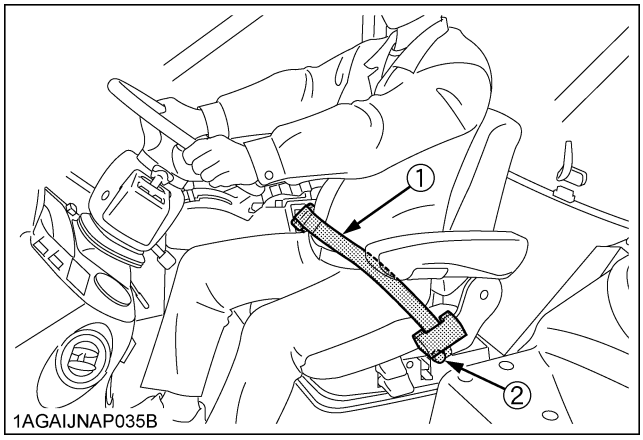

(1) Seat belt
(2) Button

■Instructional Seat

(if equipped)

◆ Intended use

The instructional seat is intended for training purposes. A tractor instructor, a trainee or a servicing staffer is supposed to use this seat of CAB-equipped tractors on flat, safe grounds, where the potential for roll-over is practically zero. Do not drive the tractor along expressways and public ways.

Understanding the above purposes, do not use this seat under any other conditions than specified.

The conditions which show as examples not to use this seat are as follows.

1. Do not allow any other persons and animals than the instructor, the trainee or servicing staffer on this seat.
   Never allow children to sit down on this seat.
   Do not place anything on this seat for transport purpose.
2. Use this seat only for training purpose, not for anything else.
3. Never use this seat on any locations where the machine might turn over. Never operate the machine prone to turn over, either.
   Slopes, rough terrains, high-speed running, sharp turns, towing, sudden starting and stopping etc.
4. Do not use this seat whenever the operator's view is affected by bad weather (rain, fog, etc.) or in the late afternoon.

WARNING

To avoid personal injury or death:

- **Always wear your seat belt and stabilize your body by holding the handrail on the CAB frame.**
- **It is not intended to carry children nor any other person for any other purposes.**
- **The left hand door must be closed at all time whenever the instructional seat is occupied and the tractor is in motion.**
- **Do not permit others to ride, except on the designated instructional seat.**
- **Use caution to avoid the risks of obstructing operator's view, falling from the machine and interfering with controls.**
- **Do not start and stop the tractor suddenly, nor take sharp turn.**
- **Do not use the instructional seat if the seat belt or the door lock fails to function.**
- **Do not use the instructional seat for transport.**
- **When opening and closing the door from the instructional-seat-sitting position, move the door slowly. This is to prevent his or her hand(s) from getting caught by the door or his or her body to hit against the door.**

https://truckmanualshub.com/

◆ Precautions in Using the Instructional Seat

- When getting on the tractor

1. The operator is supposed to move the tractor onto a flat surface and to apply the parking brake for a complete stop.
2. A instructor, a trainee or a servicing staffer is supposed to stand on the ground and to set up the seat. Before use, make sure the seat is securely fixed, and get on the tractor. In getting on the tractor, stabilize yourself by holding the specified handrail with attention not to get in contact with any control levers.
3. Fasten the seat belt and close the door. Then get the door locked.

- While the machine is in motion

1. The person on the instructional seat is supposed to get training with due care not to interfere with the operator's actions.
2. While in training, be sure to keep the seat belt fastened. The person on the instructional seat is supposed to grip the handrail to prevent him or her from getting out of balance due to violent machine movements.
3. Run the tractor at low speed.

- When getting off the tractor

1. The operator is supposed to move the tractor onto a flat surface and to apply the parking brake for a complete stop.
2. The person on the instructional seat is supposed to open the door, unfasten the seat belt and get out of the tractor.
3. Recouple the left and right halves of the seat belt.
4. Finally, close the door.

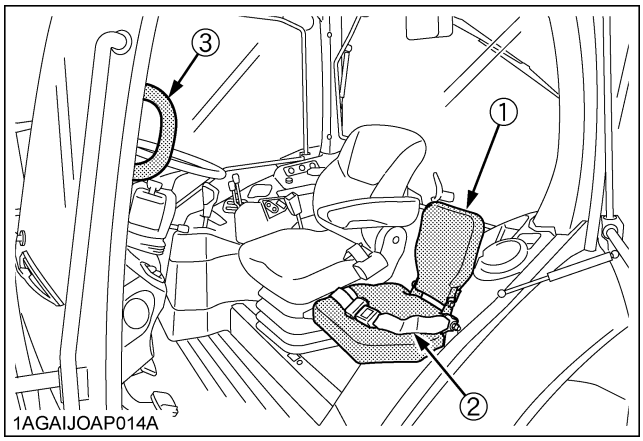

(1) Instructional seat
(2) Seat belt
(3) Handrail

NOTE :

- The instructional seat can be used only when permitted by your local laws.
  (Consult your local KUBOTA Dealer for further details.)

■ Steering Adjustment

CAUTION

To avoid personal injury:

- **Do not adjust the steering wheel while the tractor is in motion.**

Adjust the steering wheel to the best driving position using tilt and telescope levers.

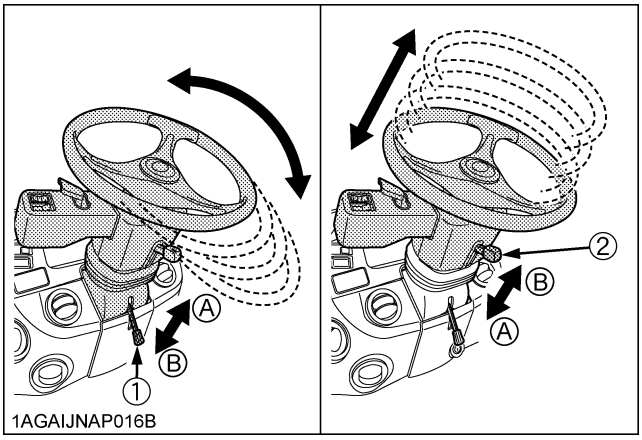

(1) Tilt lever *(A) "UNLOCK"*
(2) Telescope lever *(B) "LOCK"*

■ Extendable Mirror

1. To alter the length: Loosen the knob bolt and move the mirror to the required position, then tighten the knob bolt.
2. To adjust mirror head: Hold firmly, tilt horizontally and vertically as required.

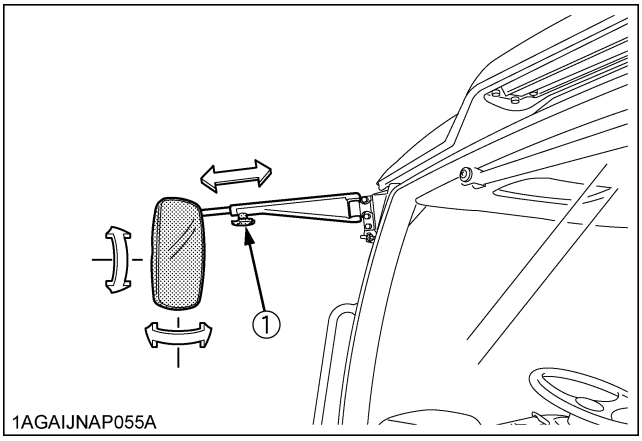

(1) Knob bolt

https://truckmanualshub.com/

2. Selecting Light Switch Position.

■Light Switch

1. Turn the key to the "ON" position.
2. Turn the switch knob clockwise, and the following lights are activated on the knob position.

OFF..... Head lights OFF.
..... Head lights dimmed, low beam.
..... Head lights ON, high beam.

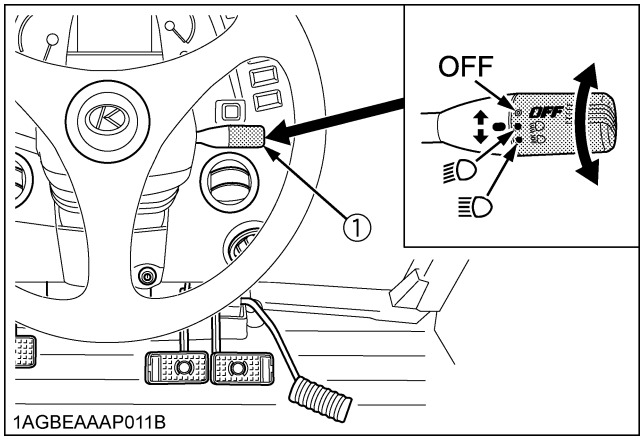

(1) Head light switch

NOTE :
- High beam indicator will be on when head light switch is in "high beam" position.

■Turn Signal / Hazard Light Switch

◆ **Hazard Light**

1. When the hazard light switch is pushed, the hazard lights flash, along with the L/H and R/H indicators on the instrument panel.
2. Push the hazard light switch again to turn off the hazard lights.

◆ **Turn Signal with Hazard Light**

1. To indicate a right turn with the hazard lights already flashing, turn the switch clockwise.
2. To indicate a left turn with the hazard lights already flashing, turn the switch counterclockwise.
3. When the left or right turn signal is activated in combination with the hazard lights, the indicated turning light will flash and the other will stay on.

◆ **Turn Signal without Hazard Light**

1. To indicate a right turn without hazard lights, turn the switch clockwise.
2. To indicate a left turn without hazard lights, turn the switch counterclockwise.
3. When the left or right turn signal is activated without the hazard lights, the indicated turning light will flash and the other will stay on.

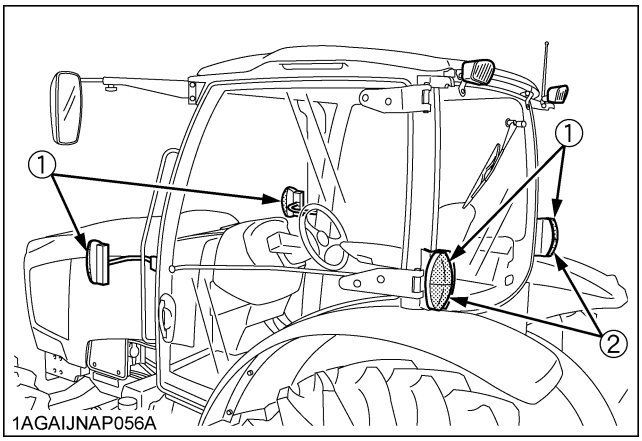

(1) Hazard / Turn signal light
(2) Tail / Turn signal light

NOTE :
- The hazard light switch is operative when the key switch is in either the "ON" or "OFF" position.
- The turn signal light switch is only operative when the key switch is in the "ON" position.
- Be sure to return the turn signal switch to center position after turning.

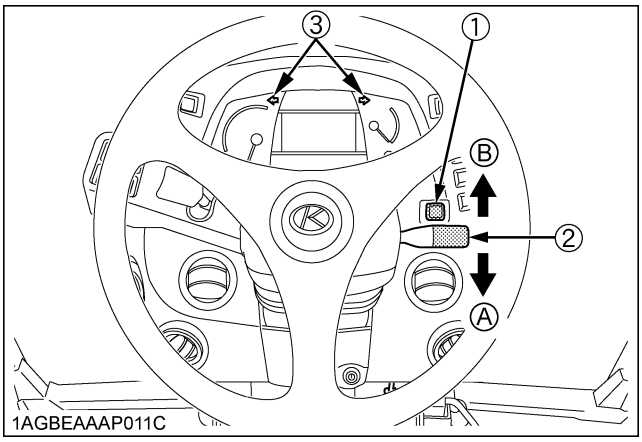

(1)Hazard light switch
(2)Turn signal light switch
(3)Hazard / Turn signal indicator
(A) "RIGHT TURN"
(B) "LEFT TURN"

https://truckmanualshub.com/

■Horn Button

The horn will sound when the key switch is "ON" position and horn button is pushed.

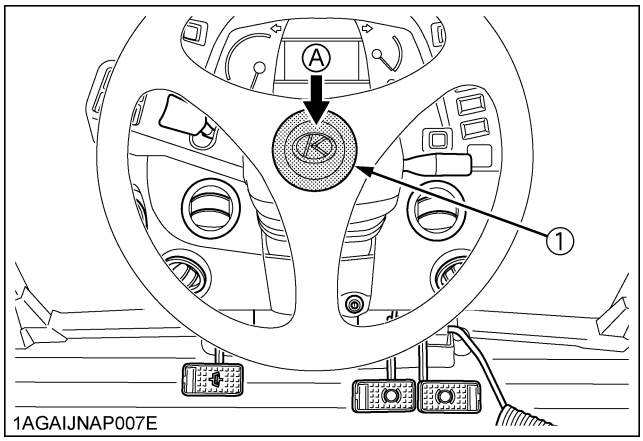

(1) Horn button *(A) "PUSH"*

■Work Light Switch (Front)

■Work Light Switch (Rear)

WARNING

To avoid personal injury or death:

- **Do not operate on roads with work lights on. Work lights may blind or confuse operators of oncoming vehicles.**

Turn on the key switch and press the bottom half of the work light switch. The work light and the switch's indicator light up. Press the top half of the work light switch to turn off the light and indicator.

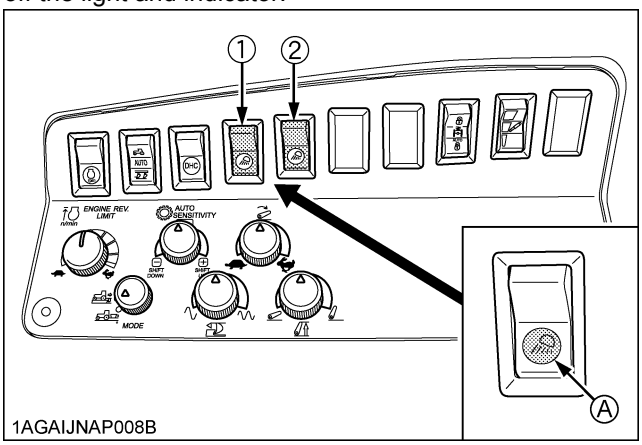

(1) Front work light switch *(A) Indicator for work lights*
(2) Rear work light switch

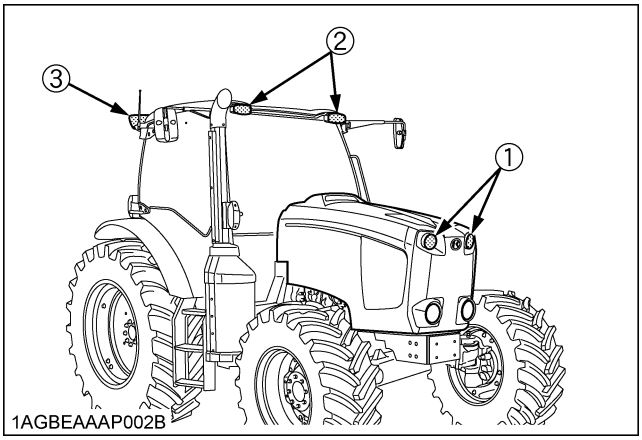

(1) Front work light (Hood)
(2) Front work light
(3) Rear work light

https://truckmanualshub.com/

3. Checking the Brake Pedal.

■Brake Pedals (Right and Left)

WARNING

To avoid personal injury or death:

- **Be sure to interlock the right and left pedals. Applying only one rear wheel brake at high speeds could cause the tractor to swerve or roll-over.**
- **Be sure brake pedals have equal adjustment when using locked together. Incorrect or unequal brake pedal adjustment can cause the tractor to swerve or roll-over.**

WARNING

To avoid personal injury or death:

- **Be aware of the enhanced braking characteristics of 4 wheel braking system. Appropriate care should be taken during hard braking and/or when pulling towed loads.**
- **Do not brake suddenly. An accident may occur as a result of a heavy towed load shifting forward or loss of control.**
- **To avoid skidding and less of steering control when driving on icy, wet, or loose surfaces, make sure the tractor is correctly ballasted, operated at reduced speed, operated with front wheel drive engaged (If equipped).**
- **The braking characteristics are different between 2 and 4-wheel drive. Be aware of the difference and use carefully.**
- **Engage 4-wheel drive for 4-wheel braking when traveling down a slope.**

1. Before operating the tractor on the road, be sure to interlock the right and left pedals as illustrated below.
2. Use individual brakes to assist in making sharp turns at slow speeds (Field Operation Only). Disengage the brake pedal lock and depress only one brake pedal.
3. Be sure brake pedals have equal adjustment when being used locked together.

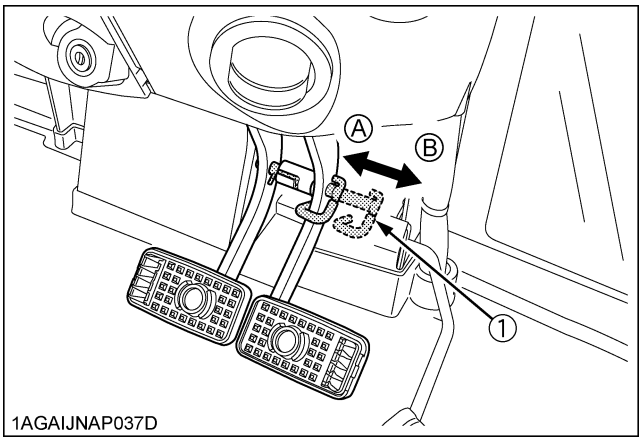

(1) Brake pedal lock *(A) "LOCK"* *(B) "RELEASE"*

◆ **4WD Braking System [4WD model]**

4WD model tractor is equipped with 4WD braking system. When both brake pedals are applied together, the front axle is engaged for 4-wheel braking regardless of the mode selected at the 4WD/Auto 4WD switch. The 4WD indicator light is not illuminated unless the front axle is engaged with the selector switch.

WARNING

To avoid the possibility of personal injury, death or property damage from machine runaway during testing, service or repair with the rear wheels off the ground, make sure:

- **Battery is disconnected and engine is not started.**

If it is necessary to run the engine, make sure:

- **Both front and rear wheels are off the ground and secured with stands before starting engine.**

https://truckmanualshub.com/

4. Raise the Implement. (see "HYDRAULIC UNIT" section.)

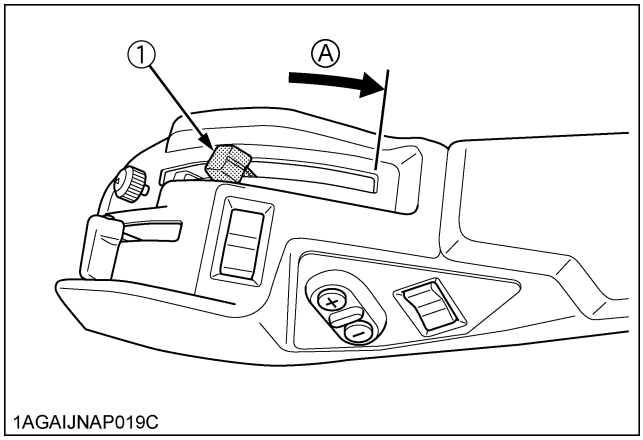

(1) Position control lever (A) "UP"

5. Depress the Clutch Pedal.

■Clutch Pedal

WARNING

To avoid personal injury or death:

- **Sudden release of the clutch may cause the tractor to lunge in an unexpected manner.**
- **Always use the clutch pedal to start the tractor.**

The clutch is disengaged when the clutch pedal is fully pressed down.

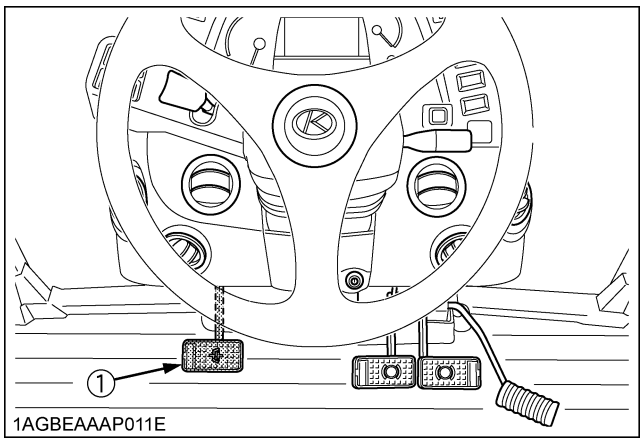

(1) Clutch pedal

IMPORTANT:

To help prevent premature clutch wear:

- The clutch pedal must be quickly disengaged and be slowly engaged.
- Avoid operating the tractor with your foot resting on the clutch pedal.
- Select proper gear and engine speed depending on the type of job.
- If the warning buzzer sounds too often during usual job, the tractor may require reprogramming. Consult your local KUBOTA Dealer for this service.

NOTE :

- If the clutch is operated in a partially engaged condition, the clutch will disengage automatically and the warning buzzer will sound to protect the clutch. Take one of the following steps to stop the buzzer. Do not let the buzzer sound continuously.

  1. Fully depress the clutch pedal.
  2. Press the clutch button on the power shift / range shift lever.
  3. Shift the shuttle lever to "NEUTRAL".

6. Selecting the Travel Speed.

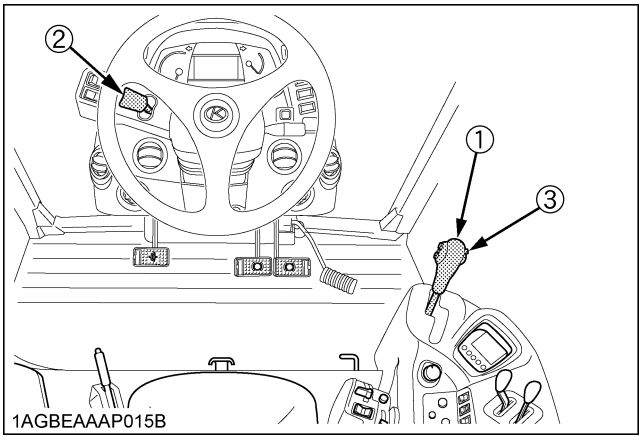

(1) Power shift / Range shift lever (PS. Lever)
(2) Shuttle lever
(3) Clutch button

By combination of using the Power shift / Range shift lever and Shuttle lever, forward speeds and reverse speeds shown in the table below are obtained.

Standard model	Without creep	24 forward speeds 24 reverse speeds
	With creep (option)	32 forward speeds 32 reverse speeds

https://truckmanualshub.com/

WARNING

To avoid personal injury or death:

- **Use the clutch when making an emergency stop or working in confined areas, such as getting the tractor in position to attach an implement.**
- **An accident may occur with erratic shifting operation.**
  For safe operation, push up-shift or down-shift buttons only one gear at a time.
- **Avoid changing gears when climbing or descending a slope.**
- **Before ascending or descending a slope, shift to a gear low enough to control the tractor speed without using brakes.**
  If you shift gears while ascending or descending a slope, be prepared to use the brakes to maintain control.
- **Operate in reverse at slow speeds to maintain control.**

■Power Shift / Range Shift Lever (PS. Lever)

1. When changing speeds, there is no need to use the clutch.
   Press the up-shift or down-shift buttons, and the speeds 1 thru 8 can be selected. (A beep tone is heard at each speed change.)
2. To select a speed range (H, M or L), stop the machine with depressing the clutch pedal.
   Then hold down the clutch button on the PS. lever and shift the PS. lever to the desired position. By utilizing the combination of PS. lever and 8 shift button positions, 24 speeds can be obtained.
3. The selected speed (1 to 8) and speed range (H, M, L or N) are displayed on the instrument panel.

WARNING

To avoid personal injury or death:

- **If you release the clutch button when the power shift/range shift lever is at the position "L" "M" or "H", the clutch becomes engaged and the tractor will begin to move.**
- **Always use the clutch pedal to start the tractor.**

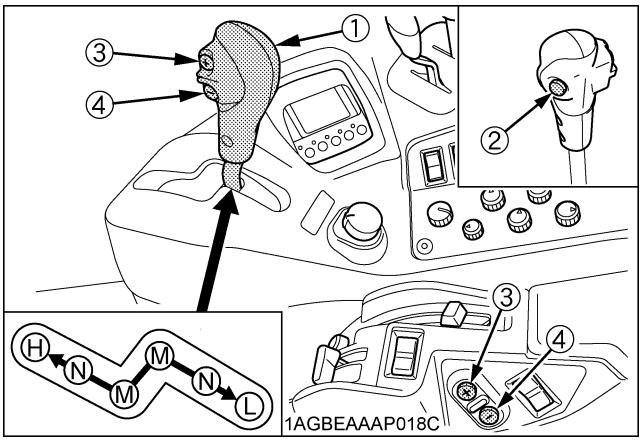

(1) Power shift / Range shift lever (PS.Lever)
(2) Clutch button
(3) Up-shift button
(4) Down-shift button
(H) "HIGH"
(M) "MIDDLE"
(L) "LOW"
(N) "NEUTRAL POSITION"

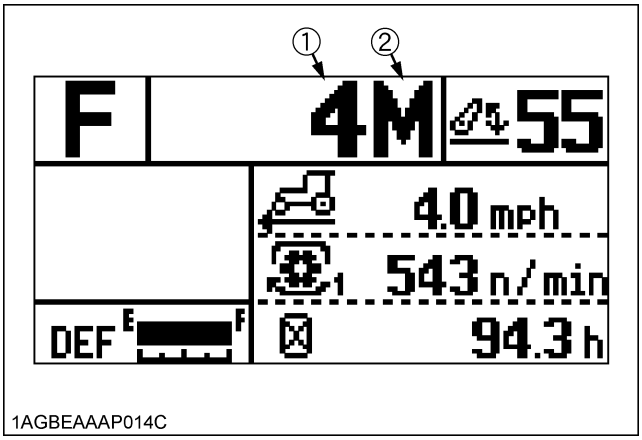

(1) Selected-speed (1 to 8)
(2) Selected-speed range (H, M, L or N)

NOTE :

- If the Hydraulic shuttle lever is at "FORWARD or REVERSE", when you move the PS. lever to "H", "M" or "L" without pressing the clutch button, the alarm buzzer sounds and the tractor does not move.
  ("E" appears in the selected-speed display.)
  To stop the buzzer and restart the tractor:
  (1) Move the PS. lever back to "N".
  (2) Holding down the PS. lever's clutch button, move the lever to "H", "M" or "L".
  (3) Release the clutch button, and the tractor will move.

https://truckmanualshub.com/

◆ **Basic operation**

1. Start the engine, select a speed range "L", "M" or "H" with the PS. lever, and the tractor is set at low speed (1), middle speed (1) [9th] or high speed (1) [17th]. ("1" appears on the display.)
2. With the PS. lever at "NEUTRAL", select a speed (1st to 8th) first using the button and then a speed range, the selected speed with button is obtained.
3. With the PS. lever at "NEUTRAL" and hold down the button, the speeds change themselves continuously. (1st to 8th or 8th to 1st)
4. With a speed range "L", "M" or "H" selected, depressing the button changes the speeds. If the shuttle lever is set at "NEUTRAL" or the clutch pedal stays "DISENGAGED", however, the speeds change themselves continuously. (1st to 8th or 8th to 1st)
5. Main gear shift speed memory function:
   Suppose that a job was done at a travel speed, the speed range (L, M, H) was changed and then the original speed range was returned. The memory function serves to automatically pick up the previously selected main gear number.
   Only when the speed range is “H” and the main gear shift is somewhere between Speed 4 (20th) and Speed 8 (24th), however, the “H-3” speed (19th) is automatically selected.

- Memorized speed

<table>
<tr><td colspan="5">Power shift / Range shift lever</td></tr>
<tr><td>L1~8
(1st to 8th)</td><td>⇨
Shift up</td><td>H1~8
(17th to 24th)
M1~8
(9th to 16th)</td><td>⇨
Shift down</td><td>L1~8
(1st to 8th)</td></tr>
<tr><td>M1~8
(9th to 16th)</td><td>⇨
Shift up</td><td>H1~8
(17th to 24th)</td><td>⇨
Shift down</td><td>M1~8
(9th to 16th)</td></tr>
<tr><td>M1~8
(9th to 16th)</td><td>⇨
Shift down</td><td>L1~8
(1st to 8th)</td><td>⇨
Shift up</td><td>M1~8
(9th to 16th)</td></tr>
<tr><td>H1~3
(17th to 19th)</td><td rowspan="2">⇨
Shift down</td><td rowspan="2">L1~8
(1st to 8th)</td><td rowspan="2">⇨
Shift up</td><td>H1~3
(17th to 19th)</td></tr>
<tr><td>H4~8
(20th to 24th)</td><td>H3
(19th)</td></tr>
<tr><td>H1~3
(17th to 19th)</td><td rowspan="2">⇨
Shift down</td><td rowspan="2">M1~8
(9th to 16th)</td><td rowspan="2">⇨
Shift up</td><td>H1~3
(17th to 19th)</td></tr>
<tr><td>H4~8
(20th to 24th)</td><td>H3
(19th)</td></tr>
</table>

NOTE :

- Turn off the key switch, and the memory will be cleared.

IMPORTANT :

- Before selecting a speed range, be sure to stop the tractor. Step on the brake pedal and shift the PS. lever slowly.
- When you have shifted the PS. lever to "L", "M" or "H" range, be sure to look at the indicator for the power shift position. Then release the clutch button or the clutch pedal.
- Start in lower gears and shift one gear at a time until desired gear is obtained.
- To prolong clutch life, avoid slipping the hydraulic clutch. Pay attention to the following points:
  - Select proper gear and engine speed depending on the type of job.
  - Avoid lugging the engine, especially in higher gears. If RPM's drop excessively, shift to a lower gear.
- In cold climate, it may take longer for the tractor to move after the PS.lever is moved. This is because the transmission oil must warm up.
  - Properly warm up the machine. If there is not enough time to do so, start the machine with the clutch pedal slowly.
  - There is no problem with a delay in starting.
    The machine will start as the oil temperature increases.

https://truckmanualshub.com/

■DHC switch

On this tractor, the engine load and other fluctuations are sensed and the speed is well controlled in response to the loads. Turn the DHC switch "ON" when using a traction PTO attachment (baler, etc.) on a slope. A well responsive speed control can be expected. In other applications, turn this switch "OFF". Smooth speed change is available for comfortable ride.

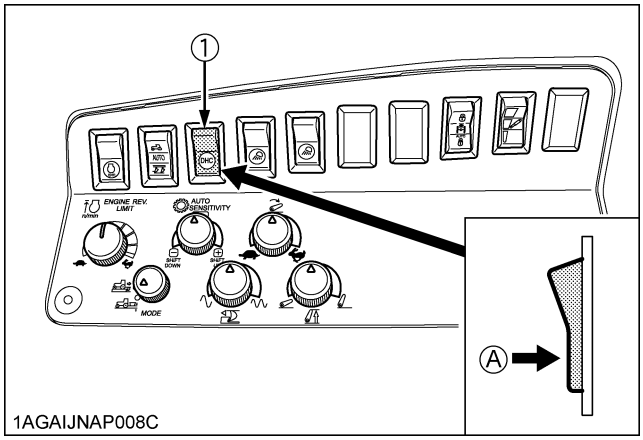

(1) DHC switch *(A) "Push to ON"*

NOTE :

- While the DHC switch is at "ON", the hydraulic clutch behaves quicker at a speed change. Even working on a slope, therefore, the push-out of an attachment can be minimized. (Do not change speeds when doing heavy-duty traction on a steep slope.)

■Shuttle Lever

WARNING

To avoid personal injury or death:

- **When attempting to shift the shuttle shift lever on a slope, be sure to completely stop the tractor.**
- **Slow down the engine speed before shifting the shuttle lever.**
- **Use the shuttle lever when the machine speed is below 11 km/h (6.8 mph).**

NOTE :

- Otherwise the clutch gets disengaged and the buzzer starts sounding.
  To get the clutch reengaged and clear the buzzer, take either of the following steps.
  (1) Place the shuttle lever back to the original position. Decrease the machine speed lower than 11 km/h (6.8 mph) and use the shuttle lever.
  (2) Stop the tractor first and bring the shuttle lever back to the original position.

Raise up and shift the shuttle shift lever forward to obtain forward speeds and shift it backward to obtain reverse speeds without using the clutch pedal.
With the shuttle lever at neutral, press the up-shift/down-shift button of the power shift / range shift lever, select the main speed (1st thru 8th speed) and then switch the sub-speed range. Now the selected main speed is kept on whether at "L", "M" or "H".

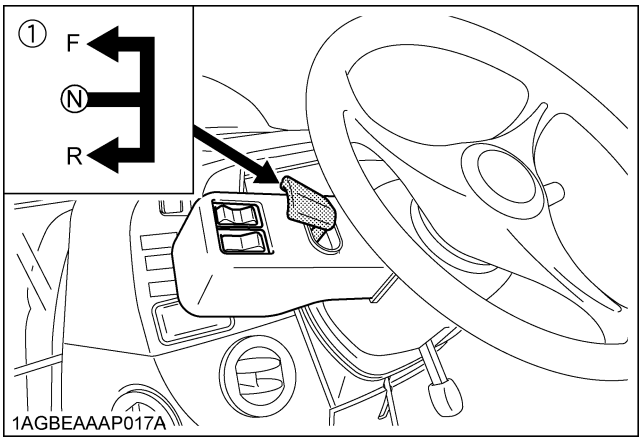

(1) Shuttle lever *(F) "FORWARD"*
(N) "NEUTRAL"
(R) "REVERSE"

NOTE :

- While the shuttle shift lever is at the "NEUTRAL" position, the "N" character appears on the LCD monitor.

https://truckmanualshub.com/

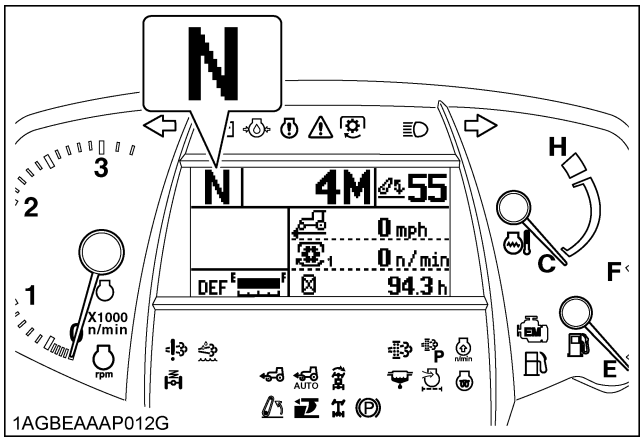

(N) "NEUTRAL"

■Creep Lever (if equipped)

Shift the creep lever at "" to obtain low speeds with power shift / range shift lever is selected "L" range.
With the creep lever engaged (ON), the speed range cannot shift to "M" and "H". (The creep mode does not operate in the middle-speed and high-speed ranges.)
This shifting requires clutch operation.

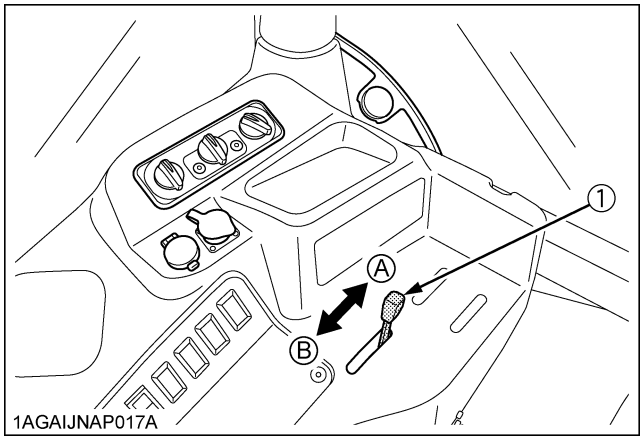

(1) Creep Lever
(A) "LOW".....Creep ON
(B) "HIGH".....Creep OFF

◆ **Creep speed should be used only when doing one of the following jobs:**

1. Deep rotary-tilling and harrowing
2. Planting
3. Turf application

◆ **Creep speed can not be used for any of the followings:**

1. Pulling a trailer
2. Front-loader operation
3. Front-blade operation
4. Earth-moving
5. Entering and leaving a field
6. Loading onto and unloading from a truck

WARNING

To avoid personal injury or death:

- **When you leave the tractor, be sure to apply the parking brake and stop the engine.**
- **IN APPLYING THE BRAKES:**
  - **The torque of the wheel axle is extremely high while creep speed is being used. Be sure to step down on the clutch pedal completely before applying the brakes, or the torque will overcome the brakes.**
  - **When starting to operate the tractor, be sure to release the parking brakes.**
    Misuse of the brakes may cause damage to the transmission and is therefore not acceptable to KUBOTA for coverage under the warranty.

IMPORTANT :

- Press the clutch pedal completely down and stop the tractor's motion before shifting the range gear shift lever.

■4WD / Auto 4WD Switch

WARNING

To avoid personal injury or death:

- **Do not engage the front wheel drive when traveling at road speed.**
- **When driving on icy, wet, or loose surfaces, make sure the tractor is correctly ballasted to avoid skidding and loss of steering control. Operate at reduced speed and engage front wheel drive.**
- **4WD model tractor is equipped with 4 wheel braking and appropriate care should be taken during hard braking.**
- **An accident may occur if the tractor is suddenly braked, such as by heavy towed loads shifting forward or loss of control.**
- **The braking characteristics are different between 2 and 4-wheel drive tractor models. Be aware of the difference and use carefully.**

Press the left half;

The 4WD mode activates.
The 4WD indicator comes on.

https://truckmanualshub.com/

Press the right half;

The Auto 4WD mode activates.
The Auto 4WD mode will automatically switch between 2WD mode and 4WD mode depending on the travel speed.
The display indicators are as follows:

	Auto 4WD indicator	4WD indicator
Less than 20 km/h (12.4 mph)	ON	ON
More than 20 km/h (12.4 mph)	ON	OFF

It returns to a central position;

The drive system returns to 2WD mode
The all indicators goes off when the system is in 2WD mode.

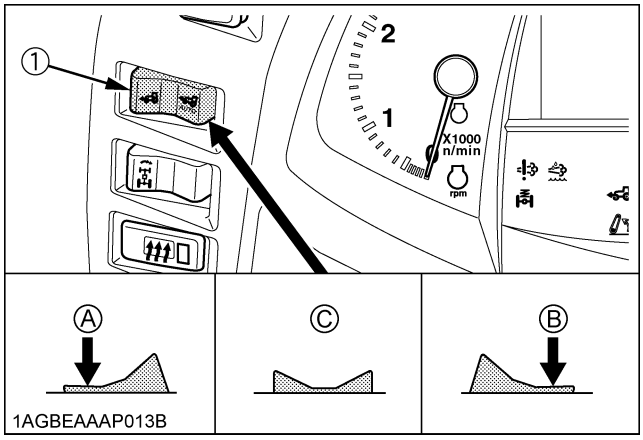

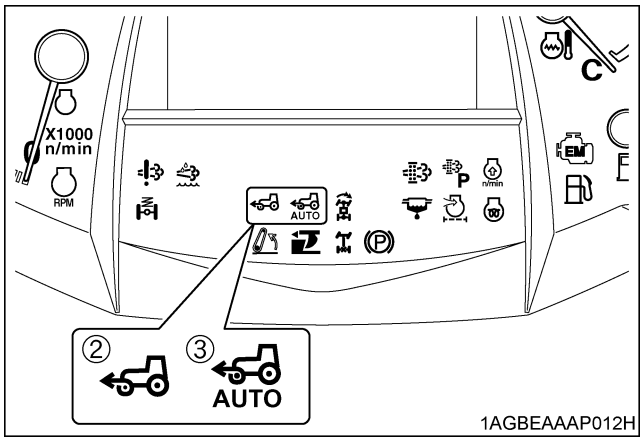

(1) 4WD/Auto 4WD switch
(2) 4WD indicator
(3) Auto 4WD indicator
(A) 4WD mode
(B) Auto 4WD mode
(C) 2WD mode

NOTE :
- This switch can be operated when the tractor is on the go or at rest without depressing the clutch.

◆ **Front wheel drive is effective for the following jobs:**
1. When greater pulling force is needed, such as working in a wet field, when pulling a trailer, or when working with a front-end loader.
2. When working in sandy soil.
3. When working on hard soil where a rotary tiller might push the tractor forward.
4. For increased braking at reduced speed.

◆ **The effectiveness of the Auto 4WD mode**
5. There is no hassle of switching between 2WD/4WD.
6. In regards to rolling resistance, it is possible to reduce tire wear and to save fuel.
7. Taking corners at high speeds can be done effortlessly.

IMPORTANT :
- Tires will wear quickly if the front wheel drive is engaged on paved roads.

■Bi-speed Turn Switch

WARNING

To avoid personal injury or death:
- **Do not use "Bi-speed Turn" at high speed.**
- **"Bi-speed Turn" enables short and fast turns, therefore, become familiar with its performance before operating in close or confined areas.**

When 4WD indicator or Auto 4WD indicator light up, the Bi-speed turn system works.

Press the left half;

The Bi-speed turn system activates.
The Bi-speed turn indicator come on.

It returns to a central position;

The Bi-speed turn system deactivates
The Bi-speed turn indicator goes off.

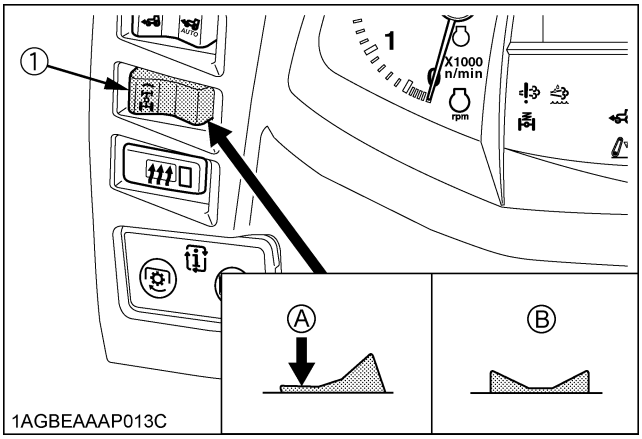

https://truckmanualshub.com/

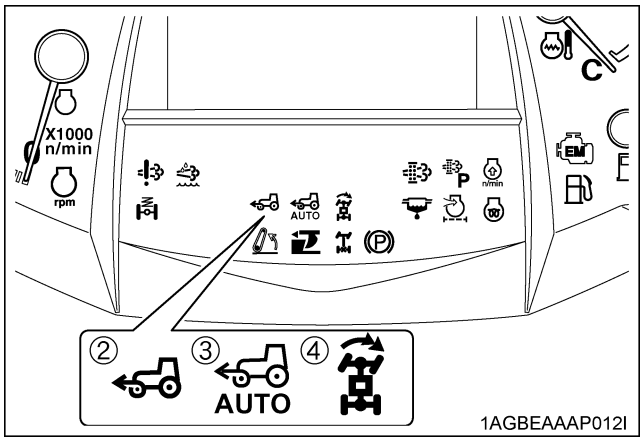

(1) Bi-speed Turn switch
(2) 4WD indicator
(3) Auto 4WD indicator
(4) Bi-speed turn indicator

(A) Bi-speed turn "ON"
(B) Bi-speed turn "OFF"

NOTE :

- This switch can be operated when the tractor is on the go or at rest without depressing the clutch.
- Bi-speed turn system works when you press the "Bi-speed turn switch" and the front tire (inside of the turn) exceeds 35 degrees.
  Bi-speed turn makes the front tire speed 1.6 times faster than the standard 4WD front tire speed.
- "Bi-speed Turn" operates only when the travel speed is "H-3 (19th)" or lower and the tractor travel speed is 10 km/h (6.2 mph) or less at the start of the turn.
- If the "Bi-speed Turn" indicator is flashing, then Bi-speed Turn will not operate.

◆ **Bi-speed turn use is effective for the following jobs:**

1. Turning at the end of rows. (planting, cultivating, harrowing.)
2. Increasing maneuverability when working in tight spaces.

IMPORTANT :

- Tires will wear quickly if the front wheel drive is engaged on paved roads.

https://truckmanualshub.com/

◆ **Combination of the 4WD/Auto 4WD switch and Bi-speed turn switch**

With the use of the 4WD/Auto 4WD and Bi-speed turn switches, it is possible to choose between 5 different driving modes, as shown in the table below.
Select the optimal driving mode to fit the type of job being performed.
The switch can be used regardless of whether the clutch is in operation, the tractor has stopped or is being driven.
The meter panel indicator lights up depending of the driving mode.

4WD/Auto 4WD Switch / Bi-speed Turn Switch	[4WD]	[2WD]	[Auto 4WD]
"ON"	1 4WD + Bi-speed Turn	3 2WD	4 Auto 4WD + Bi-speed Turn
"OFF"	2 4WD		5 Auto 4WD

1AGBEAAAP085A

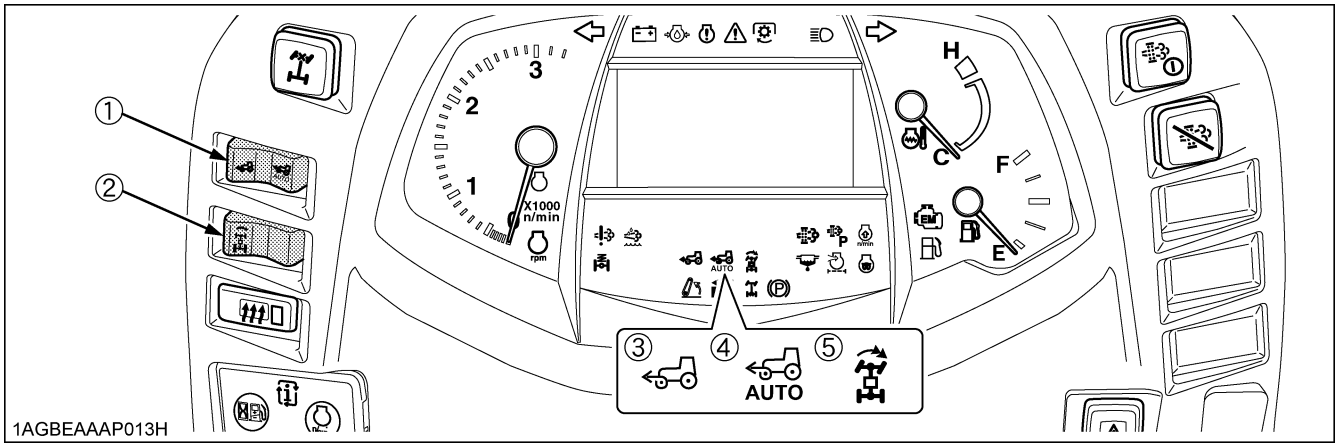

(1) 4WD/Auto 4WD switch
(2) Bi-speed turn switch
(3) 4WD indicator
(4) Auto 4WD indicator
(5) Bi-speed turn indicator

https://truckmanualshub.com/

7. Accelerate the Engine.

■Hand Throttle Lever

Pulling the throttle lever back decreases engine speed, and pushing it forward increases engine speed.

■Foot Throttle

Use the foot throttle when traveling on the road. Press down on it for higher speed. The foot throttle is interlocked with the hand throttle lever; when using the foot throttle, keep the hand throttle lever in low idling position.

■Rev-limiter Control Dial

This dial can be used to set the desired maximum engine speed. (See "Rev-limiter control setting" in "ELECTRONIC ENGINE CONTROL" in "OPERATING THE TRACTOR" section.)

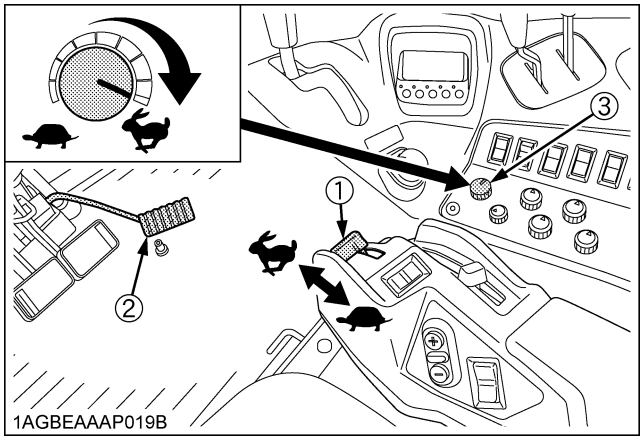

(1) Hand throttle lever
(2) Foot throttle
(3) Rev-limiter control dial
"INCREASE"
"DECREASE"

8. Unlock the Parking Brake and Slowly Release the Clutch.

■Parking Brake Lever

To release the parking brake, depress the brake pedal, push the release button and push the parking brake lever down.

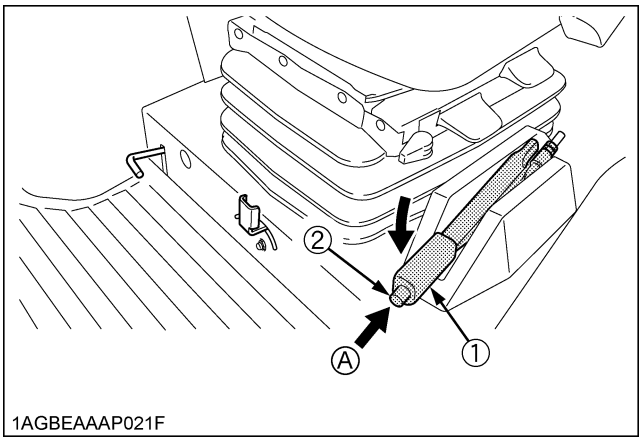

(1) Parking brake lever
(2) Release button
(A) "RELEASE"

NOTE :

- The parking brake warning indicator light on the Easy Checker(TM) will turn off when the parking brake is unlocked. If the tractor starts moving when the parking brake is engaged, the alarm buzzer sounds and the parking brake warning indicator flashes.

IMPORTANT :

- Do not attempt to put the tractor in motion before the parking brake indicator light turns off.
- If the tractor is operated with the parking brake set, the parking brake might be damaged.

STOPPING

■Stopping

1. Slow down the engine.
2. Step on the clutch and brake pedal.
3. After the tractor has stopped, disengage the PTO, lower the implement to the ground, shift the transmission to neutral, release the clutch pedal, and set the parking brake.

https://truckmanualshub.com/

CHECK DURING DRIVING

■Immediately Stop the Engine if:

- The engine suddenly slows down or accelerates,
- Unusual noises are suddenly heard,
- Exhaust fumes suddenly become very dark,

■Easy Checker(TM)

If the warning indicators in the Easy Checker(TM) come on during operation, immediately stop the engine, and find the cause as shown below.
Never operate the tractor while Easy Checker(TM) indicator is on.

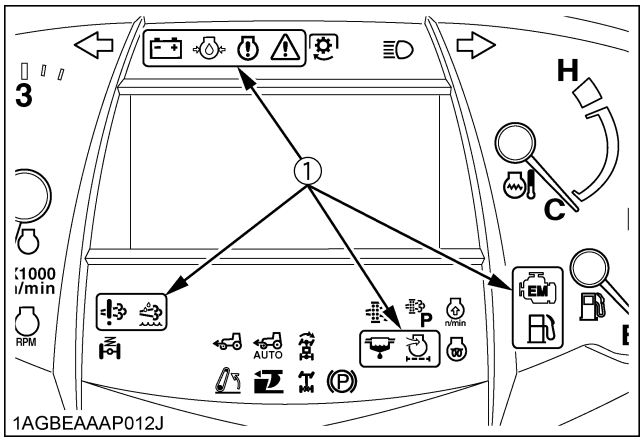

(1) Easy Checker(TM)

Engine warning
This indicator serves the following two functions. If the warning indicator lights up, pinpoint the cause and take a proper measure.

1. Error with the engine control system
   If during operation the water temperature gauge reads an acceptable level but the warning indicator in the Easy Checker(TM) comes on, stop the engine and get it restarted. If the error happens again, consult your local KUBOTA Dealer.

IMPORTANT :

- If the warning indicator lights up, the following phenomena may appear depending on the engine's trouble spot.
  - The engine stops unexpectedly.
  - The engine fails to start or gets interrupted just after start.
  - The engine output is not enough.
  - The engine output is enough, but the warning indicator stays on.

  If the engine output is not enough, immediately interrupt the operation and move the tractor to a safe place and stop the engine.

2. Engine overheat
   If the water temperature gauge reads an unusual level and the warning indicator in the Easy Checker(TM) comes on, the engine may have got overheated. Check the tractor by referring to "TROUBLESHOOTING" section.

Engine oil pressure
If the oil pressure in the engine goes below the prescribed level, the warning indicator in the Easy Checker(TM) will light up.
If this should happen during operation, and it does not go off when the engine is accelerated to more than 1000 rpm, check level of engine oil.
(See "Checking Engine Oil Level" in "DAILY CHECK" in "PERIODIC SERVICE" section.)

DEF/AdBlue® system warning
If trouble should occur at the DEF/AdBlue® system, the warning indicator in the Easy Checker(TM) will light up.
If this should happen during operation, check the DEF/AdBlue® system or consult your local KUBOTA Dealer.

Fuel level
If the fuel in the tank goes below the prescribed level, the warning lamp in the Easy Checker(TM) will come on. (less than 35 L (9.2 gals.))
If this should happen during operation, refuel as soon as possible.
(See "Checking and Refueling" in "DAILY CHECK" in "PERIODIC SERVICE" section.)

IMPORTANT :

- When the fuel indicator lights up, refuel the tank as soon as possible. If the tractor runs out of fuel and stalls, the engine and its components may be damaged.

Water separator
If water or impurities collect in the water separator, the indicator in the Easy Checker(TM) will light up.
If this should happen during operation, drain the water from the water separator as soon as possible.
(See "Checking Water Separator" in "DAILY CHECK" in "PERIODIC SERVICE" section.)

DEF/AdBlue® level
If the DEF/AdBlue® in the tank goes below the prescribed level, or if a poor-quality product is added, the indicator in the Easy Checker(TM) will right up.
If this should happen during operation, refill or replace with DEF/AdBlue® as soon as possible.
(See "Selective Catalytic Reduction (SCR) MUFFLER" in "OPERATING THE ENGINE" section.)

https://truckmanualshub.com/

Air cleaner

If the air cleaner is clogged, the warning lamp in the Easy Checker(TM) will come on.
If this should happen during operation, clean the air cleaner element.
(See "Cleaning Air Cleaner Primary Element" in "EVERY 100 HOURS" in "PERIODIC SERVICE" section.)

Emission indicator

If this indicator lights up, take the steps to lower the water temperature. This helps keep the emission clean.

Electrical charge

If the alternator is not charging the battery, the Easy Checker(TM) will come on.
If this should happen during operation, check the electrical charging system or consult your local KUBOTA Dealer.

Master system warning

If trouble should occur at the engine, transmission, hydraulic or other control parts, the indicator flashes as a warning. If the trouble is not corrected by restarting the tractor, consult your local KUBOTA Dealer.

NOTE :

- For checking and servicing of your tractor, consult your local KUBOTA Dealer for instructions.

■Fuel Gauge

A needle indicates the amount of fuel left regardless of the key position.
Be careful not to empty the fuel tank. Otherwise air may enter the fuel system.
Should this happen, the system should be bled. (See "Bleeding Fuel System" in "SERVICE AS REQUIRED" in "PERIODIC SERVICE" section.)

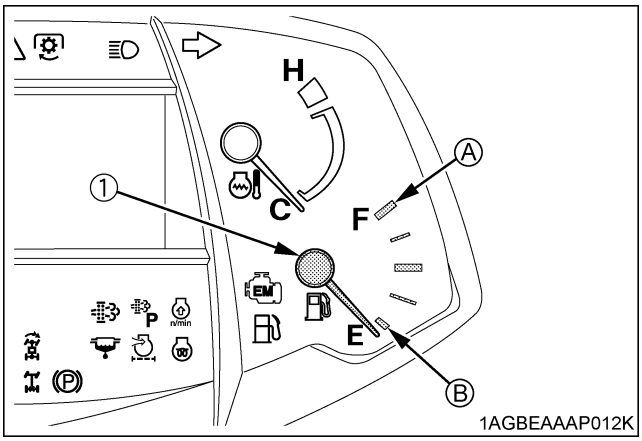

(1) Fuel gauge
(A) "FULL"
(B) "EMPTY"

■DEF / AdBlue® Gauge

The DEF/AdBlue® level in the DEF/AdBlue® tank is indicated with LCD blocks.
If DEF/AdBlue® level drops too low, the engine output is restricted. With this in mind, be careful not to empty the tank.
When the fluid level in the tank has dropped below 15%, the DEF/AdBlue® warning indicator on the instrument panel lights up and stays on.
Immediately add DEF/AdBlue® to the specified level.

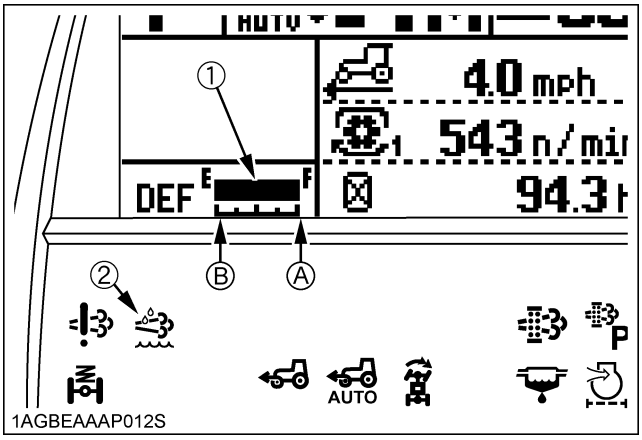

(1) DEF/AdBlue® gauge
(2) DEF/AdBlue® warning indicator
(A) "FULL"
(B) "EMPTY"

https://truckmanualshub.com/

■Coolant Temperature Gauge

WARNING

To avoid personal injury or death:

- **Do not remove radiator cap until coolant temperature is well below its boiling point. Then loosen cap slightly to the stop to relieve any pressure before removing cap completely.**

1. With the key switch at "ON", this gauge indicates the temperature of the coolant. "C" for "cold" and "H" for "hot."
2. If the indicator reaches the red zone position, engine coolant is overheated. Check the tractor by referring to "TROUBLESHOOTING" section.

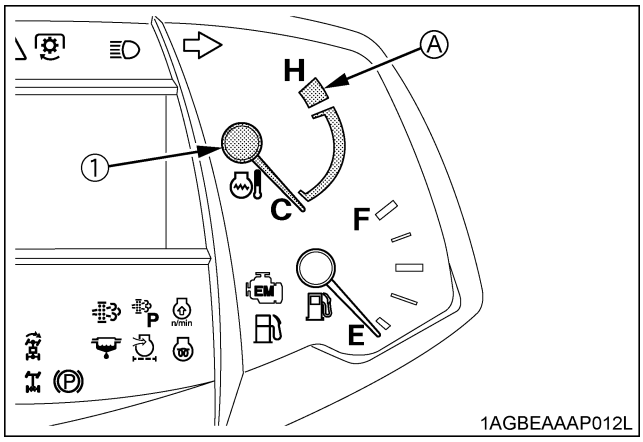

(1) Coolant temperature gauge *(A) "RED ZONE"*

■Tachometer

The tachometer indicates the engine speed on the dial.

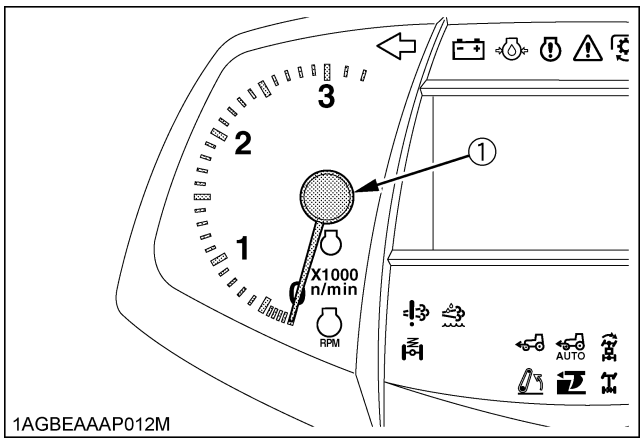

(1) Engine revolution

https://truckmanualshub.com/

LCD MONITOR

This display provides the operator with a variety of information necessary to operate the tractor. Further, part of the display can be modified by the operator as required.

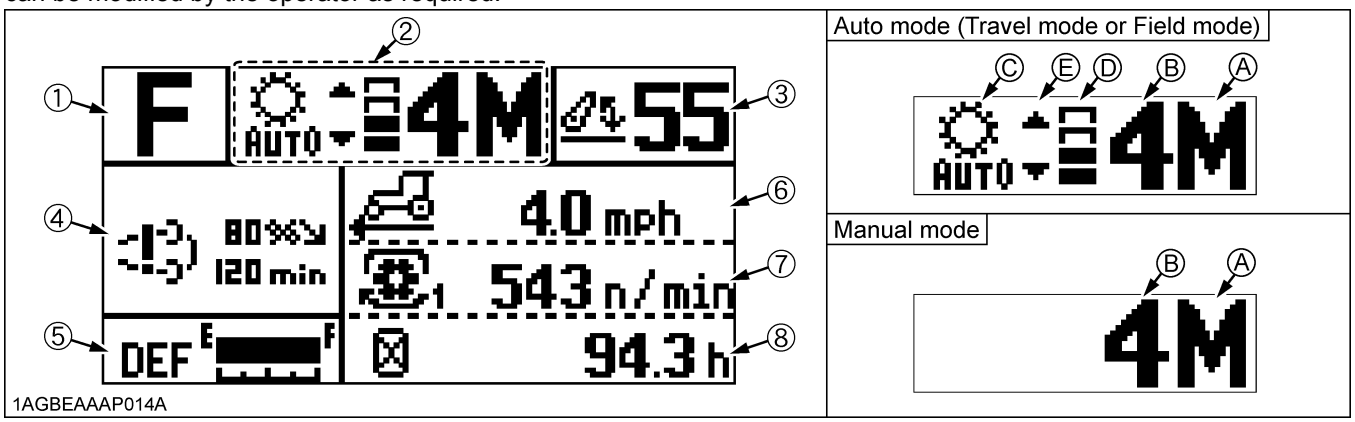

No.	Description	Ref. page
(1)	**Displays "F", "R" or "N"** "F" is displayed when forward operation is selected with the shuttle lever. "R" is displayed when reverse operation is selected with the shuttle lever. "N" is displayed when the lever is in the neutral position.	44
(2)	**(A) Displays "H", "M", "L" or "N"** Displays the position of the range gear shift that was selected with the Power shift/Range shift lever.	42
	(B) Displays 1, 2, 3, 4, 5, 6, 7 or 8 Displays the position of the Power shift ratios that was selected with the Power shift/Range shift lever.	42
	(C) Auto mode indicator Lights up when the Auto mode is selected. Stays off while in the manual mode.	65
	(D) Auto-shift bar display Displays the automatic shift-down possible speed range (factory setting: 2 shifts) that was preset to the highest position of the set speed with the Power shift/Range shift lever in the Auto mode, as well as the current gear ratio. Lights up when the Auto mode is selected. Stays off while in the manual mode.	66
	(E) Shift-up/Shift-down indicator While in the Auto mode, the shift-up indicator flashes before shift-up occurs, and the shift-down indicator flashes before shift-down occurs. Stays off while in the manual mode.	66
(3)	**3 point hitch position**	---

No.	Description		Ref. page
(4)		DEF/AdBlue® low level icon indicator	22
		DEF/AdBlue® poor quality icon indicator	
		DEF/AdBlue® freeze icon indicator	
		SCR system trouble	
		Low temperature regulation indicator	32
(5)	**DEF/AdBlue® gauge** Displays the fluid level in the DEF/AdBlue® tank.		51
(6)	**Travel speed**		---
(7)	**PTO speed**		54
(8)	**Performance monitor** 5 information can be selected by the operator. 1. Elapsed time (hour meter) 2. Trip time 3. Engine RPM dual memory A/B 4. Rev- limiter control setting speed 5. A trouble-spot-pinpointing error code and the related control unit or DPF parked regeneration remaining time.		 54 54 59 59 162

https://truckmanualshub.com/

■Performance Monitor

◆ Display change

When the RPM dual memory setting is "OFF" and the Rev-limiter control setting is " ", the instrument panel LCD changes "Hour meter mode", "Trip meter mode", "Engine RPM dual memory A", "Engine RPM dual memory B" each time the display switch is pressed. Select the appropriate display for the work being performed. If the "RPM dual memory setting" or "Rev-limiter control setting" is engaged, the set speed takes priority on the display.

Each time PTO indicator switch is pressed, the PTO rpm "shift 1" and "shift 2" are displayed alternately.

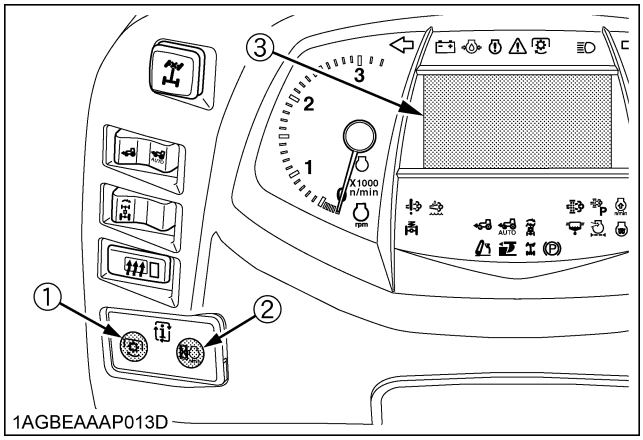

(1) PTO indicator switch
(2) Display switch (Hour, Trip, Engine RPM dual memory A/B)
(3) LCD monitor

◆ Hour meter mode

The tractor's total operating hours are displayed.

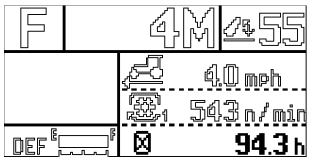

1AGBEAAAP014D

◆ Trip meter mode

The total operating hours counted from the previous resetting is displayed.

Hold down the display switch for 2 seconds or longer to reset the trip meter to [0. 0].

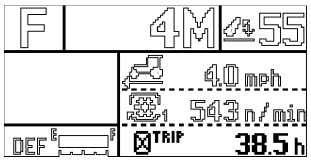

1AGBEAAAP014E

◆ PTO rpm indicator

Each time PTO indicator switch is pressed, the PTO rpm "shift 1" and "shift 2" displayed alternately.

"shift 1" is used to select 540 rpm.

"shift 2" is used to select 1000 rpm.

The figure shown below is an example of the display when the PTO rpm "shift 2" is displayed.

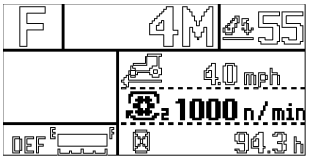

1AGBEAAAP014P

◆ Priority display (Engine RPM dual memory A/B, Rev-limiter control setting)

If the "RPM dual memory setting" or "Rev-limiter control setting" is engaged, the set speed takes priority on the display. The figure shown below is an example of the display when the engine speed has been set for the switch A side.

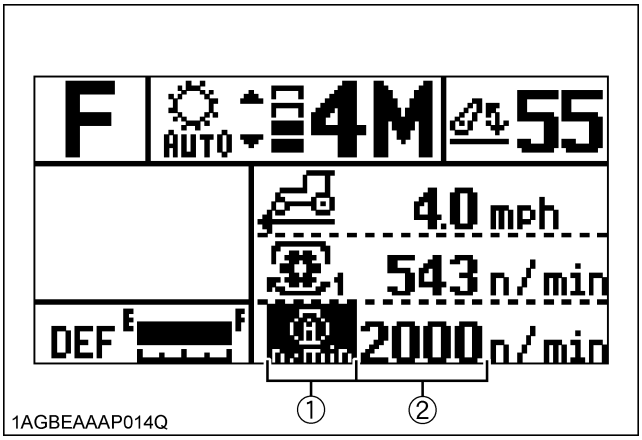

(1) Switch A
(2) Set engine speed

https://truckmanualshub.com/

SIDE DIGITAL DISPLAY

This display shows the following information.

1. 4 rows with 30 types of tractor information, such as travel speed, PTO rpm and mileage can be selected by the operator.
2. Operating history for the past 4 months can be displayed.

This chapter covers "How to view and select" the 4 rows of information.

For the meanings and selection procedures of other data, as well as changing the display settings, refer to the "SIDE DIGITAL DISPLAY" appendices at the back of this manual.

■Initial Setting

Before use, make sure the tire circumference installed, the clock and the working range of implement are set.

Otherwise, the travel speed, work area, work distance and other data will not be correctly displayed.

◆ Setting procedure

1. Turn on the key switch. With the following data on the screen, hold down the mode selector switch. Various screens can be selected.
2. Select the tire circumference setting mode with Switch 3 and press Switch 4 to go to the tire circumference setting screen.
3. Check to see if the tire circumference is correctly preset. If not, correct the numerical settings with Switches 1, 2 and 3, referring to the table below. Press Switch 4 to save the new setting.

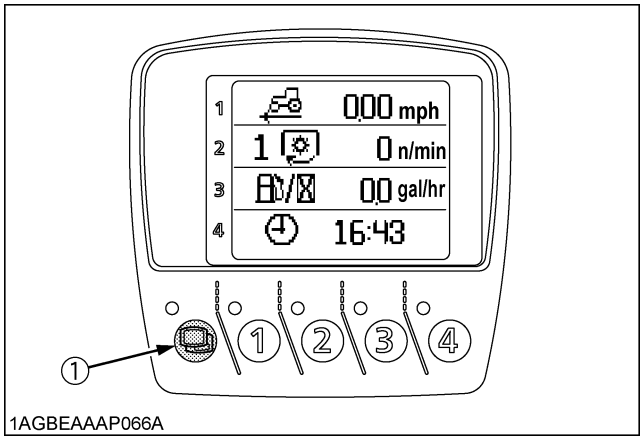

1AGBEAAAP066A

(1) Mode selector switch

4. Select the tire circumference setting mode with Switch 3 and press Switch 4 to go to the tire circumference setting screen.

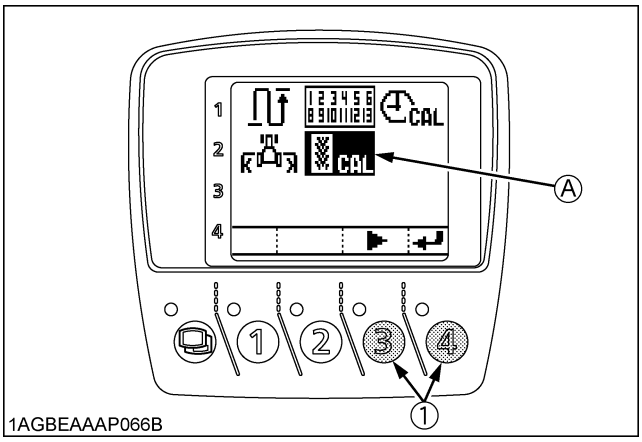

1AGBEAAAP066B

(1) Switch *(A) "Tire circumference setting mode"*

5. Check to see if the tire circumference is correctly preset. If not, correct the numerical settings with Switches 1, 2 and 3, referring to the table below. Press Switch 4 to save the new setting.

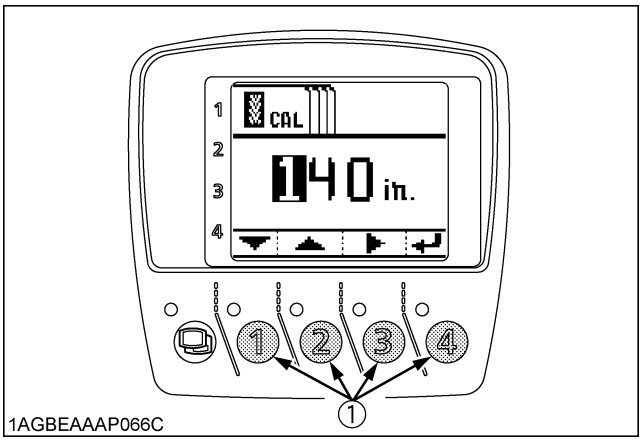

1AGBEAAAP066C

(1) Switch

◆ Tire circumference chart

Tractor type	Tire specification	Rear tire size	Entry (in.)
M6-101	Standard	18.4R30	193
		18.4-30	193
		16.9-34	197
		18.4R34	206
		18.4-34	206
M6-111	Standard	18.4R34	206
		18.4-34	206
		16.9-34	197
M6-131 M6-141	Standard	18.4R38	204
		16.9-38	198
		520/70R38	205

https://truckmanualshub.com/

6. Go back to any of various setting mode screen. Select the clock setting mode with Switch 3. Press Switch 4, and the clock setting screen appears.

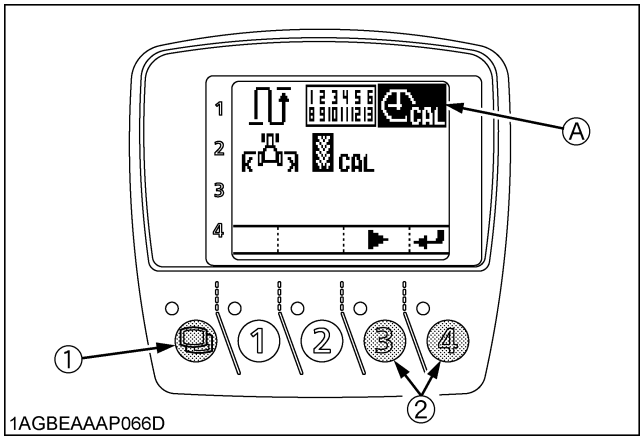

(1) Mode selector switch *(A) "Clock setting mode"*
(2) Switch

7. Check to see if the clock is correctly set. If not, set the correct date and time with Switches 1, 2 and 3. Select “Set” and press Switch 4 to save the new setting.

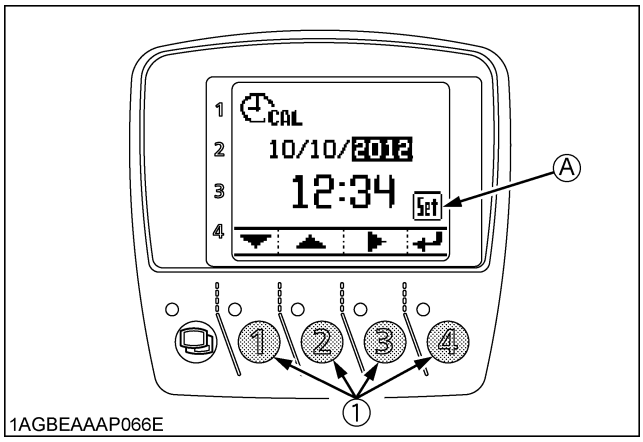

(1) Switch *(A) "SET"*

8. Go back to any of various setting mode screen. Select the working range of implement setting mode with Switch 3. Press Switch 4, and the working range of implement setting screen appears.

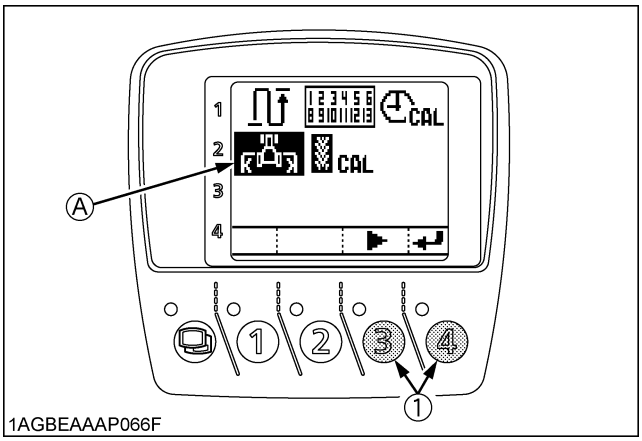

(1) Switch *(A) "Working range of implement setting mode"*

9. Using Switches 1, 2 and 3, enter the working range of implement. Press Switch 4 to save the setting.

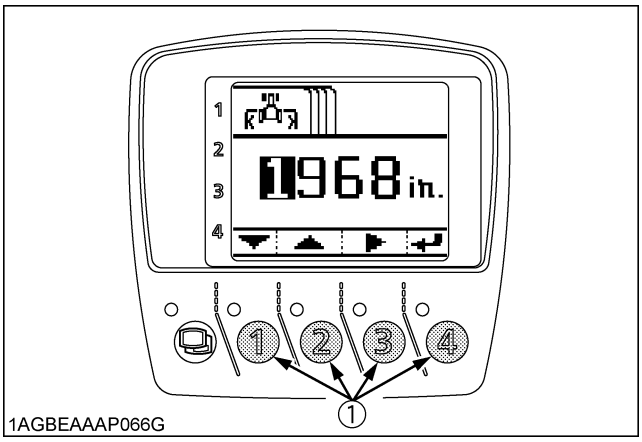

(1) Switch

https://truckmanualshub.com/

■Factory-set Screen Display

◆ Display when the key switch is turned on and off

Turn on the key switch, and the current time is displayed. In a couple of seconds, the Default screen appears.
Turn off the key switch, the "fuel consumption" and "operating hours" appear for a few seconds after the engine is started.

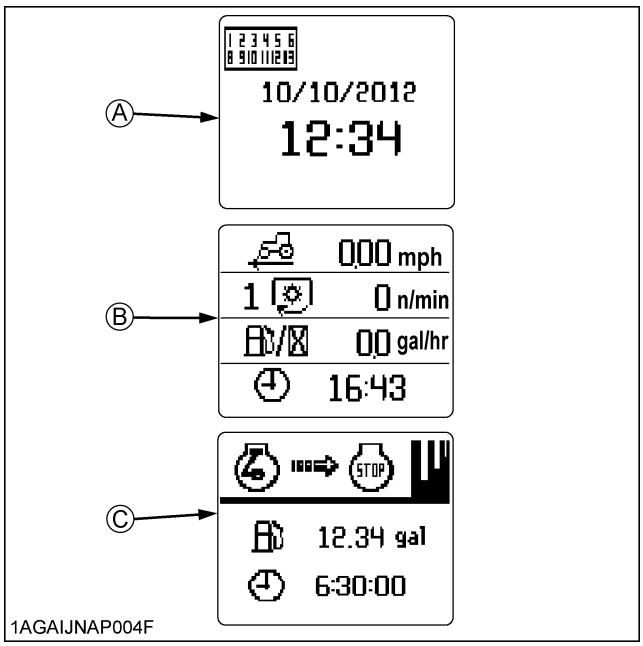

(A) "Current time"
(B) "Default screen"
(C) "With key switch turned off"

NOTE :

- The "current time" appears when the work history is on. For setting the display, refer to the "SIDE DIGITAL DISPLAY" appendices at the back of this manual.

◆ Display Operating Procedures

The display has been factory-set for the following 4 settings. They are interlocked from top to bottom with Switches 1 thru 4. For viewing and modifying the information, see the chart on the next page.

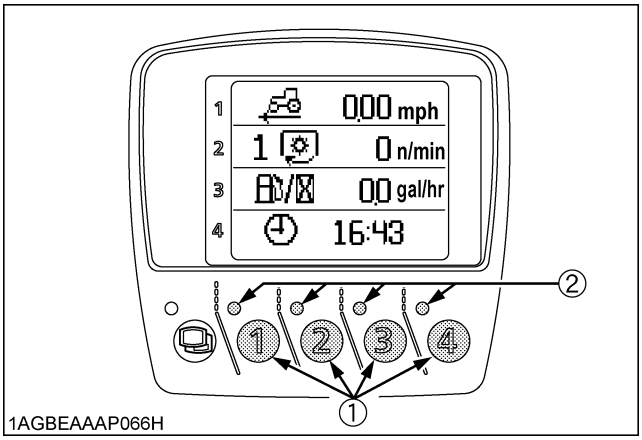

(1) Switch
(2) Indicator

Indicator

ON	Press the switch to change the display.
OFF	The display does not change even by pressing the switch.
FLASHING	The data are reset by holding down the switch.

https://truckmanualshub.com/

◆ **Standard factory settings and display changes**

Info	Display	Remarks	Ref. page
Travel speed	Travel speed 0.00 mph	● Each time Switch 1 is pressed, the "travel speed" and "average travel speed" are displayed alternately. ● The "average travel speed" is based on the speed since the last reset action was performed. ● With the "average travel speed" displayed, hold down Switch 1. The setting goes back to "0.0". **NOTE :** ● The travel speed displayed does not account for wheel slip.	42
	Average travel speed Av. 0.00 mph		42
PTO	PTO rpm (Shift 1) 1 540 r/min	● Each time Switch 2 on this side display or PTO indicator switch on left side of instrument panel is pressed, the "shift 1" and "shift 2" are displayed alternately. ● "1" is used to select 540 rpm. "2" is used to select 1000 rpm.	78
	PTO rpm (Shift 2) 2 1000 r/min		78
Mileage	Instantaneous fuel consumption 3.9 gal/hr	● Each time Switch 3 is pressed, the "instantaneous fuel consumption", "average fuel consumption" and "mileage graph" are displayed alternately. ● The "instantaneous fuel consumption" is measured per hour. ● The "average fuel consumption" is measured per hour from the previous resetting. ● With the "average fuel consumption" displayed, hold down Switch 3. The setting goes back to "0.0". ● The "mileage graph" graphically shows the mileage in real time. (The more the bar is extended to the right, the worse the mileage becomes.)	-
	Average fuel consumption Av. 2.6 gal/hr		-
	Mileage graph		-
Clock	Time 15:14	● Each time Switch 4 is pressed, the "time" and "date" are displayed alternately. ● With the "time" displayed, hold down Switch 4. The 24-hour system and 12-hour system are displayed alternately.	55
	Date 7/ 4/2012		173

● For other data than the factory settings and modifying the data displayed, refer to the "SIDE DIGITAL DISPLAY" appendices at the back of this manual.

https://truckmanualshub.com/

ELECTRONIC ENGINE CONTROL

The electronically controlled engine which is installed in this tractor performs the following 3 types of control.

1. Rev-limiter control setting
2. RPM dual memory setting
3. Constant RPM management control

■Rev-limiter Control Setting

When the Rev-limiter control dial is used to restrict the maximum engine speed, the engine speed will not exceed the set speed even when the hand throttle lever or foot throttle is operated. This can prevent machine trouble caused by incorrect operation.

◆ Setting the speed

1. The setting can be made both when the engine is running and when it is stopped.
2. Set the speed by turning the dial to the left or right while watching the engine speed that is displayed on the LCD.
3. When the dial is turned all the way to the right, to the " " position, the restriction is canceled.

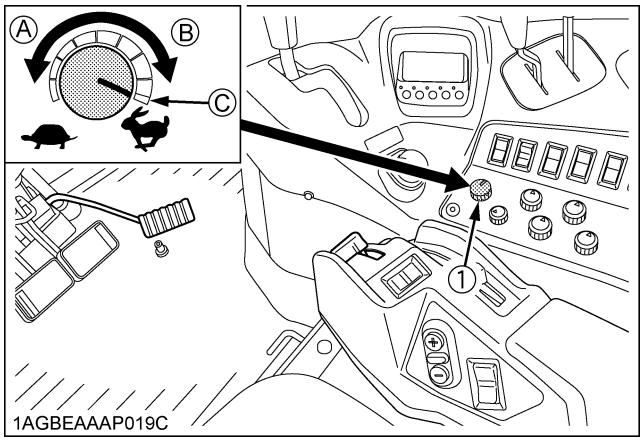

(1) Rev-limiter control dial

(A) "LOW-SPEED SIDE"
(B) "HIGH-SPEED SIDE"
(C) "CANCELED"

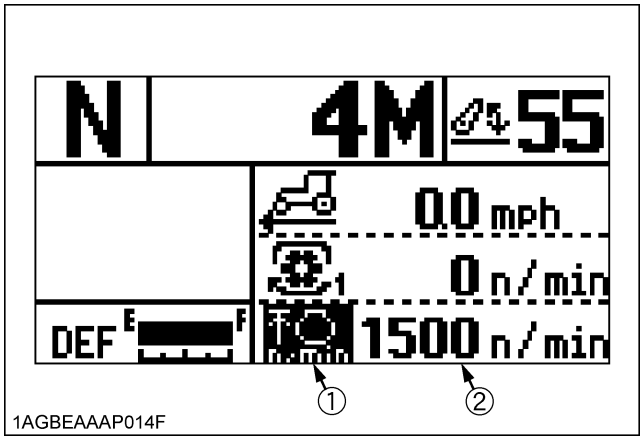

(1) Display when Rev-limiter control is set
(2) Maximum engine speed that is set

■RPM Dual Memory Setting

Two different engine speeds can each be set with a single touch by pressing the RPM dual memory switch to the (A) or (B) side. This can be used to eliminate troublesome acceleration operations.

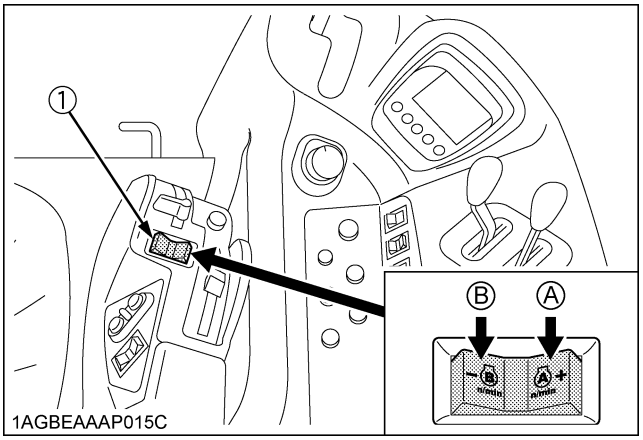

(1) RPM dual memory switch

(A) Switch A
(B) Switch B

◆ Example of use

Consider an example in which an engine speed of 2000 rpm is set for the switch (A) side and a speed of 1000 rpm is set for the switch (B) side.

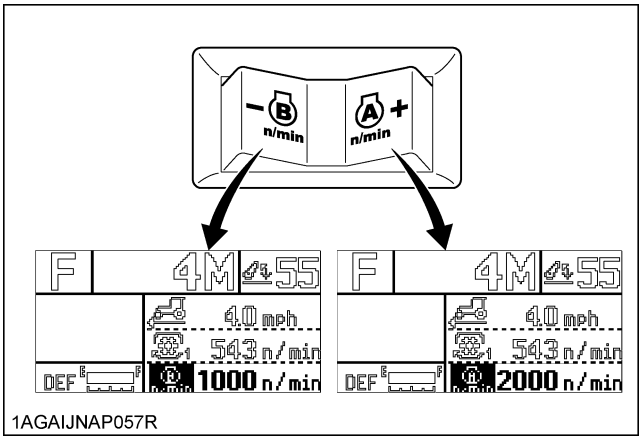

https://truckmanualshub.com/

Work ⇩	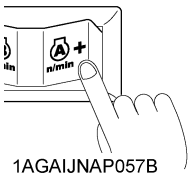 1AGAIJNAP057B	During work, simply press the switch to the (A) side to automatically set an engine speed of 2000 rpm.
Turning ⇩	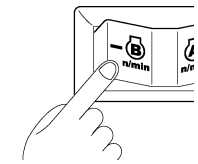 1AGAIJNAP057C	When turning, press the switch to the (B) side to lower the speed to 1000 rpm, allowing turning at low speed.
Work	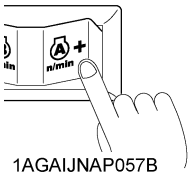 1AGAIJNAP057B	After turning, press the switch again to the (A) side to resume a speed of 2000 rpm.

- Keep the hand throttle lever above the minimum speed. At the minimum speed, a memory setup can not be performed.
- You can also depress the foot throttle to increase the engine speed above the set speed.

◆ **Setting the speeds (or changing the speed settings)**

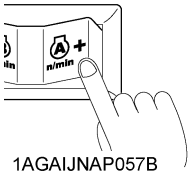
1AGAIJNAP057B

Setting RPM dual memory switch (A)

1. Turn the key switch to "ON". (The speed setting can be made both when the engine is running or stopped.)

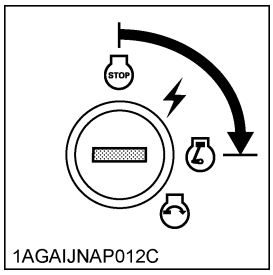

1AGAIJNAP012C

2. Set the hand throttle lever slightly toward the higher-speed side.

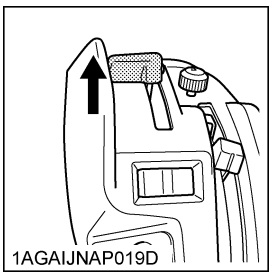
1AGAIJNAP019D

3. Turn the Rev-limiter control dial to the " " position.

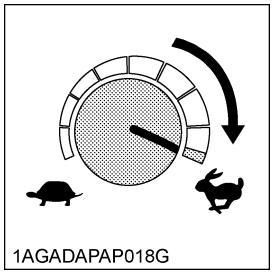
1AGADAPAP018G

4. Press the switch (A) side and then release the switch.

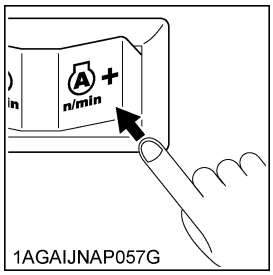
1AGAIJNAP057G

5. Again press and hold down the switch (A) side (2.5 seconds) until the buzzer sounds, then release the switch.

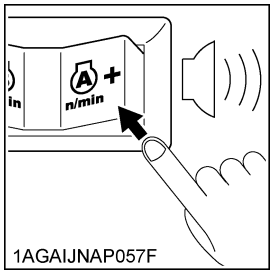
1AGAIJNAP057F

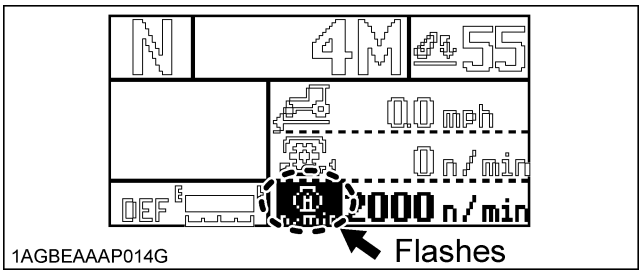

1AGBEAAAP014G

6. Press the switch to the (A) or (B) side and set the speed.
   Pressing and holding down the switch will cause the speed to change continuously. Pressing and releasing the switch changes the speed by 10 rpm each time. Set the desired engine speed while watching the speed display.

https://truckmanualshub.com/

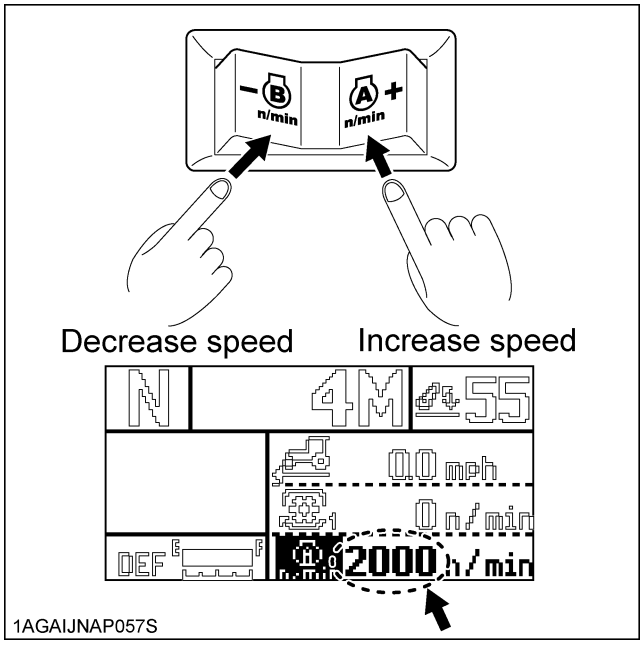

1AGAIJNAP057S

7. If the switch is released and not operated for 4 seconds, a continuous buzzer sound occurs and the setting is completed.

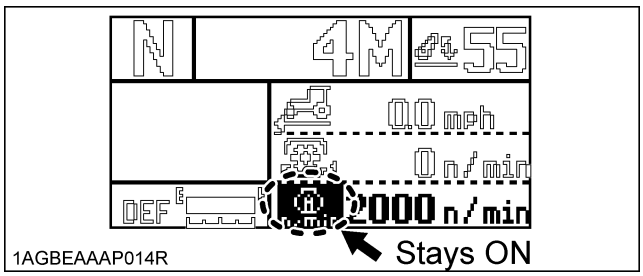

1AGBEAAAP014R

8. Follow the same procedure as for the (A) side to set the speed for the switch (B) side.

NOTE :
- The set speeds will be stored even after the engine is stopped.

◆ **Canceling the setting**

Any of the actions below will cancel the RPM dual memory settings.

1. **[Switch (A) side]**
   When the memory speed is engaged, press the switch (A) again to cancel.
   [Switch (B) side]
   When the memory speed is engaged, press the switch (B) again to cancel.
   When the memory speed is canceled, the speed will return to the speed that is determined by the hand throttle lever (foot throttle).
   (When the switch is pressed, the LCD will display the engine speed that is in effect after memory speed is canceled.)
2. Return the hand throttle lever to the lowest speed position.
3. Turn the key switch to "OFF".

◆ **Checking the speeds set in the memory**

You can check the speed which is set for switch (A) and (B) on the LCD by pressing the display switch each time. (The display automatically disappears after 1.5 seconds.)

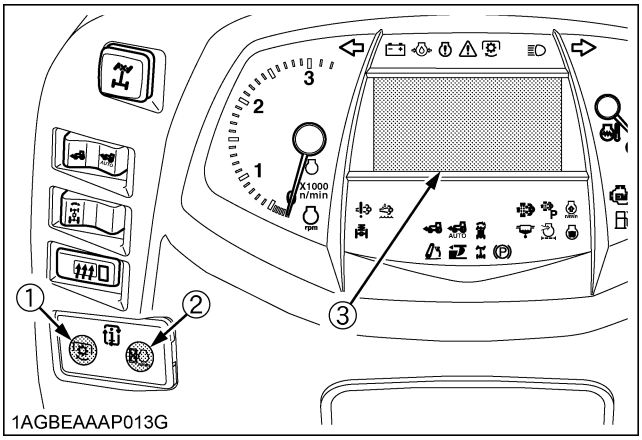

1AGBEAAAP013G

(1) PTO indicator switch
(2) Display switch (Hour, Trip, Engine RPM dual memory A/B)
(3) LCD monitor

NOTE :
- If the memory speed setting is set higher than the value that was set with the Rev-limiter control dial, the mark (1) shown in the figure below will appear on the LCD, the corresponding number will flash, and the speed will not increase to the set speed. (The Rev-limiter control dial takes priority.)
- For example if the speed set in the memory is 2000 rpm, and the Rev-limiter control dial is set to 1230 rpm, then mark (1) shown in the figure below will appear on the LCD, the corresponding number will flash, and the engine speed will not increase above 1230 rpm.

https://truckmanualshub.com/

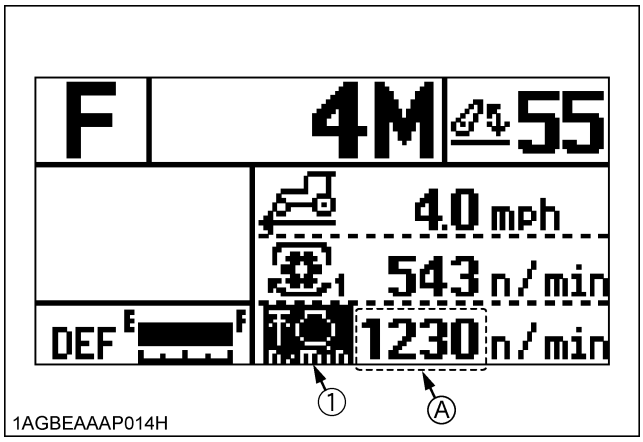

(1) Mark *(A) Flashing*

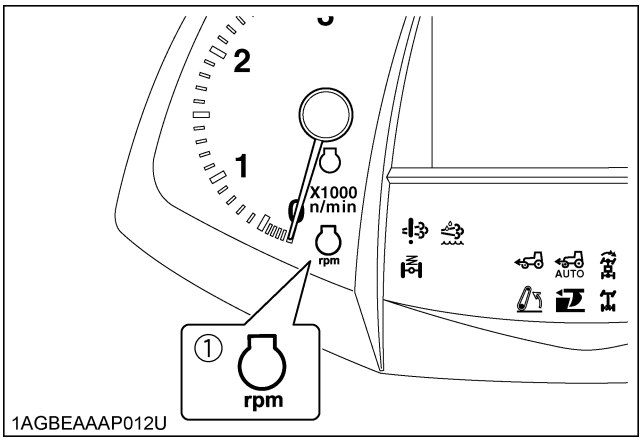

(1) Constant RPM management indicator

■Constant RPM Management Control

Constant RPM Management can be turned "ON" or "OFF" by operating the switch. Pressing the switch to the lower side turns the control "ON" and pressing the switch to the upper side turns it "OFF".

◆ When constant RPM management is "ON"

Fluctuations in the engine speed due to load fluctuations are reduced and the travel speed and PTO speed are kept nearly constant, allowing stable work. When constant RPM management is "ON", the switch and the instrument panel indicator light up.

◆ When constant RPM management is "OFF

As in a conventional engine, the engine speed increases or decreases according to changes in the load. The operator judges the size of the load from the engine speed and engine sound, and can adjust the travel speed or plowing depth to prevent overload on the tractor.

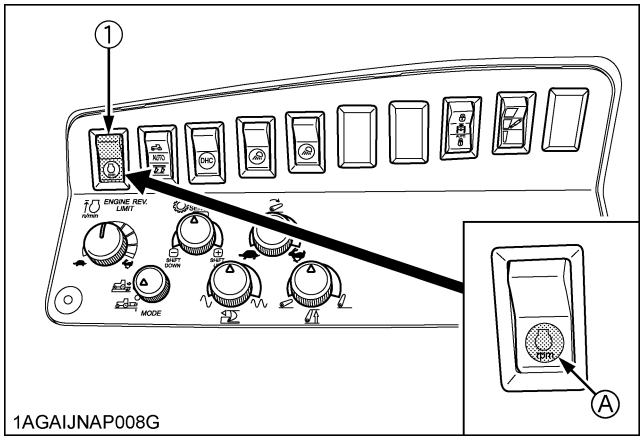

(1) Constant RPM management switch *(A) "PRESS (ON)"*

NOTE :

- In a mechanically-controlled engine, the engine speed changes according to increases and decreases in the load.
  For example, when working in a hilly area, the load increases and engine speed drops while ascending a slope, and conversely the load drops when descending. These changes in engine speed affect the travel speed and PTO-driven implements. In order to minimize these effects, the operator must make fine adjustments to the travel speed and hand throttle lever.
  When the constant RPM management switch in this tractor with its electronically controlled engine is turned "ON", the engine speed will be kept nearly constant in response to a certain level of load fluctuations. This improves the accuracy of work without the need for troublesome manipulation of the travel speed and hand throttle lever.
- It is recommended that a combination of light-load PTO-driven implements and AUTO-MODE (Automatic speed change) be used.
- There is a limit to the range within which a constant speed can be maintained. If a load exceeding the engine performance is applied, the engine speed will drop.
- The purpose of constant RPM management is not to increase the engine power.

https://truckmanualshub.com/

AUTO MODE

■Outline

The Auto-Mode is an automatic speed change function that is designed to shift up and down the travel speed in response to the load-dependent engine rpm fluctuations, attachment maneuvering, acceleration pedal movement and other factors. The Auto-Mode comes in 2 ways, "Travel mode" and "Field mode", according to the applications.

◆ Travel mode

In trailing operation, the automatic shift-up/down is carried out within a predetermined range (factory-set for 2 shifts), responding to the acceleration pedal movement and rpm changes from load. This helps you avoid troublesome gear shifting.

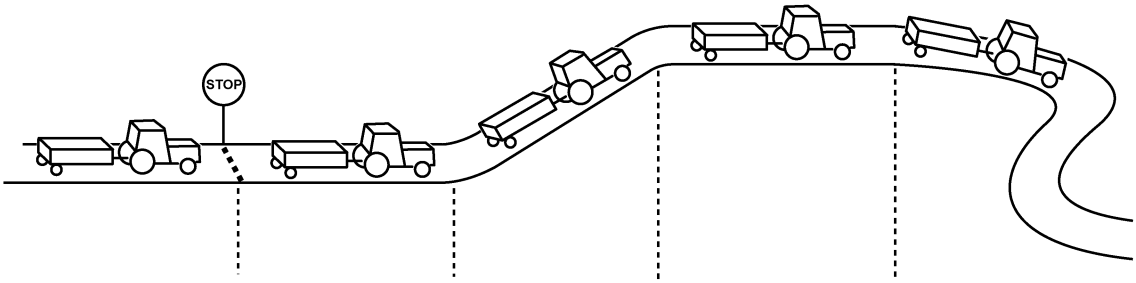

[Example]

Running at the automatic travel speeds (6), (7) and (8)

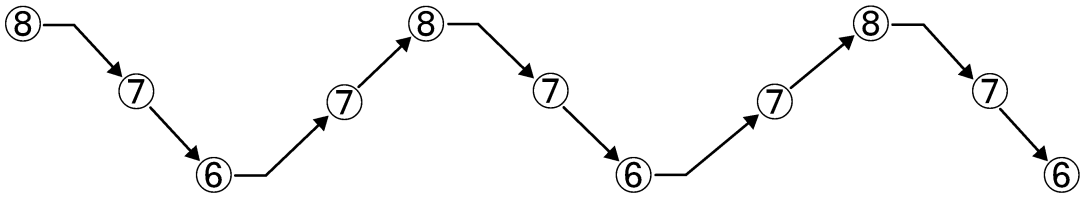

Acceleration pedal released	Tractor stopped	Uphill travel	Traveling	Deceleration under load
When the acceleration pedal is completely released and the hand throttle is in the idle position, the automatic shift-down from speed (8) to (7) to (6) occurs.	When the tractor stops, the automatic shift-up from speed (6) occurs for smooth restarting.	On an uphill slope, an increase in load is sensed, prompting the automatic shift-down to speed (7) or (6) for more traction force.	Over the uphill slope, a decrease in load is sensed, prompting the automatic shift-up.	On a downhill slope or along a curve, the automatic shift-down to speed (7) or (6) occurs, responding to the acceleration pedal movement.

1AGAICVAP032A

NOTE :

- The tractor has been factory-set for the automatic range (2 shifts) discussed above. This gearshift range can be modified to meet your applications. (For details, refer to "Changing the Auto-Mode settings" in this section.)
- The Auto-Mode does not function if the clutch is disengaged or halfway or in turning over the Bi-speed turning angle and if shuttle lever is in reverse position.
- The Auto-Mode functions when the engine rpm is above the middle speed.

https://truckmanualshub.com/

◆ **Field mode**

In plowing operation, the automatic shift-up/down is carried out within a predetermined range (factory-set for 2 shifts), responding to the field condition, soil condition and other factors. When lifting the attachment using 3 pt, the automatic shift-down is made for easier turning.

With implement that require PTO rotation, automatic shift-up/shift-down occurs repeatedly. This is because the system is sensitive to the load from the plow or other towed implements. As a result, the PTO speed is kept nearly constant, improving the accuracy of work.

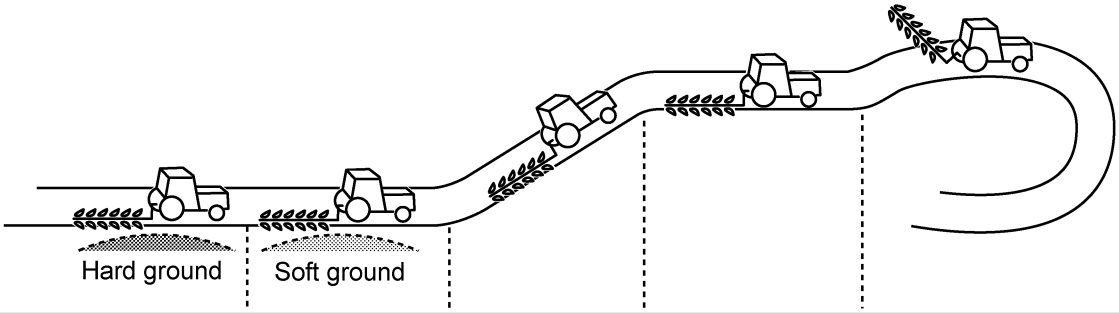

[Example]

Running at the automatic travel speeds (6), (7) and (8)

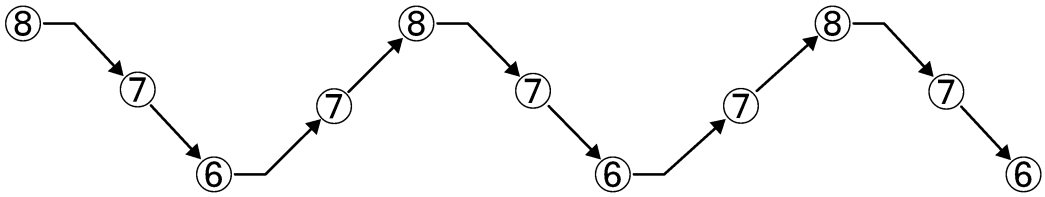

Hard farm ground	Soft farm ground	Uphill plowing	Flat farm ground	Attachment lifted
An increase in load is sensed due to a soil change, prompting the automatic shift-down from speed (8) to (7) to (6).	A decrease in load is sensed due to a soil change, prompting the automatic shift-up.	On an uphill slope, an increase in load is sensed, prompting the automatic shift-down to speed (7) or (6) for more traction force.	Over the uphill slope, a decrease in load is sensed, prompting the automatic shift-up.	When lifting the attachment with the 3-P.Quick raise/lower switch or the hydraulic control lever, the automatic shift-down occurs for easier turning.

1AGAICVAP033A

NOTE :

- The tractor has been factory-set for the automatic range (2 shifts) discussed above. This gearshift range can be modified to meet your applications. (For details, refer to "Changing the Auto-Mode settings" in this section.)
- The Auto-Mode does not function if the clutch is disengaged or halfway or in turning (over the bi-speed turning angle) and if shuttle lever is in reverse position.
- The Auto-Mode functions when the engine rpm is above the middle speed.

https://truckmanualshub.com/

■Operation

1. Press the Auto-Mode switch to select "Travel mode" or "Field mode" according to your applications. Once selected, the Auto-Mode indicator on the meter panel lights up.
   When the switch is moved to the middle position "OFF", the mode indicator goes out.

Travel mode:	For pulling trailers and other hauling operations.
Field mode:	For plowing, subsoiling and other tilling operations, or for harvesters and other PTO-driven implements.

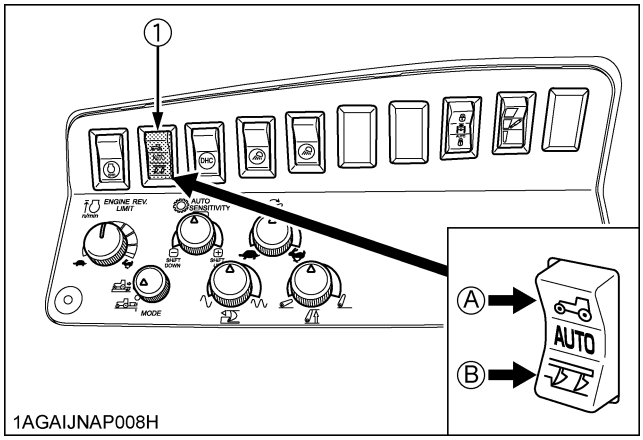

(1) Auto-Mode switch
(A) "Travel mode"
(B) "Field mode"

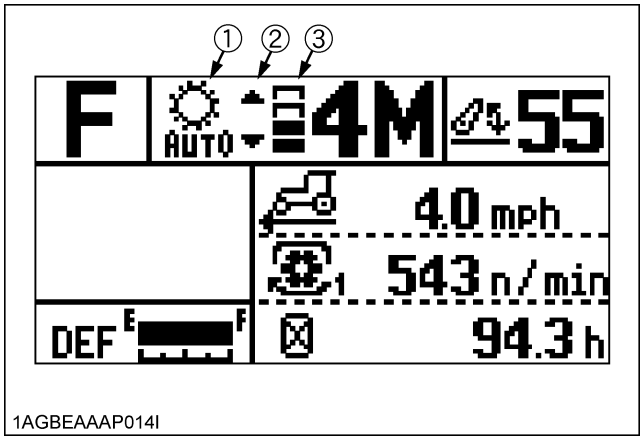

(1) Auto-Mode indicator
(2) Shift-up/shift-down indicator
(3) Auto-shift bar indicator

2. Use the up-shift/down-shift button on the power shift / range shift lever or on the armrest to select a field speed.
   The selected speed can be checked in the selected-speed display of the meter panel.

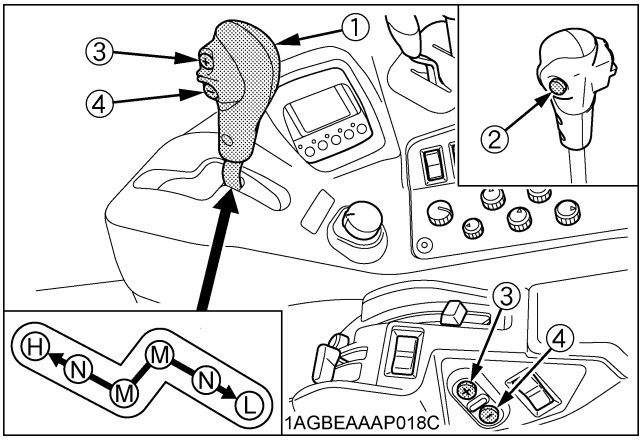

(1) Power shift / Range shift lever
(2) Clutch button
(3) Up-shift button (+)
(4) Down-shift button (-)

3. Now the setting is completed.

https://truckmanualshub.com/

■Work Speed Display

The LCD displays both the selected speed and Auto-shift bars.

◆ Selected speed display

The Auto-shift range is set to 2 shifts as standard. If "8" is displayed at start, then the tractor starts in 8th speed and then automatic shift-up/shift-down occurs in the range of "8", "7", and "6". The selected speed display remains lit when driving in 8th speed, and flashes when driving in 7th or 6th.

◆ Auto-shift bar display

The auto shift bars display the set "automatic shift-down possible speed range" and the "current speed stage". The shift-up indicator flashes immediately before shift-up occurs, and the shift-down indicator flashes immediately before shift-down occurs.

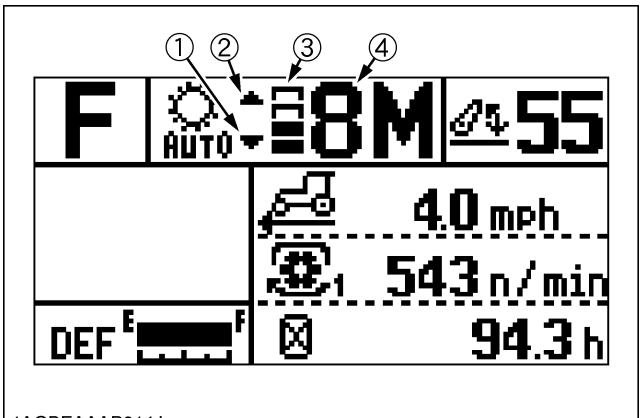

1AGBEAAAP014J

(1) Shift-down indicator
(2) Shift-up indicator
(3) Auto-shift bar display
(4) Selected speed ("1" to "8")

◆ Example of Auto-shift bar display

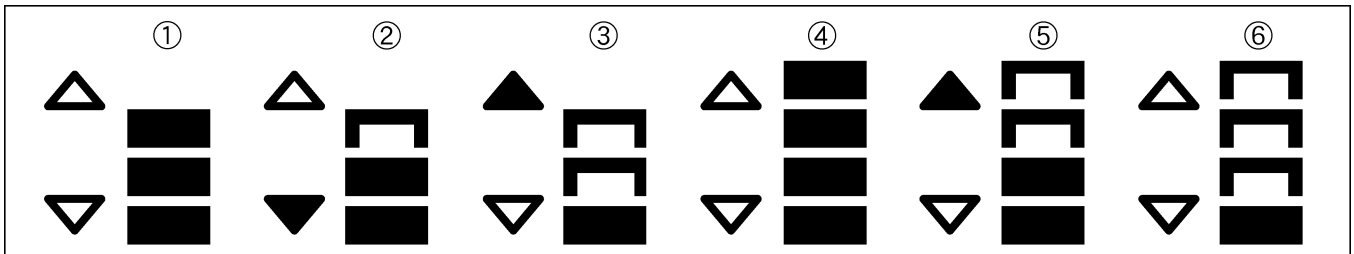

1AGBEAAAP014K

No.	Set shift-down range	Actual speed position
(1)	2 shifts (factory setting)	The current speed is the highest position of the set speeds. The load and the set speed are in balance.
(2)		The current speed is shifted 1 speed down from the highest position. The load is large and the machine is about to shift down by 1 more speed.
(3)		The current speed is shifted 2 speeds down from the highest position. The load is light and the machine is about to shift up by 1 speed.
(4)	3 shifts (when setting is changed)	The current speed is the highest position of the set speeds. The load and the set speed are in balance.
(5)		The current speed is shifted 2 speeds down from the highest position. The load is light and the machine is about to shift up by 1 speed.
(6)		The current speed is shifted 3 speeds down from the highest position.

https://truckmanualshub.com/

■Changing the Field Speed

Using the up-shift/down-shift button on the armrest or on the power shift / range shift lever, the field speed can be readily changed. To put the speed in memory, however, preferably take the following procedure.

◆ **To change the speed while the tractor is stopped**

Place the power shift / range shift lever to "N", press the up-shift/down-shift button, and change the field speed. The speed that appears in the selected-speed display will be the new upper speed level.

◆ **To increase the speed while running the tractor**

Check the speed that appears in the selected-speed display.

(When the speed display stays on - Not flashing)

1. Press the up-shift button (+) to raise the speed.
2. The speed that appears in the selected-speed display is the new upper speed level.

(When the speed display is flashing)

1. Press the up-shift button (+) to raise the speed.
2. Travel mode
   (trailing and other hauling operations)
   Press the top (Travel mode) of the Auto-Mode switch to the 2nd stage.
3. Field mode
   (plowing, subsoiling and other tilling operations, or for harvesters and other PTO-driven implements)
   Press the bottom (Field mode) of the Auto-Mode switch to the 2nd stage.
4. The speed that appears in the selected-speed display is now the new upper speed level.

◆ **To decrease the speed while running the tractor**

1. Press the down-shift button (-) to lower the speed.
2. Travel mode
   (trailing and other hauling operations)
   Press the top (Travel mode) of the Auto-Mode switch to the 2nd stage.
3. Field mode
   (plowing, subsoiling and other tilling operations)
   Press the bottom (Field mode) of the Auto-Mode switch to the 2nd stage.
4. The flashing number stays on. The speed that appears in the selected-speed display is now the new upper speed level.

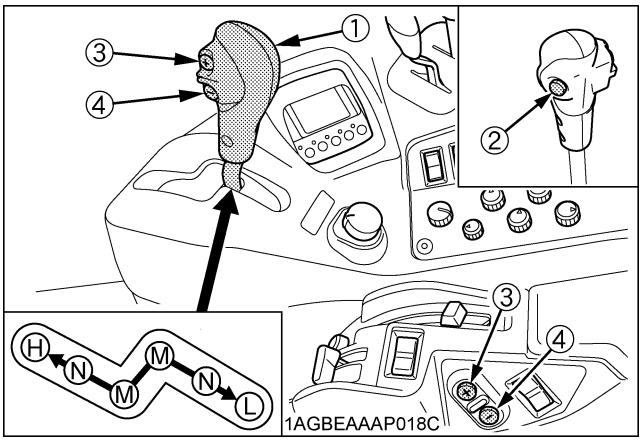

(1) Power shift / Range shift lever
(2) Clutch button
(3) Up-shift button (+)
(4) Down-shift button (-)

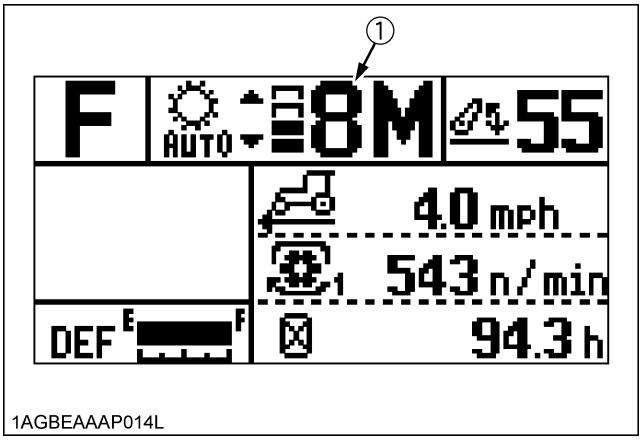

(1) Selected-speed display

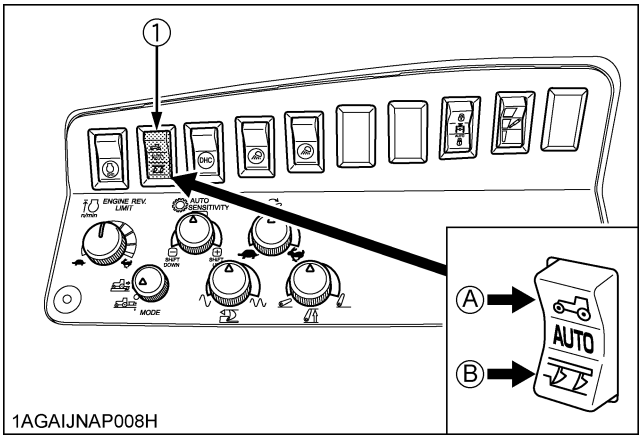

(1) Auto-Mode switch
(A) "Travel mode"
(B) "Field mode"

https://truckmanualshub.com/

■Sensitivity Adjustment

The automatic shift-up/down sensitivity can be adjusted to meet engine load fluctuations.

Turn the dial to the negative side.	Higher sensitivity for shift-down and lower sensitivity for shift-up
Turn the dial to the positive side.	Higher sensitivity for shift-up but the same sensitivity for shift-down.

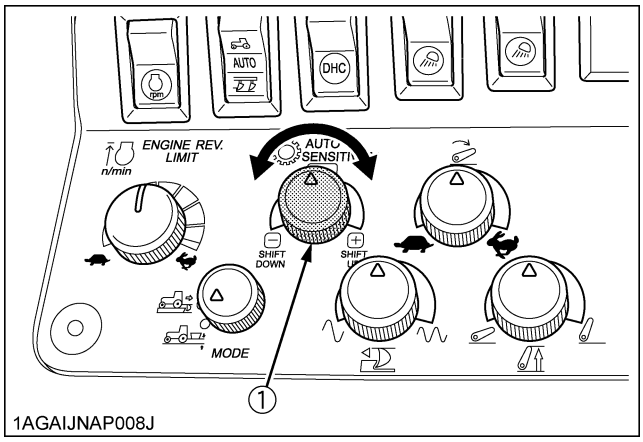

(1) Auto-Mode sensitivity adjustment dial

■Changing the Auto-Mode Setting

The Auto-Mode has been factory-set as shown in the chart on the next page. The setting can be modified as required.

◆ Changing the travel mode setting

[The automatic speed range and the shift-down speed at acceleration pedal release can be modified.]

1. Place the power shift / range shift lever to "N", and start the engine.
2. Push and hold down the top (Travel mode) of the Auto-Mode switch to the 2nd stage for more than 3 seconds. The buzzer sounds beeping and the setting mode is called.
3. Now each time the top (Travel mode) of the Auto-Mode switch is pressed, "r" (automatic speed) and "A" (acceleration pedal release shift-down speed) appear flashing alternately.

Changing the automatic speed at engine load detection (RPM)

4. Using the Auto-Mode switch, make "r" appear in the display. Hold down the top (Travel mode) of the Auto-Mode switch, and the current speed setting starts flashing.
5. Each time the top (Travel mode) of the Auto-Mode switch is pressed, "2", "3" and "4" appear flashing one after another. When a desired speed setting comes up, hold down the switch again for more than 3 seconds. The flashing number stays on and the setting is completed.
6. This setting refers to how many gears the Auto-shift will use up/down, when the engine rpm changes (without using the throttle).
   <Example>
   2 gears = 1 shift
   3 gears = 2 shifts
   4 gears = 3 shifts

Changing the automatic shift-down speed at acceleration pedal release (Throttle operation)

7. Using the Auto-Mode switch, make "A" appear in the display. Hold down the top (Travel mode) of the Auto-Mode switch, and the current speed setting starts flashing.
8. Each time the top (Travel mode) of the Auto-Mode switch is pressed, "0", "1" "2" and "3" appear flashing one after another. When a desired speed setting comes up, hold down the switch again for more than 3 seconds. The flashing number stays on and the setting is completed.
9. This setting refers to how many shifts the tractor will Auto-shift up/down when the operator uses the throttle.
   <Example>
   0 = No shift
   1 = 1 shift
   2 = 2 shifts
   3 = 3 shifts

◆ Changing the field mode setting

[The automatic speed range and the shift-down speed at attachment lift can be modified.]

1. Place the power shift / range shift lever to "N", and start the engine.
2. Hold down the bottom (Field mode) of the Auto-Mode switch to the 2nd stage for more than 3 seconds. The buzzer sounds beeping and the setting mode is called.
3. Each time the bottom (Field mode) of the Auto-Mode switch is pressed, "r" (automatic speed) and "P" (attachment lift shift-down speed) appear flashing alternately.

Changing the automatic speed at engine load detection (RPM)

4. Using the Auto-Mode switch, make "r" appear in the display. Hold down the bottom (Field mode) of the Auto-Mode switch, and the current speed setting starts flashing.
5. Each time the bottom (Field mode) of the Auto-Mode switch is pressed, "2", "3" and "4" appear flashing one after another. When a desired speed setting comes up, hold down the switch again for more than 3 seconds. The flashing number stays on and the setting is completed.

https://truckmanualshub.com/

6. This setting refers to how many gears the Auto-shift will use up/down, when the engine rpm changes (without using the throttle).
   <Example>
   2 gears = 1 shift
   3 gears = 2 shifts
   4 gears = 3 shifts

Changing the automatic shift-down speed at 3-point hitch lift

7. Using the Auto-Mode switch, make "P" appear in the display. Hold down the bottom (plow marking) of the Auto-Mode switch, and the current speed setting starts flashing.
8. Each time the bottom (plow marking) of the Auto-Mode switch is pressed, "0", "1" "2" and "3" appear flashing one after another. When a desired speed setting comes up, hold down the switch again for more than 3 seconds. The flashing number stays on and the setting is completed.
9. This setting refers to how many shifts the tractor will Auto-shift down when the operator raises the 3-point hitch.
   <Example>
   0 = No shift down
   1 = 1 shift
   2 = 2 shifts
   3 = 3 shifts

https://truckmanualshub.com/

◆ **Changing the Auto-Mode settings**

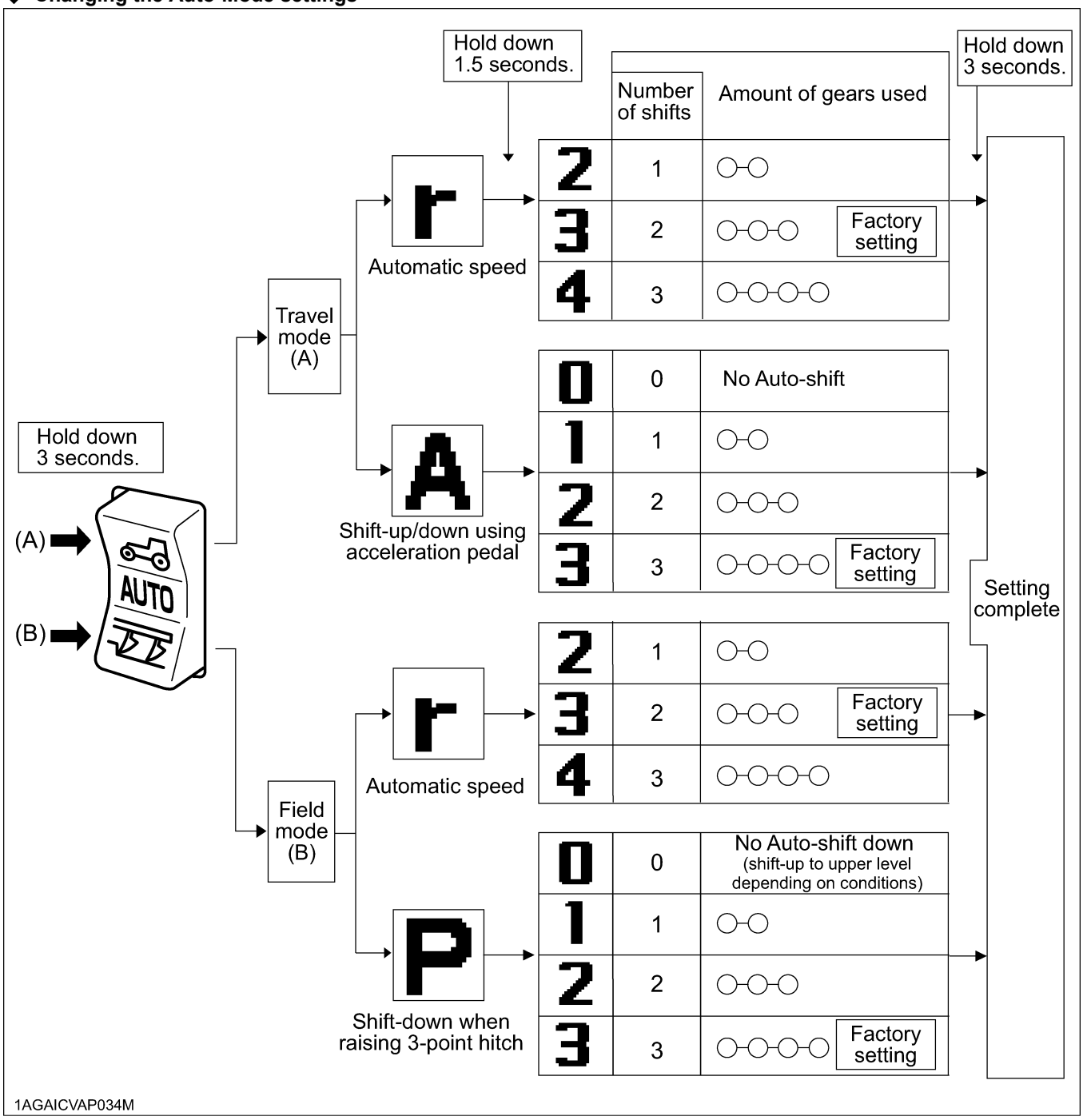

NOTE :

- It is impossible to preset a greater number of shift-down speeds than the number of automatic speeds.
- If the key switch is moved to "OFF" or the Auto-Mode switch is turned "OFF" halfway, the setting is cancelled.

https://truckmanualshub.com/

FRONT SUSPENSION

WARNING

To avoid personal injury or death:

- **The front suspension control system is working when the engine is running. In the ON mode, the LOCK mode or the AUTO LOCK mode, the control system will subtly change the machine's height at startup or as weight changes when implements are attached. These subtle movements can be unexpected. Before starting it, make sure the area near the machine is clear of all persons and objects.**

■Outline

The front suspension system works to absorb shocks and vibrations that can be caused by field surface conditions, road surface conditions, and changes in weight caused by implements. Different implements can change the way a tractor carries weight and that weight is also changed when driving in the field or driving on the road. The front suspension system provides the operator with a smoother ride, improved tractor stability, and higher productivity. The front suspension control system has two control switches that allow the operator to adjust the suspension system to operating conditions. Those switches are the Suspension Switch and the Ride Condition Damper Switch. The operator can quickly adjust the suspension system to changing conditions with the touch of buttons.

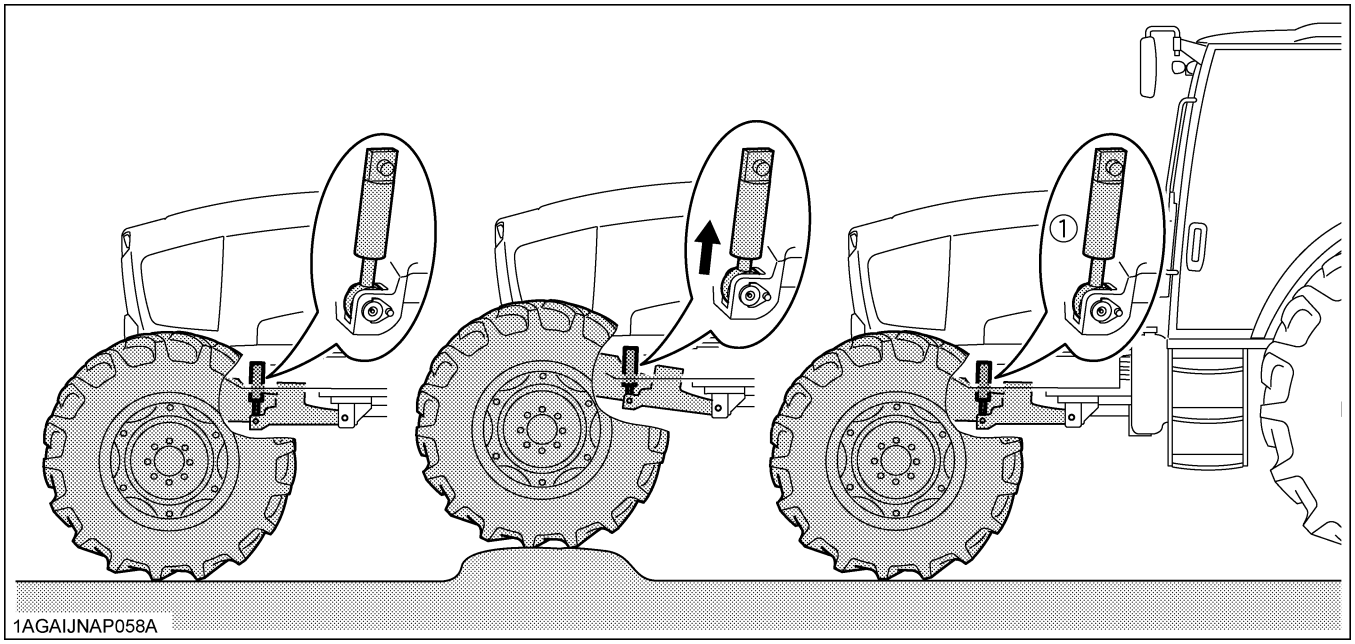

(1) Suspension cylinder

■Suspension Switch

WARNING

To avoid personal injury or death:

- **Before using the suspension switch, make sure the area near the machine is clear of all persons and objects. The hydraulic pressure in the suspension cylinders, accumulators or a valve can cause the tractor and the attached implement to move unexpectedly.**

Using the front suspension switch, the following 3 modes can be selected: ON, LOCK, and AUTO LOCK. While the "ON" or "AUTO LOCK" is selected, the suspension indicator is illuminated. In the "LOCK" mode, the indicator is not illuminated.

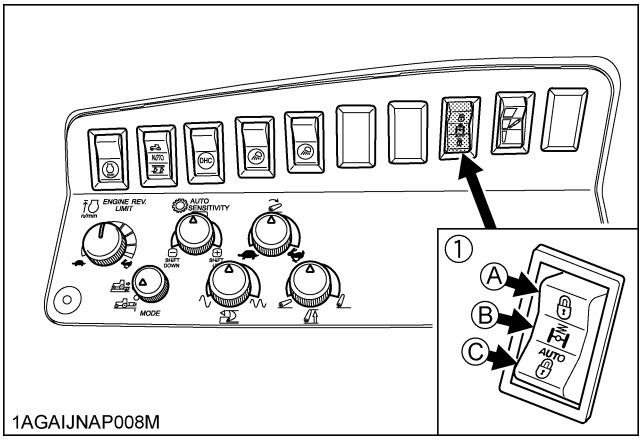

(1) Suspension switch

(A) Suspension "LOCK"
(B) Suspension "ON"
(C) Suspension "AUTO LOCK"

https://truckmanualshub.com/

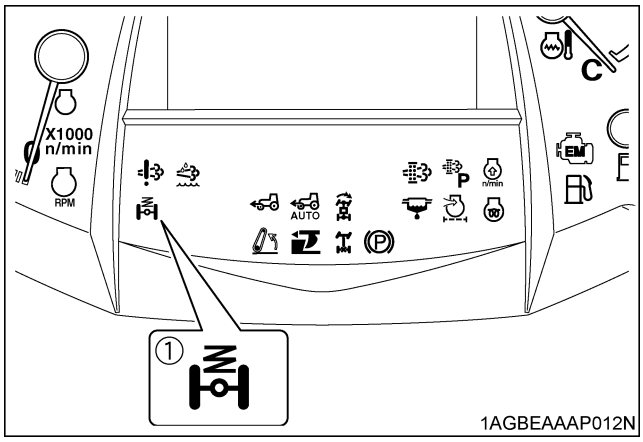

(1) Suspension indicator

◆ **Suspension "ON" Mode**

Whether driving on roads or doing work, the ON mode reacts to changing surface conditions and the changing weight of the tractor as implements are used. The ON mode is usually selected. When the ON mode is selected, the suspension indicator is illuminated.

◆ **Suspension "LOCK (OFF)" Mode**

The suspension system is locked out, and no suspension action takes place. The LOCK mode should be selected when the operator needs to prevent the tractor and the attached implements from overcompensating the front suspension system. The suspension indicator does not illuminate when the LOCK mode is selected.

◆ **Suspension "AUTO LOCK" Mode**

In this mode, the suspension is automatically selected LOCK or ON as listed in the table below.

The suspension indicator is illuminated when the AUTO LOCK mode is selected.

3-Point Hitch Control Mode	Suspension	
	LOCK	ON
Position selected	● At low-speed travel ● At lower 3-point hitch	● While travelling ● At higher 3-point hitch
Draft selected	● With heavy draft load (at lower 3-point hitch) ● At lower travel speed ● While the 3-P. Quick lower switch is pressed	● With light draft load (at lower 3-point hitch) ● At higher 3-point hitch

Example: Front End Loader operation (position mode)

In order to efficiently perform Front End Loader work, the suspension stays locked at lower speeds. This helps hold the tractor in a stable condition. While traveling, the suspension is turned on for comfortable ride.

Example: Plowing (draft mode)

When a drafted load becomes heavy, the suspension gets locked. When the load becomes lighter, the suspension is turned on. In moving with the plow up, the suspension is kept on.

NOTE :

- In the AUTO LOCK mode, the hydraulic pressure in the suspension cylinders, accumulators or a valve may cause the machine height to change, when the suspension system switches automatically from "LOCK" to "ON" status.
- The suspension cylinder adjustment control does not work in the operating conditions below.
  (1) The front wheels are overloaded.
  (2) The engine runs at low speeds and the oil temperature is high.
  (3) Both the brake pedals are stepped down.
  (4) The manual control mode is selected.
- The machine speed in the suspension auto lock mode has been factory-setting at below 3 km/h (1.9 mph). To change this setting, contact your local KUBOTA Dealer.

https://truckmanualshub.com/

■Ride Condition Damper Switch

The suspension dampening can be adjusted by using the Ride Condition Damper Switch. To adjust the suspension dampening you must have the Suspension Switch set to the ON mode or the AUTO LOCK mode. Set the Ride Condition Damper Switch to match implement, ground conditions, and the type of work you are doing.

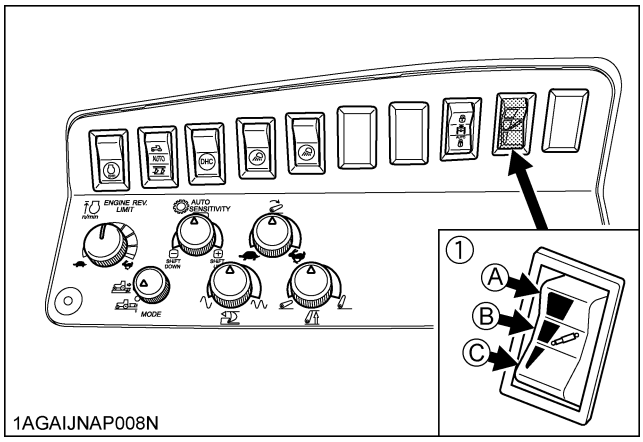

(1) Ride condition damper switch
(A) "FIRM MODE"
(B) "NORMAL MODE"
(C) "SOFT MODE"

◆ Normal Mode

In Normal mode, the tractor will automatically select the optimum dampening force between soft, medium, and firm to insure the best ride. The suspension dampening should be selected based on the tractors gross weight with implements. Of the three modes (Normal mode, Firm mode, Soft mode), Normal mode is generally recommended for most tractor work.

◆ Firm Mode

In Firm mode, the suspension damping is set one level higher than Normal mode. As an example, the operator would use Firm mode when working with heavy implements to prevent "rocking" or excessive bouncing, for example a heavy round bale in the loader.

◆ Soft Mode

In Soft mode, the suspension system is set one level lower than Normal mode. As an example, the operator would use Soft mode when traveling on uneven or rough road surfaces to obtain a more comfortable ride.

NOTE :

- Depending on the tractor gross weight, the "Firm" and "Soft" modes may work at nearly the same as the "Normal" mode.

■Manual Control Mode

WARNING

To avoid personal injury or death:

- **Before releasing the manual control mode, make sure the area near the machine is clear of all persons and objects.**
  Because of the hydraulic pressure in the cylinder, the machine height may change unexpectedly or the suspension cylinder adjustment control may get activated, which affects the height and/or posture of the tractor or the implement.

The tractor front end height can be raised or lowered by moving the suspension cylinder in the manual control. This is useful in attaching and detaching a front implement or front weight.

◆ Height adjusting procedure

1. Hold down the top (Firm mode) or the bottom (Soft mode) of the ride condition damper switch to the second stage for more than 3 seconds, and the buzzer starts beeping and the suspension indicator starts flashing (2 or so flashes every second). Now the machine gets in the manual control mode.
2. Hold down the top (Firm mode) of the ride condition damper switch to the second stage, and the height is raised.
3. Hold down the bottom (Soft mode) of the ride condition damper switch to the second stage, and the height is lowered.

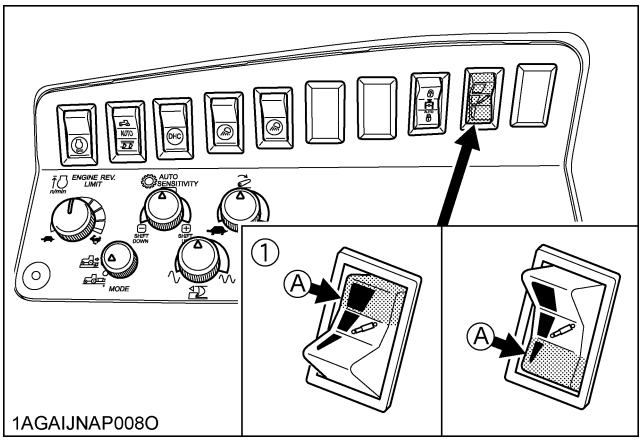

(1) Ride condition damper switch
(A) "PRESS DOWN TO THE SECOND STAGE"

https://truckmanualshub.com/

◆ **Releasing the manual control mode**

Reposition the suspension switch (to "ON", "LOCK" or "AUTO LOCK") to release the manual control mode. When released, the modes pre-selected with the suspension switch and the ride condition damper switch are resumed.

NOTE :
- The manual control mode is cleared in any of the following cases.

1. Stopping the engine (turning OFF the key switch).
2. Running the machine at higher than 5 km/h (3.1 mph).

IMPORTANT :
- Do not run or operate the machine with its height raised or lowered (while the manual control mode is selected). Otherwise it may get in trouble.

NOTE :
- Even in the manual control mode, the suspension works according to the mode selected with the suspension switch.
- With the "LOCK" mode selected, the machine height becomes stable and an implement may be easily attached and detached.
- The manual-mode raising and lowering speed varies depending on the mode selected with the suspension switch.

PARKING

■Parking

WARNING

To avoid personal injury or death:
BEFORE DISMOUNTING TRACTOR
- **ALWAYS SET PARKING BRAKE AND LOWER ALL IMPLEMENTS TO THE GROUND.**
  Leaving transmission in gear with the engine stopped will not prevent the tractor from accidental rolling.
- **STOP THE ENGINE AND REMOVE THE KEY.**

1. Before getting off the tractor, disengage the PTO, lower all implements, place all control levers in their neutral positions, pull the parking brake lever up to park, stop the engine and remove the key.
2. If it is necessary to park on an incline, be sure to chock the wheels to prevent accidental rolling of the machine.

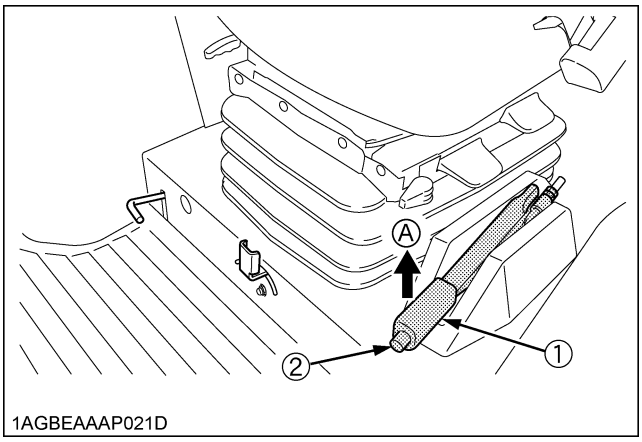

(1) Parking brake lever *(A) "PULL"*
(2) Release button

IMPORTANT :
- Do not leave your tractor in the rain. If it cannot be avoided, cover the muffler pipe to prevent water entering.

NOTE :
- On the tractors equipped with the front suspension, the machine height may change depending on the hydraulic oil temperature or other factors.

OPERATING TECHNIQUES

■Differential Lock

WARNING

To avoid personal injury or death due to loss of steering control:
- **Do not operate the tractor at high speed with any differential lock engaged.**
- **Do not attempt to turn with the rear wheel differential lock engaged.**
- **Be sure to release the rear wheel differential lock before making a turn in field conditions.**

https://truckmanualshub.com/

■Rear Wheel Differential Lock Pedal

If one of the rear wheels should slip, step on the differential lock pedal. Both wheels will turn together, then reduce slippage.
Differential lock is maintained only while the pedal is depressed.

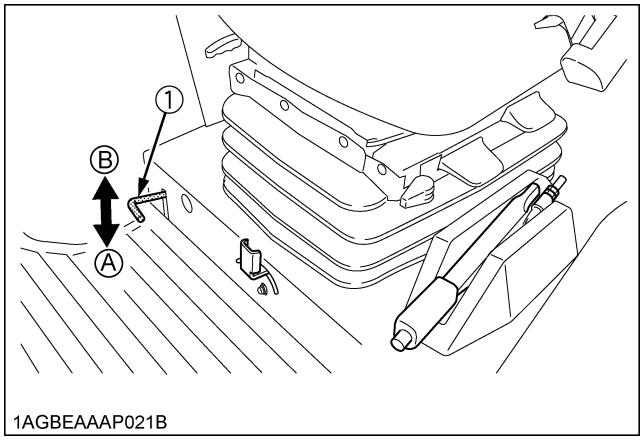

(1) Differential lock pedal *(A) Press to "ENGAGE"* *(B) Release to "DISENGAGE"*

◆ Rear wheel differential lock indicator

While the differential lock pedal is stepped on, rear wheel differential lock indicator will come on. It will go off when the pedal is released.

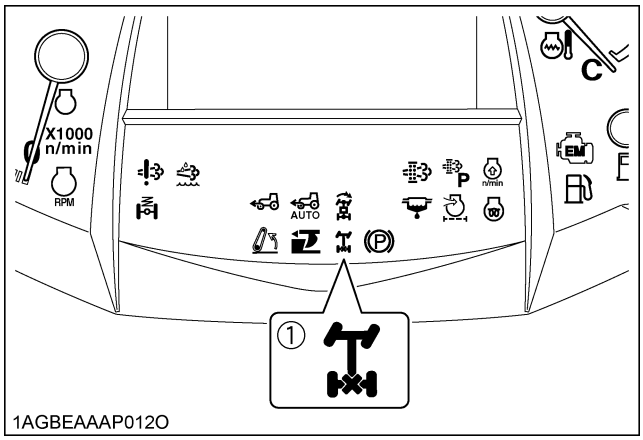

(1) Rear wheel differential lock indicator

IMPORTANT :
- When using the differential lock, always slow the engine down.
- To prevent damage to power train, do not engage differential lock when one wheel is spinning and the other is completely stopped.
- If the differential lock cannot be released, step lightly on the brake pedals alternately.

■Front Wheel Differential Lock Switch

1. If the front and/or rear wheels should slip while driving straight in field conditions, press the front wheel differential lock switch and step on the rear wheel differential lock pedal. The 4 wheels will then turn together, reducing slippage.
2. If the front and/or rear wheels slip while in a turn in field conditions, push on the front wheel differential lock switch only. The front wheels alone will rotate together for easy turning.
3. To release the front wheel differential lock, press the switch again.

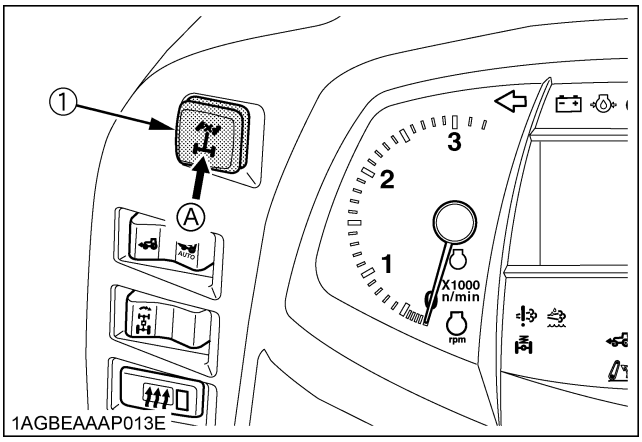

(1) Front wheel differential lock switch with indicator *(A) "PUSH"*

NOTE :
- The front wheel differential lock mechanism works only when the 4WD/Auto 4WD switch is at the ON position.
- The front wheel differential lock switch's indicator turns on while the front differential lock is engaged.

IMPORTANT :
- Always slow down the engine before pushing on the differential lock switch.
- To prevent damage to power train, do not engage differential lock when one wheel is spinning and the other is completely stopped.

https://truckmanualshub.com/

■Operating the Tractor on a Road

WARNING

To avoid personal injury or death:

- **To help assure straight line stops when driving at transport speeds, lock the brake pedals together. Uneven braking at road speeds could cause the tractor to roll-over.**
- **When traveling on road with 3-point hitch mounted implement attached, be sure to have sufficient front weight on the tractor to maintain steering ability.**
- **When traveling on road with trailer, you must comply with local regulation at all time.**
  The maximum traveling speed with trailer is provided by each country and regulated speed may be different depend on the size of trailer and type of trailer brake system.

Be sure SMV emblem and warning lamps are clean and visible. If towed or rear-mounted equipment obstructs these safety devices, install SMV emblem and warning lamps on equipment.
Consult your local KUBOTA Dealer for further details.

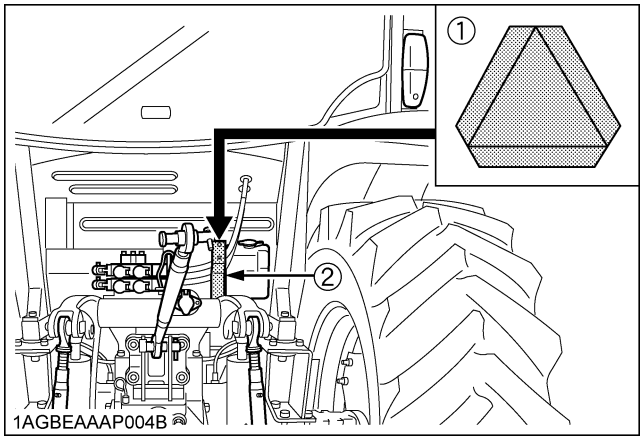

(1) SMV emblem
(2) Bracket

■Operating on Slopes and Rough Terrain

WARNING

To avoid personal injury or death:

- **Always back up when going up a steep slope. Driving forward could cause the tractor to tip over backward. Stay off hills and slopes too steep for safe operation.**
- **Avoid changing gears when climbing or descending a slope.**
- **If operating on a slope, never disengage the clutch or shift levers to neutral. Doing so could cause loss of control.**
- **Do not drive the tractor close to the edges of ditches or banks which may collapse under the weight of the tractor. Especially when the ground is loose or wet.**

1. Be sure wheel tread is adjusted to provide maximum stability.
   (See "WHEEL ADJUSTMENT" in "TIRES, WHEELS AND BALLAST" section.)
2. Slow down for slopes, rough ground, and sharp turns, especially when transporting heavy, rear mounted equipment.
3. Before descending a slope, shift to a gear low enough to control speed without using brakes.

■Transport the Tractor Safely

1. The tractor, if damaged, must be carried on a truck. Secure the tractor tightly with ropes.
2. Follow the instruction below when towing the tractor: Otherwise, the tractor's powertrain may get damaged.
   - Set the all shift levers to "NEUTRAL" position.
   - If possible, start engine and select 2WD, if creep speed is fitted ensure that it is disengaged.
   - Tow the tractor using its front hitch or drawbar.
   - Never tow faster than "10 km/h (6.2 mph)".

■Directions for Use of Power Steering

1. Power steering is activated only while the engine is running. Slow engine speeds make the steering a little heavier. While the engine is stopped, the tractor functions in the same manner as tractors without power steering.
2. When the steering wheel is turned all the way to the stop, the relief valve is activated. Do not hold the steering wheel in this position for a long period of time.
3. Avoid turning the steering wheel while the tractor is stopped, or tires may wear out sooner.
4. The power steering mechanism makes the steering easier. Be careful when driving on a road at high speeds.

https://truckmanualshub.com/

■Trailer Electrical Outlet

A trailer electrical outlet is supplied for use with trailer or implement.

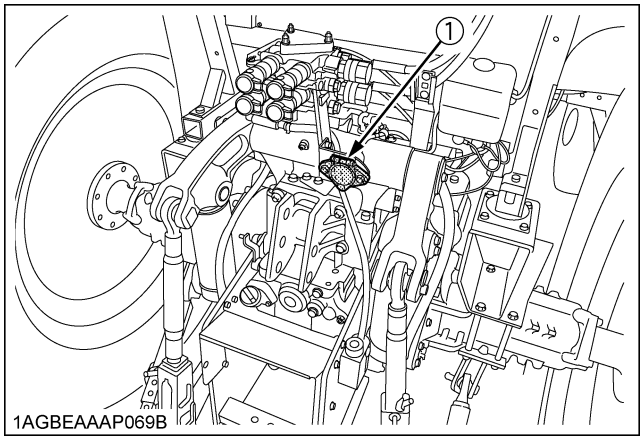

(1) Trailer electrical outlet

◆ **Function of each terminals in trailer electrical outlet**

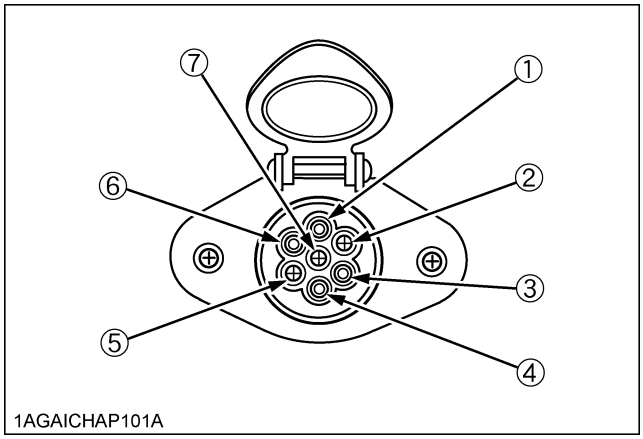

Terminal	Function
(1)	Ground
(2)	Tail light Sidemarker light Parking light
(3)	Turn signal light (LH)
(4)	Brake stop light
(5)	Turn signal light (RH)
(6)	Registration plate light
(7)	---

https://truckmanualshub.com/

PTO

PTO OPERATION

WARNING

To avoid personal injury or death:

- **Disengage PTO, stop engine, and allow all rotating components to come to a complete stop before connecting, disconnecting, adjusting, or cleaning any PTO driven equipment.**

■PTO Clutch Control Switch

1. The tractor has a 540 rpm speed position and 6-spline shaft.
2. The PTO clutch control switch engages or disengages the PTO clutch which gives the PTO independent control.

Turn the switch to "ON" to engage the PTO clutch. Turn the switch to "OFF" to disengage the PTO clutch.

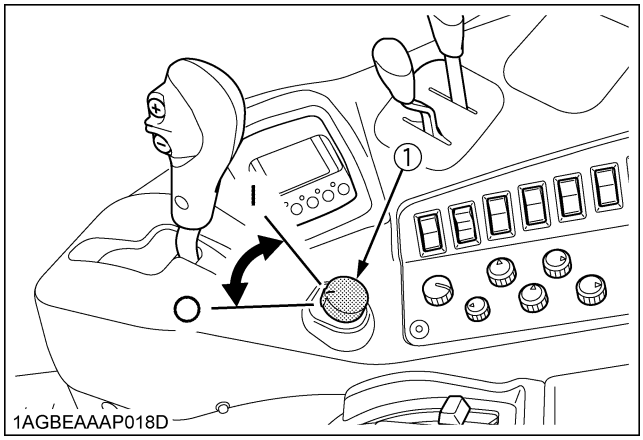

(1) PTO clutch control switch | *"ON"* ○ *"OFF"*

◆ **PTO Clutch Control Switch**

To turn ON

While pushing the switch, turn clockwise to the " | " position and release your hand. (In the ON position, switch slightly rises itself.)

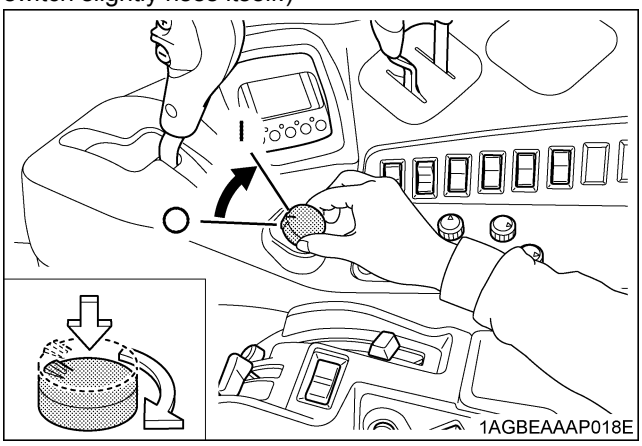

To Turn OFF

Tap on top of the switch, and the switch will return to the OFF position.

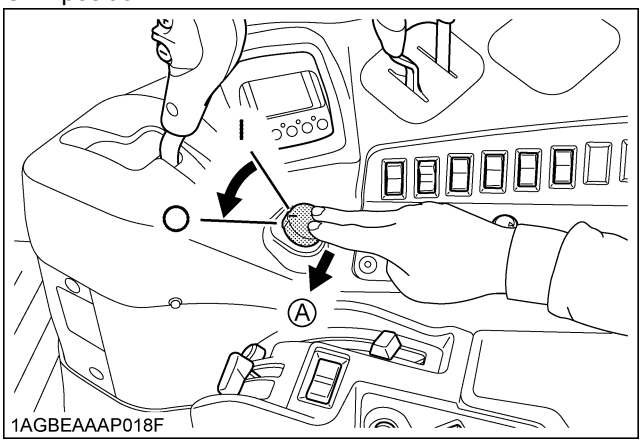

(A) "PUSH"

IMPORTANT :

- To avoid shock loads to the PTO, reduce engine speed when engaging the PTO, then open the throttle to the recommended speed.

NOTE :

- Tractor engine will not start if PTO clutch control switch is in the engaged "ON" position.
- If the PTO system is engaged and you stand up from the seat, the warning buzzer will whistle for about 10 seconds after standing up.
  This is because the tractor is equipped with "Operator Presence Control System".

https://truckmanualshub.com/

◆ **PTO Clutch Indicator**

The PTO clutch indicator turns on while PTO clutch control switch is in "ON" (Engage) position.

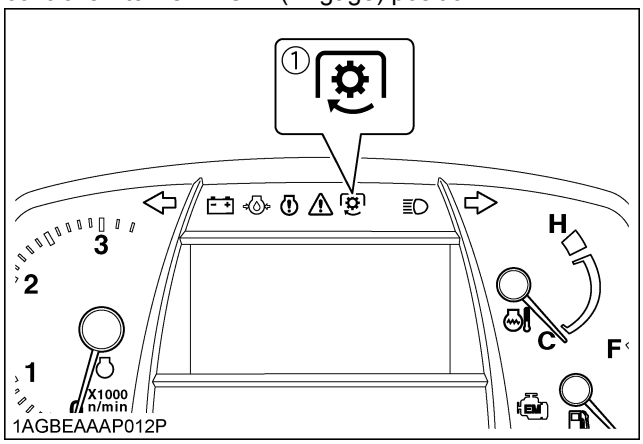

(1) PTO clutch indicator

■1000 rpm PTO Shaft

[if equipped]

WARNING

To avoid personal injury or death:

- **Be sure to observe the PTO shaft speed prescribed for the individual implements. It is extremely dangerous to run an implement at high speed that is meant to be operated at low speed. Use only when this higher rpm is specifically recommended by the implement manufacturer.**

By interchanging the PTO shafts, 2 different PTO shaft speeds can be obtained.

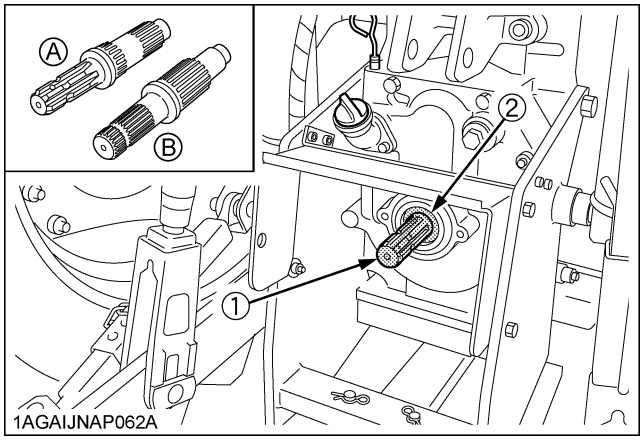

(1) PTO shaft *(A) 540 rpm PTO shaft*
(2) Snap ring *(B) 1000 rpm PTO shaft*

◆ **PTO shaft interchanging procedure**

1. The 6-spline 540 rpm PTO shaft is standard equipment.
2. Place an oil pan under the PTO shaft to catch oil spillage. Remove the snap ring, and then the PTO shaft.
3. Install the 21-spline PTO shaft (1000 rpm). To ensure that it is tight, push it in by turning.
4. Reinsert the snap ring.

IMPORTANT :

- For maximum PTO shaft speeds of various implements, see the implement Operator's Manual.

NOTE :

- Whenever the PTO speed is changed to the other speed, it is necessary to switch the PTO speed display mode of the side digital display. Otherwise the PTO speed will not get correctly displayed in the side digital display. (See "SIDE DIGITAL DISPLAY" in "OPERATING THE TRACTOR" section.)

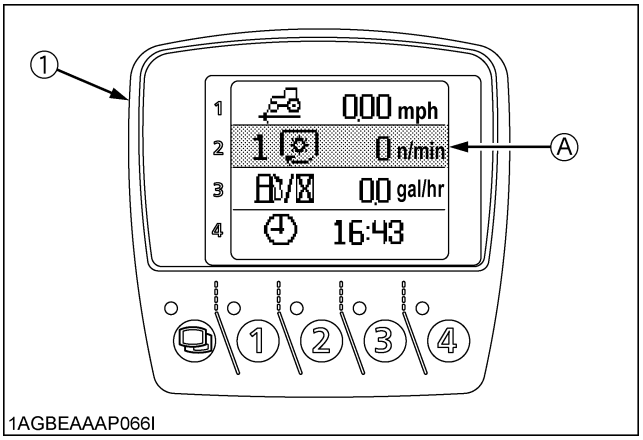

(1) Side digital display *(A) "PTO SPEED"*

https://truckmanualshub.com/

■PTO Shaft Cover and Shaft Cap

Keep the PTO shaft cover in place at all times. Replace the PTO shaft cap when the PTO is not in use. Before connecting or disconnecting a drive shaft to PTO shaft, be sure engine is "OFF". Raise up the PTO shaft cover.
Afterward be sure to return the PTO shaft cover to the "NORMAL POSITION".

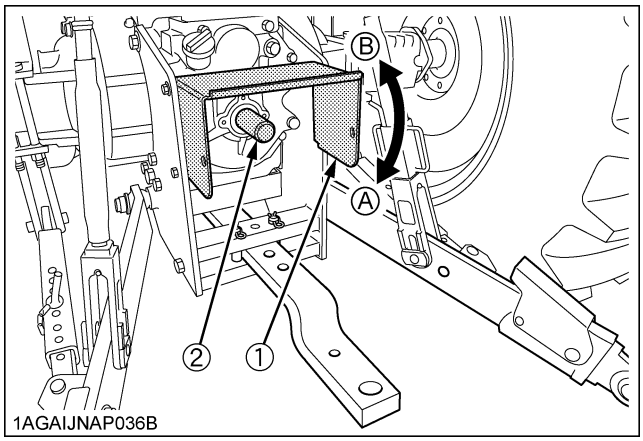

(1) PTO shaft cover
(2) PTO shaft cap
(A) "NORMAL POSITION"
(B) "RAISED POSITION"

IMPORTANT :

- The universal joint of the PTO drive shaft is technically limited in its moving angle. Refer to the PTO Drive Shaft Instructions for proper use.

https://truckmanualshub.com/

3-POINT HITCH & DRAWBAR

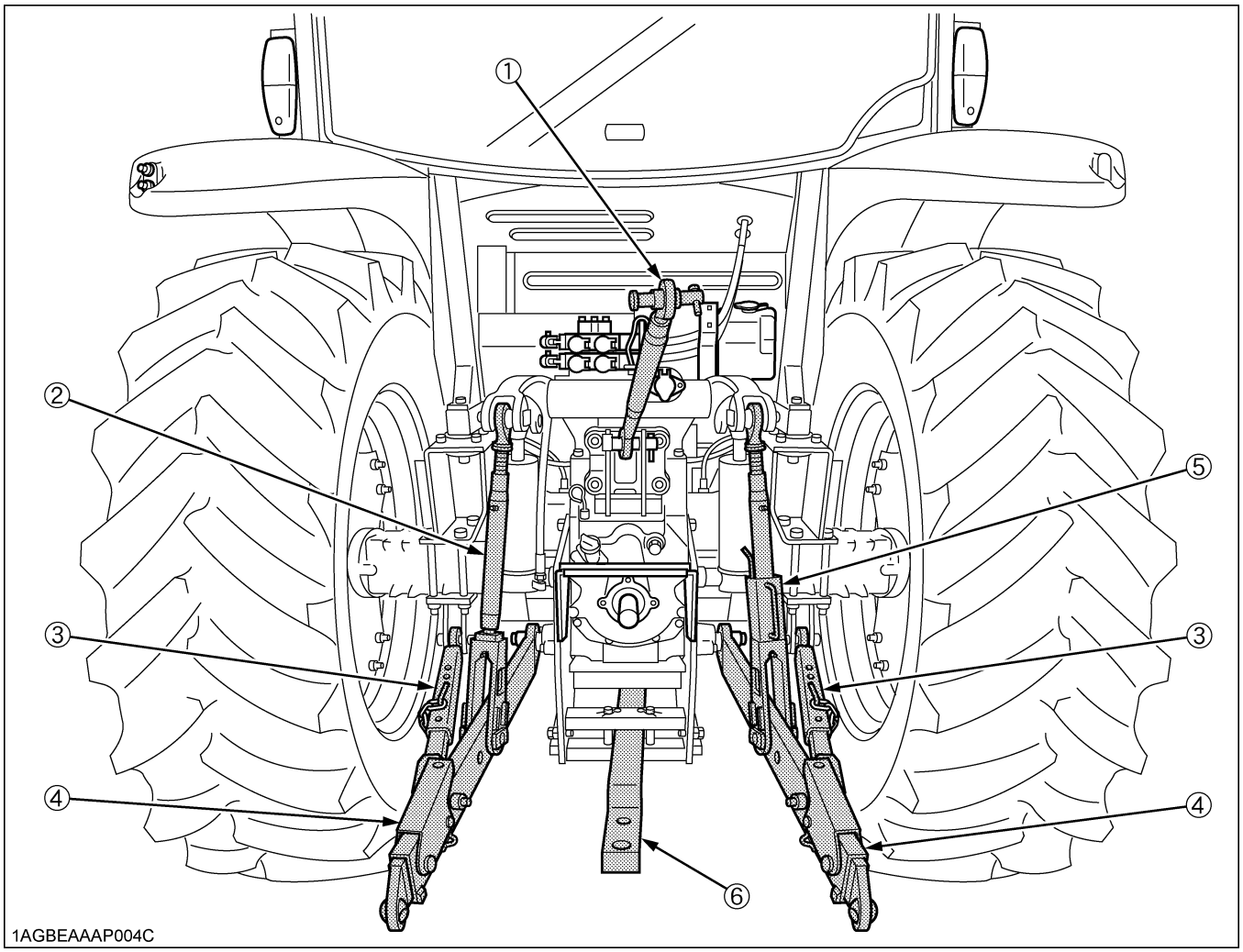

(1) Top link
(2) Lifting rod (Left)
(3) Telescopic stabilizers
(4) Lower link
(5) Lifting rod (Right)
(6) Drawbar

https://truckmanualshub.com/

3-POINT HITCH

1. Make preparations for attaching implement.

■Selecting the holes of Lower Links

There are 2 holes in the lower links. For most operations the lifting rods should be attached to the (B) hole.

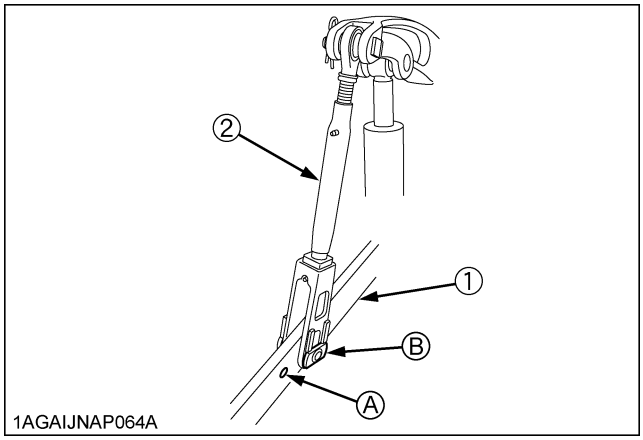

(1) Lower link
(2) Lifting rod
holes: (A), (B)

NOTE :
- The lifting rods may be attached to (A) for greater lifting force.

■Adjusting Lateral Float

To allow the implement to follow ground contour, attach the rectangular washers and pin heads in vertical position. To hold the implement, reset the rectangular washers and pin heads in horizontal position.

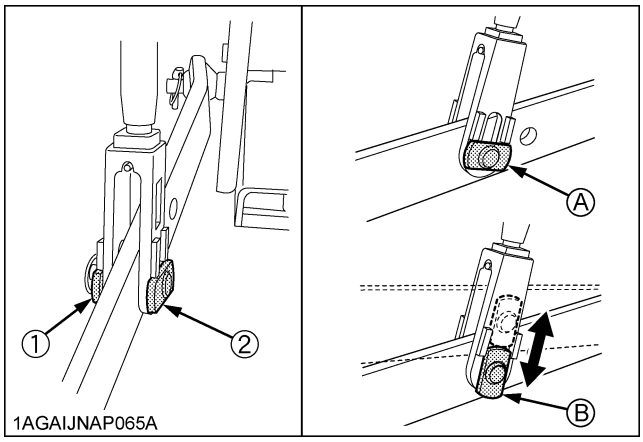

(1) Rectangular washer
(2) Pin head
(A) Horizontal position
(B) Vertical position

◆ **Floating mechanism**

When the floating mechanism is used, the implement is able to follow the tractor freely in response to the soil and ground conditions. This is suited for operation with implements wider than the tractor.

■Selecting the Top Link Mounting Holes

Select the proper set of holes by referring to the "Hydraulic Control Unit Use Reference Chart" in "HYDRAULIC UNIT" section.

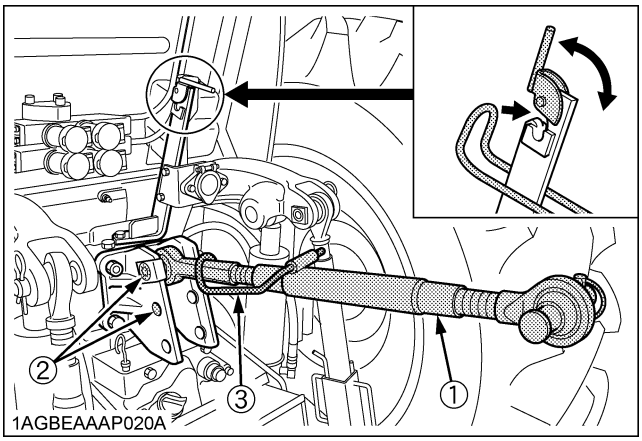

(1) Top link
(2) Mounting hole
(3) Handle

■Drawbar

Remove the drawbar if a close mounted implement is attached.

https://truckmanualshub.com/

2. Attaching and detaching implements

WARNING

To avoid personal injury or death:

- **Be sure to stop the engine.**
- **Do not stand between tractor and implement unless parking brake is applied.**
- **Before attaching or detaching implement, locate the tractor and implement on a firm level surface.**
- **Whenever an implement or other attachment is connected to the tractor 3-point hitch, check full range of operation for interference, binding or PTO separation.**
- **Do not exceed maximum allowable length of either lifting rod, or the lifting rod will come apart and the 3-point equipment may fall.**

■Remote Hitch UP / DOWN Switch

WARNING

To avoid personal injury or death:

- **Do not use the Remote hitch up / down switch when the implement is attached on the 3-point hitch.**

These switches are used to raise and lower the 3-point hitch for aligning the arm with the implement only. Press the "UP" switch and 3-point hitch goes up. Press the "DOWN" switch and the 3-point hitch comes down.
Movement of the 3-point hitch stops when the switch is released.

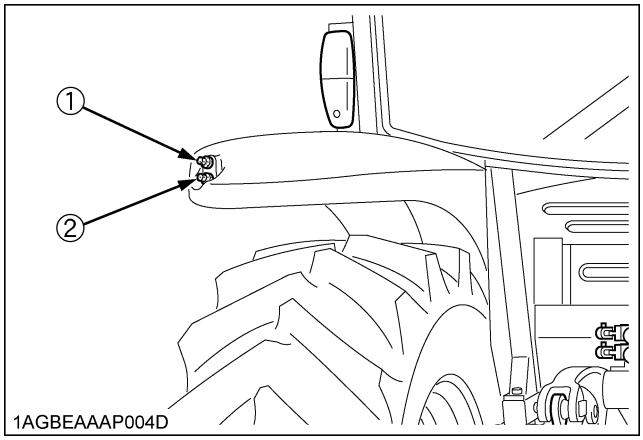

(1) "UP" switch
(2) "DOWN" switch

NOTE :

- If these switches are pushed, the 3-point hitch's position lock is activated and 3-P. Lifting / Lowering indicator starts flashing (2 or so flash every second). If it flashing, press the 3-P. quick raise switch or 3-P. quick lower switch to release the position lock. (The indicator goes off or turns on.)

■Lifting Rod (Left)

By turning the rod itself, the lifting rod varies its length.
When extending the rod, do not exceed the groove on the rod thread.

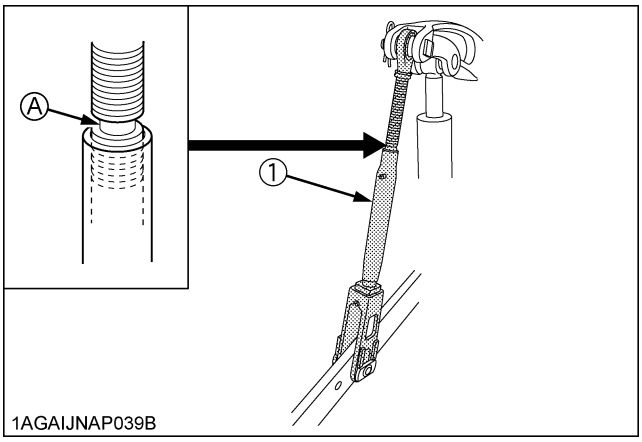

(1) Lifting rod *(A) "GROOVE"*

https://truckmanualshub.com/

■Lifting Rod (Right)

WARNING

To avoid personal injury or death:

- **Do not extend lifting rod beyond the groove on the thread rod.**

1. To adjust the length of the lifting rod, lift the adjusting handle and turn to desired length.
2. After adjusting, lower the lifting rod adjusting handle to the lock position.
3. When extending the rod using adjusting handle, do not exceed the groove on the rod thread.

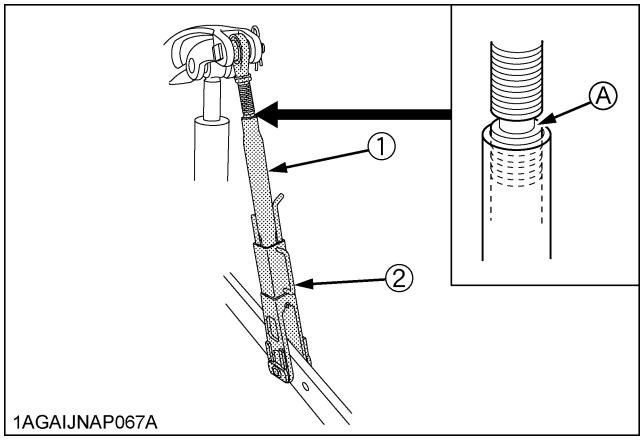

(1) Lifting rod
(2) Adjusting handle
(A) "GROOVE"

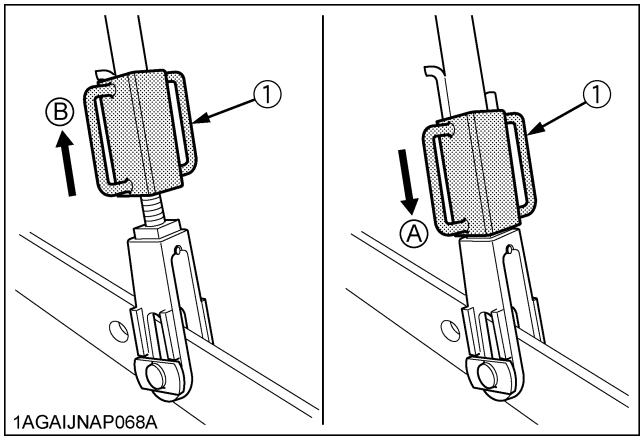

(1) Adjusting handle
(A) "LOCK POSITION"
(B) "UNLOCK POSITION"

■Top Link

1. Adjust the angle of the implement to the desired position by shortening or lengthening the top link.
2. The proper length of the top link varies according to the type of implement being used.

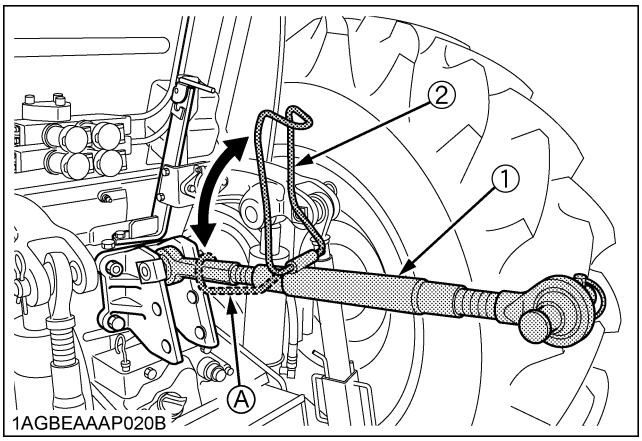

(1) Top link
(2) Handle
(A) "Lock position"

■Telescopic Stabilizers

Adjust the telescopic stabilizers to control horizontal sway of the implement. Select the proper set of holes by referring to the "Hydraulic Control Unit Use Reference Chart" in "REMOTE HYDRAULIC CONTROL SYSTEM" in "HYDRAULIC UNIT" section.

After aligning satisfactorily, insert the set-pin through any one of the 5 holes on the outer tube that align with one of the holes on the inner bar, both stabilizers will be locked.

If the set-pin is inserted through the slot to engage one of the holes on the inner bar, a limited degree of sway will be permitted.

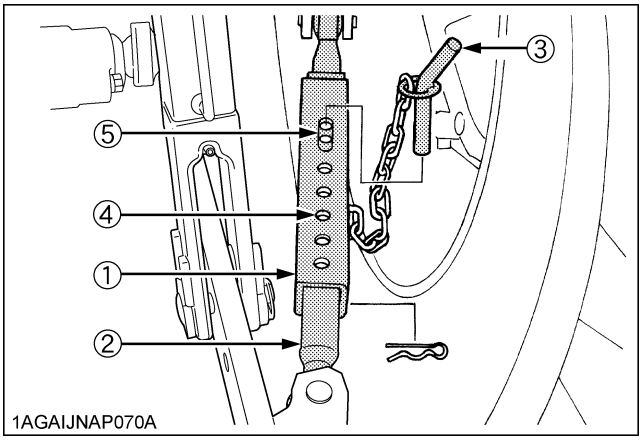

(1) Outer tube
(2) Inner bar
(3) Set-pin
(4) Hole
(5) Slot

https://truckmanualshub.com/

■Telescopic Lower Links

To attach an implement, follow the instructions below:

1. Push the levers, pull out the lower link ends, and attach to the implement.
2. Back up the tractor slightly to make sure the lower links are pushed in securely.

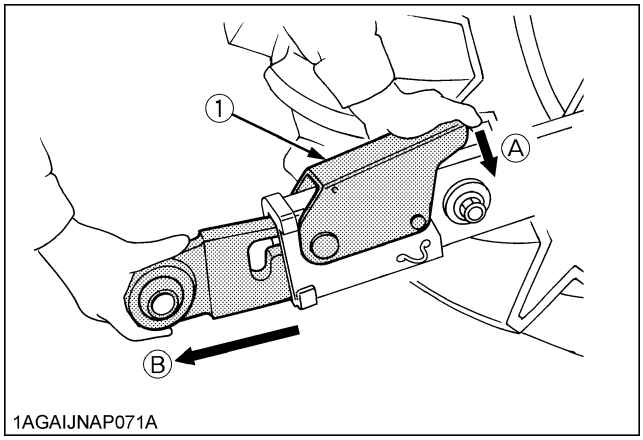

(1) Lever *(A) "PUSH"*
(B) "PULL OUT"

DRAWBAR

WARNING

To avoid personal injury or death:

- **Never pull from the top link, the rear axle or any point above the drawbar. Doing so could cause the tractor to tip over rearward causing personal injury or death.**

■Adjusting Drawbar Length

When towing an implement, it is recommended that the (A) hole in drawbar be utilized.

The drawbar load is specified in the "IMPLEMENT LIMITATIONS" section.

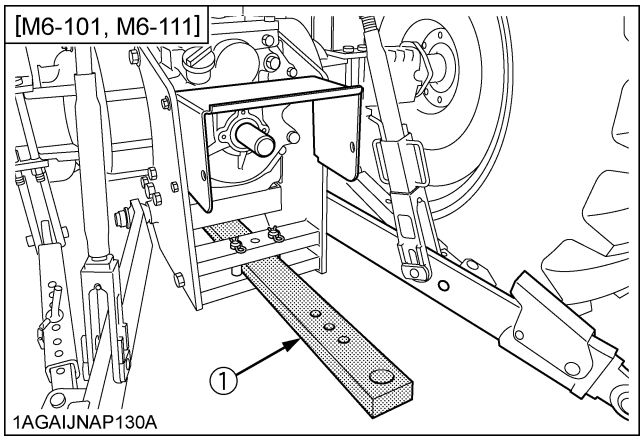

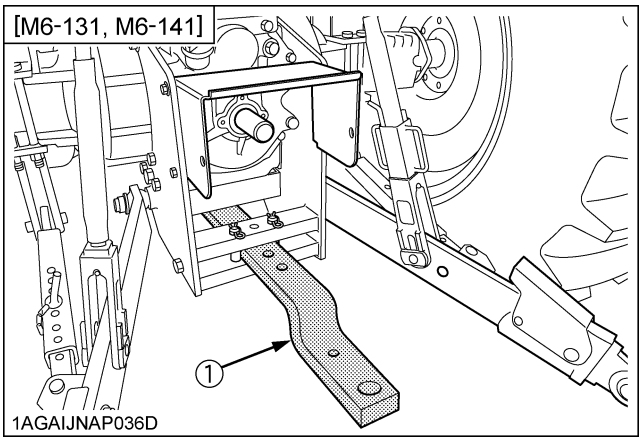

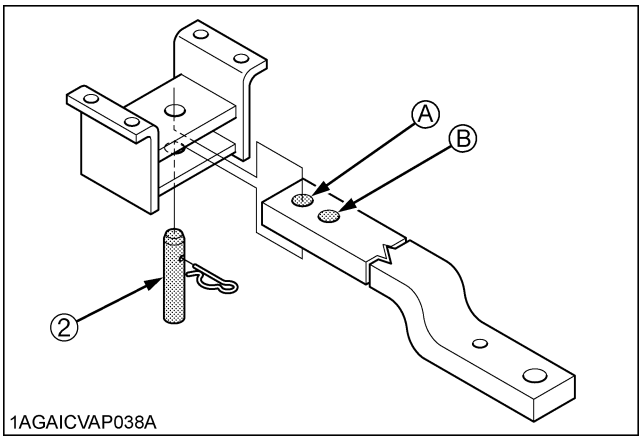

(1) Drawbar *Holes: (A), (B)*
(2) Pivot pin

■Swing Drawbar

The drawbar can be used in 3 different ways as illustrated below. Assemble it correctly with drawbar pins.

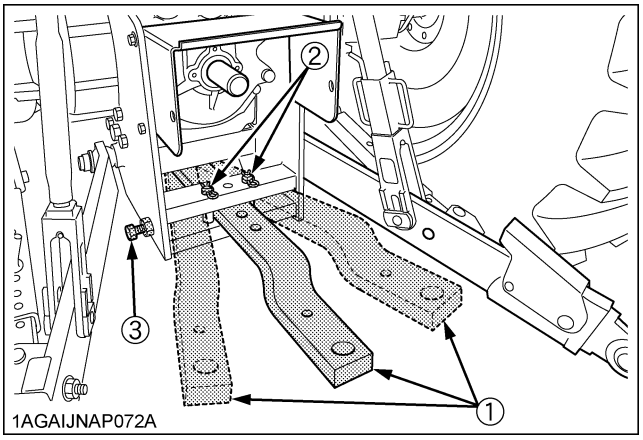

(1) Drawbar
(2) Locating pin
(3) Looseness preventing bolt

https://truckmanualshub.com/

HYDRAULIC UNIT

The standard tractor has following hydraulic control systems as shown below. Therefore, use the most appropriate system for the implement you are using.

◆ **3-Point Hitch Control System**
1. Position Control
2. Mixed Draft Control

◆ **Remote Hydraulic Control System**

IMPORTANT :
- Do not operate until the engine is warmed up. If operation is attempted when the engine is still cold, the hydraulic system may be damaged.
- If noises are heard when implement is lifting after the hydraulic control lever has been activated, the hydraulic mechanism is not adjusted properly. Unless corrected, the unit will be damaged. Contact your KUBOTA Dealer for adjustment.

3-POINT HITCH CONTROL SYSTEM

WARNING

To avoid personal injury or death:
- **Before using the 3-point hitch controls, ensure that no person or object is in the area of the implement or 3-point hitch. Do not stand on or near the implement or between the implement and tractor when operating the 3-point hitch controls.**

■Terminology

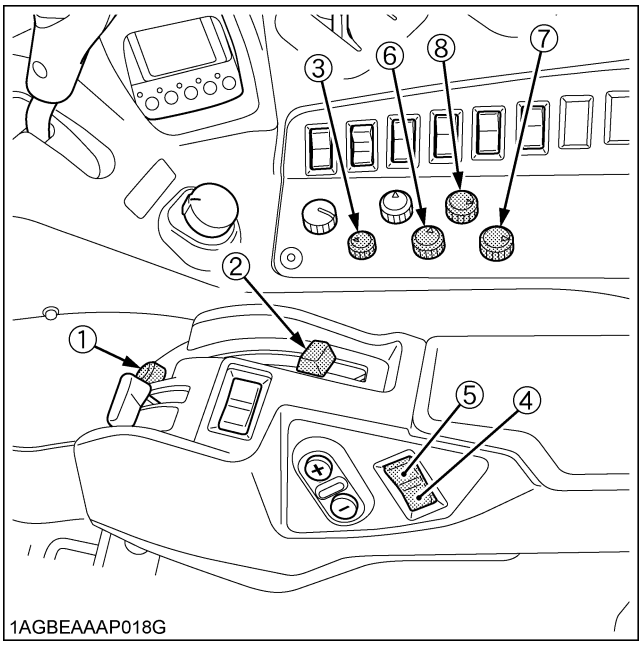

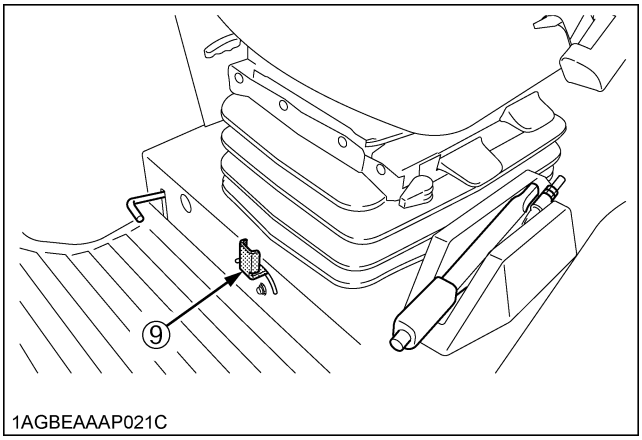

(1) Bottom limit control dial
(2) Hydraulic control lever
(3) Mode selector switch
(4) 3-P. Quick lower switch
(5) 3-P. Quick raise switch
(6) Draft ratio adjustment dial
(7) Lift arm top limit adjustment dial
(8) 3-point hitch lowering speed adjustment dial
(9) 3-point hitch lowering lock lever

https://truckmanualshub.com/

■Mode Selector Switch

Select the position control or the draft control depending on the types of work. Choose the draft control for jobs requiring traction such as plowing and sub-soiling.

Draft control selected:.....	The draft indicator lights up.
Position control selected:.....	The draft indicator goes off.

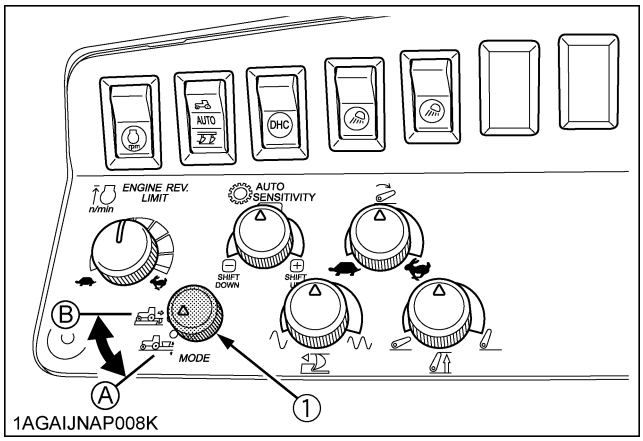

(1) Mode selector switch

(A) "POSITION CONTROL"
(B) "DRAFT CONTROL"

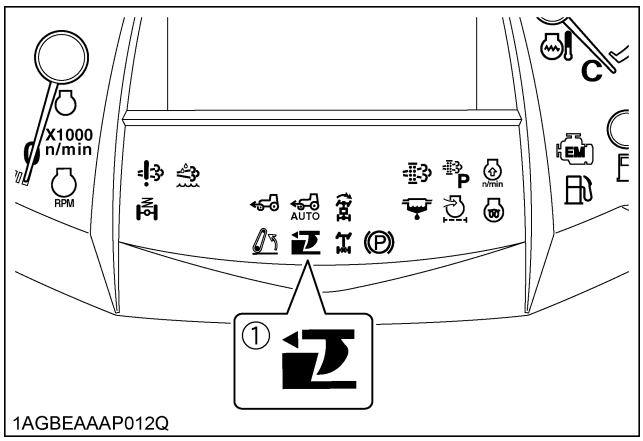

(1) Draft indicator

■Position Control Mode

◆ Hydraulic control lever

This will control the working depth of 3-point hitch mounted implement regardless of the amount of pull required.

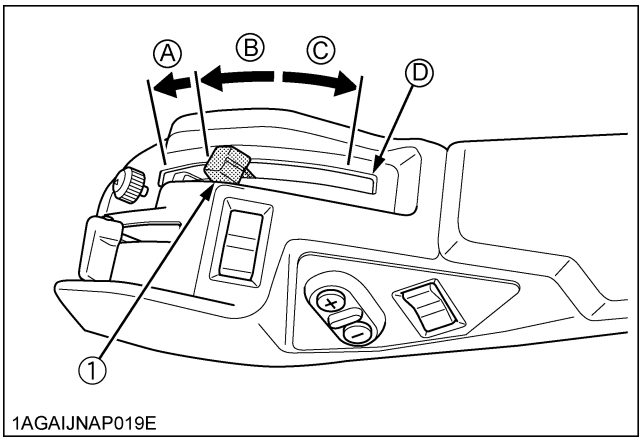

(1) Hydraulic control lever

(A) "FLOAT"
(B) "DOWN"
(C) "UP"
(D) "TRAVEL LOCK POSITION"

NOTE :

- While traveling, set the hydraulic control lever to the travel lock position (D) to prevent an unexpected drop of the implement.

https://truckmanualshub.com/

■Mixed Draft Control Mode

◆ Hydraulic control lever

This will control the pull of the 3-point implement. As the load on the 3-point hitch changes due to various soil conditions, the draft control system automatically responds to these changes by either raising or lowering the implement slightly to maintain a constant pull.
Set the implement pull with the hydraulic control lever.

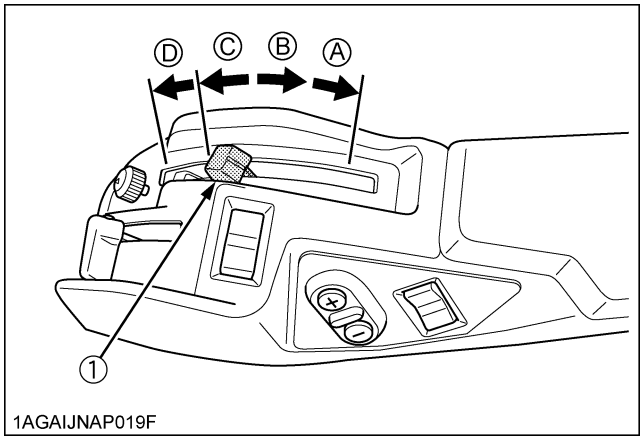

(1) Hydraulic control lever
(A) "UP"
(B) "SHALLOW"
(C) "DEEP"
(D) "FLOAT"

◆ Draft ratio adjustment dial

Set the mode selector switch to the "DRAFT" position. Turn the draft ratio adjustment dial to adjust to specific application requirement. Make settings according to the guidelines below.

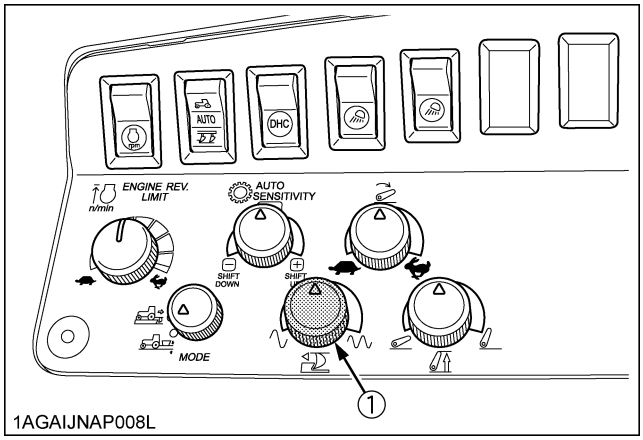

(1) Draft ratio adjustment dial

Draft ratio adjustment dial

	(Counterclockwise)	(Clockwise)
Plowing depth	Shallow	Deep
Type of soil	Light	Heavy
Field (ruggedness)	Little	Much
(Sensitivity)	(Low)	(High)

NOTE :
- The plowing depth may be affected when the draft ratio adjustment dial is used. Finally use the hydraulic control lever to readjust the plowing depth.

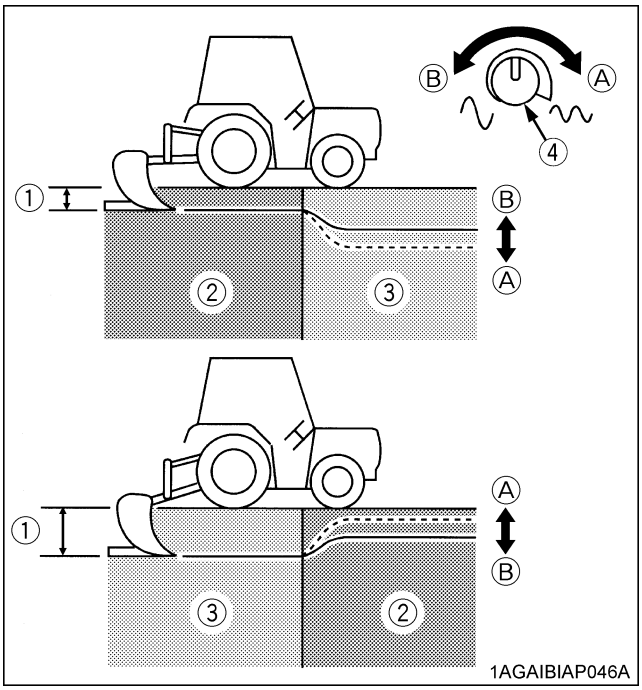

(1) Plowing depth setting
(2) Heavy soil
(3) Light soil
(4) Draft ratio adjustment dial
(A) "CLOCKWISE"
(B) "COUNTERCLOCKWISE"

■Float Control

Place the hydraulic control lever in the float position to make the lower links move freely along with the ground conditions.

NOTE: (Handling the hydraulic control lever)
- After the engine has stopped, set the key switch to the "ON" position and lower the hydraulic control lever. Now the implement goes down.
  (The implement does not go down if the position lock is activated. See "3-Point Hitch's Position Lock" in this section.)

https://truckmanualshub.com/

■Bottom Limit Control Dial

This dial is used to change the bottom limit of the 3-point hitch.

1. Turn the dial in the "UP" direction, and the bottom limit of the hydraulic control lever will raise.
2. Turn the dial in the "DOWN" direction, and the bottom limit of the hydraulic control lever will lower.

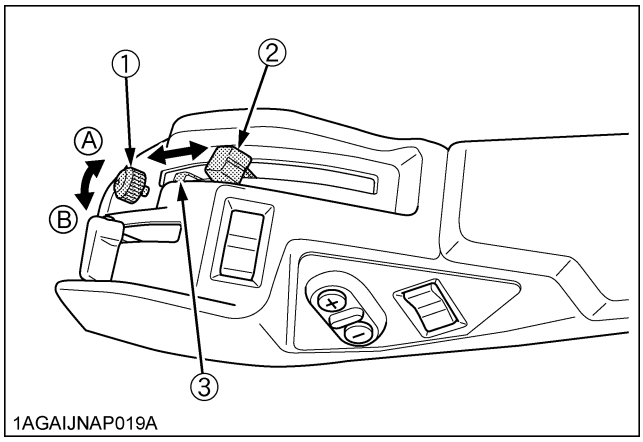

(1) Bottom limit control dial *(A) "UP"*
(2) Hydraulic control lever *(B) "DOWN"*
(3) Bottom limit

■Lift Arm Top Limit Adjustment Dial

This dial is used to change the top limit of the 3-point hitch.

1. Turn the dial in the "HIGH" direction, and the top limit of the 3-point hitch will raise.
2. Turn the dial in the "LOW" direction, and the top limit of the 3-point hitch will lower.

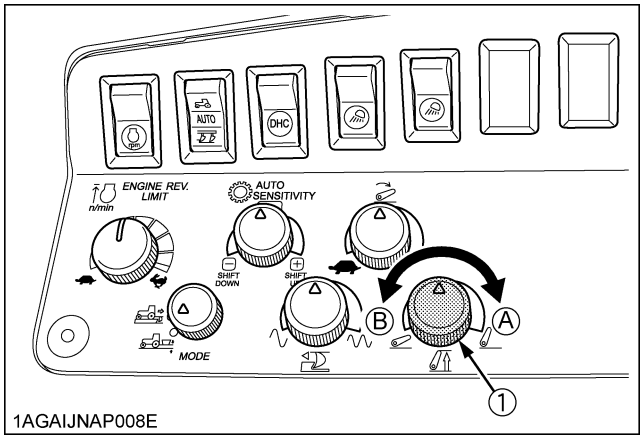

(1) Lift arm top limit adjustment dial *(A) "HIGH"*
(B) "LOW"

NOTE :

- Utilizing the lift arm top limit adjustment dial, the 3-P. Lifting / Lowering switch and the hydraulic control lever can be used to adjust the top limit to any level.

■3-Point Hitch Lowering Speed Adjustment Dial

WARNING

To avoid personal injury or death:

- **Fast lowering speed may cause damage or injury. Lowering speed of implement should be adjusted to 2 or more seconds.**

This dial is used to change the 3-point hitch's lowering speed.

1. Turn the dial in the "FAST" direction, and the 3-point hitch's lowering speed will increase.
2. Turn the dial in the "SLOW" direction, and the 3-point hitch's lowering speed will decrease.

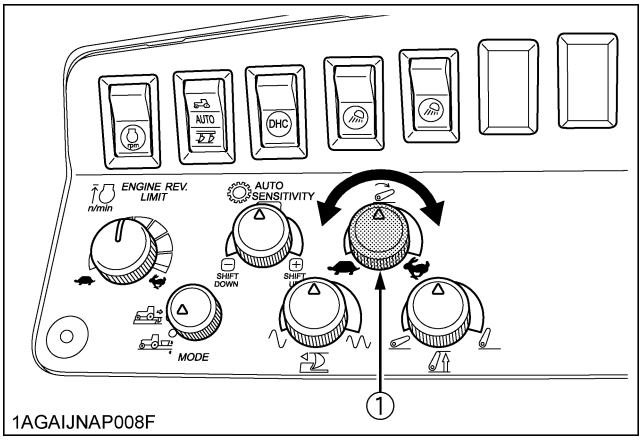

(1) 3-point hitch lowering speed adjustment dial *"FAST"*
"SLOW"

NOTE :

- This dial is not operative for complete hydraulic lock. For traveling or for checking an implement, set the 3-point hitch lowering lock lever in the "LOCK" position.

https://truckmanualshub.com/

■3-Point Hitch Lowering Lock Lever

WARNING

To avoid personal injury or death:

- **Before checking 3-point mounted implement, be sure to lock the implement with the lock lever. In such case, move the hydraulic control lever to the "DOWN" position and make sure the implement does not drop.**

This lever has 2 positions "LOCK" and "UNLOCK". Do not hold the half way position. When traveling or checking with the implement raised, set the lever to the "LOCK" position.

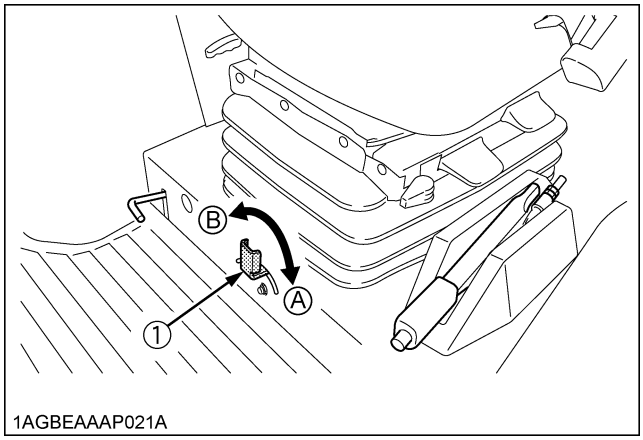

(1) 3-point hitch lowering lock lever *(A) "LOCK"* *(B) "UNLOCK"*

NOTE :

- To adjust the implement lowering speed, use the 3-point hitch lowering speed adjustment dial.

■3-P. Quick Raise / Lower Switch

WARNING

To avoid personal injury or death:

- **Before road traveling, be sure to set the hydraulic control lever and the 3-point hitch lowering lock lever to the "TRAVEL LOCK" and "LOCK" positions, respectively.**
- **Do not use the 3-P. Quick Raise / Lower switch on road traveling.**
- **When an implement is changed, do not use the 3-P. Quick Raise / Lower switch before checking the full range of operation for interference using the hydraulic control lever.**

These switches are used to raise and lower the implement. This facilitates turning in the field.

Press the "RAISE" switch, the 3-P. Lifting / Lowering indicator turns on and the implement goes up. Press the "LOWER" switch, the indicator goes off and the implement comes down.

When the "RAISE" switch has been pressed to raise the implement, the hydraulic control lever can not work.

To use the hydraulic control lever, first pull it up to the top position.

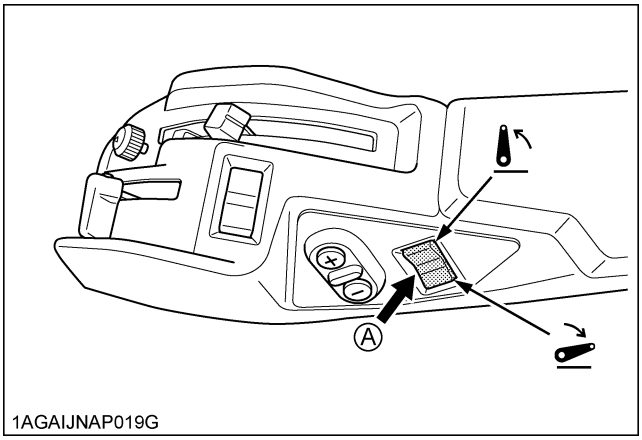

3-P. Quick raise switch *(A) "PUSH"*
3-P. Quick lower switch

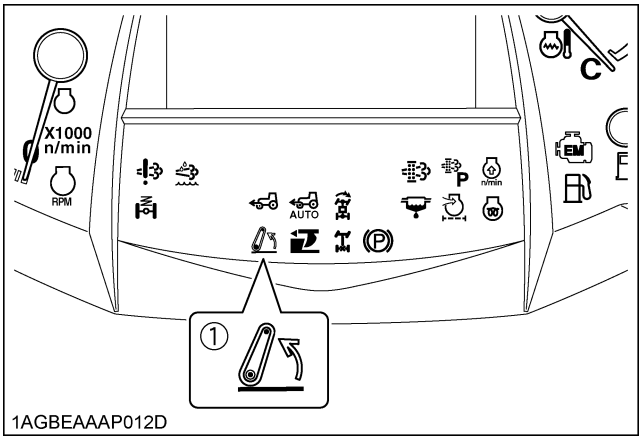

(1) 3-P. Lifting / Lowering Indicator

NOTE :

1. 3-point hitch working range
   Set the hydraulic control lever for a bottom limit and the lift arm top limit adjustment dial for a top limit. The 3-P. Quick Raise / Lower switches are controls for the raising and lowering within the limits set by the hydraulic control lever and the lift arm top limit adjustment dial.

https://truckmanualshub.com/

2. One-touch floating function
   Set the mode selector switch to the "DRAFT" position. Hold down the "LOWER" switch to keep the 3-point hitch floating. This function is helpful in plowing, for example. Release the switch and the 3-point hitch returns to the draft control position.
3. "RAISE" and "LOWER" operation with the 3-point hitch going halfway
   (1) When the "LOWER" switch is pressed with the 3-point hitch going up halfway, the 3-point hitch stops at this position. (The indicator turns on.) Re-push the "RAISE" or "LOWER" switch, and the 3-point hitch will go up or down respectively.
   (2) To lower the 3-point hitch with the 3-point hitch going up halfway, hold down the "LOWER" switch for 2 seconds or push it twice.
   (3) When the "RAISE" switch is pressed with the 3-point hitch going down halfway, the 3-point hitch goes up.

■3-Point Hitch's Position Lock

◆ **Position Lock**

If any of the following actions are made with the hydraulic control lever and the lower links at different heights, the position lock is activated. The 3-point hitch control is interrupted and the 3-P. Lifting / Lowering indicator starts flashing (2 or so flashes every second).

1. Starting the engine.
2. Activating the 3-P. Remote hitch Up / Down switch.
3. Changing the mode selector switch.

◆ **Releasing the position lock**

If applied, press the 3-P. Quick Raise switch or 3-P. Quick Lower switch.

NOTE :

- When the position lock is released with the 3-P. Quick Raise / Lower switches, the 3-point hitch goes up or down.

REMOTE HYDRAULIC CONTROL SYSTEM

The hydraulic auxiliary control valves can be installed up to quartet segments.

■Remote Control Valve

There are 2 types of remote valves available for these models.

- Double acting valve with detents and self cancelling:
  This valve may be placed in the detent mode. The lever will stay in this position until the pressure reaches a predetermined level or a cylinder reaches the end of its stroke. Then it will automatically return to neutral
- Double acting valve with float position:
  This valve may be placed in the float mode with the control lever all the way forward. The cylinder is free to extend or retract, letting an implement such as a loader bucket follow the ground.

■Remote Control Valve Lever

The remote control valve lever directs pressurized oil flow to the implement hydraulic system.

[Example: Installing double segment valves]

1st	Double acting valve with float position (standard)
2nd	Double acting valve with detents and self cancelling (standard)

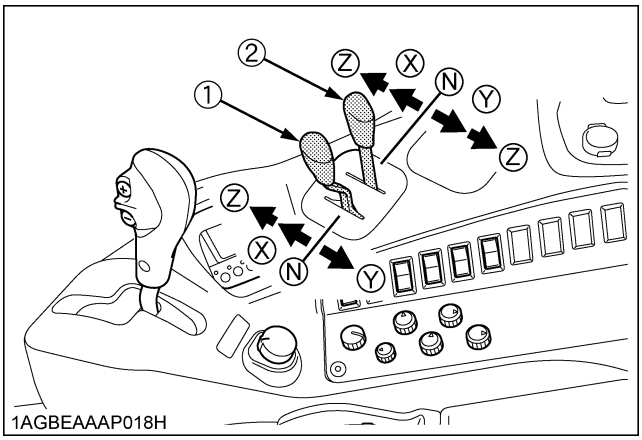

(1) Remote control valve lever 1
(2) Remote control valve lever 2

https://truckmanualshub.com/

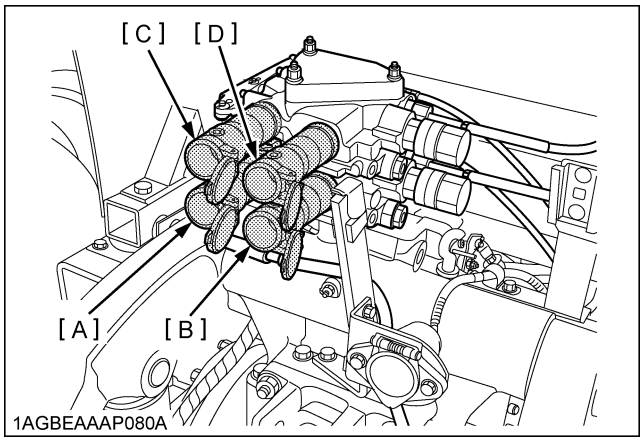

Pressure →
Returning ←

Lever (1)		Lever position			
		Z (detent)		X	Y
Port	(A)	in	Float	in ←	out →
	(B)	out		out →	in ←

Lever (2)		Lever position			
		Z(detent)	X	Y	Z(detent)
Port	(C)	in ←		out →	
	(D)	out →		in ←	

IMPORTANT :
- Do not hold the lever in the "pull" or "push" position once the remote cylinder has reached the end of the stroke, as this will cause oil to flow through the relief valve. Forcing oil through the relief valve for extended periods will overheat the oil.
- When using the tractor hydraulic system to power front loader, do not operate boom and bucket cylinders simultaneously.

NOTE :
- Connect the pressure of load side of implement cylinders to ports (A) or (C) which have built in load check valve to prevent leak down.
- To use the single-acting cylinder with the float valve, connect this cylinder to the (A) port.
  To extend a single-acting cylinder, pull the remote control valve lever downward. To retract a cylinder, push it fully upward to the "FLOAT" position. Do not hold it in the push position, the transmission fluid may be overheat.

■Remote Control Valve Coupler Connecting and Disconnecting

WARNING

To avoid personal injury or death:
- **Stop the engine and relieve pressure before connecting or disconnecting lines.**
- **Do not use your hand to check for leaks.**

◆ **Connecting**
1. Clean both couplers.
2. Remove dust plugs.
3. Insert the implement coupler to the tractor hydraulic coupler.
4. Pull the implement coupler slightly to make sure couplers are firmly connected.

◆ **Disconnecting**
1. Lower the implement first to the ground to release hydraulic pressure in the hoses.
2. Clean the couplers.
3. Relieve pressure by moving hydraulic control levers with engine shut off. Pull the hose straight from the hydraulic coupler to release it.
4. Clean oil and dust from the coupler, then replace the dust plugs.

NOTE :
- Your local KUBOTA Dealer can supply parts to adapt couplers to hydraulic hoses.

https://truckmanualshub.com/

■Adjusting the flow rate

WARNING

To avoid the possibility of personal injury or death be aware of the following when making adjustments:

- **The 3-point hitch operation is influenced by the combination of the adjustment of the flow control valve and the engine speed.**
- **The 3-point hitch may rise slowly or not at all at low engine rpm.**
- **The 3-point hitch may rise suddenly if engine rpm is increased, or, flow control adjustment is changed.**

◆ Flow control

The remote control valve with flow control may be added for the following purposes.

1. The attachments that are connected with the auxiliary control valve can be independently adjusted for flow rate.
2. To operate within limits, the remote control valves (1) and/or (2) and the 3-point hitch at the same time without one affecting the other.
3. To maintain within limits, the constant speed of an attachment (hydraulic motor RPM, for example) when connected to the remote control valves (1) and/or (2).

NOTE :

- At slower engine speeds the total hydraulic flow rate may be inadequate for simultaneous operation of the remote control valves (1) and/or (2) and the 3-point hitch, or operation of an attachment connected to the remote control valves (1)(2). Under these conditions, the engine speed must be increased to provide additional hydraulic flow.

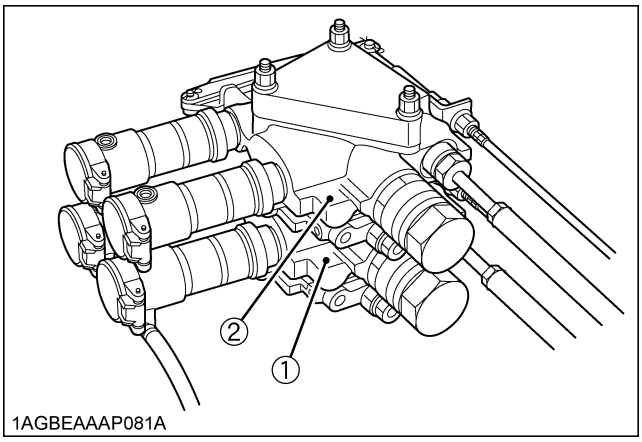

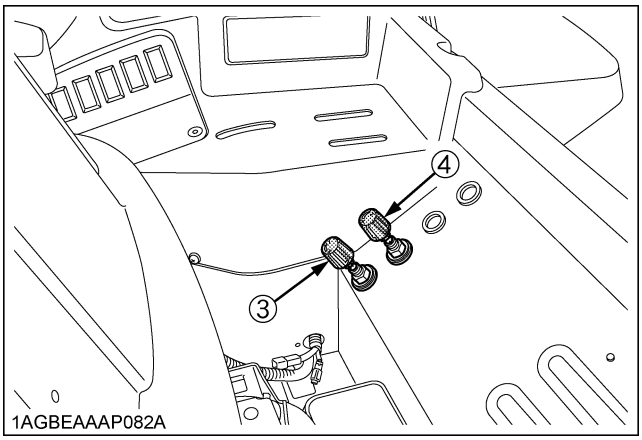

(1) Remote control valve with flow control
(2) Remote control valve with flow control
(3) Flow control knob for valve (1)
(4) Flow control knob for valve (2)

https://truckmanualshub.com/

◆ **Adjusting the flow rate**

1. The flow rate for the remote control valves (1) and (2) can be adjusted.
2. Turn the flow control knobs (3) and/or (4) counterclockwise (A), and the flow rate for the remote control valves (1) and/or (2) increases. A clockwise turn (B) of the knob causes the flow to decrease. If the knob is turned all the way (C), there will be no flow.
3. To adjust the flow rate, set the engine speed to the operating RPM, turn the flow control knob once all the way clockwise (C), and then turn it gradually counterclockwise until a required flow rate is reached.

NOTE :

- Oil from the pump flows by priority to the auxiliary control valve. Surplus oil is fed to the 3-point hitch. With the auxiliary control valve at neutral, the total flow from the pump is fed to the 3-point hitch.

IMPORTANT :

- When there is no need to adjust the flow rate, turn the flow control knob all the way counterclockwise and keep it in this position.

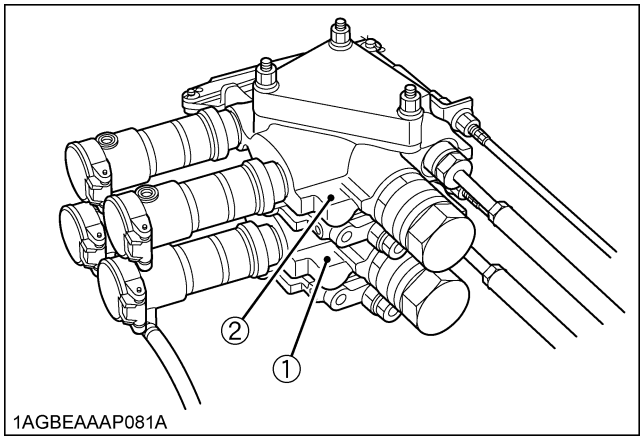

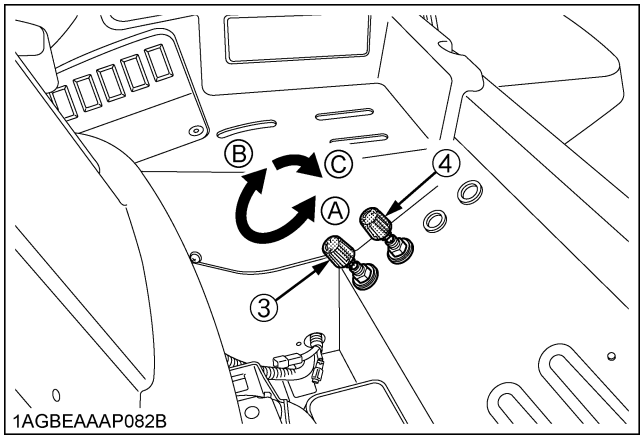

(1) Remote control valve with flow control
(2) Remote control valve with flow control
(3) Flow control knob for valve (1)
(4) Flow control knob for valve (2)
(A) "INCREASE"
(B) "DECREASE"
(C) "STOP"

■Remote Couplers Spillage Collector

With the remote control valve coupler in place, a slight amount of oil leaking from the coupler is recovered. In this way, no oil is splashed around the tractor body.

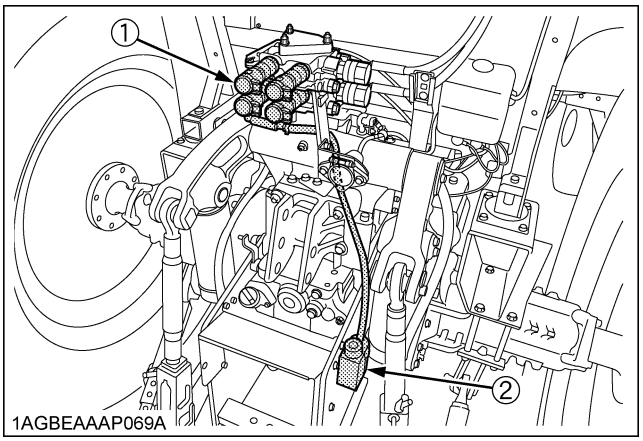

(1) Collector cap
(2) Oil tank

IMPORTANT :

- Oil recovered contains dust and water. Do not pour such oil back into the transmission case.

https://truckmanualshub.com/

■Hydraulic Control Unit Use Reference Chart

In order to handle the hydraulics properly, the operator must be familiar with the following.
Though this information may not be applicable to all types of implements and soil conditions, it is useful for general conditions.

Implement	1AGAIAZAP122A Soil condition	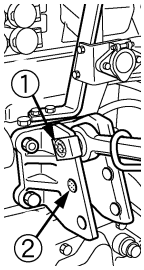 1AGAIJNAP066B Top link mounting holes	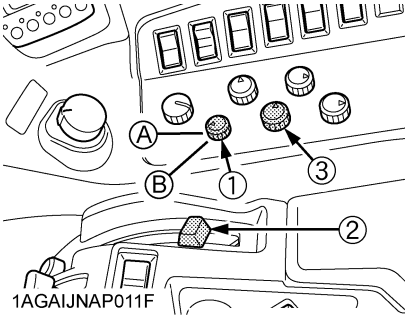 1AGAIJNAP011F (1) Mode selector switch	(2) Hydraulic control lever	(3) Draft ratio adjustment dial	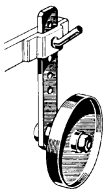 1AGAIAZAP070A Gauge wheel	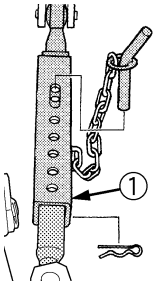 1AGAIJNAP070B (1) Telescopic stabilizers	Remarks
Moldboard plow	Light soil Medium soil Heavy soil	2	Draft Control (A)	Mixed draft control Place the hydraulic control lever to the suitable position.	Turn the dial to the suitable position	YES/NO	Loose	Insert the telescopic stabilizer set-pin through the slot on the outer tube that align with one of the holes on the inner bar.
Disc plow	---							
Harrower (spike, springtooth, disc type)	---							
Sub-soiler.....								
Weeder, ridger.....	---	1	Position control (B)	Position Control Place the hydraulic control lever to the suitable position.	---	YES	Tighten	Telescopic stabilizer should be tight enough to prevent excessive implement movement when implement is in raised position. For implements with gauge wheels, lower the position control lever all way.
Earthmover, digger, scraper, manure fork, rear carrier.....						YES/NO		
Mower (mid- and rear-mount type) Hayrake, tedder.....						NO		

NOTE :

- With an implement mounted, use the top hole of the top link holder to keep the implement as horizontal as possible, and its center hole to keep the implement tilted forward. Only if the implement is not well matched, the lower hole may be used.

https://truckmanualshub.com/

TIRES, WHEELS AND BALLAST

TIRES

WARNING

To avoid personal injury or death:

- **Do not attempt to mount a tire on a rim. This should be done by a qualified person with the proper equipment.**
- **Always maintain the correct tire pressure. Do not inflate tires above the recommended pressure shown in the operator's manual.**

IMPORTANT :

- Do not use tires other than those approved by KUBOTA.

NOTE :

- When optional different-diameter tires are fitted on the machine, the travel speed display mode must be changed. Otherwise the travel speed will not get correctly displayed. Such mode switching is also needed when the original tires are back on the machine.
  (See "SIDE DIGITAL DISPLAY" in "OPERATING THE TRACTOR" section.)

■Inflation Pressure

Though the tire pressure is factory-set to the prescribed level, it naturally drops slowly in the course of time. Thus, check it everyday and inflate as necessary.

NOTE :

- Maintain the maximum pressure in front tires, if using a front loader or when equipped with a full load of front weights.

	Tire sizes	Inflation Pressure
Front	12.4-24, 6PR	170 k Pa (1.7 kgf/cm^2, 24 psi.)
	12.4R24	160 k Pa (1.6 kgf/cm^2, 23 psi.)
	13.6R24, 6PR	160 k Pa (1.6 kgf/cm^2, 23 psi.)
	13.6-24, 6PR	150 kPa (1.5 kgf/cm^2, 22 psi.)
	14.9R24, 6PR	140 kPa (1.4 kgf/cm^2, 20 psi.)
	420/70R24	140 kPa (1.4 kgf/cm^2, 20 psi.)
Rear	18.4R30	140 kPa (1.4 kgf/cm^2, 20 psi.)
	16.9-34, 6PR	120 kPa (1.2 kgf/cm^2, 18 psi.)
	18.4-34, 8PR	140 kPa (1.4 kgf/cm^2, 20 psi.)
	18.4R34	120 kPa (1.2 kgf/cm^2, 18 psi.)
	16.9-38, 6PR	120 kPa (1.2 kgf/cm^2, 18 psi.)
	18.4R38	120 kPa (1.2 kgf/cm^2, 18 psi.)
	520/70R38	120 kPa (1.2 kgf/cm^2, 18 psi.)

■Dual Tires

Dual tires are not approved.

https://truckmanualshub.com/

WHEEL ADJUSTMENT

WARNING

To avoid personal injury or death:

- **When working on slopes or when working with trailer, set the wheel tread as wide as practical for maximum stability.**
- **Support tractor securely on stands before removing a wheel.**
- **Do not work under any hydraulically supported devices. They can settle, suddenly leak down, or be accidentally lowered. If necessary to work under tractor or any machine elements for servicing or adjustment, securely support them with stands or suitable blocking beforehand.**
- **Never operate tractor with a loose rim, wheel, or axle.**

■Front Wheels (with 4-wheel drive)

Front tread width can be adjusted as shown with the standard equipped tires.

To change the tread width

1. Remove the wheel rim and disk mounting bolts.
2. Change the position of the rim and tire to the desired position, and tighten the bolts.
3. Adjust the toe-in [2 to 8mm (0.1 to 0.3 in.)]
   See "Adjusting Toe-in" in "EVERY 200 HOURS" in "PERIODIC SERVICE" section.

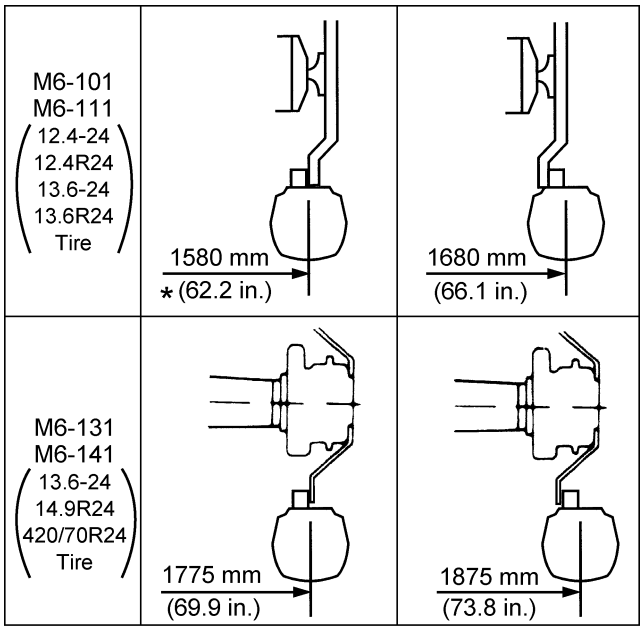

1AGAIEDAP016I

*: Need to limit turning angle at 1580 mm (62.2 in.) width setting to 42 degrees. Refer to the chart provided for additional instructions.

IMPORTANT :

- Always attach wheels as shown in the drawing.
- If not attached as illustrated, transmission parts may be damaged.
- When re-fitting or adjusting a wheel, tighten the bolts to the following torques then recheck after driving the tractor 200m (200 yards) and 10 times of shuttle movement by 5 m (5 yards), and thereafter according to service interval. (See "MAINTENANCE" section.)

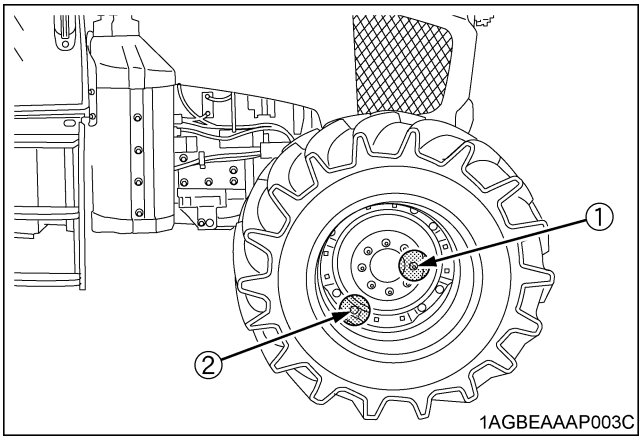

(1) 260 to 304 N-m (26.5 to 31 kgf-m) (192 to 224 ft-lbs)
(2) [Waffle wheel]
298 to 366 N-m (30.4 to 37.3 kgf-m) (220 to 270 ft-lbs)

NOTE :

- Wheels with beveled or tapered holes: Use the tapered side of lug nut.

WARNING

To avoid personal injury or death:

- **Before jacking up the tractor, park it on a firm and level ground and chock the rear wheels.**
- **Fix the front axle to keep it from pivoting.**
- **Select jacks that withstand the machine weight and set them up as shown below.**

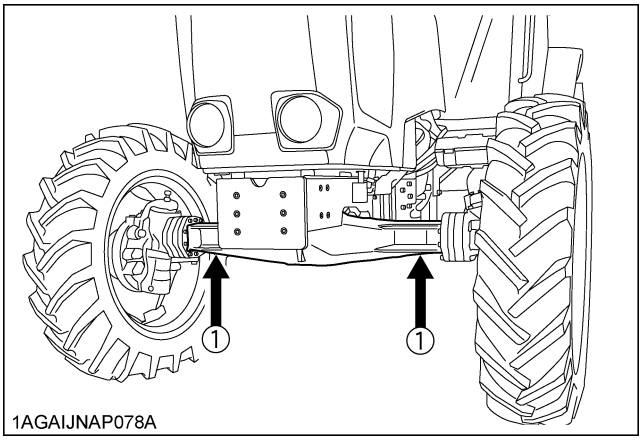

(1) Jack points

https://truckmanualshub.com/

■Adjusting Front Wheel Turning Stopper Bolt

[M6-101, M6-111]

◆ **Adjusting procedure**

1. Adjust the right and left front stoppers according to the front wheel turning angle.
2. Adjusting the rear stoppers:
   (1) Turn the steering wheel fully clockwise until the left front stopper comes into the case. Adjust the right rear stopper so that there is a clearance of about 1 mm (0.04 in.) between the right rear stopper and the case.
   (2) Turn the steering wheel counterclockwise to readjust the left rear stopper.

[M6-131, M6-141]

◆ **Adjusting procedure**

1. Adjust the right and left rear stoppers according to the front wheel turning angle.
2. Adjusting the front stoppers:
   (1) Turn the steering wheel fully clockwise until the right rear stopper comes into the case. Adjust the front stopper so that there is a clearance of about 1 mm (0.04 in.) between the left front stopper and the case.
   (2) Turn the steering wheel counterclockwise to readjust the right front stopper.

IMPORTANT :

- Always check if tires contact with tractor or loader frame assemblies.
- Adjust turning angle with provided stoppers if necessary.
- Bi-speed will not activate if turning angle is less than 34 degree.

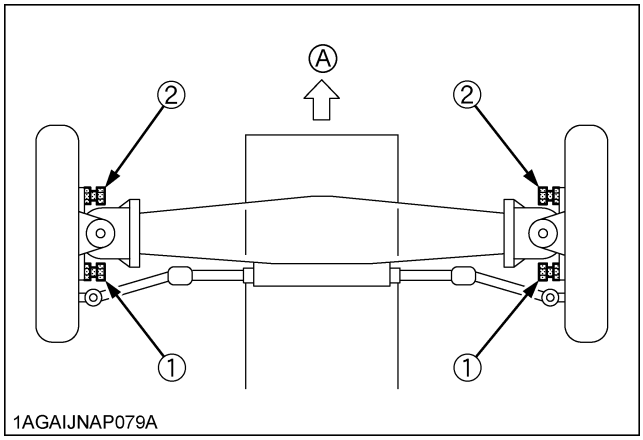

(1) Rear stopper bolts *(A) "FRONT"*
(2) Front stopper bolts

M6-101 M6-111	FRONT stopper bolts (ex. LH stopper bolt)		
Angle	50°	45°	42°
Stopper	9mm (Factory setting)		A
Angle	37°	33°	30°
Stopper		A	A

M6-131 M6-141	REAR stopper bolts (ex. LH stopper bolt)		
Angle	50°	48°	45°
Stopper	D B (Factory setting)	D C	C B D (Factory setting Front suspension type)
Angle	40°	37°	
Stopper	C	C B	1AGBEAAAP023A

(A) 5 mm (0.2 in.) collar
(B) 7 mm (0.3 in.) collar
(C) 12.5 mm (0.5 in.) collar
(D) 1 mm (0.04 in.) shim

https://truckmanualshub.com/

■Rear Wheels

Rear tread width can be adjusted as shown with the standard equipped tires.

To change the tread width

1. Remove the wheel rim and / or disk mounting bolts.
2. Change the position of the rim and / or disk (right and left) to the desired position, and tighten the bolts.

IMPORTANT :

- Always attach wheels as shown in the drawing.
- If not attached as illustrated, transmission parts may be damaged.
- When re-fitting or adjusting a wheel, tighten the bolts to the following torques then recheck after driving the tractor 200m (200 yards) and 10 times of shuttle movement by 5 m (5 yards), and thereafter according to service interval. (See "MAINTENANCE" section.)

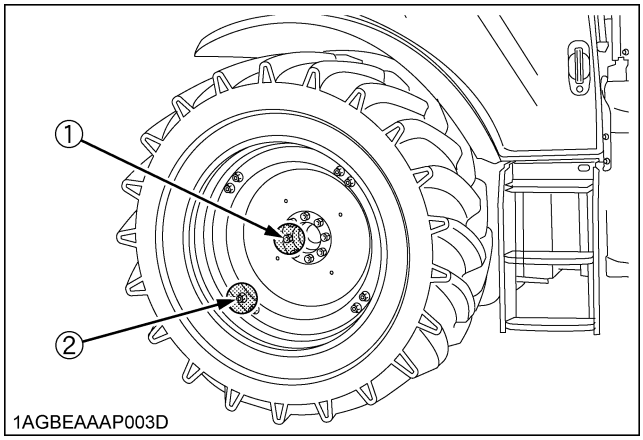

N-m (kgf-m) [ft-lbs]

(1)	(2)	
	Steel disk	Cast iron disk
343 to 401 (35.0 to 41.0) [254 to 297]	244 (24.9) [180]	305 to 325 (31.1 to 33.2) [225 to 240]

https://truckmanualshub.com/

[Steel disc]

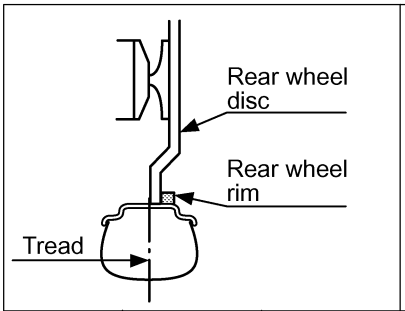			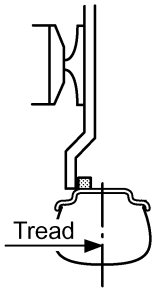	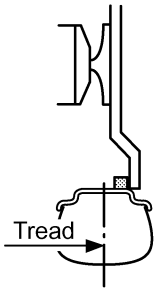	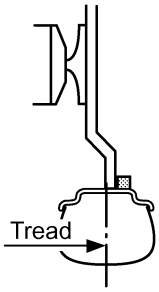	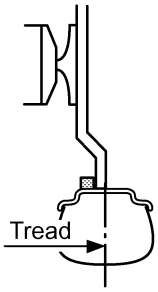	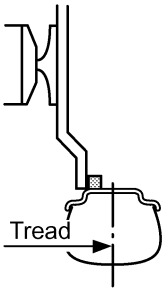
M6-101 M6-111	16.9-34 18.4-34 18.4R34	1500 mm (59.0 in.)	1600 mm (63.0 in.)	1710 mm (67.3 in.)	1900 mm (74.8 in.)	1810 mm (71.3 in.)	2010 mm (79.1 in.)

[Cast iron disc]

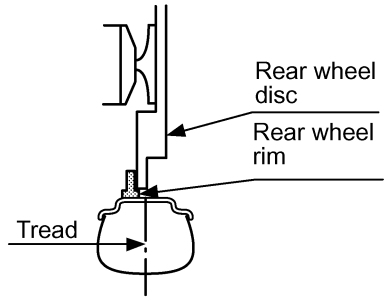			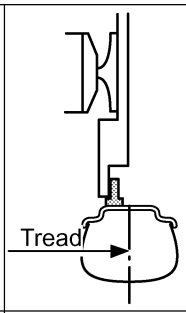	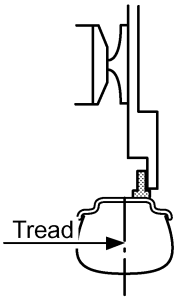	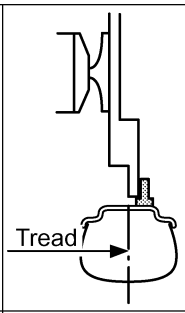	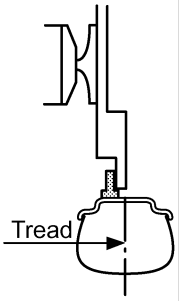	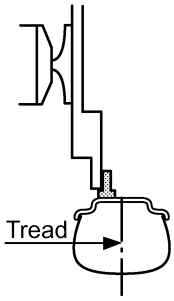
M6-101 M6-111	18.4R30	1520 mm (59.8 in.)	1630 mm (64.2 in.)	1710 mm (67.3 in.)	1810 mm (71.3 in.)	1960 mm (77.2 in.)	2060 mm (81.1 in.)
	16.9-34 18.4-34 18.4R34	1530 mm (60.2 in.)	1630 mm (64.2 in.)	1730 mm (68.1 in.)	1840 mm (72.4 in.)	1930 mm (76.0 in.)	2040 mm (80.3 in.)
M6-131 M6-141	16.9-38	1590 mm (62.6 in.)	1690 mm (66.5 in.)	1780 mm (70.1 in.)	1880 mm (74.0 in.)	1980 mm (80.0 in.)	2090 mm (82.3 in.)
	18.4R38	1590 mm (62.6 in.)	1710 mm (67.3 in.)	1760 mm (69.3 in.)	1880 mm (74.0 in.)	1970 mm (77.6 in.)	2090 mm (82.3 in.)
	520/70R38	---					

1AGBEAAAP022A

https://truckmanualshub.com/

WARNING

To avoid personal injury or death:

- **Before jacking up the tractor, park it on a firm and level ground and chock the front wheels.**
- **Fix the front axle to keep it from swinging.**
- **Select a jack that withstands the machine weight and set it up as shown below.**

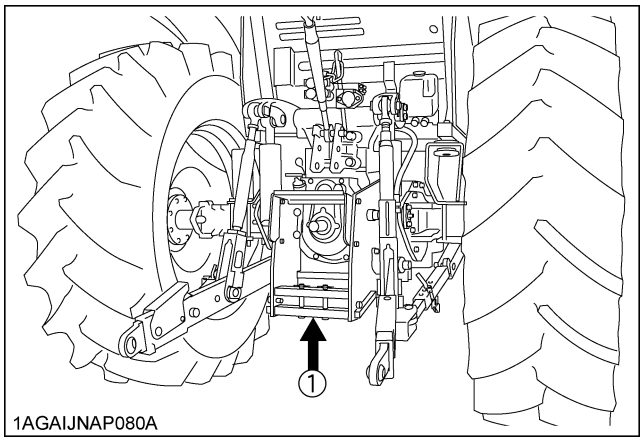

(1) Jack point

BALLAST

WARNING

To avoid personal injury or death:

- **Additional ballast will be needed for transporting heavy implements. When the implement is raised, drive slowly over rough ground, regardless of how much ballast is used.**
- **Do not fill the front wheels with liquid to maintain steering control.**

■Front Ballast

Add weights if needed for stability and improve traction. Heavy pulling and heavy rear mounted implements tend to lift front wheels.

Add enough ballast to maintain steering control and prevent tip over. Remove weight when no longer needed.

◆ Front End Weights (option)

The front end weights can be attached to the bumper.

See your implement operator's manual for required number of weights or consult your local KUBOTA Dealer to use.

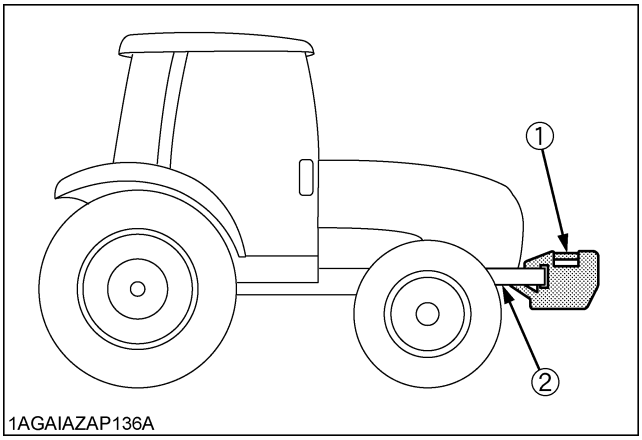

(1) Front end weights
(2) Bumper

IMPORTANT :

- Do not overload tires.
- Add no more weight than indicated in chart.

Maximum weight	47 kg x 12 pieces (1240 lbs.)

https://truckmanualshub.com/

■Rear Ballast

Add weight to rear wheels if needed to improve traction or for stability. The amount of rear ballast should be matched to job and the ballast should be removed when it is not needed.
The weight should be added to the tractor in the form of liquid ballast, rear wheel weights or a combination of both.

◆ Rear Wheel Weights (option)

The rear wheel weights can be attached to the rear wheel. See your implement operator's manual for required number of weights or consult your local KUBOTA Dealer to use.

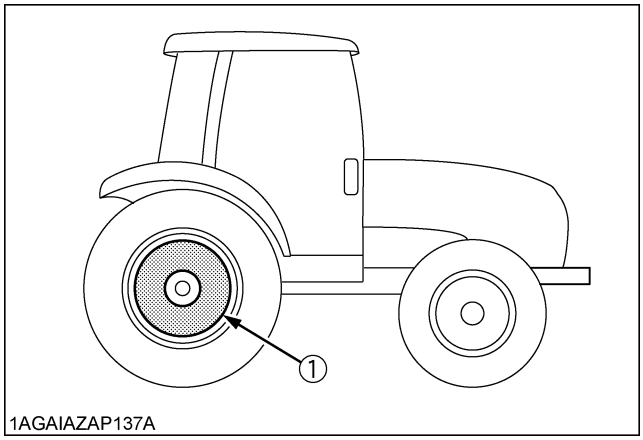

(1) Rear wheel weights

IMPORTANT :
- Do not overload tires.
- Add no more weight than indicated in chart.

Maximum weight per wheel	[Cast iron disk] 72.5 kg x 2 pieces (320 lbs.)
	[Steel disk] 72.5 kg x 3 pieces (480 lbs.)

◆ Liquid Ballast in Rear Tires

Water and calcium chloride solution provides safe economical ballast. Used properly, it will not damage tires, tubes or rims. The addition of calcium chloride is recommended to prevent the water from freezing. Use of this method of weighting the wheels has the full approval of the tire companies. See your tire dealer for this service.

Liquid weight per tire (75 Percent filled)

Tire sizes	16.9-34	18.4R30 18.4-30	18.4R34	18.4R38 520/70R38
Slush free at -10 ℃ (-14 ℉) Solid at -30 ℃ (-22 ℉) [Approx.1 kg (2 lbs.) $CaCl_2$ per 4 L (1 gal.) of water]	342 kg (755 lbs.)	385 kg (848 lbs.)	417 kg (920 lbs.)	460 kg (1013 lbs.)
Slush free at -24 ℃ (-11 ℉) Solid at -47 ℃ (-53 ℉) [Approx.1.5 kg (3.5 lbs.) $CaCl_2$ per 4 L (1 gal.) of water]	376 kg (829 lbs.)	414 kg (912 lbs.)	457 kg (1007 lbs.)	505 kg (1113 lbs.)
Slush free at -47 ℃ (-53 ℉) Solid at -52 ℃ (-62 ℉) [Approx.2.25 kg (5 lbs.) $CaCl_2$ per 4 L (1 gal.) of water]	399 kg (880 lbs.)	436 kg (960 lbs.)	490 kg (1081 lbs.)	538 kg (1187 lbs.)

IMPORTANT :
- Do not fill tires with water or solution more than 75% of full capacity (to the valve stem level).

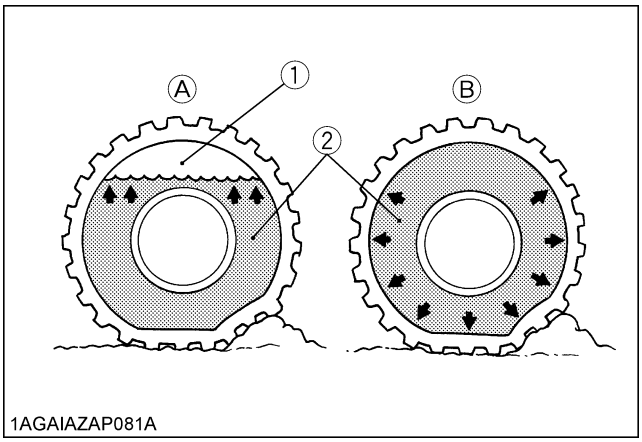

(1) Air (A) Correct-75% Air compresses like a cushion
(2) Water (B) Incorrect-100% Full Water can not be compressed

https://truckmanualshub.com/

CAB OPERATION

DOOR AND WINDOW

■Locking and Unlocking the Door

From the outside ..... Insert the key into the door lock. Turn the key clockwise to unlock the door. To lock the door, turn the key in the opposite direction. The key can be removed when it is in the vertical direction.

From the inside ..... Push down the lock knob to lock the door.
Pull up the lock knob to unlock the door.

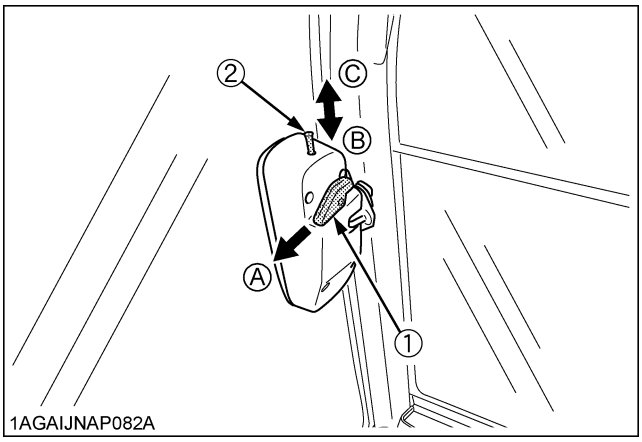

(1) Inner door handle
(2) Lock knob
(A) "PULL"
(B) "PUSH" (Lock)
(C) "PULL" (Unlock)

■Opening the Door

From the outside ..... Unlock the door, and pull the outer door handle.

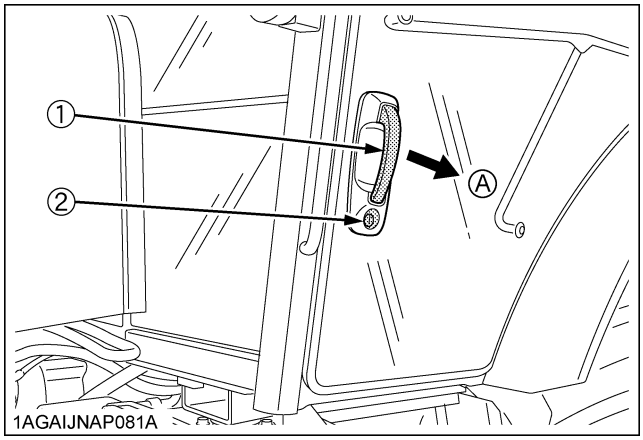

(1) Outer door handle
(2) Door lock
(A) "PULL"

From the inside ..... Unlock the door and pull the inner door handle.

■Rear Window

Turn the rear window handle clockwise to the vertical position and push the handle. The rear window is opened by the gas spring cylinder.

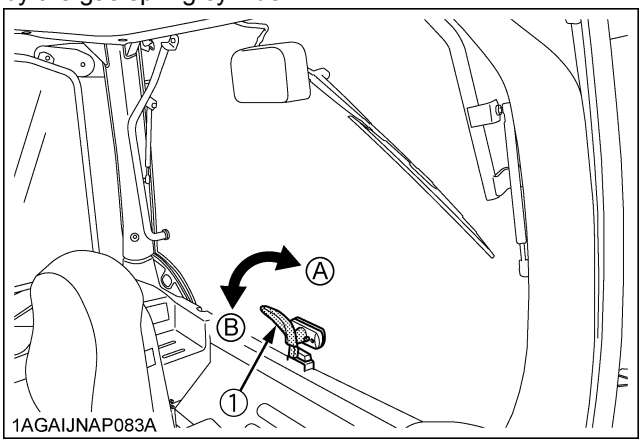

(1) Rear window handle
(A) "OPEN"
(B) "CLOSE"

https://truckmanualshub.com/

■Sun Roof

Raise the front loader, and visually check to see if the tip of an attachment (bucket and fork, for example) is visible in its position or angle from the operator's seat.

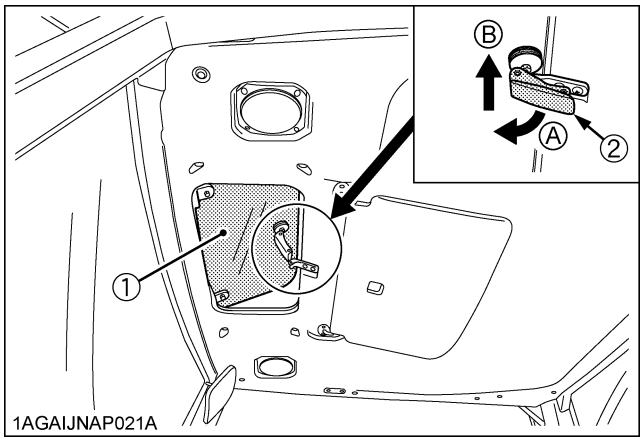

(1) Sun roof
(2) Sun roof handle
(A) "PULL"
(B) "PUSH" (Open)

NOTE :
- Open the sun roof, to allow outside air in.

■Emergency Exit

1. Open the right door of the cab if the left door is blocked, and vice versa in an emergency situation.
2. Exit through rear window if CAB doors are blocked in an emergency situation.

DOME LIGHT

■Dome Light

Sliding the dome light switch will give the following light condition:

OFF	The light does not turn on when the door is opened.
DOOR	The light turns on when the door (LH) is opened. It turns off when the door (LH) is closed.
ON	The light remains on regardless of the door position.

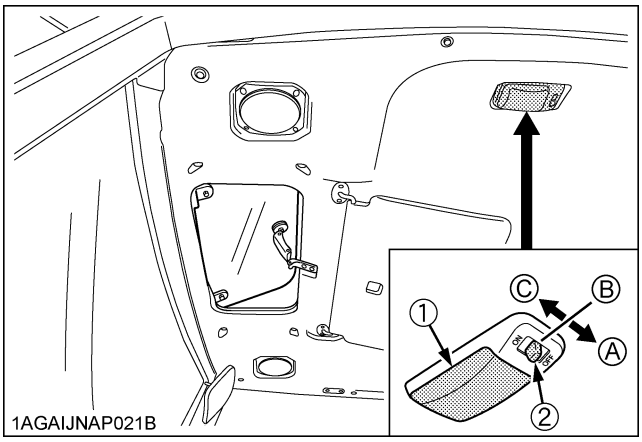

(1) Dome light
(2) Dome light switch
(A) "OFF"
(B) "DOOR"
(C) "ON"

IMPORTANT :
- The battery will discharge if the dome light remains on. Be sure to check the dome light switch position and/or door closure.

WIPER

■Front Wiper / Washer Switch

1. Turn on the key switch and press the right half of the wiper switch to the first step, the wiper is activated.
   When the switch is pressed further to the second step, washer liquid jets out.
   The jetting continues while the switch is pressed and the wiper is activated continuously.
2. Press the left half to the first step, the wiper is activated at regular intervals.
   When the switch is pressed further to the second step, washer liquid jets out and the wiper is activated at regular intervals.

https://truckmanualshub.com/

■Rear Wiper / Washer Switch

1. Turn on the key switch and press the right half of the wiper switch to the first step, the wiper is activated. When the switch is pressed further to the second step, washer liquid jets out.
   The jetting continues while the switch is pressed and the wiper is activated continuously.
2. Press the left half of the wiper / washer switch, washer liquid only jets out.

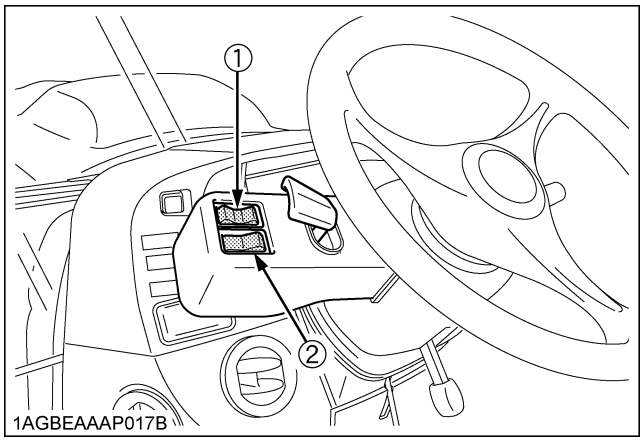

(1) Front wiper / washer switch
(2) Rear wiper / washer switch

IMPORTANT :

- Do not activate the wipers when the windows are dry, they may be scratched.
  Be sure to jet washer liquid first and then activate the wipers.

■Using the Wipers in Cold Season

1. While not used in cold season, keep the wiper blades off the windshield to prevent them from being stuck with ice.
2. If the windshield is covered with snow, scrape it off the windshield before using the wipers.
3. If the wiper blades are stuck on the windshield with ice and fail to move, be sure to turn the main key switch to "OFF" and remove the ice off the blades. Then place the main key switch back to "ON".
4. When commercially available cold-season wiper blades are used, make sure their size is the same as or smaller than that of the standard ones.

IMPORTANT :

- In cold season, the wiper blades and the wiper motor might get overloaded causing damage. To avoid this, be sure to take the above precautions.

AIR CONDITIONER

■Airflow

Air in the CAB and fresh air introduced into the CAB flow as shown below. Adjust the seven air ports to obtain the desired condition.

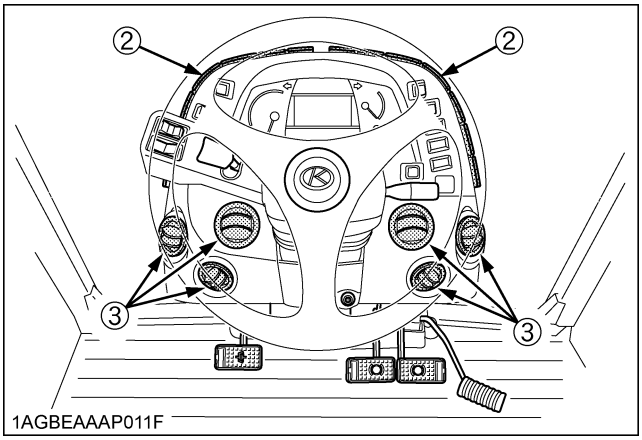

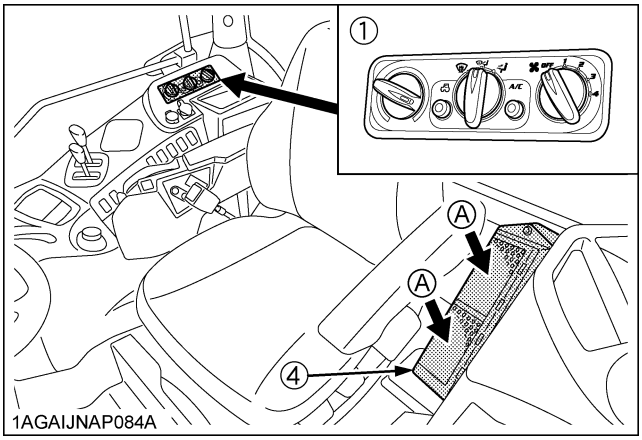

(1) Control panel
(2) Defroster air outlets
(3) Dashboard air outlets
(4) Inner air filter
(A) Inner air recirculation

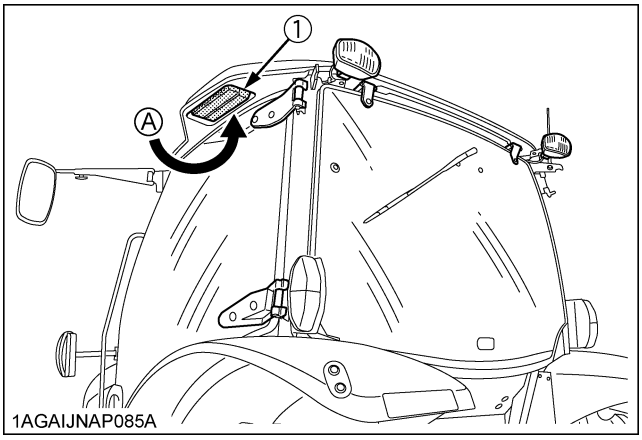

(1) Fresh air filter
(A) "FRESH AIR INLET"

https://truckmanualshub.com/

IMPORTANT :
- Do not pour water directly into the fresh air port while washing the vehicle.

■Air Control Vent

◆ **Dashboard air outlet**

The dashboard air outlets can be independently adjusted as required.

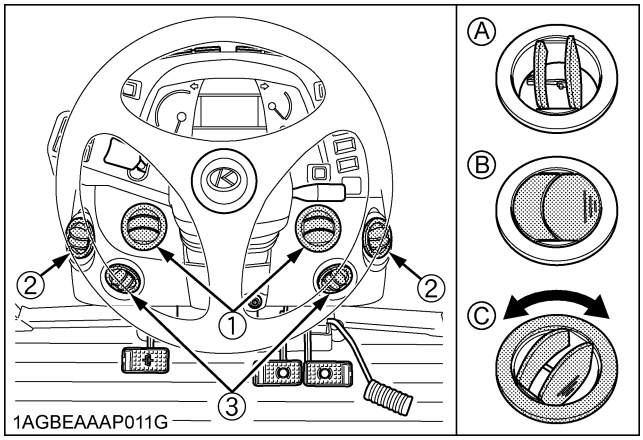

(1) Face area air outlets *(A) "OPEN"*
(2) Back area air outlets *(B) "SHUT"*
(3) Feet area air outlets *(C) "TURN"*

CAUTION

To avoid personal injury;
- **Replace the water hoses every 4 years.**
- **Daily inspection**
  Have the tractor repaired immediately if any of the following defects are discovered.
  (Such defects may cause burns or injury. They may also cause engine seizure or other serious failure.)
  - **Scratches, cracks or swelling in water hoses.**
  - **Water leakage at water hose joints.**
  - **Missing or damaged water hose protective wrap or grommets.**
  - **Loose mounting bolts, damaged brackets.**
- **Do not touch the water hoses and the heater with your hand. You may get burned.**
- **If the window fails to defrost in extreme conditions or becomes cloudy when dehumidifying the CAB, wipe off moisture with a soft cloth.**
- **Do not block all the air outlets of the air conditioner. A problem could occur.**

■Control Panel

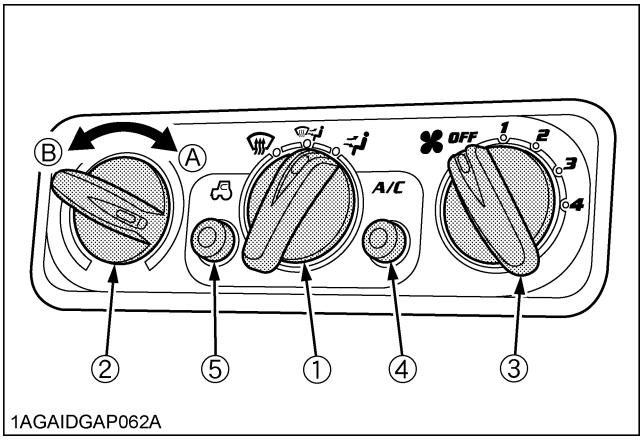

(1) Mode switch *(A) "WARM"*
(2) Temperature control dial *(B) "COOL"*
(3) Blower switch
(4) Air conditioner switch with indicator light
(5) Recirculation / fresh air selection switch with indicator light

◆ **Mode switch**

Set the mode switch to the desired position.

- Air is blown from only the dashboard air outlets.
- Air is blown from the dashboard and defroster air outlets.
- Air is blown from only the defroster air outlet.

◆ **Temperature Control Dial**

Set this dial at the desired position to obtain the optimum air temperature. Turn the dial in the "WARM" direction to obtain warmer air. Turn it in the "COOL" direction to obtain cooler air.

◆ **Blower Switch**

Air volume can be changed in 4 steps. At the "4" position, the largest air volume is obtained.

◆ **Air Conditioner Switch**

Push this switch to activate the air conditioner. An indicator light will light up when the switch is set to "ON". Push the switch again to turn the air conditioner off, in which case the indicator light will be off.

https://truckmanualshub.com/

◆ **Recirculation / fresh air selection switch**

Each time the switch is pressed, the air flow position changes for "RECIRCULATION" or "FRESH AIR". An indicator light will light up when the switch is set to "RECIRCULATION". And the indicator light will be off when the switch is set to "FRESH AIR".

FRESH AIR: (Indicator: OFF)	Fresh air will flow into the CAB. This is helpful when you work in dusty conditions or if the glass windows get foggy.
RECIRCULATION: (Indicator: ON)	In-CAB air will be recirculated. This is useful for cooling or heating the CAB quickly or keeping it extra cool or warm.

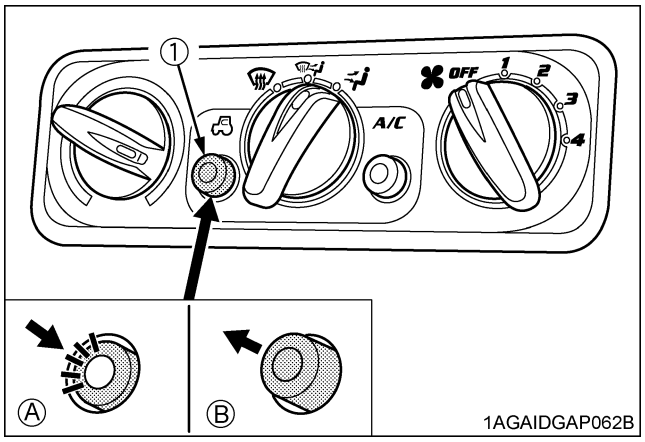

(1) Recirculation / fresh air selection switch with indicator light
(A) "RECIRCULATION"
(B) "FRESH AIR"

NOTE :

- When heating, do not keep the switch at the "RECIRCULATION" position for a long time. The windshield easily gets foggy.
- While working in a dusty conditions, keep the switch at the "FRESH AIR" position. This increases the pressure in the CAB, which helps prevent dust from coming into the CAB.

■Operation

◆ **Heating**

1. Set the mode switch to the position.
2. Set the recirculation / fresh air selection switch to the "FRESH AIR" position. To raise the temperature in the CAB quickly, set this switch to the "RECIRCULATION" position.
3. Adjust the blower (1/2/3/4) switch and the temperature control dial to achieve a comfortable temperature level.

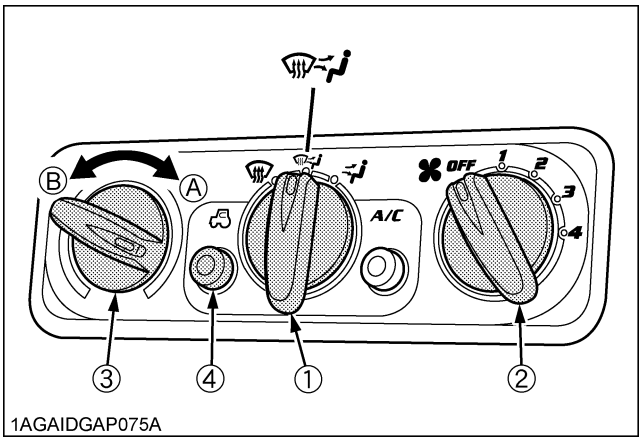

(1) Mode switch
(2) Blower switch
(3) Temperature control dial
(4) Recirculation / fresh air selection switch with indicator light
(A) "WARM"
(B) "COOL"

4. Adjust the air volume and air direction from the dashboard air outlets. In general, open Feet area air outlets, and shut Face / Back area air outlets.

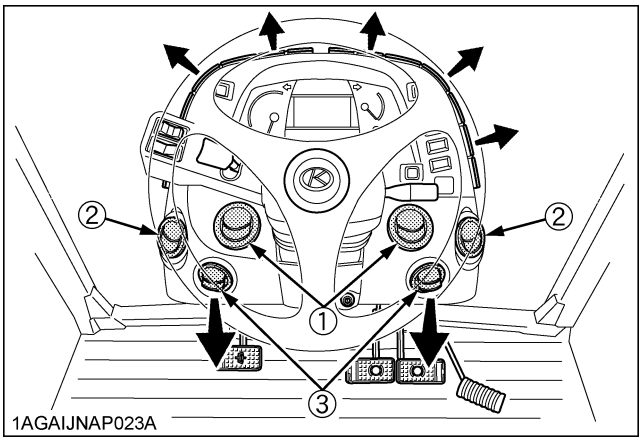

(1) Face area air outlets
(2) Back area air outlets
(3) Feet area air outlets

◆ **Cooling or dehumidifying-heating**

1. Set the mode switch to the position.
2. Set the recirculation / fresh air selection switch to the "FRESH AIR" position. To fall the temperature in the CAB quickly, set this switch to the "RECIRCULATION" position.
3. Press and turn on the air-conditioner switch with indicator.
4. Turn on the blower (1/2/3/4) switch.
5. Adjust the temperature control dial to the "COOL" or an intermediate position to achieve a comfortable temperature level.

https://truckmanualshub.com/

NOTE :
- In summer when the heater is not used, keep the temperature control dial at the max "COOL" (end of counterclockwise) position. Otherwise, hot air will raise the temperature in the CAB.

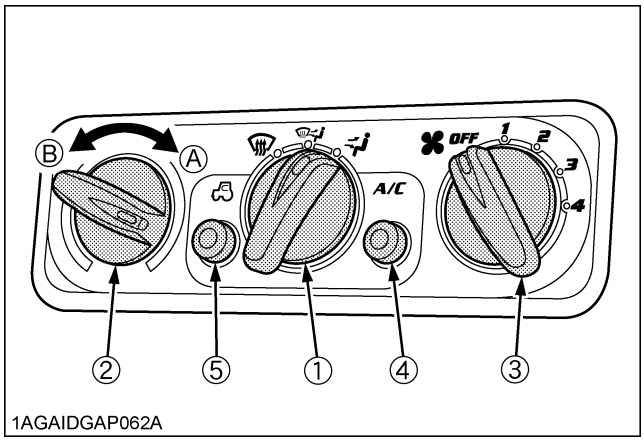

(1) Mode switch
(2) Temperature control dial
(3) Blower switch
(4) Air conditioner switch with indicator light
(5) Recirculation / fresh air selection switch with indicator light
(A) "WARM"
(B) "COOL"

6. Adjust the air volume and air direction from the dashboard air outlets. In general, the air volume from Face area air outlets is adjusted to increase, and the air volume from Feet / Back area air outlets is adjusted to decrease.

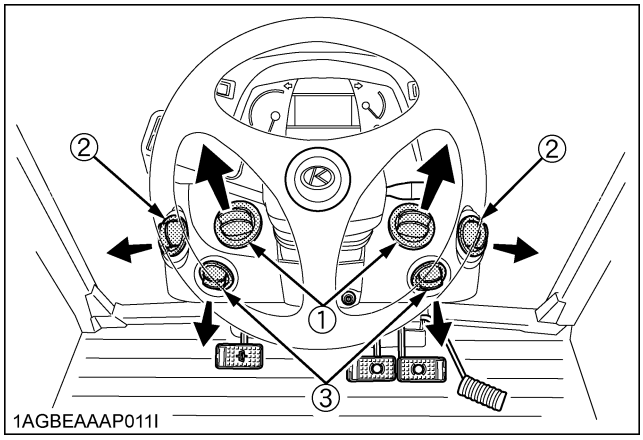

(1) Face area air outlets
(2) Back area air outlets
(3) Feet area air outlets

◆ **Defrosting or demisting**

To defrost or demist the windshield, take the following steps.

1. Set the mode switch to the position.
2. Set the recirculation / fresh air selection switch to the "FRESH AIR" position.
3. Set the blower switch and the temperature control dial to the "4" and max "WARM" (end of clockwise) positions, respectively.

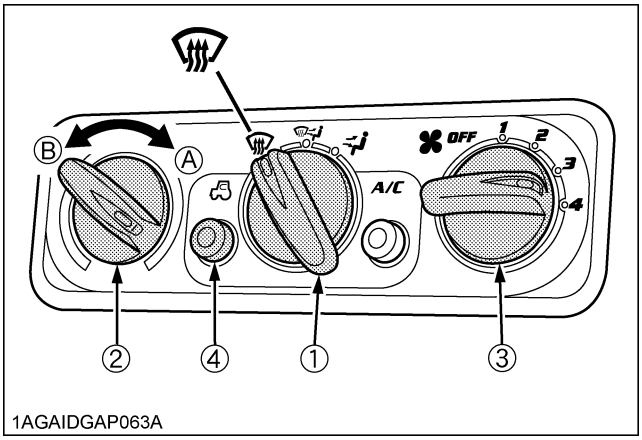

(1) Mode switch
(2) Temperature control dial
(3) Blower switch
(4) Recirculation / fresh air selection switch with indicator light
(A) "WARM"
(B) "COOL"

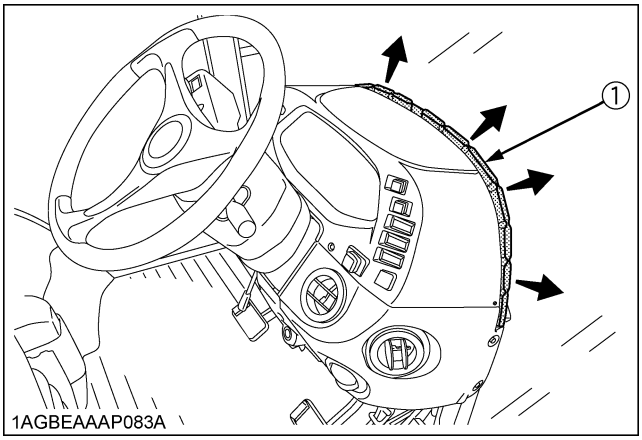

(1) Defroster air outlet

NOTE :
- If you set the mode switch to position, air will not come out from the dashboard air outlets.

https://truckmanualshub.com/

REAR DEFOGGER WITH TIMER (if equipped)

To activate the rear window defogger, press the switch marked while the key switch is in the "ON" position. Then, the yellow light on the switch turns on. After about 15 minutes, the defogger automatically turn off as well as the yellow light. To turn the defogger off, press the switch once more.

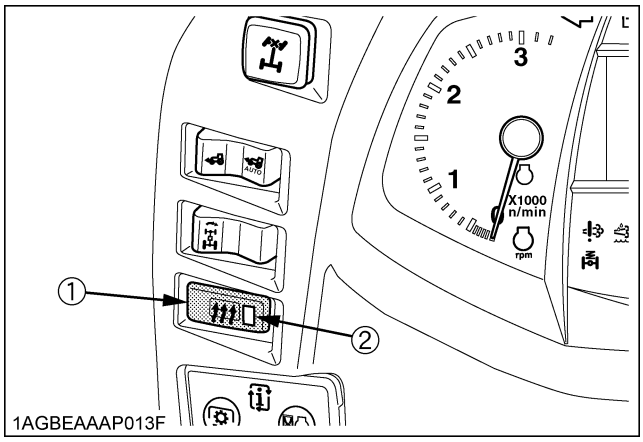

(1) Defogger switch
(2) Yellow light

IMPORTANT :

- The battery will discharge if the defogger and the key switch remain in the "ON" or "ACC" positions with the engine stopped.
  Always use the defogger with the engine running.

INSTALLING THE IMPLEMENT CONTROL BOX

1. Make a slit into the corner cover. Introduce the implement control cable and hydraulic hose through this slit into the CAB.

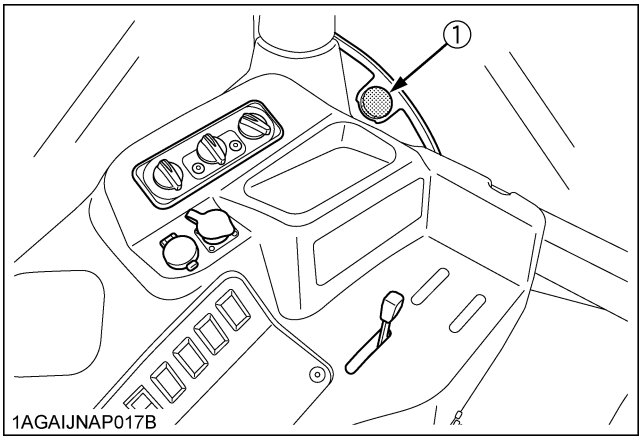

(1) Corner cover

2. Remove the plugs in inner roof, and cut off the hatched zone of the rear pillar cover with a utility knife. Attach the control box stay with internal nuts.

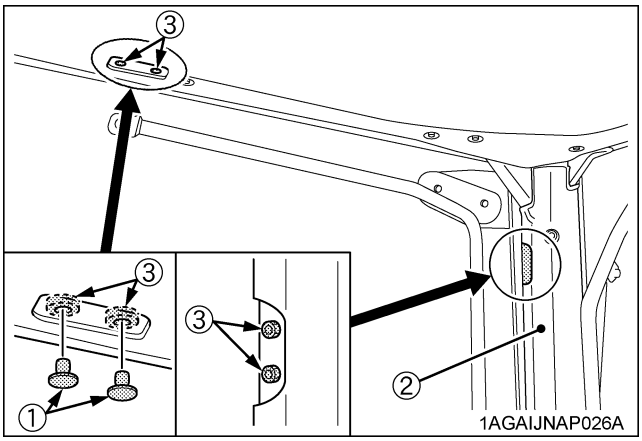

(1) Plug
(2) Pillar cover
(3) M6 nuts

https://truckmanualshub.com/

ELECTRICAL OUTLET

■Electrical Outlet

A electrical outlet is supplied for use with implement.

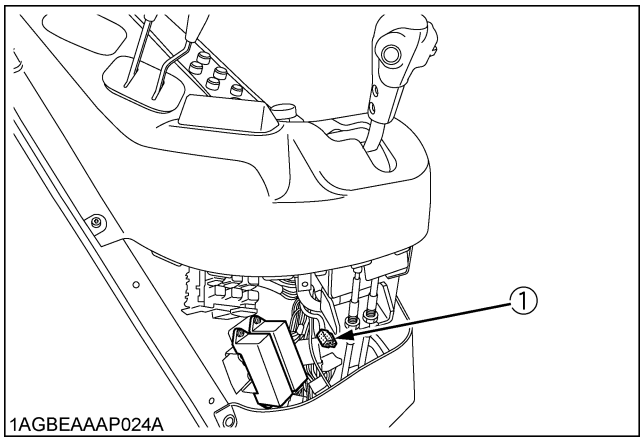

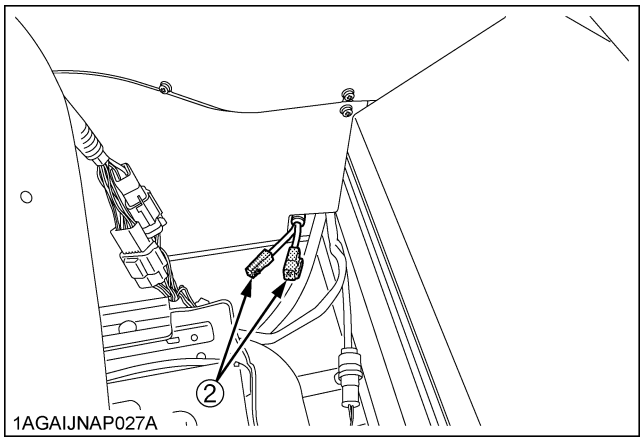

(1) Connector for loader electrical outlet (15A)
(2) Accessory electrical outlet (20A)

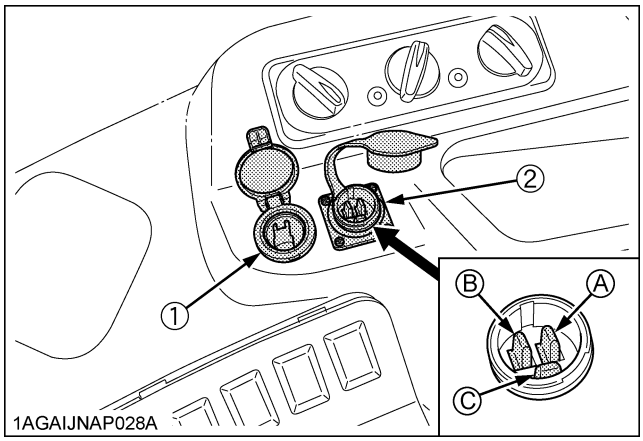

(1) Accessory electrical outlet (15A)
(2) Accessory electrical outlet
(A) Terminal: Through the ACC position of the key switch (5 A)
(B) Terminal: Through the battery direct (30A)
(C) Terminal: Ground

https://truckmanualshub.com/

MAINTENANCE

SERVICE INTERVALS

	Interval	Items		Ref. page		
A	initial 50 Hr	Engine oil	Change	124		
		Engine oil filter	Replace	124		
		Fan/Air-conditioner belt [M6-131, M6-141]	Adjust	124		
B	every 50 Hr	Engine start system	Check	124		
		Wheel bolt torque	Check	125		
		Tie-rod dust cover	Check	126	*2	
C	every 100 Hr	Greasing	---	126		
		Air cleaner Primary element	Clean	128	*1	
		Fan belt [M6-101,M6-111]	Adjust	129		
		Brake pedal	Adjust	129		
		Parking brake lever	Adjust	130	*2	
		Battery condition	Check	131	*7	
		Air conditioner drive belt [M6-101,M6-111]	Adjust	133		
D	every 200 Hr	Toe-in	Adjust	133		
		Fuel tank water	Drain	134		
		Inner air filter	Clean	134		
		Fresh air filter	Clean	135		
E	every 400 Hr	Fan/Air-conditioner belt [M6-131, M6-141]	Adjust	136	*5	
		Water separator	Clean	137		
		Fuel solenoid pump	Clean	138		
F	every 500 Hr	Engine oil	Change	138	*5	
		Engine oil filter	Replace	139	*5	
		Pre-Fuel filter [M6-131, M6-141]	Clean	140		
		Fuel filter	Replace	140		
		Hydraulic oil filter	Replace	141		

	Interval	Items		Ref. page		
F	every 500 Hr	Power steering oil line	Check	142	*6	
		Radiator hose and clamp	Check	142	*6	
		Fuel line	Check	144	*6	
		Intake air line	Check	144	*6	
		Oil cooler line	Check	145	*6	
		Power Shift	Adjust	145	*2	
		Air conditioner pipes and hoses	Check	145	*6	
G	every 600 Hr	Front axle pivot	Adjust	145		
		King-pin pivot	Adjust	146		
H	every 1000Hr	Transmission fluid	Change	146		
		Front differential case oil	Change	147		
		Front axle gear case oil	Change	147		
		Engine valve clearance	Adjust	147	*2	
I	every 1000Hr or 1 year *3	Air cleaner Primary element	Replace	148		
		Air cleaner Secondary element	Replace	148		
		Exhaust manifold	Check	148	*2	
J	every 1500Hr	Fuel injector nozzle tip	Clean	148	*2	@
		DEF/AdBlue® injector tip	Clean	148	*2	
		DEF/AdBlue® line	Check	148		
		Oil separator element	Replace	148		@
		PCV (Positive crankcase ventilation) valve (oil separator)	Check	148	*2	@
		EGR cooler	Check Clean	148	*2	@
		Accumulator [Front suspension type]	Check	148	*2	

https://truckmanualshub.com/

	Interval	Items		Ref. page		
K	every 2000Hr or 2 years *4	Cooling system	Flush	149		
		Coolant	Change	150		
L	every 3000Hr	Turbo charger	Check	151	*2	@
		Supply pump	Check	151	*2	
		Intake air heater [M6-101,M6-111]	Check	151	*2	
		EGR system	Check Clean	151	*2	@
		DPF muffler [M6-101,M6-111]	Clean	151	*2	@
		DEF/AdBlue® injector	Check	151	*2	
		DEF/AdBlue® pump filter	Replace	151		
M	every 8000Hr	DPF muffler [M6-131,M6-141]	Clean	152	*2	@
N	every 9000Hr	DEF/AdBlue® tank filter	Replace	152	*2	
O	every 1 year	DPF differential pressure sensor pipe	Check	152	*2	
		EGR pipe	Check	152	*2	
		CAB isolation cushion	Check	152		
		Antifrost heater for Oil Separator (if equipped)	Check	152	*2	
P	every 2 years	PCV valve hose	Replace	152	*2	
		DPF differential pressure sensor hose	Replace	152	*2	
		Brake hose	Replace	152	*2	
		Clutch hose	Replace	152	*2	
		Boost sensor hose	Replace	152	*2	
		Differential lock hose	Replace	152	*2	
Q	every 3 years	Parking brake cable	Replace	152	*2	
R	every 4 years	Radiator hose and clamp	Replace	153		
		Fuel line	Replace	153	*2	
		Intake air line	Replace	153	*2	
		Oil cooler line	Replace	153	*2	

	Interval	Items		Ref. page		
R	every 4 years	Power steering oil line	Replace	153	*2	
		Lift cylinder hose	Replace	153	*2	
		Front suspension hose [Front suspension type]	Replace	153	*2	
		Master cylinder kit	Replace	153	*2	
		Equalizer kit	Replace	153	*2	
		Brake seal 1 and 2	Replace	153	*2	
		Air conditioner pipes and hoses	Replace	153	*2	
S	Service as required	Fuel system	Bleed	153		
		Brake system	Bleed	154		
		Clutch housing water	Drain	154		
		Fuse	Replace	155		
		Light bulb	Replace	159		
		Head lamp	Replace	159		
		Lubricating point	---	159		
		Washer liquid	Add	160		
		Refrigerant (gas)	Check	160		

*1 Air cleaner should be cleaned more often in dusty conditions than in normal conditions.

*2 Consult your local KUBOTA Dealer for this service.

*3 Every 1000 hours or every 1 year, whichever comes first.

*4 Every 2000 hours or every 2 years, whichever comes first.

*5 The initial 50 hours should not be a replacement cycle.

*6 Replace if any deterioration (crack, hardening, scar, or deformation) or damage occurred.

*7 When the battery is used for less than 100 hours per year, check the battery condition by reading the indicator annually.

- The items listed above (@ marked) are registered as emission related critical parts by KUBOTA in the U.S.EPA nonroad emission regulation. As the engine owner, you are responsible for the performance of the required maintenance on the engine according to the above instruction.
  Please see the Warranty Statement in detail.

https://truckmanualshub.com/

■Maintenance Items Chart

◆ How to use the chart

1. The circles in this at-a-glance chart indicate the relevant points between the tractor's hour meter readings and the service intervals. Following these circles and the maintenance item group (A thru R), keep up your tractor.
2. For details of the maintenance item group, refer back to the "SERVICE INTERVALS" on the previous pages.

◆ Chart at a glance

maintenance item group	Initial only	Interval												
	50 Hr	50 Hr	100 Hr	200 Hr	400 Hr	500 Hr	600 Hr	1000 Hr	1500 Hr	3000 Hr	8000 Hr	9000 Hr	1000 Hr or 1 year	2000 Hr or 2 years
A	○													
B		○	○	○	○	○	○	○	○	○	○	○		
C			○	○	○	○	○	○	○	○	○	○		
D				○	○		○	○		○	○	○		
E					○						○			
F						○		○	○	○	○	○		
G							○			○		○		
H								○		○	○	○		
I													○	
J									○	○		○		
K														○
L										○		○		
M											○			
N												○		

maintenance item group	Interval			
	1 year	2 years	3 years	4 years
O	○			
P		○		
Q			○	
R				○

https://truckmanualshub.com/

LUBRICANTS, FUEL AND COOLANT

No.	Locations	Capacities				Lubricants	
		M6-101	**M6-111**	**M6-131**	**M6-141**		
1	Fuel	190 L (50.2 U.S.gals.)				No.2-D S15 diesel fuel No.1-D S15 diesel fuel if temperature is below -10℃ (14℉)	
2	DEF/AdBlue®	16 L (4.2 U.S.gals.)					
3	Coolant	11.5 L (12.2 U.S.qts.) (Recovery tank: 1.5 L (1.6 U.S.qts.))		15.9 L (16.8 U.S.qts.) (Recovery tank: 1.5 L (1.6 U.S.qts.))		Fresh clean soft water with anti-freeze	
4	Washer liquid	2 L (2.1 U.S.qts.)				Automobile washer liquid	
5	Engine crankcase (with filter)	10.5 L (11.1 U.S.qts.)		14.6 L (15.4 U.S.qts.)		● Engine oil: API Service Classification	CJ-4 [**DPF** type engine]
						Above 25℃ (77℉)	SAE30, SAE10W-30 or 15W-40
						-10 to 25℃ (14 to 77℉)	SAE10W-30 or 15W-40
						Below -10℃ (14℉)	SAE10W-30
6	Transmission case	65 L (68.7 U.S.qts.)				● KUBOTA SUPER UDT2 fluid*	
7	Front differential case oil	7 L (7.4 U.S.qts.)		13 L (13.7 U.S.qts.)		● KUBOTA SUPER UDT2 fluid* or SAE 80 - SAE 90 gear oil	
8	Front axle gear case oil	3.5 L (3.7 U.S.qts.)		4.5 L (4.8 U.S.qts.)			
9	Greasing	No. of greasing points				Capacity	Type of grease
	Top link	2				Until grease overflows.	Multipurpose Grease NLGI-2 OR NLGI-1(GC-LB)
	Lift rod	2					
	Front axle gear case support	2					
	Front axle support	2					
	Hydraulic lift cylinder pin	4					
	Hydraulic arm axle	1					
	Battery terminal	2				A small amount	

[Front suspension type]

8	Greasing	No. of greasing points	Capacity	Type of grease
	Suspension cylinder	2	Until grease overflows.	Multipurpose Grease NLGI-2 OR NLGI-1(GC-LB)
	Suspension arm	2		
	Universal joint	4		

NOTE :

The product name of KUBOTA genuine UDT fluid may be different from that in the Operator's Manual depending on countries or territories. Consult your local KUBOTA Dealer for further details.

https://truckmanualshub.com/

NOTE :

◆ **Engine Oil:**

- Oil used in the engine should have an American Petroleum Institute (API) service classification and Proper SAE Engine Oil according to the ambient temperatures as shown above:

- Refer to the following table for the suitable API classification engine oil according to the engine type (with DPF (Diesel Particulate Filter) type engines) and the fuel.

Fuel used	Engine oil classification (API classification)
	Oil class for engines with DPF
Ultra Low Sulfur Fuel [<0.0015% (15 ppm)]	**CJ-4**

◆ **Fuel:**

- Use the ultra low sulfur diesel fuel only [below 0.0015% (15 ppm)] for these engines.
- Cetane number of 45 minimum. Cetane number greater than 50 is preferred, especially for temperatures below -20℃ (-4℉) or elevations above 1500 m (5000 ft).
- Diesel fuels specified to EN 590 or ASTM D975 are recommended.
- No.2-D is a distillate fuel of lower volatility for engines in industrial and heavy mobile service. (SAE J313 JUN87)

◆ **DEF/AdBlue®:**

The DEF/AdBlue®, used as reducing agent of SCR, is a 32.5% urea aqueous solution.
The product is available at gas stations, truck stops and specialty shops. Be sure to use the genuine product only.

- Use DEF/AdBlue® meets ISO 22241 requirements ONLY for KUBOTA Engines equipped with SCR systems.

◆ **Transmission Oil:**

*KUBOTA Super UDT-2: For an enhanced ownership experience, we highly recommend Super UDT-2 to be used instead of standard hydraulic/transmission fluid.
Super UDT-2 is a proprietary KUBOTA formulation that delivers superior performance and protection in all operating conditions.
Regular UDT is also permitted for use in this machine.

- Indicated capacities of water and oil are manufacturer's estimate.

https://truckmanualshub.com/

PERIODIC SERVICE

WARNING

To avoid personal injury or death:

- **Do not work under any hydraulically supported devices. They can settle, suddenly leak down, or be accidentally lowered. If necessary to work under tractor or any machine elements for servicing or adjustment, securely support them with stands or suitable blocking beforehand.**

HOW TO OPEN THE HOOD

WARNING

To avoid personal injury or death from contact with moving parts;

- **Never open the hood or engine side cover while the engine is running.**
- **Do not touch muffler or exhaust pipes while they are hot; Severe burns could result.**
- **Hold the hood with other hand while unlocking release lever.**

■Hood

To open the hood, hold the hood and pull the release lever and open the hood.

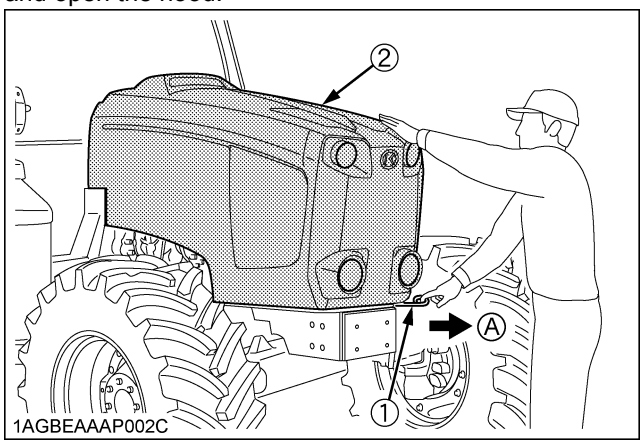

(1) Release lever *(A) "PULL"*
(2) Hood

NOTE :

- To close the hood, pull down on the strap and push the hood into position using both hands.

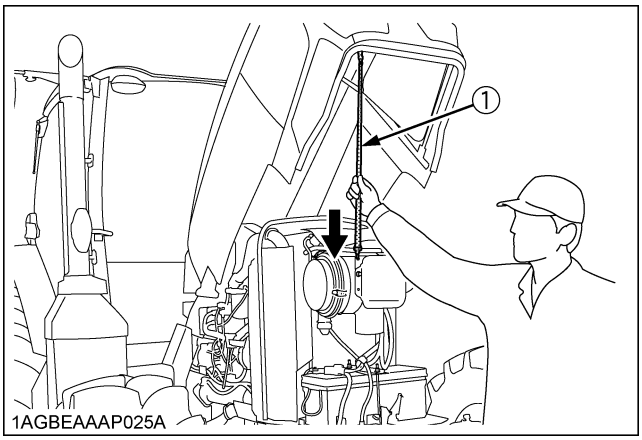

(1) Strap

■Side Cover

Remove the bolts as shown below.

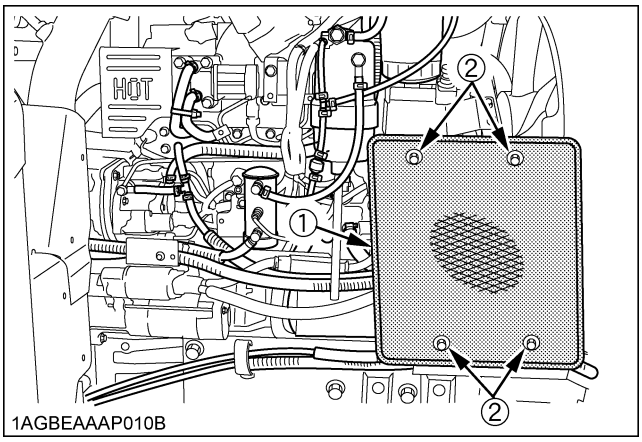

(1) Side cover
(2) Bolt

https://truckmanualshub.com/

DAILY CHECK

For your own safety and maximum service life of the machine, make a thorough daily inspection before operating the machine to start the engine.

WARNING

To avoid personal injury or death:
Take the following precautions when checking the tractor.
- **Park the machine on firm and level ground.**
- **Set the parking brake.**
- **Lower the implement to the ground.**
- **All residual pressure of the hydraulic system released.**
- **Stop the engine and remove the key.**
- **Lower the front suspension to the lowest position. [Front suspension type]**

IMPORTANT :
- When cleaning the inside of the door glass, use a mild detergent. The inner layer of the door glass contains IR film (infrared rejection film). The use of acidic or alkaline detergents can result in discoloration or peeling of the film, therefore reducing performance.

■Walk Around Inspection

Look around and under the tractor for such items as loose bolts, trash build-up, oil or coolant leaks, broken or worn parts.

■Checking and Refueling

WARNING

To avoid personal injury or death:
- **Do not smoke while refueling.**
- **Be sure to stop the engine before refueling.**

1. Check the amount of fuel by fuel gauge.
2. When the fuel warning indicator lights up, it is time to add fuel.

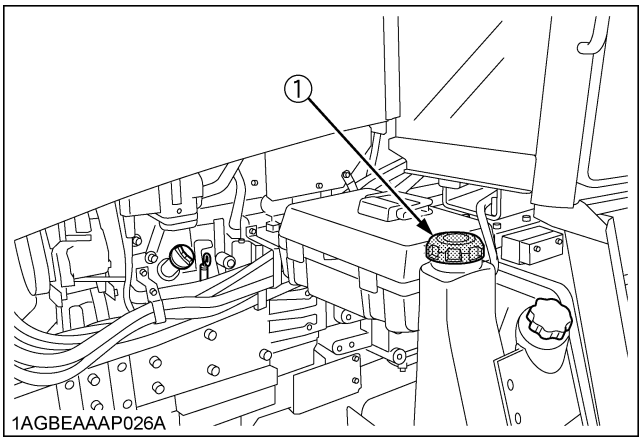

(1) Fuel tank cap

Fuel tank capacity	190 L (50.2 U.S.gals.)

IMPORTANT :
- Be sure to use Ultra Low Sulfur Fuel (S15).
- Do not permit dirt or trash to get into the fuel system.
- Be careful not to let the fuel tank become empty, otherwise air will enter the fuel system, necessitating bleeding before next engine start.
- If the engine runs out of fuel and stalls, the engine components may be damaged.
- Be careful not to spill during refueling. If a spill should occur, wipe it off at once, or it may cause a fire.
- To prevent condensation (water) accumulation in the fuel tank, fill the tank before parking overnight.

https://truckmanualshub.com/

■Checking the DEF/AdBlue® level and adding the fluid

WARNING

To avoid personal injury or death:

- **Before adding DEF/AdBlue®, stop the engine. When adding the fluid, preferably wear protective goggles and rubber gloves.**

Look at the DEF/AdBlue® gauge on the instrument panel to see how much fluid remains. If the level is too low, add DEF/AdBlue® as required.

Before removing the DEF/AdBlue® cap, clean dirt away from the caps and the tank openings.

If the fluid runs short or poor-quality fluid is added, a warning sign appears on the instrument panel. If this warning is ignored and the operation continues, the engine output will be limited.

(For details, refer to "Warning Indication and its Countermeasure" in "SELECTIVE CATALYTIC REDUCTION (SCR) MUFFLER" in "OPERATING THE ENGINE" section.)

The DEF/AdBlue® tank cap is blue. Be careful not to confuse it with the fuel tank cap.

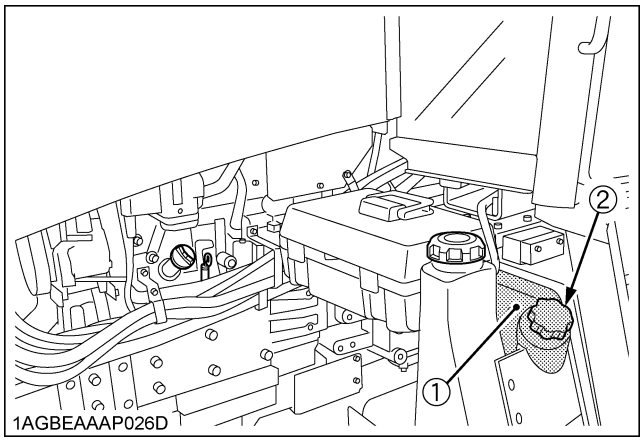

(1) DEF/AdBlue® tank
(2) Tank cap (Blue)

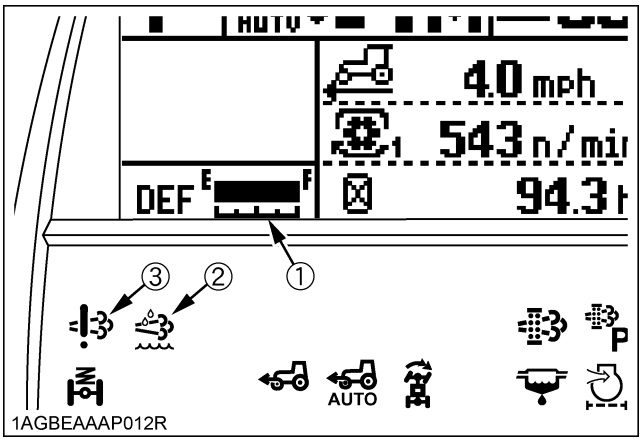

(1) DEF/AdBlue® gauge
(2) DEF/AdBlue® warning indicator
(3) DEF/AdBlue® system warning indicator

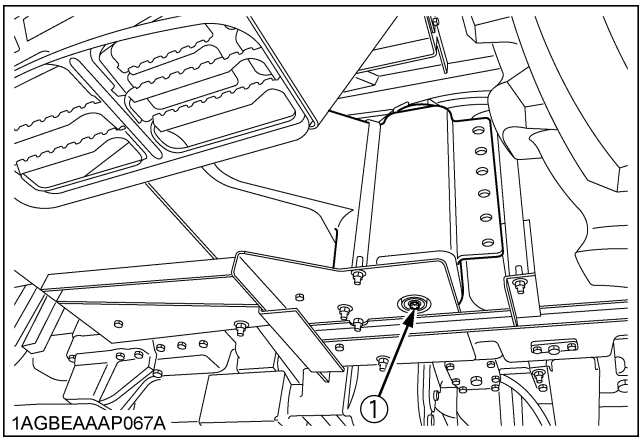

(1) Drain plug

Tank capacity	16 L (4.2 U.S.gals.)

IMPORTANT :

- Use exclusively DEF/AdBlue® that complies with the requirements of ISO 22241-1.
- **Do not allow fuel, oil or the like to enter the DEF/AdBlue ® tank.**
  If any other substance (gasoline/diesel/oil) is mistakenly introduced into the DEF/AdBlue® tank, do not attempt to start the engine and contact your local KUBOTA dealer as soon as possible.
- Check the DEF/AdBlue ® gauge regularly to avoid emptying its tank.
- If the DEF/AdBlue ® spills, wipe it with water. If spills are not wiped, metal areas will rust and the aluminum areas will corrode.

https://truckmanualshub.com/

■Checking Water Separator

1. When the water has collected upper limit in the water separator, the water separator indicator on the instrument panel lights up and warning buzzer sounding.

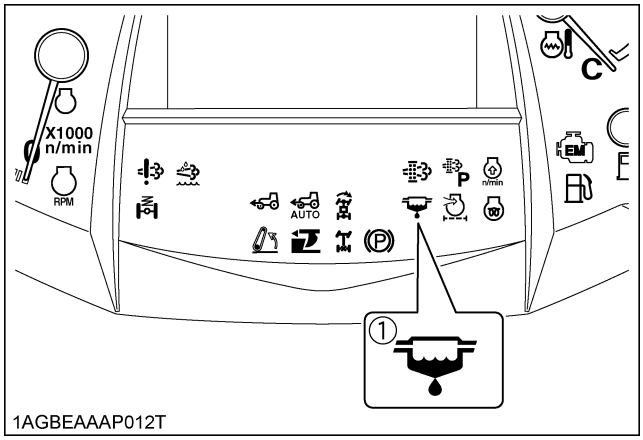

(1) Water separator indicator

2. In such case, loosen the drain plug by several turns.
3. Allow water to drain. When no more water comes out and fuel starts to flow out, retighten the drain plug.
4. Bleed the fuel system.
   (See "SERVICE AS REQUIRED" in "PERIODIC SERVICE" section.)

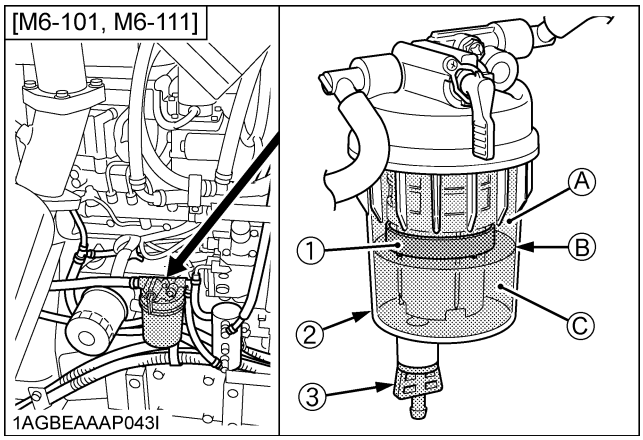

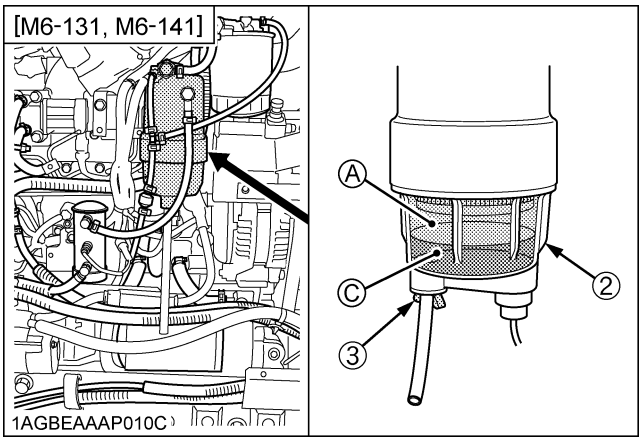

(1) Red float
(2) Cup
(3) Drain plug

(A) "FUEL"
(B) "UPPER LIMIT"
(C) "WATER"

NOTE :

- **[M6-101, M6-111]**
  When the red float reaches near the upper limit level, start from step 2 in the above procedure to drain water in the water separator.

IMPORTANT :

- If water is drawn through to the fuel pump, extensive damage will occur.

https://truckmanualshub.com/

■Checking Engine Oil Level

WARNING

To avoid personal injury or death:

- **Be sure to stop the engine before checking the oil level.**

1. Park the machine on a flat surface.
2. Check engine oil before starting the engine or 5 minutes or more after the engine has stopped.
3. To check the oil level, draw out the dipstick, wipe it clean, replace it, and draw it out again. Check to see that the oil level lines between the 2 notches.
   If the level is too low, add new oil to the prescribed level at the oil inlet.
   (See "LUBRICANTS" in "MAINTENANCE" section.)

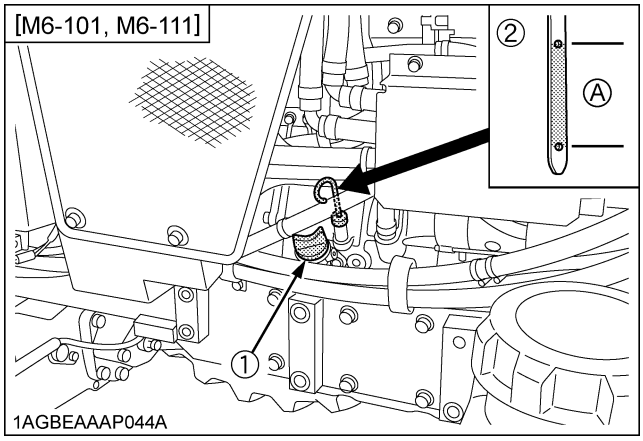

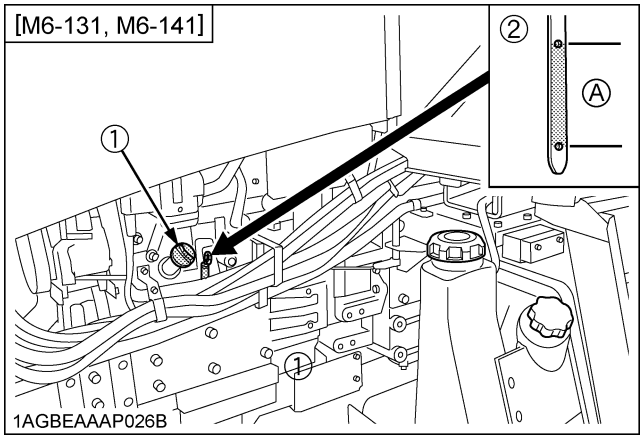

(1) Oil inlet (A) Oil level is acceptable within this range.
(2) Dipstick

IMPORTANT :

- When using an oil of different maker or viscosity from the previous one, remove all of the old oil.
  Never mix two different types of oil.
- If oil level is low, do not run engine.

NOTE :

- At times a small amount of fuel, which is used to regenerate the DPF, may get mixed with the engine oil and the engine oil may increase in volume.

■Checking Transmission Fluid Level

1. Park the machine on a flat surface, lower the implement and shut off engine.
2. To check the oil level, draw out the dipstick, wipe it clean, replace it, and draw it out again. Check to see that the oil level lines between the 2 notches.
   If the level is too low, add new oil to the prescribed level at the oil inlet.
   (See "LUBRICANTS" in "MAINTENANCE" section.)

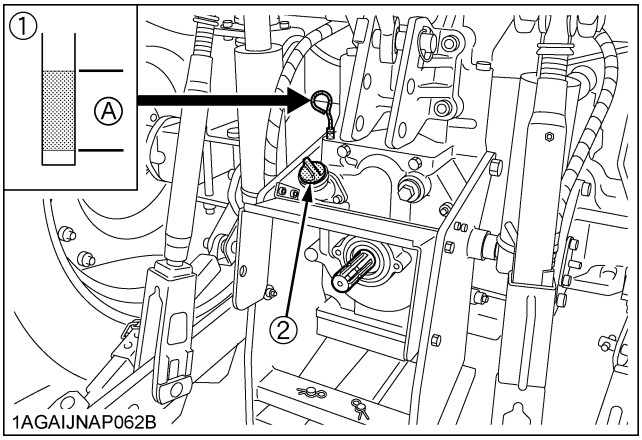

(1) Dipstick (A) Oil level is acceptable within this range.
(2) Oil inlet

IMPORTANT :

- If oil level is low, do not run engine.

https://truckmanualshub.com/

■Checking Coolant Level

WARNING

To avoid personal injury or death:

- **Do not remove radiator cap while coolant is hot. When cool, slowly rotate cap to the first stop and allow sufficient time for excess pressure to escape before removing the cap completely.**

1. Check to see that the coolant level is between the "FULL" and "LOW" marks of recovery tank.
2. When the coolant level drops due to evaporation, add soft water only up to the full level.
   In case of leakage, add anti-freeze and soft water in the specified mixing ratio up to the full level.
   (See "Flushing Cooling System and Changing Coolant" in "EVERY 2000 HOURS or 2 YEARS" in "PERIODIC SERVICE" section.)
3. When the coolant level is lower than "LOW" mark of recovery tank, remove the radiator cap and check to see that the coolant level is just below the port. If level is low, add coolant.

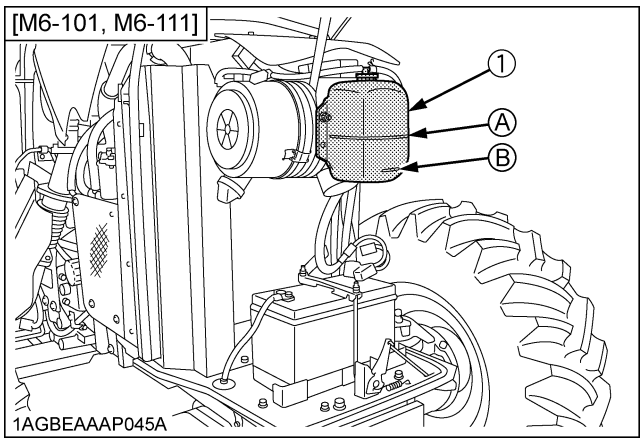

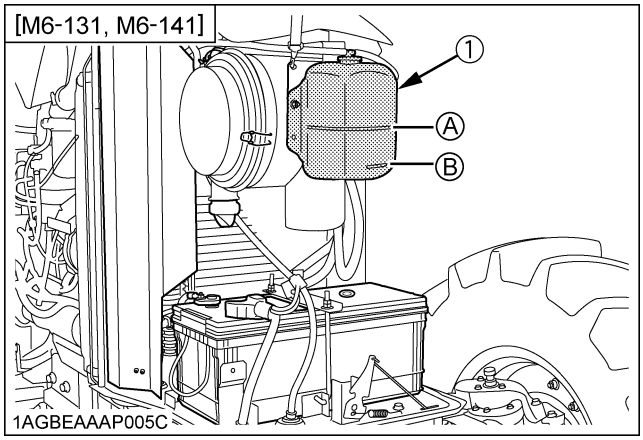

(1) Recovery tank *(A) "FULL"* *(B) "LOW"*

IMPORTANT :

- If the radiator cap has to be removed, follow the caution above and securely retighten the cap.
- Use clean, fresh soft water and anti-freeze to fill the radiator.
- If coolant should leak, consult your local KUBOTA Dealer.

■Cleaning Evacuator Valve

Open the evacuator valve to get rid of large particles of dust and dirt.

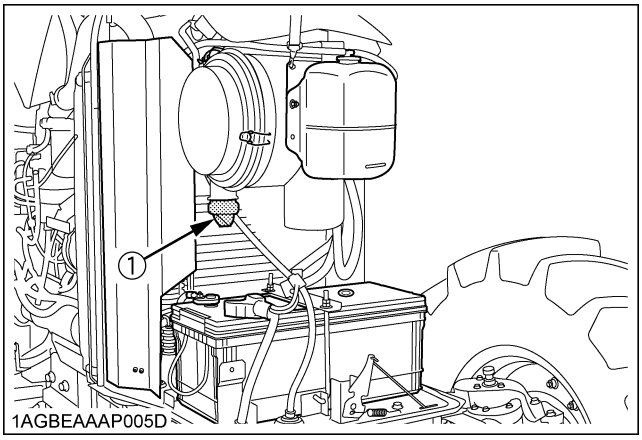

(1) Evacuator valve

https://truckmanualshub.com/

■Cleaning Grill, Radiator and Screen

WARNING

To avoid personal injury or death:

- **Be sure to stop the engine before removing the screen.**
- **The condenser and receiver become hot while the air conditioner is running. Before checking or cleaning them, wait long enough until they cool down.**

◆ **Opening the panel (RH)**

1. To open the panel, pull its front outward.
2. To close the panel, push it inward to get locked.

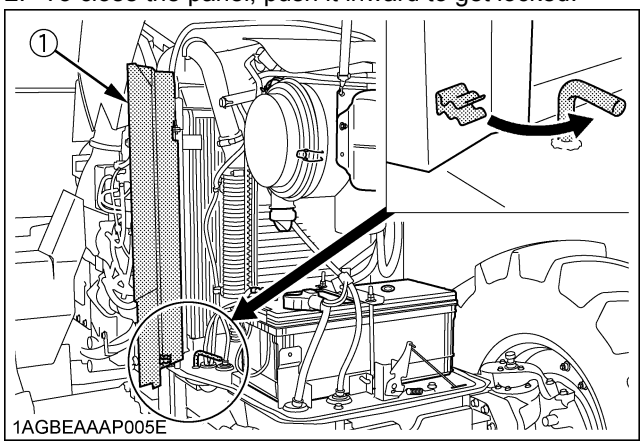

(1) Panel (RH)

◆ **Sliding the air conditioner condenser**

1. Loosen the wing nut.
2. Hold the handle, slide the air conditioner condenser assembly toward yourself.

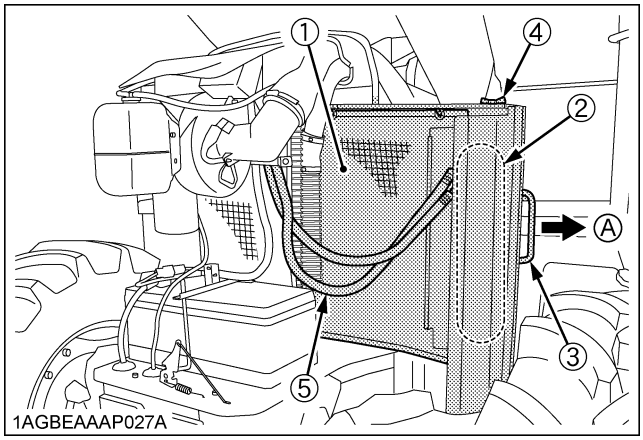

(1) Condenser
(2) Receiver
(3) Handle
(4) Wing nut
(5) Air conditioner hose
(A) "PULL"

IMPORTANT :

- Do not hold the air conditioner receiver or the air conditioner pipes when sliding out the condenser for cleaning.

◆ **Cleaning**

1. Check front grill to be sure it is clean from debris.
2. Detach the screen and remove all foreign materials.
3. Check radiator, air conditioner condenser, intercooler, oil cooler and fuel cooler to be sure they are clean from debris.

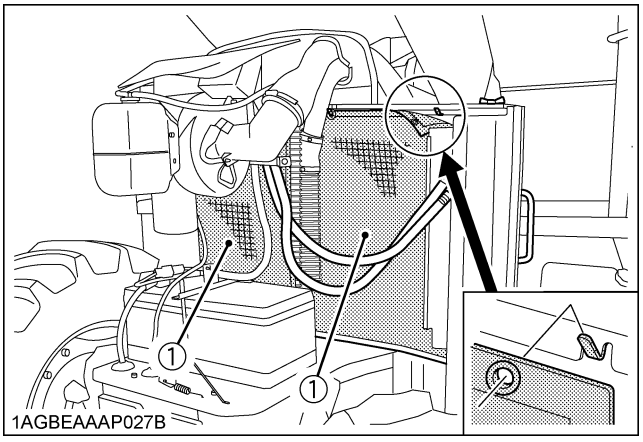

(1) Screen

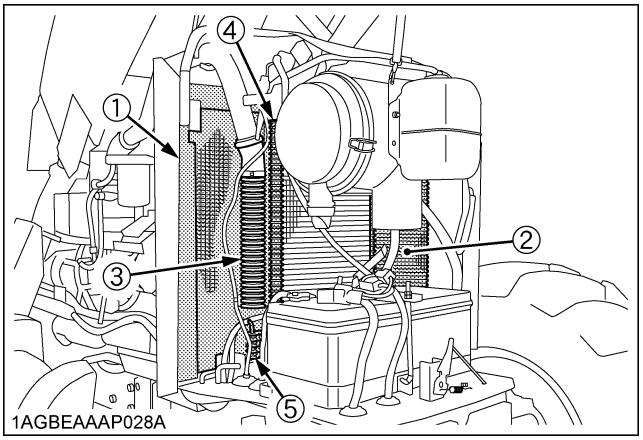

(1) Radiator
(2) Air conditioner condenser
(3) Intercooler
(4) Oil cooler
(5) Fuel cooler

IMPORTANT :

- Grill and screen must be clean from debris to prevent engine from overheating and to allow good air intake for air cleaner.

https://truckmanualshub.com/

■Checking DPF/SCR Muffler

WARNING

To avoid personal injury or death:

- **Before checking or cleaning the DPF/SCR muffler, stop the engine and wait long enough until it is cooled down.**

Check the DPF/SCR muffler and its surroundings for accumulation of anything flammable. Otherwise a fire may result.

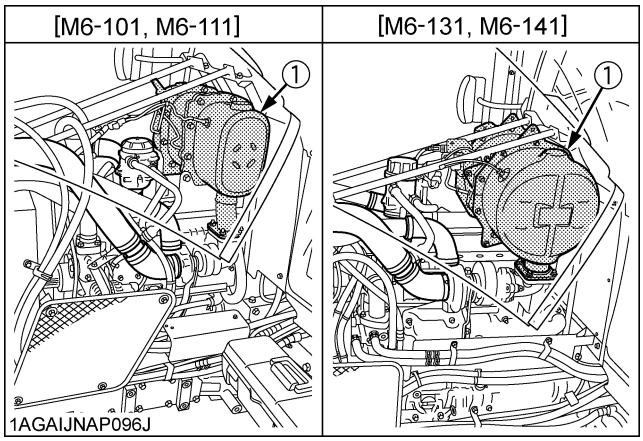

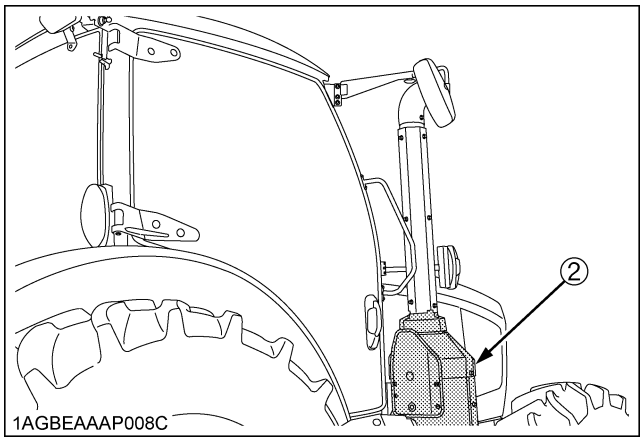

(1) DPF muffler
(2) SCR muffler

■Checking Brake Pedal

WARNING

To avoid personal injury or death:

- **Be sure brake pedals have equal adjustment when using locked together. Incorrect or unequal brake pedal adjustment can cause the tractor to swerve or roll-over.**

1. Inspect the brake pedals for free travel, and smooth operation.
2. Adjust if incorrect measurement is found:
   (See "Adjusting Brake Pedal" in "EVERY 100 HOURS" in "PERIODIC SERVICE" section.)

Proper brake pedal free travel	3 to 7 mm (0.1 to 0.3 in.) on the pedal
	Keep the free travel in the right and left brake pedals equal.

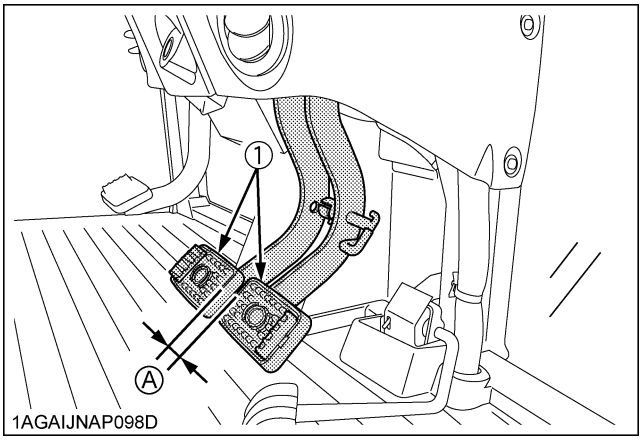

(1) Brake pedals *(A) "FREE TRAVEL"*

NOTE :

- Brake pedals should be equal when depressed.

https://truckmanualshub.com/

■Checking Gauges, Meter and Easy Checker(TM)

1. Inspect the instrument panel for broken gauge(s), meter(s) and Easy Checker (TM).
2. Replace if broken.

■Checking Head Light, Turn Signal / Hazard Light etc.

1. Inspect the lights for broken bulbs and lenses.
2. Replace if broken.

■Checking Seat Belt

1. Always check condition of seat belt attaching hardware before operating tractor.
2. Replace if damaged.

■Checking Movable Parts

If any of the movable parts, such as levers and pedals, is not smoothly moved because of rust or sticky material, do not attempt to force it into motion.
In the above case, remove the rust or the sticky material, and apply oil or grease on the relevant spot.
Otherwise, the machine may get damaged.

INITIAL 50 HOURS

With a new machine, be sure to do the servicing, as discussed below, after the first 50 operating hours.

■Changing Engine Oil

(See "Changing Engine Oil" in "EVERY 500 HOURS" in "PERIODIC SERVICE" section for this service.)

■Replacing Engine Filter

(See "Replacing Engine Oil Filter" in "EVERY 500 HOURS" in "PERIODIC SERVICE" section for this service.)

■Checking Fan / Air-conditioner Belt Tension

[M6-131, M6-141]

(See "Checking Fan/Air-conditioner Belt Tension" in "EVERY 400 HOURS" in "PERIODIC SERVICE" section for this service.)

EVERY 50 HOURS

■Checking Engine Start System

WARNING

To avoid personal injury or death:

- **Do not allow anyone near the tractor while testing.**
- **If the tractor does not pass the test, do not operate the tractor.**

◆ **Preparation before testing.**

1. Place all control levers in the "NEUTRAL" position.
2. Set the parking brake and stop the engine.

◆ **Test: Switch for the Power shift / Range shift lever.**

1. Follow the instruction of "PARKING THE TRACTOR". (See "PARKING THE TRACTOR" in "SAFE OPERATION" section.)
2. Sit on the operator's seat.
3. Shift the Power shift / Range shift lever to the desired position.
4. Depress the clutch pedal fully.
5. Disengage the PTO clutch control switch or lever.
6. Turn the key to "START" position.
7. The engine must not crank.
8. If it cranks, consult your local KUBOTA Dealer for this service.

◆ **Test: Switch for the PTO clutch control switch or lever.**

1. Follow the instruction of "PARKING THE TRACTOR". (See "PARKING THE TRACTOR" in "SAFE OPERATION" section.)
2. Sit on the operator's seat.
3. Engage the PTO clutch control switch or lever.
4. Depress the clutch pedal fully.
5. Shift the Power shift / Range shift lever to the neutral position.
6. Turn the key to "START" position.
7. The engine must not crank.
8. If it cranks, consult your local KUBOTA Dealer for this service.

https://truckmanualshub.com/

◆ **Test: Checking Operator Presence Control (O.P.C.) System.**

1. Follow the instruction of "PARKING THE TRACTOR". (See "PARKING THE TRACTOR" in "SAFE OPERATION" section.)
2. Make sure the PTO drive shaft is disconnected from the tractor.
3. Sit on the operator's seat.
4. Start the engine.
5. Engage the PTO clutch control switch or lever. The PTO should begin to rotate. Disengage the PTO clutch control switch or lever.
6. While lifting yourself from the seat, engage the PTO clutch control switch or lever.
   (1) The PTO should begin to rotate and a buzzer should sound.
   (2) Disengage the PTO clutch control switch or lever.
   (3) If the buzzer does not sound, shut off the engine and consult your local KUBOTA Dealer for immediate servicing of the PTO OPC.
7. If the PTO OPC is operating properly, shut off the engine, and reconnect the implement drive shaft to the PTO. Restart the engine per the available instructions.

WARNING

To avoid personal injury or death:

- **Before checking the PTO OPC, make sure that the PTO drive shaft should be disconnected from the tractor.**
- **If the buzzer does not sound during the PTO OPC check procedure, shut off engine and consult your local KUBOTA Dealer for immediate servicing of the PTO OPC.**
- **The unit should not be operated until servicing is completed.**

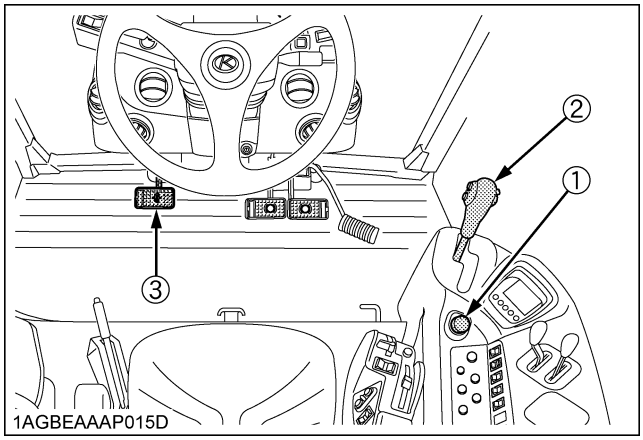

(1) PTO clutch control switch
(2) Power shift / Range shift lever
(3) Clutch pedal

■Checking Wheel Bolt Torque

WARNING

To avoid personal injury or death:

- **Never operate tractor with a loose rim, wheel, or axle.**
- **Any time bolts and nuts are loosened, retighten to specified torque.**
- **Check all bolts and nuts frequently and keep them tight.**

Check wheel bolts and nuts regularly especially when new. If they are loose, tighten them as follows.

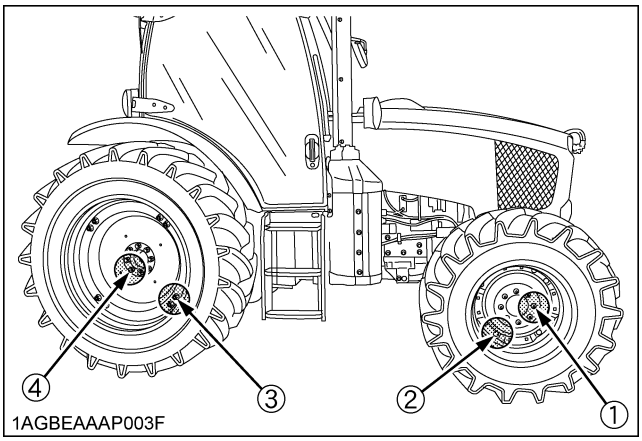

N-m (kgf-m) [ft-lbs.]

(1)	(2)	(3)	(4)
260 to 304 (26.5 to 31.0) [192 to 224]	Waffle wheel 298 to 366 (30.4 to 37.3) [220 to 270]	Steel disk 244 (24.9) [180] Cast iron disk 305 to 325 (31.1 to 33.2) [225 to 240]	343 to 401 (35.0 to 41.0) [254 to 297]

https://truckmanualshub.com/

■Checking Tie-rod Dust Cover

1. Check to see that dust covers are not damaged.
2. If dust covers are damaged, consult local KUBOTA Dealer for this service.

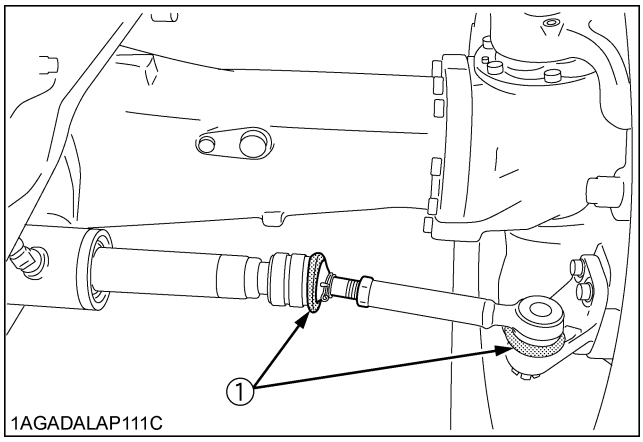

(1) Dust cover

IMPORTANT :

- If dust covers are cracked, water and dust invade into tie-rod and it will be early wear.

EVERY 100 HOURS

■Lubricating Grease Fittings

Apply a small amount of multipurpose grease to the following points every 100 hours:

If you operated the machine in extremely wet and muddy conditions, lubricate grease fittings more often.

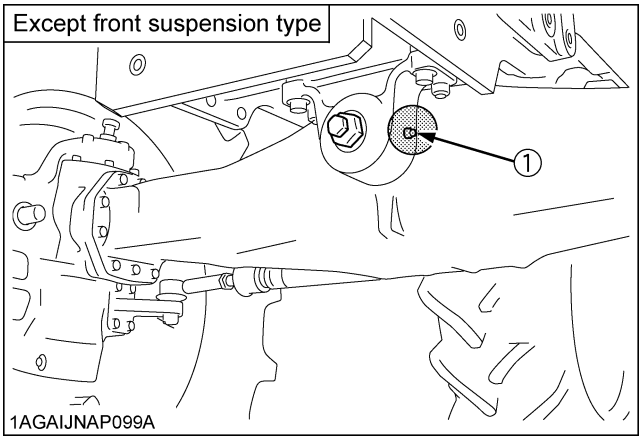

(1) Grease fitting (Front axle support)

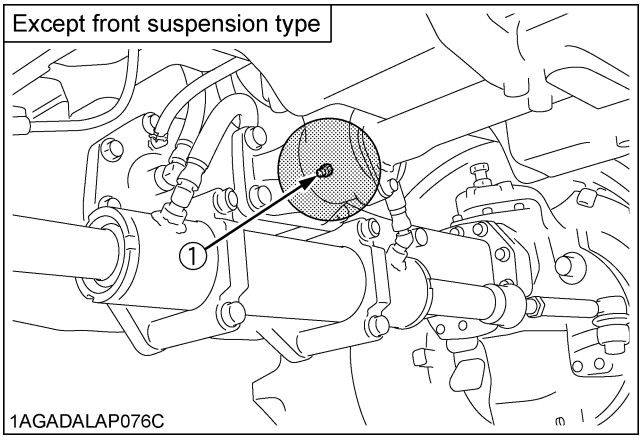

(1) Grease fitting (Front axle support)

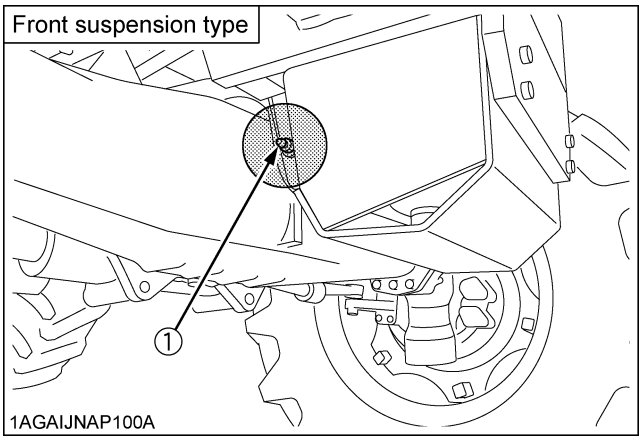

(1) Grease fitting (Front axle support)

https://truckmanualshub.com/

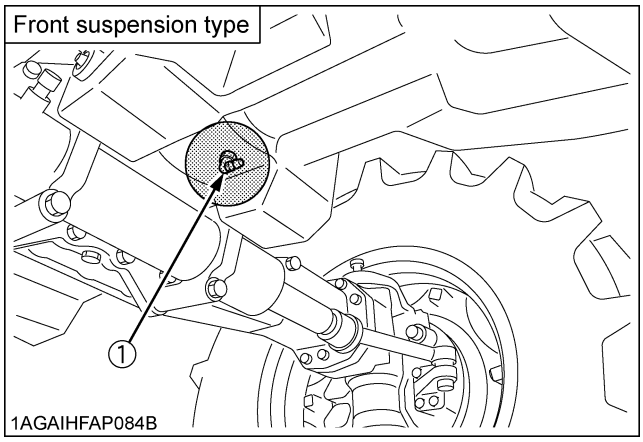

(1) Grease fitting (Front axle support)

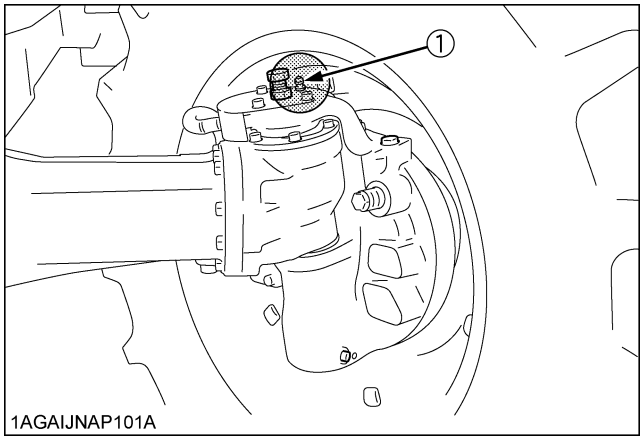

(1) Grease fitting (Front axle gear case support) [RH, LH]

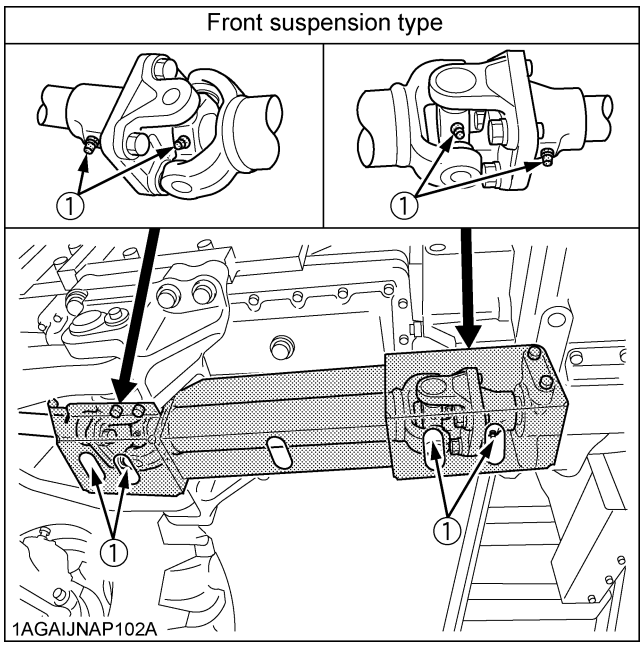

(1) Grease fitting (Universal joint)

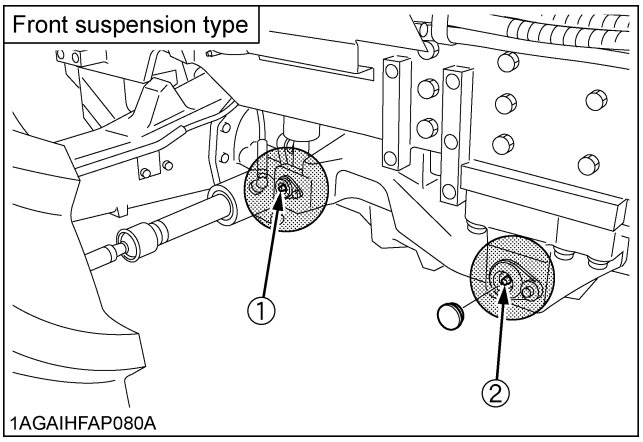

(1) Grease fitting (Suspension cylinder) [RH, LH]
(2) Grease fitting (Suspension arm) [RH, LH]

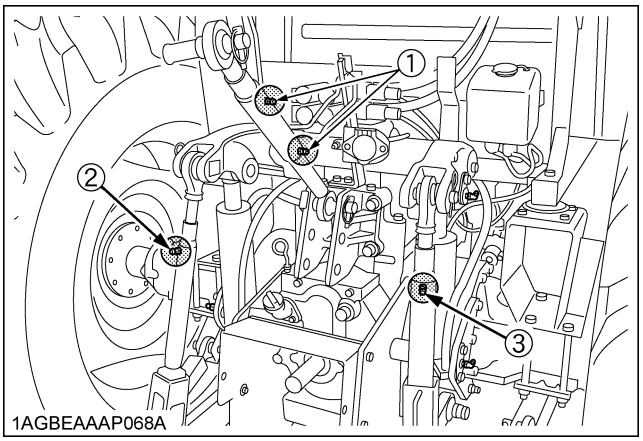

(1) Grease fitting (Top link)
(2) Grease fitting (Lifting rod) [LH]
(3) Grease fitting (Lifting rod) [RH]

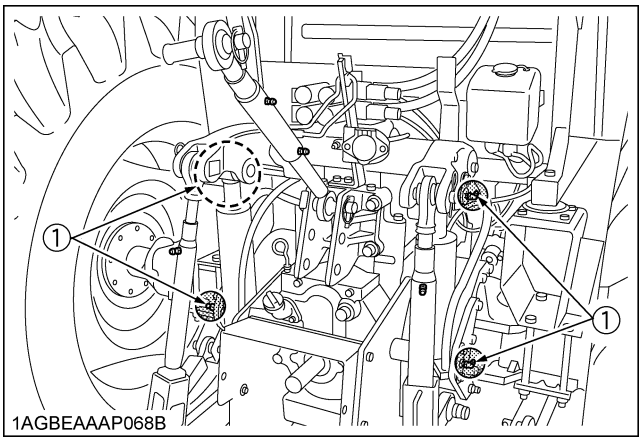

(1) Grease fitting (Hydraulic lift cylinders pin)

https://truckmanualshub.com/

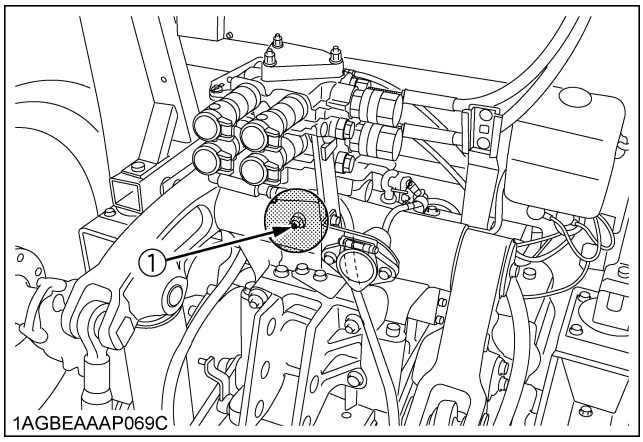

(1) Grease fitting (Hydraulic arm axle)

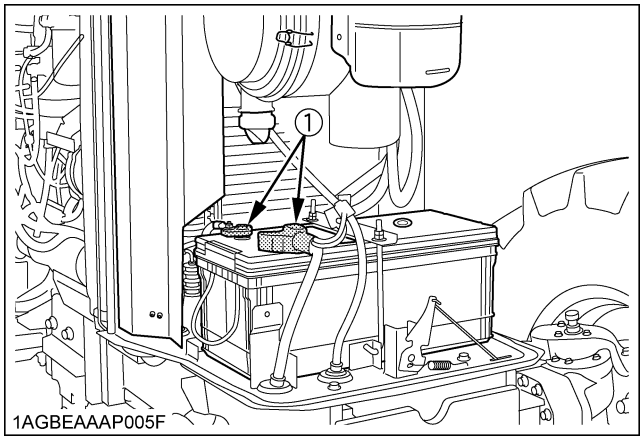

(1) Battery terminals

■Cleaning Air Cleaner Primary Element

1. Remove the air cleaner cover and primary element.
2. Clean the primary element:
   (1) When dry dust adheres to the element, blow compressed air from the inside, turning the element. Pressure of compressed air must be under 205 kPa (2.1 kgf/cm^2, 30 psi).
   (2) When carbon or oil adheres to the element, soak the element in detergent for 15 minutes then wash it several times in water, rinse with clean water and dry it naturally. After element is fully dried, inspect inside of the element with a light and check if it is damaged or not.
3. Replace air cleaner primary element:
   Once every 1000 hours or yearly, whichever comes first.

NOTE :
- Check to see if the evacuator valve is blocked with dust.

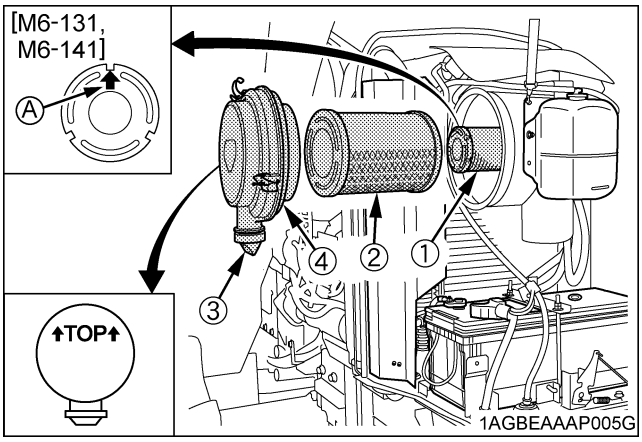

(1) Secondary (safety) element
(2) Primary element
(3) Evacuator valve
(4) Cover
(A) "ARROW"

IMPORTANT :
- The air cleaner uses a dry element, never apply oil.
- Do not run the engine with filter element removed.
- Be sure to refit the cover with the arrow ⬆ (on the rear of cover) upright. If the cover is improperly fitted, evacuator valve will not function and dust will adhere to the element.
- Do not touch the secondary element except in cases where replacing is required.
  (See "Replacing Air Cleaner Secondary Element" in "EVERY 1000 HOURS or 1 YEAR" in "PERIODIC SERVICE" section.)

- **[M6-131, M6-141]**
  Be sure to refit the secondary element with the arrow ⬆ upright.

◆ **Evacuator Valve**

Open the evacuator valve once a week under ordinary conditions - or daily when used in a dusty place - to get rid of large particles of dust and dirt.

https://truckmanualshub.com/

■Adjusting Fan Belt Tension

[M6-101, M6-111]

WARNING

To avoid personal injury or death:

- **Be sure to stop the engine before checking belt tension.**

Proper fan belt tension	A deflection of between 10 to 12 mm (0.39 to 0.47 in.) when the belt is pressed in the middle of the span.

1. Stop the engine and remove the key.
2. Apply moderate thumb pressure to belt between pulleys.
3. If tension is incorrect, loosen the alternator mounting bolts and, using a lever placed between the alternator and the engine block, pull the alternator out until the deflection of the belt falls within acceptable limits.
4. Replace fan belt if it is damaged.

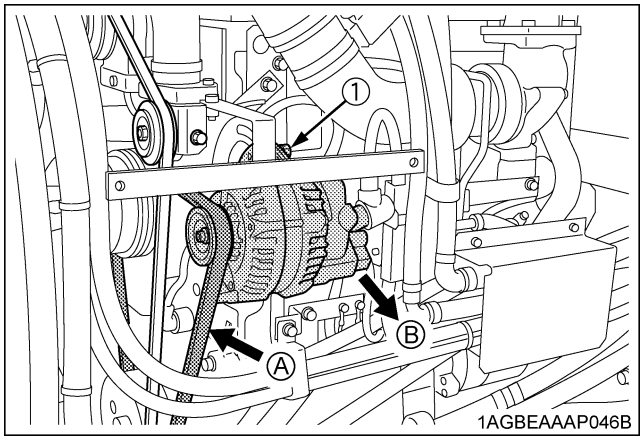

(1) Bolt *(A) Check the belt tension*
(B) To tighten

IMPORTANT :

- Make sure that the V-belt tension is as specified as shown in the table above after tightening the tension pulley mounting nut.

■Adjusting Brake Pedal

WARNING

To avoid personal injury or death:

- **Stop the engine and chock the wheels before checking brake pedal.**
- **To prevent uneven braking, the specification must be within the recommended limit. If found out of the specifications, contact your local KUBOTA Dealer for adjusting the brakes.**

◆ **Checking the brake pedal free travel**

Proper brake pedal free travel	3 to 7 mm (0.1 to 0.3 in.) on the pedal
	Keep the free travel in the right and left brake pedals equal.

1. Set the parking brake.
2. Slightly depress the brake pedals and measure free travel at the top of pedal stroke.

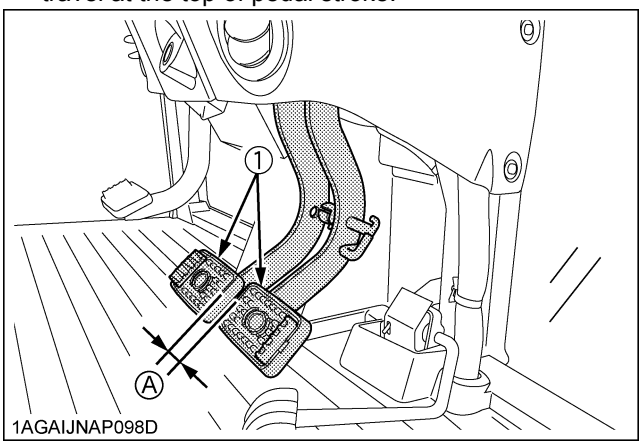

(1) Brake pedals *(A) "FREE TRAVEL"*

NOTE :

- Brake pedals should be equal when depressed.

https://truckmanualshub.com/

◆ **Checking the brake pedal stroke**

Pedal stroke	Less than 100 mm (3.9 in.) at each pedal

1. Disengage the brake pedal lock.
2. Depress the brake pedal several times.
3. Step on the right-hand pedal and measure the level difference (pedal stroke) between this pedal and the left-hand pedal.
4. Do the same for the left-hand pedal.

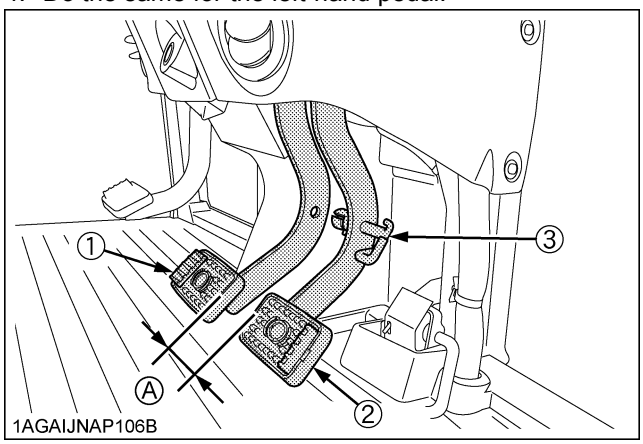

(1) Brake pedal (LH)
(2) Brake pedal (RH)
(3) Brake pedal lock
(A) "PEDAL STROKE"

◆ **Checking the equalizer working level (anti-imbalance device)**

1. Gently step on both brake pedals at once.
2. Further step on the right-hand pedal (the left-hand pedal slightly raises itself) and measure the level difference between the pedals.
3. Do the same for the left-hand pedal.

Equalizer working level	Level difference of over 10 mm (0.4 in.) between both pedals

■Adjusting Parking Brake Lever

WARNING

To avoid personal injury or death:

- **Stop the engine and chock the wheels before checking parking brake.**

Proper parking brake lever free travel	2 notches (Ratchet sound 2)

1. Raise the parking brake lever to the parking position while counting the ratchet sound made by the parking brake lever.
2. If adjustment is needed, loosen the lock nut and adjust the parking brake cable length with in acceptable limit.
3. Retighten the lock nut.

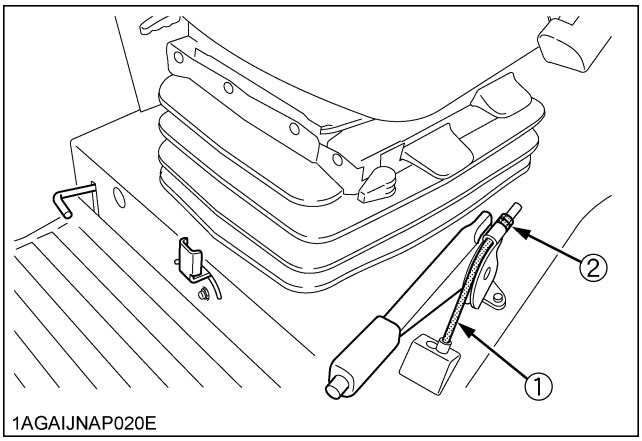

(1) Parking brake cable
(2) Lock nut

https://truckmanualshub.com/

■Checking Battery Condition

DANGER

To avoid the possibility of battery explosion:
For the refillable type battery, follow the instructions below.

- **Do not use or charge the refillable type battery if the fluid level is below the LOWER (lower limit level) mark. Otherwise, the battery component parts may prematurely deteriorate, which may shorten the battery's service life or cause an explosion. Check the fluid level regularly and add distilled water as required so that the fluid level is between the UPPER and LOWER levels.**

WARNING

To avoid personal injury or death:

- **Never remove the battery cap while the engine is running.**
- **Keep electrolyte away from eyes, hands and clothes. If you are spattered with it, wash it away completely with water immediately and get medical attention.**
- **Keep open sparks and flames away from the battery at all times. Hydrogen gas mixed with oxygen becomes very explosive.**
- **Wear eye protection and rubber gloves when working around battery.**

The factory-installed battery is of non-refillable type. If the indicator turns white, do not charge the battery but replace it with new one.

Mishandling the battery shortens the service life and adds to maintenance costs.
The original battery is maintenance free, but needs some servicing.
If the battery is weak, the engine will be difficult to start and the lights will be dim. It is important to check the battery periodically.

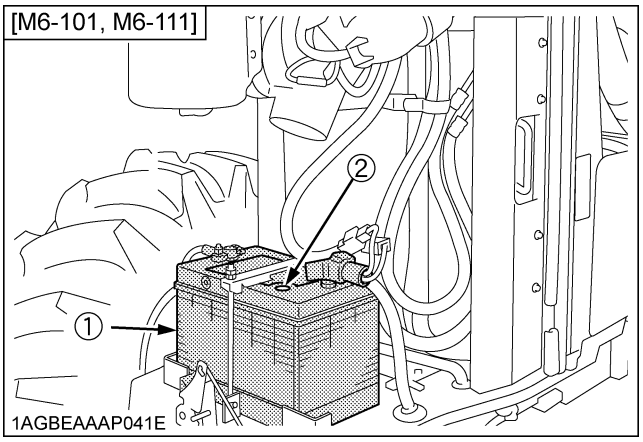

(1) Battery
(2) Indicator

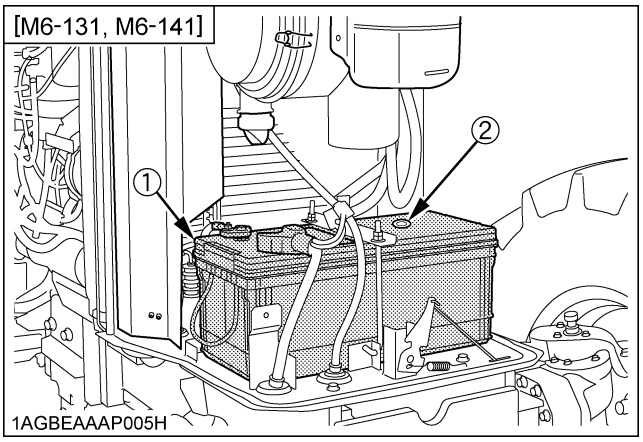

(1) Battery
(2) Indicator

◆ **How to read the indicator**

Check the battery condition by reading the indicator.

State of indicator display	
Green	Specific gravity of electrolyte and quality of electrolyte are both in good condition.
Black	Needs charging battery.
White	Needs replacing battery.

https://truckmanualshub.com/

◆ **Battery Charging**

WARNING

To avoid personal injury or death:

- **When the battery is being activated, hydrogen and oxygen gases in the battery are extremely explosive. Keep open sparks and flames away from the battery at all times, especially when charging the battery.**
- **When charging the battery, ensure the vent caps are securely in place. (if equipped)**
- **When disconnecting the cable from the battery, start with the negative terminal first.**
  When connecting the cable to the battery, start with the positive terminal first.
- **Never check battery charge by placing a metal object across the posts.**
  Use a voltmeter or hydrometer.

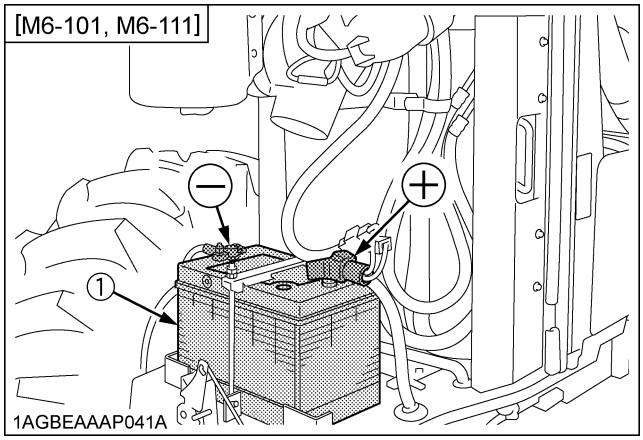

(1) Battery

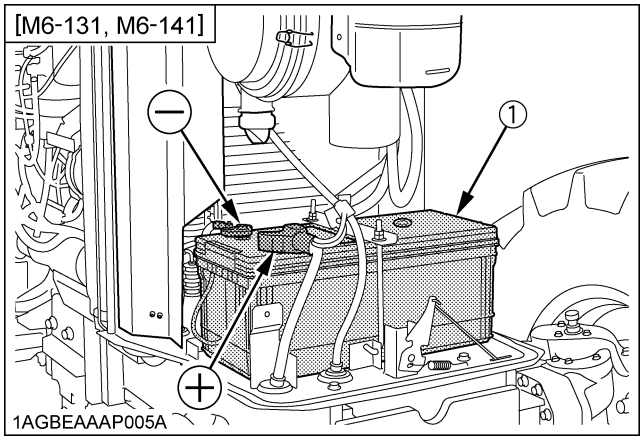

(1) Battery

1. To slow charge the battery, connect the battery positive terminal to the charger positive terminal and the negative to the negative, then recharge in the standard fashion.
2. A boost charge is only for emergencies. It will partially charge the battery at a high rate and in a short time. When using a boost-charged battery, it is necessary to recharge the battery as early as possible.
   Failure to do this will shorten the battery's service life.
3. The battery is charged if the indicator display turns green from black.
4. When exchanging an old battery for a new one, use battery of equal specification shown in **table 1**.

Table 1

Battery Type	Volts (V)	Capacity
GP31(105E41R)	12	80 (at 5H.R(A.H)) 100 (at 20H.R(A.H))
180G51	12	160 (at 20H.R(A.H))

Battery Type	Reserve Capacity (min)	Cold Cranking Amps	Normal Charging Rate (A)
GP31(105E41R)	160	900	11
180G51	300	1090	16

◆ **Direction for Storage**

1. When storing the tractor for long periods of time, remove the battery from tractor, adjust the electrolyte to the proper level and store in a dry place out of direct sunlight.
2. The battery self-discharges while it is stored.
   Recharge it once every 3 months in hot seasons and once every 6 months in cold seasons.

https://truckmanualshub.com/

■Adjusting Air-Conditioner Belt Tension
[M6-101, M6-111]

WARNING

To avoid personal injury or death:

- **Be sure to stop the engine before checking belt tension.**

Proper air-conditioner belt tension	A deflection of between 10 to 12 mm (0.4 to 0.48 in.) when the belt is pressed (98 N [10 kgf, 22.1 lbs.]) in the middle of the span.

1. Stop the engine and remove the key.
2. Apply moderate thumb pressure to belt between pulleys.
3. If tension is incorrect, loosen the tension pulley mounting nut and turn the adjusting bolt to adjust the belt tension within acceptable limits.
4. Replace air-conditioner belt if it is damaged.

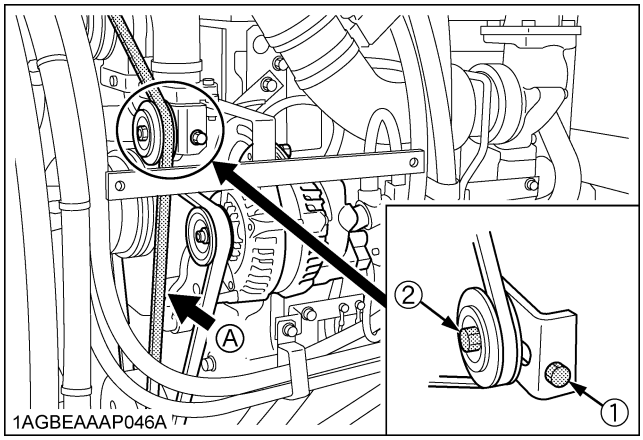

(1) Adjusting bolt
(2) Tension pulley mounting nut
(A) Check the belt tension

EVERY 200 HOURS

■Adjusting Toe-in

Proper toe-in	2 to 8 mm (0.08 to 0.31 in.)

1. Park tractor on a flat place.
2. Turn steering wheel so front wheels are in the straight ahead position.
3. Lower the implement, lock the park brake and stop the engine.
4. Measure distance between tire beads at front of tire, at hub height.
5. Measure distance between tire beads at rear of tire, at hub height.
6. Front distance should be shorter than rear distance. If not, adjust tie rod length.

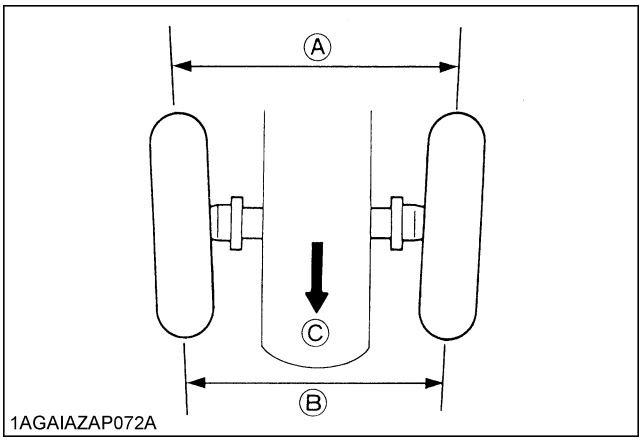

(A) Wheel - to - wheel distance at rear
(B) Wheel - to - wheel distance at front
(C) "FRONT"

◆ **Adjusting procedures**

1. Detach the snap ring.
2. Loosen the tie-rod nut.
3. Turn the tie-rod joint to adjust the rod length until the proper toe-in measurement is obtained.
4. Retighten the tie-rod nut.
5. Attach the snap ring of the tie-rod joint.

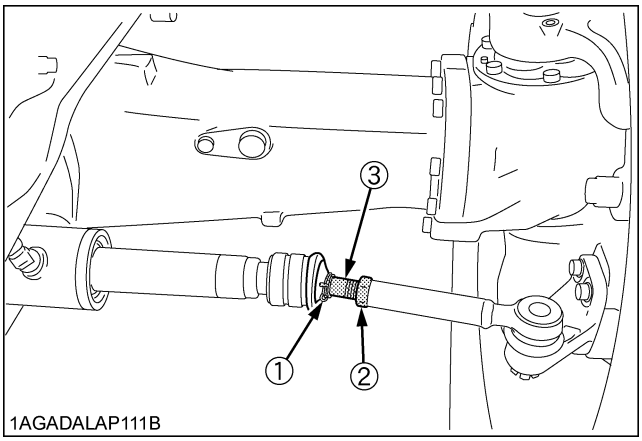

(1) Snap ring
(2) Tie-rod nut
(3) Tie-rod joint

https://truckmanualshub.com/

■Draining Fuel Tank Water

1. Loosen the drain plug at the bottom of the right fuel tank to let sediments, impurities and water out of the tank. Finally tighten up the plug.
2. Loosen 2 bolts and remove plate (left).
   Do the same for left side to drain them.
   Finally tighten up the plug and attach the plate (left).

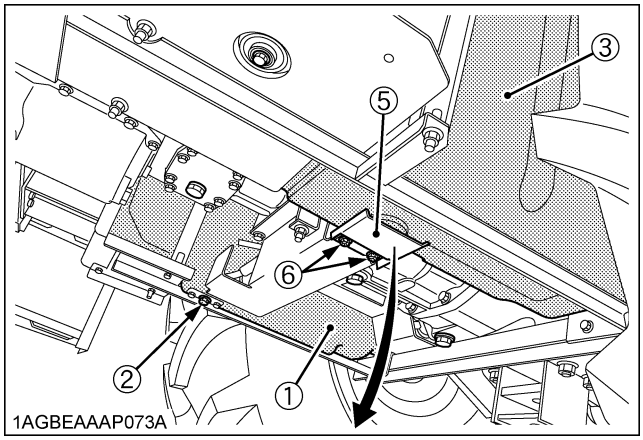

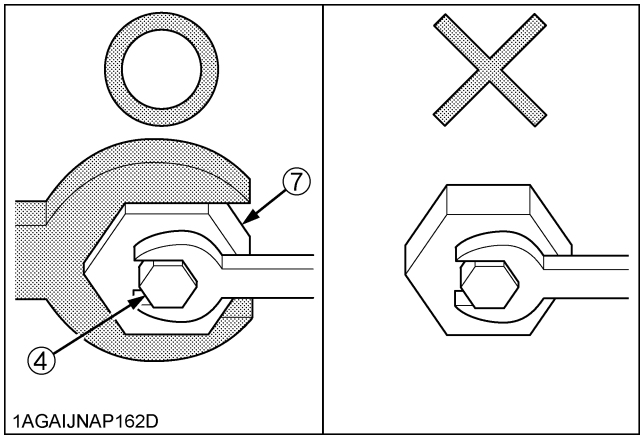

(1) Fuel Tank (Right)
(2) Drain plug (Right)
(3) Fuel Tank (Left)
(4) Drain plug with seal washer (Left)
(5) Plate (Left)
(6) Bolt
(7) Flange (Hex part)

◆ **Detaching and reattaching the drain plug (Left)**

In detaching and reattaching the drain plug, be sure to apply a wrench at the hex part of the flange to keep it in place. And detach or reattach the drain plug (bolt).

	Tightening torque
Drain plug (M10)	22.8 to 26.2 N-m (2.3 to 2.7 kgf-m, 16.8 to 19.3 ft-lbs)
Tank cover lock bolt (M8)	23.5 to 27.5 N-m (2.4 to 2.8 kgf-m, 17.3 to 20.3 ft-lbs)

IMPORTANT :

- If the fuel contains impurities, such as water, drain the fuel tank at shorter intervals.
- Drain the fuel tank before operating the tractor after a long period of storage.
- The fuel tank is made of plastic. Be careful not to overtighten the bolts.

■Cleaning Inner Air Filter

Remove the inner filter, and blow air from the direction opposite to the filter's normal air flow.

Pressure of compressed air must be under 205 kPa (2.1 kgf/cm^2, 30 psi).

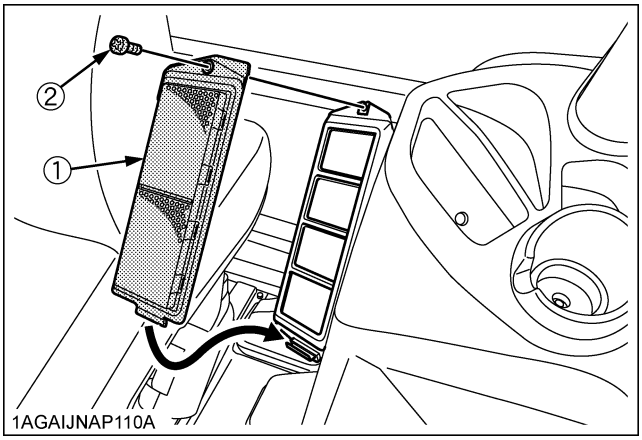

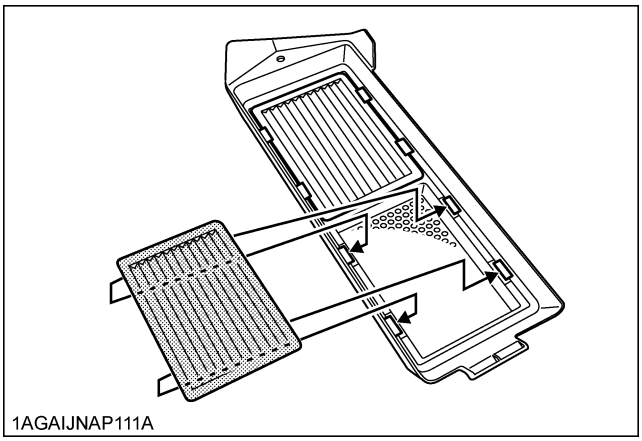

(1) Inner air filter
(2) Knob bolts

https://truckmanualshub.com/

■Cleaning Fresh Air Filter

WARNING

To avoid personal injury or death:

- **When removing and attaching the filter, apply parking brake, stop the engine and remove the key.**
- **Check the filter using the strong and stable ladder to stand on.**
  Never check it while standing on a tire or fender.

Remove the knob bolts and pull out filter.

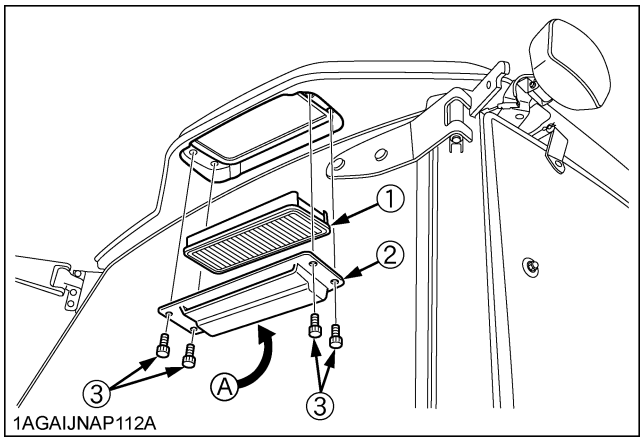

(1) Fresh air filter
(2) Cover
(3) Knob bolt
(A) Air inlet port

NOTE :

- Attach the filter and cover as the illustration above.

◆ **Cleaning the air filter**

- Normal use
  Blow air from the opposite direction to the filter's normal air flow.
  Pressure of compressed air must be under 205 kPa (2.1 kgf/cm^2, 30 psi).

IMPORTANT :

- Do not hit the filter. If the filter becomes deformed, dust may enter into the air-conditioner, which may cause damage and malfunction.

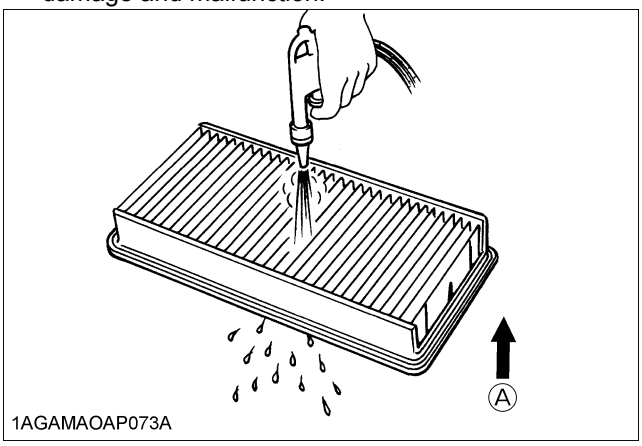

(A) "AIR CONDITIONER AIRFLOW"

NOTE :

- If the filter is very dirty:
  Dip the filter in lukewarm water with mild dish washing detergent.
  Move it up and down as well as left and right to loosen dirt. Rinse the filter with clean water and let it air-dry.

IMPORTANT :

- Do not use gasoline, thinner or similar chemicals to clean the filter as damage to the filter may occur.
- It may also cause an unpleasant odor in the CAB when the system is used next.

https://truckmanualshub.com/

EVERY 400 HOURS

■Checking Fan / Air-conditioner Belt Tension

[M6-131, M6-141]

WARNING

To avoid personal injury or death:

- **Be sure to stop the engine before checking belt tension.**

Proper belt tension	A deflection of between 9 to 11 mm (0.35 to 0.47 in.) when the belt is pressed (98 N [22.1 lbs]) in the middle of the span. (New belt: 7 to 9 mm [0.28 to 0.35 in.])

The belt is of self-tension type and needs no readjustment. Check the belt tension in the following procedure. If the deflection is out of spec or the belt itself is found damaged, replace it with new one.

1. Stop the engine and remove the key.
2. Press on the spot indicated in the figure below to measure the deflection.

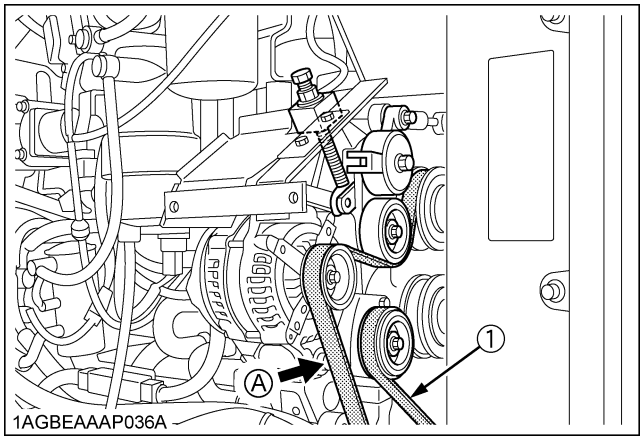

(1) Fan / Air-conditioner belt *(A) Check the belt tension*

◆ **Replacing the belt**

1. Loosen the lock nut first and then fully loosen the tension bolt.

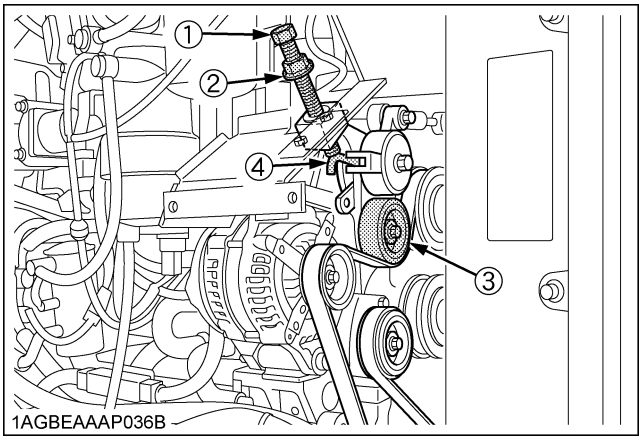

(1) Tension bolt
(2) Lock nut
(3) Self-tension pulley
(4) Self-tension spring

2. Lift the tension pulley and remove the belt.
3. Fit the new belt instead as shown below.
4. Tighten the tension bolt until the tension spring end comes in close contact with the engine body. Finally tighten up the lock nut.

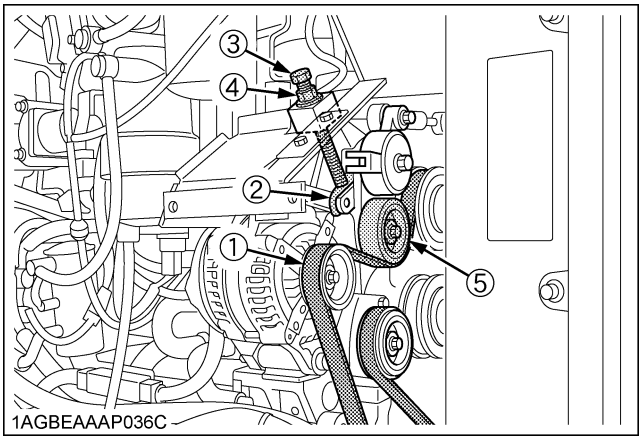

(1) Belt
(2) Tension spring end
(3) Tension bolt
(4) Lock nut
(5) Self-tension pulley

Tightening torque	Tension bolt	below 15 N-m (11.1 ft-lbs)
	Lock nut	123.6 to 147.1 N-m (91.2 to 108.5 ft-lbs)

https://truckmanualshub.com/

◆ **Fan / Air-conditioner Belt Routing**

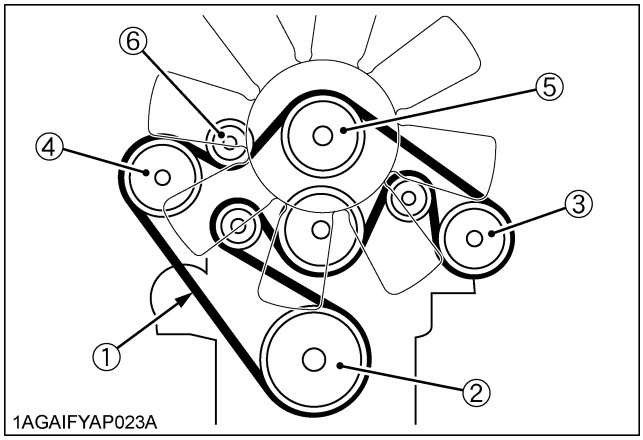

(1) Belt
(2) Drive pulley
(3) Air-conditioner compressor
(4) Alternator
(5) Fan pulley
(6) Self-tension pulley

■Cleaning Water Separator

[M6-101, M6-111]

This job should not be done in the field, but in a clean place.

1. Disconnect the connector of water sensor.
2. Close the fuel shutoff-valve.
3. Unscrew the cup and remove it, then rinse the inside with kerosene.
4. Take out the element and dip it in the kerosene to rinse.
5. After cleaning, reassemble the water separator, keeping out dust and dirt.
6. Connect the connector of water sensor.
7. Bleed the fuel system.
   (See "SERVICE AS REQUIRED" in "PERIODIC SERVICE" section.)

[M6-131, M6-141]

This job should not be done in the field, but in a clean place.

1. Disconnect the connector of water sensor.
2. Unscrew the cup and remove it, then rinse the inside with kerosene.
3. Take out the element and replace it with a new one.
4. After cleaning, reassemble the water separator, keeping out dust and dirt.
5. Connect the connector of water sensor.
6. Bleed the fuel system.
   (See "SERVICE AS REQUIRED" in "PERIODIC SERVICE" section.)

IMPORTANT :

- If a fuel element is broken, replace it with new one.

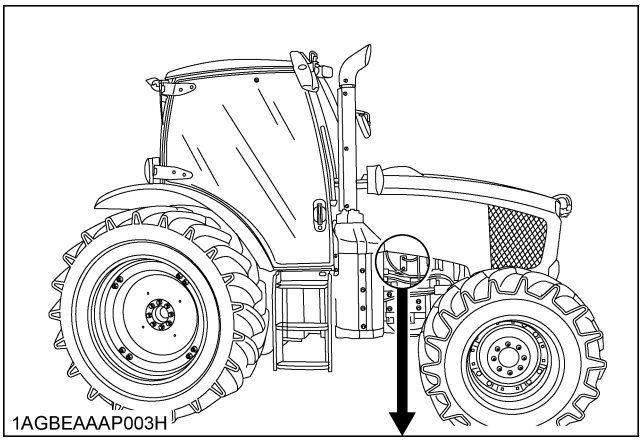

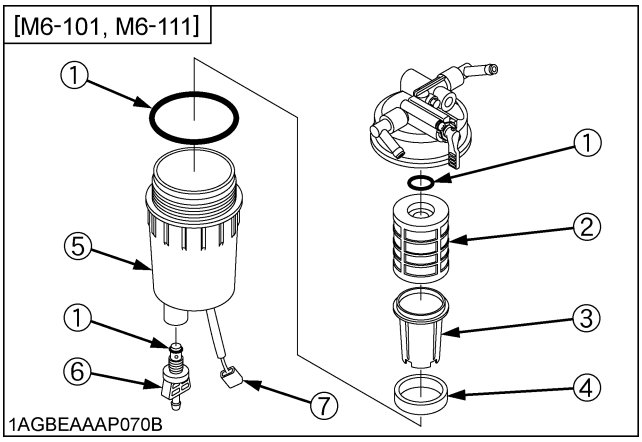

(1) O ring
(2) Element
(3) Element cup
(4) Red float
(5) Cup
(6) Drain plug
(7) Water sensor connector

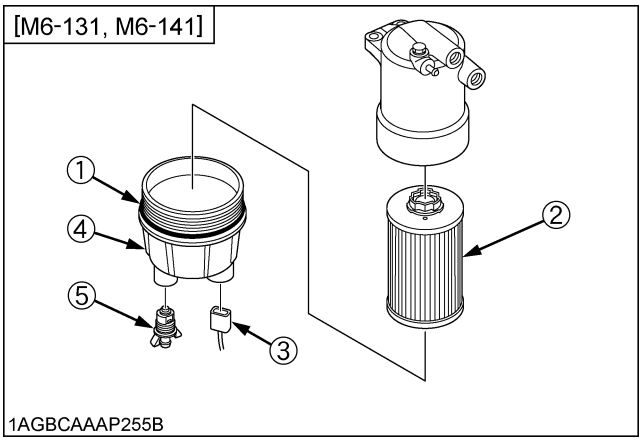

(1) O ring
(2) Element
(3) Water sensor connector
(4) Cup
(5) Drain plug

https://truckmanualshub.com/

IMPORTANT :
- If the water separator and/or fuel filter is not well maintained, the supply pump and injector may be damaged earlier than expected.

■Cleaning Fuel Solenoid Pump Element

1. Close the fuel shutoff-valve.
2. Unscrew the cover's nut and remove the cover from the fuel solenoid pump.
3. Remove the cover, magnet, and element and clean with kerosene.
4. Refer to the diagram below and reassemble the parts as they were before.
5. Open the fuel shutoff-valve.

IMPORTANT :
- When assembling the parts, be careful that no dirt or dust contacts them.
- Be sure to install the cover securely.
- After assembly, be sure to bleed the air from the fuel system. (See "Bleeding Fuel System" in "SERVICE AS REQUIRED" in "PERIODIC SERVICE".)

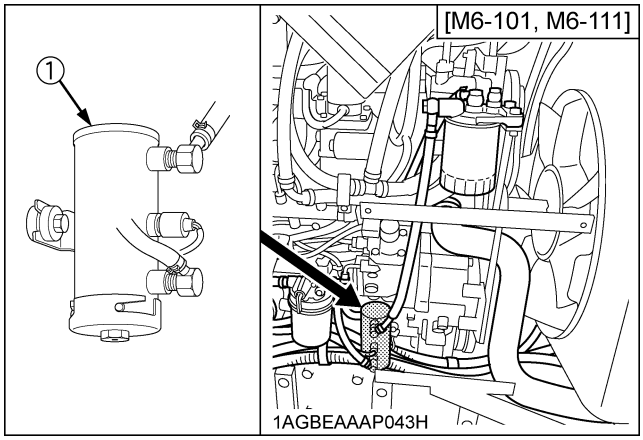

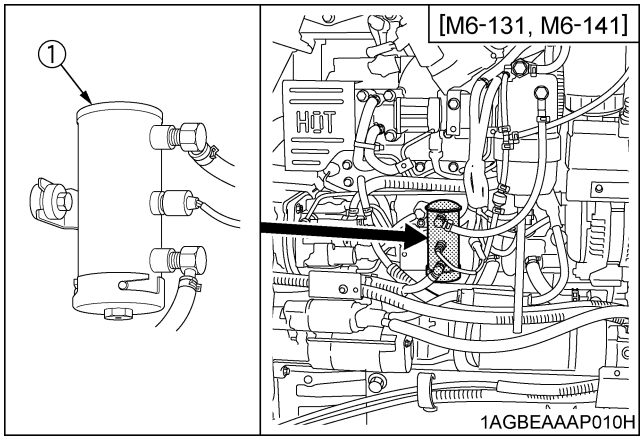

(1) Fuel solenoid pump

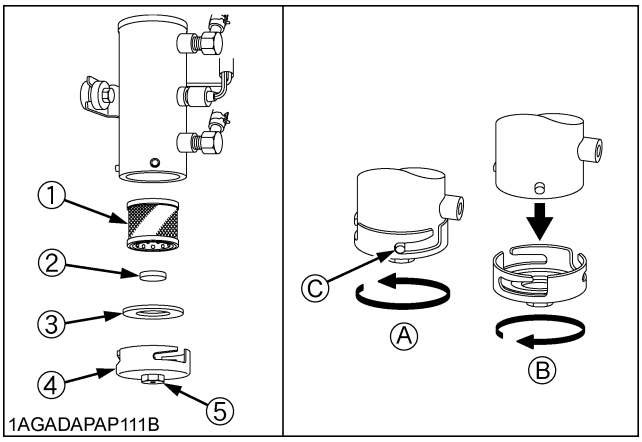

(1) Element
(2) Magnet
(3) Gasket
(4) Cover
(5) Nut

(A) "TIGHTEN"
(B) "LOOSEN"
(C) Pin
"Tighten the cover until the end of the slot contacts the pin."

EVERY 500 HOURS

■Changing Engine Oil

WARNING

To avoid personal injury or death:
- **Be sure to stop the engine before changing the oil.**
- **Allow engine to cool down sufficiently, oil can be hot and can burn.**

1. To drain the used oil, remove the drain plug at the bottom of the engine and drain the oil completely into the oil pan.
2. After draining reinstall the drain plug.
3. Fill with the new oil up to the upper notch on the dipstick.
   (See "LUBRICANTS" in "MAINTENANCE" section.)

Tractor model	Oil capacity with filter
M6-101, M6-111	10.5 L (11.1 U.S.qts.)
M6-131, M6-141	14.6 L (15.4 U.S.qts.)

IMPORTANT :
- Use DPF-compatible oil (CJ-4) for the engine.

https://truckmanualshub.com/

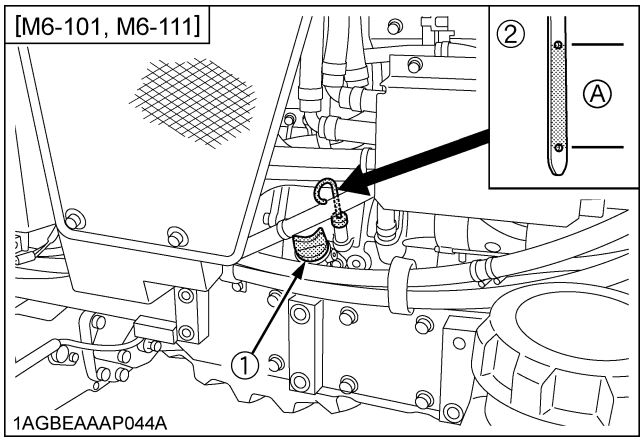

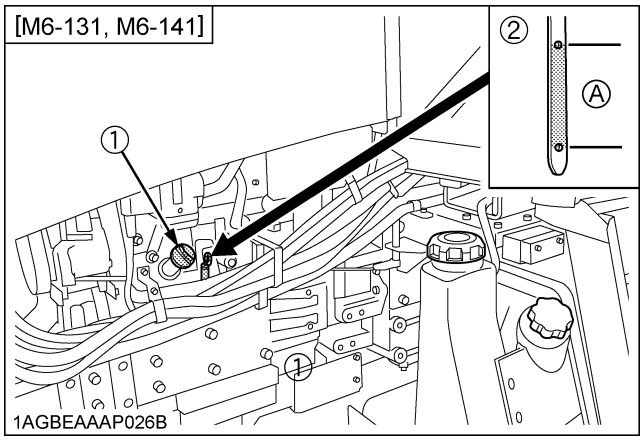

(1) Oil inlet (A) Oil level is acceptable within this range
(2) Dipstick

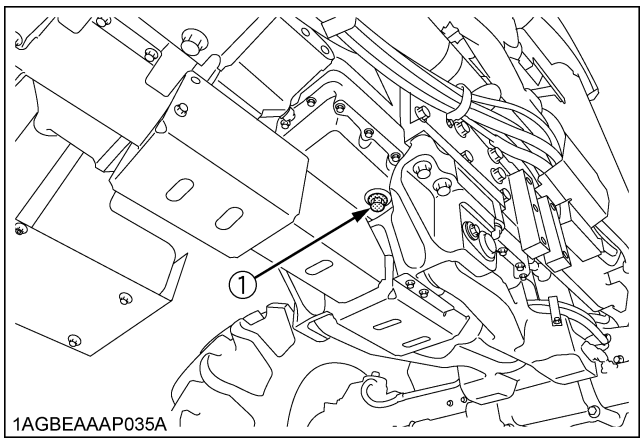

(1) Drain plug

■Replacing Engine Oil Filter

WARNING

To avoid personal injury or death:

- **Be sure to stop the engine before replacing the oil filter cartridge.**
- **Allow engine to cool down sufficiently, oil can be hot and can burn.**

1. Remove the oil filter.
2. Put a film of clean engine oil on the rubber seal of the new filter.
3. Tighten the filter quickly until it contacts the mounting surface.
   Tighten filter by hand an additional 1/2 turn only.
4. After the new filter has been replaced, the engine oil normally decreases a little. Make sure that the engine oil does not leak through the seal and be sure to check the oil level on the dipstick. Then, replenish the engine oil up to the prescribed level.

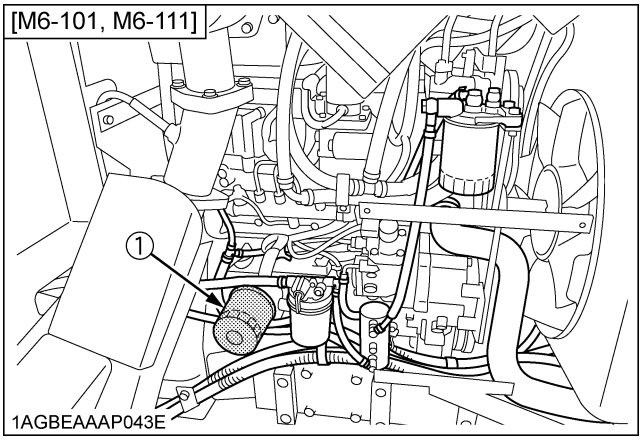

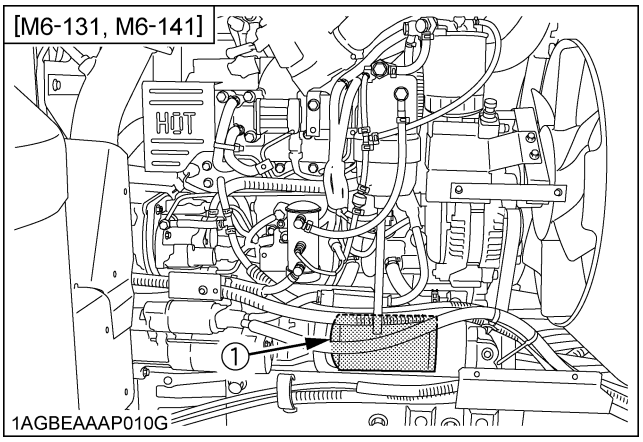

(1) Engine oil filter

IMPORTANT :

- To prevent serious damage to the engine, use only a KUBOTA genuine filter.

https://truckmanualshub.com/

■Cleaning Pre-Fuel Filter

[M6-131, M6-141]

This job should not be done in the field, but in a clean place.

1. Close the fuel shutoff-valve.
2. Unscrew the retainer ring and remove the cup, and rinse the inside with kerosene.
3. Take out the element and dip it in the kerosene to rinse.
4. After cleaning, reassemble the pre-fuel filter, keeping out dust and dirt.
5. Bleed the fuel system.
   (See "Bleeding Fuel System" in "SERVICE AS REQUIRED" in "PERIODIC SERVICE" section.)

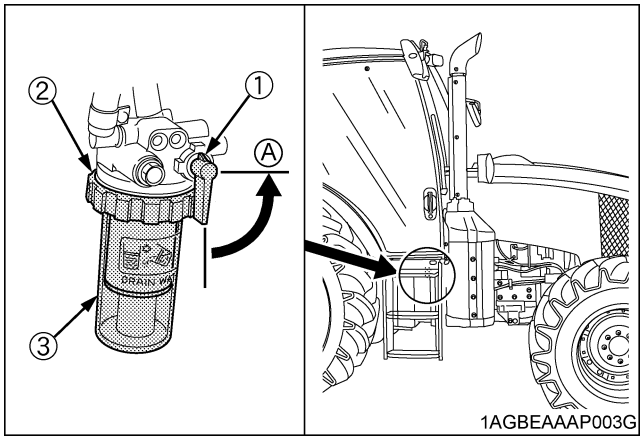

(1) Fuel shutoff-valve *(A) "CLOSE"*
(2) Retainer ring
(3) Cup

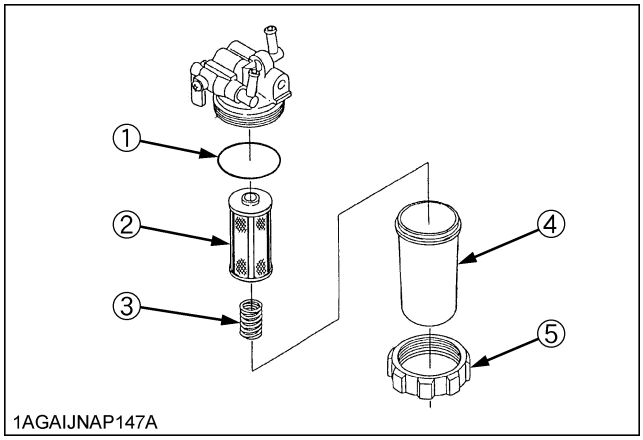

(1) O ring
(2) Element
(3) Spring
(4) Cup
(5) Retainer ring

■Replacing Fuel Filter

1. Remove the fuel filter.
2. Put a film of clean fuel on rubber seal of new filter.
3. Tighten the filter quickly until it contacts the mounting surface.
   Tighten filter by hand an additional 1/2 turn only.
4. Bleed the fuel system.
   (See "Bleeding Fuel System" in "SERVICE AS REQUIRED" in "PERIODIC SERVICE" section.)

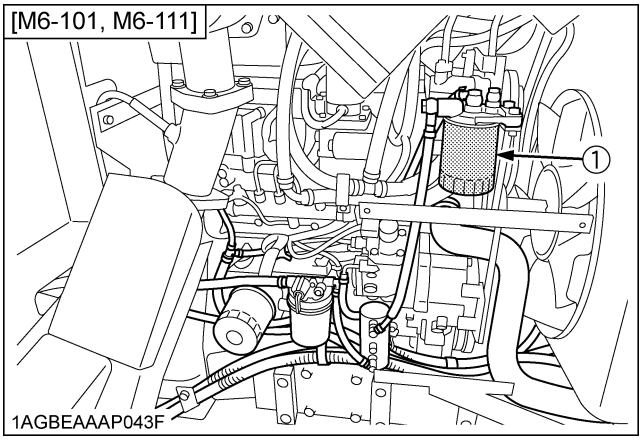

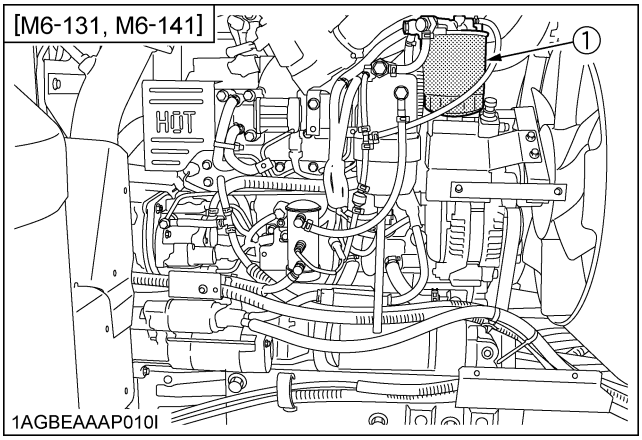

(1) Fuel filter

https://truckmanualshub.com/

■Replacing Hydraulic Oil Filter

◆ Cleaning Magnetic Filter

WARNING

To avoid personal injury or death:

- **Be sure to stop the engine before changing the oil filter cartridge.**
- **Allow engine to cool down sufficiently, oil can be hot and can burn.**

1. Remove the drain plug at the bottom of the transmission case and drain the oil completely into an oil pan.
2. After draining reinstall the drain plug.

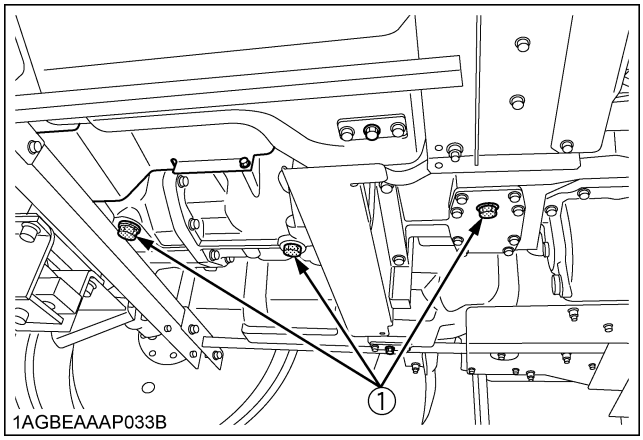

(1) Drain plug

3. Loosen 3 bolts and remove the cover.

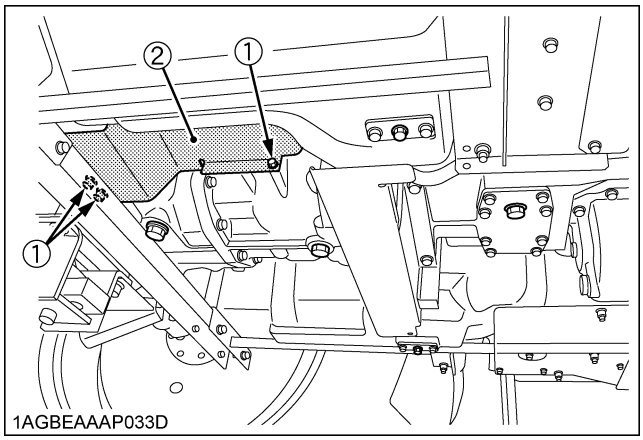

(1) Bolt
(2) Cover

4. Remove the oil filter.
5. Wipe off metal filings from the magnetic filter with a clean rag.

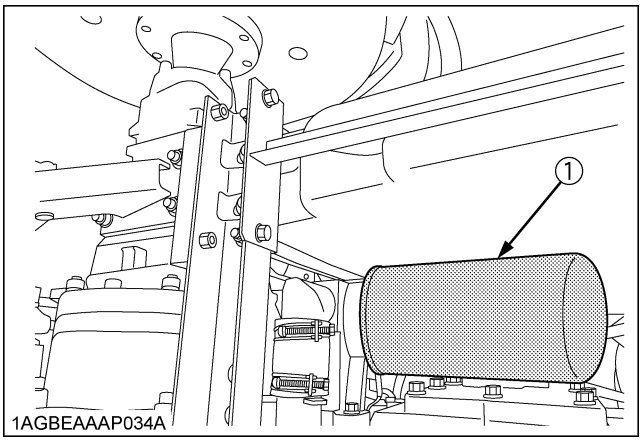

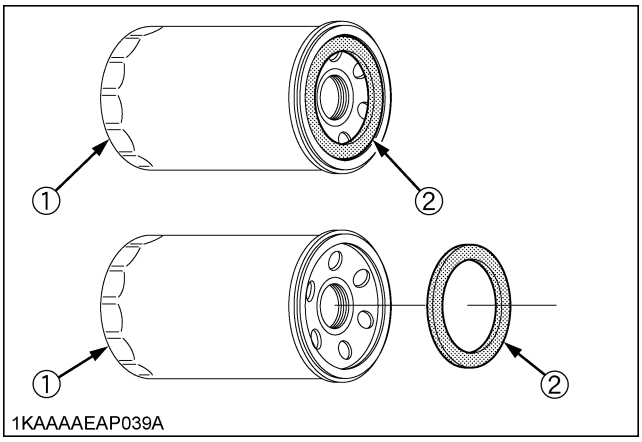

(1) Hydraulic oil filter
(2) Magnetic filter (Wipe off metal filings)

6. Put a film of clean transmission oil on the rubber seal of the new filter.
7. Tighten the filter quickly until it contacts the mounting surface.
   Tighten filter by hand an additional 1/2 turn only.
8. After the new filter has been replaced, fill the transmission oil up to the upper notch on the dipstick.

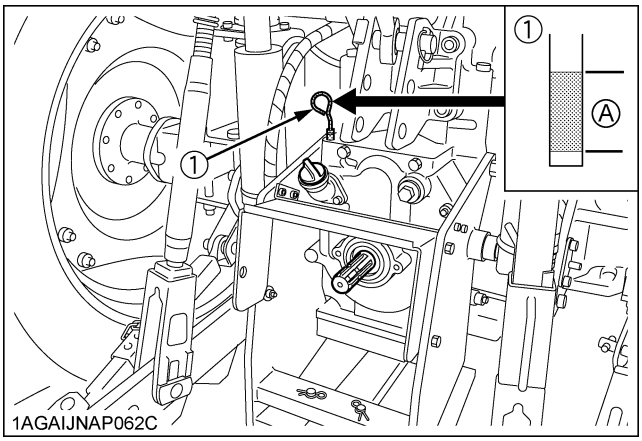

(1) Dipstick *(A) Oil level is acceptable within this range*

https://truckmanualshub.com/

9. After running the engine for a few minutes, stop the engine and check the oil level again, add oil to the prescribed level.
10. Make sure that the transmission fluid doesn't leak pass the seal on the filter.

IMPORTANT :
- To prevent serious damage to the hydraulic system, use only a KUBOTA genuine filter.

■Checking Power Steering Line

1. Check to see that all lines and hose clamps are tight and not damaged.
2. If hoses and clamps are found worn or damaged, replace or repair them at once.

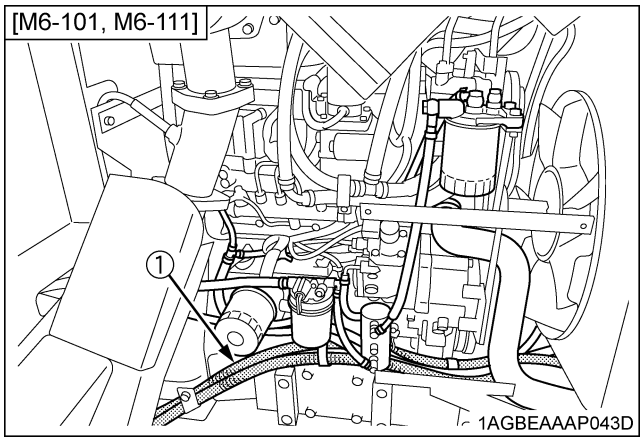

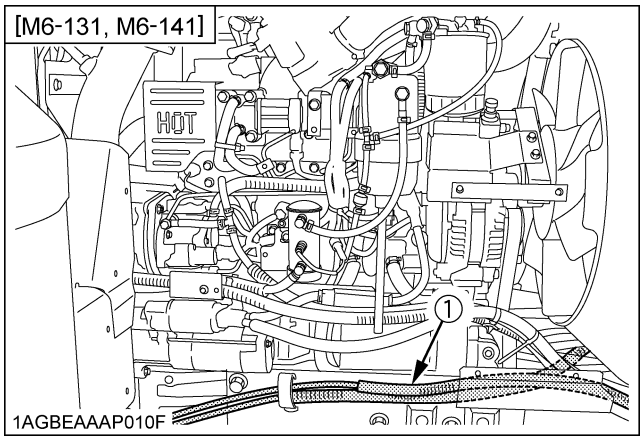

(1) Power steering pressure hoses

■Checking Radiator Hose and Clamp

Check to see if radiator hoses are properly fixed every 500 hours of operation.

1. If hose clamps are loose or water leaks, tighten bands securely.
2. Replace hoses and tighten hose clamps securely, if radiator hoses are swollen, hardened or cracked.

Replace hoses and hose clamps every 4 years or earlier if checked and found that hoses are swollen, hardened or cracked.

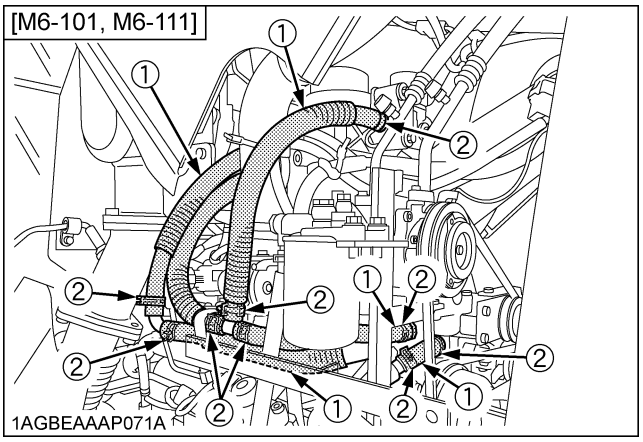

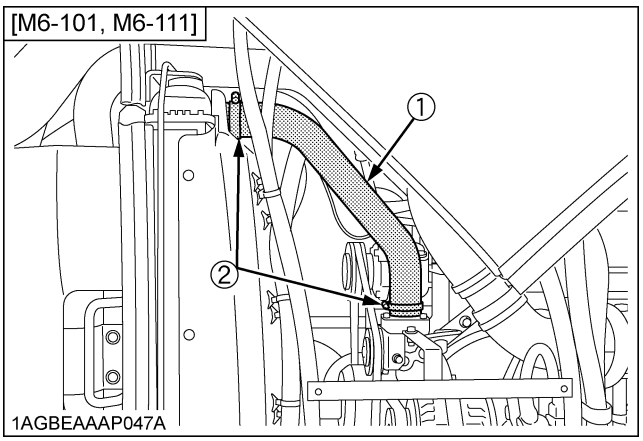

https://truckmanualshub.com/

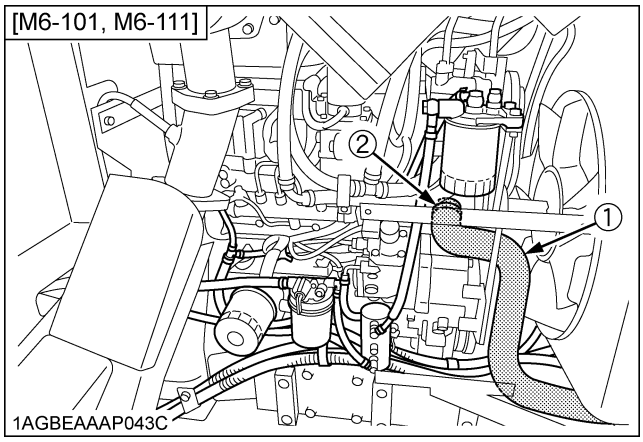

(1) Radiator hoses
(2) Hose clamps

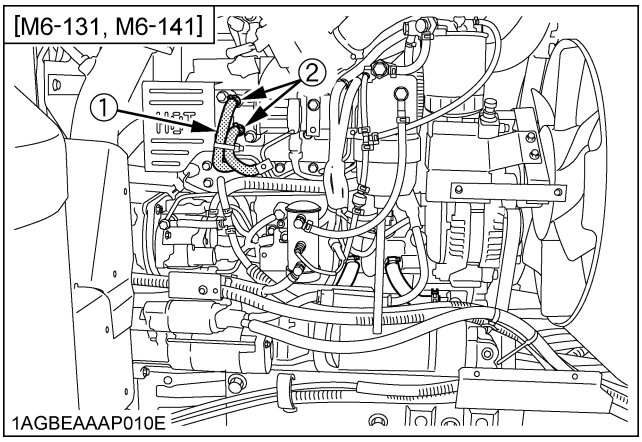

(1) Radiator hoses
(2) Hose clamps

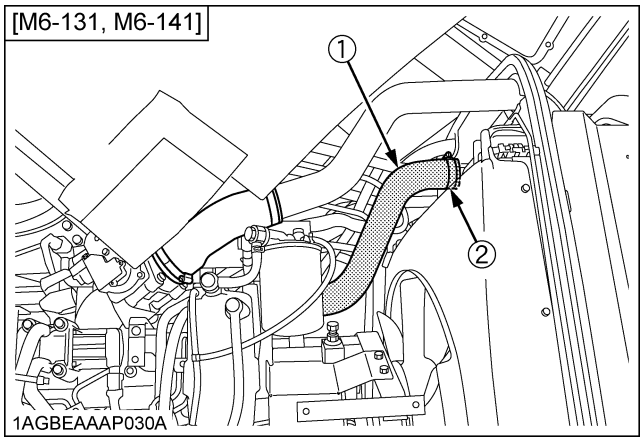

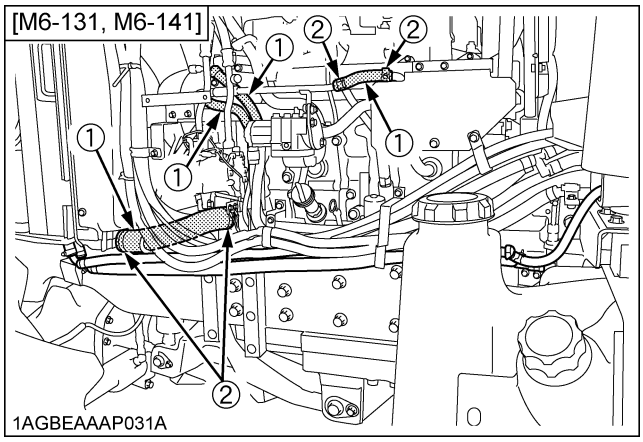

◆ **Precaution at Overheating**

Take the following actions in the event the coolant temperature is nearly or more than the boiling point, what is called "Overheating"

1. Park the tractor in a safe place and keep the engine unloaded idling.
2. Don't stop the engine suddenly, but stop it after about 5 minutes of unloaded idling.
3. Keep yourself well away from the machine for further 10 minutes or while the steam blows out.
4. Check that there are no dangers such as burns. Get rid of the causes of overheating according to the manual, see "TROUBLESHOOTING" section, and then, start again the engine.

https://truckmanualshub.com/

■Checking Fuel Line

1. Check to see that all lines and hose clamps are tight and not damaged.
2. If hoses and clamps are found worn or damaged, replace or repair them at once.

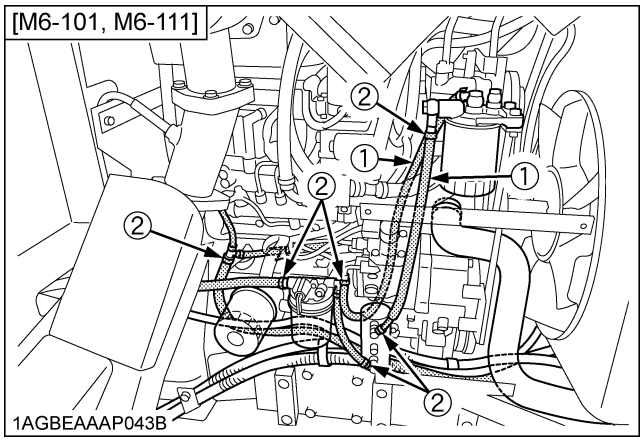

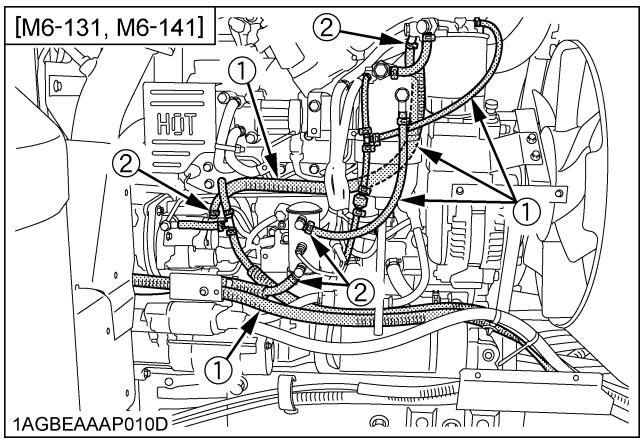

(1) Fuel lines
(2) Clamp bands

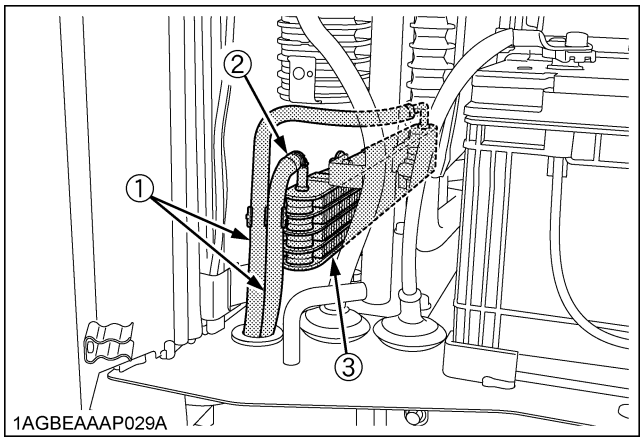

(1) Fuel lines
(2) Clamp bands
(3) Fuel cooler

NOTE :

- If the fuel line is removed, be sure to properly bleed the fuel system.
  (See "Bleeding Fuel System" in "SERVICE AS REQUIRED" in "PERIODIC SERVICE" section.)

■Checking Intake Air Line

1. Check to see that hoses and hose clamps are tight and not damaged.
2. If hoses and clamps are found worn or damaged, replace or repair them at once.

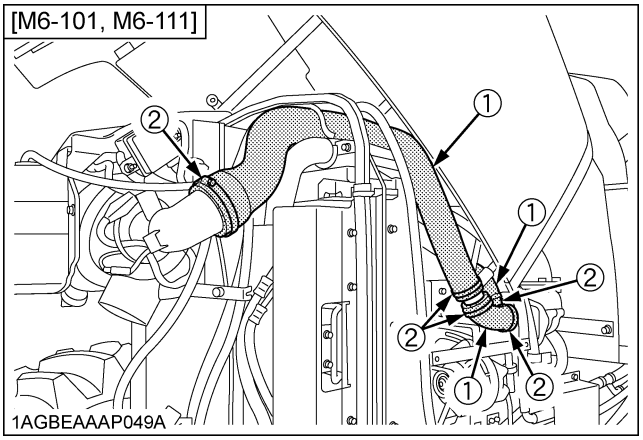

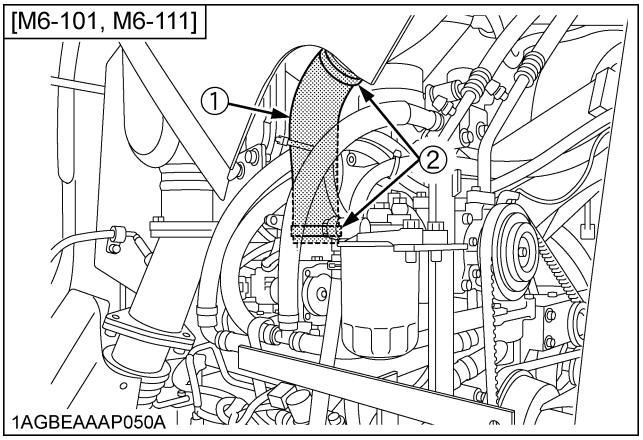

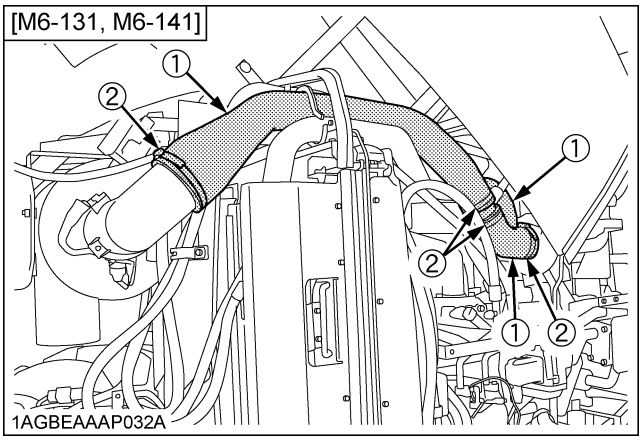

https://truckmanualshub.com/

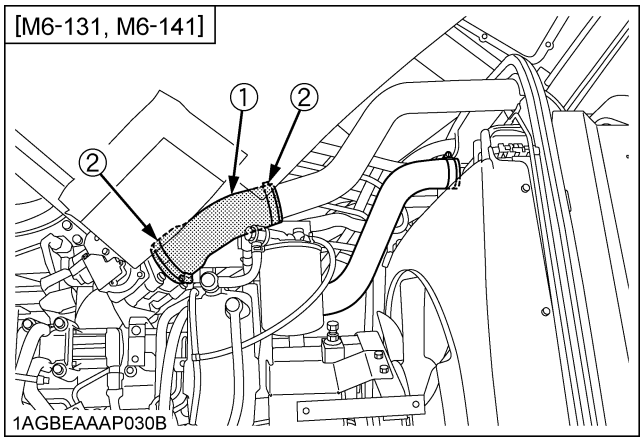

(1) Hose
(2) Hose clamps

■Checking Oil Cooler Line

1. Check to see that all lines and hose clamps are tight and not damaged.
2. If hoses and clamps are found worn or damaged, replace or repair them at once.

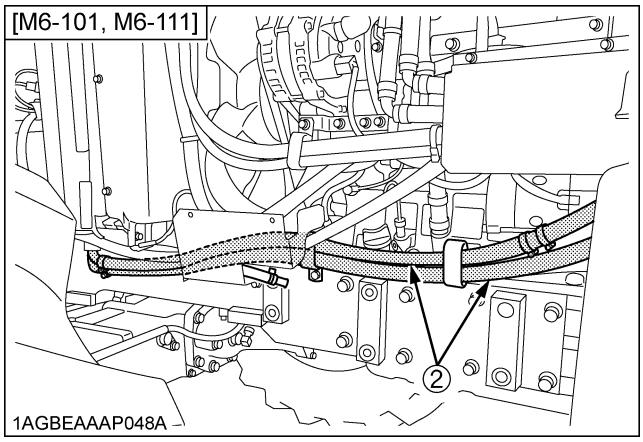

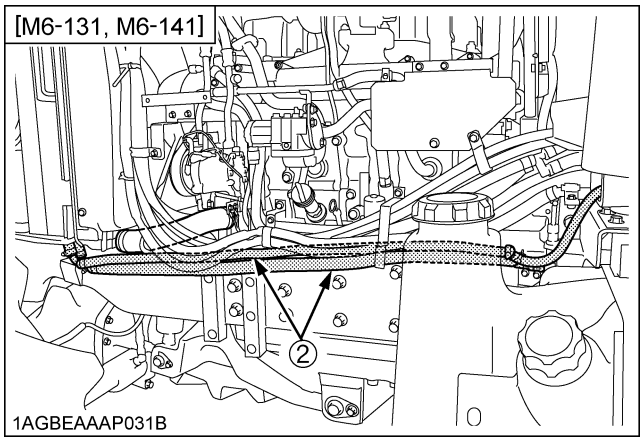

(1) Oil cooler line

■Adjusting Power Shift

If the power shift is not calibrated, driving will be uncomfortable.

Consult your local KUBOTA Dealer for this service.

Have the following 5 items calibrated.

1. Main shift clutch [Mode "2"]
2. Master clutch [Mode "3"]
3. Solenoid proportional pressure reducing valve (Master) [Mode "5"]
4. Solenoid proportional pressure reducing valve (Main shift L) [Mode "6"]
5. Solenoid proportional pressure reducing valve (Main shift H) [Mode "7"]

■Checking Air Conditioner Pipe and Hose

1. Check to see that all lines and hose clamps are tight and not damaged.
2. If hoses and clamps are found worn or damaged, consult your local KUBOTA Dealer for this service.

EVERY 600 HOURS

■Adjusting Front Axle Pivot

If the front axle pivot pin adjustment is not correct, front wheel vibration can occur causing vibration in the steering wheel.

◆ Adjusting procedure

Loosen the lock nut, screw-in the adjusting screw until seated, then tighten the screw with an additional 1/6 turn. Re-tighten the lock nut.

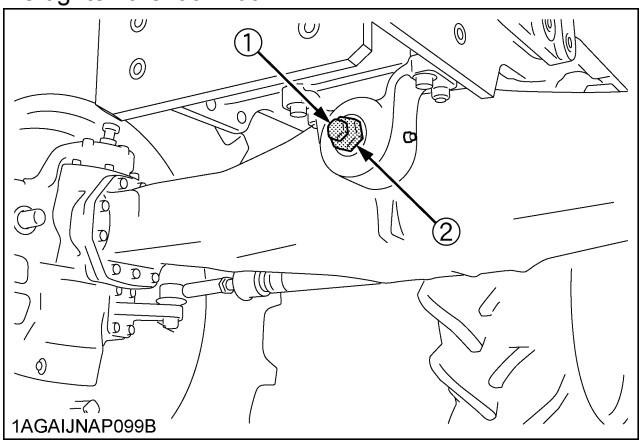

(1) Adjusting screw
(2) Lock nut

https://truckmanualshub.com/

■Adjusting King-pin Pivot

Loosen the lock nut and tighten the adjusting screw with following torque:

Adjusting screw	4.9 to 9.8 N-m, 3.6 to 7.2 ft-lbs
Lock nut	98.1 to 147 N-m, 72.4 to 108.4 ft-lbs

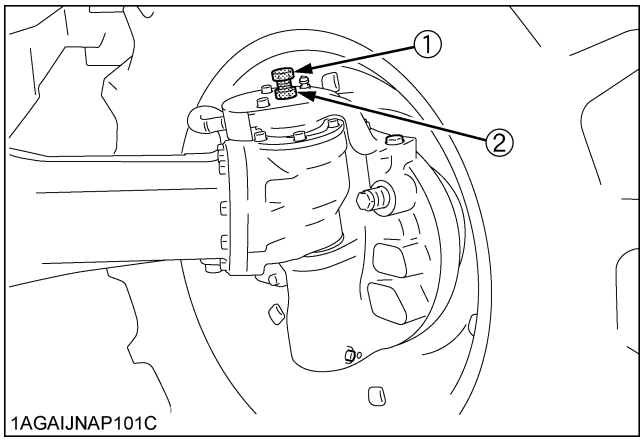

(1) Adjusting screw
(2) Lock nut

EVERY 1000 HOURS

■Changing Transmission Fluid

WARNING

To avoid personal injury or death:

- **Allow engine to cool down sufficiently, oil can be hot and can burn.**

1. To drain the used oil, remove the drain plug at the bottom of the transmission case and drain the oil completely into the oil pan.
   Clean the magnetic plug with rags.
2. After draining reinstall the drain plug.
3. Fill with the new KUBOTA SUPER UDT fluid up to the upper notch on the dipstick.
   (See "LUBRICANTS" in "MAINTENANCE" section.)
4. After running the engine for a few minutes, stop it and check the oil level again; add oil to prescribed level.

Oil capacity	65 L (68.7 U.S.qts)

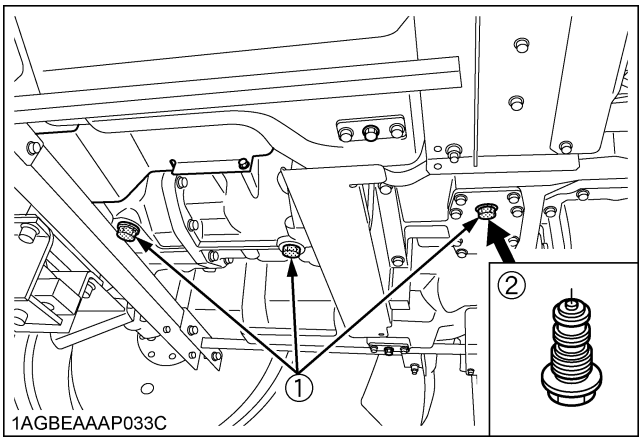

(1) Drain plugs
(2) Magnetic plug (wipe off metal filings)

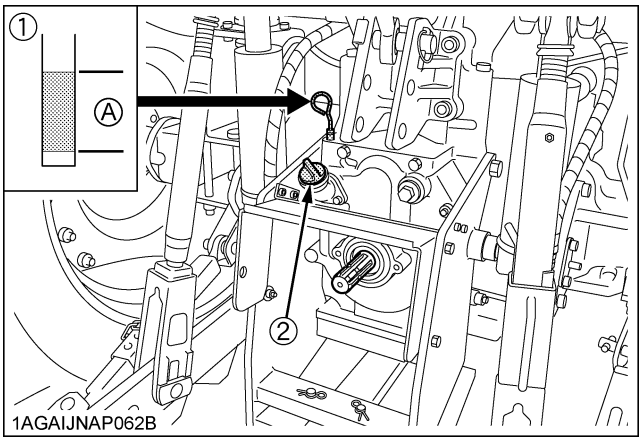

(1) Dipstick
(2) Oil filling plug
(A) Oil level is acceptable within this range

IMPORTANT :

- Do not operate the tractor immediately after changing the transmission fluid.
  Run the engine at medium speed for a few minutes to prevent damage to the transmission.

https://truckmanualshub.com/

■Changing Front Differential Case Oil

1. To drain the used oil, remove the drain and filling plug at the front differential case and drain the oil completely into the oil pan.
2. After draining reinstall the drain plug.
3. Remove the oil level check plug.
4. Fill with the new oil up to the lower rim of check plug port.
   (See "LUBRICANTS" in "MAINTENANCE" section.)
5. After filling reinstall the filling plug and check plug.

Tractor model	Oil capacity
M6-101, M6-111	7 L (7.4 U.S.qts.)
M6-131, M6-141	13 L (13.7 U.S.qts.)

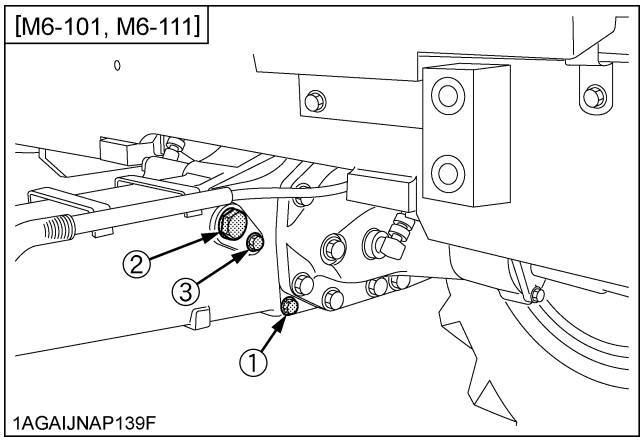

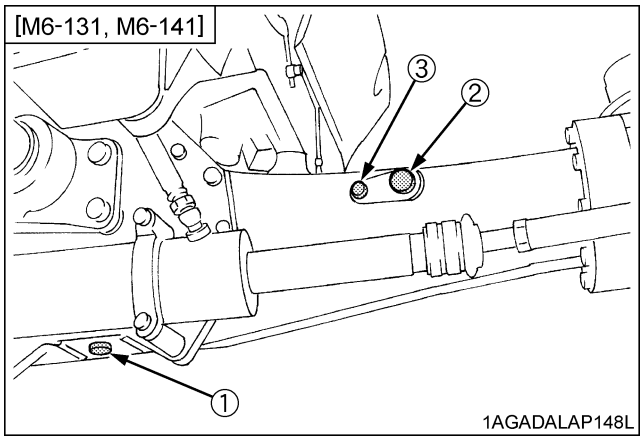

(1) Drain plug
(2) Filling plug
(3) Check plug

■Changing Front Axle Gear Case Oil

1. To drain the used oil, remove the right and left drain plugs and filling plugs at the front axle gear case and drain the oil completely into the oil pan.
2. After draining reinstall the drain plugs.
3. Fill with the new oil up to the filling plug port.
   (See "LUBRICANTS" in "MAINTENANCE" section.)
4. After filling reinstall the filling plugs.

Tractor model	Oil capacity for each side
M6-101, M6-111	3.5 L (3.7 U.S.qts.)
M6-131, M6-141	4.5 L (4.8 U.S.qts.)

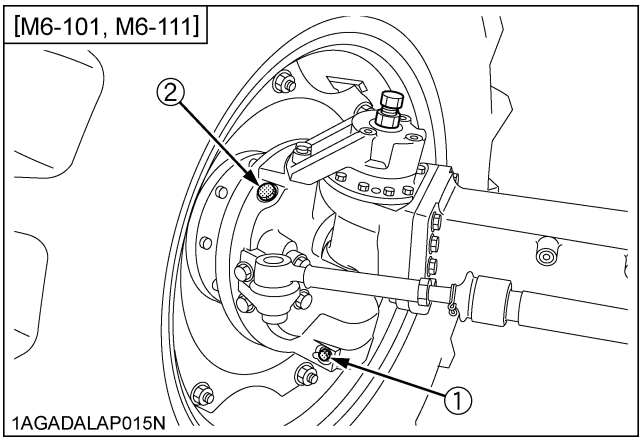

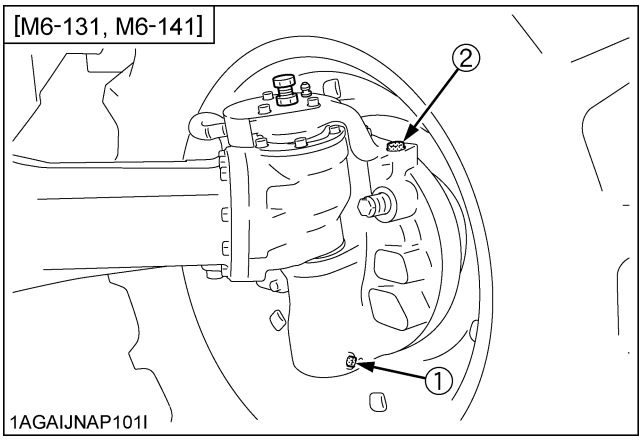

(1) Drain plug
(2) Filling plug

■Adjusting Engine Valve Clearance

Consult your local KUBOTA Dealer for this service.

https://truckmanualshub.com/

EVERY 1000 HOURS or 1 YEAR

Be sure to do the following servicing once every 1000 hours or yearly, whichever comes first.

■Replacing Air Cleaner Primary Element and Secondary Element

(See "Cleaning Air Cleaner Primary Element" in "EVERY 100 HOURS" in "PERIODIC SERVICE" section.)

■Checking Exhaust Manifold

Consult your local KUBOTA Dealer for this service.

EVERY 1500 HOURS

■Cleaning Fuel Injector Nozzle Tip

Consult your local KUBOTA Dealer for this service.

■Checking DEF/AdBlue® Injector Tip

Consult your local KUBOTA Dealer for this service.

■Checking DEF/AdBlue® Line

1. Check to see that all lines from the DEF/AdBlue® injector to the tank are securely connected and not damaged.
2. If hoses and clamps are found worn or damaged, replace or repair them at once.

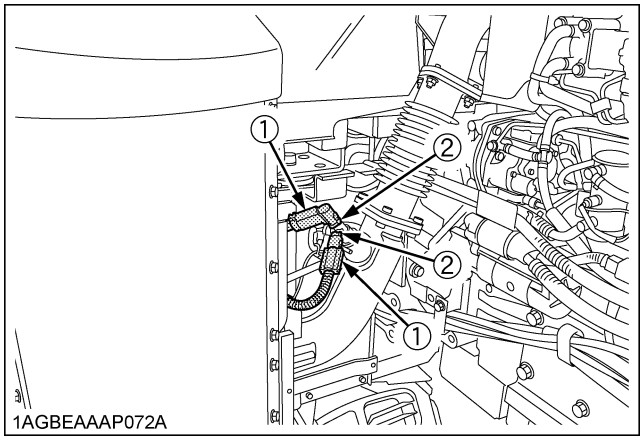

(1) DEF/AdBlue® lines
(2) Clamp bands

■Replacing Oil Separator Element

WARNING

To avoid personal injury or death:

- **Be sure to stop the engine before replacing the oil separator element.**

1. Remove the cover and take out the element. Wipe off oil and the carbon in the case with a clean rag.
2. Fit a new oil separator element.
3. Tighten the cover.

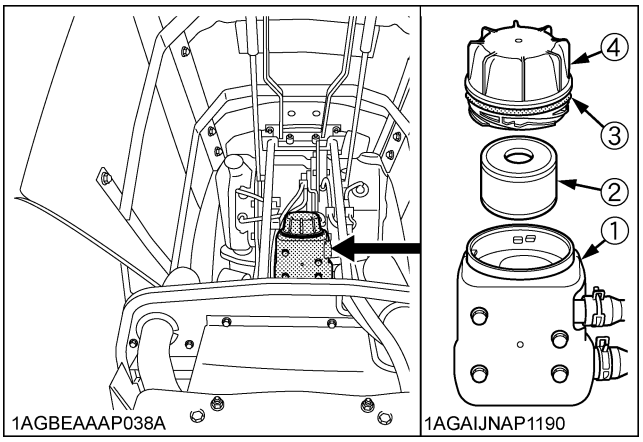

(1) Body
(2) Oil separator element
(3) Gasket
(4) Cover

■Checking PCV (Positive Crankcase Ventilation) Valve

Consult your local KUBOTA Dealer for this service.

■Checking and Cleaning EGR Cooler

Consult your local KUBOTA Dealer for this service.

■Checking Accumulator

[Front suspension type]

Consult your local KUBOTA Dealer for this service.

https://truckmanualshub.com/

EVERY 2000 HOURS or 2 YEARS

Be sure to do the following servicing once every 2000 hours or biennially, whichever comes first.

■Flushing Cooling System and Changing Coolant

WARNING

To avoid personal injury or death:

- **Do not remove radiator cap while coolant is hot. When cool, slowly rotate cap to the first stop and allow sufficient time for excess pressure to escape before removing the cap completely.**

1. Stop the engine and let it cool down.
2. To drain the coolant, loosen the clamp band and remove the drain plug and remove the radiator cap. The radiator cap must be removed to completely drain the coolant.
3. After all coolant is drained, install the drain plug securely.
4. Fill with clean soft water and cooling system cleaner.
5. Follow directions of the cleaner instruction.
6. After flushing, fill with clean soft water and anti-freeze until the coolant level is just below the port.
7. Fill with clean water and anti-freeze up to the upper line of recovery tank.
8. Install the radiator cap securely.
9. Start and operate the engine for a few minutes.
10. Stop the engine. Check coolant level and add coolant if necessary.
11. Properly dispose of used coolant.

Tractor model	Coolant capacity
M6-101, M6-111	11.5 L (12.2 U.S.qts.)
M6-131, M6-141	15.9 L (16.8 U.S.qts.)

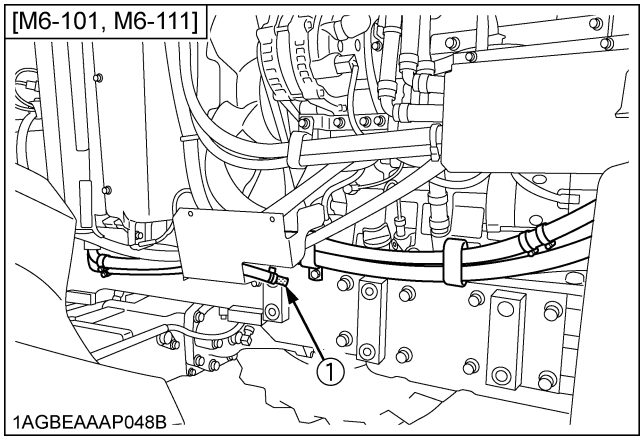

(1) Drain plug

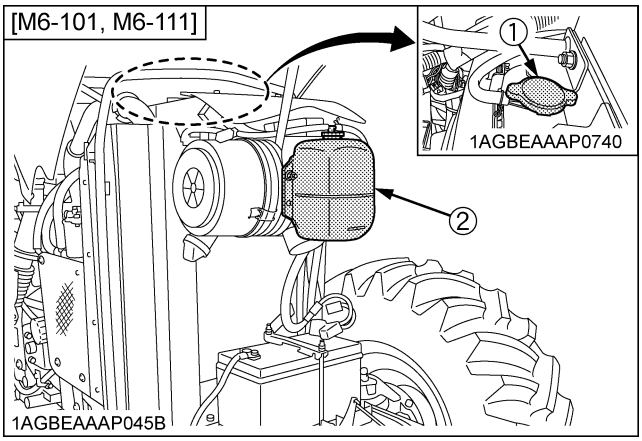

(1) Radiator cap
(2) Recovery tank

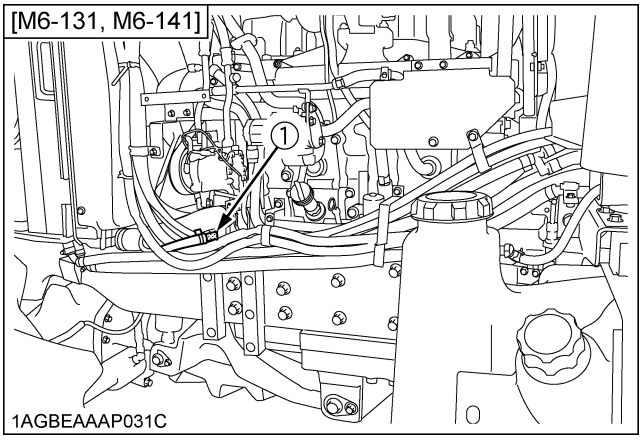

(1) Drain plug

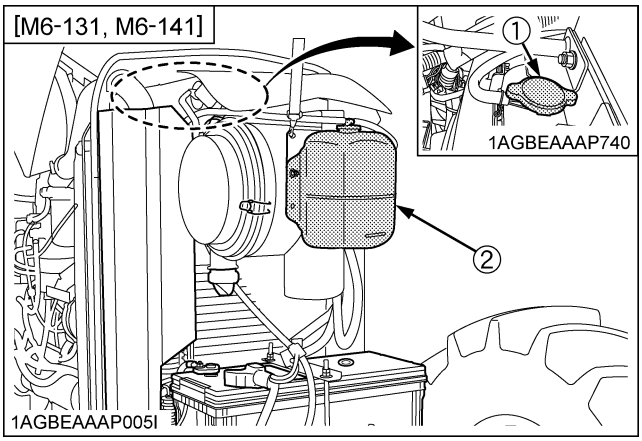

(1) Radiator cap
(2) Recovery tank

https://truckmanualshub.com/

IMPORTANT :
- Do not start engine without coolant.
- Use clean, fresh soft water and anti-freeze to fill the radiator and recovery tank.
- When mixing the anti-freeze with water, the anti-freeze mixing ratio is 50 %.
- Securely tighten radiator cap. If the cap is loose or improperly fitted, water may leak out and the engine could overheat.

NOTE :
- On cab type machines, coolant circulates through the heater. This means that one more liter or so of coolant is required.
  In changing coolant, pour coolant up to the filler port of the recovery tank. Turn ON the heater (shift the temperature control dial toward WARM), and run the engine for a while in order to warm coolant. Then stop the engine.
  When coolant has cooled down, some of the coolant in the recovery tank is sucked. Now the recovery tank is appropriately filled with coolant.

■Anti-Freeze

WARNING

To avoid personal injury or death:
- **When using antifreeze, put on some protection such as rubber gloves. (Antifreeze contains poison.)**
- **If it is swallowed, seek immediate medical help. Do NOT make a person throw up unless told to do so by poison control or a health care professional. Use standard first aid and CPR for signs of shock or cardiac arrest. Call your local Poison Control Center or your local emergency number for further assistance.**
- **When antifreeze comes in contact with the skin or clothing, wash it off immediately.**
- **Do not mix different types of Antifreeze.**
  The mixture can produce chemical reaction causing harmful substances.
- **Antifreeze is extremely flammable and explosive under certain conditions. Keep fire and children away from antifreeze.**
- **When draining fluids from the engine, place some container underneath the engine body.**
- **Do not pour waste onto the ground, down a drain, or into any water source.**
- **Also, observe the relevant environmental protection regulations when disposing of antifreeze.**

Always use a 50/50 mix of long-life coolant and clean soft water in KUBOTA engines.
Consult your local KUBOTA Dealer concerning coolant for extreme conditions.

1. Long-life coolant (hereafter LLC) comes in several types. Use ethylene glycol (EG) type for this engine.
2. Before employing LLC-mixed cooling water, fill the radiator with fresh water and empty it again.
   Repeat this procedure 2 or 3 times to clean up the inside.
3. Mixing the LLC
   Premix 50% LLC with 50% clean soft water. When mixing, stir it up well, and then fill into the radiator.
4. The procedure for the mixing of water and antifreeze differs according to the make of the antifreeze and the ambient temperature. Refer to SAE J1034 standard, more specifically also to SAE J814c.

Vol % Anti-freeze	Freezing Point		Boiling Point*	
	℃	℉	℃	℉
50	-37	-34	108	226

∗ At 1.013 x 10^5Pa (760mmHg) pressure (atmospheric). A higher boiling point is obtained by using a radiator pressure cap which permits the development of pressure within the cooling system.

5. Adding the LLC
   (1) Add only water if the mixture reduces in amount by evaporation.
   (2) If there is a mixture leak, add the LLC of the same manufacturer and type in the same mixture percentage.
   ∗ Never add any long-life coolant of different manufacturer. (Different brands may have different additive components, and the engine may fail to perform as specified.)
6. When the LLC is mixed, do not employ any radiator cleaning agent. The LLC contains anticorrosive agent. If mixed with the cleaning agent, sludge may build up, adversely affecting the engine parts.
7. Kubota's genuine long-life coolant has a service life of 2 years. Be sure to change the coolant every 2000 hours or every 2 years whichever comes faster.

NOTE :
- The above data represent industry standards that necessitate a minimum glycol content in the concentrated antifreeze.

https://truckmanualshub.com/

EVERY 3000 HOURS

■Checking Turbocharger
Consult your local KUBOTA Dealer for this service.

■Checking Supply Pump
Consult your local KUBOTA Dealer for this service.

■Checking Intake Air Heater
[M6-101, M6-111]
Consult your local KUBOTA Dealer for this service.

■Checking and Cleaning EGR System
Consult your local KUBOTA Dealer for this service.

■Cleaning DPF Muffler
[M6-101, M6-111]

◆ **Removal of ash**

The longer the DPF operates, the more ash (burnt residue) is collected in the filter. Too much ash build-up adversely affects the DPF performance. Consult your local KUBOTA Dealer to clean the filter.

IMPORTANT :
- The DPF needs cleaning with a specific cleaning device. Do not clean the DPF by disassembling, and attempt by yourself, consult your local KUBOTA Dealer.

■Checking DEF/AdBlue® injector
Consult your local KUBOTA Dealer for this service.

■Replacing DEF/AdBlue® Pump Filter
1. Loosen 4 bolts and remove pump cover.
2. Clean up around the plug and remove the plug.
3. Loosen the top of filter assembly and remove it from pump.
4. Replace the filter assembly with new one.

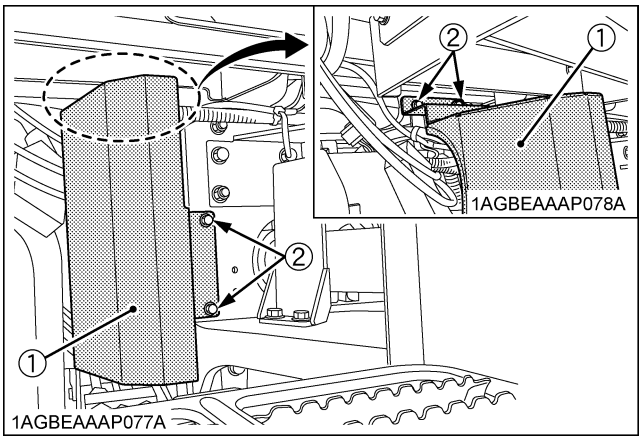

(1) Pump cover
(2) Bolt

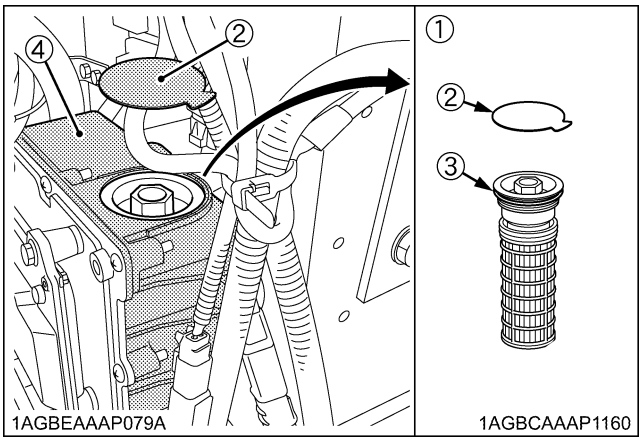

(1) Filter assembly
(2) Plug
(3) O-ring
(4) DEF/AdBlue® pump

NOTE :
- Even after stopping the engine, the injector cooling DEF/AdBlue® fluid continues to circulate through the circuit for a couple of minutes.
  When this circulation has ended, do the replacement job. (During cooling, the fluid's circulating noise is heard.)
- Do not apply oil to the O-ring of the filter.

https://truckmanualshub.com/

EVERY 8000 HOURS

■Cleaning DPF Muffler

[M6-131, M6-141]

◆ **Removal of ash**

The longer the DPF operates, the more ash (burnt residue) is collected in the filter. Too much ash build-up adversely affects the DPF performance. Consult your local KUBOTA Dealer to clean the filter.

IMPORTANT :

- The DPF needs cleaning with a specific cleaning device. Do not clean the DPF by disassembling, and attempt by yourself, consult your local KUBOTA Dealer.

EVERY 9000 HOURS

■Replacing DEF/AdBlue® Tank Filter

Consult your local KUBOTA Dealer for this service.

EVERY 1 YEAR

■Checking Antifrost Heater for Oil Separator

(if equipped)

Consult your local KUBOTA Dealer for this service.

■Checking CAB Isolation Cushion

Check the cushion for any breakage or fatigue. Replace them if they are deteriorated.

■Checking DPF Differential Pressure Sensor Pipe

Consult your local KUBOTA Dealer for this service.

■Checking EGR Pipe

Consult your local KUBOTA Dealer for this service.

EVERY 2 YEARS

■Replacing PCV (Positive Crankcase Ventilation) Valve Hose

Consult your local KUBOTA Dealer for this service.

■Replacing DPF Differential Pressure Sensor Hose

Consult your local KUBOTA Dealer for this service.

■Replacing Boost Sensor Hose

Consult your local KUBOTA Dealer for this service.

■Replacing Brake Hose

Consult your local KUBOTA Dealer for this service.

■Replacing Clutch Hose

Consult your local KUBOTA Dealer for this service.

■Replacing Differential Lock Hose

Consult your local KUBOTA Dealer for this service.

EVERY 3 YEARS

■Replacing Parking Brake Cable

Consult your local KUBOTA Dealer for this service.

https://truckmanualshub.com/

EVERY 4 YEARS

■Replacing Radiator Hose (Water pipes)

Replace the hoses and clamps.
(See "Checking Radiator Hose and Clamp" in "EVERY 500 HOURS" in "PERIODIC SERVICE" section.)

■Replacing Fuel Hose

Consult your local KUBOTA Dealer for this service.

■Replacing Intake Air Line

Consult your local KUBOTA Dealer for this service.

■Replacing Oil Cooler Line

Consult your local KUBOTA Dealer for this service.

■Replacing Power Steering Hose

Consult your local KUBOTA Dealer for this service.

■Replacing Lift Cylinder Hose

Consult your local KUBOTA Dealer for this service.

■Replacing Suspension Hose

[Front suspension type]
Consult your local KUBOTA Dealer for this service.

■Replacing Master Cylinder Kit

Consult your local KUBOTA Dealer for this service.

■Replacing Equalizer Kit

Consult your local KUBOTA Dealer for this service.

■Replacing Brake Seal 1 and 2

Consult your local KUBOTA Dealer for this service.

■Replacing Air Conditioner Hose

Consult your local KUBOTA Dealer for this service.

SERVICE AS REQUIRED

■Bleeding Fuel System

Air must be removed:
1. When the fuel filter or lines are removed.
2. When water is drained from water separator.
3. When tank is completely empty.
4. After the tractor has not been used for a long period of time.

◆ **Bleeding procedure is as follows:**
1. Fill the fuel tank with fuel, and open the fuel shutoff-valve.

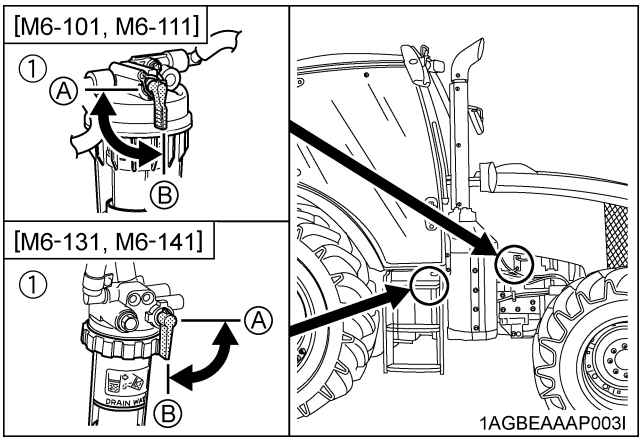

(1) Fuel shutoff-valve
(A) "CLOSE"
(B) "OPEN"

https://truckmanualshub.com/

2. Disconnect the heater connector.

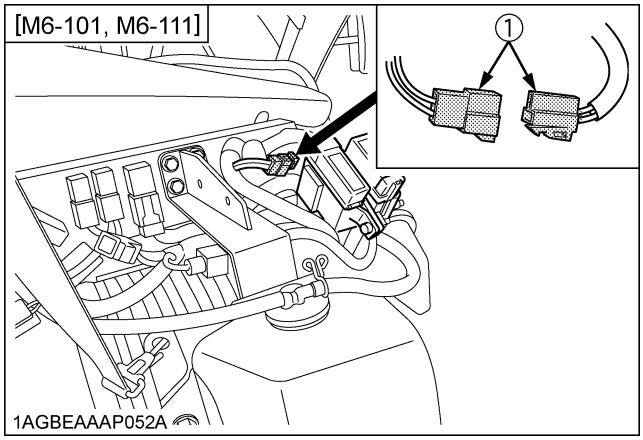

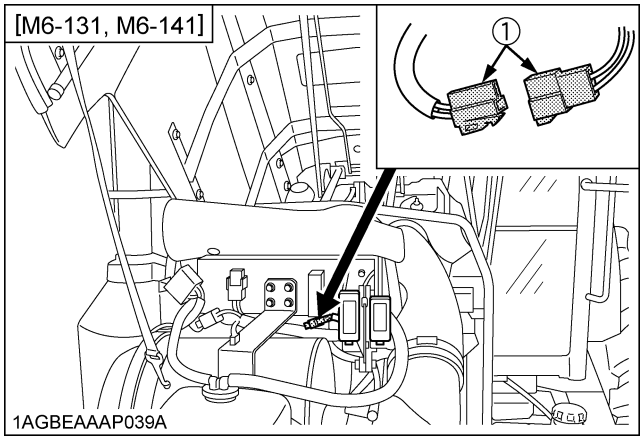

(1) Connector

IMPORTANT :
- Do not try air-bleeding with the heater in operation. Otherwise the battery may get damaged.

3. Turn ON and OFF the key switch repeatedly 10 times or so at the following intervals. This lets the air out of the fuel line.
   (1) Key switch ON time: 30 seconds
   (2) Key switch OFF time: 15 seconds

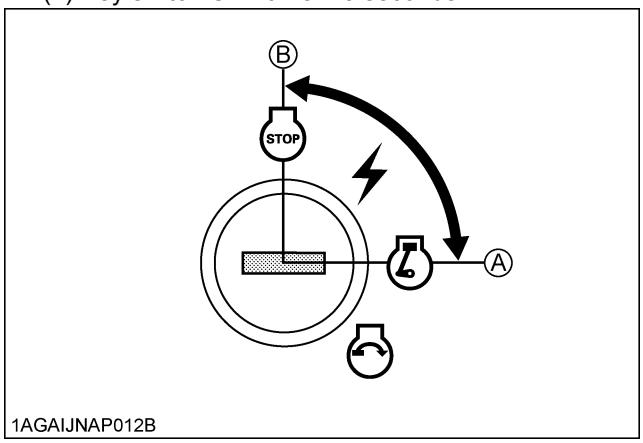

(1) Key switch *(A) "ON"* *(B) "OFF"*

4. Connect the heater connector.
5. Set both the hand and the foot throttles to the minimum speed position, turn the key switch to start the engine and then reset the throttle at the mid speed (around 1500 rpm) position.
   If engine doesn't start, try it several times at 30 second intervals.

IMPORTANT :
- Do not hold key switch at engine start position for more than 10 seconds continuously. If more engine cranking is needed, try again after 30 seconds.

6. Accelerate the engine to remove the small portion of air left in the fuel system.
7. If air still remains and the engine stops, repeat the above steps.

■Bleeding Brake System

Consult your local KUBOTA Dealer for this service.

■Draining Clutch Housing Water

The tractor is equipped with a drain plug under the clutch housing.
After operating in rain, snow or if the tractor has been washed, water may get into the clutch housing.
Remove the drain plug and drain the water, then install the plug again.

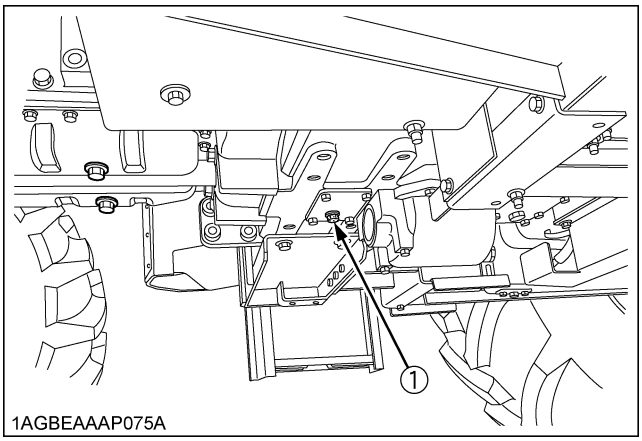

(1) Water drain plug

https://truckmanualshub.com/

■Replacing Fuse

The tractor electrical system is protected from potential damage by fuses.
A blown fuse indicates that there is an overload or short somewhere in the electrical system.
If any of the fuses should blow, replace with a new one of the same capacity.

IMPORTANT :

- Before replacing a blown fuse, determine why the fuse blew and make any necessary repairs. Failure to follow this procedure may result in serious damage to the tractor electrical system. Refer to the "TROUBLESHOOTING" section of this manual or your local KUBOTA Dealer for specific information dealing with electrical problems.

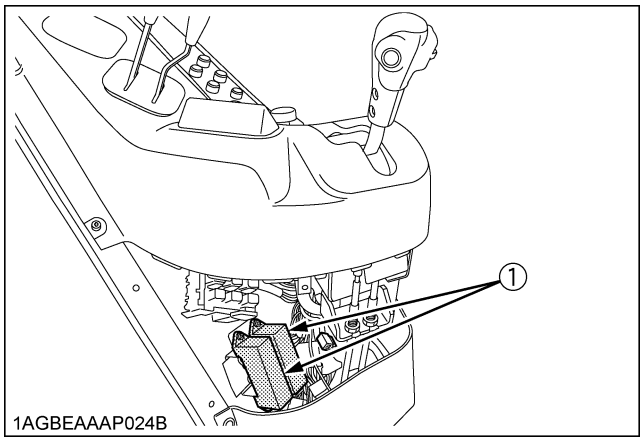

1AGBEAAAP024B

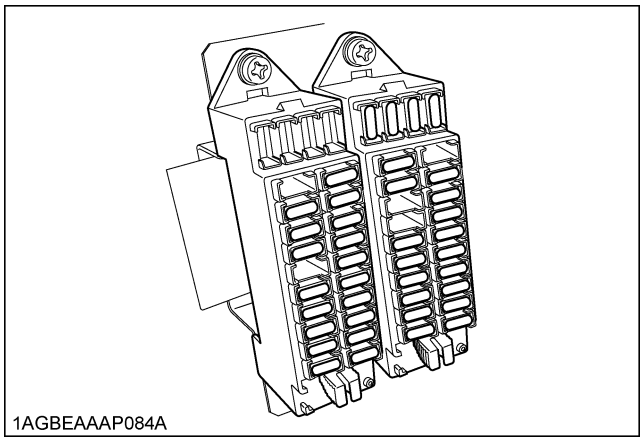
1AGBEAAAP084A

(1) Fuse box

◆ Protected circuit

[Fuse box 1]

				[5A] Spare	**[10A]** Spare	**[15A]** Spare	**[20A]** Spare
		[10A] Brake lamp		**[15A]** Work light (Cabin side)			
[10A] ECU (Suspension)*1		**[5A]** Switch (Transmission control)		**[15A]** Work light (Front upper)		**[15A]** Head lamp	
[5A] ECU (Switch)		**[5A]** Switch (Hitch control)				**[30A]** Air conditioner fan motor	
[30A] Defogger		**[10A]** ECU (Main)				**[10A]** Air conditioner compressor	
		[7.5A] Main meter		**[10A]** Option lamp		**[15A]** Tail lamp	
[10A] 4WD Brake		**[5A]** 4WD, Bi-speed, Differential lock		**[15A]** Work light (Rear)		**[15A]** Hazard	
[5A] Radio		**[5A]** Engine control, PTO valve		**[10A]** Work light (Bonnet)		**[10A]** Dome light, Radio	
[5A] Air conditioner (Fan control)		**[10A]** Turn signal		**[15A]** Seat compressor		**[10A]** Horn	
[15A] Wiper		**[15A]** Loader power aux socket		**[15A]** Cigarette socket		**[15A]** Loader plug	
[5A] Starter relay		**[5A]** Seat switch		**[15A]** Work light (Option)		**[5A]** Back up (ECU, Meter)	

NOTE :

*1 Depending on the specification, this fuse is not equipped.

https://truckmanualshub.com/

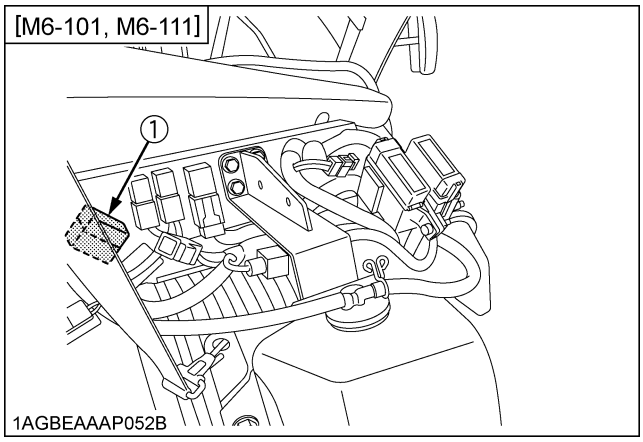

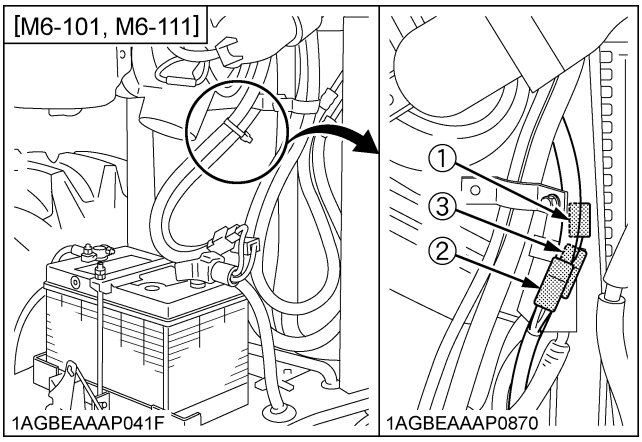

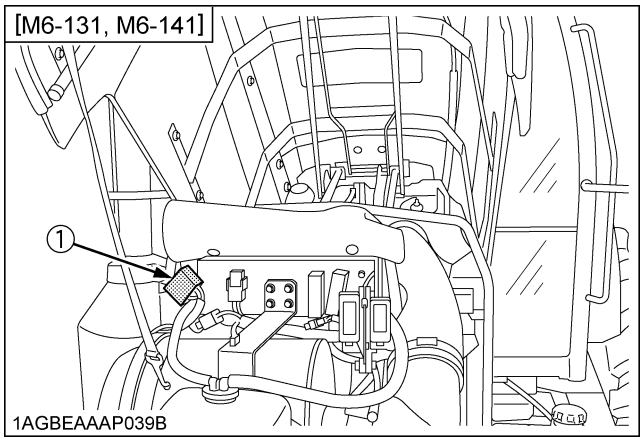

(1) Fuse box 2

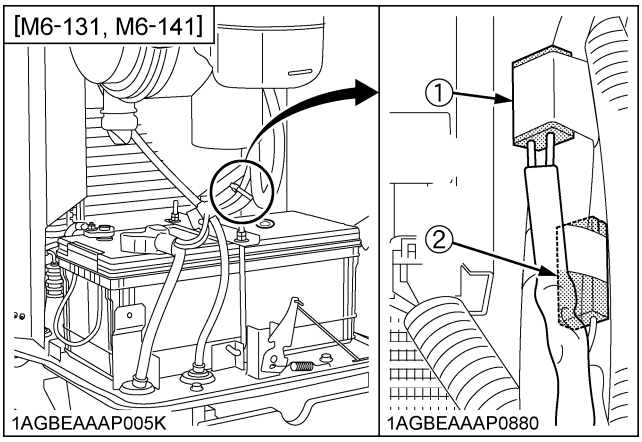

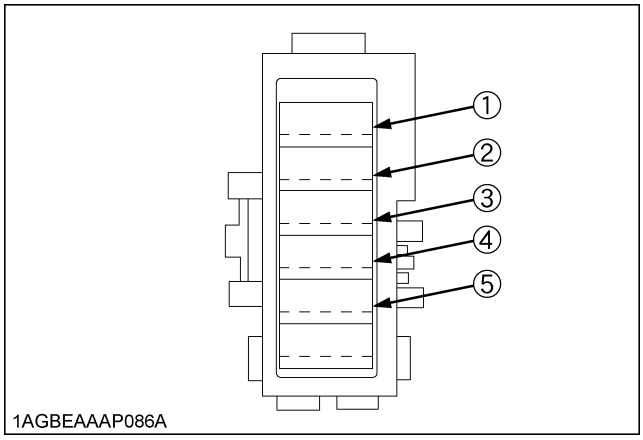

[Fuse box 2]

Fuse No.	Capacity (A)	Protected circuit
(1)	20	ECU (Comp)
(2)	30	ECU (Heater)
(3)	10	Sensor
(4)	10	EGR valve
(5)	20	Pump

[Oil separator Fuse]

Fuse No.	Capacity (A)	Protected circuit
(1)	15	Heater (Oil separator, IN)
(2)	15	Heater (Oil separator, OUT 1)
(3)	15	Heater (Oil separator, OUT 2)

https://truckmanualshub.com/

◆ **How to attach and detach the push-rivet assy.**

- Detaching procedure

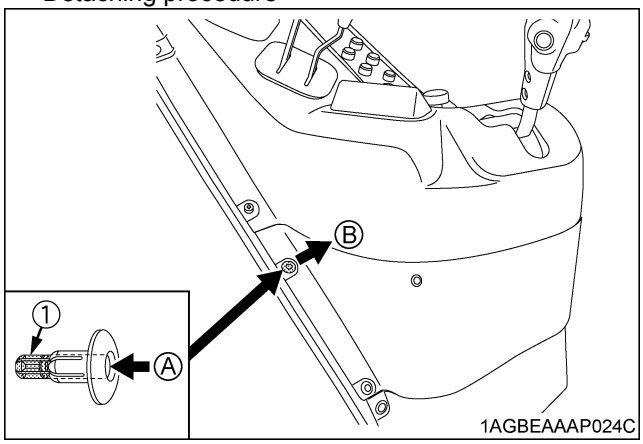

(1) Center-rivet
(A) Push in the center-rivet.
(B) Pull out the push-rivet assy.

- Attaching procedure

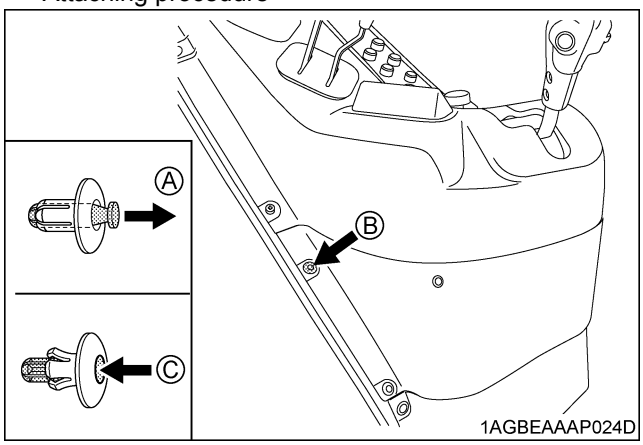

(A) Pull out the center-rivet.
(B) Attach the push-rivet assy.
(C) Push the center-rivet.

■Replacing Slow-Blow Fuses

The slow-blow fuses are intended to protect the electrical cabling. If any of them has blown out, be sure to pinpoint the cause. Never use any substitute, use only a KUBOTA genuine part.

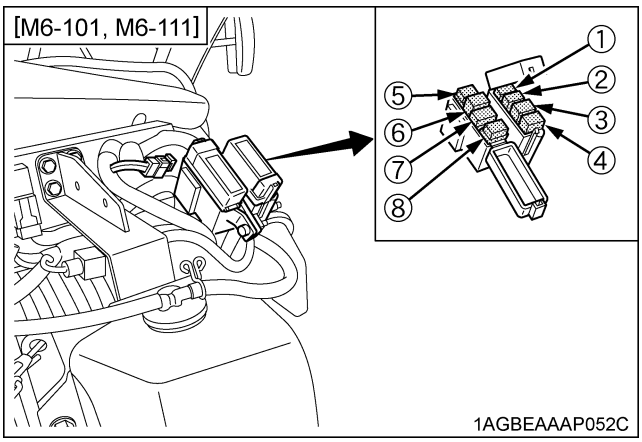

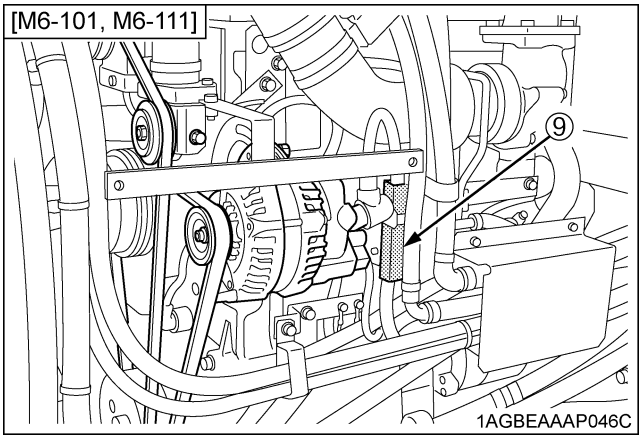

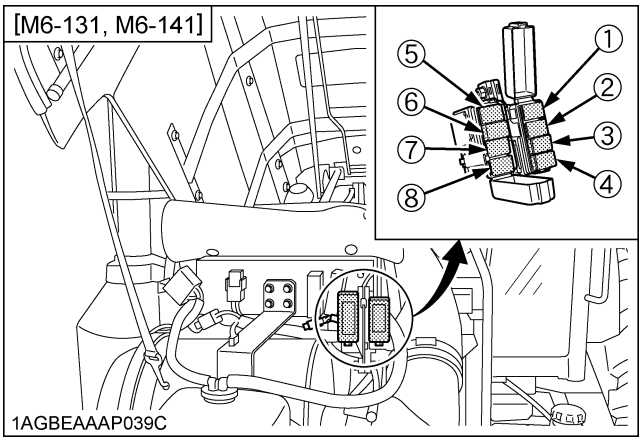

https://truckmanualshub.com/

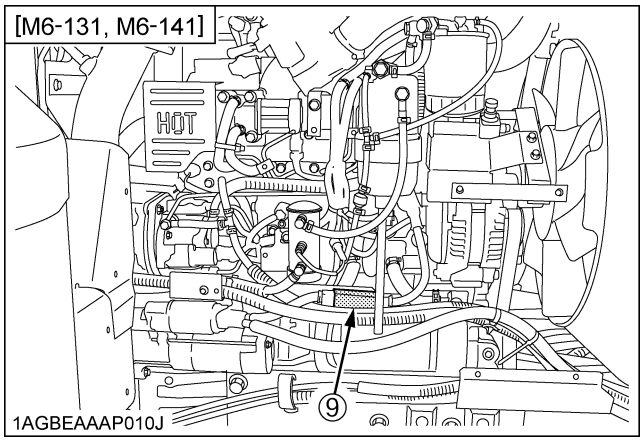

No.	Capacity	Protected circuit	Type
1	40A	Defogger	Non bolt fixed
2	30A	Electrical outlet	
3	40A	Work light (Rear)	Bolt fixed
4	120A [M6-101, M6-111]	Engine preheat	
	40A [M6-131, M6-141]	Work light (Hood) Head lamp	
5	40A [M6-101, M6-111]	Work light (Hood) Head lamp	
	60A [M6-131, M6-141]	Engine preheat	
6	40A	Compressor	
7	30A	Hazard	Non bolt fixed
8	30A	Main key switch	
9	150A	Alternator	Non bolt fixed

◆ **Replacement procedure**

[Non bolt fixed slow-blow fuse:]

1. Disconnect the negative cord of the battery.
2. Pull out the fuse from the fuse box.
3. Replace with a new one of the same capacity.

[Bolt fixed slow-blow fuse:]

Consult your local KUBOTA Dealer for this service.

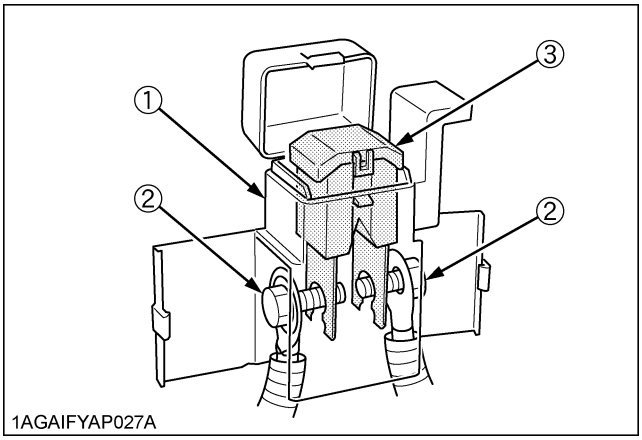

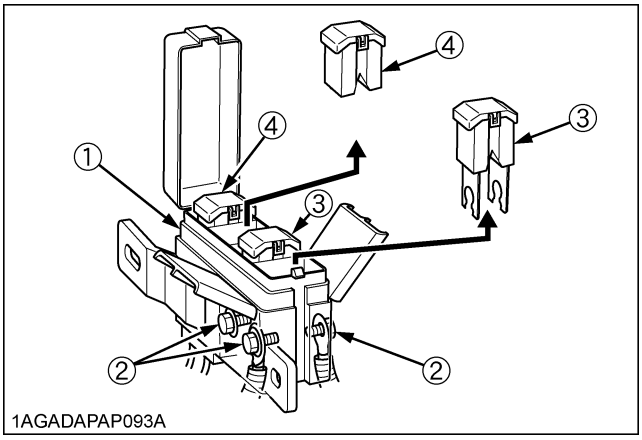

(1) Fuse box
(2) Bolt
(3) Bolt fixed slow-blow fuse
(4) Non bolt fixed slow-blow fuse

https://truckmanualshub.com/

■Replacing Light Bulb

1. Head light
   Take the bulb out of the light body and replace with a new one.
2. Other lights
   Detach the lens and replace the bulb.

Light	Capacity
Head light	60 / 55 W
Turn signal light (Front & Rear)	21 W
Stop light / Tail light	21 / 5 W
Work light (CAB)	35 W
Work light (Hood)	35 W
Dome light (Room lamp)	5 W

■Replacing Head Lamp

CAUTION

To avoid personal injury:

- **Be careful not to drop the bulb, hit anything against the lamp, apply excess force, and get the lamp scratched. If broken, glass may cause injury. Pay more attention to halogen lamps in particular, which have high pressure inside.**
- **Before replacing the lamp, be sure to turn off the light and wait until the bulb cools down, otherwise, you may get burned.**

1. While pushing the right and left lock buttons, pull and remove the electrical connector.
2. Remove the rubber boot.
3. Remove the clamping fixture and take out the bulb.
4. Replace with a new bulb and reinstall the head lamp assembly in the reverse order.

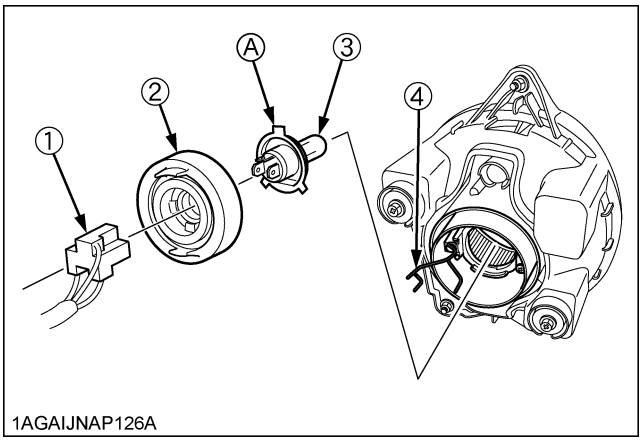

(1) Electrical connector
(2) Rubber boot
(3) Bulb
(4) Clamping fixture
(A)"Base's wider projection to face upward"

IMPORTANT :

- Be sure to use a new bulb of the specified wattage.
- Never touch the bulb surface (glass) with bare hands. Fingerprints, for example, may break the bulb.

■Lubricating Points

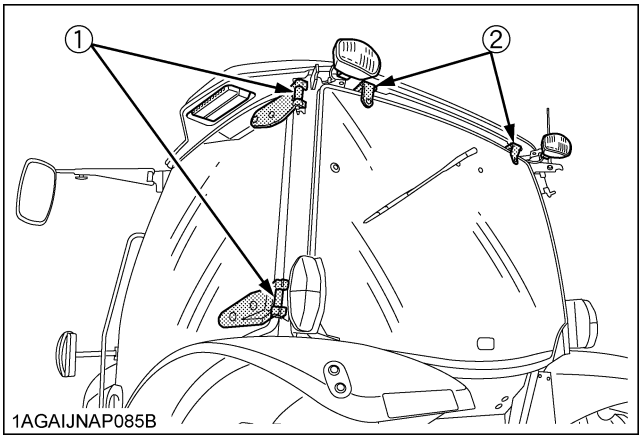

(1) Door hinge
(2) Rear window hinge

https://truckmanualshub.com/

■Adding Washer Liquid

Add a proper amount of automobile washer liquid.

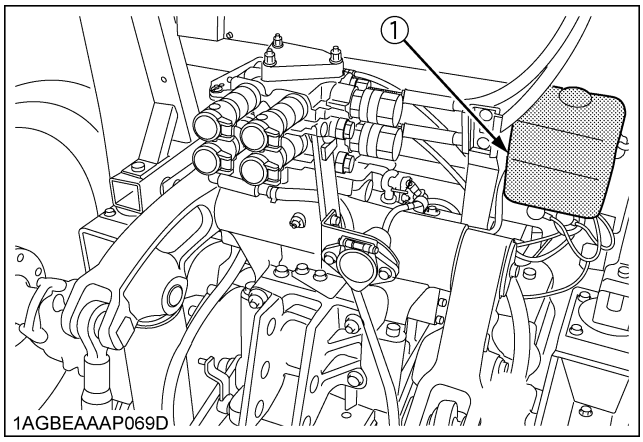

(1) Washer liquid tank

Washer tank capacity	2.0 L (2.1 U.S.qts.)

■Checking the Amount of Refrigerant (gas)

WARNING

To avoid personal injury or death:

- **Liquid contact with eyes or skin may cause frostbite.**
- **In the event of a leakage, wear safety goggles. Escaping refrigerant can cause severe injuries to eyes.**
- **In contact with a flame, R134a refrigerant gives a toxic gas.**
- **Do not disconnect any part of the refrigeration circuit of the air conditioning system. Consult your local KUBOTA Dealer for assistance and service.**

A shortage of refrigerant impairs the air-conditioner performance. Check the following points. If it is indicated that the amount of refrigerant is extremely low, ask your dealer to inspect and charge.

◆ Checking procedure

1. Run the air-conditioner in the following conditions.

- Engine speed: About 1500 rpm
- Temperature control lever: Maximum cooling position (leftmost)
- Fan switch: Highest blow (HI)
- Air-conditioner switch: ON

2. Look into the sight glass to see if the refrigerant is flowing through its circuit.

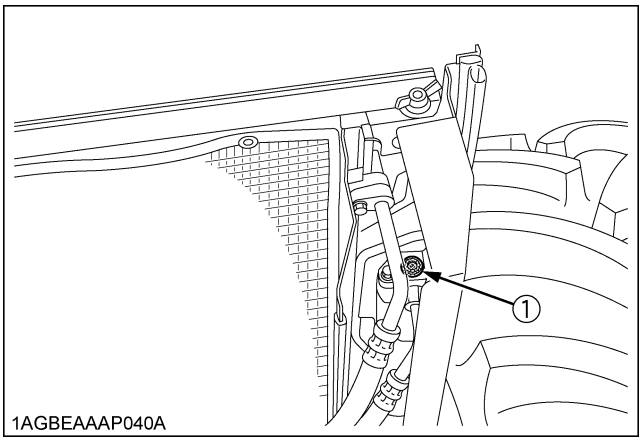

(1) Sight glass

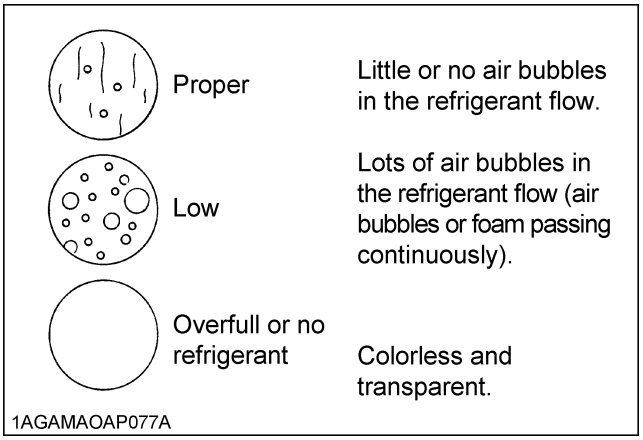

IMPORTANT :

- Charge only with R134a not R12 refrigerant (gas).

https://truckmanualshub.com/

STORAGE

WARNING

To avoid personal injury or death:

- **Do not clean the machine while the engine is running.**
- **To avoid the danger of exhaust fume poisoning, do not operate the engine in a closed building without proper ventilation.**
- **When storing, remove the key from the key switch to avoid unauthorized persons from operating the tractor and getting injured.**

TRACTOR STORAGE

If you intend to store your tractor for an extended period of time, follow the procedures outlined below.

These procedures will insure that the tractor is ready to operate with minimum preparation when it is removed from storage.

1. Check the bolts and nuts for looseness, and tighten if necessary.
2. Apply grease to tractor areas where bare metal will rust also to pivot areas.
3. Detach the weights from the tractor body.
4. Inflate the tires to a pressure a little higher than usual.
5. Change the engine oil and run the engine to circulate oil throughout the engine block and internal moving parts for about 5 minutes.
6. Keep the PTO clutch control switch or lever at "DISENGAGE" position while tractor is stored for a long period of time.
7. With all implements lowered to the ground, coat any exposed hydraulic cylinder piston rods with grease.
8. Park tractors equipped with the front suspension system with the suspension cylinders in the lowest position using manual control mode.
9. Remove the battery from the tractor. Store the battery following the battery storage procedures.
   (See "Checking Battery Condition" in "EVERY 100 HOURS" in "PERIODIC SERVICE" section.)
10. Preferably let the DEF/AdBlue® out of its tank and store the fluid in another specific tank.
    For a long-term storage of DEF/AdBlue®, refer to "Storing and Handling the DEF/AdBlue®" in "Selective Catalytic Reduction (SCR) MUFFLER" in "OPERATING THE ENGINE" section.
11. Keep the tractor in a dry place where the tractor is sheltered from the elements. Cover the tractor.
12. Store the tractor indoors in a dry area that is protected from sunlight and excessive heat. If the tractor must be stored outdoors, cover it with a waterproof tarpaulin.
    Jack the tractor up and place blocks under the front and rear axles so that all 4 tires are off the ground. Keep the tires out of direct sunlight and extreme heat.

IMPORTANT :

- When washing the tractor, be sure to stop the engine. Allow sufficient time for the engine to cool before washing.
- Cover the tractor after the muffler and the engine have cooled down.

REMOVING THE TRACTOR FROM STORAGE

1. Check the tire air pressure and inflate the tires if they are low.
2. Jack the tractor up and remove the support blocks from under the front and rear axles.
3. Install the battery. Before installing the battery, be sure it is fully charged.
4. Check the fan belt tension.
5. Check all fluid levels (engine oil, transmission/ hydraulic oil, engine coolant, DEF/AdBlue® and any attached implements).
6. Start the engine. Observe all gauges. If all gauges are functioning properly and reading normal, move the tractor outside. Once outside, park the tractor and let the engine idle for at least 5 minutes. Shut the engine off and walk around tractor and make a visual inspection looking for evidence of oil or water leaks.
7. With the engine fully warmed up, release the parking brake and test the brakes for proper adjustment as you move forward. Adjust the brakes as necessary.

https://truckmanualshub.com/

TROUBLESHOOTING

ENGINE TROUBLESHOOTING

If something is wrong with the engine, refer to the table below for the cause and its corrective measure.

Trouble		Cause	Countermeasure
Engine is difficult to start or won't start.		● No fuel flow.	● Check the fuel tank and the fuel filter. Replace filter if necessary.
		● Air or water is in the fuel system.	● Check to see if the fuel line coupler bolt and nut are tight. ● Bleed the fuel system (See "Bleeding Fuel System" in "SERVICE AS REQUIRED" in "PERIODIC SERVICE" section.)
		● In winter, oil viscosity increases, and engine revolution is slow.	● Use oils of different viscosities, depending on ambient temperatures. ● Use engine block heater (Optional)
		● Battery becomes weak and the engine does not turn over quick enough.	● Clean battery cables & terminals. ● Charge the battery. ● In cold weather, always remove the battery from the engine, charge and store it indoors. Install it on the tractor only when the tractor is going to be used.
		[M6-101, M6-111] ● Intake air heater system trouble.	● Check to see if the slow blow fuse of the intake air heater blows. ● Check to see if the intake air heater functions in cold weather.
		[M6-131, M6-141] ● Preheat (glow plug) system trouble.	● Check to see if the slow blow fuse of the preheat (glow plug) blows. ● Check to see if the preheat (glow plug) functions in cold weather.
Insufficient engine power.		● Insufficient or dirty fuel. ● The air cleaner is clogged.	● Check the fuel system. ● Clean or replace the element.
		● DEF/AdBlue® runs short	● Add DEF/AdBlue®.
Engine stops suddenly.		● Insufficient fuel.	● Refuel. ● Bleed the fuel system if necessary.
		● DEF/AdBlue® runs short	● Add DEF/AdBlue®.
Exhaust fumes are colored.	Black	● Fuel quality is poor. ● Too much oil. ● The air cleaner is clogged.	● Change the fuel and fuel filter. ● Check the proper amount of oil. ● Clean or replace the element.
	Blue white	● The inside of exhaust muffler is damp with fuel. ● Injection nozzle trouble. ● Fuel quality is poor.	● Check to see if the intake air heater functions in cold weather. ● Heat the muffler by applying load to the engine. ● Check the injection nozzle. ● Change the fuel and fuel filter.

https://truckmanualshub.com/

Trouble	Cause	Countermeasure
Engine overheats	● Engine overloaded	● Shift to lower gear or reduce load.
	● Low coolant level	● Fill cooling system to the correct level; check radiator and hoses for loose connections or leaks.
	● Loose or defective fan belt	● Adjust or replace fan belt.
	● Dirty radiator core or grille screens	● Remove all trash.
	● Coolant flow route corroded	● Flush cooling system. ● Check to see if the fan drive is on. (if equipped)

If you have any questions, contact your local KUBOTA Dealer.

Trouble	Operator's action
Engine not overheated, but engine warning indicator on.	Stop the engine and get it restarted. If the engine fails to restart or the indicator stays on, immediately contact your local KUBOTA dealer.If the warning indicator lights up, the following phenomena may appear depending on the engine's trouble spot. ● The engine stops unexpected. ● The engine fails to start or gets interrupted just after start. ● The engine output is not enough. ● The engine output is enough, but the warning indicator stays on.

If you have any questions, contact your local KUBOTA Dealer.

https://truckmanualshub.com/

POWER SHIFT/RANGE SHIFT TROUBLE SHOOTING

If something is wrong with the power shift / range shift, an alarm sounds or the error code shown below is displayed on the liquid crystal display, indicating the location of the trouble. If an error code appears, immediately contact your local KUBOTA Dealer for repairs. Depending on the parts of the trouble, tractor can be used with some restriction as emergency measure. For details, check the error code and operator's action columns.

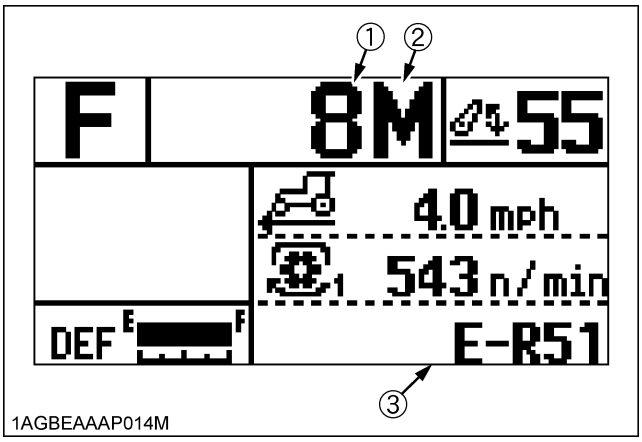

(1) Power shift number display area
(2) Range shift position display area
(3) Performance monitor area

Displayed error code		Alarm buzzer	Condition	Operator's action
Power shift number display area	Performance monitor area			
L and 1 to 8 flashing alternately	E-R51	3 consecutive tones	● Clutch is operated. ● Hydraulic switch (master) trouble. ● Proportional solenoid valve (master) trouble.	Contact your local KUBOTA Dealer. (If necessary, move the range shift lever to L. The machine can travel at any of 1st to 8th gears.)
C and 1 to 8 flashing alternately	E-R20	3 consecutive tones	● Trouble with the output voltage of the clutch pedal sensor. ● Clutch pedal sensor trouble.	Contact your local KUBOTA Dealer. (If necessary, move the range shift lever to N (in the L side) first and then to L. The machine can travel at any of 1st to 8th gears.)
C flashing	E-R37	3 consecutive tones	● Proportional solenoid valve (master) trouble.	Contact your local KUBOTA Dealer. (The machine cannot travel.)
---	---	---	● Shuttle switch (F/R) trouble. ● Shuttle F/R is not displayed.	Contact your local KUBOTA Dealer. (The machine cannot travel.)

https://truckmanualshub.com/

Displayed error code		Alarm buzzer	Condition	Operator's action
Power shift number display area	Performance monitor area			
1 to 8 flashing	E-R31 to 36	3 consecutive tones	● Trouble with the relevant solenoid valve. ● Proportional solenoid valve (range shift L/H) trouble.	Contact your local KUBOTA Dealer. (If necessary, move the range shift lever to N. The machine can travel at any of gears which is not flashing.)
	E-R45 to 50 E-R52 to 55	---	● Trouble with a hydraulic switch that is not related to the flashing gear speed. ● Hydraulic switch trouble. ● Main spool trouble	Contact your local KUBOTA Dealer. (If necessary, move the range shift lever to N first and then to L, H or M again. The machine can travel.)
P flashing	E-R38 to 44	3 consecutive tones	● Shifting is performed using the shift buttons. ● Hydraulic switch trouble. ● Main spool trouble.	Contact your local KUBOTA Dealer. (If necessary, move the range shift lever to N first and then to L, H or M again. The machine can travel.) (Machine gear position return to the position before shifting.)
n flashing	E-R44	3 consecutive tones	● Started by operation of the shift buttons, shuttle lever, and clutch pedal. ● Trouble with master clutch hydraulic switch trouble. ● Low system hydraulic pressure.	Contact your local KUBOTA Dealer. (The machine cannot travel.)
E lighting	---	Consecutive tones	● Power shift lever is operated with the shuttle lever is in the F or R position, the clutch pedal is released and the shift lock is not turning on.	Move the range shift lever to N.
L and E flashing alternately	E-R51	3 consecutive tones	● [L and 1 to 8] and shift lock switch trouble occur at the same time.	Contact your local KUBOTA Dealer. (If necessary, move the range shift lever to L. The machine can travel at any of 1st to 8th gears.)
C and E flashing alternately	E-R20	3 consecutive tones	● [C and 1 to 8] and shift lock switch trouble occur at the same time.	Contact your local KUBOTA Dealer. (If necessary, move the range shift lever to L. The machine can travel at any of 1st to 8th gears.)

Displayed error code		Alarm buzzer	Condition	Operator's action
Range shift position display area	Performance monitor area			
N flashing	---	---	● Trouble with the output voltage of the power shift lever sensor.	Contact your local KUBOTA Dealer. Flashes while driving. (The machine can travel.)

Note: If the hydraulic clutch gets in trouble, the gears may get shifted from the 1st to 2nd or slower speed automatically. This is to prevent the tractor from free-wheel. In such case, carefully move the tractor to a safe place, contact your local KUBOTA Dealer for repairs.

https://truckmanualshub.com/

OPTIONS

Consult your local KUBOTA Dealer for further details.

- Heavy Duty Fuel Tank Guard
- Front end weights
  For front ballast
- Front Weight Bumper
- Rear Wheel Weights
  For rear ballast
- Creep Speed Kit
- 80" Wide Axle
- Instructional Seat
- Front Fender
- Double Acting Remote Hydraulic Control Valve with Flow Position and Flow Control Functions
- Double Acting Remote Hydraulic Control Valve with Detente, Self-Cancelling and Flow Control Functions
- Hydraulic High Capacity Lift Cylinder
- Remote Hitch Up / Down Switch (RH)
- Clevis Type Swinging Drawbar
- Front Work Light
  High visibility for night work
- Rear Defogger
- Radio Cassette Player with Weatherband
- Radio CD Player with Weatherband

https://truckmanualshub.com/

APPENDICES

SIDE DIGITAL DISPLAY

■Changing the Information Displayed

1. Just touch the mode selector switch on the usual screen, and the symbols are highlighted and the 4 indicators start flashing.
   Press the switch (1 – 4) of a setting to change, and the relevant select screen shows up.

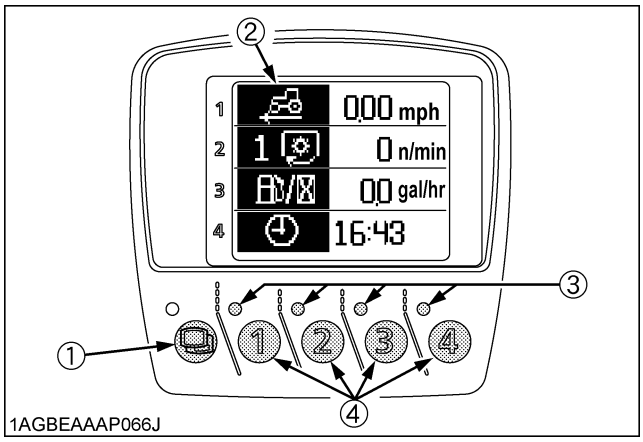

(1) Mode selector switch
(2) Symbol
(3) Indicator
(4) Switch

2. Each time Switch 1 is pressed, the select screens A, B and C change alternately in this order.
   Press Switch 3 to select the symbol of a setting to display.
   Press Switch 4 to enter this mode and the other symbols appear.

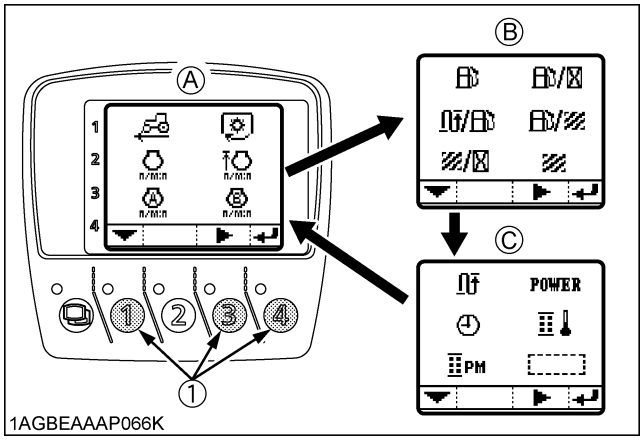

(1) Switch

(A) "Select screen A"
(B) "Select screen B"
(C) "Select screen C"

https://truckmanualshub.com/

■Information Displayed and its Handling

Selected screen	Info	Display	Remarks	Ref. page
A	Travel speed	Travel speed 0.00 mph	● Shows the standard factory settings. Refer to the "Handling the side digital display" section.	42
		Average travel speed Av. 0.00 mph		42
	PTO	PTO rpm (Shift 1) 1 540 r/min	● Shows the standard factory settings. Refer to the "Handling the side digital display" section.	78
		PTO rpm (Shift 2) 2 1000 r/min		78
	Engine rpm	n/min 2200 r/min		-
	Upper-limit rpm setting	n/min 1230 r/min		59
	Memory A rpm	n/min 2000 r/min		59
	Memory B rpm	n/min 1000 r/min		59

https://truckmanualshub.com/

Selected screen	Info	Display	Remarks	Ref. page
B	Total fuel consumption	Total fuel consumption 80.0 gal	● Displays the total fuel consumption measured from the previous resetting. ● The maximum value which can be displayed is 999.9 gallons or 999.9 liters. ● Hold down the corresponding switch, and the setting goes back to “0.0”.	-
	Mileage	Mileage 3.9 gal/hr	● Shows the standard factory settings. Refer to the "Handling the side digital display" section.	-
		Average fuel consumption Av. 2.6 gal/hr		-
		Mileage graph		-
	Work distance mileage (based on fuel consumption)	Instantaneous work distance fuel consumption 2.35 mpg	● Each time the corresponding switch is pressed, the "instantaneous" and "average" are displayed alternately. ● The "average" is measured based on the fuel consumption from the previous resetting. ● With the "average" displayed, hold down the corresponding switch. The setting goes back to "0.0".	-
		Average work distance fuel consumption Av. 2.89 mpg		-
	Work area mileage (based on fuel consumption)	Instantaneous work area fuel consumption 0.5 gal/ac	● Each time the corresponding switch is pressed, the "instantaneous" and "average" are displayed alternately. ● The "average" is measured based on the fuel consumption from the previous resetting. ● With the "average" displayed, hold down the corresponding switch. The setting goes back to "0.0". ● (See *1.)	-
		Average work area fuel consumption Av. 0.5 gal/ac		-
	Work area operating efficiency (based on hourly coverage)	Instantaneous work area operating efficiency 7.41 ac/hr	● Each time the corresponding switch is pressed, the "instantaneous" and "average" are displayed alternately. ● The "average" is measured based on the hourly coverage from the previous resetting. ● With the "average" displayed, hold down the corresponding switch. The setting goes back to "0.0". ● (See *1.)	-
		Average work area operating efficiency Av. 8.52 ac/hr		-

https://truckmanualshub.com/

Selected screen	Info	Display	Remarks	Ref. page
B	Work area	5000 acres	● Displays the work area measured from the previous resetting. ● Hold down the corresponding switch. The setting goes back to "0.0". ● (See *1.)	-

Selected screen	Info	Display	Remarks	Ref. page
C	Travel distance	3000 mi	● Displays the travel distance measured from the previous resetting. ● Hold down the corresponding switch, and the setting goes back to “0”.	-
	Loading factor	Instantaneous loading factor POWER 70 %	● Each time the corresponding switch is pressed, the “instantaneous”, “average” and “graph” are displayed alternately in this order. ● The “average” is measured based on the loading factor from the previous resetting. ● With the “average” displayed, hold down the corresponding switch. The setting goes back to “0”. ● The “instantaneous loading factor graph” graphically displays the instantaneous loading factor in real time. (The more the bar is extended to the right, the higher the load becomes.)	-
		Average loading factor Av POWER 60 %		-
		Instantaneous loading factor graph POWER		-
	Clock	Time 15:14	● Shows the standard factory settings. Refer to the “Handling the side digital display” section.	55
		Date 7/ 4/2012		173
	DPF tempera-ture	1000 °F	● Displays the DPF muffler temperature.	13
	PM buildup	PM buildup PM 70 %	● Displays the PM buildup inside the DPF muffler. ● Regeneration is needed when the 100% level has been reached. ● Each time the corresponding switch is pressed, the “numerical value” and “graph” are displayed alternately. ● The more the bar is extended to the right, the more PM builds up.	13
		PM buildup graph PM		13
	Blank		● Used to delete the information displayed.	-

*1: In the various setting mode, preset the "Working range of implement". (Refer to the "Initial Setting" in "SIDE DIGITAL DISPLAY" in "OPERATING THE TRACTOR" section.) If not preset, correctly, incorrect data will be displayed.

https://truckmanualshub.com/

■Displaying and Using the Work History

1. Turn on the key switch. Hold down the mode selector switch on the following screen, and various setting mode select screen appears.

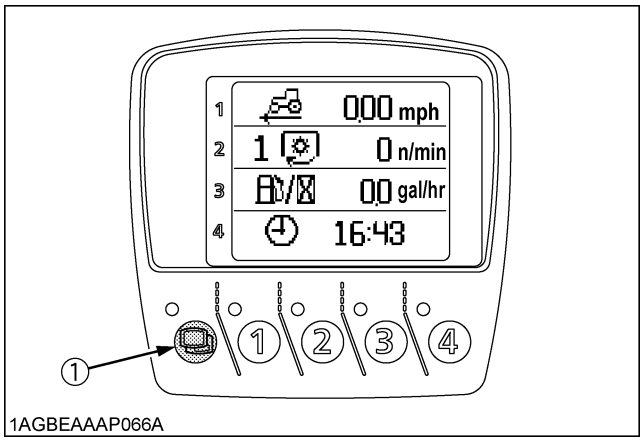

(1) Mode selector switch

2. Press Switch 3 to select the work history mode. Press Switch 4, and the work history mode screen shows up.

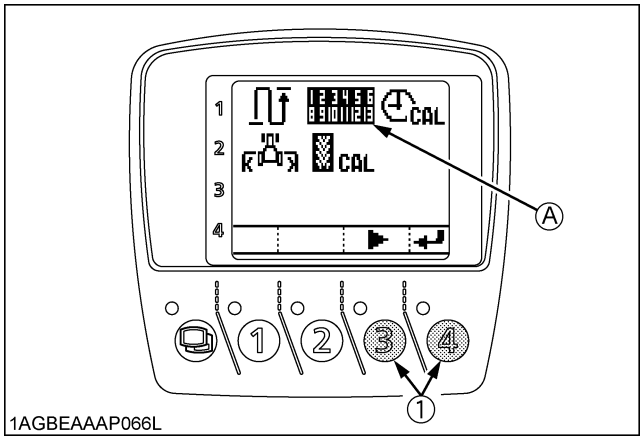

(1) Switch *(A) "Work history mode"*

3. Using Switch 3, select "YES". Press Switch 4, and the clock setting screen shows up. Set the clock, and the calendar screen appears instead.

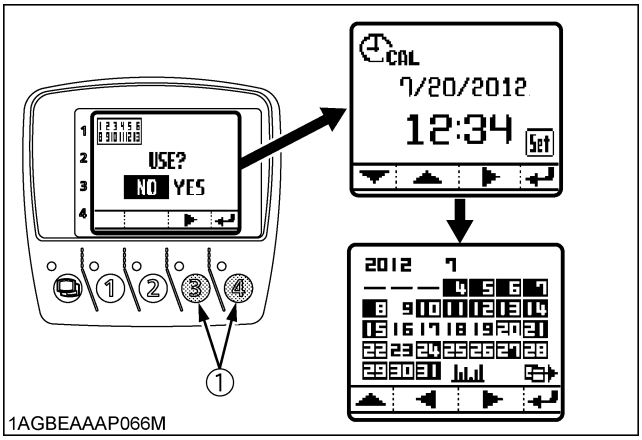

(1) Switch

◆ **Viewing the calendar**

White-numbered dates on black background	Operating days
Black-numbered dates on white background	Non-operating days
-	Non-recording days

4. Using Switches 2 and 3, select a date. Press Switch 4, and the day's operating hours and fuel consumption are displayed.
   (Press the mode selector switch to go back to the calendar screen. Press Switch 1 on the calendar screen, and the previous month shows up. The data are recorded for the past 4 months.)

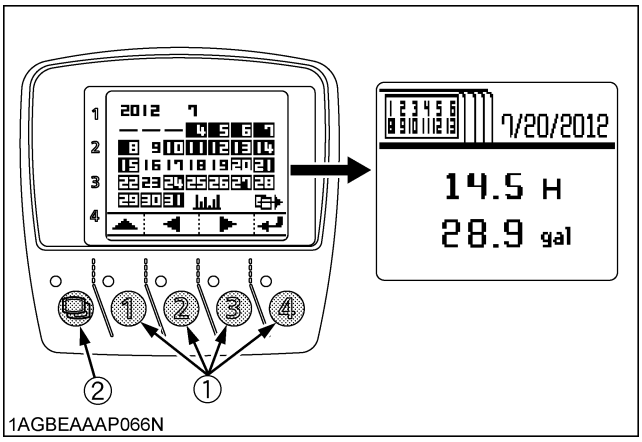

(1) Switch
(2) Mode selector switch

https://truckmanualshub.com/

5. Using Switches 2 and 3, select the "graph". Press Switch 4, and the graph is displayed.

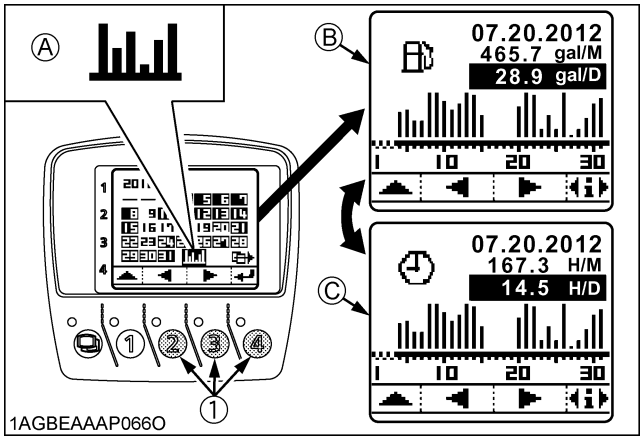

(1) Switch

(A) "Graph"
(B) "Fuel consumption"
(C) "Operating hours"

◆ **Viewing the graph**

(1) Press Switch 4, and the fuel consumption and the operating hours are alternately displayed.

(2) Fuel consumption:
The bar graph shows the day's fuel consumption. When a date is selected with Switch 2 or 3, the fuel consumption of the day and that of the month are digitally displayed.

(3) Operating hours:
The bar graph shows the day's operating hour. When a date is selected with Switch 2 or 3, the operating hours of the day and that of the month are digitally displayed.

6. Using Switches 2 and 3, select the "page feed". Press Switch 4, and the work history's "stop" or "restart" screens appear.

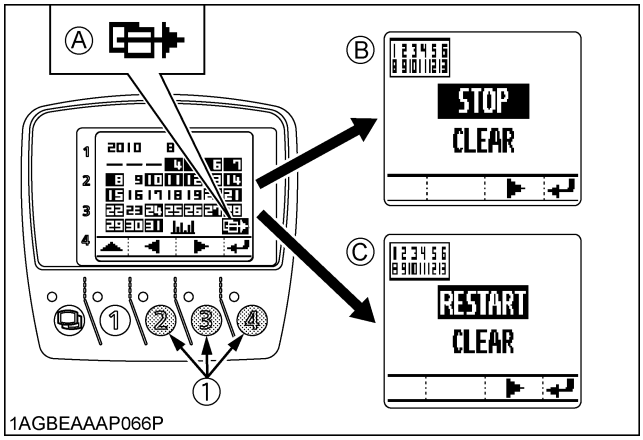

(1) Switch

(A) "Page feed"
(B) "Stop (with work history enabled)"
(C) "Restart (with work history disabled)"

STOP	Press Switch 3 to select "STOP". Press Switch 4, and the following confirmation screen appears. Select "YES" and press Switch 4, and the work history will stop and various setting mode screen shows up instead. 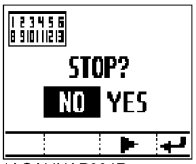 1AGAIJNAP004R
RESTART	Press Switch 3 to select "RESTART". Press Switch 4, and the clock setting screen shows up. Set the clock, and the work history will get restarted.
CLEAR	Press Switch 3 to select "CLEAR". Press Switch 4, and the following confirmation screen appears. Select "YES" and press Switch 4, and the work history will be cleared and get in initial state. Then various setting mode screen shows up instead. 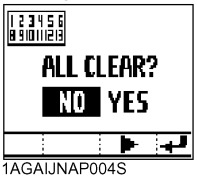 1AGAIJNAP004S

7. When the mode selector switch is pressed on the calendar screen, various setting mode screen shows up again. Press the same switch once more, and the usual mode screen is resumed.

https://truckmanualshub.com/

■Measuring the Distance

1. Hold down the mode selector switch on the usual screen, and various setting mode screen shows up. Press Switch 3 to select the distance measuring mode. Press Switch 4, and the distance measuring mode screen appears.

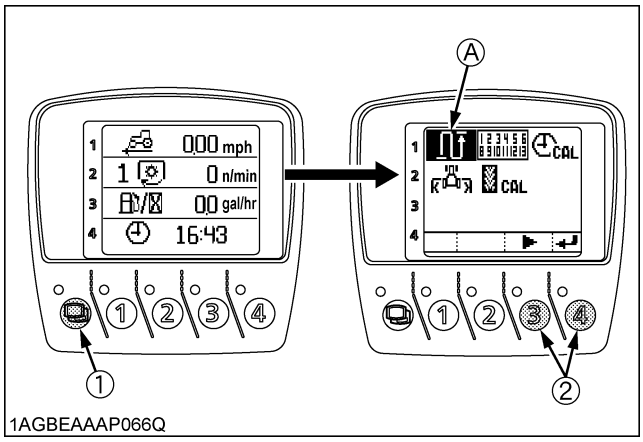

(1) Mode selector switch *(A) "Distance measuring mode"*
(2) Switch

2. Press Switch 1, and the distance data goes back to "0". Press Switch 4, and measuring the distance starts. Press this switch again to stop the measurement.

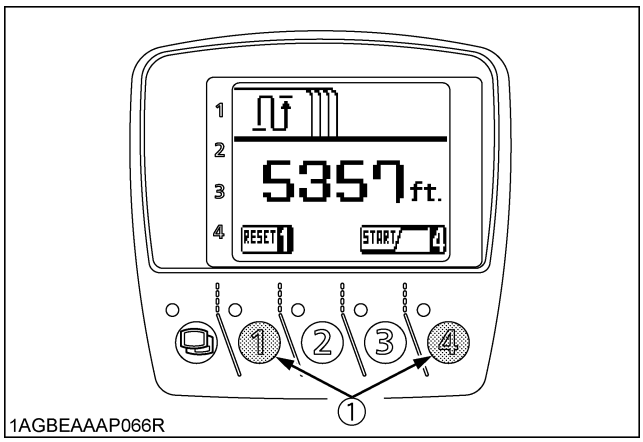

(1) Switch

■Changing the Units and Dates

1. While holding down the mode selector switch, turn on the key switch. The following screen appears.
2. Using Switch 3, select "UNIT" or "YEAR". Press Switch 4, and the setting screen shows up.

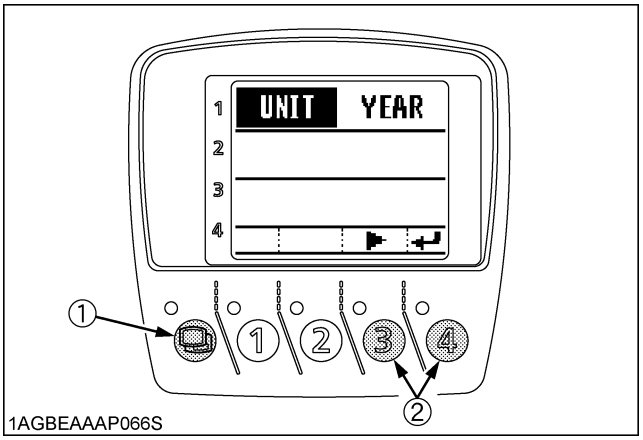

(1) Mode selector switch
(2) Switch

◆ Setting the units

Using Switch 3, select the units of "JAPAN/EU" or "USA". Press Switch 4 to save this setting.

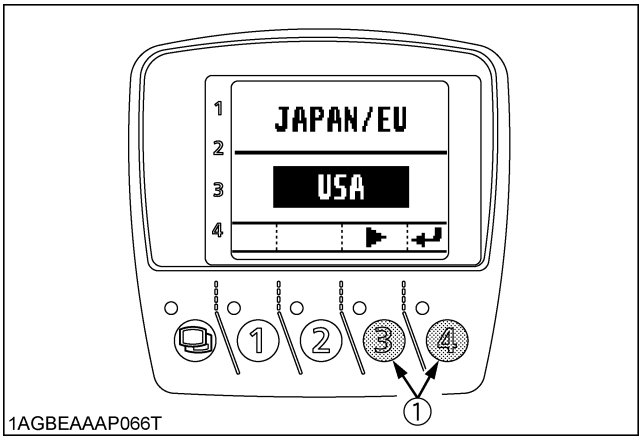

(1) Switch

	Unit
JAPAN/EU	km, L, ℃
USA	ft, gal, ℉

https://truckmanualshub.com/

◆ **Setting the year**

Using Switch 3, select the date to display. Press Switch 4 to enter this year.

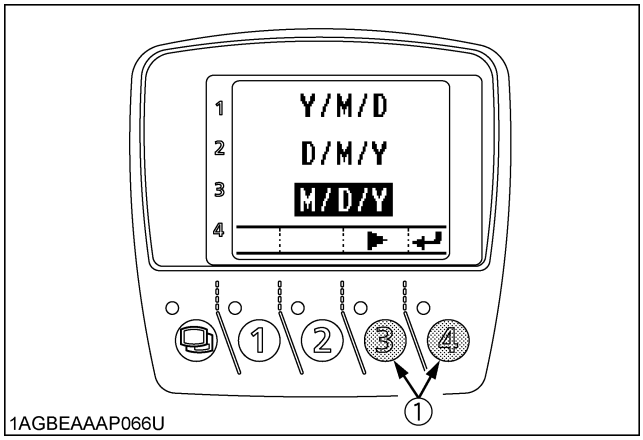

(1) Switch

Y / M /D	Year / Month / Day
D / M /Y	Day / Month / Year
M / D / Y	Month / Day / Year

3. Press the mode selector switch, and the item select screen reappears.
4. Finally, turn off the key switch.

https://truckmanualshub.com/

INDEX

1000 rpm PTO Shaft 79
3-P. Quick Raise / Lower Switch.....90
3-Point Hitch Lowering Lock Lever 90
3-Point Hitch Lowering Speed Adjustment Dial 89
3-Point Hitch's Position Lock.....91
4WD / Auto 4WD Switch 45
Accumulator 148
Air Cleaner Primary Element.....128
Air Cleaner Primary Element and Secondary Element.....148
Air Conditioner Hose 153
Air Conditioner Pipe and Hose.....145
Air Control Vent.....106
Air-Conditioner Belt Tension 133
Airflow 105
Amount of Refrigerant (gas).....160
Anti-Freeze 150
Antifrost Heater for Oil Separator.....152
Auto-Mode Setting 68
Battery Condition 131
Bi-speed Turn Switch.....46
Block Heater (if equipped) 32
Boost Sensor Hose 152
Bottom Limit Control Dial 89
Brake Hose 152
Brake Pedal 123
Brake Pedal 129
Brake Pedals (Right and Left).....40
Brake Seal 1 and 2 153
Brake System.....154
CAB Isolation Cushion 152
Checking and Refueling.....117
Clutch Hose 152
Clutch Housing Water 154
Clutch Pedal.....41
Constant RPM Management Control 62
Control Panel 106
Coolant Level 121
Coolant Temperature Gauge 52
Cooling System and Coolant 149
Creep Lever (if equipped) 45
DEF / AdBlue® Gauge.....51
DEF/AdBlue®.....22
DEF/AdBlue® injector 151
DEF/AdBlue® Injector Tip.....148
DEF/AdBlue® level and the fluid.....118
DEF/AdBlue® Line.....148
DEF/AdBlue® Pump Filter 151
DEF/AdBlue® Tank Filter.....152
DHC switch 44
Differential Lock 74
Differential Lock Hose 152
Do not Operate the Tractor at Full Speed for the First 50 Hours. 34
Dome Light.....104
Door 103
DPF Differential Pressure Sensor Hose....152
DPF Differential Pressure Sensor Pipe.....152
DPF Muffler 151
DPF Muffler 152
DPF Regeneration Process 14
DPF/SCR Muffler 123
Drawbar.....82
Drawbar Length.....85
Dual Exhaust Aftertreatment Devices 13
Dual Tires.....96
Easy Checker(TM) 50
EGR Cooler.....148
EGR Pipe 152
EGR System 151
Electrical Outlet 110
Emergency Exit 104
Engine Filter 124
Engine Oil.....124
Engine Oil.....138
Engine Oil Filter.....139
Engine Oil Level 120
Engine Start System 124
Engine Valve Clearance.....147
Equalizer Kit 153
Evacuator Valve 121
Exhaust Manifold.....148
Extendable Mirror 37
Factory-set Screen Display 57
Fan / Air-conditioner Belt Tension 124
Fan / Air-conditioner Belt Tension 136
Fan Belt Tension 129
Field Speed 67
Float Control.....88
Flow rate 93
Foot Throttle.....49
Fresh Air Filter.....135
Front Axle Gear Case Oil 147
Front Axle Pivot.....145
Front Ballast 101
Front Differential Case Oil.....147
Front Wheel Differential Lock Switch 75
Front Wheel Turning Stopper Bolt.....98

https://truckmanualshub.com/

Front Wheels (with 4-wheel drive).....97
Front Wiper / Washer Switch 104
Fuel Filter 140
Fuel Gauge 51
Fuel Hose.....153
Fuel Injector Nozzle Tip 148
Fuel Line 144
Fuel Solenoid Pump Element 138
Fuel System 153
Fuel Tank Water 134
Fuse 155
Gauges, Meter and Easy Checker(TM) 124
Grill, Radiator and Screen.....122
Hand Throttle Lever 49
Handling Points 14
Head Lamp 159
Head Light, Turn Signal /
Hazard Light etc. 124
Holes of Lower Links.....82
Hood 116
Horn Button 39
Hydraulic Control Unit
Use Reference Chart 95
Hydraulic Oil Filter.....141
Immediately Stop the Engine if: 50
Inflation Pressure 96
Information Displayed 167
Information Displayed and its Handling.....168
Initial Setting 55
Inner Air Filter 134
Instructional Seat 36
Intake Air Heater 151
Intake Air Line 144
Intake Air Line 153
King-pin Pivot 146
Lateral Float 82
Lift Arm Top Limit Adjustment Dial.....89
Lift Cylinder Hose.....153
Lifting Rod (Left) 83
Lifting Rod (Right) 84
Light Bulb 159
Light Switch.....38
Lubricating Grease Fittings 126
Lubricating Oil for New Tractors.....34
Lubricating Points 159
Maintenance Items Chart.....113
Manual Control Mode.....73
Master Cylinder Kit.....153
Measuring the Distance 173
Mixed Draft Control Mode 88
Mode Selector Switch 87
Movable Parts 124
Oil Cooler Line 145
Oil Cooler Line 153
Oil Separator Element.....148
Opening the Door.....103
Operating on Slopes and Rough Terrain 76
Operating Procedure
for Auto Regeneration Mode 15
Operating Procedure
for Parked Regeneration 19
Operating Procedure
for Regeneration Inhibit Mode.....17
Operating the Tractor on a Road 76
Operation 65
Operation 107
Operator's Seat 34
Outline 63
Outline 71
Outline of the SCR 21
Parking 74
Parking Brake Cable 152
Parking Brake Lever.....49
Parking Brake Lever.....130
PCV (Positive Crankcase Ventilation)
Valve 148
PCV (Positive Crankcase Ventilation)
Valve Hose.....152
Performance Monitor.....54
Position Control Mode.....87
Power Shift.....145
Power Shift / Range Shift Lever
(PS. Lever) 42
Power Steering.....76
Power Steering Hose 153
Power Steering Line.....142
Pre-Fuel Filter 140
PTO Clutch Control Switch 78
PTO Shaft Cover and Shaft Cap.....80
Radiator Hose (Water pipes).....153
Radiator Hose and Clamp.....142
Rear Ballast.....102
Rear Wheel Differential Lock Pedal 75
Rear Wheels 99
Rear Window.....103
Rear Wiper / Washer Switch 105
Remote Control Valve 91
Remote Control Valve Coupler
Connecting and Disconnecting 92
Remote Control Valve Lever 91

https://truckmanualshub.com/

Remote Couplers Spillage Collector 94
Remote Hitch UP / DOWN Switch 83
Rev-limiter Control Dial 49
Rev-limiter Control Setting 59
Ride Condition Damper Switch 73
RPM Dual Memory Setting.....59
Seat Belt 36
Seat Belt 124
Sensitivity Adjustment.....68
Shuttle Lever.....44
Side Cover 116
Slow-Blow Fuses 157
Steering Adjustment.....37
Stopping.....49
Storing and Handling DEF/AdBlue®.....27
Sun Roof.....104
Supply Pump.....151
Suspension Hose.....153
Suspension Switch.....71
Swing Drawbar.....85
Tachometer.....52
Telescopic Lower Links.....85
Telescopic Stabilizers 84
Terminology 86
Tie-rod Dust Cover.....126
Tips on Diesel Particulate Filter (DPF)
Regeneration 21
Toe-in.....133
Top Link 84
Top Link Mounting Holes 82
Trailer Electrical Outlet.....77
Transmission Fluid.....146
Transmission Fluid Level 120
Transport the Tractor Safely 76
Turbocharger 151
Turn Signal / Hazard Light Switch.....38
Units and Dates 173
Walk Around Inspection 117
Warm-up and Transmission Oil
at Low Temperature Range 33
Warning Indication and
its Countermeasure.....22
Washer Liquid 160
Water Separator.....119
Water Separator.....137
Wheel Bolt Torque 125
Wipers in Cold Season 105
Work History 171
Work Light Switch (Front).....39
Work Light Switch (Rear) 39
Work Speed Display.....66