https://truckmanualshub.com/

U17-3

For Earth, For Life

Kubota

Kubota Mini Excavator

https://truckmanualshub.com/

World-Class Super Mini!

U-17

Kubota mini excavator pursues customer satisfaction, evolves and gives you the best performance. When you have to take on a tough job in a tight space, look no further than the versatile U17-3. This compact excavator delivers necessary power, required control and smooth performance.

Technology

Advanced functions accumulated the essence of Kubota technology.

◉Powerful engine

16HP engine provides sufficient power and reliability to your required job. In addition to its superior horsepower and performance, it also offers low noise, vibration level and exceptional fuel efficiency.

◉Digital panel

The user-friendly digital panel features one-touch button operation to view the time, working hour and engine rpm. Warning lamp with code number on the display alerts you in case of emergency such as overheating, hydraulic problem or low battery. With easier access, simpler setting, easy-to-read indicator and alert, you're always aware of the excavator's functioning status.

1. Fuel level gauge
2. Water temperature gauge
3. Warning lamps (overheating, hydraulic, battery)
4. LCD display (time, hour meter, tachometer)

Time

Hour meter

Tachometer

https://truckmanualshub.com/

Operational Performance

Relying on it's highly productive, ultra maneuverable, powerful operation and environment-friendliness, H·M·S Hydraulic System is ready to perform efficiently.

H·M·S Hydraulic System

Kubota adopts "3 pump system", using three independent pumps for boom, arm and swivel to make the co-operation of bucket, boom and swivel smoothly and efficiently. It equips high capacity control valve and hydraulic variable pumps to realize superb excavating and loading performance.

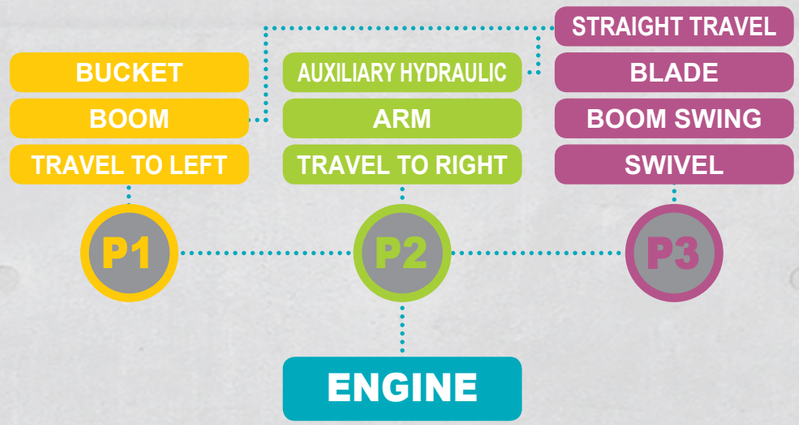

Strong bucket breakout force

The U17-3 has necessary power for heavy load and tough excavating operation.

Straight travel

Kubota hydraulic matching system keeps U17-3 traveling in a straight way while operating the boom, assisting in loading and off-loading.

Four simultaneous operation

Bucket, boom, arm and swing can be operated simultaneously and smoothly.

Auxiliary hydraulic system

Auxiliary hydraulic system accommodates to various of attachments, such as breaker and auger.

Pedal-operated boom swing

The pedal lets you operate boom swing easily.

Deluxe seat

The U17-3 deluxe seat increases productivity by providing optimum comfort for the operator.

Multi pattern lever

Four pattern operation let you make easy adjustment for different types of operating mode.

12V electric power socket

It can use for jack as same as automobile cigarette lighter.

Boom cylinder

By locating above the boom, the boom cylinder remains safe from damage during breaker or dumping operation.

Working performance

The excellent reach and digging depth of U17-3 ensure that each digging operation is performed with maximum efficiency and speed.

Max. bucket breakout force	: 15.2 kN (1545 kgf)
Max. digging depth	: 2310 mm
Max. digging radius	: 3900 mm
Max. vertical wall digging depth	: 1910 mm

Variable track width

The U17-3 features a hydraulic track gauge that can be adjusted from 990mm to 1240mm. With the touch of a single lever, you can reduce the track gauge to navigate narrow spaces or increase it to improve functionality.

Changing the blade width is as easy as removing one pin by hand.

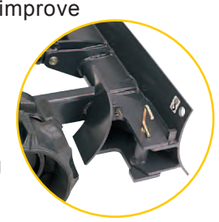

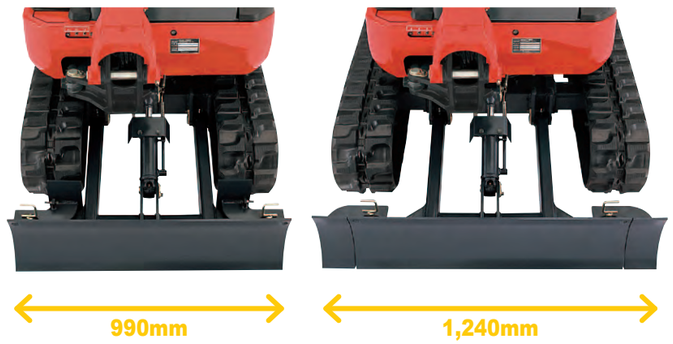

https://truckmanualshub.com/

Safety

The world class Rops / Fops canopy is used for enhancement of operator safety.

Rops / Fops canopy
The Rops and Fops canopy supplied with seat belt provides complete protection from accidental rollover, falling object, and ensures extra level of safety and security on the job.

Seat slide & retractable seat belt
The operator seat is slid back and forth.

Accumulator
The U17-3 equips accumulator.

Auto glow control
Engine start-up time is reduced thanks to engaged auto-glow control when the key is turned to the right.

Engine neutral start and Engine start safety system
Engine starts up only when the safety lever is set at locking position. And if safety lever is set at locking position, the machine doesn't move preventing accident caused by miss-operation.

Reflector
To enhance safety on the job at night.

Easy Maintenance

If you're looking for the easy maintenance, take a look at U17-3.

Wide-opening bonnets
Wide-opening bonnets enable easy access to the engine oil gauge, coolant reserve tank and dual element air cleaner. It's easy to access to fuel filter, water separator, battery, radiator and oil coolant.

Handy toolbox
The U17-3 equips a toolbox located behind the operator seat.

Two-piece dozer hose
Two-piece dozer hose connection simplify hose replacement and reduce downtime.

Track tension spring
Track tension spring supports durability of the crawler.

Protected motor hoses

Travel motor hoses are enclosed within the track frame for additional protection.
As a result, it reduces repair cost and increases durability.

Protected front hoses
The U17-3 front hoses are routed within the arm for greater protection. This design improves operator's visibility, increases hose service life and lowers repair cost.

Kubota Genuine Parts
for maximum performance, durability and safety

https://truckmanualshub.com/

Specifications

Model			U17-3
Bucket capacity		m^3	0.04
Std.bucket width: (with/without cutting blade)		mm	450 / 400
Machine weight		kg	1820
Operating weight (Including operator weight: 75kg)		kg	1895
Dimensions (in transport condition)	Overall length	mm	3545
	Overall height	mm	2340
	Overall width	mm	990 / 1240
	Min. ground clearance	mm	150
Engine	Model		Kubota D902-K3A
	Total displacement	cc	898
	Rated output (SAE J1995 gross)	kW (HP) / rpm	11.8 (16.0) / 2300
Working range	Max. digging height	mm	3540
	Max. dumping height	mm	2440
	Max. digging depth	mm	2310
	Max. vertical wall digging depth	mm	1910
	Max. digging radius	mm	3900
	Boom swing (left/right)	deg	65 / 58
	Min. turning radius (with swing)	mm	1440 (1210)
	Min. tail turning radius	mm	620
	Max. breakout force (bucket)	kN (kgf)	15.2 (1545)
Track type			Steel
Track width		mm	230
Travel section	Crawler length	mm	1585
	Tumbler distance	mm	1230
	Travel speed (1st/2nd gear)	km / h	2.1 / 4.1
	Max. climbing angle	deg	30
Swing speed		rpm	9.1
Blade	Width	mm	990 / 1240
	Height	mm	265
	Max. lift above ground/drop below ground	mm	280 / 190
Hydraulic pump type			Variable pump x 2 + gear pump x 1
Swivel motor type			Orbit motor
Travel motor type			Hydraulic piston motor: 2F
Fuel tank capacity		L	19

* Specifications in this catalog are subject to change without prior notice.
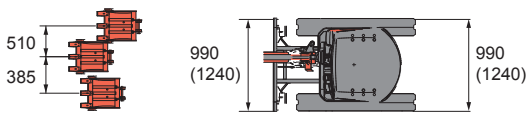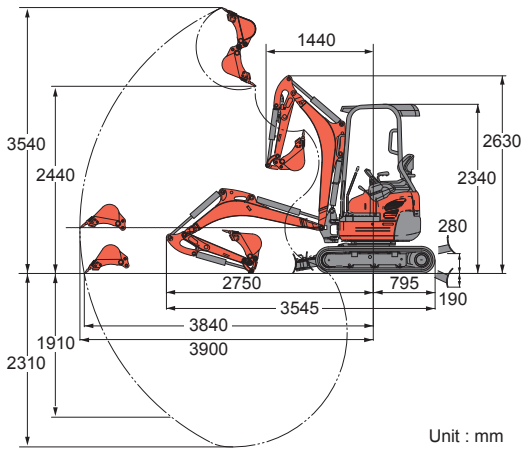
Working Range of U17-3