https://truckmanualshub.com/

PACCAR MX-11

Operator's Manual

2017 Emissions
2017-2018 Model Years
Warranty

https://truckmanualshub.com/

https://truckmanualshub.com/

Engine Operation 1

Engine Maintenance 2

Engine Warranty 3

https://truckmanualshub.com/

© 2017 PACCAR Inc. - All Rights Reserved

This manual illustrates and describes the operation of features or equipment which may be either standard or optional on this vehicle. This manual may also include a description of features and equipment which are no longer available or were not ordered on this vehicle. Please disregard any illustrations or descriptions relating to features or equipment which are not on this vehicle. PACCAR reserves the right to discontinue, change specifications, or change the design of its vehicles at any time without notice and without incurring any obligation. The information contained in this manual is proprietary to PACCAR. Reproduction, in whole or in part, by any means is strictly prohibited without prior written authorization from PACCAR Inc.

https://truckmanualshub.com/

Chapter 1 | ENGINE OPERATION

In this Chapter:

Safety - Introduction.....5
Emergency - What To Do If.....10
Operating Instructions.....14

Safety - Introduction

Using this Manual

Please take the time to get acquainted with your vehicle by reading this Operator's Manual. We recommend that you read and understand this manual from beginning to end before you operate this equipment.
This manual contains useful information for the safe and efficient operation of this equipment. It also provides service information, with an outline for performing safety checks and basic preventive maintenance inspections. We have tried to present the information you'll need to learn about functions, controls, and operation—and to present it as clearly as possible. We hope you'll find this manual easy to use.
There will be times when you need to take this manual out of the glovebox. When you do, please be sure to return it when you are finished using it. That way it will be there when you need it the next time or when you pass the vehicle on to the next user.

> **NOTE**
>
> After you've read this manual, it should be stored in the cab for convenient reference and remain with this truck when sold.

Your vehicle may not have all the features or options mentioned in this manual. Therefore, you should pay careful attention to the instructions that pertain to just your vehicle. In addition, if your vehicle is equipped with special equipment or options not discussed in this manual, consult your dealer or the manufacturer of the equipment.
There are several tools built into this manual to help you find what you need quickly and easily. First is the Quick Table of Contents. Located at the front of the manual, this lists the main subjects covered and gives section numbers where you can find these subjects. Use the Quick Table of Contents to find information on a large subject like "Maintenance." Cross-referenced citations also help you get the information you need. If some other part of the manual contains further information on the subject you are reading about, we'll indicate that in a cross-reference like this: (See *Safety Alerts* on page 5). You won't have to go searching for more information.
Finally you'll find a helpful Subject Index. It's in the back of the manual and alphabetically lists the subjects covered. So if you want information on brakes, for example, just look under Brake in the Subject Index. You'll find all the pages listed where brakes or braking are discussed.
All information contained in this manual is based on the latest production information available at the time of publication. Kenworth Truck Company Peterbilt Motors Company reserves the right to make changes at any time without notice.

Safety Alerts

Please read and follow all of the safety alerts contained in this manual. They are there for your protection and information. These alerts can help you avoid injury to yourself, your passengers and help prevent costly damage to the vehicle. Safety alerts are highlighted by safety alert symbols and signal words such as "WARNING", "CAUTION", or "NOTE". Please DO NOT ignore any of these alerts.

https://truckmanualshub.com/

Warnings

The safety message following this symbol and signal word provides a warning against operating procedures which could cause death or injury. They could also cause equipment or property damage. The alert will identify the hazard, how to avoid it and the probable consequence of not avoiding the hazard.

WARNING

Hot engine oil can be dangerous. You could be burned. Let the engine oil cool down before changing it. Failure to comply may result in death, personal injury, equipment or property damage.

Cautions

The safety message following this symbol and signal word provides a caution against operating procedures which could cause equipment or property damage. The alert will identify the hazard, how to avoid it, and the probable consequence of not avoiding the hazard.

CAUTION

Continuing to operate your vehicle with insufficient oil pressure will cause serious engine damage. Failure to comply may result in equipment or property damage.

Notes

The message following this symbol and signal word provides important information that is not safety related but should be followed. The alert will highlight things that may not be obvious and is useful to your efficient operation of the vehicle.

NOTE

Pumping the accelerator will not assist in starting the engine.

Forward

How to use this manual.

This manual contains information for the correct operation and maintenance of your PACCAR engine. Read and follow all safety instructions. Refer to the WARNING in the *General Safety Instructions* on page 7. Keep this manual with the equipment. If the equipment is traded or sold, give the manual to the new owner.
The information, specifications, and recommended maintenance guidelines in this manual are based on information in effect at the time of printing. PACCAR reserves the right to make changes at any time without obligation. If you find differences between your engine and the information in this manual, contact your local PACCAR Authorized Repair Location or write to:

PACCAR c/o PACCAR Engines

PO Box 1518 Bellevue, WA 98009

The latest technology and the highest quality components were used to produce this engine. When replacement parts are needed, we recommend using only genuine parts from PACCAR.

> **NOTE**
>
> Warranty information including the EPA and California Emission Warranty is located in the section entitled “Engine Warranty.” Make sure you are familiar with the warranty or warranties applicable to your engine.

Illustrations

Some of the illustrations throughout this manual are generic and will NOT look exactly like the engine or parts used in your application. The illustrations can contain symbols to indicate an action required and\or an acceptable or NOT acceptable condition.
The illustrations are intended to show repair or replacement procedures. The procedure will be the same for all applications, although the illustration may differ.

General Safety Instructions

Important safety notices about operating and servicing your engine.

> **WARNING**
>
> Improper practices, carelessness, or ignoring any warnings may cause death, personal injury, equipment or property damage.

Before performing any repair, read and understand all of the safety precautions and warnings. The following is a list of general safety precautions that must be followed to provide personal safety. Failure to follow these instructions may cause death or injury. Special safety precautions are included in the procedures when they apply.
Keep in mind that even a well maintained vehicle must be operated within the range of its mechanical capabilities and the limits of its load ratings. See the Weight Ratings label on the driver's door edge.
Every new vehicle is designed to conform to all Federal Motor Vehicle Safety Standards applicable at the time of manufacture. Even with these safety features, continued safe and reliable operation depends greatly upon regular vehicle maintenance. Follow the maintenance recommendations found in Preventive Maintenance section. This will help preserve your investment.
Make sure your vehicle is in top working condition before heading out on the road, it is the responsible driver's duty to do so. Inspect the vehicle according to the Driver's Check List.

- Use the proper tool for manually rotating the engine. DO NOT attempt to rotate the crankshaft by pulling or prying on the fan. This practice can cause death, personal injury, equipment damage, or damage to the fan blades, causing premature fan failure.
- Work areas should be dry, well lit, well ventilated, free from clutter, loose tools, parts, ignition sources and hazardous substances.
- Wear protective glasses and protective shoes when working.
- DO NOT wear loose-fitting or torn clothing. Tie back and/or tuck in long hair. Remove all jewelry when working.

https://truckmanualshub.com/

- Before beginning any repair, disconnect the battery (negative [-] cable) and discharge any capacitors.
- Put a “DO NOT OPERATE” tag in the operator's compartment or on the controls.
- Allow the engine to cool before slowly loosening the coolant filler cap to relieve the pressure from the cooling system.

WARNING

Removing the fill cap on a hot engine can cause scalding coolant to spray out and burn you badly. If the engine has been in operation within the previous 30 minutes, be very careful in removing the fill cap. Protect face, hands, and arms against escaping fluid and steam by covering the cap with a large, thick rag. DO NOT try to remove it until the surge tank cools down or if you see any steam or coolant escaping. In any situation, remove the cap very slowly and carefully. Be ready to back off if any steam or coolant begins to escape.

- Always use wheel chocks or proper jack stands to support the vehicle or vehicle components before performing any service work. DO NOT work on anything that is supported only by lifting jacks or a hoist. Before resting a vehicle on jack stands, be sure the stands are rated for the load you will be placing on them.
- Before removing or disconnecting any lines, fittings, or related items, relieve all pressure in the air, oil, fuel, and cooling systems. Remain alert for possible pressure when disconnecting any device from a system that contains pressure. High pressure oil or fuel can cause death or personal injury.
- Always wear protective clothing when working on any refrigerant lines and make sure that the workplace is well ventilated. Inhalation of fumes can cause death or personal injury. To protect the environment, liquid refrigerant systems must be properly emptied and filled using equipment that prevents the release of refrigerant gas. Federal law requires capturing and recycling refrigerant.
- When moving or lifting any heavy equipment or parts, make sure to use proper techniques and assistance. Ensure all lifting devices such as chains, hooks, or slings are in good condition and are of the correct load capacity. Make sure all lifting devices are positioned correctly.
- Corrosion inhibitors and lubricating oils may contain alkali. DO NOT get the substance in eyes and avoid prolonged or repeated contact with skin. DO NOT swallow. If ingested, seek immediate medical attention. DO NOT induce vomiting. In case of contact, immediately wash skin with soap and water. In case of harmful contact, immediately contact a physician. Always keep any chemicals OUT OF REACH OF CHILDREN.
- Naptha and Methyl Ethyl Ketone (MEK) are flammable materials and must be used with caution. Follow the manufacturer's instructions to ensure safety when using these materials. Always keep any chemicals OUT OF REACH OF CHILDREN.

- When working on the vehicle, be alert for hot parts on systems that have just been turned off, exhaust gas flow, and hot fluids in lines, tubes, and compartments. Contact with any hot surface may cause burns.
- Always use tools that are in good condition. Make sure you have the proper understanding of how to use the tools before performing any service work. Use only genuine replacement parts from PACCAR.
- Always use the same fastener part number (or equivalent) when replacing items. DO NOT use a fastener of lesser quality if replacements are necessary. (e.g., Do not replace a 10.9 grade with 8.8 grade fastener.)
- Always torque fasteners and fuel connections to the required specifications. Overtightening or under-tightening can allow leakage.
- Close the manual fuel valves prior to performing maintenance and repairs, and when storing the vehicle inside.
- DO NOT perform any repair when impaired, tired, fatigued or after consuming alcohol or drugs that can impair your functioning.
- Some state and federal agencies in the United States of America have determined that used engine oil can be carcinogenic and can cause reproductive toxicity. Avoid inhalation of vapors, ingestion, and prolonged contact with used engine oil.
- DO NOT connect the jump starting or battery charging cables to any ignition or governor control wiring. This can cause electrical damage to the ignition or governor.
- Coolant is toxic. If not reused, dispose of coolant in accordance with local environmental regulations.

CAUTION

Corrosive chemicals can damage the engine. DO NOT use corrosive chemicals on the engine. Failure to comply may result in equipment, or property damage.

California Proposition 65 Warning

- Diesel engine exhaust and some of its constituents are known to the State of California to cause cancer, birth defects, and other reproductive harm.
- The catalyst substrate located in the Diesel Particulate Filter (DPF) contains vanadium pentoxide, which has been determined by the State of California to cause cancer. Always wear protective clothing and eye protection when handling the catalyst assembly. Dispose of the catalyst in accordance with local regulations. If catalyst material gets into the eyes, immediately flood eyes with water for a minimum of 15 minutes. Avoid prolonged contact with skin. In case of contact, immediately wash skin with soap and water. In case of harmful contact, immediately contact a physician.
- Other chemicals in this vehicle are also known to the State of California to cause cancer, birth defects or other reproductive harm.
- Battery posts, terminals, and related accessories contain lead

https://truckmanualshub.com/

and lead compounds, chemicals known to the State of California to cause cancer and reproductive harm. Wash hands after handling.

Emergency - What To Do If

Roadside Assistance

What to do in an emergency and roadside assistance information.

Call toll-free to talk to someone at the PACCAR Customer Center:

- Kenworth customers call: **1-800-KW-Assist (1-800-592-7747)** | Peterbilt customers call: **1-800-4Peterbilt (800-473-8372)**
- Open 24-7-365 days a year.
- They can help you get roadside assistance.
- They have a custom mapping system which locates authorized PACCAR engine dealers and Independent Service Providers (ISPs) near you and lists types of services offered, hours of operation and contact information.
- They can assist with jump and pull starts, tires, trailers, fines and permits, chains, towing, hazardous clean-up, out of fuel (roadside), mechanical repairs and preventive maintenance services.
- They have multilingual agents and access to a translation service to ensure quality assistance for customers in any language.
- They can't answer your warranty questions, but can get you in contact with an authorized dealer who can.
- The PACCAR Customer Center service is FREE.

Stop Engine Lamp

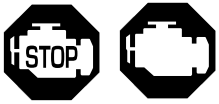

1 2

The stop engine warning lamp will illuminate, and an audible tone will sound, when a major engine problem exists. Your vehicle will be equipped with one of the indicators above, 1 or 2, depending on the engine model.

WARNING

If the Stop Engine warning lamp illuminates, it means you have a serious engine system problem. This should be considered an emergency. You should stop the vehicle as safely as possible and turn OFF the ignition. The vehicle must be serviced and the problem corrected before driving again. Failure to comply may result in death, personal injury, equipment or property damage.

For engines with the engine-protection shutdown feature enabled, the stop engine lamp will begin to flash 30 seconds before the engine automatically shuts down. The warning lamp alerts the operator to the impending shutdown.
The lamp will also illuminate when the DEF tank is almost empty or the soot level in the DPF is at full capacity. At this level warning, regeneration cannot be performed and engine power will be derated.
Engine may automatically shut down if the check engine lamp and stop engine lamp are illuminated and the operator does not correct the condition.

Engine Oil Pressure Lamp Turns On

What to do if the engine oil pressure lamp turns on.

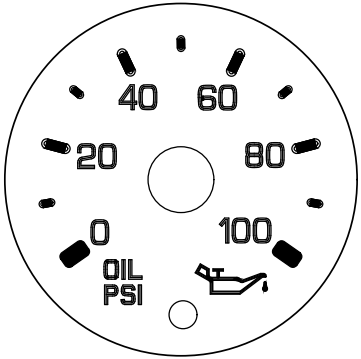

It is important to maintain oil pressure within acceptable limits. If oil pressure drops below the minimum psi a red warning lamp on the oil pressure gauge and the Stop Engine Lamp will come ON.

CAUTION

Continuing to operate your vehicle with insufficient oil pressure will cause serious engine damage. Failure to comply may result in equipment or property damage.

- If the oil pressure fails to rise within 10 seconds after the engine starts, stop the engine and determine the cause.
- See Engine Oil Specification for the correct oil pressure ranges for your vehicle's engine.
- If the oil pressure suddenly drops, or the audible alarm and engine oil pressure warning light come on while driving, do the following:

1. Slow down carefully.
2. Move a safe distance off the road and stop.
3. Place the transmission in neutral (N) and set the parking brake. (See Parking Brake Valve and Operating the Transmission in your vehicle Operator's Manual, for transmission shifting and parking brake information.)
4. Turn OFF the engine.
5. Turn ON the emergency flasher and use other warning devices to alert other motorists.
6. Wait a 15–20 minutes to allow oil to drain into the engine oil pan, and then check the oil level. See Engine Oil Level.
7. Add oil if necessary. If the problem persists, contact an authorized PACCAR engine dealer as soon as possible.

Check Engine Lamp Turns On

What to do if the check engine lamp turns on.

Or

Check Engine Lamp - Turns on when a problem exists, but the vehicle can still be safely driven. Vehicle should be serviced to correct the problem but the situation should not be considered an emergency.
The lamp will also illuminate when a DPF regeneration or addition of diesel exhaust fluid (DEF) is required. Another function of

https://truckmanualshub.com/

the check engine lamp is to warn the operator of an impending idle shutdown. When the idle shutdown timer is 30 seconds from expiring, the ECM begins flashing the check engine warning lamp once per second. When the timer expires, the ECM will turn off the warning lamp and shut down the engine.

Engine is Overheating

The cooling system may overheat if the coolant level is below normal or if there is sudden loss of coolant. Follow these steps if the engine is overheating.

CAUTION

The cooling system may overheat if the engine coolant is at the minimum level. A sudden loss of coolant, caused by a split hose or broken hose clamp could also lead to an overheat condition. Always inspect to ensure hoses and clamps are not cracked, worn, or loose. Failure to comply may result in equipment or property damage.

NOTE

The system may also temporarily overheat during severe operating conditions such as:

- Climbing a hill on a hot day.
- Stopping after high-speed/ high-load driving.
- Debris blocking air flow through the cooling module (radiator).

If the engine coolant temperature warning lamp comes on and the audible alarm sounds showing an overheat condition, or if you have any other reason to suspect the engine may be overheating, DO NOT TURN OFF THE ENGINE unless a low water warning device indicates a loss of coolant. Follow these steps:
Follow these steps if the engine coolant temperature is rising, or the temperature is already above normal, and there are no other warning alarms displayed in the instrument cluster.

1. Reduce engine speed, or stop. When stopped, place the transmission in neutral (N) and set the parking brake. Keep the engine running. See the vehicle operator's manual for instructions on transmission shifting and parking brake information.

WARNING

To reduce the chance of personal injury, vehicle damage and/or death from overheated engines, which can result in a fire, never leave the engine idling without an alert driver present. If the engine should overheat, as indicated by the engine coolant temperature light, immediate action is required to correct the condition. Continued unattended operation of the engine, even for a short time, may result in serious engine damage or a fire. Failure to comply may result in death, personal injury, equipment or property damage.

https://truckmanualshub.com/

WARNING

Removing the fill cap on a hot engine can cause scalding coolant to spray out and burn you badly. If the engine has been in operation within the previous 30 minutes, be very careful in removing the fill cap. Protect face, hands, and arms against escaping fluid and steam by covering the cap with a large, thick rag. DO NOT try to remove it until the surge tank cools down or if you see any steam or coolant escaping. In any situation, remove the cap very slowly and carefully. Be ready to back off if any steam or coolant begins to escape.

NOTE

Keep the engine running at idle speed unless a warning icon turns on and requires an engine to be shut off.

CAUTION

Prolonged periods of idling after the engine has reached operating temperatures can decrease engine temperature and could cause engine damage from inadequate lubrication. The normal torsional vibrations generated can also cause transmission wear. An idle shutdown feature, available on PACCAR engines, can be programmed to shut the engine down after a period of low idle operation with no driver activity. A flashing warning lamp will inform the driver of an impending shutdown. Failure to comply may result in equipment or property damage.

CAUTION

If the truck is equipped with power take off (PTO) equipment, the engine shutdown system can be deactivated when the PTO is operational; however, engine idle periods should not exceed five minutes whenever possible. Failure to comply may result in equipment or property damage.

2. Check to ensure the Oil Pressure Gauge reads normal.
3. Make sure the engine fan is turning by switching the Engine Fan Switch from AUTO to MAN (Manual).
4. Increase the engine speed to about one-half of full operating speed, or 1,100 to 1,200 rpm, maximum for 2 or 3 minutes.
5. Return the engine speed to normal idle. Monitor the engine temperature. After the temperature returns to normal, allow the engine to idle 3 to 5 minutes before shutting it off. This allows the engine to cool gradually and uniformly.
6. If overheating came from severe operating conditions, the temperature should have cooled by this time. If it has not, stop the engine and let it cool before checking to see if the coolant is low.
7. Be sure the vehicle is parked on level ground or the readings may be incorrect. Check the coolant level at the cooling module surge tank.

Check the coolant level after each trip when the engine has cooled. The coolant level should be visible within the surge tank —add coolant if necessary.

 https://truckmanualshub.com/

Operating Instructions

Engine Warning Lamps

Explanation of engine related warning lamps.

The following engine warning lamps section covers only the lamps controlled by the engine's Electronic Control Module (ECM). Please refer to the vehicle "Operator's Manual" and "Engine Aftertreatement Systems" manuals for additional warning lamp information.

CAUTION

The installation of electronic devices to the On Board Diagnostics (OBD) connector, the vehicle Controller Area Network (CAN), or their associated wiring is not permitted. Doing so can adversely affect vehicle performance and/or cause fault codes to be recorded. The OBD connector is provided for temporary connection of service tools and for diagnostic purposes only.

Stop Engine Lamp

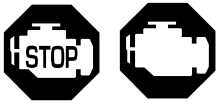

1 2

The stop engine warning lamp will illuminate, and an audible tone will sound, when a major engine problem exists. Your vehicle will be equipped with one of the indicators above, 1 or 2, depending on the engine model.

WARNING

If the Stop Engine warning lamp illuminates, it means you have a serious engine system problem. This should be considered an emergency. You should stop the vehicle as safely as possible and turn OFF the ignition. The vehicle must be serviced and the problem corrected before driving again. Failure to comply may result in death, personal injury, equipment or property damage.

For engines with the engine-protection shutdown feature enabled, the stop engine lamp will begin to flash 30 seconds before the engine automatically shuts down. The warning lamp alerts the operator to the impending shutdown.
The lamp will also illuminate when the DEF tank is almost empty or the soot level in the DPF is at full capacity. At this level warning, regeneration cannot be performed and engine power will be derated.
Engine may automatically shut down if the check engine lamp and stop engine lamp are illuminated and the operator does not correct the condition.

Engine, Check Engine

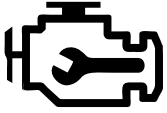

Or

Illuminates when a non emissions related problem exists, but the vehicle can still be safely driven. Vehicle should be serviced to correct the problem but the situation should not be considered an emergency.

Malfunction Indicator Lamp

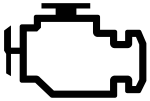

Illuminates when an engine emissions failure has occurred. The vehicle can be safely driven but should be serviced to correct the problem. The situation should not be considered an emergency. In some cases, the Malfunction Indicator Lamp (MIL) will activate in conjunction with the High Exhaust System Temperature (HEST), Diesel Particulate Filter (DPF) and Diesel Exhaust Fluid (DEF) warning lamps.

> **NOTE**
>
> The malfunction indicator lamp (MIL) will illuminate if the on-board diagnostics (OBD) system detects a possible emissions system failure. The vehicle should be brought in for service at the next opportunity to ensure the condition is corrected.

Diesel Particulate Filter (DPF) Warning Lamp

This warning symbol will appear when the DPF needs to be regenerated and then also during the regeneration cycle. This icon may also appear if the system is attempting to automatically regenerate while the vehicle is in Power Take Off operation mode.

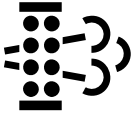

Engine aftertreatment system includes a diesel particulate filter and DPF warning lamp.

High Exhaust System Temperature (HEST) Warning Lamp

Engine aftertreatment system includes a high exhaust system temperature (HEST) warning lamp.

Keep vehicle a safe distance from combustible items.

> **WARNING**
>
> Temperature of the tail pipe, exhaust pipe, the diesel particular filter (DPF) / selective catalytic reduction (SCR) device and surrounding components including enclosures and steps, will be elevated during and shortly after a regeneration event or normal vehicle operation when engine is under high or heavy loading.

If the High Exhaust System Temperature (HEST) warning lamp is on:

- Do not park in an area of combustible vapors or materials. You must keep combustibles at least 1.5 m (5 ft) away from the exhaust (outlet) stream (as it exits the tail pipe) while the HEST lamp is illuminated. Always park your vehicle outside. Failure to do so could ignite an explosion or harm bystanders which could result in serious injury.
- Do not park in an area where people are close by. You must keep

 https://truckmanualshub.com/

combustibles at least 1.5 m (5 ft) away from the exhaust outlet while the HEST lamp is illuminated. Failure to do so could result in serious injury.

- Do not approach the exhaust system or surrounding areas without allowing adequate time for the system to cool down. Failure to do so could result in serious burns to the skin.

Diesel Exhaust Fluid (DEF) Lamp

Engine aftertreatment system includes a diesel exhaust fluid (DEF) warning lamp on the DEF gauge and additional warning lamps in the instrument cluster.

DEF Warning Lamp in Instrument Cluster

Diesel Exhaust Fluid (DEF) Gauge

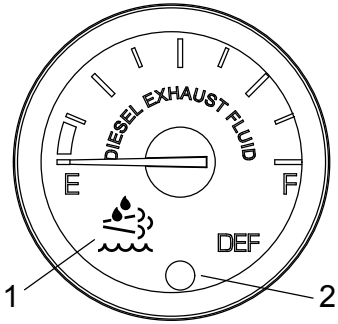

1. DEF Symbol
2. DEF Gauge Warning Lamp

The DEF lamp(s) will illuminate when the fluid in the DEF tank reaches a low level. If the lamp illuminates but the level is full, seek service immediately for DEF fluid quality or DEF equipment repair.

Engine Braking System

Information on using the engine braking system.

An engine compression brake is standard on the MX-11 engines. Optionally, this engine may be equipped with an exahust brake. When activated, these devices create a braking effect on the drive wheels. Because it can help keep your vehicle's brakes from overheating, it can save wear and tear on the service brakes. However, the engine compression or exhaust brake is not an emergency brake or the primary vehicle brake.

WARNING

Do not operate the engine compression brake when driving/operating your vehicle bobtail or with a loaded or unloaded trailer on road surfaces with poor traction (wet, icy, or snow covered roads) or in heavy traffic. There may not be enough weight on the rear axle to provide traction. Braking caused by the normal operation of the engine compression brake could cause you to lose control of the vehicle, resulting in an injury accident. Make sure the engine brake is switched "OFF" when bobtailing or with an unloaded trailer. Failure to comply may result in death, personal injury, equipment or property damage.

WARNING

The service brakes must be used in an emergency. The engine compression brake alone might not stop the vehicle fast enough to prevent an accident. The engine compression brake is NOT intended as the primary brake for the vehicle, nor is it an emergency brake. The engine compression brake only helps the service brakes by using engine back pressure to slow the drivetrain. Use the service brakes for quick stops. You could be seriously injured if you relied only on the engine compression brake to stop the vehicle in an emergency. Failure to comply may result in death, personal injury, equipment or property damage.

CAUTION

DO NOT operate the engine brake until the engine oil temperature is above 86°F (30°C). Operation below 86°F (30°C) could cause severe damage to the engine. Idle the engine four minutes at approximately 1000 rpm to warm the engine before activating the engine brakes.

NOTE

If your vehicle is equipped with anti-lock brakes (ABS), operation of the compression brake (if turned ON) may be interrupted if the ABS system detects wheel-slip due to operation on slippery surfaces.

Ideally (on normal road surfaces), you should slow your vehicle with the compression brake (where permitted by law) and use the service brakes only for stopping completely. Operating this way will greatly prolong the life of the service brakes.

Compression Brake

Proper use of engine compression brakes.

With the compression brake switch ON, the brake automatically creates its braking effect when you remove your foot from the accelerator pedal.
The brake switch is located on the accessory dash panel. It controls whether the brake is ON (ready to slow the vehicle down) or OFF (no braking action).

1. Do not use the engine compression brake to slow the vehicle down when you are bobtailing or pulling an empty trailer.
2. Make sure the brake is OFF before starting the engine.
3. After the engine is started, warmed up and you are ready to get under way, turn the engine compression brake switch ON for added braking effect.

NOTE

If your vehicle is equipped with the Eaton Vorad® system, operation of the compression brake may be automatically activated.

Compression Brake Controls

Using the compression brake controls.

There are two switches on the dash panel that control the engine compression brake. A master switch turns the system ON or OFF. A second switch, located next to the master switch, controls the braking effect. This switch allows you to choose

 https://truckmanualshub.com/

progressively stronger braking to slow the vehicle down.
Engine compression brake controls include:

- ON/OFF switch
- Three-position selector switch
- Clutch switch
- Throttle sensor
- Service brake pressure switch
- Eaton Vorad® Anti-Lock Braking System

Engaging conditions for the engine compression brake:

- Engine speed must be above 1,000 RPM.
- Coolant temperature must be above 59°F (15°C).

Deactivation conditions for the engine compression brake:

- Accelerator pedal is depressed.
- Clutch pedal is depressed.
- Engine speed falls below 800 RPM.
- ABS control is active.
- ECM recognizes a system problem.

CAUTION

Operating the engine with a compression brake that will not automatically deactivate (i.e. when the dash switch is OFF, clutch pedal is depressed or throttle is applied) will cause severe internal engine damage. Do not operate the engine if the compression brake will not deactivate. Failure to comply may result in equipment or property damage.

Engine Compression Brake Level Switch Operation

How to operate the compression brake.

There are two switches that control your vehicle's engine compression brake. One switch turns the system ON/OFF and the second switch controls the braking level. These switches are located on the dash switch panel.
For the three-position engine compression brake level switch, there will be 100 percent engine braking when the switch is in the up (HIGH) position. In the middle (MEDIUM) position, there will be 66 percent engine braking. In the down (LOW) position there will be 33 percent engine braking.
With the compression brake switch ON, the compression brake will be engaged when the service brake is applied. If the cruise control is operated in conjunction with the compression brake, the compression brake will engage to maintain the cruise set speed.

Compression on\off

Compression setting

Driving

Introduction and important information about operating your vehicle safely.

Correct care of your engine will result in longer life, better performance, and more economical operation.
Follow the daily maintenance checks listed in *Engine Maintenance* on page 29.
Check the engine oil pressure and engine coolant gauges, warning lamps, and other gauges daily to make sure they are operational. Normally each gauge will make a full sweep when ignition key is cycled ON to indicate that the gauge is operating correctly.

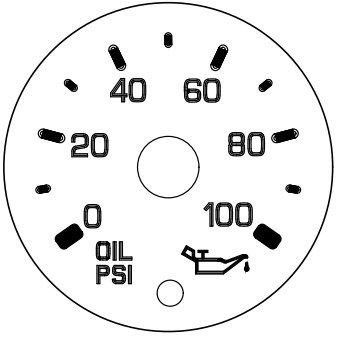

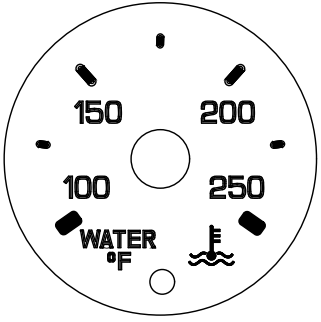

WARNING

Combustible vapors near the air intake system could be ingested into the engine, causing the engine to suddenly accelerate and overspeed. This condition could result in operator losing control of the vehicle if an unexpected increase in engine RPM occurs. Combustible vapors could also cause a fire. Do not operate your vehicle in an area where combustible chemicals or vapors may be present. Failure to comply may result in death, personal injury, equipment or property damage.

NOTE

IT IS THE RESPONSIBILITY OF THE OWNER AND OPERATOR TO OPERATE THE VEHICLE IN A SAFE ENVIRONMENT.

 https://truckmanualshub.com/

NOTE

If the engine is running, do not increase engine speed (rpm) or operate the vehicle until the low oil pressure warning lamp turns off.

CAUTION

Engaging the starter motor for more than 30 seconds in any five minute period may cause it to overheat and can damage the starter.

- If starter is engaged continuously for 30 seconds, you must wait five minutes before trying to start the engine to allow the starter motor to cool down.

With the key in the ON position, the engine warning lamps will come on momentarily and then go out. The engine warning lamps include:

Or

Check engine lamp; yellow in color.

Stop engine lamp; red in color.

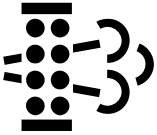

Diesel particulate filter (DPF) status indicator; yellow in color.

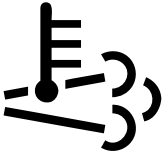

High exhaust system temperature (HEST); amber in color.

Normal Starting Procedure

Steps for starting the engine in normal temperatures.

Follow this engine starting procedure when the outside temperature is above 50° F (10° C).

1. Ensure the parking brake is set ON and the transmission shift lever is in neutral. For automatic transmissions, be sure the shift lever is in the neutral position (N). For automatic transmissions that have park (P) position, place the shift lever in park.
2. With the accelerator pedal in the idle position, turn the ignition key to the START position to start the engine.
3. If the engine does not start after 10 seconds, release the key. Wait an additional 10 seconds to allow the starter motor to cool, then try staring the engine again.
4. Once the engine has started, wait for the oil pressure to rise, and the low oil pressure warning lamp to turn off, before increasing RPM.

If the engine does not start, or runs erratically, see *Starting After the Fuel Tank*

Has Run Dry or After Fuel System Service has been Performed on page 62

Cold Weather Starting

Steps for starting the engine in cold temperatures.

Follow this engine starting procedure when the outside temperature is below 50° F (10° C).

CAUTION

To reduce the possibility of damage to the lubricating oil pan, due to the materials used in the manufacture of the lubricating oil pan, under no circumstances should an external heat source be applied directly or indirectly to the lubricating oil pan.

1. Follow the *Normal Starting Procedure* on page 20.

Refer to the vehicle operator's manual instructions for any additional cold weather starting procedures.

2. If starting a cold engine, slowly increase the engine speed. This provides adequate lubrication to the bearings and gives ample time to allow the oil pressure to stabilize.

CAUTION

The use of starting aids, such as ether, may result in damage to the engine and aftertreatment system.

If an engine must idle for an extended period of time, it should be done at a fast idle (1,000 RPM maximum) at coolant temperatures below 150°F (70°C).

3. For coolant temperatures below 150°F (70°C), use a low gear and drive at moderate engine speed until the engine coolant has reached operating temperature. Do not let the engine idle longer than necessary.

CAUTION

Do not operate the engine at low idle for long periods of time when the coolant temperature is below the normal operating range. This could result in the following:

- Fuel dilution of the lubricating oil.
- Carbon buildup in the combustion chamber.
- Sticking of the valves in the cylinder head.
- Reduced performance.
- Damage to aftertreatment components.

Starting Procedure After Extended Shutdown or Oil Change

Guideline on starting the engine after prolonged shutdown or oil change.

After extended shutdown or an oil change follow the *Normal Starting Procedure* on page 20.

Operating the Engine

After the engine starts:

Monitor the oil pressure and coolant temperature gauges frequently. Refer to *Engine Oil Specifications* on page 40 and *Engine Coolant Specifications* on page 45 for recommended operating pressures and temperatures. Shut off the engine if any pressure or temperature does NOT meet the specifications.

 https://truckmanualshub.com/

Engine Operating Range

Information on operating the engine at proper RPM.

CAUTION

Operating the engine at full throttle below peak torque will shorten engine life to overhaul, can cause serious engine damage, and is considered engine abuse. DO NOT operate the engine at full throttle operation below peak torque rpm for more than 30 seconds. Failure to comply may result in equipment or property damage.

PACCAR engines are designed to operate at full throttle under momentary conditions down to peak torque engine speed. This is consistent with recommended operating practices.

CAUTION

Operating the engine beyond the maximum engine speed can cause severe engine damage. Use proper operating techniques for the vehicle to prevent engine overspeed. See Engine Specifications for maximum engine speed. Failure to comply may result in equipment or property damage.

NOTE

For applications with high idle-time, to help reduce soot loading in the after-treatment system, avoid long periods of idling. If idling is required, increase idle-speed using the cruise control function.

Engine Shutdown

Before stopping the engine follow these precautions.

NOTE

DO NOT shut off the engine immediately. A hot engine stores a great amount of heat and it does not cool down immediately after it is shut off. Always cool the engine down before shutting it off. You will greatly increase its service life.

Idle the engine at 1,000 RPM for four minutes. Then low idle for 30 seconds before shutdown. This will allow circulating coolant and lubricating oil to carry heat away from the cylinder head, valves, pistons, cylinder liners, turbocharger, and bearings. This way you can prevent engine damage that may result from uneven cooling.

Electromagnetic Interference

Information on electromagnetic interference (EMI).

If not installed correctly, some vehicle accessories (CB radios, mobile transmitters, etc.) can generate and use radio frequency energy that may cause electromagnetic interference (EMI) between the accessory and the electronically controlled fuel system. Under these conditions, PACCAR is not liable for any performance problems with either the fuel system or the accessory. EMI is not considered by PACCAR to be an engine failure and therefore is not warrantable.

System EMI Susceptibility

PACCAR products are designed and tested for minimum sensitivity to incoming electromagnetic energy. The fuel system

EMI susceptibility has been designed with a high tolerance against EMI and in most normal circumstances, if not all, electromagnetic energy-emitting devices that meet the Federal Communications Commission legal requirements should cause no interference.

System EMI Radiation Levels

Electronic components are required to pass various PACCAR and industry EMI specifications. Our testing has shown that when the engine is properly installed and maintained, it will not interfere with properly installed onboard communication equipment.
If any interference condition is noticed, follow these suggestions to reduce the amount of EMI:

1. Locate the accessory receiving antenna further away.
2. Check with the accessory supplier representative in your area to:
   - Accurately calibrate the accessory for proper frequency, power output, and sensitivity.
   - Determine the optimum antenna location by obtaining antenna reflective energy data measurements.
   - Ensure that the optimum antenna type and mounting arrangement is being used.
   - Ensure the accessory equipment is properly constructed for maximum filtering to reject incoming electromagnetic noise.

Operating on Level and Dry Pavement

Tips for driving on level and dry roads.

WARNING

Do not use the engine brake when operating on road surfaces with poor traction (such as wet, icy, or snow covered roads or gravel). Retarders can cause the wheels to skid on a slippery surface. You could lose control of the vehicle and/or jackknife if the wheels begin to skid, resulting in an accident. Failure to comply may result in death, personal injury, equipment or property damage.

WARNING

Do not operate the engine compression brake when driving/operating your vehicle bobtail or with a loaded or unloaded trailer on road surfaces with poor traction (wet, icy, or snow covered roads) or in heavy traffic. There may not be enough weight on the rear axle to provide traction. Braking caused by the normal operation of the engine compression brake could cause you to lose control of the vehicle, resulting in an injury accident. Make sure the engine brake is switched "OFF" when bobtailing or with an unloaded trailer. Failure to comply may result in death, personal injury, equipment or property damage.

Remove Foot from Accelerator

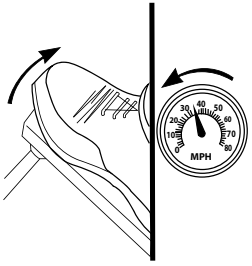

 https://truckmanualshub.com/

To reduce vehicle speed, put the engine brake ON/OFF switch in the "ON" position. Remove your foot from the accelerator pedal and clutch pedal. The engine brakes will immediately begin to operate, slowing the vehicle.
For operation on dry and relatively flat surfaces, when greater retarding power is not required, put the two-position selector switch in the "LOW" position.
For operation on dry pavement when maximum retarding power is required, put the three-position selector switch in the "HI" position.

Operating on Grades and Dry Pavement

Tips for driving on grades and dry roads.

WARNING

The engine brake is not intended as the primary brake for the vehicle, nor is it an emergency brake. The service brakes must be used in an emergency. Relying solely on the engine brake to stop the vehicle in an emergency could cause an accident and lead to personal injury. The engine brake only helps the service brakes by using pressure to slow the drive train. You must use the service brakes for quick or emergency stops. Failure to comply may result in death, personal injury, equipment or property damage.

"Control speed" is the speed at which the forces pushing a vehicle down a grade are equal to the forces holding it back.

Do Not Exceed Governed Engine Speed

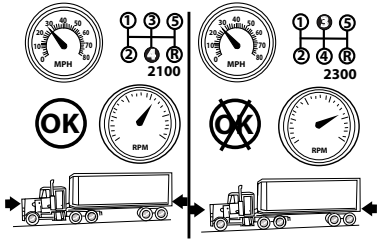

WARNING

Do not use the engine brake when operating on road surfaces with poor traction (such as wet, icy, or snow covered roads or gravel). Retarders can cause the wheels to skid on a slippery surface. You could lose control of the vehicle and/or jackknife if the wheels begin to skid, resulting in an accident. Failure to comply may result in death, personal injury, equipment or property damage.

CAUTION

The engine ECM maintains a record of maximum rpm. Exceeding the maximum rpm will be considered driver abuse and will affect the engine warranty. See Engine Spcifications.

WARNING

DO NOT use an exhaust brake when driving bobtail or with an unloaded trailer. There may not be enough weight on the rear axle to provide traction. This could cause a loss of control and jackknife resulting in an injury accident. Make sure the exhaust brake is switched “OFF” when bobtailing or with an unloaded trailer. Failure to comply may result in death, personal injury, equipment or property damage.

CAUTION

Never exceed governed engine speed because engine damage can occur. Operating engine beyond the governed speed causes additional strain on valve train and internal engine components. Operate the engine within governed engine speed.

NOTE

Once you have determined what the safe speed is for your vehicle, operate the engine brakes with the transmission in the lowest gear that will not cause the engine speed to exceed the rated engine speed. The optimum braking power of the engine brakes is reached at rated engine speed. Correct gear selection, therefore, is critical.

The selector switch can be used to vary braking power as road conditions change. Vehicle service brakes must be used when additional braking power is required.

Slow Down Around Curves

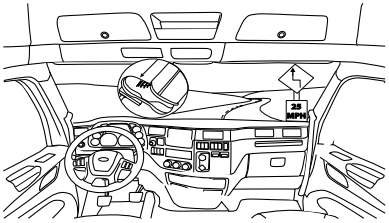

The engine brake is **NOT** intended as the primary brake for the vehicle, nor is it an emergency brake. The engine brake only helps the service brakes by using pressure to slow the drivetrain. Use the service brakes for quick stops.

Braking Truck on Grade

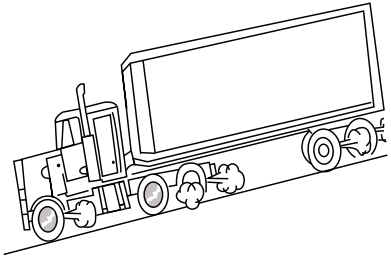

 https://truckmanualshub.com/

WARNING

Do not drive with frequent or continuous use of the service brakes. This can overheat the brakes and result in excessive lining wear, increased stopping distances, possibly an accident and may lead to personal injury. Before descending a steep grade, shift to a lower gear, keep the vehicle speed low, and avoid continuous application to the brakes. Failure to comply may result in death, personal injury, equipment or property damage.

NOTE

The longer or steeper the hill, the more important it is to use your engine brakes. Make maximum use of your engine brakes by gearing down and letting the engine brakes do the work.

Shift to a Lower Gear on Grade

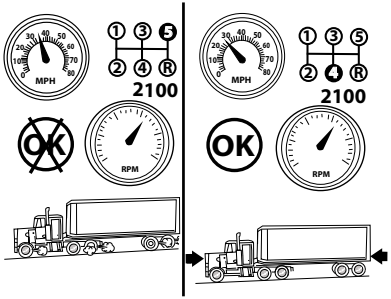

If frequent use of the vehicle service brakes is required, it is recommended that a slower control speed be used by selecting a lower transmission gear.

Tips for Operation on Slick Roads

WARNING

To reduce the possibility of personal injury or property damage, always allow for extra distance between your vehicle and other objects when using the service brakes or engine brakes on slick roads.

The operation of any vehicle is difficult to predict on slick roads. The first 10 to 15 minutes of rainfall are the most dangerous, as road dirt and oil mixed with rain create a very slippery surface.

WARNING

Do not use any of the vehicle's retarders in any situation that requires an immediate stop and/or in situations of poor traction (such as wet, icy or snow covered roads). Trying to use the retarder instead of the service brakes may cause a loss of vehicle control, which may result in an accident involving death or personal injury.

When driving on slick roads, start with the "ON/OFF" switch in the "OFF" position and the two-position selector switch in the "LOW" position. If your tractor is equipped with a twin-screw rear axle, position the power divider switch in the "unlocked" position. Remove your foot from the accelerator pedal to make sure the vehicle will maintain traction with the retarding power of the engine alone. If the vehicle drive wheels begin to skid or if there is a fishtailing motion, DO NOT activate the engine brakes. If traction is maintained

using the retarding power of the engine alone and more braking power is required, switch the two-position selector switch to the “LOW” position and activate the engine brakes by switching the “ON/OFF” switch to the “ON” position. If the vehicle’s drive wheels begin to skid or there is a fishtailing motion, switch the “ON/OFF” switch to the “OFF” position. If traction is maintained when the engine brakes are activated and more braking power is required, move the two-position selector switch to the “HI” position. Again, if the vehicle has lost traction or if there is a fishtailing motion, switch the “ON/OFF” switch to the “OFF” position. DO NOT attempt to use the engine brakes in the “HI” position.

https://truckmanualshub.com/

Chapter 2 | ENGINE MAINTENANCE

In this Chapter:

Maintenance Requirements..... 29
Maintenance Schedule.....31
Engine Specifications.....37
Engine Lubricating Oil Recommendations and Specifications.....39
Engine Oil Specifications..... 40
Engine Lubrication and Filter Intervals.....40
Cooling System Maintenance..... 42
Engine Coolant Specifications..... 45
Extended Life Coolant.....45
Fuel Recommendations..... 46
Warranty and the Use of Biodiesel Fuel.....48
Recommendations to Avoid Fuel Gelling..... 48
Maintenance Procedures..... 49
Engine Identification.....80

https://truckmanualshub.com/

Maintenance Requirements

Engine Maintenance

Introduction and important maintenance requirements.

PACCAR recommends that the engine be maintained according to the maintenance schedule in this section.
If the engine is operating in ambient temperatures below 0°F (-18°C) or above 100°F (38°C), perform maintenance at shorter intervals. Shorter maintenance intervals are also required if the engine is operated in a dusty environment or if frequent stops are made.
Some of these maintenance procedures require special tools or must be completed by qualified personnel. Contact your local PACCAR authorized repair location for detailed information.
If your engine is equipped with a component or accessory not manufactured by PACCAR Inc, refer to the component manufacturer's maintenance recommendations.

WARNING

Never idle your vehicle for prolonged periods of time if you sense that exhaust fumes are entering the cab. Investigate the cause of the fumes and correct it as soon as possible. If the vehicle must be driven under these conditions, drive only with the windows open. Failure to repair the source of the exhaust fumes may result in death, personal injury, equipment or property damage.

WARNING

Exhaust fumes from the engine contain carbon monoxide, a colorless and odorless gas. Do not breathe the engine exhaust gas. A poorly maintained, damaged or corroded exhaust system can allow carbon monoxide to enter the cab. Entry of carbon monoxide into the cab is also possible from other vehicles nearby. Failure to properly maintain your vehicle could cause carbon monoxide to enter the cab, resulting in death or personal injury.

Cleaning the Engine

Engine cleaning precautions.

When cleaning the engine, follow the instructions from the vehicle manufacturer operator's manual and observe all environmental protection regulations.

CAUTION

Do not direct water onto electrical components, plug connectors, seals or flexible hoses on the engine. Water may enter the part causing electrical damage or contaminating the engine oil. To prevent damage to engine components, keep the water moving at all times while cleaning the engine. Failure to comply may result in equipment damage.

Daily or Refueling Maintenance Checks

Engine Fuel Filter / Water Separator

Daily and refueling maintenance check for the engine fuel filter/water separator.

Automatic water drain, no maintenance required.

https://truckmanualshub.com/

Chassis Fuel Filter / Water Separator

Daily and refueling maintenance check for the chassis fuel filter/water separator.

This procedure should be followed as part of daily and refueling maintenance checks.

1. Drain trapped water (if equipped).

Air Intake Piping

Daily and refueling maintenance check for engine air intake piping.

This procedure should be followed as part of daily and refueling maintenance checks.

1. Inspect hose/pipe condition – deterioration/signs of leaking.
2. Inspect hose clamps for tightness and pinching/cutting of hoses.
3. Inspect clearance to other components.
4. Check air restriction gauge.

Aftertreatment Exhaust Piping

Daily and refueling maintenance check for aftertreatment exhaust piping.

This procedure should be followed as part of daily and refueling maintenance checks.

1. Inspect for cracks.
2. Inspect for clearance to other components (i.e. electrical harnesses, etc.).
3. Inspect hose/pipe condition – deterioration/signs of leaking.

Cooling Fan

Daily and refueling maintenance check for engine cooling fan.

This procedure should be followed as part of daily and refueling maintenance checks.

1. Inspect for cracks.
2. Inspect for clearance to other components.

Coolant Level

Daily and refueling maintenance check for engine coolant level.

Replacement or top up coolant should have the same antifreeze concentration and corrosion inhibitor content as the original coolant in the cooling system. If operating in sub-freezing conditions, a 60/40 mix of antifreeze and distilled water may be substituted.
Always dilute antifreeze to the correct concentration based on freeze protection before adding it to the cooling system. Adding or using 100% antifreeze in a cooling system may result in cooling system plugging and overheating problems.
This procedure should be followed as part of daily and refueling maintenance checks. Perform the following steps to check the coolant level:

1. Check that vehicle is a on a level surface.
2. Ensure engine has not been run for several hours.

CAUTION

Due to thermal expansion the coolant level CANNOT be checked if the coolant is above ambient temperature or the engine has not completely cooled. The coolant level indicated on a warmed system will be inaccurate and can lead to low coolant conditions during cold-starts.

3. Check coolant level. It should be visible through the clear plastic surge tank.
4. Add coolant as necessary until proper level is reached.

See *Radiator Fill Procedure* on page 66 for coolant level indentifieres for different surge tanks.

> **NOTE**
>
> The pressure cap (on the side of the surge tank) should NEVER be removed. The fill cap (On the top, not the side of the surge tank) is the correct fill point.

Diesel Exhaust Fluid

Daily and refueling maintenance check of diesel exhaust fluid (DEF).

This procedure should be followed as part of daily and refueling maintenance checks.

1. Check level of diesel exhaust fluid.

> **NOTE**
>
> It is recommended to top up DEF when refueling. See Engine Aftertreatment Systems Operator's Manual for DEF information.

Visual Inspection of Engine

Daily and refueling visual check of engine.

This procedure should be followed as part of daily and refueling maintenance checks.

1. Check for any signs of fluid leaks.
2. Ensure all access caps/covers are installed and tight.

Bi-weekly Maintenance Check

Engine Oil Level Check

Routine maintenance check for engine oil level.

This procedure should be followed as part of routine maintenance checks.

1. See *Engine Oil Level* on page 49

Maintenance Schedule

Maintenance Schedule Intervals

Maintenance schedule intervals for normal and severe duty applications.

Engine Maintenance Intervals - Normal Duty/Line Haul

Maintenance Interval	Miles	Kilometers	Hours	Months
Less than 20 % Idle Time				

https://truckmanualshub.com/

Maintenance Interval	Miles	Kilometers	Hours	Months
A	37,000	60,000	1,125	6
B	75,000	120,000	2,250	12 (1 year)
C	150,000	240,000	4,500	24 (2 years)
D	225,000	360,000	6,750	36 (3 years)
E	300,000	480,000	6,750	36 (3 years)
F				
G	450,000	725,000	13,500	48 (4 years)
H	600,000	965,000	18,000	72 (6 years)
J	750,000	1,200,000	24,000	96 (8 years)
Greater than 20% Idle Time				
A	25,000	40,000	750	6
B	50,000	80,000	1,500	12 (1 year)
C	150,000	240,000	4,500	24 (2 years)
D				
E	300,000	480,000	6,750	36 (3 years)
F				
G	450,000	725,000	13,500	48 (4 years)

Maintenance Interval	Miles	Kilometers	Hours	Months
H	600,000	965,000	18,000	72 (6 years)
J	750,000	1,200,000	24,000	96 (8 years)

Engine Maintenance Intervals - Severe Duty/Vocational

Maintenance Interval	Miles	Kilometers	Hours	Months
A	15,000	24,000	400	6
B	30,000	48,000	800	12 (1 year)
C	60,000	96,000	1,600	24 (2 years)
D (Pick-up & Delivery/ Refuse)	90,000	144,000	1,600	12 (1 year)
D (Severe Duty/ Vocational)	120,000	192,000	3,200	24 (2 years)
E	150,000	240,000	4,500	24 (2 years)
F	300,000	480,000	9,000	36 (3 years)
G	450,000	725,000	13,500	48 (4 years)
H	As indicated by the system to the operator. Interval H is greater than or equal to interval E.			
J	750,000	1,200,000	24,000	96 (8 years)

https://truckmanualshub.com/

Maintenance Interval	Miles	Kilometers	Hours	Months
Vocational vehicle applications include: Agriculture, Concrete Mixers, Construction, Crane, Dumps, Emergency/Fire, Heavy Equipment, Loggers, Mining, Oil Field, Refuse, Pick-up & Delivery, Snowplows, and Wrecker.				

Preventative Maintenance Schedule

List of recommended maintenance tasks and intervals that should be performed.

Perform maintenance at whichever interval occurs first. At Maintenance Schedule Intervals, perform all previous maintenance checks that are due for scheduled maintenance.

NOTE

This maintenance schedule is for a normal duty cycle engine operation. Severe duty/vocational applications will need to adjust mileage, kilometer, hour, or time interval based on the Engine Lubrication and Filter Intervals.

NOTE

Due to the design of the crankcase ventilation module, routine service of this component is not required.

Engine Maintenance Schedule

Component [2]	Maintenance Task	Recommended Preventative Maintenance Interval								
		A	B	C	D	E	F	G	H	J
Aftertreatment System	*Diesel Particulate Filter (DPF) Dry Cleaning* on page 72 - Dry Cleaning Strategy					•				
	Diesel Particulate Filter (DPF) Wet Cleaning on page 73 - Wet Cleaning Strategy								•	
	Diesel Exhaust Fluid (DEF) Filter on page 73						•			
Air System & Compressor	*Air Compressor* on page 75	•								
	Air Cleaner on page 75	•								
Charge Air System	*Charge Air Piping* on page 75	•								
	Charge Air Cooler on page 75	•								
Charging / Cranking System	*Electrical Harness / Cables* on page 78	•								
	Batteries, Cables, and Connections on page 78		•							

https://truckmanualshub.com/

Component [2]	Maintenance Task	Recommended Preventative Maintenance Interval								
		A	B	C	D	E	F	G	H	J
Cooling System	*Coolant/Antifreeze Condition* on page 64	•								
	Radiator Hoses on page 65			•						
	Replace Coolant Filter on page 65						•			
	Change *Extended Life Coolant* on page 45									•
Crankshaft	*Crankshaft - Vibration Damper* on page 78			•						
Drive Belts	*Engine Belt Checks* on page 69		•							
	Fan Belt Tensioner on page 69		•							
	Poly V-belt and Fan Drive Belt Removal on page 70 - Replace							•		
Engine Lubrication – Line Haul	*Engine Lubrication and Filter Intervals* on page 40		•							
Engine Lubrication – Severe Duty			•							
Crankcase Ventilation	Replace filter and o-ring gaskets if the CCV is serviceable. See *Crankcase Ventilation (CCV) Module Maintenance* on page 56 to determine if your engine has a serviceable CCV				•					

Component [2]	Maintenance Task	Recommended Preventative Maintenance Interval								
		A	B	C	D	E	F	G	H	J
Fuel System	*Fuel Filter* on page 60 - Replace [1]		•							
Mounting Bolts	*Engine Mounting Bolts* on page 78			•						
Valves	See *Engine Valves* on page 79 for recommended maintenance intervals.									

Engine Specifications

Engine specifications including horsepower, firing order, displacement, weight, and other engine characteristics.

PACCAR MX-11 Engine Specifications

Horsepower	See EPA Label on top of the valve cover or on the mixer manifold.
Firing Order	1, 5, 3, 6, 2, 4
Crankshaft Rotation (viewed from front of engine)	Clockwise

1 Use of poor quality fuel may require more frequent fuel filter element service.

2 Follow the manufacturers' recommended maintenance procedures for the starter, alternator, batteries, electrical components, exhaust brake, charge-air cooler, radiator, air compressor, air cleaner, refrigerant compressor, and fan clutch.

https://truckmanualshub.com/

Displacement	659 CID (10.8 liters)
Bore and Stroke	4.84 in. (123 mm) × 5.97 in. (152 mm)
Dry Weight (excludes flywheel and air compressor)	2,178 lb. (988 kg.)
Idle Speed	Approximately 600–750rpm
High Idle speed	2,200 rpm
Maximum continuous engine speed with engine brake active	2,100 rpm
Fault code registers with engine brake active	2,300 rpm
Maximum Continuous No Load Governed Speed	2,200 rpm
Engine Over Speed	2,301 to 2,499 rpm
Misuse	2,300 rpm or greater
FEPTO Rotation and Ratio	Clockwise, 1:1
FEPTO Torque Limit	516 lb-ft (continuous)
REPTO Torque Limit	Clockwise, 1.3:1 (1 o’clock) 1.46:1 (11 o’clock)
REPTO Torque Limit (1 o’clock)	738 lb-ft (Max), 590 lb-ft (continuous)
REPTO Torque Limit (11 o’clock)	184 lb-ft (continuous)

Filter Specifications

Use of non-genuine filters.

PACCAR is not responsible for problems caused by non-genuine filters that do not meet PACCAR performance or durability requirements.

Contact your local PACCAR authorized repair location for specific part numbers.

https://truckmanualshub.com/

CAUTION

Use of non-genuine oil filters can cause severe engine damage.

Engine Lubricating Oil Recommendations and Specifications

PACCAR engine oil type, viscosity, and additives.

A major factor in maintaining engine performance and durability is the proper use of quality engine lubricating oils used in conjunction with the appropriate oil drain and filter change intervals. Attempting to extend the oil and filter change interval beyond the manufacturers recommendations may decrease engine life due to factors such as corrosion, deposits, and wear.
See Engine Lubrication and Filter Intervals to determine which oil drain interval to use for an application.

NOTE

It is the operator's responsibility to follow these recommendations to ensure that the engine warranty is not affected.

PACCAR recommends the use of high-quality SAE 10W-30 API CK-4/CJ-4 heavy-duty engine oil.
The primary PACCAR recommendation is for the use of 10W-30 multigrade lubricating oil for normal operation at ambient temperatures above 5°F (-15°C). For ambient temperatures below 5°F (-15°C) SAE 5W-30 may be used, provided it meets API CK-4/CJ-4 oil specifications and biodiesel or biodiesel blended fuel is not used as fuel for the engine. Using a multigrade oil helps improve engine cranking in low-temperature conditions, reduces deposit formation and increases engine durability.

Engine Oil Viscosity Chart

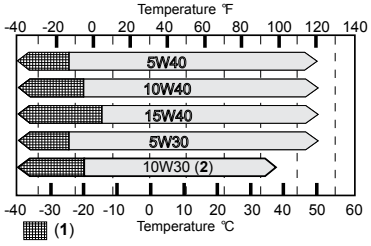

1. If engine is equipped with an active oil pan heater, use before engine start.
2. Initial factory oil fill: API CK-4 10W-30

NOTE

Any of the oil weights listed in the chart above are acceptable to use as long as the oil meets API CK-4/CJ-4 oil specifications.

New Engine Break-In Oils

PACCAR does not approve the use of special "break-in" engine lubricating oils for new or rebuilt PACCAR engines. It is recommended to use the same lubricating

https://truckmanualshub.com/

oil for engine break-in that will be used during normal operation.

Aftermarket Oil Additive Usage

PACCAR does not recommend the use of aftermarket oil additives. Today's high-quality engine lubricating oils are very sophisticated. Most oils already contain precise amounts of additives blended into the lubricating oil to meet stringent performance requirements.
These oils meet performance characteristics that conform to the lubricant industry standards and are sufficient protection when used according to the recommendations. Aftermarket lubricating oil additives are not necessary to enhance engine oil performance and may in some cases reduce the oil's capability to protect the engine.

Engine Oil Specifications

Engine oil system specifications.

Engine Oil Specifications for PACCAR MX-11

Oil Pressure at Low Idle (min allowable) 650 -50/+100 rpm	14.5 psi at 239°F (100 kPa at 115°C) oil temperature
At Road Speed 900-1300 rpm (min allowable)	22-33 psi at 239°F (150 -230 kPa at 115°C) oil temperature
At Road Speed 1300-2100 rpm (min allowable)	33 psi at 239°F (230 kPa at 115°C) oil temperature
Regulated Oil Pressure (nominal)	37 psi at 239°F (260 kPa at 115°C) oil temperature
Total System Capacity (oil pan and new oil filters)	38.5 U.S. qts (36.5 liters)

Engine Lubrication and Filter Intervals

Oil change intervals for normal and severe duty applications.

Oil drain interval recommendations are based on vehicle application or engine duty cycle. PACCAR recommends the use of high quality lubricating oil as indicated in the Engine Lubricating Oil Recommendations and Specifications section.
Perform these maintenance procedures according to the Preventive Maintenance Schedule.

https://truckmanualshub.com/

CAUTION

Extending the oil and filter change interval beyond the recommendations will decrease the engine life due to factors such as corrosion, deposits, and wear. Engine oil filters capture dirt and remove deposits from the oil to prolong the life of internal moving components. Follow the oil and filter change intervals as recommended in this section of the manual. Failure to comply may result in equipment or property damage.

Determining Type of Vehicle Application for Engine Oil Drain Intervals

	Severe Duty - Vocational *	Normal Duty - Line Haul
Fuel Consumption	Less than 6 MPG (2.6 km/L)	6 MPG (2.6 km/L) or greater
Gross Vehicle Weight	Greater than 80,000 lb. (36,300 kg)	80,000 lb. (36,300 kg) or less
* Vocational vehicle applications include: Agriculture, Concrete Mixers, Construction, Crane, Dumps, Emergency/Fire, Heavy Equipment, Loggers, Mining, Oil Field, Refuse, Pick-up & Delivery, Snowplows, and Wrecker.		

https://truckmanualshub.com/

Engine Oil and Filter Change Intervals

	Vehicle Application	Change Interval
Oil Drain and Filter Replacement Interval	Normal Duty (Line Haul) - less than 20% idle time	75,000 miles (120,000 km) 2,250 hours or 12 months
	Normal Duty (Line Haul) - more than 20% idle time	50,000 miles (80,000 km) 1,500 hours or 12 months
	Severe Duty (Vocational*)	30,000 miles (48,000 km) 800 hours, or 12 months
* Vocational vehicle applications include: Agriculture, Concrete Mixers, Construction, Crane, Dumps, Emergency/Fire, Heavy Equipment, Loggers, Mining, Oil Field, Refuse, Pick-up & Delivery, Snowplows, and Wrecker.		

NOTE

If B6-B20 biodiesel fuel is used, the oil and filter must be changed every 40,000 mi (64,000 km) for line haul applications; every 20,000 mi (32,000 km) for severe duty, or every six months.

Cooling System Maintenance

Information about concentration and condition of coolant, including filter.

https://truckmanualshub.com/

The cooling system in your vehicle was factory filled with extended life coolant that meets or exceeds all ASTM D6210 and Caterpillar EC-1 requirements. PACCAR recommends only using a 50/50 mixture of distilled water and ELC when cooling system service is required. A 50/50 mixture of ELC and distilled water will provide freeze protection down to –34°F (–36.7°C), which is adequate for most locations in North America. For extremely cold operating conditions, a 60/40 mixture (coolant/water ratio) can be used to provide freeze protection down to -62°F (-52.2°C).
Unless otherwise optioned, factory fill coolant is an ethylene glycol, nitrited organic acid technology (NOAT) extended life coolant (ELC) formulation at a 50:50 coolant-to-distilled water mixture. The factory fill exceeds ASTM D6210 and Caterpillar EC-1 requirements. Maintaining coolant chemistry and freeze protection is critical to engine and cooling system component health and longevity.

WARNING

Coolant is toxic. DO NOT get the fluid in eyes. If contact occurs, flood eyes with large amounts of water for 15 minutes. Avoid prolonged or repeated contact with skin. In case of contact, immediately wash skin with soap and water. DO NOT take internally. If swallowed, seek immediate medical attention. DO NOT induce vomiting. Failure to comply may result in death, personal injury, equipment or property damage.

CAUTION

The engine cooling system has very specific maintenance and inspection requirements. Failure to follow requirements can damage the engine. Engine damage can include but is not limited to freezing, boiling, corrosion, pitted cylinder liners. This information is found in the engine manufacturers owner's manual. It is the owner's responsibility to follow all requirements listed in the engine manufacturers owner's manual.

NOTE

Coolant is harmful to the environment. Unused coolant must be stored as a toxic hazardous material in leakproof containers. Used coolant must be processed as industrial chemical waste. Please follow HAZMAT guidelines with both used and unused coolants.

CAUTION

Use of non-genuine coolant filters can cause severe engine damage.

Concentration

Check the level of freeze/boilover protection, which is determined by the glycol concentration. Use a glycol refractometer to determine glycol level. Add coolant to obtain the coolant/water ratio required to provide the protection you need. A 50/50 mix of coolant and water is adequate for most applications. For extremely cold operating conditions, the ratio can be adjusted to a higher concentration of coolant.

https://truckmanualshub.com/

NOTE

Maximum recommended ELC concentration is 60% ELC and 40% water by volume (a 60/40 coolant mixture). The minimum recommended concentration is 40%.

Glycol Concentration Level

Level	Desired Coolant / Water Ratio	Freeze Point °F (°C)
Recommended Levels	40%	-12 (-24)
	45%	-23 (-31)
	50%	-34 (-37)
	55%	-50 (-46)
	60%	-62 (-52)

Condition

Perform a visual inspection of the coolant. It should have no cloudiness or floating debris. Determine the chemical inhibitor concentration level by using an extended life coolant specific test kit or test strips. Inhibitor concentration level determines corrosion protection. If you are concerned about possible coolant quality, contamination, or mechanical problems, submit a coolant sample for analysis. Improper maintenance may cause coolant degradation and could result in damage to the cooling system and engine components. Consult your dealer or the coolant manufacturer's representative for recommended extended life coolant test kits, test strips, and laboratory sample procedures.

Coolant Extender

Add extended life coolant extender, if necessary, according to the corrosion inhibitor concentration required. DO NOT add coolant extender to nitrite-free coolant.

Checking Coolant Level

Check the coolant level daily. See *Coolant Level* on page 30. When adding coolant, avoid mixing different brands and formulations. If the coolant is mixed with more than 25% of a different formulation, engine corrosion damage could occur. If mixing exceeds 25% of total system volume, it is recommended to flush and refill the system completely with one type of coolant.

Coolant Filter

Your engine is equipped with a coolant filter designed to capture and remove harmful deposits from the cooling system to help prolong system life. It is a "blank filter" and does not contain chemicals or time-release additives. Replace it only with a blank filter at the interval specified in the Preventative Maintenance Schedule. Never use filters that contain supplemental coolant additives (SCAs) in an ELC-filled system.

CAUTION

Use of non-genuine coolant filters can cause severe engine damage.

https://truckmanualshub.com/

Cooling System Sealing Additives and Soluble Oils

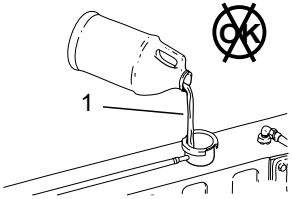

1. Do not use soluble oils or sealing additives.

CAUTION

The use of sealing additives or soluble oils in the cooling system can cause damage to the engine. These additives can plug various areas of the radiator, EGR system and oil cooler. The plugging of the cooling system can hamper heat transfer, causing internal engine damage. Do not use sealing additives or soluble oils in the cooling system. The use of sealing additives can:

- Build up in coolant low-flow areas.
- Plug the radiator and oil cooler.
- Damage the water pump seal.
- Damage heat transfer surfaces.
- Damage seals and hoses.
- Corrode brass and copper.

Failure to comply may result in equipment or property damage.

Engine Coolant Specifications

Engine capacity, pressure, and temperature specifications.

Engine Coolant Specifications for PACCAR MX-11

Coolant Capacity	Approx. 12.5 gallons[3] (47 liters)
Minimum Recommended Pressure Cap	15 psi (103 kPa)
Maximum Engine Coolant Outlet Temperature	223°F (106°C)

NOTE

Coolant volumes are dependent on chassis model and cab/ sleeper heater options.

Extended Life Coolant

Information on using Extended Life Coolant (ELC).

Perform these maintenance procedures according to the Preventative Maintenance Schedule.

- Conduct coolant maintenance checks including freeze point, pH, nitrite and carboxylate tests at least

[3] Varies with vehicle equipment

https://truckmanualshub.com/

twice annually to maintain engine protection.

Nitrited Extended Life Coolant

For nitrited formulations (NOAT), a heavy-duty extended life coolant that meets ASTM D6210 and Caterpillar EC-1 specifications must be used.
The change interval for extended-life coolant containing nitrite and molybdate is 750,000 miles (1,200,000 km) or 12,000 hours of on-road use (8 years or 15,000 hours of off-highway use) on initial fill with no extender added. The change interval is 1,000,000 miles (1,600,000 km)/20,000 hours/8 years with an extender addition at 500,000 miles (800,000 km)/10,000 hours/4 years.

Nitrite-Free Extended Life Coolant

Nitrite-free organic acid technology coolant (OAT) may be used if it meets DAF 74002. The change interval for nitrite free coolant is 600,000 miles (1,000,000 km) or 6 years, with no extender needed. DO NOT add coolant extender to nitrite-free coolant. Follow the coolant supplier's drain/flush/fill/diluting percentages when servicing a vehicle filled with nitrite-free coolant.
Additional Recommendations:

- Antifreeze is essential for freeze, overheat, and corrosion protection. The use of supplemental coolant additives (SCAs) is not recommended for extended-life coolants.

Recommended Extended Life Coolant Suppliers

Authorized PACCAR Engine dealer

Fuel Recommendations

Precautions and recomendations for selecting and using the right diesel fuel.

WARNING

The use of diesel fuel that has been mixed with other fuels may cause an explosion. DO NOT mix gasoline, alcohol, or gasohol with diesel fuel. Make sure you know your fuel source and use the recommended diesel fuel as indicated in this section of the manual. Failure to comply may result in death, personal injury, equipment or property damage.

CAUTION

Dirt or water in the fuel system can cause severe damage to both the fuel pump and the fuel injectors. Due to the precise tolerances of diesel injection systems, it is extremely important that the fuel be kept clean and free of dirt or water. Know your fuel source and make sure all steps are taken for dispensing or using clean fuel in your vehicle. Failure to comply may result in equipment or property damage.

CAUTION

Unapproved fuel can reduce economy or possibly damage fuel system components. Unapproved fuels typically do not have enough lubricity elements in the fuel to properly lubricate the fuel injection system. Be sure you follow the fuel recommendations as indicated in this section of the manual. Failure to comply may result in equipment or property damage.

CAUTION

Using diesel fuels blended with lubricants may cause damage to your exhaust aftertreatment system. Service intervals for aftertreatment systems will be reduced. DO NOT use diesel fuel blended with lubricating oil in engines equipped with an aftertreatment system. Failure to comply may result in equipment or property damage.

CAUTION

DO NOT use high-sulfur diesel fuel as it will damage the exhaust aftertreatment system. Also, the engine will not meet emission regulations. Use only ultra-low-sulfur diesel (ULSD) fuel. Failure to comply may result in equipment or property damage.

CAUTION

If ultra-low-sulfur diesel (ULSD) fuel is not used, the engine may not meet emission regulations, and damage may occur to the exhaust aftertreatment system. The use of high-sulfur diesel fuel will damage the exhaust aftertreatment system and impact the engine emission. ULSD fuel is required for correct operation of the aftertreatment. The engine has been optimized for use with an aftertreatment system together with ULSD fuel to meet the 2013 U.S. Environmental Protection Agency regulations. Failure to comply may result in equipment or property damage.

NOTE

PACCAR recommends that the cetane number of diesel fuel be a minimum of 45 for engines that are expected to operate at temperatures below 32ºF (0ºC) and a minimum of 42 for engines that are operated at temperatures above 32ºF (0ºC).

Using diesel fuel with a lower-than-recommended cetane number can cause hard starting instability, and excessive white smoke. To maintain satisfactory operation at low ambient temperatures, it is important to specify diesel fuel of the correct cetane number.

PACCAR requires all permissible fuels to have adequate fuel lubricity. Lubricity can be determined by ASTM, specification D6079, ISO 12156, High Frequency Reciprocating Rig (HFRR) in which the fuel must have a wear scar diameter of 0.02 in. (0.5 mm) or less.

The use of Ultra-low-sulfer-diesel (ULSD) fuel is required for this engine in order to

https://truckmanualshub.com/

meet emission regulations and to prevent damage to the engine and exhaust system. The use of other grades of diesel fuels other than ULSD fuel will be considered a use of incorrect fuel for the engine. PACCAR is not responsible for failures caused by the use of incorrect fuel, oil or DEF or by water, dirt or other containments in the fuel or DEF.

Warranty and the Use of Biodiesel Fuel

Biodiesel information and warranty precautions.

PACCAR Inc. approves the use of biodiesel fuel blends from 6 to 20 percent by volume in diesel fuel providing that the following conditions are met:

- The biodiesel used in the blend meets ASTM Standard D6751 or EN 14214 specifications.
- The biodiesel used in the blend is sourced from a BQ-9000 Accredited Producer.
- The finished blend meets the fuel properties of the ASTM Standard D975 (up to B5 blend) or D7467 (B6 to B20 blend).
- The engine oil and oil filter are changed per the modified schedule. See the Engine Preventative Maintenance Schedule.
- The fuel filter is changed every 25,000 miles/40,000 km.

The use of approved biodiesel fuel does not affect the PACCAR engine warranty. Failures caused by the use of non-approved biodiesel fuels or other fuel additives that are of unacceptable quality or do not meet specified industry standards are not considered as defects of parts or workmanship by PACCAR and therefore will not be covered by the PACCAR engine warranty.
PACCAR recommends that customers intending to use biodiesel blends become familiar with the additional handling considerations of these fuels such as ageing, metal compatibility and tendency to absorb water. Please reference the fuel supplier’s technical information or industry guidelines such as the American Trucking Association Truck Maintenance Council document RP 357.
In particular, operators should be aware that biodiesel blends are more prone to cold flow (gelling) and filter plugging issues compared to conventional diesel fuel. If vehicles are expected to be operated in temperatures below freezing, care should be taken to ensure that both the biodiesel fuel used and the appropriate vehicle fuel system accessory heaters are utilized. Operators should also be aware that biodiesel energy content (by volume) is lower than diesel which can reduce fuel economy by up to two percent.

Recommendations to Avoid Fuel Gelling

Information to prevent fuel gelling.

- Use appropriate fuel grade/blend for conditions.
- Specify vehicle with proper cold weather equipment (12v electric pre-heater, fuel blending valve, fuel coolant heater, 12v line heaters and tank heaters).

PACCAR does not recommend the use of fuel additives, however, should a customer decide there is a need for temporary use of a winter fuel additive, PACCAR offers the following guidance:

- Use an industry known, high quality product (EPA approved).

https://truckmanualshub.com/

- Only use the additive for the minimum time needed.
- Follow additive manufacturer's instructions exactly.
- Refuel with proper grade fuel as soon as possible.

Maintenance Procedures

Engine Oil Level

How to check engine oil level

To check engine oil level, park vehicle on level ground and wait 15 minutes after shutting off engine. After the engine is shut off it will take at least 15 minutes for all the engine oil to return to the sump.

> **NOTE**
>
> It takes approximately 15 minutes for all the oil to run into the sump when the engine is ‘warm.’ If the level is checked immediately after switching off the engine, the dipstick will show a low oil level.

Make sure that the vehicle suspension is sitting flat, both lengthwise and crosswise. Check this carefully on a vehicle with air suspension.
Engine coolant should be at or above the operating temperature of 180°F (82°C).
This procedure should be followed as part of routine maintenance checks.

1. Twist the dipstick handle to unlock it, then pull the dipstick out of the holder.

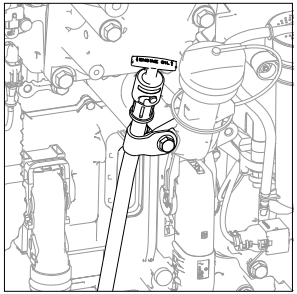

2. Wipe the dipstick clean with a lint-free cloth.
3. Reinsert the dipstick into the holder.
4. Remove the dipstick from the holder and check the oil level. The oil level should always be between the two marks on the dipstick.
5. Reinstall the dipstick and twist to lock it in place.

https://truckmanualshub.com/

Oil Level Indication on Dipstick

High and low marks on the dipstick indicate level of oil in the oil pan.

> **NOTE**
>
> On the engine oil dipstick, the difference between the low oil level mark (2) and high oil level mark (1) is 9.5 US quarts (9 liters).

Engine Oil Dip Stick Markings

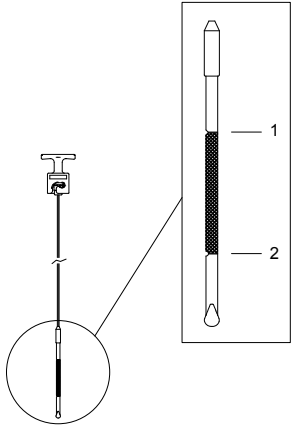

1. High oil level (1)
2. Low oil level (2)

Topping Up the Engine Oil

Steps for topping up the engine oil.

If checking the engine oil just after stopping the engine, wait 15 minutes for the oil to drain back into the oil pan before checking the fluid level.
This procedure should be followed when oil level is low and more oil needs to be added.

1. Top up with oil, if necessary, via the filler opening. Use the correct grade in the correct quantity.
2. After topping up, wait one minute and check the oil level again.
3. Reinstall the oil fill cap and twist to lock it in place.

> **NOTE**
>
> See *Lubricating Oil Recommendations and Specifications.*.

Engine Oil Fill Location

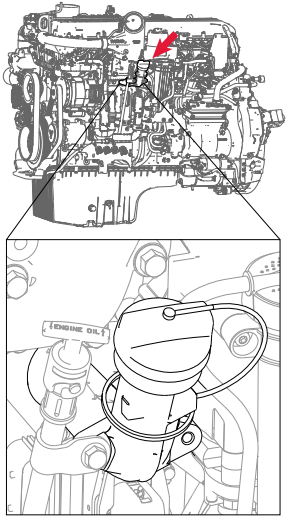

Oil Drain Plug for Composite Pan

What to do after draining oil.

After draining the oil, replace the drain plug if:

Oil Pan Drain Plug Installation

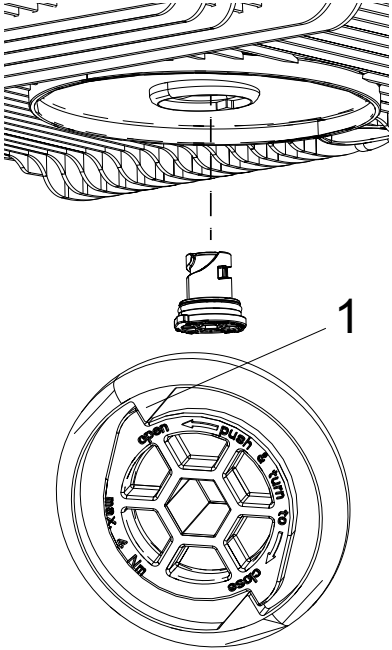

1. Stop

- The plug is leaking.
- The O-ring is missing.
- The plug/O-ring assembly is damaged.
- The retention detent cannot be felt during installation.

Torque the drain plug to its stop.

Oil Drain Plug Detent

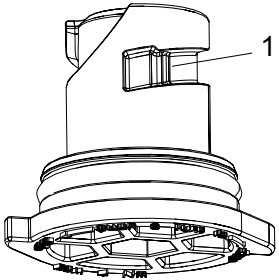

1. Detent

> **NOTE**
>
> This engine is equipped with a composite oil pan and drain plug. Care should be taken to avoid over-torquing the drain plug.

https://truckmanualshub.com/

Engine Oil Filter

Procedure for replacing engine oil filters.

Oil Filter Module

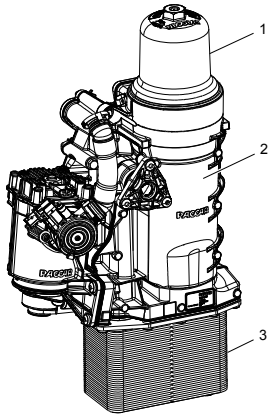

1. Centrifugal Oil Filter
2. Full-Flow Oil Filter
3. Oil Cooler Module

Your engine is equipped with a full-flow oil filter and centrifugal bypass oil filter. Both filters are designed to capture contaminants and remove deposits from the oil to prolong the life of internal moving components.

Always use quality engine lubricating oils in conjunction with the appropriate oil drain and filter change intervals. Refer to the “Preventative Maintenance Schedule” for the recommended oil and filter change service interval.

CAUTION

Use of non-genuine oil filters can cause severe engine damage.

Oil Filter Removal Preparation

Preparing for replacing engine oil filters.

This procedure should be followed before replacing engine oil filters.

CAUTION

Before beginning to remove and/or disconnect any components, wait at least 5 minutes after the key switch is turned OFF for the aftertreatment DEF dosing system to purge the DEF from the system. The DEF system purges to prevent damage from freezing. Failure to comply may result in equipment or property damage.

WARNING

Turn off the engine and place the ignition switch in the OFF position before disconnecting the battery clamps. DO NOT place any tools or other materials on top of or close to the batteries. This can cause a dangerous high current short circuit and, in the worst case, a battery explosion. Keep all objects away from the battery terminals. Always break the contact between the battery clamp and the negative terminal before working on the vehicle. Working on a vehicle while the battery is connected may result in electrical injury or damage. Always disconnect the battery at the negative terminal when performing service procedures. Failure to comply may result in death, personal injury or equipment damage.

https://truckmanualshub.com/

WARNING

Electrical shock hazard: Never disconnect the battery clamp when the engine is running. Disconnecting the battery clamps while the engine is running may result in death, personal injury or equipment damage from electrical arcing or damage to electrical components.

1. Disconnect the chassis battery cable at the negative battery terminal.
2. Place an oil collection pan directly under the oil filter.

Oil Filter Removal

Procedure for removing the oil filter on PACCAR MX-11 engines.

1. Clean the oil filter cap and surrounding area to ensure dirt does not fall into the oil filter module.

CAUTION

Dirt in the engine oil lubrication system can lead to significant damage to the engine. Failure to comply may result in equipment or property damage.

2. Remove the screw cap with the centrifugal oil filter from the oil module. Use a hexagonal socket or a box wrench to avoid damaging the oil filter cap.

Removing Oil Filter Cap

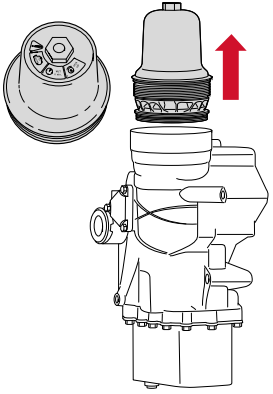

3. Turn the screw cap clockwise to unlock the centrifuge base.

Unlocking the Centrifuge Base

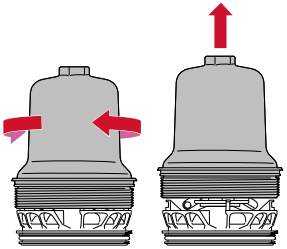

https://truckmanualshub.com/

4. Press the clips (1) and dismount the centrifugal oil filter element from the centrifuge base.

Removing Centrifugal Oil Filter

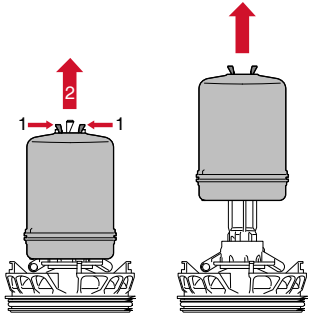

5. Remove the O-rings from the screw cap and centrifuge base.
6. Turn the lower cap ¼ turn to release the cap.
7. Remove the O-ring from the lower cap.
8. Remove the full-flow oil filter from the oil module.

Removing Full-flow Oil Filter

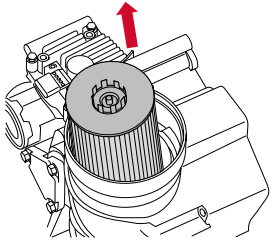

WARNING

Lubricating oil can cause skin irritation or skin injury. To prevent skin injury, avoid unnecessary contact with the lubricating oil. Wear protective clothing, eye wear and gloves when handling lubricating oil. Failure to comply may result in personal injury.

Oil Filter Installation

Procedure for installing oil filter on PACCAR MX-11 engines.

Use the following procedure to install oil filters.

1. Install the new full-flow oil filter element into the oil module.

Installing Full-flow Oil Filter

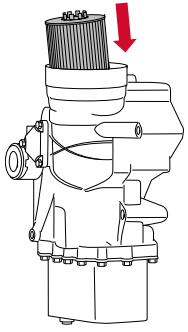

2. Using engine oil, lightly lubricate the new O-ring for the lower cap.
3. Install the new O-ring onto the lower cap.
4. Tighten the lower cap ¼ turn to lock the full-flow oil filter in place.

5. Install the new centrifugal oil filter element onto the centrifuge base.

Installing Centrifugal Oil Filter into Base

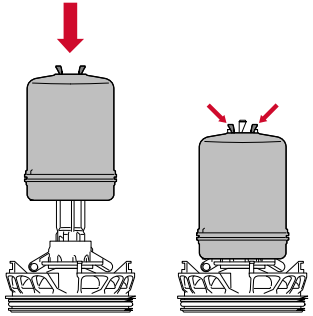

6. Mount the screw cap on the centrifuge base.
7. Turn the screw cap counterclockwise to lock it.

Installing and Locking Cap

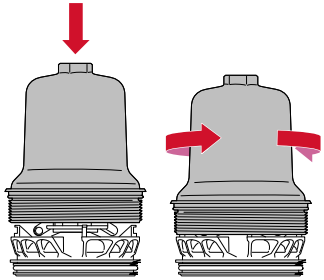

8. Lightly lubricate the new O-rings (1) with engine oil.
9. Fit the new O-rings (1) onto the screw cap (1) and onto the centrifuge base (2).

Installing O-rings onto Screw Cap and Insert into Base

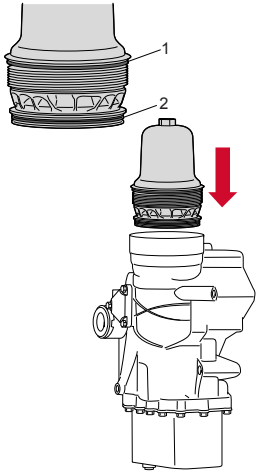

10. Position the screw cap carefully onto the oil module.
11. Tighten the screw cap by hand until it reaches the end position.
12. Tighten the screw cap to 52 lb-ft (70 N·m). Use a hexagonal socket, or box wrench, to avoid damaging the oil filter cap.

https://truckmanualshub.com/

After Replacing Engine Oil Filter(s)

Procedure for what to do after installing new oil filters.

Follow the steps below after installing new oil filters:

1. Reconnect the chassis battery cable at the negative battery terminal. See "Oil Filter Removal Preparation."
2. Add approved engine oil to the maximum level marked on the dipstick. If the engine is running a different weight of oil, be sure to top-off the engine oil with the same brand and viscosity of oil.
3. Start and run the engine for 5 to 10 minutes and check for any oil leaks.
4. Remove oil collection pan and dispose of any spillage properly.
5. Shut down the engine and check engine oil level and top up as necessary. See "Engine Oil Level."

Crankcase Ventilation (CCV) Module Maintenance

Servicing the CCV module.

This engine may be equipped with a servicable Crankcase Ventiflation Module (CCV). This emissions related component separates oil from air coming from the crank case vent. The unit sends the extracted oil back into the engine and provides clean vent air back into the air intake.
See the images below of the serviceable CCV. If the CCV on your engine does not match these images then your CCV is not servicable. If your CCV appears like these images, then remove and replace the filter and O-ring gaskets at the prescribed maintenance interval.

Serviceable CCV

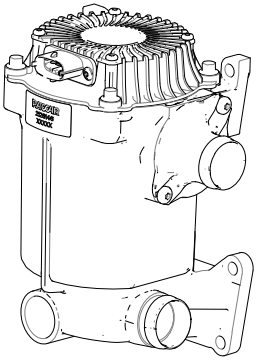

Non Serviceable CCV

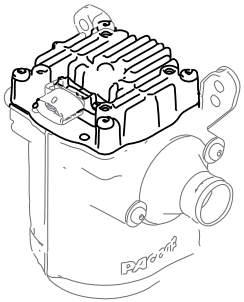

How to Remove a Crankcase Ventilation Module

Maintenance instructions for servicable Crankcase Ventilation (CCV) modules.

Follow the steps below to remove the CCV.

1. Disconnect the chassis battery cable at the negative battery terminal.
2. Place an oil collection pan directly under the CCV module.

3. Clean the CCV module and surrounding area to avoid dirt contaminating the module.

> **NOTE**
>
> Keep the new CCV module in its packaging until it's time to install it to the engine.

4. Disconnect the electrical connector and outlet hose.

Serviceable CCV - MX-11, Front

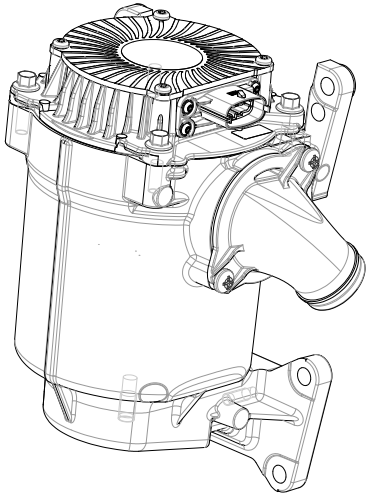

5. Remove the CCV module by unscrewing the six bolts using a ratchet with 13 mm socket.

> **NOTE**
>
> Be careful when removing the CCV to prevent an oil spill. Oil may be present in the CCV-to-engine interface.

6. Wipe the on-engine sealing interface with a clean, lint-free rag (not shown). Remove old face gasket.

CCV - MX-11 Mounting

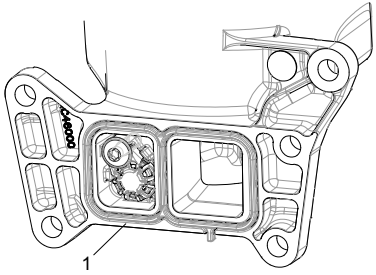

How to Disassemble a CCV

Disassembly instructions for servicable Crankcase Ventilation (CCV) modules.

Ensure that you have followed these steps *How to Remove a Crankcase Ventilation*

https://truckmanualshub.com/

Module on page 56 before proceeding with disassembling the unit.
Follow the steps below to disassemble the CCV to access to the replaceable filter and gaskets.

1. Lay the CCV module on a clean table with the engine interface facing down.
2. Unscrew the four bolts (1) using a ratchet with 10 mm socket.

CCV Filter/Motor Installation

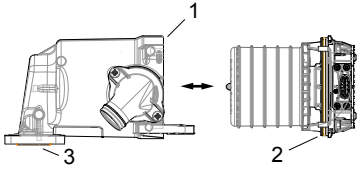

1. Housing
2. Motor
3. Mounting Flange
3. Remove the motor from the housing and take out the filter.

Do not remove the retaining ring e-clip from the shaft. The e-clip (1) being slanted is OK (2).

CCV Retainer Ring Installation

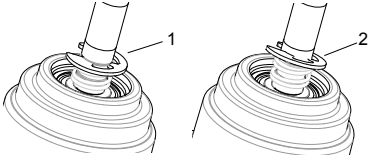

4. Remove the gasket from the motor as well as the gasket from the housing, and wipe the two gasket grooves with a clean, lint-free rag.
5. Properly dispose of the filter and gaskets.

How to Reassemble a CCV Unit

Reassembly instructions for servicable Crankcase Ventilation (CCV) modules

Follow the steps below to reassemble the CCV after the old filter and gaskets have been removed.

CCV Motor/Filter Assembly

Fit onto Shaft	Turn to Slide	Ensure Shaft Protrudes
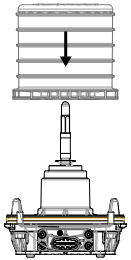	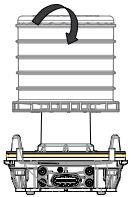	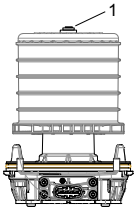

1. Install the new O-ring gasket on the motor and the new face gasket on the CCV-to-engine interface of the CCV housing. Lubricate the two gaskets with clean engine oil.
2. Orient the motor so that the shaft is facing upward.
3. Take the new filter assembly out of its packaging, fit it on the shaft and turn it so that it slides into the notch and shaft protrudes through the end of the filter.
4. Install the motor with the new filter in the housing in horizontal position. When reinstalling motor, ensure shaft and bottom bearing are aligned (1).

CAUTION

DO NOT force motor into the CCV housing, or damage to the bottom bearing may occur.

5. Tighten and torque the four bolts (1) using a torque wrench to 70.8 +/- 8.4 lb-in. (8.0 +/- 1.0 N·m).

CCV Filter/Motor Installation

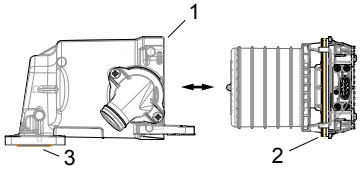

1. Housing
2. Motor
3. Mounting Flange

https://truckmanualshub.com/

How to Install a CCV Unit to the Engine

Installation instructions for servicable Crankcase Ventilation (CCV) modules.

Follow the steps below to install the CCV.

1. Install the CCV module on the engine. Tighten and torque the six bolts using a torque wrench to 16.2 +/- 1.5 lb-ft (22.0 +/- 2.0 N·m).
2. Attach electrical connector and inlet/outlet hoses.

Fuel Filter

Important information on replacing engine mounted cartridge type fuel filters.

Perform these maintenance procedures according to the Preventative Maintenance Schedule.

WARNING

When removing the fuel filter, a quantity of fuel will escape. Do not smoke or allow an open flame in close proximity. Failure to do so could ignite a fire or cause an explosion which could result in serious injury to you and/or bystanders. Failure to comply may result in death, personal injury, equipment or property damage.

NOTE

The fuel filter and the hand pump are located on the left-hand side of the engine, as viewed from the driver's seat.

NOTE

Use of poor quality fuel may require more frequent fuel filter element service.

Description

The fuel filter/water separator module provides fine-particle filtration, water separation, water-in fuel-sensing, automatic water draining, lifetime purification of drained water with a charcoal filter, 12V preheating and system manual priming in a singular easy to service module.

NOTE

The engine and fuel module should be operated in cold climates with acceptable cold climate fuel blends which noticeably reduces wax gelling in the fuel filter cartridge. The fuel module includes a 12V preheater to support preheat of the fuel for initial start-up in mild climates. Failure to operate with acceptable cold climate fuel may result in insufficient fuel flow to the fuel injection system.

Biodiesel

NOTE

If B6-B20 biodiesel fuel is used, the fuel filter must be changed every 25,000 mi (40,000 km).

Fuel Filter Removal

Procedure for removing the PACCAR MX-11 fuel filter.

Follow the steps below to remove the fuel filter:

Fuel Module

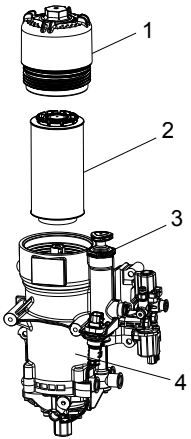

1. Fuel Filter Cap
2. Fuel Filter
3. Manual Priming Pump
4. Fuel Filter Housing

1. Clean the fuel filter cap and surrounding area to ensure dirt does not fall into the fuel module.

CAUTION

Dirt in the fuel system can lead to significant damage to the fuel system. Failure to comply may result in equipment or property damage.

2. Loosen the fuel tank cap to relieve any pressure in the fuel tank.
3. Remove the fuel filter cap by rotating it counter-clockwise with a wrench, automatic draining of fuel will be initiated, wait 5 minutes for complete fuel draining to prevent fuel from leaking or dripping on the starter motor.

NOTE

The fuel filter cartridge is a disposable filter and must not be cleaned and reused. Dispose of the filter as chemical waste.

4. Remove the fuel filter cartridge.

Fuel Filter Installation - PACCAR MX-11

Procedure for installing the PACCAR MX-11 fuel filter.

Follow the steps below to install a new fuel filter:

1. Verify the sealing O-ring that is supplied with the filter kit is installed on the fuel filter cap and lightly coat the O-ring with fuel.
2. Install the new fuel filter cartridge to the cap, then insert into the fuel module.

NOTE

Depending on the vehicle's fuel system configuration the fuel filter housing may not completely drain of fuel. If this is the case, take care when installing the new filter as this may cause fuel to spill from the filter housing.

3. Tighten the fuel filter cap by rotating it clockwise until the filter cap O-ring makes contact with the fuel module. Then tighten the filter

https://truckmanualshub.com/

cap to 30 lb-ft (40 N·m) as specified on the filter cap.

Fuel Filter Module - Priming Pump

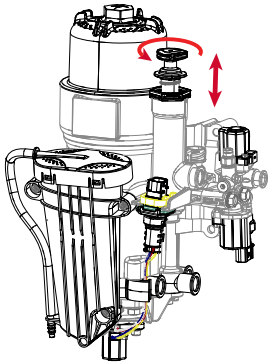

4. Replace the chassis-mounted fuel filter per the filter manufacturer's recommended procedure.

> **NOTE**
>
> If your vehicle is equipped with a PACCAR fuel blending valve, rotate the blending shut-off valve to the PRIME (closed) position before starting the priming procedure.

5. If vehicle is equipped with a fuel blending valve, rotate the valve to the RUN/open position.

> **NOTE**
>
> Allowing the engine to idle for several minutes with the fuel blending valve in the prime postition assists in purging air from the fuel system.

Starting After the Fuel Tank Has Run Dry or After Fuel System Service has been Performed

Procedure for starting the engine after running out of fuel.

Follow the steps below to restart the engine:

> **CAUTION**
>
> The following instructions should only be used in emergency situations when the fuel tank has run dry. Failure to follow the starting instructions below may damage the starter motor.

Fuel Filter Module - Priming Pump

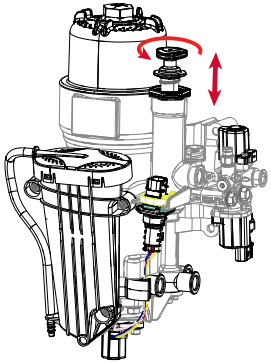

1. Loosen the fuel primer pump knob by rotating it counter-clockwise.
2. If equipped with a return fuel blending valve, turn the valve to the PRIME (closed) position.
3. Operate the priming pump by moving the knob in and out for 150 seconds. During this time the pumping resistance will increase, but the full time is required to fully prime the fuel system.

https://truckmanualshub.com/

CAUTION

Operate priming pump at a maximum rate of 30 strokes per minute to prevent damage to pump.

4. Check for leakage at the fuel filtercap. Tighten if necessary.

WARNING

Check the fuel filter for signs of leakage. Do not smoke or allow an open flame in close proximity. Failure to do so could ignite a fire or cause an explosion which could result in serious injury to you and/or bystanders. Failure to comply may result in death, personal injury, equipment or property damage.

5. Start the engine and allow it to idle for several minutes. Note that it could take up to 15 seconds of cranking for the engine to start. If the starter is engaged for longer than 20 seconds without starting, additional priming pump actuation may be necessary.

CAUTION

If the engine is cranked excessively Starter Protection will be triggered and starter engagement will be restricted for 10 minutes.

NOTE

Allowing the engine to idle for several minutes with the fuel blending valve in the prime postition assists in purging air from the fuel system.

6. Check the system for leakage while idling. Then turn the engine off and check the system again for leakage.
7. If the engine does not start within this time, repeat steps two and three until the engine starts. If the engine still does not start, allow the starter to cool down for at least 5 minutes before repeating the procedure.

Fuel Blending Valve

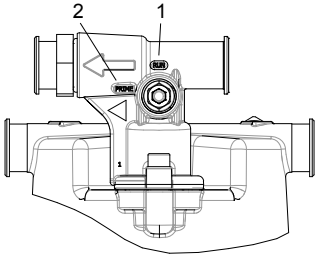

Valve Position
1. Run
2. Prime

8. If equipped with a return fuel blending valve, turn the bypass to the RUN position.

NOTE

Failure to return the bypass to the RUN position will prevent fuel recirculation and heating.

https://truckmanualshub.com/

WARNING

DO NOT loosen any fuel line fittings in order to bleed the fuel system of air. The system is under high pressure which, when relieved, could cause death, personal injury, equipment or property damage.

Cooling System

Important information on replacing coolant filters.

Your engine may be equipped with a coolant filter designed to capture and remove harmful deposits from the cooling system to help prolong system life. Refer to the Preventative Maintenance Schedule for the recommended coolant filter change service interval.

WARNING

Do not remove the surge tank fill cap on a hot engine. It can cause scalding coolant to spray out and you could be burned. If the engine has been operated within the last 30 minutes, be very careful in removing the radiator cap. Protect face, hands, and arms against escaping fluid and steam by covering the cap with a large, thick rag. Failure to comply may result in death, personal injury, equipment or property damage

WARNING

Handle coolant and antifreeze carefully. Ethylene glycol antifreeze is poisonous. Store in original fluid container only, and always keep out of the reach of children. Never remove the filler cap (vertically mounted) on the surge tank while the engine is still hot. Wait until the coolant temperature is below 120°F (50°C). Scalding steam and fluid under pressure may escape and cause serious personal injuries. The pressure cap (horizontally mounted) on the surge tank should never be opened. Failure to comply may result in death, personal injury, equipment or property damage.

Coolant/Antifreeze Condition

Maintenance checks for ensuring proper coolant\anti-freeze condition.

Perform these maintenance procedures according to the Preventative Maintenance Schedule.

NOTE

Test the engine coolant at least twice per year to determine if the coolant must be replaced. If it is determined that the coolant should be replaced, make sure to flush the coolant system. Contact a PACCAR authorized repair location for flushing the coolant system.

1. Check the following anti-freeze conditions:
   - Freeze point
   - Coolant level
   - pH level
   - Nitrite level
   - Carboxylate level

Checking Coolant Condition

Recommended coolant checks.

To ensure the Extended Life Coolant (ELC) in your vehicle always provides maximum protection, perform the following tests:

1. Check the coolant color at every maintenance interval. It should have no cloudiness, floating debris, or oils.
2. Test the freeze point at least twice a year. A refractometer or test strips can be used to measure the protection level.
3. Determine the pH and chemical inhibitor concentration level by using an ELC-specific test kit or test strips.
4. Keep the cooling system full by topping-up using ELC pre-diluted to a 50/50 blend, unless a different ratio of water/antifreeze has been substituted (depending on operating conditions).

> **NOTE**
>
> Inhibitor concentration level determines corrosion protection. If you are concerned about possible coolant quality, contamination, or mechanical problems, submit a coolant sample to your dealer for analysis. Improper maintenance may cause coolant degradation and could result in damage to the cooling system and engine components. Consult your dealer or the coolant manufacturer's representative for recommended extended life coolant test kits, test strips, and laboratory sample procedures.

Radiator Hoses

Maintenance checks for radiator hoses.

Perform these maintenance procedures according to the Preventative Maintenance Schedule.

1. Check the following radiator hose conditions:
   - Hose condition, deterioration/ signs of leaking.
   - Hose clamp torque.

Replace Coolant Filter

Procedure for removing coolant filter.

Perform these maintenance procedures according to the Preventative Maintenance Schedule.

Coolant Shutoff Valve

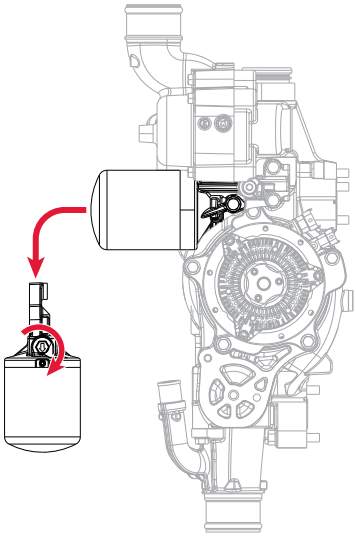

1. Slowly loosen the radiator cap to relieve any pressure in the cooling system.
2. Close the coolant filter shutoff valve by rotating the hex key clockwise and away from the “O” position.

https://truckmanualshub.com/

3. Clean the coolant filter and surrounding area.
4. A small amount of coolant could leak out when the filter is loosened. Use a suitable container to catch any coolant.
5. Remove the coolant filter by rotating it counter-clockwise. Use a filter wrench to remove.

> **NOTE**
>
> The coolant filter cartridge is a disposable filter and may not be cleaned and reused. Dispose of the filter as chemical waste.

6. Remove the O-ring from the coolant filter housing, if it has not been removed already.

Coolant Filter Removal

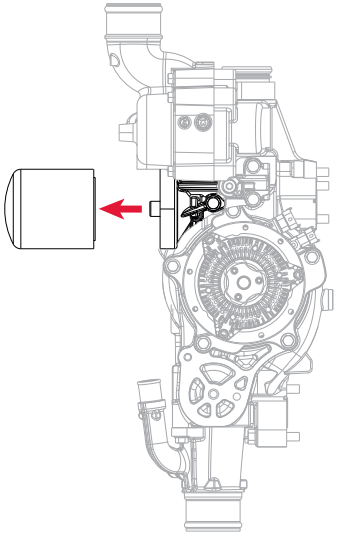

Coolant Filter Installation

Procedure for installing the coolant filter.

Follow the steps below to install the engine coolant filter:

1. Apply a small amount of coolant to the sealing ring of the new coolant filter.
2. Install the filter, rotating it clockwise until the sealing ring makes contact with the filter housing. Then tighten by hand ½ - ¾ of a turn.
3. Turn the shutoff valve to the OPEN position.
4. Reinstall the radiator fill cap.
5. Start the engine and run at idle speed for several minutes. Check for leaks.

Radiator Fill Procedure

Procedure for filling the radiator.

> **CAUTION**
>
> Follow the procedure below to fill coolant. Failure to follow this procedure and maintain proper coolant level can cause engine damage.

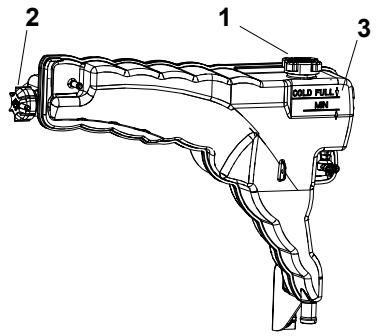

1. Fill cap (service point)
2. Pressure cap (never to be removed)
3. Fill line

1. Remove the surge tank fill cap (1). Do not remove the surge tank pressure cap (2).
2. Fill the system with premixed coolant through the surge tank fill neck.
3. Start the engine and idle at low RPM for 2 minutes.
4. Top-off surge tank to base of filler neck while idling, or ½ inch above the MIN line, if applicable.
5. Run engine at a higher idle until engine fan turns on and allow thermostat to open.
6. Reduce idle to low RPM and top off surge tank to ½ inch above the MIN line.
7. Run engine a higher idle for 10 minutes.
8. Reduce idle to low RPM and top off surge tank to ½ inch above the MIN line.
9. Allow engine to cool, then top off surge tank to the “COLD FULL” mark, the base of the filler neck, or the sight glass, if applicable.
10. Replace the surge tank fill cap.

NOTE

If the coolant frequently needs topping-up or there are any signs of coolant leakage, consult a PACCAR Service dealer.

https://truckmanualshub.com/

Drive Belts

Maintenance checks and procedures for engine drive belts.

Engine Belts

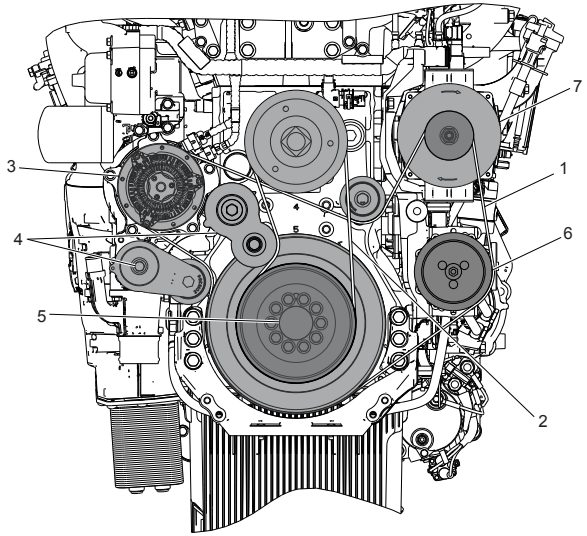

1. Accessory Belt
2. Fan Belt
3. Water Pump

4. Tensioners
5. Engine Dampener
6. A/C Compressor
7. Alternator

> **NOTE**
>
> Always fit the same type of belts as the ones replaced.

Engine Belt Checks

Maintenance check for engine drive belts.

Perform these maintenance procedures according to the Preventative Maintenance Schedule.

1. Inspect the engine drive belts for the following conditions:
   - Condition, signs of wear/ deterioration.
   - Alignment.

Fan Belt Tensioner

Maintenance checks for fan belt tensioner.

Perform these maintenance procedures according to the Preventative Maintenance Schedule.

1. Check and correct fan belt tensioner.
   - Mounting bolt torque.
   - Tensioner maintains proper belt tension.

Engine Fan

General maintenance information and precautions about the engine fan.

> **WARNING**
>
> Do not work on or near the fan with the engine running. Anyone near the engine fan when it turns on could be injured. If it is set at MANUAL, the fan will turn on any time the ignition key switch is turned to the ON position. In AUTO, it could engage suddenly without warning. Before turning on the ignition or switching from AUTO to MANUAL, be sure no workers are near the fan. Failure to comply may result in death or personal injury.

Your truck may be equipped with an On/Off or Viscous Fan Drive. Follow these guidelines to check your engine fan:

- Check the fan bearings for fan hub bearing looseness, loss of lubricant and any abnormal conditions. (For example, fan belt misaligned or excessive wear/damage.) Before starting the engine and with the engine off, look and feel for looseness in the fan hub.
- With the engine idling and the hood open, stand at the front of the vehicle. Listen for any noises coming from the fan hub. Bearings that have lost lubricant, and are dry, will typically emit a squeal or a growl when the engine is at operating temperature and the fan clutch is engaged. If noise is detected, have the fan bearings inspected by an authorized dealership.

https://truckmanualshub.com/

Engine Fan Blade

Verify that there is enough fan blade clearance with the fan shroud. Around the fan shroud, the recommended distance is 1 in. (25 mm) from front edge of any fan blade-to-radiator side member. Minimum clearance is 3/4 in. (19 mm).

- Rear edge of any blade must be no closer than 3/8 in. (9 mm) to the nearest engine component. If this cannot be obtained, the fan spacer or fan is not correct.
- The leading edge of any fan blade must be 1 in. (25 mm) from the inside edge of the shroud.

Poly V-belt and Fan Drive Belt Removal

Engine belt replacement procedures for poly v-belt and fan drive belts.

Perform these maintenance procedures according to the Preventative Maintenance Schedule.

1. Disconnect the electrical ground wire from the battery.
2. Reach between the fan blades and remove the fan blade mounting bolts using a 9/16” socket to remove the mounting nuts.
3. Place a flex-bar with a 15 mm socket on the fastener securing the automatic belt tensioner's roller, as shown in the image.

Flex Bar on Tensioner - V-belt and Fan Drive Belt

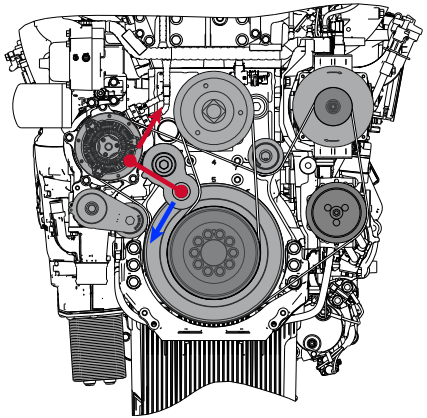

4. Rotate the flex-bar as shown in the diagram to relieve belt tension.
5. With the belt tensioner pressure relieved, remove the poly V-belt from the pulleys.
   - The tensioner can be temporarily blocked with a 0.16-0.2 inch (4-5 mm) thick pin (bore). This facilitates removal and installation of the poly V-belt.
6. After removing the belt, carefully allow the belt tensioner to spring back to the stop (if it had not been temporarily blocked).
7. Inspect the pulleys for damage, rust, and grease deposits. Clean or replace as necessary.

Poly V-belt and Fan Drive Belt Installation

Procedure to install poly v-belt and fan drive engine belts.

Follow the steps below to install the poly v-belt and fan drive belts:

1. Place the new poly V-belt over the pulleys, making certain the belt falls into all the belt pulley grooves.

> **NOTE**
>
> When installing the belts do not wrap belt around the tensioner until after the belt has been wrapped around all other pulleys and idlers.

2. After installing the belt, carefully allow the belt tensioner to spring

back to its normal position. If the tensioner had been temporarily blocked, relieve tensioner pressure enough to remove the locking pin, then allow the tensioner to spring back to its normal position.

> **NOTE**
>
> Do not reuse nylon patch lock nuts. Replace with new lock nuts when reinstalling parts.

3. Reinstall fan blade using fan blade bolts and new 9/16" nylon patch lock nuts.
4. Reconnect the electrical ground wire to the battery.

Poly V-belt, Alternator, Air-Conditioning Compressor Drive and Coolant Pump Drive Removal

Procedure to remove poly v-belt, alternator, air-conditioning compressor drive and coolant pump drive engine belts.

Follow the steps below to remove the poly v-belt, alternator, air-conditioning compressor drive and coolant pump drive belts:

1. Remove the poly V-belt from the fan and coolant pump drive as described in Poly V-belt and Fan Drive Belt Removal.

> **NOTE**
>
> Removing the fan blade is not necessary if only the accessory belt is removed. After removing the fan drive belt from its pulleys the accessory belt can be removed over the fan blade.

2. Next, place a flex-bar with a 15 mm socket on the alternator and air conditioning compressor drive belt tensioner roller fastener as shown. Move the bar in the direction shown to relieve pressure on the belt tensioner.

Flex Bar on Tensioner - Compressor and Coolant Pump Belt

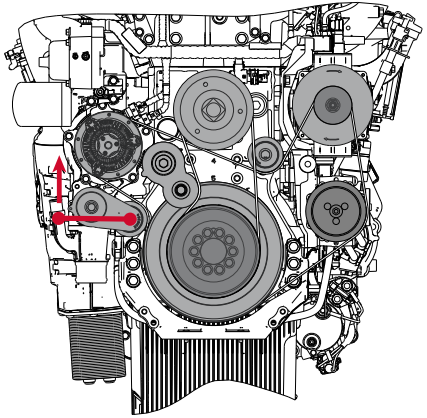

3. With the belt tensioner pressure relieved, remove the poly V-belt from the pulleys.
   - The tensioner can be temporarily blocked with a 0.16-0.2 inch (4-5 mm) thick pin (bore). This facilitates removal and installation of the poly V-belt.
4. After removing the belt, carefully allow the belt tensioner to spring

https://truckmanualshub.com/

back to the stop (if it had not been temporarily blocked).

5. Inspect the pulleys for damage, rust and grease deposits. Clean or replace as necessary.

Poly V-belt, Alternator, Air-Conditioning Compressor Drive and Coolant Pump Drive Install

Procedure to install poly v-belt, alternator, air-conditioning compressor drive and coolant pump drive engine belts.

Follow the steps below to install the poly v-belt, alternator, air-conditioning compressor drive and coolant pump drive belts:

1. Place the new poly V-belt over the pulleys, positioning the new belt so that it falls into all the belt pulley grooves.

> **NOTE**
>
> When installing the belts do not wrap belt around the tensioner until after the belt has been wrapped around all other pulleys and idlers.

2. After installing the belt, carefully allow the belt tensioner to spring back to its normal position. If the tensioner had been temporarily blocked, relieve tensioner pressure enough to remove the locking pin, then allow the tensioner to spring back to its normal position.
3. Reinstall the fan drive poly V-belt as previously described in *Poly V-belt and Fan Drive Belt Installation* on page 70.
4. Reconnect the electrical ground wire to the battery.

Aftertreatment System

Diesel Particulate Filter Service Strategy

Customers have two options when maintaining their Diesel Particulate Filter. Both strategies are shown on the maintenance schedule but only one strategy may be used. They are not interchangeable.

1. Dry Cleaning strategy - This strategy requires cleaning of ash at the stated interval. Once the unit is cleaned, it cannot be switched to the wet cleaning strategy interval. See *Diesel Particulate Filter (DPF) Dry Cleaning* on page 72 for the service procedure.
2. Wet Cleaning strategy - This strategy requires wet cleaning the unit at the stated interval. A wet cleaned unit from an authorized PACCAR dealer may either continue to use the wet cleaning strategy or switch to use the dry cleaning strategy.

Diesel Particulate Filter (DPF) Dry Cleaning

Maintenance tasks to clean the diesel particulate filter.

Perform this maintenance procedures according to the Preventative Maintenance Schedule.

> **NOTE**
>
> The aftertreatment DPF dry clean/wet clean interval is based on the use of lubricating oils that meet the SAE 10W30 API CK–4/CJ-4 oil specification.

> **NOTE**
>
> If you dry clean the DPF at the prescribed interval, the cleaning must follow that same interval. Do not switch the service strategy from dry cleaning to wet cleaning and vise versa. Switching service strategies may void warranty.

1. Dry clean using DPF cleaning machine according to the maintenance schedule.
2. Replace filter if necessary.

If a DPF is wet cleaned, then the maintenance intervals may be switched to stay on the dry cleaning strategy or start with a wet cleaning strategy. See *Diesel Particulate Filter Service Strategy* on page 72.

Diesel Particulate Filter (DPF) Wet Cleaning

DPF can be wet cleaned at a different interval than a dry cleaning, but do not mix the two intervals.

A new DPF unit may be wet cleaned instead of being dry cleaned. This interval only applies to new DPF units. It does not apply to a unit that has been dry cleaned. See *Diesel Particulate Filter Service Strategy* on page 72 and *Diesel Particulate Filter (DPF) Dry Cleaning* on page 72 for details before making a decision. Please contact your authorized dealer for clarifications.

Diesel Exhaust Fluid (DEF) Filter

Maintenance tasks for diesel exhaust fluid filter

Perform these maintenance procedures according to the Preventative Maintenance Schedule.

https://truckmanualshub.com/

Medium and Large DEF Tank

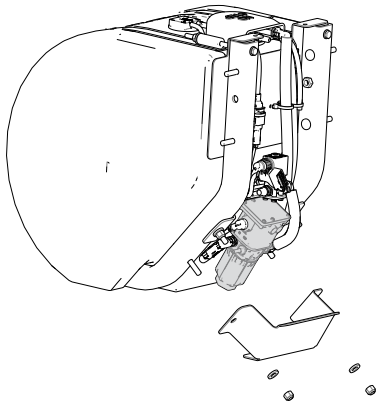

Small DEF Tank Filter Access

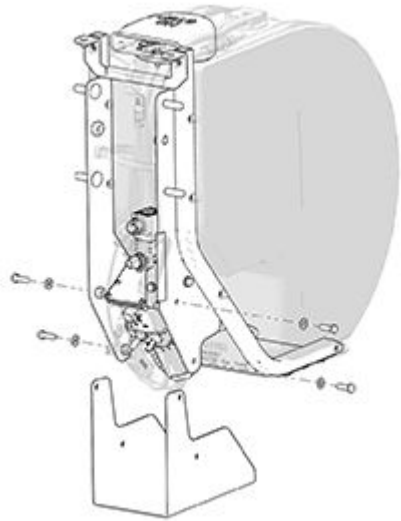

1. Replace the aftertreatment diesel exhaust fluid (DEF) dosing unit (DEF module) filter according to the maintenance schedule.
2. From the bottom of the tank, remove the cover plate by removing the various fasteners holding it on then allow the cover plate to drop down.

Air System

Air Intake System

General information and precautions on how to maintain the air intake system.

Engine heat, vibration, and age combine to loosen air intake connections and cause cracks in the tubing and elbows. Leaks in the intake system allow abrasive dust to enter the engine and quickly cause expensive damage. During your daily walk-around inspection, carefully check all tubing, elbows, clamps, supports and fasteners for condition and tightness. Check the Charge-Air-Cooler for air leaks annually. The air leaks can be caused by cracked tubes or header. For service see your authorized dealer.

CAUTION

Do not use air intake pipes and connections as a step or to pull yourself up. This could loosen the connections and open the system to unfiltered air which could damage the engine.

Air Compressor

Maintenance procedures for the air compressor.

Perform these maintenance procedures according to the Preventative Maintenance Schedule.

1. Check and correct for carbon buildup.

Air Cleaner

Proper maintenance procedures for the air cleaner.

Perform these maintenance procedures according to the Preventative Maintenance Schedule.

1. Check and correct for restriction:
   - Service filter element when air cleaner restriction gauge (option) locks in the extreme high position.
   - Check hose/pipe condition – deterioration/ signs of leaking.
   - Check hose clamp torque.

Charge Air Piping

Maintenance checks for charge\air piping.

Perform these maintenance procedures according to the Preventative Maintenance Schedule.

1. Check and correct the following air piping components:
   - Hose/pipe condition – deterioration/signs of leaking.
   - Hose clamps for tightness.
   - Clearance to other components.

Charge Air Cooler

Maintenance checks for the charge air cooler.

Perform these maintenance procedures according to the Preventative Maintenance Schedule.

1. Check and correct the following components of the air cooler:
   - Cracked tubes or header.
   - Clogged fins/tubes.
   - Hose/pipe condition – deterioration/signs of leaking.
   - Hose clamp torque.

Air Cleaners

General information about servicing air cleaners.

The following service information is basic to all air cleaner makes and models.

https://truckmanualshub.com/

WARNING

Do not use air cleaner components as grab handles. These components may break if you are using them to support your weight. Failure to comply may result in personal injury or damage to vehicle components.

WARNING

Do not push on the under hood air door with hands. This door is held closed with a spring which may shut close unexpectedly. Failure to comply may result in personal injury.

CAUTION

Failure to replace air filter at proper intervals may result in passage of dirt/debris into the engine or the “dusting” of an engine resulting in significant equipment damage.

Your vehicle is equipped with an air inlet restriction indicator. Service the filter elements when the air inlet restriction indicator locks in the extreme Up position. Paper elements require care and proper handling because they are critical to engine service life.
The engine air filter is located on the top of the engine just below the hood. There are (4) fasteners that hold the cover to the filter housing.
If the vehicle has the under hood air intake option, the air intake solenoid and the airline will need to be removed to access the air filter.

Replace Engine Air Filter

Maintenance information about servicing the engine air intake filter.

If the vehicle has under hood air intake option, remove the air solenoid first.

Engine Air Intake Filter Module

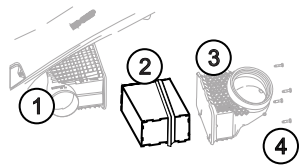

1.	Main enclosure
2.	Air filter
3.	Housing
4.	Screws

1. Park the vehicle. Set the parking brake and turn the ignition OFF.
2. If air intake is located under the hood, open hood.
3. Loosen the (4) screws, with a 10 mm wrench, that hold the housing to the main filter enclosure. (These screws will not come out of the housing.)
4. Pull the air filter housing away from the main enclosure to access the filter.
5. The filter can be removed by gently pulling directly out of the main enclosure. Be careful not to drop or tap the filter on the housing during removal as this could loosen dirt and dust trapped in the filter. DO NOT clean and reuse the original filter.
6. Inspect the sealing surface and clean out any debris from the air filter housing and enclosure before installing a new filter. Be careful to

not push any contaminant into the engine inlet.

7. Visually inspect the new filter and the filter housing for damage, especially the sealing surfaces and filter media.
8. Install the filter housing. DO NOT use the housing to drive the filter into position. Tighten screws to 30 ± 5 lb-in (3.4 ± 0.56 N·m).
9. Start the engine and allow the air system to reach operating pressure. Activate the under hood air switch and verify that there are no air leaks.

Air Filter Restriction Indicator

General information about the engine air filter restriction indicator.

An Air Filter Restriction Indicator is installed on the air cleaner or air induction piping so it has access to clean filtered air. As the filter plugs and restriction increases, a red indicator will appear in a window on the indicator. When red appears, the air filter should be replaced. The indicator can be reset by pressing the button at the end of the indicator.

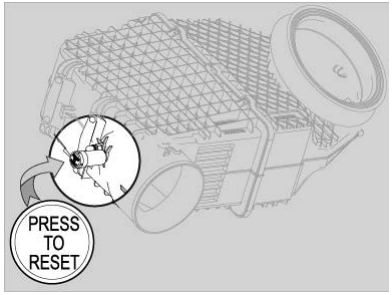

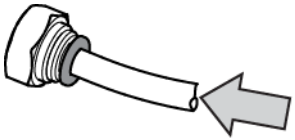

PUSH
(EMPUJAR; POUSSER)

Turbocharger

General information about maintaining the turbocharger.

WARNING

Do not operate engine with turbocharger intake piping disconnected. A suction is created when the engine is running. This suction could draw your hand or anything else near it into the impeller fan. You could be injured. Always keep the intake piping connected when you will be running the engine.

When servicing the air intake and exhaust systems on a turbocharged engine, check the items listed below:

Lubricating System

Check the oil lines, housing, and connections. Look for leaks, damage, or deterioration. Leaks could mean you have damaged oil lines or oil seals.

Manifold

With the engine operating, check for leaking manifold or flange gaskets.

High Frequency Vibration

Vibration may indicate turbo rotor imbalance. Have your dealer investigate this immediately. If you detect any deficiencies, take the vehicle to an authorized dealer for servicing. Delay could lead to severe and expensive damage to your vehicle.

https://truckmanualshub.com/

Exhaust System

General information on maintaining the exhaust system.

The exhaust system is part of the noise and emission control system. Periodically check the exhaust system for wear, exhaust leaks, and loose or missing parts. For details on how to maintain the emisssions components in the exhaust system, see "Noise and Emission Control" in your vehicle operator's manual. Please refer to the Engine Operator's Manual for more details on how to maintain the emission's components in the exhaust system.

Charging - Cranking System

Electrical Harness / Cables

Maintenance checks for the electrical harnesses and cables.

Perform these maintenance procedures according to the Preventative Maintenance Schedule.

1. Check the following electrical components:
   - Inspect for loose connections, corrosion, chafing, and broken retention clips.

Batteries, Cables, and Connections

Maintenance checks for electrical components.

Perform these maintenance procedures according to the Preventative Maintenance Schedule.

1. Check the following electrical components:
   - Condition – electrolyte level, cracks, signs of leaking, overcharging.
   - Hold–downs – tightness.
   - Battery box mounting bolt – torque.

Crankshaft - Vibration Damper

Maintenance checks for the engine crankshaft.

Perform these maintenance procedures according to the Preventative Maintenance Schedule.

1. If equipped with a rubber type crankshaft damper, perform the following checks of vibration damper.
   - Inspect for cracks, nicks, leakage.
   - Check fastener torque.

Engine Mounting Bolts

Maintenance guidelines for engine mounting bolts.

Perform these maintenance procedures according to the Preventative Maintenance Schedule. Check for the following:

1. Inspect both mount and leg fasteners. Check for loose or broken bolts. Replace as necessary.
2. Check mount and leg for fractures, breaks or deformation. Replace as necessary.
3. Check for complete insertion of motor mount. Replace as necessary.

CAUTION

Do not re-torque or reuse existing flange head bolts. These bolts are factory set to the specified torque. If bolts are loose or damaged, they must be replaced with the new bolts. Failure to comply may result in equipment or property damage.

Engine Valves

Procedures and maintenance intervals for initial service and routine maintenance of valves.

Perform these valve clearance maintenance procedures according to the following intervals.

Engine Valve Adjust Intervals

	Vehicle Application	Interval
Valve Adjust Interval	Normal Duty (Line Haul) - less than 20% idle time	Initial adjust at 150,000 miles (240,000 km, 6,750 hours), at 450,000 miles (725,000 km, 13,500 hours), then every 300,000 miles (480,000km) thereafter
	Normal Duty (Line Haul) - more than 20% idle time	
	Severe Duty (Vocational*)	Initial adjust at 60,000 miles (96,000 km, 1,600 hours), at 360,000 miles (576,000 km, 9.600 hours), then every 300,000 miles (480,000km) thereafter
* Vocational vehicle applications include: Agriculture, Concrete Mixers, Construction, Crane, Dumps, Emergency/Fire, Heavy Equipment, Loggers, Mining, Oil Field, Refuse, Pick-up & Delivery, Snowplows, and Wrecker.		

1. Inspect and adjust valve clearance at intial servicing and at scheduled maintenance (if necessary).
2. Reset valve lash, if needed, to nominal specifications. See *Engine Specifications* on page 37.
3. Replace valve cover gasket seal at intial servicing and at scheduled maintenance.

 https://truckmanualshub.com/

Engine Identification

Component Locations

Identification of major engine components.

Engine - Right Side

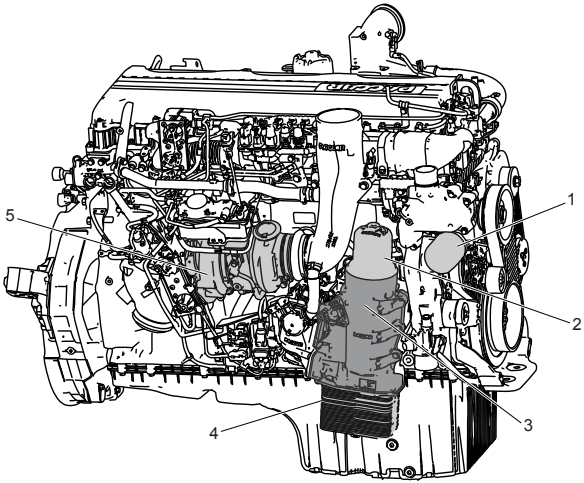

1. Coolant Filter
2. Centrifugal Bypass Oil Filter

3. Full-flow Oil Filter
4. Oil Cooler
5. Torbcharger

Engine - Left Side

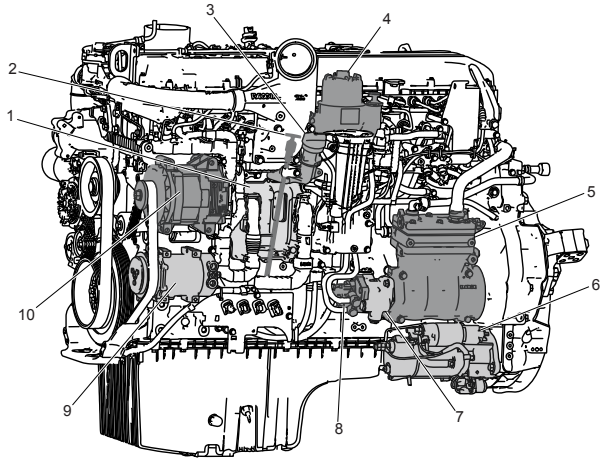

1. Electronic Control Module (ECM)
2. Dipstick
3. Oil Fill

 https://truckmanualshub.com/

4. Fuel Filter
5. Air Compressor
6. Starter
7. Power Steering Pump
8. Low Pressure Fuel Pump
9. A/C Compressor
10. Alternator

EPA Label

EPA label location and label information.

The EPA label provides important facts about the engine. This label is located on top of the engine valve cover or on the mixer manifold. The engine EPA label must not be changed unless approved by PACCAR.

EPA Label Location

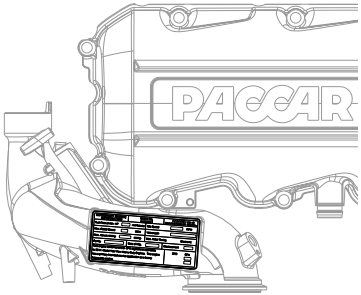

The EPA label provides many details regarding the engine. Some facts that are found on the EPA label include the following:

- Fuel rate
- Idle speed
- Maximum rated speed
- Valve lash
- Maximum power rating
- Date of manufacture
- Engine Displacement

EPA Label

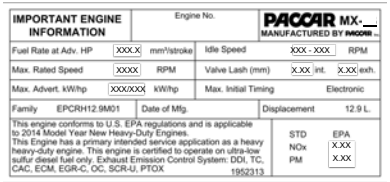

IMPORTANT ENGINE INFORMATION	Engine No.	PACCAR MX-__ MANUFACTURED BY PACCAR	
Fuel Rate at Adv. HP	XXX.X mm³/stroke	Idle Speed	XXX - XXX RPM
Max. Rated Speed	XXXX RPM	Valve Lash (mm)	X.XX int. X.XX exh.
Max. Advert. kW/hp	XXX/XXX kW/hp	Max. Initial Timing	Electronic
Family EPCRH12.9M01	Date of Mfg.	Displacement	12.9 L.

This engine conforms to U.S. EPA regulations and is applicable to 2014 Model Year New Heavy-Duty Engines.
This Engine has a primary intended service application as a heavy heavy-duty engine. This engine is certified to operate on ultra-low sulfur diesel fuel only. Exhaust Emission Control System: DDI, TC, CAC, ECM, EGR-C, OC, SCR-U, PTOX 1952313

STD	EPA
NOx	X.XX
PM	X.XX

https://truckmanualshub.com/

Chapter 3 | ENGINE WARRANTY

In this Chapter:

United States and Canada Engine Warranty..... 85

https://truckmanualshub.com/

United States and Canada Engine Warranty

Engine Warranty for Standard Applications

PACCAR MX-11 engine coverage for standard applications .

Products Warranted

This warranty applies to new PACCAR MX-11 engines sold and used in the United States[4] or Canada and operated in on-highway applications with one exception – there is different warranty coverage for engines used in the fire apparatus truck applications.
The PACCAR MX-11 engine is warranted directly to the first purchaser or first lessee by PACCAR.

Base Engine Warranty

This warranty covers any failures of the engine which result, under normal use and service, from a defect in material or factory workmanship (warrantable failure). This coverage begins on the date of delivery and ends two years or 250,000 miles (400,000 kilometers) or 6,250 hours, whichever occurs first, after the date of delivery of the engine to the first purchaser or first lessee.
Additional coverage is outlined in *Emissions Warranty* on page 90.

Major Engine Components Warranty

Warranty coverage for major engine components.

There is an Engine Warranty period of 60 months, 500,000 miles (800,000 kilometers) or 12,500 hours, whichever occurs first, after the date of delivery of the engine to the first purchaser or first lessee for the following engine parts:

- Cam Follower Assemblies
- Camshaft
- Camshaft Gear
- Camshaft Idler Gear
- Connecting Rod Assemblies
- Crankshaft
- Crankshaft Gear
- Cylinder Block Casting
- Cylinder Head Bolts
- Cylinder Head Casting
- Flywheel Housing
- Lube Pump Gear
- Main Bearing Bolts
- Thermostat Housing
- Water Pump Housing

PACCAR and Owner Responsibilites

Description of responsibilites for PACCAR and the owner of a PACCAR Brand Engine.

PACCAR Responsibilities

PACCAR will pay for all parts and labor needed to repair the damage to the engine resulting from a warrantable failure.
PACCAR will pay for the lubricating oil, antifreeze, filter elements, belts, hoses, and other maintenance items that are not reusable due to the warrantable failure.
PACCAR will pay for reasonable labor costs for engine removal and reinstallation when necessary to repair a warrantable failure.

[4] United States includes American Samoa, the Commonwealth of Northern Mariana Islands, Guam, Puerto Rico, and the U.S. Virgin Islands.

https://truckmanualshub.com/

PACCAR will pay during the base engine warranty period of two years or 250,000 miles (400,000 kilometers) or 6,250 hours, whichever occurs first: reasonable costs for towing a vehicle disabled by a warrantable failure to the nearest authorized repair location. In lieu of the towing expense and in its sole discretion, PACCAR may pay reasonable costs for a mechanic to travel to and from the location of the vehicle when an engine repair is performed at the site of the failure.

Owner Responsibilities

The owner is responsible for the operation and maintenance of the engine as specified in the applicable PACCAR Operator's Manual. The owner is also responsible for providing proof that all recommended maintenance has been performed.

Before the expiration of the applicable warranty, the owner must notify a PACCAR authorized engine dealer of any warrantable failure and make the engine available for repair by such facility. The warrantable failure must be brought to the attention of a PACCAR authorized engine dealer within 30 days of discovery. Except for engines disabled by a warrantable failure, owner must also deliver the engine to the repair facility.

The owner is responsible for the cost of lubricating oil, antifreeze, filter elements and other maintenance items provided during warranty repairs unless such items are not reusable due to the warrantable failure. The owner is responsible for communication expenses, meals, lodging and similar costs incurred as a result of a warrantable failure.

The owner is responsible for non-engine repairs and for "downtime" expenses, cargo damage, fines, all applicable taxes, all business costs and other losses resulting from a warrantable failure.

The owner is responsible for non-engine repairs and for "downtime" expenses, cargo damage, fines, all applicable taxes, all business costs and other losses resulting from a warrantable failure.

Warranty Limitations - Standard Applications

Limitations of engine warranty for standard applications.

Your sole and exclusive remedy against PACCAR and the selling dealer arising from your purchase and use of this engine is limited to the repair or replacement of "warrantable failures" at authorized United States and Canadian PACCAR engine dealers , or an authorized PACCAR engine facility where applicable, subject to PACCAR's time, mileage, and hour limitations of the engine warranty. The maximum time, mileage and hour limitations of the engine warranty begin running on the date of delivery to the first purchaser or first lessee. The accrued time, mileage, or hours is calculated when the engine is brought into an authorized dealer for correction of warrantable failures.

Failures, other than those resulting from defects in material or factory workmanship, are not covered by this warranty. PACCAR is not responsible for failures or damage resulting from what PACCAR determines to be abuse or neglect, including, but not limited to: damage due to accident; operation without adequate coolants or lubricants; overfueling; overspeeding; lack of maintenance of lubricating, cooling or intake systems; improper storage, starting, warm-up, run-in or shutdown practices; failure to perform regeneration in a timely manner; unauthorized modifications of the engine. PACCAR is also not responsible for failures caused by incorrect oil or fuel or diesel exhaust fluid or by water, dirt or other contaminants in the fuel, oil, or diesel

https://truckmanualshub.com/

exhaust fluid. Failure of replacement parts used in repairs due to the above non-warrantable conditions is not warrantable.
This warranty does not apply to accessories supplied by the vehicle original equipment manufacturer (OEM) which are covered by the OEM vehicle warranty.
Failures resulting in excessive oil consumption are covered for the duration of the coverage or 250,000 miles (400,000 kilometers) or 6,250 hours from the date of delivery of the engine to the first purchaser or first lessee, whichever occurs first.
Before a claim for excessive oil consumption will be considered, the owner must submit adequate documentation to show that consumption exceeds PACCAR published standards.
Failures of belts and hoses supplied by PACCAR are covered for the first year from the date of delivery of the engine to the first purchaser or first lessee.
Parts used to repair a warrantable failure may be new parts, approved rebuilt parts, or repaired parts. PACCAR is not responsible for failures resulting from the use of parts not approved by PACCAR. A new approved or rebuilt part used to repair a warrantable failure assumes the identity of the part it replaced and is entitled to the remaining coverage hereunder.
PACCAR is not responsible for damage or loss resulting from engine horsepower/torque upgrades.
PACCAR reserves the right to interrogate electronic control module (ECM) data for purposes of failure analysis.
PACCAR does not warrant antifreeze, lubricants, filters, filter elements, or any other part which is considered a maintenance item. PACCAR does not warrant services to remove ash from the DPF either at or before a regular service interval as indicated in the maintenance schedule or when the system indicates that the DPF requires cleaning unless the service is required as part of a warrantable repair.
PACCAR DOES NOT COVER WEAR OR WEAROUT OF COVERED PARTS.
THIS WARRANTY AND THE EMISSION WARRANTY SET FORTH HEREINAFTER ARE THE SOLE WARRANTIES MADE BY PACCAR IN REGARD TO THESE ENGINES.
THIS LIMITED WARRANTY IS THE SOLE WARRANTY MADE BY PACCAR AND THE SELLING DEALER. EXCEPT FOR THE ABOVE LIMITED WARRANTY, PACCAR AND THE SELLING DEALER MAKE NO OTHER WARRANTIES, EXPRESS OR IMPLIED. PACCAR AND THE SELLING DEALER EXPRESSLY DISCLAIM ANY WARRANTY OF MERCHANTABILITY OR WARRANTY OF FITNESS FOR A PARTICULAR PURPOSE.
PACCAR AND THE SELLING DEALER SHALL NOT BE LIABLE FOR INCIDENTAL OR CONSEQUENTIAL DAMAGES INCLUDING, BUT NOT LIMITED TO: LOSS OF INCOME OR LOST PROFITS; ENGINE OR VEHICLE DOWNTIME; THIRD PARTY DAMAGE, INCLUDING DAMAGE OR LOSS TO OTHER ENGINES, VEHICLES OR PROPERTY, ATTACHMENTS, TRAILERS AND CARGO; LOSS OR DAMAGE TO PERSONAL CONTENTS; COMMUNICATION EXPENSES; LODGING AND/OR MEAL EXPENSES; FINES; APPLICABLE TAXES OR BUSINESS COSTS OR LOSSES; ATTORNEYS' FEES; AND ANY LIABILITY YOU MAY HAVE IN RESPECT TO ANY OTHER PERSON OR ENTITY.
This warranty gives you specific legal rights, and you may also have other rights which vary from state to state.

https://truckmanualshub.com/

Engine Warranty for Fire Apparatus Truck Applications

PACCAR MX-11 engine coverage for fire apparatus truck applications.

This warranty applies to new PACCAR MX-11 engines sold and used in the United States[5] or Canada and operated in fire apparatus truck applications.
The PACCAR MX-11 engine is warranted directly to the first purchaser or first lessee by PACCAR.

Base Engine Warranty

The base engine warranty covers any failures of the engine which result, under normal use and service, from a defect in material or factory workmanship (warrantable failure). This coverage begins on the date of delivery to the first purchaser or first lessee and ends after five years or 100,000 miles (160,000 kilometers), whichever occurs first.

PACCAR and Owner Responsibilites

Description of responsibilites for PACCAR and the Fire Truck owner.

PACCAR Responsibilities

PACCAR will pay for all parts and labor needed to repair the damage to the engine resulting from a warrantable failure.
PACCAR will pay for the lubricating oil, antifreeze, filter elements, belts, hoses, and other maintenance items that are not reusable due to the warrantable failure.
PACCAR will pay for reasonable labor costs for engine removal and reinstallation when necessary to repair a warrantable failure.
PACCAR will pay during the base engine warranty period of two years or 100,000 miles (160,000 kilometers), whichever occurs first: reasonable costs for towing a vehicle disabled by a warrantable failure to the nearest authorized repair location. In lieu of the towing expense and in its sole discretion, PACCAR may pay reasonable costs for a mechanic to travel to and from the location of the vehicle when an engine repair is performed at the site of the failure.

Owner Responsibilities

The owner is responsible for the operation and maintenance of the engine as specified in the applicable PACCAR Operator's Manual. The owner is also responsible for providing proof that all recommended maintenance has been performed.
Before the expiration of the applicable warranty, the owner must notify a PACCAR authorized engine dealer of any warrantable failure and make the engine available for repair by such facility. The warrantable failure must be brought to the attention of a PACCAR authorized engine dealer within 30 days of discovery. Except for engines disabled by a warrantable failure, owner must also deliver the engine to the repair facility.
The owner is responsible for the cost of lubricating oil, antifreeze, filter elements and other maintenance items provided during warranty repairs unless such items are not reusable due to the warrantable failure. The owner is responsible for communication expenses, meals, lodging and similar costs incurred as a result of a warrantable failure.
The owner is responsible for non-engine repairs and for "downtime" expenses, cargo damage, fines, all applicable taxes,

[5] United States includes American Samoa, the Commonwealth of Northern Mariana Islands, Guam, Puerto Rico, and the U.S. Virgin Islands.

https://truckmanualshub.com/

all business costs and other losses resulting from a warrantable failure.
The owner is responsible for a $100 (U.S. Dollars) deductible per each service visit under this plan in the 3rd, 4th, and 5th years of base engine warranty. The deductible will not be charged during the first two years of the base engine warranty.

Warranty Limitations - Fire Truck

Limitations of engine warranty for fire truck applications.

Your sole and exclusive remedy against PACCAR and the selling dealer arising from your purchase and use of this engine is limited to the repair or replacement of “warrantable failures” at authorized United States and Canadian PACCAR engine dealers , or an authorized PACCAR engine facility where applicable, subject to PACCAR’s time, mileage, and hour limitations of the engine warranty. The maximum time, mileage and hour limitations of the engine warranty begin running on the date of delivery to the first purchaser or first lessee. The accrued time, mileage, or hours is calculated when the engine is brought into an authorized dealer for correction of warrantable failures.

Failures, other than those resulting from defects in material or factory workmanship, are not covered by this warranty. PACCAR is not responsible for failures or damage resulting from what PACCAR determines to be abuse or neglect, including, but not limited to: damage due to accident; operation without adequate coolants or lubricants; overfueling; overspeeding; lack of maintenance of lubricating, cooling or intake systems; improper storage, starting, warm-up, run-in or shutdown practices; failure to perform regeneration in a timely manner; unauthorized modifications of the engine. PACCAR is also not responsible for failures caused by incorrect oil or fuel or diesel exhaust fluid or by water, dirt or other contaminants in the fuel, oil, or diesel exhaust fluid. Failure of replacement parts used in repairs due to the above non-warrantable conditions is not warrantable.
This warranty does not apply to accessories supplied by the vehicle original equipment manufacturer (OEM) which are covered by the OEM vehicle warranty.
Failures resulting in excessive oil consumption are covered for the duration of the coverage or 100,000 miles (160,000 kilometers) from the date of delivery of the engine to the first purchaser or first lessee, whichever occurs first. Before a claim for excessive oil consumption will be considered, the owner must submit adequate documentation to show that consumption exceeds PACCAR published standards.
Failures of belts and hoses supplied by PACCAR are covered for the first year from the date of delivery of the engine to the first purchaser or first lessee.
Parts used to repair a warrantable failure may be new parts, approved rebuilt parts, or repaired parts. PACCAR is not responsible for failures resulting from the use of parts not approved by PACCAR. A new approved or rebuilt part used to repair a warrantable failure assumes the identity of the part it replaced and is entitled to the remaining coverage hereunder.
PACCAR is not responsible for damage or loss resulting from engine horsepower/ torque upgrades.
PACCAR reserves the right to interrogate electronic control module (ECM) data for purposes of failure analysis.
PACCAR does not warrant antifreeze, lubricants, filters, filter elements, or any other part which is considered a maintenance item. PACCAR does not warrant services to remove ash from the DPF either at or before a regular service interval as indicated in the maintenance

https://truckmanualshub.com/

schedule or when the system indicates that the DPF requires cleaning unless the service is required as part of a warrantable repair.

PACCAR DOES NOT COVER WEAR OR WEAROUT OF COVERED PARTS.

THIS WARRANTY AND THE EMISSION WARRANTY SET FORTH HEREINAFTER ARE THE SOLE WARRANTIES MADE BY PACCAR IN REGARD TO THESE ENGINES.

THIS LIMITED WARRANTY IS THE SOLE WARRANTY MADE BY PACCAR AND THE SELLING DEALER. EXCEPT FOR THE ABOVE LIMITED WARRANTY, PACCAR AND THE SELLING DEALER MAKE NO OTHER WARRANTIES, EXPRESS OR IMPLIED. PACCAR AND THE SELLING DEALER EXPRESSLY DISCLAIM ANY WARRANTY OF MERCHANTABILITY OR WARRANTY OF FITNESS FOR A PARTICULAR PURPOSE.

PACCAR AND THE SELLING DEALER SHALL NOT BE LIABLE FOR INCIDENTAL OR CONSEQUENTIAL DAMAGES INCLUDING, BUT NOT LIMITED TO: LOSS OF INCOME OR LOST PROFITS; ENGINE OR VEHICLE DOWNTIME; THIRD PARTY DAMAGE, INCLUDING DAMAGE OR LOSS TO OTHER ENGINES, VEHICLES OR PROPERTY, ATTACHMENTS, TRAILERS AND CARGO; LOSS OR DAMAGE TO PERSONAL CONTENTS; COMMUNICATION EXPENSES; LODGING AND/OR MEAL EXPENSES; FINES; APPLICABLE TAXES OR BUSINESS COSTS OR LOSSES; ATTORNEYS' FEES; AND ANY LIABILITY YOU MAY HAVE IN RESPECT TO ANY OTHER PERSON OR ENTITY.

This warranty gives you specific legal rights, and you may also have other rights which vary from state to state.

Emissions Warranty

Emissions coverage for all applications in the United States.

This emission warranty applies to new PACCAR engines marketed by PACCAR that are used in the United States[6] in vehicles designed for transporting persons or property on a street or highway.

Coverage

PACCAR warrants to the first purchaser or first lessee and each subsequent purchaser that the engine is designed, built and equipped so as to conform at the time of sale by PACCAR with all U.S. Federal emission regulations applicable at the time of manufacture and that it is free from defects in material or factory workmanship which would cause it not to meet these regulations within the longer of the following periods: (A) Five years or 100,000 miles (160,935 kilometers) of operation, whichever occurs first, as measured from the date of delivery of the engine to the first purchaser or first lessee or (B) The base engine warranty.

If the vehicle in which the engine is installed is registered in the state of California, a separate *California Emissions Control Warranty Statement* on page 92 also applies. See California Emissions Warranty.

Replacement Parts

PACCAR recommends that any service parts used for maintenance, repair or

[6] United States includes American Samoa, the Commonwealth of Northern Mariana Islands, Guam, Puerto Rico, and the U.S. Virgin Islands.

https://truckmanualshub.com/

replacement of emission control systems be new or genuine approved rebuilt parts and assemblies, and that the engine be serviced by an authorized PACCAR engine dealer. Your vehicle contains air, fuel, and electrical components that may affect engine emission controls. The use of non-genuine engine or vehicle replacement parts that are not equivalent to the PACCAR engine or OEM vehicle manufacturer's original part may impair the engine and vehicle emissions control system from working or functioning effectively, and may jeopardize your emissions warranty coverage.

Warranty Limitations - Emissions

Limitations of engine emissions warranty.

Your sole and exclusive remedy against PACCAR and the selling dealer arising from your purchase and use of this engine is limited to the repair or replacement of "warrantable failures" at authorized United States and Canadian PACCAR engine dealers , or an authorized PACCAR engine facility where applicable, subject to PACCAR's time, mileage, and hour limitations of the engine warranty. The maximum time, mileage and hour limitations of the engine warranty begin running on the date of delivery to the first purchaser or first lessee. The accrued time, mileage, or hours is calculated when the engine is brought into an authorized dealer for correction of warrantable failures.

Failures, other than those resulting from defects in material or factory workmanship, are not covered by this warranty. PACCAR is not responsible for failures or damage resulting from what PACCAR determines to be abuse or neglect, including, but not limited to: damage due to accident; operation without adequate coolants or lubricants; overfueling; overspeeding; lack of maintenance of lubricating, cooling or intake systems; improper storage, starting, warm-up, run-in or shutdown practices; failure to perform regeneration in a timely manner; unauthorized modifications of the engine. PACCAR is also not responsible for failures caused by incorrect oil or fuel or diesel exhaust fluid or by water, dirt or other contaminants in the fuel, oil, or diesel exhaust fluid. Failure of replacement parts used in repairs due to the above non-warrantable conditions is not warrantable. PACCAR is not responsible for non-engine repairs, downtime expenses, cargo damage, fines, all applicable taxes, all business costs or other losses resulting from a warrantable failure.

PACCAR does not warrant antifreeze, lubricants, filters, filter elements, or any other part which is considered a maintenance item. PACCAR does not warrant services to remove ash from the DPF either at or before a regular service interval as indicated in the maintenance schedule or when the system indicates that the DPF requires cleaning unless the service is required as part of a warrantable repair.

THIS LIMITED EMISSION WARRANTY IS THE SOLE WARRANTY MADE BY PACCAR RELATING TO THE EMISSION EQUIPMENT. EXCEPT FOR THE ABOVE LIMITED WARRANTY, PACCAR MAKES NO OTHER WARRANTIES, EXPRESS OR IMPLIED. PACCAR EXPRESSLY DISCLAIMS ANY WARRANTY OF MERCHANTABILITY OR WARRANTY OF FITNESS FOR A PARTICULAR PURPOSE.

PACCAR AND THE SELLING DEALER SHALL NOT BE LIABLE FOR INCIDENTAL OR CONSEQUENTIAL DAMAGES INCLUDING, BUT NOT LIMITED TO: LOSS OF INCOME OR LOST PROFITS; ENGINE OR VEHICLE DOWNTIME; THIRD PARTY DAMAGE, INCLUDING DAMAGE OR LOSS TO OTHER ENGINES, VEHICLES OR

https://truckmanualshub.com/

PROPERTY, ATTACHMENTS, TRAILERS AND CARGO; LOSS OR DAMAGE TO PERSONAL CONTENTS; COMMUNICATION EXPENSES; LODGING AND/OR MEAL EXPENSES; FINES; APPLICABLE TAXES OR BUSINESS COSTS OR LOSSES; ATTORNEYS' FEES; AND ANY LIABILITY YOU MAY HAVE IN RESPECT TO ANY OTHER PERSON OR ENTITY.

California Emissions Control Warranty Statement

Your Warranty Rights and Obligations

The California Air Resources Board and PACCAR are pleased to explain the emission control system warranty on your 2017-2018 model year diesel engine. In California, new motor-vehicle engines must be designed, built, and equipped to meet the State's stringent anti-smog standards. PACCAR must warrant the emission control system on your diesel engine for the periods of time listed below provided there has been no abuse, neglect or improper maintenance of your diesel engine.

Your emission control system may include parts such as the fuel injection system and engine electronic control module. Also included may be hoses, connectors and other emission related assemblies.

If an emission-related part on your engine is found to have a defect in material or factory the part will be repaired or replaced by PACCAR. This is your emission control system defects warranty.

Emissions coverage for on-highway applications in the State of California

This emission control system warranty applies to diesel engines (hereafter, engines) certified with the California Air Resources Board beginning with the year 2013, marketed by PACCAR, and registered in California for use in on-highway applications.

Manufacturer's Warranty Coverage

This warranty coverage is provided for five years or 100,000 mi (160,000) km or 3,000 hours of engine operation, whichever first occurs from the date of delivery of the engine to the first purchaser or first lessee. Where a warrantable condition exists, PACCAR will repair your engine at no cost to you including diagnosis, parts and labor.

Owner's Warranty Responsibilities

As the engine owner, you are responsible for the performance of the required maintenance listed in your PACCAR operator's manual. You are responsible for presenting your engine to an authorized PACCAR engine dealer as soon as a problem exists. The warranty repairs should be completed in a reasonable amount of time, not to exceed 30 days. PACCAR recommends that you retain all receipts covering maintenance on your engine, but PACCAR cannot deny warranty solely for the lack of receipts or for the failure to ensure the performance of all scheduled maintenance.

As the engine owner, you should also be aware that PACCAR may deny you warranty coverage if your engine or a part has failed due to abuse, neglect, improper maintenance or unapproved modifications.

If you have any questions regarding your warranty rights and responsibilities, you should contact Kenworth Truck Company 1-425-828-5000, Peterbilt Motor Company at 1-940-591-4220, or the California Air Resource Board at:

California Air Resource Board, 9528 Telstar Avenue, El Monte, CA 91731

A warranted part which is scheduled for replacement as required maintenance is

https://truckmanualshub.com/

warranted up to the first scheduled replacement point.
Prior to the expiration of the applicable warranty, the owner must give notice of any warranted emission control failure to an authorized PACCAR engine dealer and deliver the engine to such facility for repair.
The owner is responsible for incidental costs such as: communication expenses, meals, lodging incurred by owner or employees of owner as a result of a warrantable condition.
The owner is responsible for downtime expenses, cargo damage, fines, all applicable taxes, all business costs, and other losses resulting from a warrantable condition.

Emissions Components Statement

State of California emissions components statement for the PACCAR MX-11 engine coverage.

This list of emission control parts may be covered by the Emission Control System Warranty under certain failure modes.

Aftertreatment System

- Decomposition pipe and pipe elbows
- Diesel Oxidation Catalyst (DOC)
- Diesel Particulate Filter (DPF)[7]
- DPF Air/Fuel Manifold Assembly
- DPF Air Supply Pressure Sensor
- DPF Fuel Injector including air, fuel, and coolant lines
- DPF Fuel Pressure Sensor
- DPF Pressure Sensors
- DPF Temperature Sensors and Signal Conditioner
- Electronic Control Unit (ECU)
- Exhaust piping from turbocharger to last aftertreatment device
- NOx Sensor
- Pressure protection-valve and plumbing to DPF Fuel Injector
- SCR Temperature Sensor
- Selective Catalytic Reduction (SCR) Catalyst

Diesel Exhaust Fluid (DEF) System

- DEF dosing module with injection nozzle and wiring harness
- DEF level/temperature sensor
- DEF line heater control relay
- DEF lines and heating elements
- DEF pump module and associated plumbing
- DEF tank, heater, and associated plumbing
- DEF tank heater coolant control valve

Dash Lamp

- DEF lamp
- Malfunction Indicator Lamp (MIL)

Crankcase Ventilation System

- Crankcase ventilation separator and associated plumbing

Intake System

- Air intake pipe mixer
- Charge air cooler and associated plumbing
- Pressure/temperature/humidity sensor before turbocharger
- Turbocharger and associated plumbing

[7] A DPF that needs to be cleaned of ash is not a warrantable failure.

https://truckmanualshub.com/

Electronic Control System

- Ambient temperature sensor
- Camshaft Speed (CMP) sensor
- Coolant temperature sensor
- Crankshaft Speed (CKP) sensor
- Engine Control Module (ECM)
- Engine oil temperature sensor
- Exhaust Gas Recirculation (EGR) temperature sensor
- Exhaust manifold pressure sensor
- Fuel pressure sensor
- Fuel temperature sensor
- Intake manifold pressure and temperature sensor
- Lambda sensor
- NOx sensor
- Pressure sensor after exhaust throttle valve
- Temperature after turbocharger
- Turbocharger speed sensor
- Vehicle Speed Sensor (VSS)
- Water pump speed sensor
- Wiring harnesses connected at both ends to emission warranty components

Exhaust Gas Recirculation System (EGR)

- EGR cooler and associated plumbing
- EGR valve and associated plumbing

Engine

- Exhaust manifold
- Exhaust throttle valve and plumbing

Fueling System

- Fuel pumps and associated engine plumbing
- Injectors

Replacement Parts

State of California emissions statement on replacement parts.

PACCAR recommends that any service parts used for maintenance, repair or replacement of emission control systems be new or genuine PACCAR approved rebuilt parts and assemblies, and that the engine be serviced by an authorized PACCAR engine dealer . Your vehicle contains air, fuel, and electrical components that may affect engine emission controls. The use of non-genuine engine or vehicle replacement parts that are not equivalent to the PACCAR engine or OEM vehicle manufacturer’s original part may impair the engine and vehicle emissions control system from working or functioning effectively, and may jeopardize your emissions warranty coverage.
The owner may elect to have maintenance, replacement or repair of the emission control parts performed by a facility other than an authorized PACCAR engine dealer and may elect to use parts other than new or genuine approved rebuilt parts and assemblies for such maintenance, replacement or repair; however, the cost of such service or parts and subsequent failures resulting from such service or parts will not be covered under this emission control system warranty, except for “*Emergency Repairs* on page 95.”

PACCAR Responsibilities

State of California emissions statement on PACCAR's responsibility.

The warranty coverage begins when the engine is delivered to the first purchaser or first lessee. Repairs and service will be performed by any authorized PACCAR engine dealer using new or genuine PACCAR approved rebuilt parts and

https://truckmanualshub.com/

assemblies. PACCAR will repair any of the emission control parts found by PACCAR to be defective without charge for parts or labor (including diagnosis which results in determination that there has been a failure of a warranted emission control part).

Emergency Repairs

State of California emissions statement on emergency repairs.

In the case of an emergency where an authorized PACCAR engine dealer is not available, repairs may be performed by any available repair location or by any individual using any replacement parts. A part not being available within 30 days or a repair not being complete within 30 days constitutes an emergency. PACCAR will reimburse the owner for expenses (including diagnosis), not to exceed the manufacturers suggested retail price for all warranted parts replaced and labor charges based on the manufacturers recommended time allowance for the warranty repair and the geographically appropriate hourly labor rate.
Replaced parts and paid invoices must be presented at an authorized PACCAR engine dealer as a condition of reimbursement for emergency repairs not performed by an authorized PACCAR engine dealer .

Warranty Limitations

State of California emissions statement on warranty limitations.

Your sole and exclusive remedy against PACCAR and the selling dealer arising from your purchase and use of this engine is limited to the repair or replacement of “warrantable failures” at authorized United States and Canadian PACCAR engine dealers , or an authorized PACCAR engine facility where applicable, subject to PACCAR’s time, mileage, and hour limitations of the engine warranty. The maximum time, mileage and hour limitations of the engine warranty begin running on the date of delivery to the first purchaser or first lessee. The accrued time, mileage, or hours is calculated when the engine is brought into an authorized dealer for correction of warrantable failures.
Failures, other than those resulting from defects in material or factory workmanship, are not covered by this warranty. PACCAR is not responsible for failures or damage resulting from what PACCAR determines to be abuse or neglect, including, but not limited to: damage due to accident; operation without adequate coolants or lubricants; overfueling; overspeeding; lack of maintenance of lubricating, cooling or intake systems; improper storage, starting, warm-up, run-in or shutdown practices; failure to perform regeneration in a timely manner; unauthorized modifications of the engine. PACCAR is also not responsible for failures caused by incorrect oil or fuel or diesel exhaust fluid or by water, dirt or other contaminants in the fuel, oil, or diesel exhaust fluid. Failure of replacement parts used in repairs due to the above non-warrantable conditions is not warrantable. PACCAR is not responsible for failures resulting from improper repair or the use of parts which are not genuine PACCAR approved parts.
PACCAR is not responsible for the material and labor costs of emission control parts and assemblies replaced during Scheduled Maintenance of the engine as specified in PACCAR Operator’s Manuals.
PACCAR does not warrant antifreeze, lubricants, filters, filter elements, or any other part which is considered a maintenance item. PACCAR does not warrant services to remove ash from the DPF either at or before a regular service interval as indicated in the maintenance schedule or when the system indicates that

https://truckmanualshub.com/

the DPF requires cleaning unless the service is required as part of a warrantable repair.

THIS WARRANTY, TOGETHER WITH THE EXPRESS COMMERCIAL WARRANTIES ARE THE SOLE WARRANTIES MADE BY PACCAR IN REGARD TO THESE ENGINES.

THIS LIMITED EMISSIONS WARRANTY IS THE SOLE WARRANTY MADE BY PACCAR AND THE SELLING DEALER. EXCEPT FOR THE ABOVE LIMITED WARRANTY, PACCAR AND THE SELLING DEALER MAKE NO OTHER WARRANTIES, EXPRESS OR IMPLIED. PACCAR AND THE SELLING DEALER EXPRESSLY DISCLAIM ANY WARRANTY OF MERCHANTABILITY OR WARRANTY OF FITNESS FOR A PARTICULAR PURPOSE.

PACCAR AND THE SELLING DEALER SHALL NOT BE LIABLE FOR INCIDENTAL OR CONSEQUENTIAL DAMAGES INCLUDING, BUT NOT LIMITED TO: LOSS OF INCOME OR LOST PROFITS; ENGINE OR VEHICLE DOWNTIME; THIRD PARTY DAMAGE, INCLUDING DAMAGE OR LOSS TO OTHER ENGINES, VEHICLES OR PROPERTY, ATTACHMENTS, TRAILERS AND CARGO; LOSS OR DAMAGE TO PERSONAL CONTENTS; COMMUNICATION EXPENSES; LODGING AND/OR MEAL EXPENSES; FINES; APPLICABLE TAXES OR BUSINESS COSTS OR LOSSES; ATTORNEYS' FEES; AND ANY LIABILITY YOU MAY HAVE IN RESPECT TO ANY OTHER PERSON OR ENTITY.

https://truckmanualshub.com/

https://truckmanualshub.com/

Index

A

Additives to Cooling System *42*
After Replacing Engine Oil Filter(s) *56*
Aftertreatment Exhaust Piping *30*
Air Cleaner *75*
Air Cleaners *75*
Air Compressor *75*
Air Filter Restriction Indicator *77*
Air Intake Piping *30*
Air Intake System *74*
Antifreeze *64*

B

Batteries, Cables, and Connections *78*
Biodiesel *60*

C

Charge Air Cooler *75*
Charge Air Piping *75*
Chassis Fuel Filter / Water Separator *30*
Check Engine Lamp Turns On *11*
Checking Coolant Condition *65*
Cleaning the Engine *29*
Cold Weather Starting *21*
Composite oil pan *51*
Compression Brake *17*
Compression Brake Controls *17*
Coolant Filter Installation *66*
Coolant Level *30*
Cooling Fan *30*
Cooling System *64*
Cooling system maintenance *42*
Cooling System Overheating *12*
Crankshaft - Vibration Damper *78*

D

Diesel Exhaust Fluid *31*
Diesel Exhaust Fluid (DEF) filter *73*
Diesel Exhaust Fluid (DEF) Lamp *16*
Diesel Particulate Filter (DPF) *72*
Diesel Particulate Filter (DPF) Warning Lamp *15*
Drive Belts *68*
Driving *19*

E

Electrical Harness / Cables *78*
Electromagnetic Interference *22*
Engine Air filter *76*
Engine Belt Checks *69*
Engine Braking System *16*
Engine Compression Brake Level Switch Operation *18*
Engine Coolant Specifications *45*
Engine Cooling Recommendations and Specifications *42*
Engine Fan *69*
Engine Fuel Filter / Water Separator *29*
Engine is overheating *12*
Engine Lubricating Oil Recommendations and Specifications *39*
Engine Lubrication and Filter Intervals *40*
Engine Maintenance *29*
Engine Mounting Bolts *78*

Engine Oil Filter *52*
Engine Oil Filter Specificaitons *38*
Engine Oil Level *49*
Engine Oil Level Check *31*
Engine Oil Pressure Lamp Turns On *11*
Engine Oil Specifications *40*
Engine Operating Range *22*
Engine Shutdown *22*
Engine Specifications for operator manual *37*
Engine Valves *79*
Engine Warning Lamps *14*
Engine, Check Engine *14*
Exhaust Brake *16*
Exhaust System *78*
Extended Life Coolant *45*

F

Fan Belt Tensioner *69*
Forward *6*
Fuel Filter *60*
Fuel Filter Installation *61*
Fuel Filter Removal *61*
Fuel Recommendations *46*

G

General Safety Instructions *7*

H

High Exhaust System Temperature (HEST) Warning Lamp *15*

I

Illustrations *7*

M

Maintenance Schedule Intervals *31*
Malfunction Indicator Lamp *15*
MX-11 *46*, *65*
MX-13 *46*, *65*

N

Normal Starting Procedure *20*

O

Oil Filter Installation *54*
Oil Filter Removal *53*
Oil Filter Removal Preparation *52*
Oil Level Indication on Dipstick *50*
Oil Pan Drain Plug *51*
Operating on Grades and Dry Pavement *24*
Operating on Level and Dry Pavement *23*
Operating the Engine *21*

P

Poly V-belt and Fan Drive Belts *70*
Poly V-belt and Fan Drive Install *70*
Poly V-belt, Alternator, Air-Conditioning Compressor Drive and Coolant Pump Drive Install *72*
Poly V-belt, Alternator, Air-Conditioning Compressor Drive and Coolant Pump Drive Removal *71*
Preventative Maintenance Schedule *34*

R

Radiator Fill Procedure *66*

https://truckmanualshub.com/

Radiator Hoses *65*
Recommendations to Avoid Fuel Gelling *48*
Replace Coolant Filter *65*
Roadside Assistance *10*

S

Safety *5*
Safety Alerts *5*
Serviceable Crankcase Ventilation (CCV) System *56–58*, *60*
Starting After the Fuel Tank Has Run Dry *62*
Starting Procedure After Extended Shutdown or Oil Change *21*
Stop Engine Lamp *10*, *14*

T

Topping Up the Engine Oil *50*
Turbocharger *77*

U

Under hood air cleaner *76*
Under Hood Air Cleaner *75*

V

Visual Inspection of Engine *31*

W

Warranty and the Use of Biodiesel Fuel *48*

https://truckmanualshub.com/

https://truckmanualshub.com/

PACCAR Inc
Engines
P.O. Box 1518
Bellevue, WA 98009

Y53-1166-1F1