https://truckmanualshub.com/

Shibaura Diesel Engine

Operation Manuals

E673L

S773L

N843

N843L

N844L

N844L-T

Supported by
Hustler Turf Equipment Company
and
Excel Industries, Inc.

Downloaded from www.Manualslib.com manuals search engine

https://truckmanualshub.com/

Downloaded from www.Manualslib.com manuals search engine

https://truckmanualshub.com/

FOREWORD

The IHI Shibaura Machinery Corporation (ISM) industrial diesel engines are a product of ISM's long years of experience, advanced technology. Shibaura takes great pride in the superior durability and operating economy of these engines.

In order to get the fullest use and benefit from your industrial engine, it is important that you operate and maintain it correctly.

This Manual is designed to help you do this.

Please read this Manual carefully and follow its operating and maintenance recommendations. This will ensure many years of trouble-free and economical engine operation.

Should your engine require servicing, please contact your nearest Authorized Hustler Turf Dealer. He knows your engine best and is ready to meet your needs.

All information, illustrations, and specifications contained in this Manual are based on the latest product information available at the time of publication.

Shibaura reserves the right to make changes in this Manual at any time without prior notice.

CALIFORNIA
Proposition 65 Warning

Diesel engine exhaust and some of its constituents are known to the State of California to cause cancer, birth defects, and other reproductive harm.

Battery posts, terminals and related accessories contain lead and lead compounds, chemicals known to the State of California to cause cancer and birth defects or other reproductive harm. Wash hands after handling.

Downloaded from www.Manualslib.com manuals search engine

https://truckmanualshub.com/

FEDERAL and CALIFORNIA EMISSIONS WARRANTY

WARRANTY STATEMENT

IHI Shibaura Machinery Corporation (ISM) warrants that your 2004 and later non-road diesel engine was designed, built and equipped to conform to applicable U.S. Environmental Protection Agency (EPA) and California Air Resources Board (CARB) regulations and is free from defects in materials and workmanship which cause it to fail to conform with such regulations, for the following period of operation:

- For a period of two (2) years or 1,500 hours of operation, whichever occurs first, after the date of delivery to the initial retail owner of any variable speed non-road diesel engine rated at less than 19kW (25hp) and any constant-speed non-road diesel engine rated at less than 37 kW (50hp) with rated speed greater than or equal to 3,000 min $^{-1}$.
- For a period of five (5) years or 3,000 hours of operation, whichever occurs first, after the date of delivery to the initial owner for all other non-road diesel engines.

WARRANTY INFORMATION

The model year, class of diesel engine, and emission application for your engine are identified on the emission control information label affixed to the right hand side of your engine's timing gear case.

Any emission control system parts that are proven defective during normal use will be repaired or replaced during the warranty period.

The warranty repair or replacement will be performed by any Authorized Hustler Turf Dealer or the distributor of the original equipment manufacturer, with no charge for parts or labor (including diagnosis).

As the engine owner, you are responsible to perform all the required maintenance listed in your owner's manual.

ISM will not deny an emission warranty claim solely because you have no record of maintenance; however, a claim may be denied if your failure to perform maintenance resulted in the failure of a warranted part. Receipts covering regular maintenance should be retained in the event of questions and these receipts should be passed on to each subsequent owner of the engine.

It is recommended that replacement parts used for maintenance or repairs be ISM Service Parts to maintain the quality originally designed into your emission certified engine. The use of non-ISM parts does not invalidate the warranty on other components unless the use of such parts causes damage to warranted parts.

ISM wishes to assure that the emission control systems warranty is being properly administered. If you believe you have not received the service to which you are entitled to under this warranty, you should contact your Authorized Hustler Turf Distributor.

EXCEPTIONS

Please note that Emission Warranty does not cover the following:

1. Diagnosis or inspection expenses that do not result in eligible claim.
2. Consequential damage such as loss of time, inconvenience, loss of use of the engine or equipment.
3. Replacement parts used for required maintenance.
4. Conditions resulting from tampering, misuse, abuse, improper adjustment, engine alteration, use of add-on or modified parts, use of replacement parts that are not the same in performance and durability as the approved parts, accident, failure to use recommended fuel or oil, use of unapproved fuel or oil additives, or not performing required maintenance.
5. Damages or repair costs caused by the Owner's unreasonable delay in making the engine available for inspection and repair.
6. Replacement parts used for required or scheduled maintenance.

PARTS COVERED

This emission control system warranty applies to the following emission control parts.

- Fuel Injection Pump
- Fuel Injectors
- Intake Manifold
- Exhaust Manifold Turbocharger (if equipped)
- Positive Crankcase Ventilation system parts (including PCV Valve and Oil Filler Cap)

Downloaded from www.Manualslib.com manuals search engine

https://truckmanualshub.com/

TABLE OF CONTENTS

Safety 6
Engine external views
Engine main parts nomenclature 6
General information
3.1 Engine data and specifications 7
ISM engine after service 7
Fuel, lubricant and coolant
5.1 Fuel 8
5.2 Lubricant 9
5.3 Coolant 10
Engine operation 10
6.1 Check before operation 10
6.2 Engine starting 12
6.3 Check and operation after the engine start-up 13
6.4 Precautions during engine operation 13
6.5 Engine stopping 15
6.6 Run-in (break-in) for new engine 15
6.7 Engine care for over cooling 15
6.8 Starting the engine after being left unused for a long period of time 15
Periodic inspection and maintenance
7.1 Lubricating system 15
7.2 Cooling system 17
7.3 Fuel system 18
7.4 Air intake system 19
7.5 Engine electricals 19
7.6 Engine assembly and others 20
Engine care in cold season 22
8.1 Fuel 22
8.2 Coolant 22
8.3 Engine oil 22
8-4 Battery 22
8-5 Engine starting 22
Engine maintenance schedule 23
Simple engine troubleshooting 25

Downloaded from www.Manualslib.com manuals search engine

https://truckmanualshub.com/

1. Safety

Introduction

This Operation Manual contains the information you will need to operate the engine correctly. Check that you have the correct Operation Manual for your engine.

Read the book carefully before operating or servicing the engine. Incorrect operation or servicing of the engine could result in personal injury or material damage as well as damaging the engine itself. **If you do not understand or are uncertain on any operation in this book, contact your dealer who can explain or demonstrate the procedure for you.**

Warning and Caution

In this manual and on the engine you will find the following special warning symbols.

Safety Warnings

WARNING: This means there is something that could hurt you or other people.

In the warning area, we tell you what the hazard is. Then we tell you what to do to help avoid or reduce the hazard. Please read these warnings. If you don't, you or others could be hurt.

Engine or Equipment Damage Warnings

CAUTION: This means there is something that could damage your engine or equipment.

In the caution area, we tell you about something that can damage your engine or equipment. Many times, this damage would not be covered by your warranty, and it could be costly. But the caution will tell you what to do to help avoid the damage.

2. Engine external views

Engine main parts nomenclatures

1. Stop solenoid
2. Oil filler cap
3. Nozzle and holder
4. Fan
5. Engine control lever
6. Oil dipstick
7. Oil sump
8. Injection pump
9. Oil drain plug
10. Flywheel
11. Oil filter
12. Water drain cock
13. Air intake
14. Head cover
15. Exhaust manifold
16. Starting motor
17. Alternator
18. Crankshft pulley
19. Belt

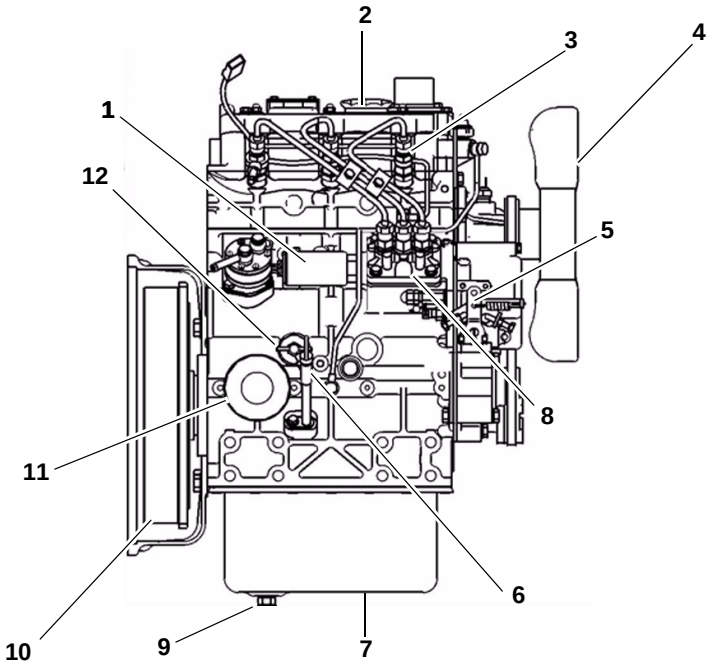

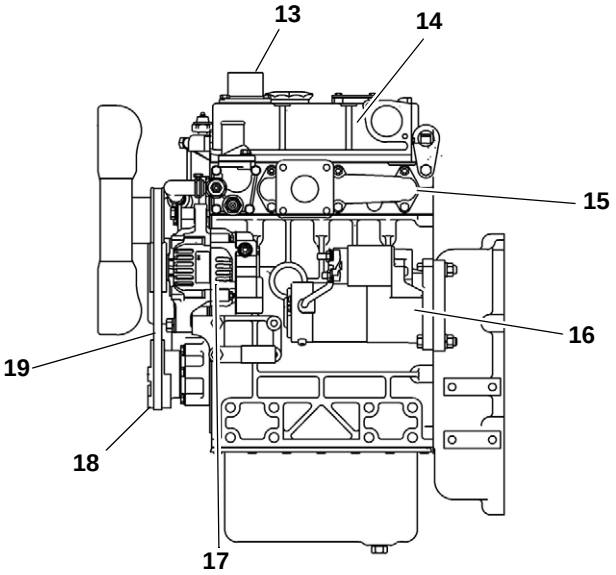

Downloaded from www.Manualslib.com manuals search engine

https://truckmanualshub.com/

3. General Information

3.1.Engine data and specifications

Model Name		E673L	S773L	N843	N843L	N844L	N844L-T
Engine Type		Four cycle, water-cooled, in-line overhead valve type					
Combustion type		Swirl chamber					
No.of cylinder-bore×stroke (mm)		3 - 67×72	3 - 77×81	3 - 84×90	3 - 84×100	4 - 84×100	4 - 84×100
Engine displacement (L)		0.761	1.131	1.496	1.662	2.216	2.216
Compression ratio		23.5	23.5	22.5	22.5	22.5	22.5
* Max output		16.5hp/3000 (12.3kW/3000) 18.5hp/3600 (13.8kW/3600)	24.7hp/3000 (18.4kW/3000) 29.1hp/3600 (21.7kW/3600)	29.4hp/2600 (21.9kW/2600) 30.8hp/3600 (23.0kW/3000)	32.6hp/2600 (24.3kW/2600) 34.2hp/3600 (25.5kW/3000)	44.9hp/2600 (33.5kW/2600) 46.3hp/3600 (35.0kW/3000)	54.7hp/2600 (40.8kW/2600) 56.8hp/3600 42.4kW/3000
* Rated output		13.8hp/3000 (10.3kW/3000) 15.4hp/3600 (11.5kW/3600)	23.3hp/3000 (17.4kW/3000) 24.8hp/3600 (18.5kW/3600)	16.6hp/1500 (12.4kW/1500) 19.7hp/1800 (14.7kW/1800)	N/A N/A N/A N/A	25.3hp/1500 (18.9kW/1500) 29.6hp/1800 (22.1kW/1800)	31.1hp/1500 (23.2kW/1500) 37.8hp/1800 (28.2kW/1800)
* Engine dimension	Overall length (in) (mm)	17.4 (443)	17.8 (453)	21.0 (534)	21.0 (534)	25.1 (637)	25.3 (642)
	Overall width (in) (mm)	15.2 (385)	15.1 (384)	18.1 (459)	18.1 (459)	17.8 (453)	20.3 (516)
	Overall height (in) (mm)	21.5 (546)	23.6 (600)	25.9 (657)	27.1 (689)	28.1 (713)	27.5 (698)
* Engine dry weight (lbs.) (kg)		165.3 (75)	191.8 (87)	330.7 (150)	352.7 (160)	429.9 (195)	447.5 (203)
Direction of rotation		Counter clockwise (Look at Flywheel side)					
Coolant volume (Engine only) (qt) (L)		1.37 (1.3)	2.00 (1.9)	2.85 (2.7)	2.96 (2.8)	3.80 (3.6)	3.80 (3.6)
Lubrication method		Pressurized circulation by trochoid pump					
Lub. Oil volume (qt) (L)		3.28 (3.1)	5.18 (4.9)	2.85 (2.7)	6.34 (6.0)	8.66 (8.2)	8.66 (8.2)
Specified engine oil (API grade)		Quality better than CD class(API)					
* Alternator (V-A)		12-14	12-15	12-40			
* Starting Motor (V-kW)		12-0.8	12-1.7	12-2.0			
Specified fuel		SAE NO. 2-D, DIN 51601, BS Class A-1					
Governor		Centrifugal all-speed control					

NOTE:

1. The specifications above are subject to partial changes without notice.
2. Asterisked (*) items may vary depending on the type of equipment in which the engine is installed.

4. Shibaura Engine Service

(1) Shibaura Engine After Service

Please feel free to contact your Hustler Turf Equipment Dealer which is authorized by Shibaura for periodic inspection and maintenance.

When ordering service or spare parts always quote the engine model name and serial number.

(2) Engine Identification

The engine serial number and engine model are stamped on the front upper right side of the cylinder body.

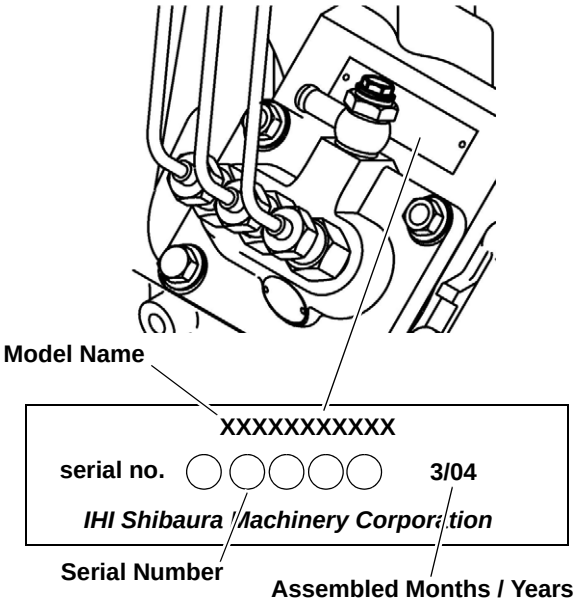

Downloaded from www.Manualslib.com manuals search engine

https://truckmanualshub.com/

5. Fuel, Lubricant & Coolant

5.1 Fuel

(1) Fuel Selection

The following specific characteristics are required for the diesel fuel.

1. Must be free from minute dust particles.
2. Must have adequate viscosity.
3. Must have high cetane value.
4. Must have high fluidity at low temperature.
5. Must have low sulfur content.
6. Must have little residual carbon.

Diesel fuels

Applicable Standard	Recommendation
JIS (Japanese Industrial Standard	NO. 2
DIN (Deutsche Industrie Normen)	Din 51601
SAE (Society of Automotive Engineers) Based on SAE-J-313C	NO. 2-D
BS (British Standard) Based on BS/2869-1970	Class A-1

(2) Fuel Requirements

CAUTION: The fuel injection pump, injector or other parts of the fuel system and the engine can be damaged if you use any fuel or fuel additive other than those specifically recommended by Shibaura. Such damage is not Shibaura's responsibility, and is not covered by the Warranty. To help avoid fuel system or engine damage, please be aware of the following:
Some service stations mix used engine oil with diesel fuel. Some manufacturers of large diesel engines allow this; however, for your diesel engine, do not use diesel fuel which has been contaminated with engine oil. Besides causing engine damage, such fuel can also affect emission control. Before using any diesel fuel, check with the service station operator to see if the fuel has been mixed with engine oil.
Do not use any fuel additive (other than as recommended under "Biocide" in this section). At the time this manual was printed, no other fuel additive was recommended. (See your authorized dealer to find out if this has changed.)

Your engine is designed to use either Number 1-D or Number 2-D diesel fuel. However, for better fuel economy, use Number 2-D diesel fuel whenever possible. At temperatures less than -7°C, (20°F), Number 2-D fuel may pose operating problems (see "Cold Weather Operation" which follows). At colder temperatures, use Number 1-D fuel (if available) or use a "winterized" Number 2-D (a blend of Number 1-D and Number 2-D). This blended fuel is usually called Number 2-D also, but can be used in colder temperatures than Number 2-D fuel which has not been "winterized". Check with the service station operator to be sure you get the properly blended fuel.

Note that diesel fuel may foam during a fill-up. This can cause the automatic pump nozzle to shut off even though your tank is not full.

CAUTION: Do not use home heating oil or gasoline in your diesel engine; either may cause engine damage.

(3) Handling of the Fuel

Fuel containing dust particles or water will cause engine failure. Therefore, the following notice must be observed.

1. Prevent dust particles or water from entering when filling the fuel tank.
   When fueling is done from an oil drum directly, keep the drum stationary for a period of time to allow the sediment to go to the bottom of the drum.
2. Always fully fill the fuel tank. Drain the sedimented particles in the fuel tank frequently by opening the tank drain and draining the fuel into approved fuel containers.

(4) Water in Fuel

During refueling, it is possible for water (and other contaminants) to be pumped into your fuel tank along with the diesel fuel. This can happen if a service station does not regularly inspect and clean its fuel tanks, or if a service station receives contaminated fuel from its supplier(s).

To protect your engine from contaminated fuel, there is a fuel filter system on the engine or equipment which allows you to drain excess water.

WARNING: The water/diesel fuel mixture is flammable, and could be hot. To help avoid personal injury and/or property damage, do not touch the fuel coming from the drain valve, and do not expose the fuel to open flames or sparks.
Be sure you do not overfill the container. Heat (such as from the engine) can cause the fuel to expand. If the container is too full, fuel could be forced out of the container. This could lead to a fire and the risk of personal injury and/or vehicle or equipment damage.

(5) Biocides

In warm or humid weather, fungus and/or bacteria may form in diesel fuel if there is water in the fuel.

CAUTION: Fungus or bacteria can cause fuel system damage by plugging the fuel lines, fuel filters or injector. They can also cause fuel system corrosion.

Downloaded from www.Manualslib.com manuals search engine

If fungus or bacteria has caused fuel system problems, you should have your authorized dealer correct these problems. Then, use a diesel fuel biocide to sterilize the fuel system (follow the biocide manufacturer's instructions). Biocides are available from your dealer, service stations, parts stores and other automotive places. See your authorized dealer for advice on using biocides in your area and for recommendations on which biocides you should use.

(6) Smoke Suppressants

Because of extensive testing of treated fuel versus untreated fuel, the use of a smoke suppressant additive is not recommended because of the greater possibility of stuck rings and valve failure, resulting from excessive ash deposits.

5.2 Lubricant

The quality of engine oil may largely affect engine performance, startability and engine life.

Use of unsuitable engine oil will result in piston ring, piston and cylinder seizure and accelerate the sliding surface wear causing increased oil consumption, lowered output and, finally engine failure. To avoid this, use the specified engine oil.

(1) Engine Oil Selection

Quality better than CD grade by API classification engine oil must be used for the Shibaura engines.

(2) Oil Viscosity

Engine oil viscosity largely affect engine startability, performance, oil consumption, speed of wear and occurrence of seizure, etc.

Using lubricants with viscosity rated according to the atmospheric temperature is important.

CAUTION:

1. Using a mixture of different brand or quality oils will adversely affect the original oil quality; therefore, never mix different brands or different types of oils.
2. Don't use API, CA, CB grade and reconstituted engine oil.
3. Engine damage due to improper maintenance, or using oil of the improper quality and/or viscosity, is not covered by the warranty.

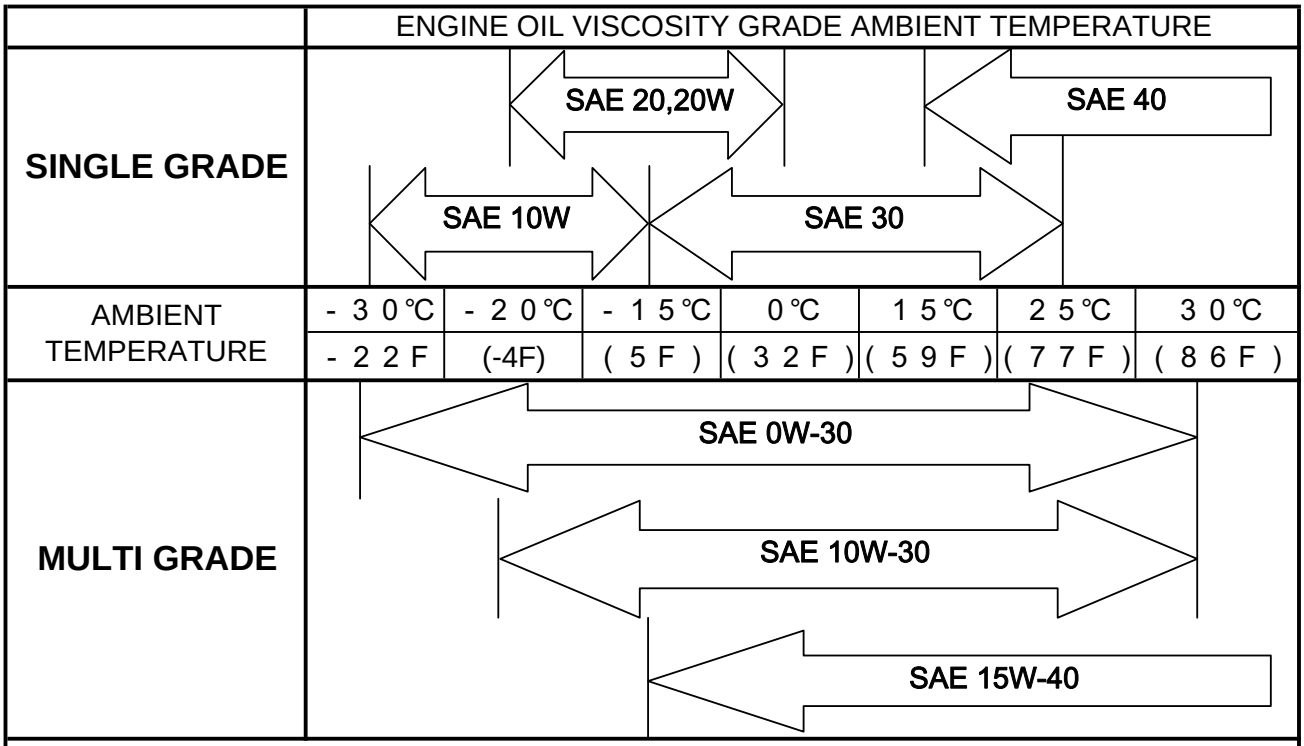

FIG-1

Downloaded from www.Manualslib.com manuals search engine

https://truckmanualshub.com/

5.3 Coolant

Use 50/50 mix Ethylene Glycol and water for coolant and replace it periodically. (Refer to section 8.2)

6. Engine Operation

Engine Exhaust Gas Caution (Carbon Monoxide)

WARNING: Do not breathe exhaust gas because it contains carbon monoxide, which by itself has no color or odor. Carbon monoxide is a dangerous gas. It can cause unconsciousness and can be lethal.

If at any time you think exhaust fumes are entering the cab, have the cause determined and corrected as soon as possible. If you must drive under these conditions, drive only with all windows fully open. Protect against carbon monoxide entry into the cab. The best way is to keep the engine exhaust system, cab and cab ventilation system properly maintained. We recommend that the exhaust system and cab be inspected by competent technician:

- Each time the vehicle has an oil change.
- Whenever a change is noticed in the sound of the exhaust system.
- Whenever the exhaust system, underbody or cab is damaged or becomes corroded.

See the "Maintenance Schedule" in this manual for parts requiring inspection.

To allow proper operation of your vehicle's ventilation system, keep the air inlet grille clear of snow, leaves or other obstructions at all times. Do not run the engine in confined areas (such as garages or next to building) any more than needed to move the vehicles or the equipment.

Keep the exhaust tailpipe area clear of snow and other material to help reduce the buildup of exhaust gases under the vehicle or the equipment. This is particularly important when parked in blizzard conditions.

6.1 Check Before Operation

WARNING: For safety's sake, conduct the inspection before start-up with the engine stopped.

(1) Engine Oil Level

1. Place the engine on a level surface.
2. Remove the dipstick from the crankcase, wipe it with a clean shop towel or cloth.
   Insert it fully and remove it gently again.
   Check the oil level by the level marks on the dipstick.
   The oil level must be between the "Max." level mark and the "Min." level mark as illustrated.
   Take care not to add too much engine oil.
   - Drain oil to the max. oil level if oil level is above the max. level mark.
   - Add oil to the max. oil level if oil level is below the min. level mark.
3. Also check the sample oil on the dipstick for fouling and degrees of viscosity.

CAUTION: Oil level check must be made ten or twenty minutes after the engine has been stopped. When the oil level check is necessary while the engine is running, stop the engine and keep it stationary ten or twenty minutes until the oil thoroughly flows down to the oil pan.

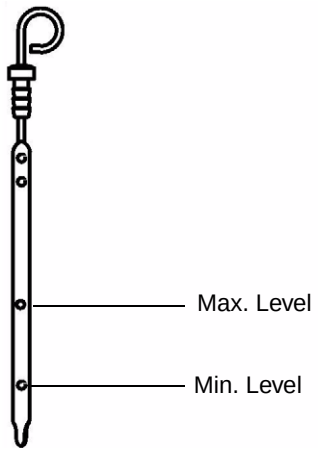

Engine oil replenishment

Changing the oil

1. Before adding engine oil, place the unit on a level surface, then remove the dipstick to provide crankcase ventilation.
2. **MODELS E673L, S773L, N844L, N844L-T ONLY**
   Add engine oil slowly. Pouring the oil too quickly can result in the oil overflowing into the air breather valve and then into the air intake manifold. Cranking the engine with oil in the manifold will severely damage the engine.
   NOTE: If oil has entered the air intake manifold it will be necessary to clean the oil from the cylinders. To clean the cylinders, remove the fuel injection nozzles and turning the engine with the starter until all oil is exhausted.
   When changing the engine oil, add the exact amount specified in the engine owner's manual.
   NOTE: Use CD grade or better by API classification engine oil.
   MODELS N843 & N843L ONLY — Add oil at the oil fill shown.
   When changing the engine oil, add the exact amount specified in the engine owner's manual.
   Use CD grade or better by API classification engine oil.
3. Wait about fifteen minutes until the oil gets down to the oil pan. Then check the oil level with a dipstick. A certain period of time is required before the engine oil completely flows down from the oil filler to the crankcase.

Downloaded from www.Manualslib.com manuals search engine

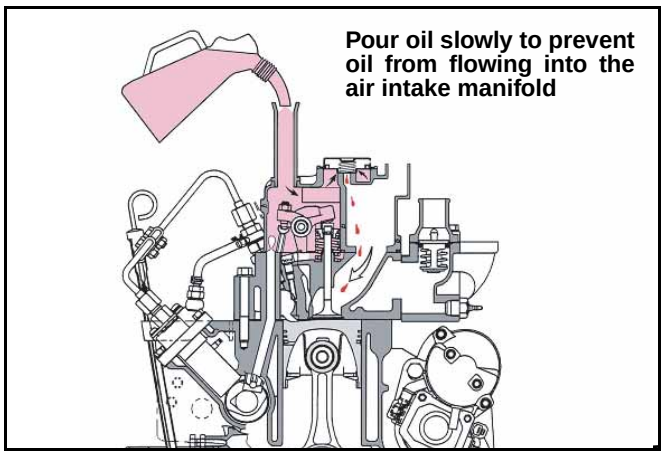

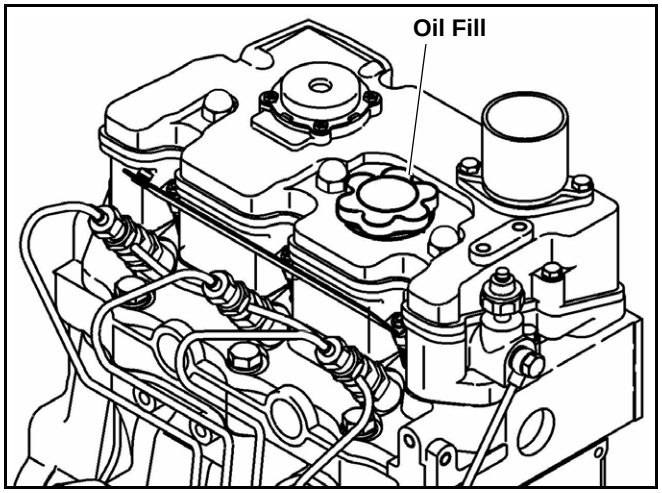

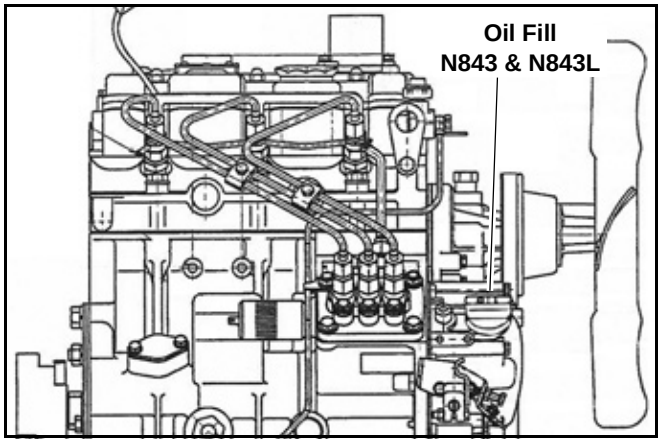

CAUTION: If the engine oil is splashed on the fan drive belt, it causes belt slippage or slackness; therefore, take care to avoid it.

WARNING: In adding oil, take care not to spill it. If you spill oil on engine or equipment, wipe it properly, or this could lead to a fire and the risk of personal injury and/or equipment damage.

(2) Fan Belt Check

Check the fan belt for tension and abnormalities.

1. When the belt is depressed about 5 mm (0.197 in) with the thumb (about 50 N (11 lb) pressure) at midway between the fan pulley and alternator pulley, the belt tension is correct.
   When the belt tension is too high, it will result in alternator failure.
   Also, a loose belt will cause belt slippage which may result in damaged belt and abnormal noise.
2. Check the belts. Replace them if any damage is found.

CAUTION: Replace all belts as a set even when one is not usable. Single belt of similar size must not be used as a substitute for a matched belt set. Otherwise, premature belt wear would result because of uneven belt length.

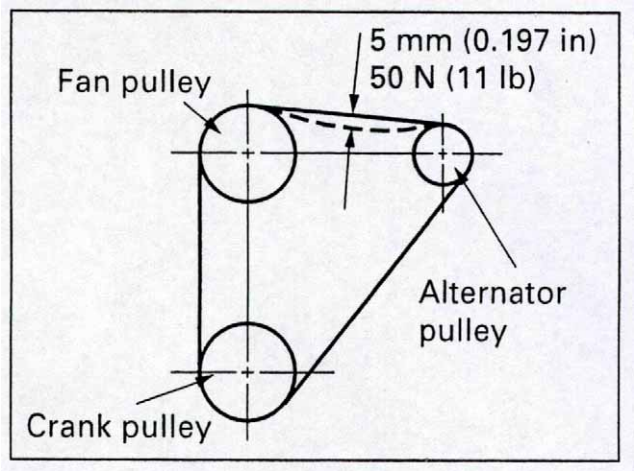

(3) Coolant Level Check

1. The coolant level must be midway between "FULL" and "LOW" marks of the reserve tank.
   Check and see that the level is correct.
   When the coolant level is lower than the "LOW" mark, fill the reserve tank at the filler port, but when the reserve tank is empty, fill at the radiator filler port.
2. Remove the radiator filler cap, and check the coolant level.
   Fill radiator to 2.54 cm (1”) below the filler cap.

WARNING: Do not remove the radiator filler cap while the engine is still hot. Allow the engine to cool and then cover the cap with a cloth, turn it slowly to gradually release the pressure. Then remove the cap.

3. Use only 50/50 anti-freeze and water as a coolant.

(4) Radiator Cap Condition

After the replenishment of the coolant, install the radiator cap. Make sure the cap is securely installed.

Downloaded from www.Manualslib.com manuals search engine

(5) Battery Cable Connection

Check the battery cable connections for looseness or corrosion.

A loose cable connection will result in hard engine starting or insufficient battery charge.

The battery cables must be tightened securely.

Never reverse "+" and "-" terminals when reconnecting cables.

Even a short period of reverse connection will damage the electrical parts.

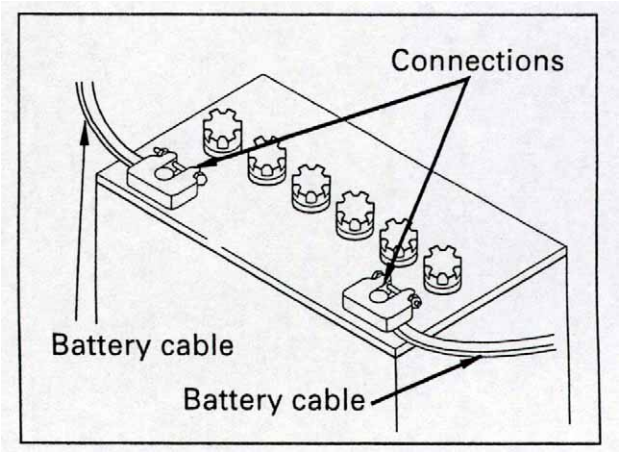

(6) Battery Electrolyte Level

The amount of electrolyte in the batteries will be reduced after repeated discharge and recharge.

Check the electrolyte for the level in the batteries, refill with distilled water, if necessary.

The battery electrolyte level checking procedure will vary with battery type. Follow the equipment manufacturer's instructions.

CAUTION: Do not replenish with diluted sulfuric acid in the daily service.

WARNING:

1) When inspecting the battery, be sure to stop the engine.

2) As sulfuric acid is used as electrolyte, avoid contact with eyes, hands, clothes, and metals. If it gets in your eyes, flush with large amounts of water at once. Then consult a physician immediately.

3) Since batteries produce hydrogen gas, do not make a spark or use fire near the battery.

4) When handling metal objects near the batteries, be sure not to contact the battery's "+" terminal. As the vehicle body is "-", it may cause a spark or electrical shock.

5) When disconnecting the terminals, start with the negative "-" terminal. When connecting them, connect the negative "-" terminal last.

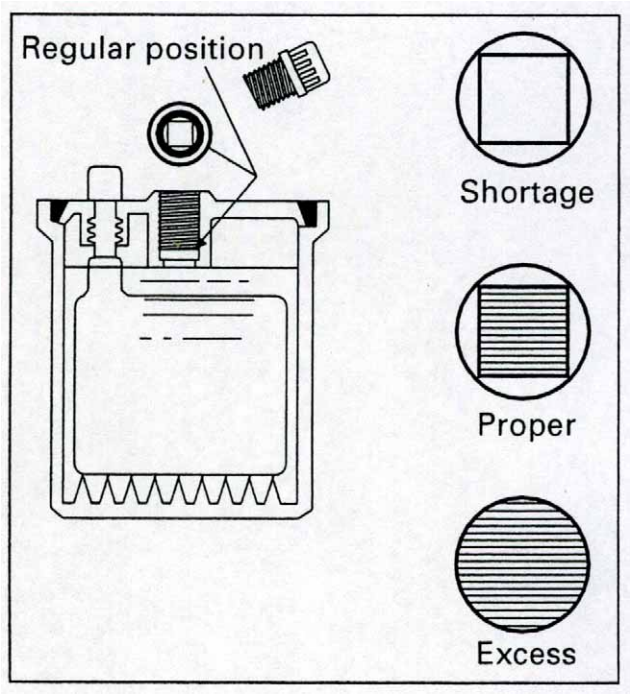

6.2 Engine Starting

(1) Preparation before starting

1. Make sure that all hydraulic control levers etc. on the equipment are in the "NEUTRAL" position.
2. Insert the key into the key switch.
   Turn the key clockwise to "RUN" position and, make sure that the meters and warning lamps are actuated. When any abnormality is discovered, turn the key to the "OFF" position and locate the cause of the abnormality.

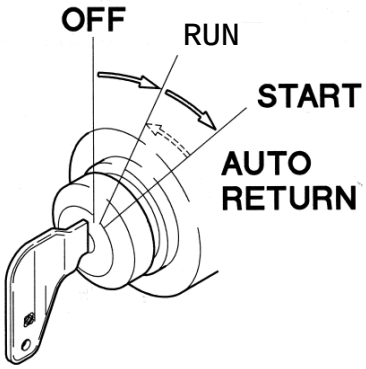

(2) Pre-heating Procedure

As an engine starting aid, pre-heating is required for cold engine starting.

1. Turn the starter key clockwise to the "PRE-HEAT" position in order to heat the glow plugs on the engine.
   The pre-heating time varies depending on the types of pre-heating system as follows:

Downloaded from www.Manualslib.com manuals search engine

● The type with an indicator light, 10 seconds are required until the indicator light at the instrument panel goes off.

2. Turn the starter key clockwise to the “START” position as soon as the indication lamp goes off.

(3) Engine Starting

1. Depress the engine throttle lever or throttle pedal and turn the starter key clockwise to the “START” position.
   The cranking period must not exceed ten seconds.
   Continuous starter operation of more than ten seconds will lead to over discharge of the batteries as well as starter seizure.
   If the engine cannot be started in a one time attempt, wait at least 30 seconds for their functional recovery, then repeat the pre-heating and the starting operations.

CAUTION: Continuous re-engagement of the starter to the flywheel ring gear will result in damaged starter pinion gear and flywheel ring gear.

2. If, after repeated attempts, the engine does not start, wait for a minute or more, then repeat pre-heating and starting operations.
3. When repeating starting operation, return the key to the OFF position and then pre-heat and start the engine once again.
   If the engine still will not start, something may be wrong with the engine. Contact your Authorized Hustler Turf dealer/service shop if the problem can not be located.

CAUTION: Do not use starting "aids" in the air intake system. Such aids can cause immediate engine damage.

6.3 Check and Operation After Engine Start-up

(1) Engine Warm-up Procedure

Run engine at Low or Middle speed about ten minutes after the engine has started.

As the lubrication for the entire engine systems will be done in this warming-up, do not speed up and load it abruptly. Particularly, observe this in cold season operation.

(2) Check After the Engine Start-up

Check the following items during engine warm-up operation.

1. Engine oil pressure
   Check to see if the oil warning lamp is off.
2. Charge condition
   Check to see if the charge warning lamp is off.
3. Engine noise and exhaust smoke color
   Pay attention to engine noise and, if any abnormal noise is heard, check the engine to detect the cause.
   Check the fuel combustion condition by exhaust smoke color.
   The exhaust smoke color after engine warming-up and at no load operation:
   Colorless or
   light blue . . . . . .Normal (Perfect combustion)
   Black color . . . . . .Abnormal (Imperfect combustion)
   White color . . . . . .Abnormal (Imperfect combustion)

CAUTION: Engine noise after start-up might be noisier than that of warmed-up engine and, the exhaust smoke color also may be blacker than the normal condition. However, it should normalize after warm-up.

Leakage in the systems

Check the following items:

1. Oil leaks
   Check both sides and bottom of the engine assembly for oil leaks, paying particular attention to the oil pressure gauge pipe joint, oil filter and oil pipe joints.
2. Fuel system leaks
   Check the fuel injection pump, fuel lines and fuel filter for leakage.
3. Coolant leaks
   Check the radiator and water pump hose connections and the water drain cocks on the radiator and cylinder blocks for leakage.
4. Exhaust smoke or exhaust gas leakage

Checking coolant level

The coolant level could drop depending on the equipment because the mixed air is expelled in about 5 minutes after the engine started. Let engine cool before removing radiator cap.

Stop the engine, remove radiator cap, and add coolant.

WARNING: Hot steam will rush out and you could get burnt, if the radiator cap is removed when the engine is hot. Allow engine to cool before removing radiator cap.
Cover the radiator cap with a thick cloth and loosen the cap slowly to reduce the pressure, then remove the cap.

6.4 Precautions During Engine Operation

During engine operation, always pay attention to the following items if the engine indicates any sign of abnormalities.

(1) Engine Oil Pressure

1. When the engine is warmed up at the specified speed, and the oil warning lamp is off, the oil pressure is normal.
2. When the oil warning lamp is flashing with the increased engine speed, stop the engine immediately and check the engine oil level or for an oil leak.
   If the engine oil level is within proper operating range and no leaks are found contact your local Authorized Hustler Turf dealer/service shop.

Downloaded from www.Manualslib.com manuals search engine

(2) Coolant Temperature

The engine performance is adversely affected if engine coolant temperature is too hot or too cold.

The normal coolant temperature is 75 to 90°C (167 to 194°F).

Overheating

WARNING: If the Engine Coolant Temperature Gage shows an overheat condition or you have other reason to suspect the engine may be overheating, continued operation of the engine (other than as spelled out here) even for a short period of time may result in a fire and the risk of personal injury and severe equipment damage.

If you see or hear escaping steam or have other reason to suspect there is a serious overheat condition, stop and park the equipment as soon as it is safe to do so and then turn off the engine immediately and get out of the equipment.

The engine cooling system may overheat if the engine coolant level is too low, if there is a sudden loss of engine coolant (such as hose splitting), or if other problems occur. It may also temporarily overheat during severe operating condition such as:

1. Climbing a long hill on a hot day.
2. Stopping after high rpm.

If the Engine Coolant Temperature Gage shows an overheat condition, or you have reason to suspect the engine may be overheating, take the following steps:

1. If your air conditioner (if equipped) is on, turn it off. And turn on the heater.
2. Don't turn off your engine.
3. With the transmission in Neutral, increase the engine speed to about one-half full operating speed or 1200 RPM, maximum. Bring the idle speed back to normal after five minutes.

If the engine coolant temperature does not start to drop within a minute or two:

4. Let the engine run at normal idle speed for two or three minutes. If the engine coolant temperature does not start to drop, turn off the engine and get out of the equipment then proceed as follows:

WARNING: To help avoid being burned -
1. Do not open the engine access cover if you see or hear steam or engine coolant escaping from the engine compartment. Wait until no steam or engine coolant can be seen or heard before opening the engine cover.
2. Do not remove the radiator cap or engine coolant reserve tank cap if the engine coolant in the tank is boiling. Also do not remove the radiator cap while the engine and radiator are still hot. Scalding fluid and steam can be blown out under pressure if either cap is taken off too soon.

If no steam or engine coolant can be seen or heard, open the engine access cover. If the engine coolant is boiling, wait until it stops before proceeding. Look at the see-through reserve tank. The engine coolant level should be between the "MAX" and "MIN" marks on the reserve tank. If necessary, pour engine coolant into the reserve tank only, never directly into the radiator. Also, do not check engine coolant level at the radiator.

Make sure the fan belts are not broken, or off the pulleys, and that the fan turns when the engine is started.

If the engine coolant level in the reserve tank is low, look for leaks at the radiator hoses and connections, heater hoses and connections, radiator, and water pump. If you find major leaks, or spot other problems that may have caused the engine to overheat, do not run the engine until these problems have been corrected. If you do not find a leak or other problem, carefully add engine coolant to the reserve tank. (Engine coolant is a mixture of ethylene glycol antifreeze and water. See "Engine Care in cold season" in Section 8 for the proper antifreeze and water mixture.)

WARNING: To help avoid being burned, do not spill antifreeze or engine coolant on the exhaust system or hot engine parts. Under some conditions the ethylene glycol in engine coolant is combustible.

If the engine coolant level in the reserve tank is at the correct level but there is still an indication on the instrument panel of an overheat condition:

You must let the engine cool first. You may then add engine coolant directly to the radiator.

Once the Engine Coolant Temperature Gauge no longer indicates an overheat condition, you can resume operating at a reduced speed. Return to normal operating after about ten minutes if the gage pointer does not again show an overheat condition.

If no cause for the overheat condition was found, see a qualified service technician.

Overcooling

The engine operation at low coolant temperature will not only increase the oil and fuel consumption but also will lead to premature parts wear which may result in engine failure.

(3) Engine Hour meter (Engine Operation Hour Indicating) (If so equipped)

This meter indicates the engine operation hours. Make sure that the meter is always working during engine operation.

Periodic engine maintenance is scheduled based on operating hours indicated on the hourmeter.

(4) Liquid and Exhaust Leakages

Check for lubricant, fuel, coolant and exhaust leaks.

Downloaded from www.Manualslib.com manuals search engine

https://truckmanualshub.com/

(5) Abnormal Engine Noise

Pay attention to the noise from the engine or other related parts, confirming normal operating noise.

(6) Check the Exhaust Color

Check exhaust color as listed in Section 6.3(2)3.

(7) Electrical System

Don't turn the key to the “OFF” position while engine is under load or at full rpm. This may cause electrical parts damage. See Section 6.5.

6.5 Engine Stopping

1. Make sure that all of the control levers on the equipment are in NEUTRAL position.
2. Before stopping the engine, cool down the engine by operating it at low idle speed about three minutes.
   With the engine at low idle, check the engine noise and the engine oil pressure for abnormalities.
   In the turbocharged engine, if the engine is stopped instantaneously, a dry condition produced by high temperature will take place in the turbocharger rotating parts which may cause lack of lubrication. This will result in turbocharger failure.
3. Turn the starter key switch to the “OFF” position.

CAUTION: Leaving the starter key switch in the “RUN” position for a long period of time after the engine has been stopped, will discharge the battery.

6.6 Run-In (Break-In) For New Engines

Your Shibaura engine is carefully tested and adjusted in the factory, however, further, thorough run-in (i.e. break-in) operation is necessary.

Operating a new engine under extreme loads and/or high RPM’s, reduces lubrication, resulting in abnormal wear or engine seizure. Avoid operating the engine under these conditions for the first 100 hours. Observe the following procedures on new engines:

1. Warm up the engine to operating temperature. During this time do not race the engine.
2. Also do not operate the engine with rapid acceleration, rapid machine starting and continuous high speed operation.

6.7 Engine Over-Cooling (Below Normal Operating Temperature)

Engine over-cooling can cause premature wear and increased fuel consumption. When the coolant temperature does not reach 75 to 90°C (167 to 194°F) indefinitely, partially block the radiator to attain the proper operating temperature.

6.8 Starting the Engine After Being Left Unused For A Long Period of Time

When the equipment is left unused for "more than three months" without running the engine, conduct a thorough inspection of the vehicle before starting the engine.

After starting the engine, be sure to warm it up for more than ten minutes at idling.

7. Periodic Inspection and Maintenance

7.1 LUBRICATING SYSTEM

Servicing of the engine oil or the oil filter element will affect the engine performance as well as the engine life.

Change the engine oil and the oil filter element periodically with Shibaura or equivalent filter and oil of correct grade and viscosity. (Refer to 5.2 Lubricant on page 9.)

(1) Engine Oil and Oil Filter Element Change

Always change the oil filter when changing the engine oil. Follow the change schedule shown below.

Change interval

Engine Oil
- Initial 50 hours . . . . . All Models
- **Every 100** operating hours . . . . . **All Models**

Oil Filter Element
- Initial 50 hours . . . . . All Models
- **Every 200** operating hours . . . . . **All Models**

WARNING: To help avoid being burned, do not drain oil while the engine is still hot.

1. Clean the area around the oil filler cap. Remove the filler cap.
2. Remove the oil pan drain plug and drain the engine oil completely.
   It is advisable that draining be done while the engine is warm, to minimize the draining time.

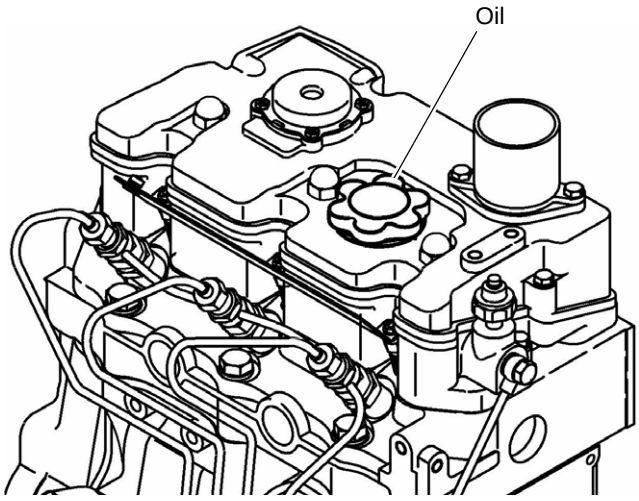

Downloaded from www.Manualslib.com manuals search engine

CAUTION: Drain the used engine oil into an approved oil container. Dispose of used oil properly.

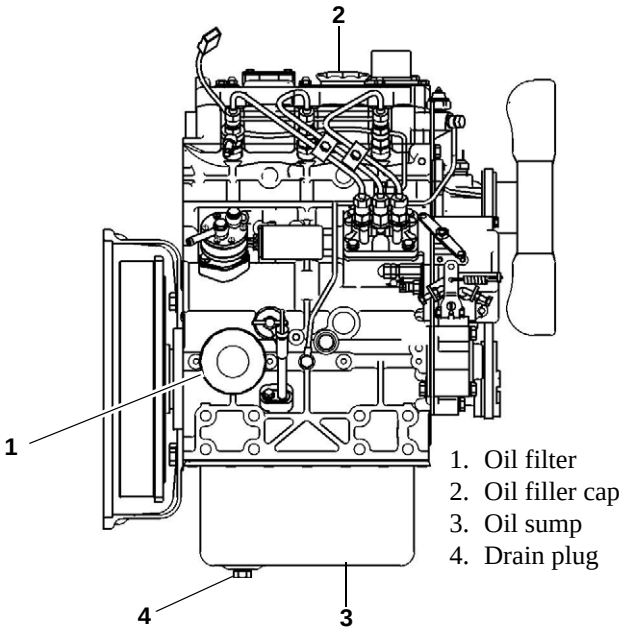

Oil filter element removal

Use a filter wrench to remove the cartridge type oil filter.

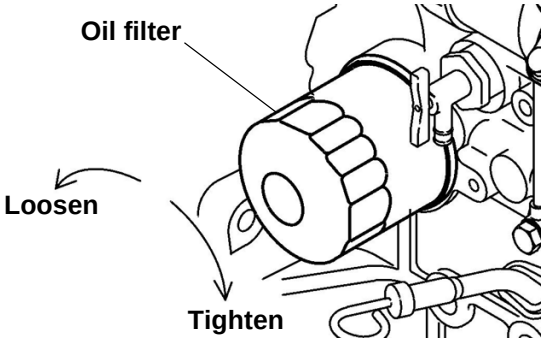

Oil filter element installation

1. Apply light coat of engine oil to the O-ring.
2. Turn in new cartridge until its sealed face comes in contact with the O-ring.
3. Use a filter wrench to tighten the cartridge another 3/4 of a turn.

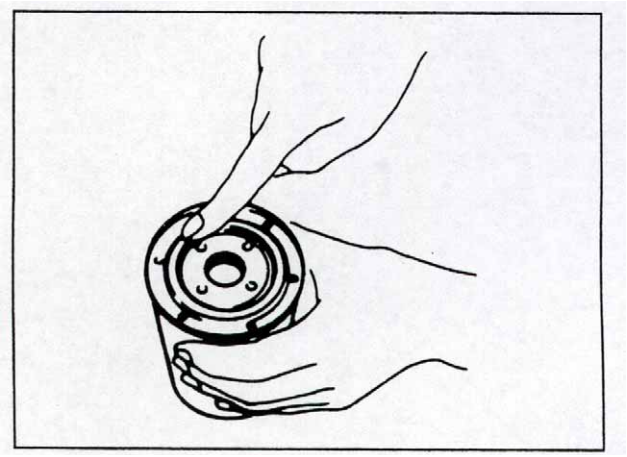

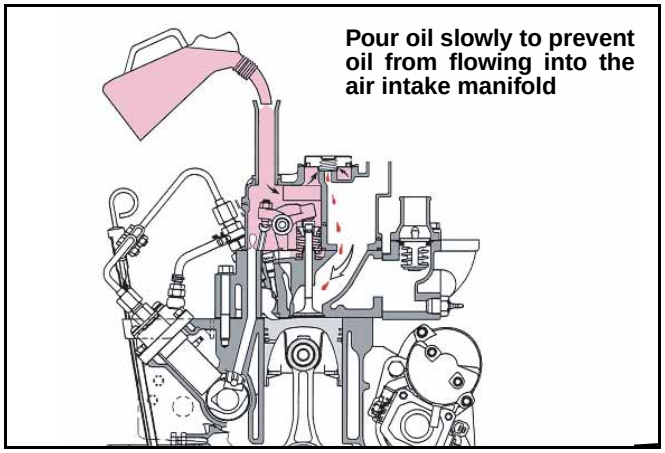

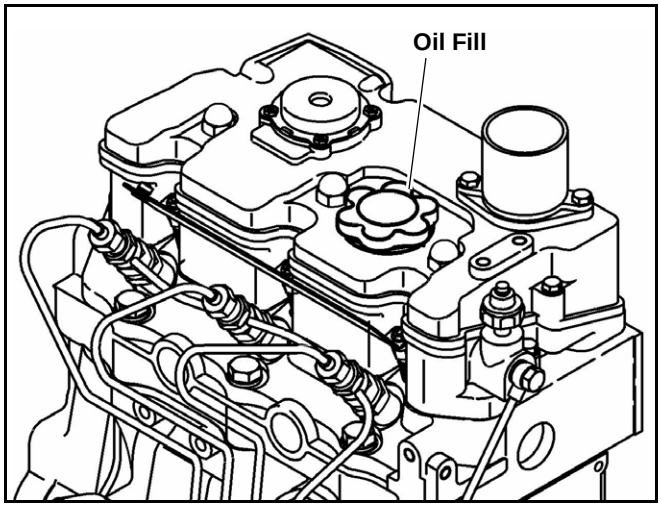

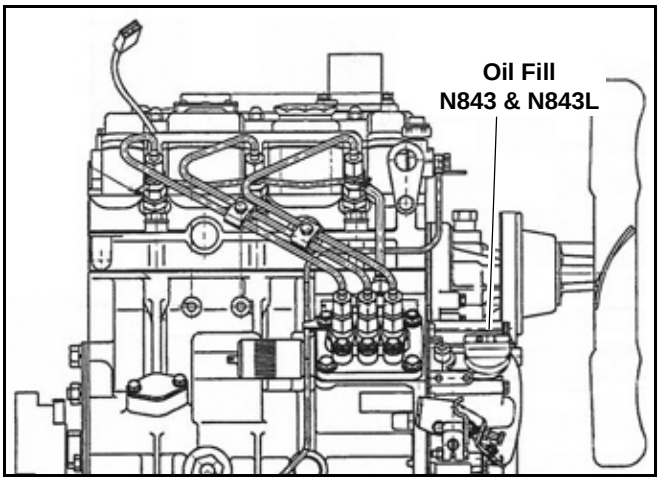

Engine oil refilling

1. Reinstall the drain plugs. Remove the oil dipstick from the engine to allow air to escape.
2. **MODELS E673L, S773L, N844L, N844L-T ONLY** Add engine oil slowly. Pouring the oil too quickly can result in the oil overflowing into the air breather valve and then into the air intake manifold. Cranking the engine with oil in the manifold will severely damage the engine.

   NOTE: If oil has entered the air intake manifold it will be necessary to clean the oil from the cylinders. To clean the cylinders, remove the fuel injection nozzles and turning the engine with the starter until all oil is exhausted.

Downloaded from www.Manualslib.com manuals search engine

When changing the engine oil, add the exact amount specified in the engine owner's manual.

NOTE: Use CD grade or better by API classification engine oil.

MODELS N843 & N843L ONLY — Add oil at the oil fill shown.

When changing the engine oil, add the exact amount specified in the engine owner's manual.

Use CD grade or better by API classification engine oil.

3. Wait about fifteen minutes until the oil gets down to the oil pan. Then check the oil level with a dipstick. A certain period of time is required before the engine oil completely flows down from the oil filler to the crankcase.

(2) Check For Oil Leaks

Idle the engine to raise the oil pressure, then check for oil leakage.

Oil level recheck

1. Stop the engine and allow the oil to drain to bottom (approx. 20 minutes).
2. Use the dipstick to recheck the oil level.
3. Add engine oil, if necessary, to bring level to maximum level.

CAUTION: When the engine is started, the oil level will slightly drop from the initial level as the oil fills into the entire oil circuit.

(3) Engine Oil Additives

Engine oils contain a variety of additives. Your engine should not need any extra additives if you use the recommended oil quality and change intervals.

(4) Used Oil Disposal

Do not dispose of used engine oil (or any other oil) in a careless manner such as pouring it on the ground, into sewers, or into streams or bodies of water. Instead, recycle it by taking it to a used oil collection facility which may be found in your community. If you have a problem disposing of your used oil, it is suggested that you contact your dealer or service station. (This also applies to diesel fuel which is contaminated with water. See "Diesel Fuel" in Section 1.)

(5) Used Engine Oil

WARNING: Used engine oil contains harmful contaminants that have caused skin cancer in laboratory animals. Avoid prolonged skin contact. Clean skin and nails thoroughly using soap and water - not mineral oil, fuels, or solvents. Launder or discard clothing, shoes, or rags containing used engine oil.

Discard used engine oil and other oil properly.

7.2 Cooling System

(1) Fan Belt Tension Adjustment

Adjust fan belt tension when belt becomes loose and when the belts are replaced. (Refer to Belt Tension section below)

WARNING: To help avoid injury, check and adjust fan belt tension with engine stopped.

Belt tension

Belt tension is normal when it is depressed 5 mm (0.197 in) with the thumb at the midway between the fan pulley and alternator pulley. (about 50 N (11 lb) depressing force.)

Fan belt slackness : **About 5 mm (0.197 in)**

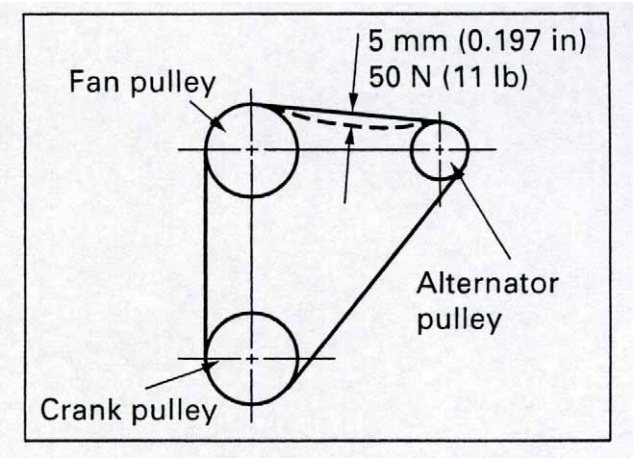

Adjusting procedure

Belt tension adjustment is made by pivoting the alternator at the alternator mounting bolt.

1. Loosen the alternator adjusting plate bolt and the alternator mounting bolt.
2. Pivot the alternator at the mounting bolt toward the engine left or right hand side as required.
3. Tighten the mounting bolt and the adjusting bolt.

CAUTION: Belt tension may vary slightly after the alternator is tightened. Therefore, recheck the belt tension after tightening the bolts.

4. After the adjustment, operate the engine about five minutes at a low idle speed, stop engine and recheck the belt tension particularly when installing new belts. Belt tension may vary due to the initial belt seating.

(2) Fan Belt Change

Use of a low quality fan belt will result in premature belt wear or belt elongation leading to engine damage such as overheating. Therefore use of Shibaura genuine fan belt is highly recommended.

Downloaded from www.Manualslib.com manuals search engine

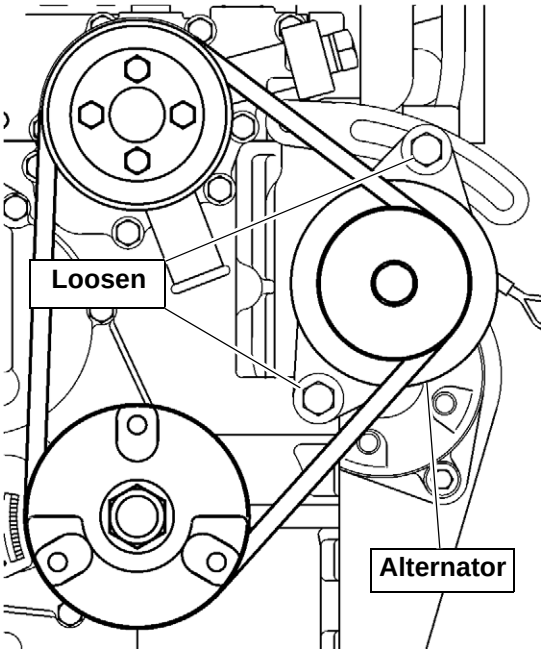

(3) Coolant Change

The coolant must be changed at intervals of 6 months.
Degraded or dirty coolant will lead to engine overheating.

Coolant draining

1. Remove the radiator cap.
   Open the drain cock at the radiator lower part to drain the coolant from the radiator.

   WARNING: Never remove the radiator filler cap while the engine is still hot.
   Allow the engine to cool before removing the radiator cap.
   Cover the cap with a cloth, then turn it slowly to release the internal pressure.

2. Drain the coolant from the engine by loosening the water drain cock on the right hand of cylinder body.

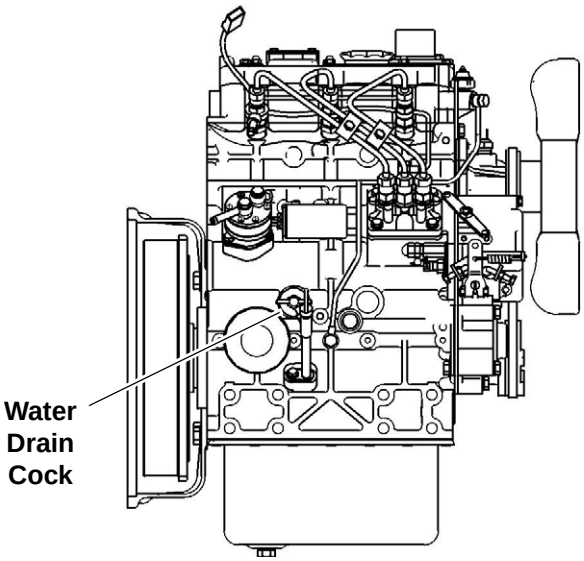

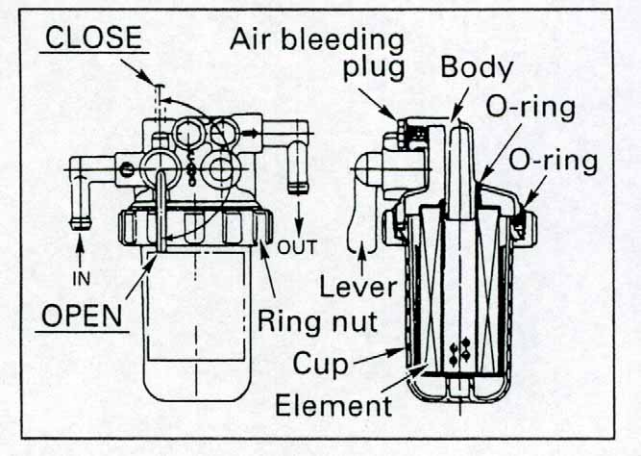

Filling with coolant

1. Close or tighten the coolant drain plug.
   Using a 50/50 mixture of Ethylene Glycol and water (Refer to section 8.2) fill the radiator with the coolant until the level comes up to the filler port neck.
2. Fill gradually to prevent air entry.
   Coolant volume (Engine only) :
   Refer to "Main Data Specifications"
3. After filling operate the engine about five minutes at a low idle speed to purge the air from the system. The coolant level will drop.
   Stop the engine and refill with the coolant.

(4) Cleaning Outside of Radiator

Mud or dried grass caught between radiator fins will block the air flow, resulting in lower cooling efficiency.

Clean the radiator fins with compressed air.

For the cleaning interval, refer to the instruction manual prepared by the equipment manufacturer.

If the fins are clogged, however, clean them at any time. If the fins are deformed, repair or replace the radiator.

(5) Cooling System Circuit Cleaning

When the cooling system is fouled with water scale or sludge particles, cooling efficiency will be reduced.

Periodically flush the system with a cleaner.

Cooling system cleaning interval; **Every 12 months.**

7.3 Fuel System

The fuel injection pump and fuel injection nozzles are precisely manufactured, and therefore, using fuel which contains water or dust particles will result in either injection pump plunger seizure or injection nozzle seizure. A fouled fuel filter element will lead to decreased engine output.

Perform inspection and maintenance periodically as follows:

(1) Removal of Water from the Fuel

If the water reaches the fuel filter element bottom, follow the procedure below to drain the water.

NOTE: Does not apply to Hustler Diesel Z equipment.

Downloaded from www.Manualslib.com manuals search engine

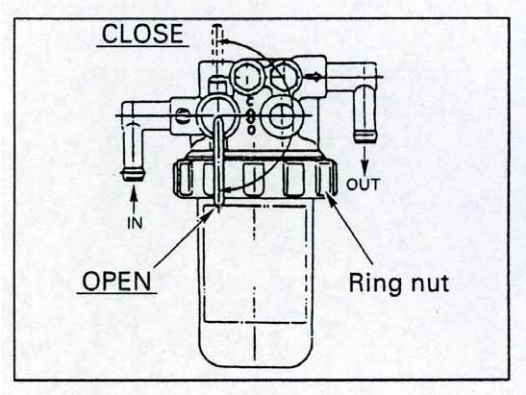

Procedure:

1. Turn the fuel lever to the closed position until it stops to shut off the fuel.
2. Loosen the ring nut, remove the cup together with the element, and drain the fuel.
3. Clean the cup, install the element and tighten to the filter body with the ring nut.
4. Turn the fuel filter lever to the open position until it stops.

CAUTION:
1) If the cup is removed without turning the fuel filter lever just above, the fuel may flow out.
2) The cartridge and cup contain fuel. Take care not to spill it during disassembly.
3) Perform fuel system air bleeding after the water in the fuel is drained.

(2) Fuel System Air Bleeding

NOTE: Does not apply to Hustler Diesel Z equipment.

The entry of air into the fuel system will cause hard engine starting or engine malfunction.

After servicing the fuel system; such as emptying the fuel tank, fuel system water removal, and the fuel filter element change, be sure to bleed the air from the system.

Because of the "automatic air-bleeding system" being employed, turn the starter switch to the "RUN" position and activate the "electromagnetic pump" to bleed the air.

Air bleeding procedure:

1. When the "starter switch" is set to the "Drive" (ON) position to activate the electromagnetic pump, fuel is forcibly sent to the fuel valve of the injection pump and further to the leak-off pipe of each nozzle holder, where air in the fuel leaks off automatically to the fuel tank.
2. Start the engine and check the fuel system for fuel entering the tank.

(3) Fuel Filter Element Change

Change interval

Fuel filter element change interval : **Every 200** operating hours or every season.

Change procedure

1. Turn the fuel filter lever to the closed position.

CAUTION: If the cup is removed without turning the lever as instructed, the fuel may flow out.

2. Loosen the ring nut, remove the cup, and take out the element.
3. Clean the cup, install a new element, and install new packing on the ring nut.
4. Tighten the cup to the body securely with the ring nut.
5. After installation, turn the fuel filter lever to the open position.

WARNING:
1. With the fuel lever in the “OFF” position, the engine cannot be started.
2. Be careful not to spill fuel on surrounding areas when removing the fuel cap.
3. After changing the fuel filter element bleed the air from the system.

(4) Governor Control Seals

As the governor (timing gear case) is precisely adjusted, most of the controls are sealed, please do not break them.

CAUTION: The warranty of the engine can be affected if the tamper proof seals on the cylinder block in back of the timing gear case are broken during the warranty period by a person who is not authorized by the manufacturer.

7.4 Air Intake System

(1) Air Cleaner

Engine performance and life vary with the air intake conditions. A dirty air cleaner element reduces the amount of intake air, causing reduced engine output and/or a poor running engine.

Also, a damaged element leads to wear of cylinders and valves, resulting in increased oil consumption, reduced output and shortened engine life.

Replace the air cleaner element annually or if the air restriction indicator shows that the element needs replaced.

CAUTION:
1. Change the element, if element damage is found.
2. Make sure the air filter seals when reassembling the air cleaner.

7.5 Engine Electrical

The Shibaura engine uses a 12 volt system and a negative grounding type for the electrical system.

(1) Battery Servicing

Battery maintenance schedules will vary with equipment and battery types.

Follow the equipment manufacturer's instructions.

Downloaded from www.Manualslib.com manuals search engine

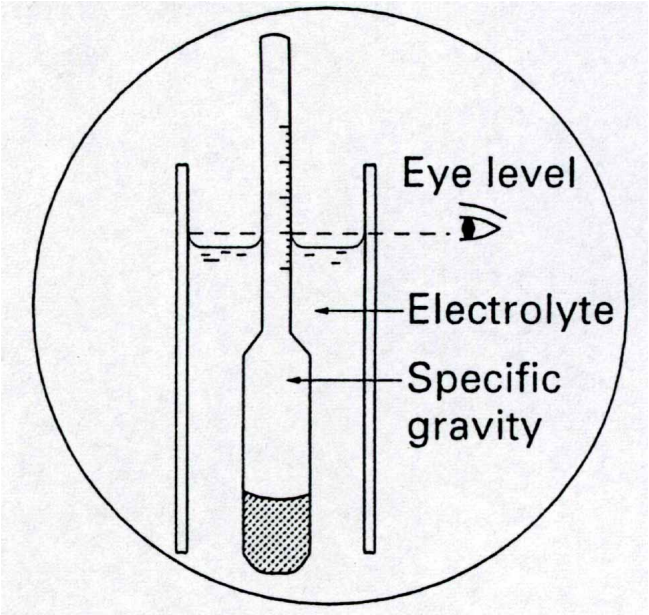

Specific gravity of the batteries

The battery charge condition is judged by the electrolyte specific gravity measurement.

Periodically measure the electrolyte gravity of the batteries.

For the internal check follow the equipment manufacturer's standard.

The relationship between the electrolyte specific gravity and the battery conditions are as follows:

Electrolyte Specific Gravity	Battery Conditions
Over 1.300	Over 100% (Over charged)
1.290 - 1.270	100%
1.260 - 1.240	75%
Below 1.230	Below 50% (Insufficiently charged)

CAUTION: The battery electrolyte is sulfuric acid. Prevent contact of electrolyte with skin and clothes. If this occurs rinse affected area in clean water.

Specific Gravity Conversion

The specified electrolyte temperature for the gravity measurement is 20°C (68°F).

Measure the electrolyte temperature and use the following formula for conversion.

S20 = St + 0.0007 (t - 20)
S20 ; gravity at 20°
St ; gravity measured
t ; electrolyte temperature when measured

Battery Terminal Connections

Periodically, check the battery terminals for loose connection and corrosion.

Follow the equipment manufacturer's recommendation for intervals.

Loose connections will cause hard engine starting or insufficient battery charging.

If the terminals are excessively corroded, disconnect the battery cables and polish them with a wire brush or sandpaper.

Never reverse the "+" and "-" terminals when reconnecting the cables. Even a short period of reverse connection could damage the electrical system.

Cleaning of Battery

Clean the battery with clean water or tepid water and wipe them with a dry cloth to remove the water.

Apply a light coat of petroleum jelly or grease to the battery post.

(2) Alternator Servicing

1. The polarity of the alternator is negative grounding type. When an inverted circuit connection takes place, the circuit will be in short circuit instantaneously resulting in alternator failure.
2. Do not put water directly on the alternator. Entry of water into the alternator leads to electrolyte corrosion causing an alternator failure.
   Use caution when cleaning the engine.
3. Disconnect the battery prior to charging with an external charger.

(3) Wiring Connections

Check all of the electrical wiring for loose connections and damage.

7.6 Engine Assembly and Others

For continued trouble free engine operation over a long period of time, the servicing items need a skilled maintenance technician, therefore, consult your dealer on the following procedures.

(1) Fuel Injection Nozzle

Use an injection nozzle tester check the static injection starting pressure and the fuel spray conditions.

Injection nozzle pressure test interval : **Every 1000 operation hours.**

When the injection starting pressure is too high or too low or the fuel spray pattern is improper, an abnormal fuel combustion takes place in the engine leading to lowered output and blackish exhaust smoke. Further, it can cause a piston seizure or damage etc. In such cases, the injection nozzle test or the nozzle replacement is required.

Injection starting pressure …… Refer to the main data and specifications.

WARNING: When using a nozzle tester, keep clear of nozzle end. Fuel oil under high pressure can cause serious injury

Downloaded from www.Manualslib.com manuals search engine

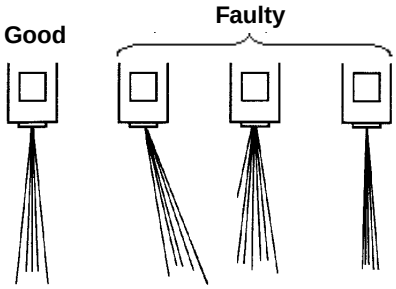

(2) Valve Clearance Adjustment

The valve clearance must be adjusted every 1000 operating hours, or whenever the valve rocker is abnormally noisy, or if there is an engine malfunction and the fuel system is working properly.

Valve clearance : 0.20 mm (0.008 in) (When the engine is cold.)

Adjustment Procedure

1. Bring No. 1 cylinder to the top dead center in the compression stroke by aligning the top mark of the crank pulley with top mark of the timing gear case.
2. Remove the cylinder cover and turn the crankshaft in the forward and backward directions.
   If the inlet and exhaust valves of No. 1 cylinder do not move at this time, No. 1 cylinder is at the top dead center. When the valves move, give another full turn to the crankshaft and align the top mark of the crank pulley with the TOP mark of the timing gear case.

Model:E673L, N843, N843L

3) Using the table below reference position of #1 piston and adjust as necessary, measure and adjust the clearance of the valves.
4) On completion of the valve clearance adjustment in step 3 above, realign mark as in step 1 above by rotating the crankshaft one complete revolution.
   Then measure and adjust the clearance of the remaining unadjusted valves.

Cylinder No.	1		2		3	
Valve arrangement	I	E	I	E	I	E
When No. 1 cylinder is at TDC in the compression stroke	X	X		X	X	
With the crankshaft rotated 360° in normal direction from above			X			X

I: Inlet E: Exhaust

Model:N844L, N844L-T

3) Using the table below reference position of #1 piston and adjust as necessary, measure and adjust the clearance of the valves.
4) On completion of the valve clearance adjustment in step 3 above, realign mark as in step 1 above by rotating the crankshaft one complete revolution.
   Then measure and adjust the clearance of the other valves.

Cylinder No.	1		2		3		4	
Valve arrangement	I	E	I	E	I	E	I	E
When No. 1 cylinder is at TDC in the compression stroke	X	X	X			X		
With the crankshaft rotated 360° in normal direction from above				X	X		X	X

I: Inlet E: Exhaust

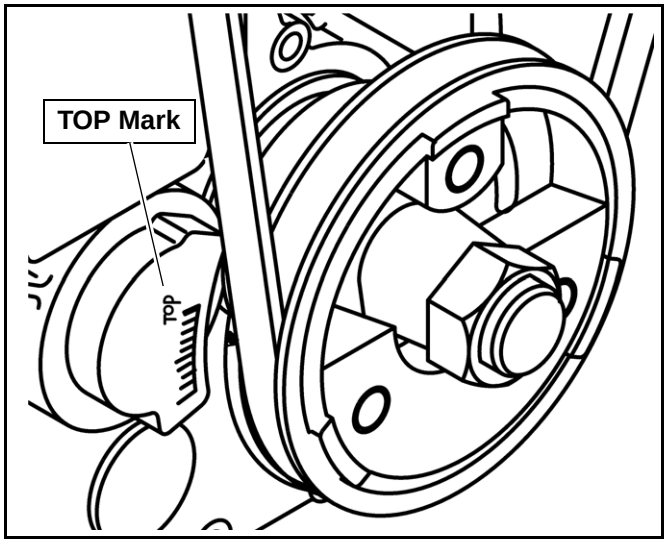

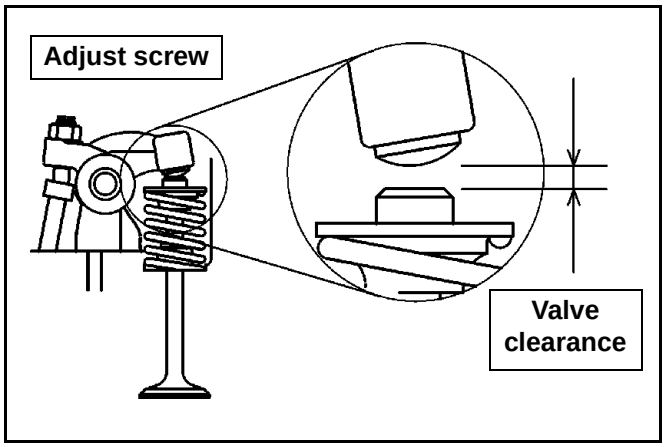

(3) Adjustment of Injection Timing

The injection timing should not be readjusted. Refer to Engine Service Manual.

(4) Cylinder Compression Pressure Measurement

The cylinder compression pressure measurement should be done every 2000 operation hours, or whenever the engine output is reduced.

Compression pressure: 2.94 Mpa (426 psi)
Test condition: Cranking speed 200 rpm
Coolant temperature 75°C (167°F)

Repair the engine and/or replace parts if compression pressure is lower than 2.45 Mpa (355 psi)

Downloaded from www.Manualslib.com manuals search engine

(5) Starter and Alternator Servicing

Service the starter and alternator every 1000 hours of operation. Do the following:

1. Starter commutator cleaning
2. Alternator slip ring cleaning
3. Carbon brushes and the brush contact check

(6) Radiator Pressurization Valve Check

A pressurization valve is incorporated in the radiator cap assembly. Check the valve actuating pressure with a radiator pressure tester. For the pressurization valve actuating pressure and the check interval, follow the equipment manufacturer's standards.

8. Engine Care During Cold Season

8.1 Fuel

(1) Fuel Selection

In the cold zone, the fuel may gel resulting in hard engine starting; therefore, select a suitable fuel for these conditions.

Use ASTM 975 No. 2-D fuel if you expect temperature above - 7°C (20°F).

Use Number 1-D if you expect temperatures below - 7°C (20°F).

If Number 1-D is not available, a "winterized" blend of 1-D and 2-D is available in some areas during the winter months.

Check with the service station operator to be sure you get the properly blended fuel.

8.2 Coolant

Where the atmospheric temperature falls below freezing point, the cooling system should be drained after engine operation, but to eliminate the need for repeated draining and refilling, the use of anti-freeze solution is highly recommended.

A 50/50 Ethylene glycol base antifreeze/water mix.

(which provides protection to -37°C (-34°F) is recommended for use in these Shibaura diesel engines).

Concentrations over 65% adversely affect freeze protection, heat transfer rates, and silicate stability which may cause water pump leakage.

Never exceed a 60/40 antifreeze/water mix.

(which provides protection to about -50°C (-58°F).

WARNING: Under some conditions the ethylene glycol in the engine coolant is combustible. To help avoid being burned when adding engine coolant, do not spill it on the exhaust system or engine parts that may be hot. If there is any question, have this service performed by a qualified technician.

CAUTION:

1. Methyl alcohol base antifreeze is not recommended because of its effect on the non-metallic components of the cooling system and because of its low boiling point.
2. High silicate antifreeze is not recommended because it could cause serious silica gelation problems.
3. Usage and mixing ratio etc. should be followed to the antifreeze manufacture's recommendations.

8.3 Engine Oil

Engine oil viscosity largely affects engine startability, so the use of lubricant with selected viscosity according to the atmospheric temperature is important. (Refer to page 9)

At low atmospheric temperature, engine oil viscosity will increase to cause hard engine starting.

8.4 Battery

1. Make sure batteries are completely charged during cold weather.
   As the discharge current from the battery is more demanding in cold engine starting, it takes a comparatively longer time to recharge the batteries than tit would after normal engine starting.
   An insufficiently charged battery is more susceptible to freezing.
   Pay attention to keep the battery charged during the cold season
2. Check and fill the battery with distilled water before engine operation.
   If done after the engine has already been in an operation, the distilled water will not mix with the original electrolyte, allowing the danger of freezing distilled water remaining in the upper part of the battery cell.

8.5 Engine Starting

When starting the engine, with temperatures of below 0°C (32°F), following these procedures:

1. Do the preheating operation before cranking the engine with the starter.
2. Set the engine throttle lever or pedal to the 1/3 position of the full lever or pedal stroke.
3. If the engine does not start with the initial cranking, wait a while to allow the batteries to recover their power and, reattempt the preheating and the cranking operation.
4. In order to protect the starter, cranking time must be limited to 10 seconds.
5. Rapid and repeated engaging and disengaging of the starter gear with the flywheel ring gear during an attempt to start the engine indicates a low battery charge. Disconnect the battery and charge it.
6. In extreme cold temperature engine starting, crank the engine with the throttle closed and no preheat to prelube the engine (initial engine oil flow). Then open the throttle to 1/3 position and preheat to start.

CAUTION: Do not use starting "aids" in the air intake system. Such aids can cause immediate engine damage.

Downloaded from www.Manualslib.com manuals search engine

9. Engine Maintenance Schedule

When performing the following items, the daily inspection items should also be carried out.

NO	Description of check and Maintenance		Daily	Initial 50	Every 100	Every 200	Every 400	Every 600	Every 1000	Remarks
1	Oil level and condition of oil		X							See ' EXPLANATION OF MAINTENANCE SHEDULE'
2	Oil leakage check		X							
3	Oil pressure warning lamp		X							
4	Engine oil replacement			X	X					
5	Oil filter element replacement			X		X				
6	Fuel leakage check		X							
7	Draining water in fuel filter	w/water sedimentor			X					
8	Fuel filter element replacement					X				
9	Injection nozzle check (*)								X*	
10	Coolant level and condition check		X							
11	Coolant leakage check		X							
12	Radiator filler cap fitting condition		X							
13	Fan belt tension check (Replace if necessary)		X							
14	Overheat warning lamp		X							
15	Coolant replacement		Yearly per Section 7.2 (5)							
16	Radiator external cleaning					X				

* This is a recommended maintenance. The failure to perform this maintenance item will not nullify the emission warranty or limit recall liability prior to the completion engine useful life. Shibaura however, urges that recommended maintenance service is performed at the indicated intervals.

Downloaded from www.Manualslib.com manuals search engine

NO	Description of check and Maintenance		Daily	Initial 50	Every 100	Every 200	Every 400	Every 600	Every 1000	Remarks
17	Cooling system circuit cleaning		Yearly							See ' EXPLANATION OF MAINTENANCE SHEDULE'
18	Radiator filler cap function check (*)				X					
19	Electrolyte level check		X							
20	Battery cleaning		X							
21	Battery charge condition	Charge warning lamp	X							
22	Electrolyte gravity check				X					
23	Starter and alternator check and cleaning(*)							X		
24	Wiring and connection check							X		
25	Preheating condition check		X							
26	Air cleaner element replacement					X				
27	Engine starting conditions and noise conditions		X							
28	Exhaust smoke condition		X							
29	Cylinder compression pressure(*)		Every 2000 hours							
30	Valve clearance check (*)								X	

NOTE:

1. The service intervals after 1000 operation hours should also be made every 100 operation hours in accordance with this check and maintenance schedule.
2. When the servicing on the asterisked (*) items are necessary, consult the equipment supplier.

Explanation of Maintenance Schedule

The following is a brief explanation of the services listed in the preceding Engine Maintenance schedule.

1. Oil level and condition of oil	Check that the oil level is between the max. level mark and the min. level mark. Drain oil to the max. level mark If oil level is above the max. level mark. Add oil to the max. level mark if oil is below the min. level mark.
2. Oil leakage check	Replace any damaged or malfunctioning parts which could cause leakage.
3. Oil pressure warning lamp	Warning lamp is off while engine running. If it stays on, check and repair the lubrication system.
4. Engine oil replacement	Change oil per specified interval.
5. Oil filter element replacement	Change element per specified interval.
6. Fuel leakage check	Inspect the fuel lines for damage which could cause leakage. Replace any damaged or malfunctioning parts.
7. Draining water in fuel filter	Drain the sedimented water in fuel filter every 100 hours.
8. Fuel filter element replacement	Change element every 200 hours.
9. Injection nozzle check	Check and adjust injection opening pressure and spray condition (This is a recommended maintenance) every 1000 hours.
10. Coolant level and condition check	Check coolant level and add coolant if necessary.
11. Coolant leakage check	Repair or replace parts as required.
12. Radiator filler cap fitting condition	The radiator cap must be installed tightly.
13. Fan belt tension check	Check and adjust fan belt tension. Look for cracks, fraying and wear.
14. Overheat warning lamp	Coolant temperature is normal at about 75° to 90°C (167° to 194°F)

Downloaded from www.Manualslib.com manuals search engine

15. Coolant replacement	Use 50/50 anti-freeze and water mixture.
16. Radiator external cleaning	According to the equipment manufacture's specification. (reference: every 500 hours)
17. Cooling system flushing	Flush the cooling system circuit every 2000 hours
18. Radiator filling cap function check	Check radiator pressure cap periodically for proper operation according to the equipment manufacturer's specifications. (reference: every 200 hours)
19. Electrolyte level check	Refill with distilled water if necessary.
20. Battery cleaning	Clean the terminals.
21. Battery charge condition	Indicator type, the lamp should be off while engine running.Check charging circuit if the lamp is not off.
22. Electrolyte gravity check	Check according to the equipment manufacturer's specifications. (reference: every 200 hours)
23. Starter and alternator check and cleaning	Check wear of brush and commutator (every 1000 hours)
24. Wiring and connection check	Check according to the equipment specifications. (reference: every 1000 hours)
25. Preheating condition check	Check preheating condition of the system.
26. Air cleaner element replacement	Change element according to the manufacturer's specifications. (reference: every 200 hours) or per restriction indicator.
27. Engine starting condition and noise condition	Check engine stability and noise.
28. Exhaust smoke condition	Check exhaust smoke color.
29. Cylinder compression pressure	Check every 2000 hours.
30. Valve clearance check	Incorrect valve clearance will result in increased engine noise and lower engine output. Thereby adversely affecting engine performance. Check and adjust every 1000 hours.

10. Simple Engine Troubleshooting

This section contains simple engine troubleshooting guides. Use this guide to troubleshoot engine problems. If problem cannot be diagnosed contact your local Authorized Hustler Turf dealer/service shop.

Downloaded from www.Manualslib.com manuals search engine

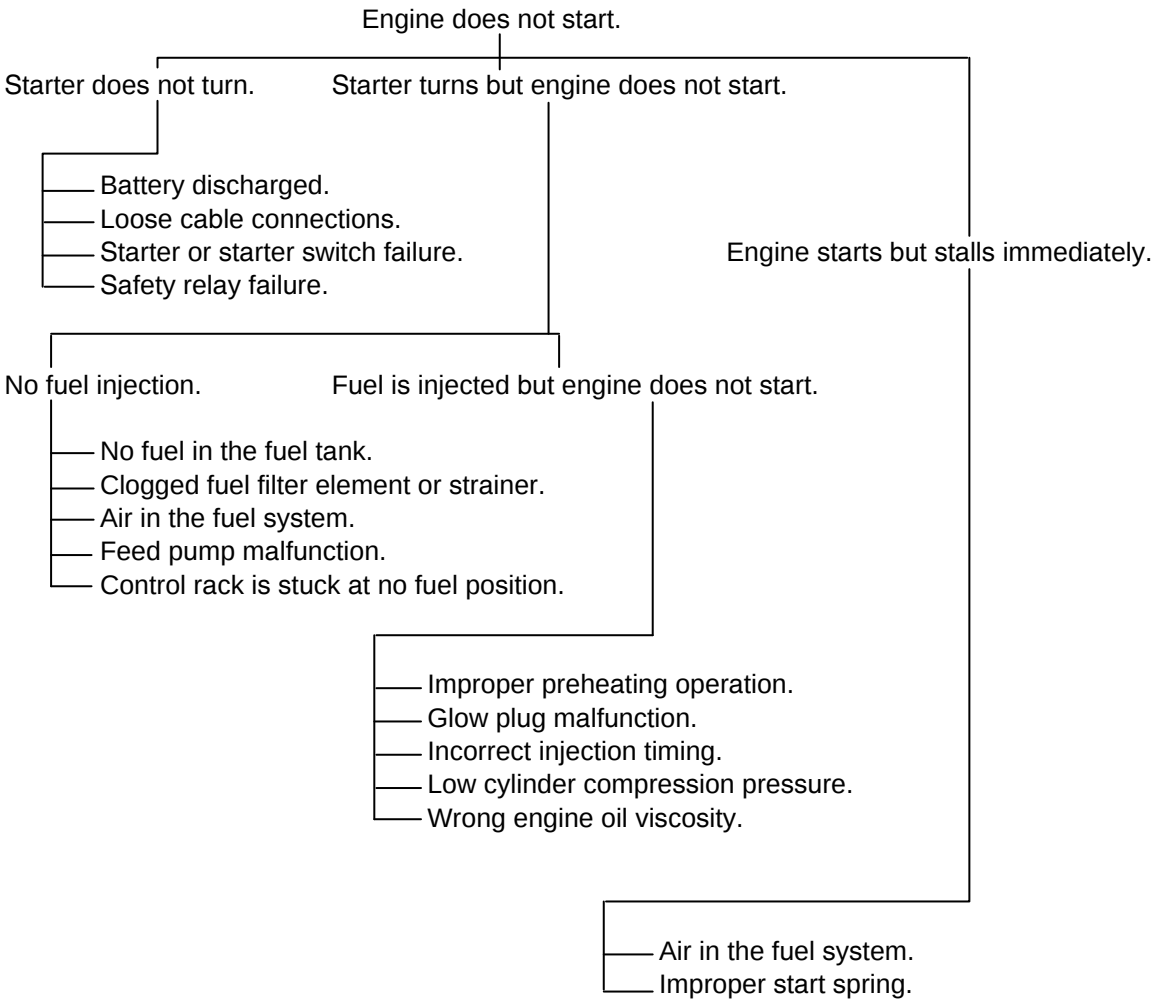

Downloaded from www.Manualslib.com manuals search engine

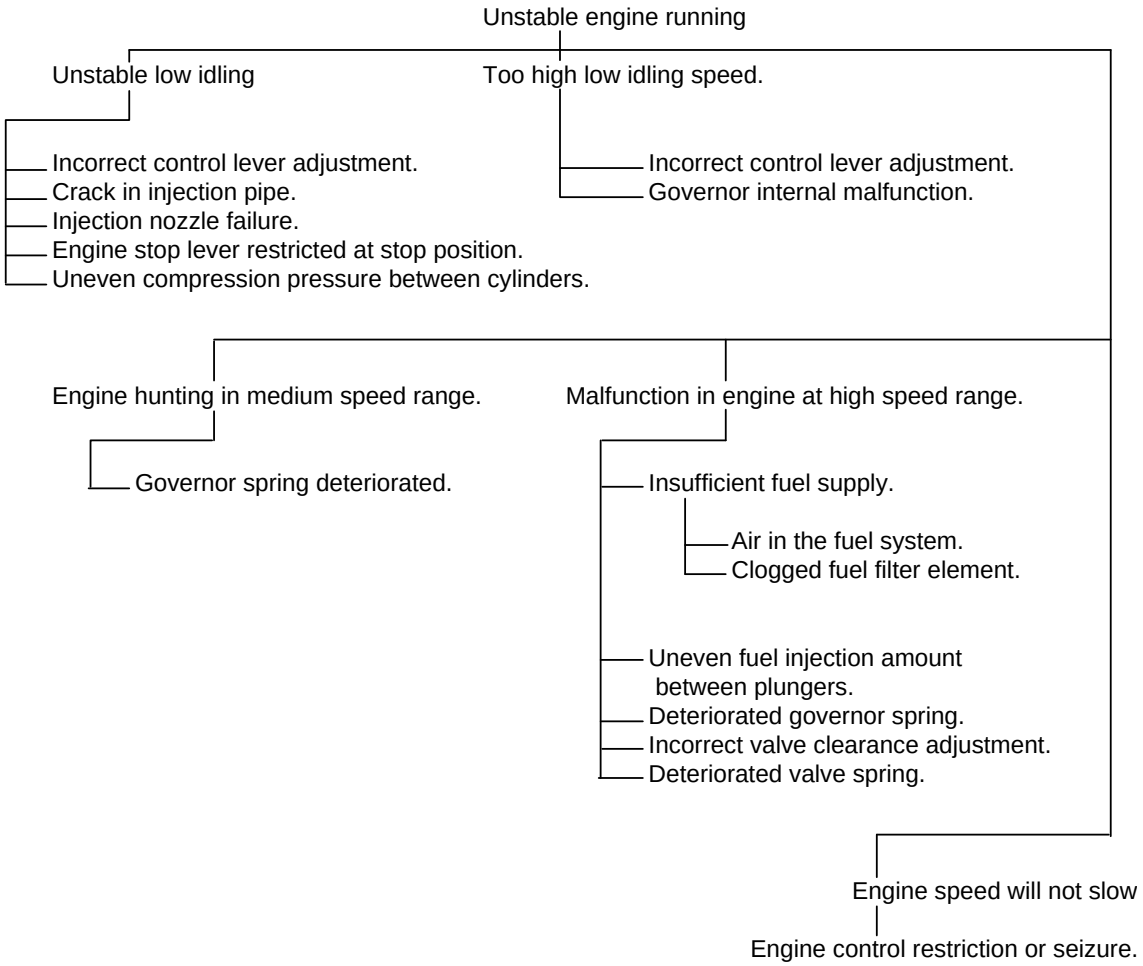

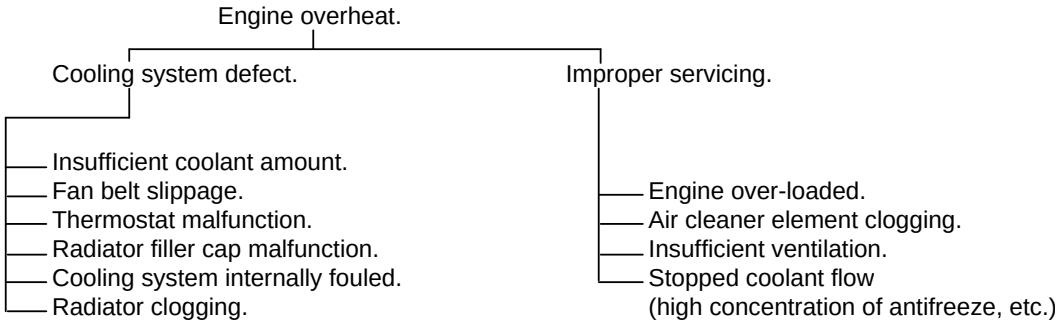

Downloaded from www.Manualslib.com manuals search engine

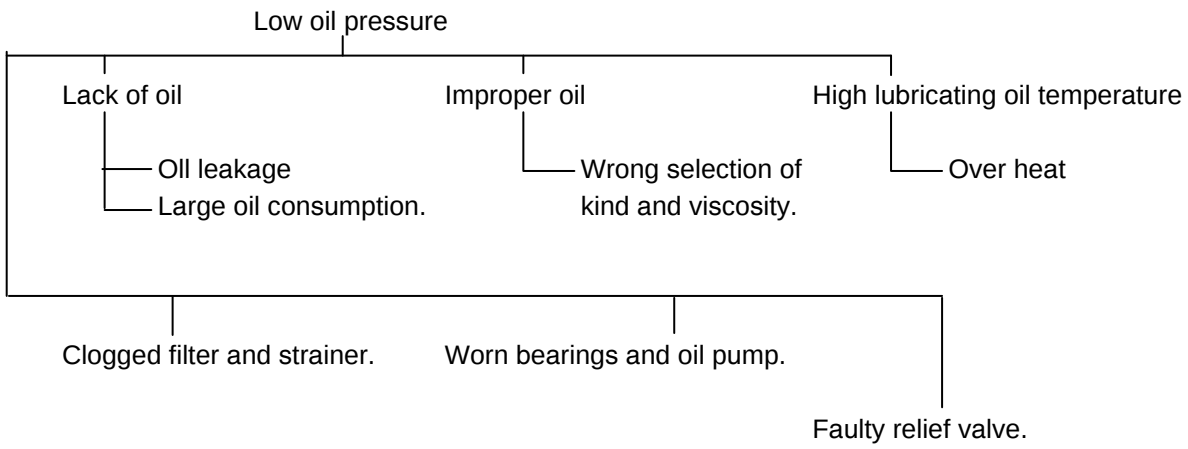

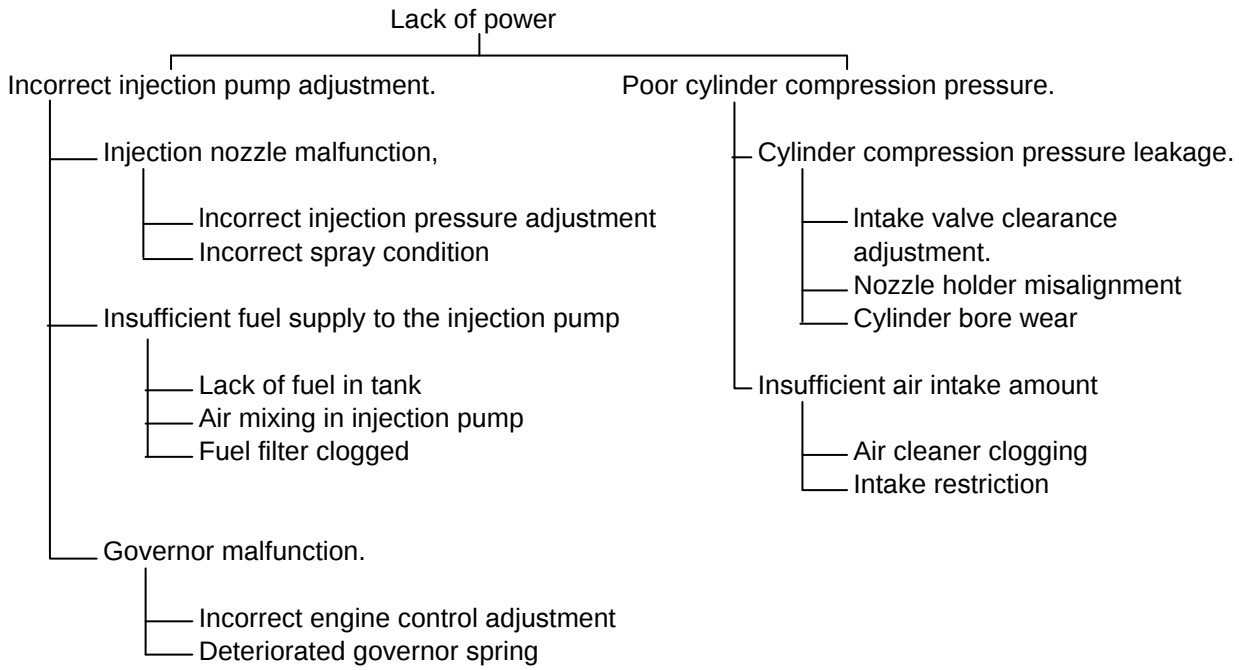

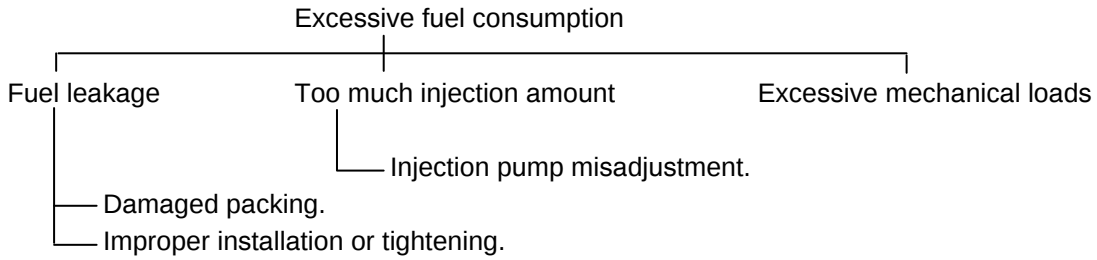

Downloaded from www.Manualslib.com manuals search engine

Condition	Cause	Remedy
Improper color of engine exhaust (white or blue)	Too much engine oil.	Check and adjust the quantity.
	Too low viscosity of engine oil.	Check and change.
	Improper fuel.	Flush & change oil
	Improper injection timing.	See dealer
	Engine oil burning or detonation.	See dealer
Improper engine exhaust (black or dark gray)	Overload.	Reduce the load
	Clogged air cleaner.	Check and change.
	Improper fuel.	Check and change.
	Excessive fuel injection.	See dealer
	Improper function of fuel injection pump.	See dealer
	Clogged fuel filter.	Clean or replacement element
	Improper function of engine main body.	See dealer

Downloaded from www.Manualslib.com manuals search engine

https://truckmanualshub.com/

All information, illustrations and specifications contained in this manual are based on the latest product information available at the time of publication. The right is reserved to make changes at any time without notice.

OPERATION MANUAL (INDUSTRIAL)

E673L
S773L
N843
N843L
N844L
N844L-T

Issued by
IHI Shibaura Machinery Corporation, Ltd.
and
Hustler Turf Equipment

Downloaded from www.Manualslib.com manuals search engine