https://truckmanualshub.com/

CANYCOM

Off-road Rubber Track Carrier

SC45

Operator's Manual

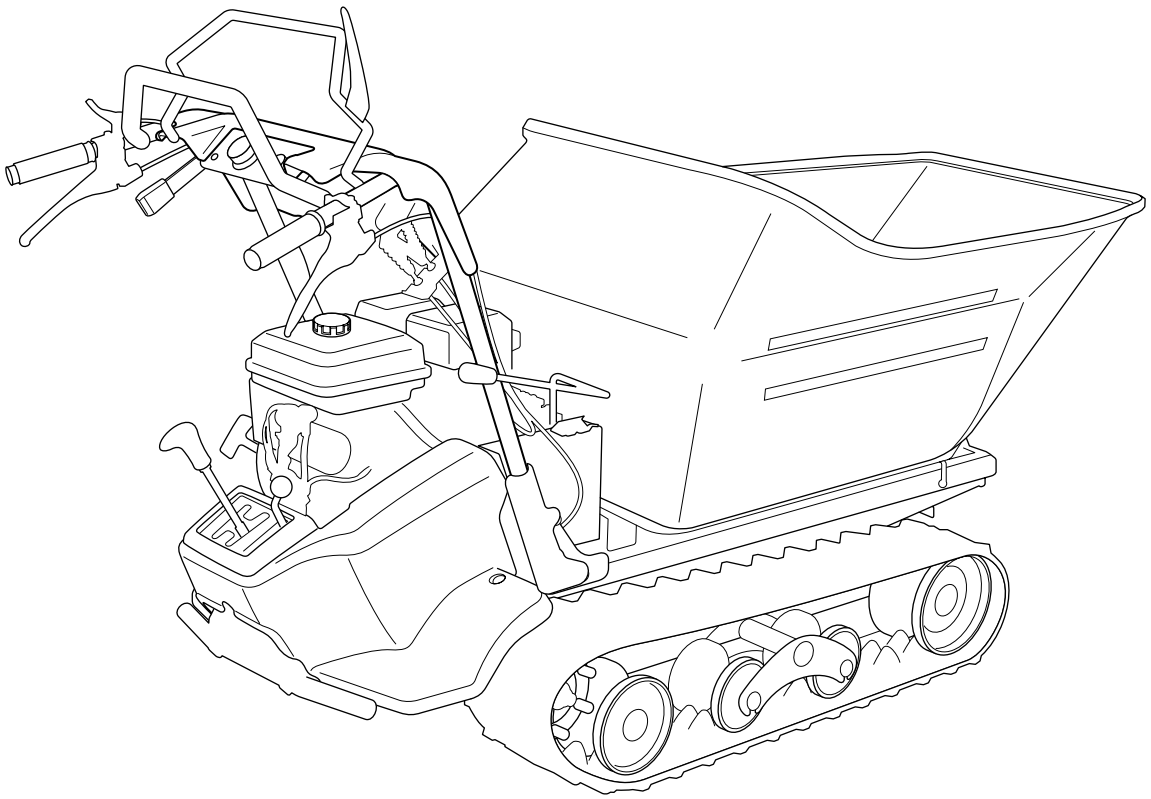

⚠WARNING!

Read this manual completely before operating or maintaining this machine. Failure to follow safety precautions could result in serious injury or death. Keep this manual for future reference by you and by all those who operate and maintain this machine.

3577 6107 000

https://truckmanualshub.com/

CHIKUSUI CANYCOM, INC.

http://www.canycom.jp/

90-1 Fukumasu, Yoshii-machi,
Ukiha-shi, Fukuoka, Japan 839-1396

Sales Headquarters (International) TEL +81-(0)943-75-2195
FAX +81-(0)943-75-4396

Authorized Dealer

All rights reserved. Unauthorized use or reproduction of this material is prohibited.

https://truckmanualshub.com/

Notice to Users and Maintenance Personnel

Thank you for purchasing this machine.
This manual provides information needed for safe and effective use of this machine to those who operate or maintain this machine. Make sure to read and understand this manual thoroughly before operating this product. Also make sure to read the separate operator's manual for the engine.

⚠WARNING!

- **This machine can be very dangerous if the safety precautions in this manual and on labels attached to this machine are not followed. Read and understand this manual and safety labels on machine thoroughly before using this machine. Always follow the instructions and safety precautions, or serious injury or death could result.**

- **This machine should only be used for its intended purpose: hauling and dumping. Any other use could be dangerous.**

- **This machine may not be operated on public road or what is considered to be public road. It is the sole responsibility of the operator to consult the local regulations.**

- **Do not modify this machine, or do not operate this machine with safety covers removed or open. A serious accident could result.**

⚠CAUTION!

- **Store this manual in a safe, accessible place for easy reference.**

https://truckmanualshub.com/

Notice to Owner

⚠CAUTION!

- **Be sure that everyone who uses this machine, including those who rent or lease this machine, receives a copy of this Operator's Manual and understands the importance of reading and following the information in this manual.**

Warning Terms Used in this Manual

In this manual, the following four warning terms are used to signal the four levels of hazard (or seriousness of possible accidents). Read and understand what they mean and always follow the instructions in this manual.

Warning Term	Definition
⚠DANGER!	**Indicates an imminently hazardous situation which will result in death or serious injury if the user does not follow the procedures or the instructions.**
⚠WARNING!	**Indicates a potentially hazardous situation which could result in death or serious injury if the user does not follow the procedures or the instructions.**
⚠CAUTION!	**Indicates a potentially hazardous situation which could result in minor to moderate injury or damage to the machine if the user does not follow the procedures or the instructions.**
NOTE	**Indicates important information which needs particular attention.**

https://truckmanualshub.com/

Warranty and After-Sales Service

Warranty

CHIKUSUI CANYCOM, INC. provides a warranty through your local CANYCOM dealer. A copy of this warranty is attached to the back of this manual.

After-Sales Service

Consult your local CANYCOM dealer or our company's sales department regarding service orders or any questions or problems that may arise when using this machine. Please make sure to have the product name, serial number, and the make and type of engine handy at the time of contact. The model and serial number can be found on the model label as shown below, and the make and type of engine can be found in Chapter 3 **"Specifications"** of this manual (Page11).

Location of Model Label

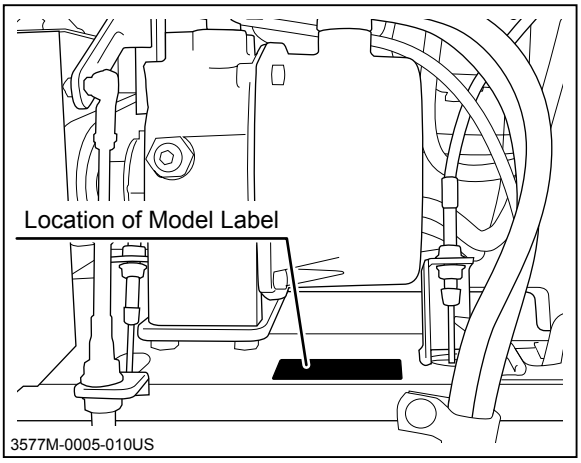

Model Label

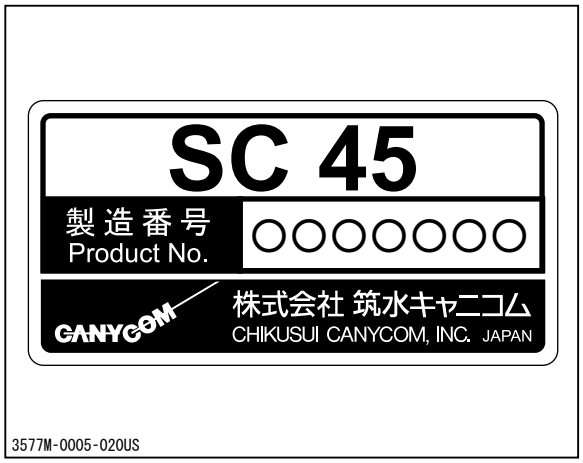

Availability of Spare Parts

The replacement or repair parts for this product shall remain available for nine years after the production of this type of machine is discontinued.

https://truckmanualshub.com/

Emission Control Information

This product meets the applicable emissions and evaporative regulations as required by the United States Environmental Protection Agency or the California Air Resources Board. The relevant information is provided in the label shown below.

Location of Emissions Label

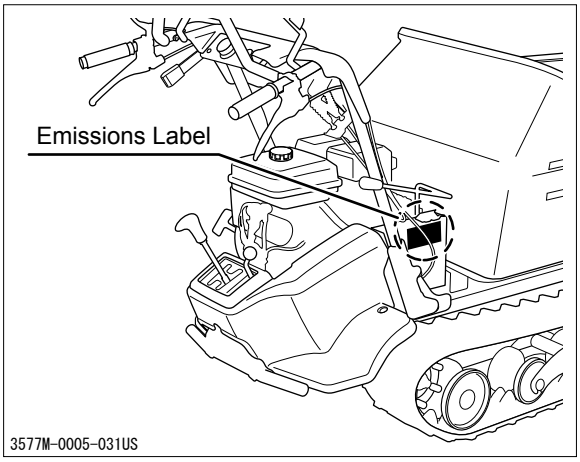

Emissions Label

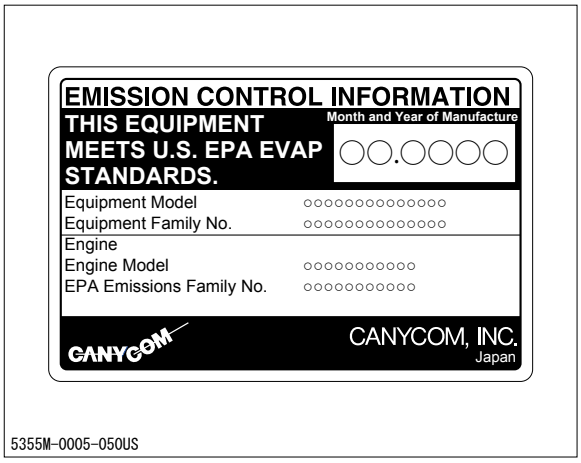

Sample label shown. Emission control information is subject to change each model-year. Please refer to the actual emissions label on the machine for details.

https://truckmanualshub.com/

Contents

1. Safety 1

Safety Labels 1

Safety Precautions 2

Training 2
Preparation 3
Operation 3
Servicing 8

2. Controls and Components 9

Name and Function of Controls 9

3. Specifications 11

Product Specifications 11

Contents of the Tool Bag 13

4. Operation 14

Preparation 14

Pre-start up Inspection 14
Checking and Filling Fuel 14
Adjusting Handle Lever Angle 15

https://truckmanualshub.com/

Driving 16

Starting 16
Driving 19
Stopping 22
Shifting 23
Parking 24

Working 25

Dumping 25
Using Safety Lock Plate 28

5. Maintenance 29

Maintenance Schedule 29

Engine 29
Chassis 30

List of Fluids and Lubricants 32

List of lubricants 33

List of Consumables and Spares 34

Removing and Installing Body Panels 35

Fender 35
Belt Cover 35

Engine 36

Engine Oil 36
Air Cleaner 37
Spark Plug 38
Fuel Filter 38

https://truckmanualshub.com/

Drive Train 39
Track 39
Transmission Oil 40
Drive Belt 41
Parking Brake 42
Side Clutch 43
Lubrication 43
Hydraulic System 44
Hydraulic Package 44
Hydraulics Belt 45
Loading Deck 46
Lubrication 46
After Use Care 47
After Normal Use 47
After Cold Weather Use 47
Storage 48

6. Troubleshooting 49
Troubleshooting 49

7. Transporting 53
Hauling 53
Loading and Unloading 53

https://truckmanualshub.com/

Warranty

Warranty Certificate is attached at the end of this manual.

* Have the warranty certificate signed and sealed after you have received and fully understood the instructions for handling this machine and received the receipt.

Appendix

• Operator's Manual for the Engine

* Be sure to read and understand it together with this manual .

https://truckmanualshub.com/

Safety Labels

The safety labels shown below are attached to the machine. See the illustration for the location and the content of each label on the machine.

- **Locate all the warning labels attached to this machine. Read and follow the instructions and precautions in them. Failure to do so could result in serious injury or death to the operator or bystanders.**

- **Keep the labels clean and legible. Do not use solvents or gasoline to clean the labels.**

- **Replace these labels immediately if they have been removed, have fallen off or become illegible. Use the part number, on the label or shown in this manual, to order a replacement label from your CANYCOM representative.**

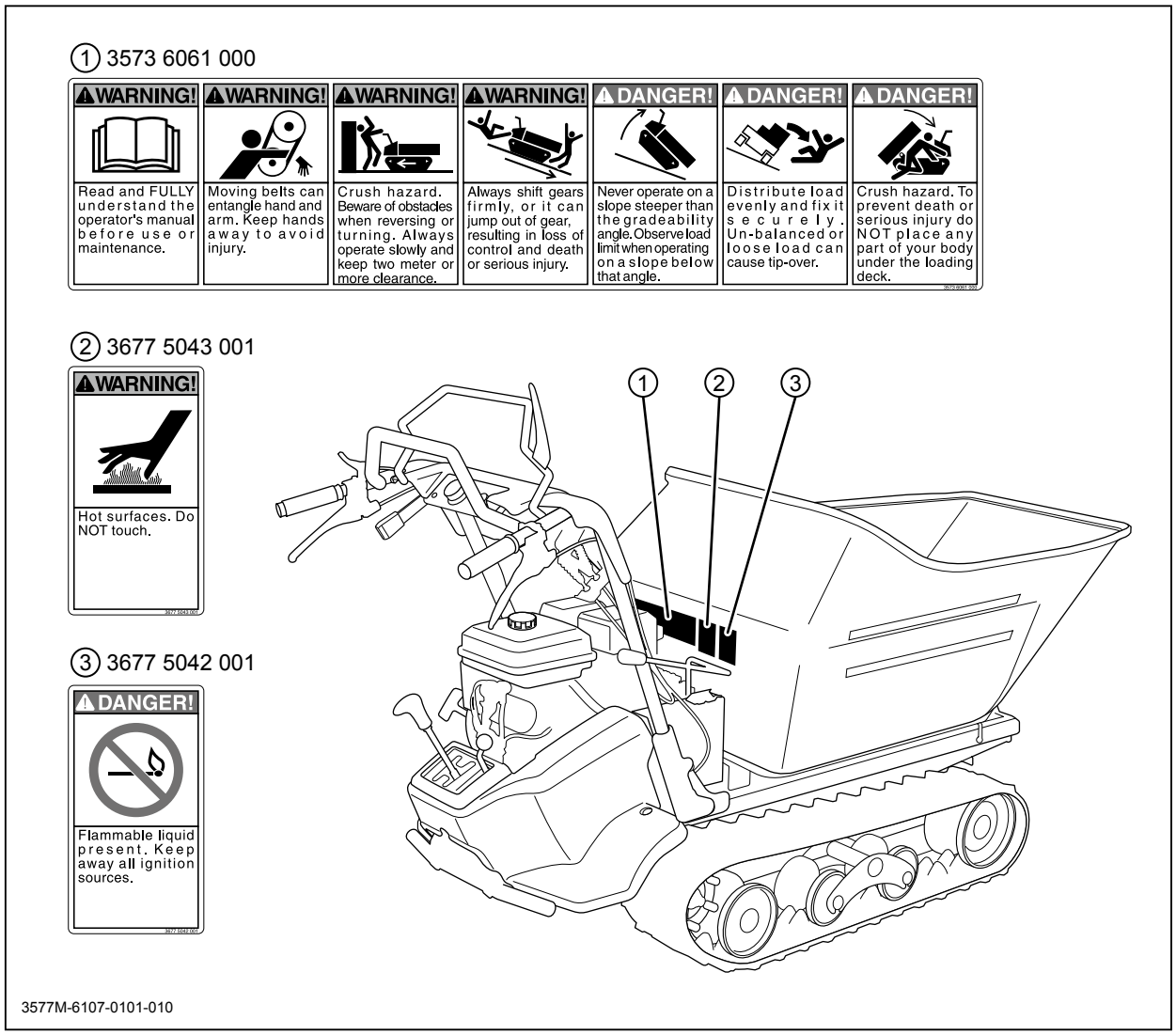

https://truckmanualshub.com/

Safety Precautions

This section contains safety precautions to follow when operating and maintaining machine. Read and understand the precautions in this section as well as throughout this manual and follow them when operating or maintaining machine. Failure to follow safety precautions could result in property damage, serious injury or death to the operator or bystanders.

Training

All operators should be familiar with the following issues when using this machine. In case machine is used by a hired worker or is rented, the employer or renter shall give practical instructions covering the following issues to the user.

- **It is essential to familiarize yourself with controls, safety labels and the proper use of machine.**

- **Never allow people unfamiliar with these instructions to operate or service machine. Do not let anyone under 18 years of age to operate this machine. Local regulations may restrict the minimum age for operating a machine. Consult your local authority.**

- **This machine is not intended to carry a person. Do not ride or carry a person on the loading deck.**

- **The operator is responsible for the accidents or hazards caused to other people or their property.**

- **Always keep in mind that care and concentration is required when working with a load-carrying machine.**

- **Loss of control on a slope cannot be regained by the application of brake. Main reasons for the loss of control are:**

→ insufficient grip of tracks.
→ excessive speed.
→ misjudging of the ground conditions, especially inclination.
→ excessive load.
→ incorrect distribution of load.

https://truckmanualshub.com/

Preparation

- **Always wear protective footwear, long trousers, hardhat, safety glasses and ear protection when operating or servicing machine. Proper clothing will minimize the chance of injury. Do not operate machine if you have long hair, loose clothing, or jewelry; all of which can get tangled in moving parts. Do not operate machine barefoot or with open sandals.**

- **Prepare beforehand the working rules and procedures such as signaling and trafic control for the work place. Following such rules will reduce the risk of accidents.**

- **Perform daily pre-startup inspection (see Preparation, page 14) before starting machine. Repair or replace damaged parts before starting machine.**

- **Fuel is highly flammable. See Checking and Filling Fuel, page 14, for important safety information on handling fuel; keep fire and spark away. Stop engine when refueling.**

- **Never handle oil or grease, service engine, or recharge battery in the presence of fire or spark.**

Operation

The stability of machine is affected by speed, rate of steering, terrain and load. Always pay close attention to these factors or loss of control or tipping over could occur, resulting in property damage, serious injury or death.

https://truckmanualshub.com/

General Driving

- **Do not operate engine in a confined space where dangerous carbon monoxide fumes can accumulate.**

- **Do not touch engine, muffler or exhaust pipe while engine is running or soon after it has stopped. These areas will be very hot and can cause burns.**

- **Do not operate machine under the influence of alcohol or drugs. Do not operate machine when you are tired, ill, or not fit to operate machine.**

- **Before starting engine and moving machine, scan around your surroundings and make sure all persons and other vehicles are a safe distance away from machine.**

- **Never operate on terrain that you are not comfortable with. Avoid terrain that is so rough, slippery or loose that you feel like machine could tip over.**

- **Always check for obstacles before operating on new terrain.**

- **Always travel slowly and use extra caution when operating on unfamiliar terrain. Be alert when traveling on changing terrain.**

- **Set handle lever to fit the operator's physique. Always hold handle grips with both hands to keep a posture when operating machine.**

- **Drive at a safe speed, taking into account surface gradient, surface conditions and load.**

- **Do not make sudden maneuvers. Sudden start, stop, or turn can make machine lose control and could cause a tip over. Be especially cautious when traveling on soft or wet ground.**

- **Never drive machine with its loading deck in raised position. Make certain that loading deck is in the lowest and locked position when driving.**

https://truckmanualshub.com/

- **On a slippery surface, travel slowly and exercise caution to reduce the chance of skidding or sliding out of control. Never operate on ice.**

- **Always make certain that there is no obstacle or person behind machine when backing up. Make certain that it is safe to back up, then move slowly and avoid sharp turns.**

- **To reduce the risk of tipping over, pay special attention when encountering an obstacle or a slope, or when braking on a slope or during a turn. See Driving on a slope below.**

- **Never attempt to drive over a large obstacle such as rock or fallen tree.**

- **Do not operate machine near the edge of a cliff, an overhang or a landslide area.**

- **Use an observer to help direct machine when visibility is poor, terrain is rugged or hilly, or maneuvering room is limited. An observer should be able to see machine and its immediate surroundings, and should give pre-arranged signals to direct the operator.**

Driving on a Slope

- **Driving on a slope can be dangerous. It can result in a tip over and cause serious injury or death. Always follow proper procedures for driving on a slope as described in this manual.**

- **When carrying no load, do NOT use machine on a slope steeper than 20 degrees. When carrying a load, observe the load limit according to the inclination (see Loading and Driving with the Load, page 7). Do not dump on a slope.**

- **Driving on a slope in a wrong manner can cause a loss of control or a vehicle tip over. Check terrain carefully before attempting to drive on a slope.**

https://truckmanualshub.com/

- Never drive on a slope that you are not comfortable with. Avoid a slope that is so rough, slippery, or loose that you feel like machine could tip over.

- When driving down a slope, stop and shift to lowest gears (auxiliary transmission in Low). Go down at a reduced speed. Use engine speed to help keep machine speed low.

- When driving up a slope, proceed at a steady rate of speed and throttle position.

- Never move throttle lever or operate side clutch suddenly.

- Drive straight up or down a slope. Avoid turning on a slope. Avoid driving machine across a slope.

- If engine stalls or loses traction during a climb and cannot make it to the top of a slope, do not try to turn machine around. Carefully back down slowly, straight down a slope.

- When going over the top of a slope, go slow; an obstacle, a sharp drop, or another vehicle or person could be on the other side of the crest.

- Without a load, drive machine backwards up a slope (operator's handle toward the top) when climbing, and drive it forward when going down a slope.

- With a load, drive machine forward up a slope (operator's handle away from the top) when climbing, and drive it backwards when going down a slope. Be especially cautious when operating on a slope with a load.

https://truckmanualshub.com/

Loading and Driving with a Load

- The maximum payload for SC 45 is 992lb (450kg). Do not exceed this maximum payload under any circumstance.

- Do not operate on a slope steeper than 20 degrees. Do not carry more than 496lb (225kg) with SC 45 when operating on a slope between 15 and 20 degrees.

- Place a load in loading deck so that the weight is evenly distributed. When carrying a load, strap it to loading deck to prevent it from shifting. Ensure that the load does not obstruct the operator's field of view.

- When carrying a load, drive at a reduced speed. Allow greater distance for braking.

- Before crossing a bridge or an overpass, make certain that the total combined weight of machine, load and operator is within the stated weight limit of the bridge or the overpass. Then, proceed carefully and at a constant speed.

Dumping

When dumping material from loading deck, take the following precautions.

- Always follow the proper procedures for dumping as described in this manual.

- Perform dumping operation on a flat, level and stable surface. Do not dump on a slope or on a rough terrain.

- Make certain that all persons are at a safe distance away from machine when raising or lowering loading deck.

- Do not move machine or leave it unattended with loading deck in the raised position.

- Engage loading deck lock plate if you must place any part of your body under loading deck in the raised (dump) position. Never place any part of your body under loading deck in the raised (dump) position without engaging loading deck lock plate.

https://truckmanualshub.com/

Parking

- Park machine on a flat, level and stable surface. Do not park in a dangerous place. Never park machine on a slope steeper than 15 degrees. Avoid parking on a slope less than 15 degrees. If parking on a slope less than 15 degrees is unavoidable, block tracks at the lower end of machine.

→ Without a load, park machine with operator's handle uphill
→ With a load, park machine with operator's handle downhill
→ Do not park sideways on a slope.

- Observe all the previous precautions for general driving, riding machine, driving on a slope, loading and driving with a load, and dumping.

- Whenever you park machine, disengage clutch and stop engine.

- Gasoline is highly flammable and can be explosive. When parking machine indoors, make certain that the building is well ventilated and that machine is not close to any source of flame or spark, including appliances with pilot lights.

Servicing

- Do not service machine when engine is running. If it is absolutely necessary to run engine while servicing, keep hands, feet, clothing and any part of the body away from any moving part, especially belts at the side of engine.

- Do not operate engine in a confined space where dangerous carbon monoxide fumes can accumulate.

- Engage loading deck lock plate if you must place any part of your body under loading deck in the raised position. Never place any part of your body under loading deck in the raised (dump) position.

- Check all fuel lines on a regular basis for fit and wear. Tighten or repair them as needed.

- Do not touch engine, muffler, or exhaust pipe while engine is running or soon after it has stopped. These areas will be very hot and can cause burns.

- Engine must be shut off before checking or adding oil.

https://truckmanualshub.com/

Name and Function of Controls

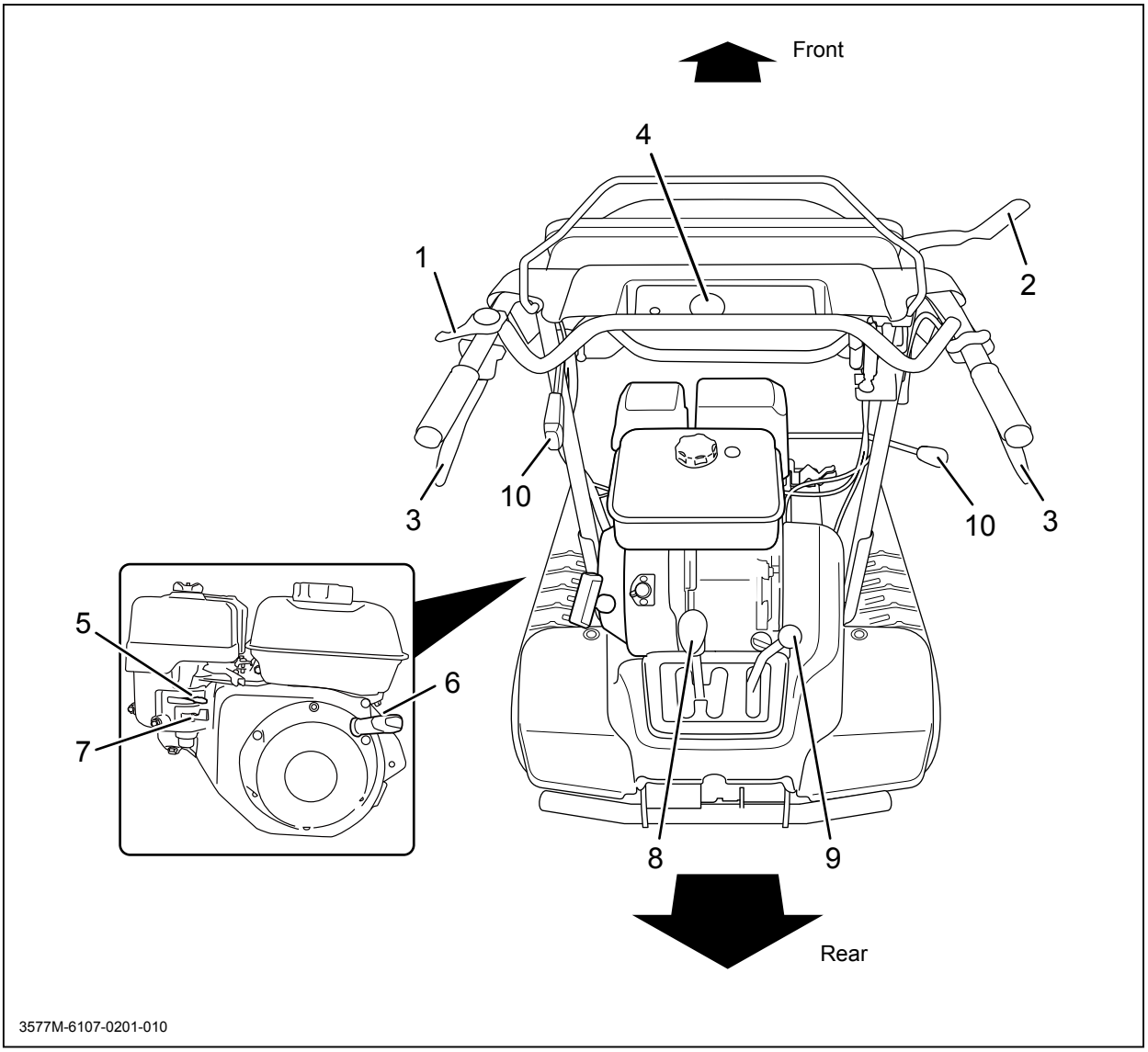

1 Throttle Lever . . . . . Throttle Lever is used to control engine speed.

2 Drive Clutch Lever . . . . . Drive Clutch Lever is used to engage or disengage drive clutch.

3 Side Clutch Lever . . . . . Side Clutch Lever is used to steer machine by engaging side clutch.

4 Main Switch . . . . . Main Switch is used to start or stop engine.

5 Choke Lever . . . . . Choke Lever is used to help start engine by closing choke valve.

https://truckmanualshub.com/

6 **Starter Handle**. . . . . Starter Handle is used to start engine.

7 **Fuel Valve Lever**. . . . . Fuel valve lever opens or shuts fuel flow.

8 **Shift Lever**. . . . . Shift Lever is used to shift gears.

9 **Auxiliary Transmission Shift Lever** . . . . Auxiliary Transmission Shift Lever is used to select fast or slow driving mode.

10 **Dump Levers** . . . . . Dump Lever is used to dump loading deck. Dump Lever raises or lowers loading deck. Dump Lever raises loading deck for dumping or lowers it from that position. There are two dump levers; one behind loading deck (deck lever) and one on the handlebar (handlebar lever).

https://truckmanualshub.com/

Product Specifications

⚠CAUTION!

· **Use this product properly after understanding its specifications thoroughly.**

Model and Type				SC 45
				One-way dump
Machine Mass			kg (lbs)	220 (485)
Maximum Payload			kN (kg)	4.41 (450)
Dimensions	Overall Length		mm (in)	2080 (81.89) {1970 (77.56)}
	Overall Width		mm (in)	740 (29.13)
	Overall Height		mm (in)	935 (36.81) {1010 (39.76)}
	Track Contact Length		mm (in)	740 (29.13)
	Crawler Tread		mm (in)	495 (19.49)
	Crawler Width		mm (in)	180 (7.09)
	Ground Clearance		mm (in)	90 (3.54)
	Loading Deck Height		mm (in)	405 (15.94)
Loading Deck	Inside Dimensions	Length	mm (in)	1245 (49.02)
		Width	mm (in)	730 (28.74)
		Height	mm (in)	420 (16.54)
	Bucket Volume	Struck Capacity	m^3 (cu. ft)	0.27 (9.53)
Engine	Model			Honda GX160
	Type			Air-cooled 4-cycle gasoline, single cylinder
	Cylinder (Bore×Stroke)		mm (in)	68×45 (2.7×1.8)
	Displacement		cm^3 (cu. in)	163 (9.9)
	Net Power		kw(PS)/rpm	3.6(4.9) /3600
	Max Net Torque		N•m(kgf•m)/rpm	10.3(1.05) /2500
	Starter System			Recoil
	Fuel			Automotive Unleaded Gasoline
	Fuel Consumption		l/h*	1.4
	Fuel Tank Capacity		L (gal. US)	3.1(0.82)
	Oil Capacity		L (US qt)	0.58(0.61)
	Ignition System			Transistorized magneto
	Spark Plug			NGK BPR6ES

*Continuous Rated Output

https://truckmanualshub.com/

Specifications

Model and Type				SC 45
				One-way Dump
Performance	Speed	Forward 1st	km/h (mph)	0.5 (0.3)
		Forward 2nd	km/h (mph)	0.8 (0.5)
		Forward 3rd	km/h (mph)	1.4 (0.9)
		Forward 4th	km/h (mph)	2.0 (1.2)
		Forward 5th	km/h (mph)	3.3 (2.1)
		Forward 6th	km/h (mph)	5.3 (3.3)
		Reverse 1st	km/h (mph)	0.7 (0.4)
		Reverse 2nd	km/h (mph)	2.5 (1.6)
	Minimum Turning Radius		m (ft)	1.2 (3.9)
	Gradeability		Degrees	20 (Unload)
Drivetrain	Clutch			Belt Tension
	Main Transmission			Gear Slide
	Auxiliary Transmission			Gear Slide
	Steering Mechanism			Dog Clutch
	Brake			Internally Expanding
	Transmission Oil Capacity		L (US qt)	1.5 (1.59)
Hydraulic System	System			Dump
	Pump Type			Gear pump
	Rated Discharge		L (US qt)/min	3.85 (4.07)
	Relief Pressure		MPa(kgf/cm^2)	13.7 (140)
	Cylinder (Bore X Stroke)		mm (in)	55 X 200 (2.17x7.87)
	Hydraulic Fluid Capacity		L (US qt)	0.6 (0.63)
	Dump Angle		Degrees	90
	Lift Speed (up)		Sec	6.2
	Lift Speed (down)		Sec	4.6

{ } indicates when handle lever is in the high position.

*These specifications are subject to change without notice.

https://truckmanualshub.com/

Contents of the Tool Bag

No.	Content	Quantitiy	Note
1	Operator's Manual	1	This Manual
2	Operator's Manual for the Engine	1	
3	Engine Service Tool	1	for Servicing the Engine

https://truckmanualshub.com/

Preparation

Pre-start up Inspection

Always perform an inspection before use.
Refer to **"Maintenance Schedule"** (page 29) for the inspection schedule and procedure.

Checking and Filling Fuel

⚠WARNING!

- **Keep fire and spark away when handling fuel.**
- **Always stop engine before refueling.**
- **Keep the fuel level below the bottom of fuel filter inside fuel filler. Do not overfill fuel so that fuel will not overflow. In case fuel is spilt, wipe out immediately.**

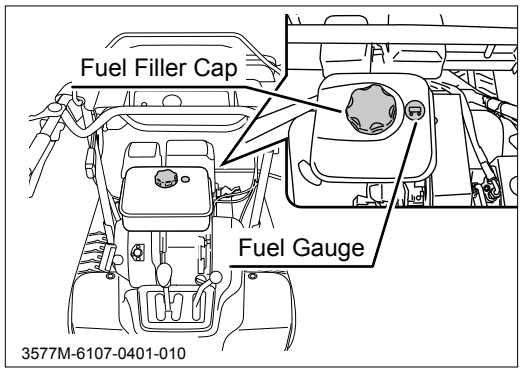

1. Check fuel gauge. If fuel level is low, fill fuel.
2. Open fuel filler cap and fill fuel.
3. Close fuel filler cap securely.

NOTE

- **Fuel : Automotive Unleaded Gasoline**
- **Fuel Tank Capacity: 3.1L**

https://truckmanualshub.com/

Adjusting Handle Lever Angle

⚠WARNING!

- **Set handle lever to a proper position. Improperly adjusted handle bar can cause an accident.**

⚠CAUTION!

- **Pinch hazard. Make certain that hands or fingers are not in the way to be caught when adjusting handle lever.**
- **Make certain handle lever is securely locked after adjustment. Move handle lever back and forth to see if it is locked.**

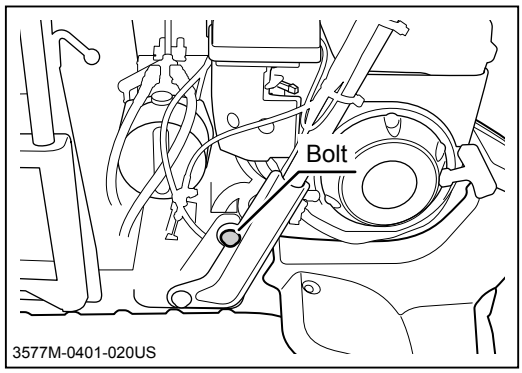

1. Undo bolts on both sides.
2. Adjust the angle of handle lever. There are two positions. Adjust it to suit operator's physique or liking.
3. Tighten bolts securely.

https://truckmanualshub.com/

Driving

Starting

⚠WARNING!

- **Always start and run engine in a well ventilated place.**
- **Always make certain of the safety of your surroundings when starting engine.**

⚠CAUTION!

- **Do not use this machine in temperatures above 40ºC or below -15ºC. This machine cannot perform adequately in these temperature ranges. Using this machine under such conditions may result in an accident or cause damage to machine.**
- **In the winter or cold climate, warm up engine thoroughly before driving machine. A cold engine delivers poor performance, which may result in an accident. It also causes excessive wear.**
- **Do not use this machine in dusty places such as desert. Dust may clog air cleaner or enter engine, which may reslt in loss of performance and an accident. It also causes excessive wear.**
- **Do not use this machine in the altitude above 1500m in its original configuration. This machine cannot perform adequately above that altitude. Using this machine under such conditions may result in an accident or cause damage to machine. If you need to use this machine above that altitude, contact your CANYCOM representative.**

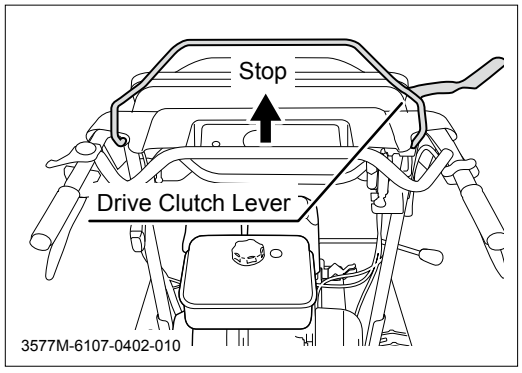

1. Make sure drive clutch lever is in [Stop] position.

NOTE

- **Electric start model is equiped with safety interlocking switch, and it can only be started when drive clutch lever is in [Stop] position.**

https://truckmanualshub.com/

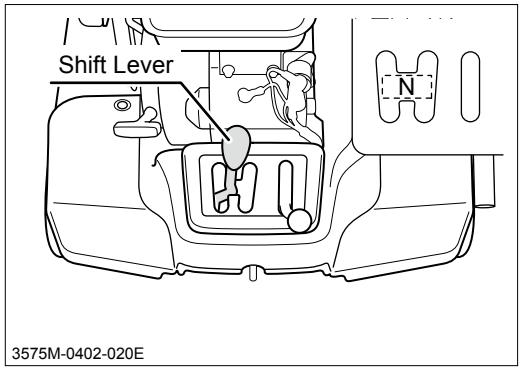

2. Make sure shift lever is in [N (neutral)] position.

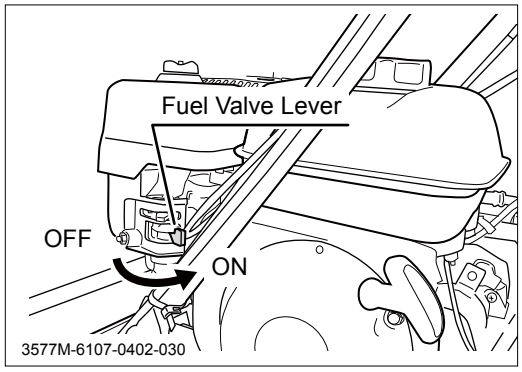

3. Open fuel valve lever.

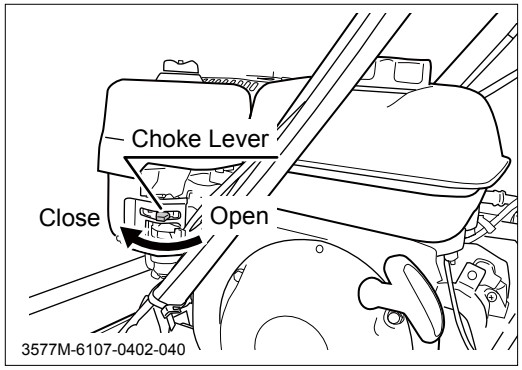

4. Move choke lever to [Close] position.

NOTE

- **It is not necessary to close the choke valve when engine is already warm.**

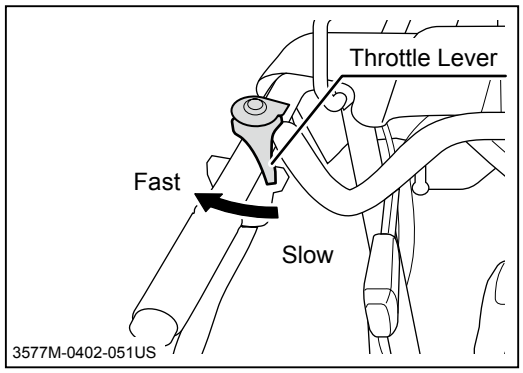

5. Move throttle lever a little toward [Fast] position.

https://truckmanualshub.com/

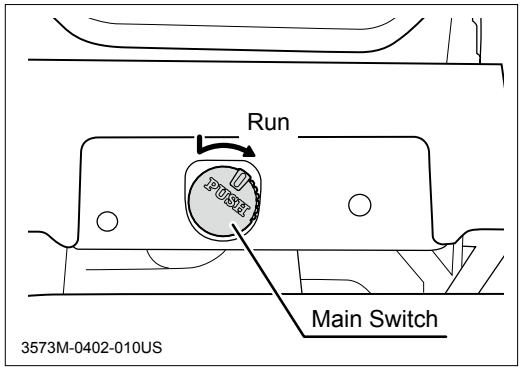

6. Press down main switch and turn it to [(run)] position until it locks in that position.

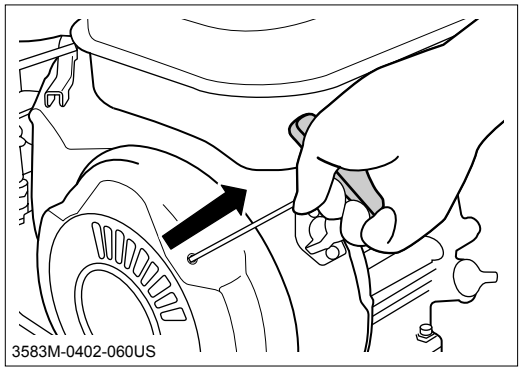

7. Pull starter handle rapidly to start engine. When engine starts, return handle gently

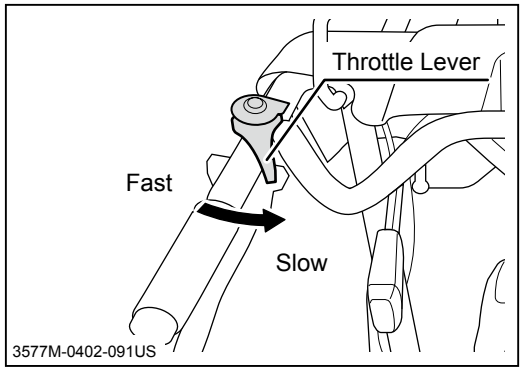

8. Once engine starts, return throttle lever to [Slow] position.

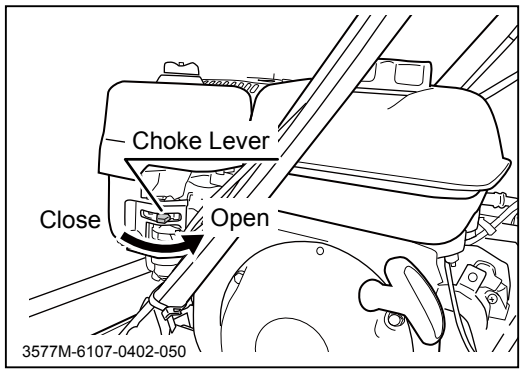

9. Move choke lever back to the original ([Open]) position.
10. Run engine for about 5 minutes without load to warm up.

NOTE

- **Drive machine gently in the first 40 to 50 hours of use after purchase for breaking-in.**

https://truckmanualshub.com/

Driving

⚠WARNING!

- **Do not allow bystanders to come near machine when driving.**
- **Set handle lever in a proper position for the operator. Setting them in an improper position may hinder safe operation.**
- **Always make certain of the safety of your surroundings before driving; start slow. Adjust speed according to the condition and gradient of the surface on which you are traveling.**
- **Do not a make sudden start, acceralation, change of speed, change of direction, or stop. Do not turn at high speed. Avoid sudden maneuvers; this may cause the operator to be dragged or to be thrown, or machine to tip over.**
- **Never drive machine with its loading deck in raised position. Make certain that loading deck is in the lowest and locked position when driving.**
- **Shift auxiliary transmission to [Low] position and drive slowly when traveling on a slope. Operator can be dragged or thrown, or machine can tip over.**
- **Do not drive machine across a slope. Machine can slip or tip over.**
- **Do not turn on a slope. Machine can turn the opposite direction, slip or tip over.**
- **Use an observer to help direct machine when the visibility is poor, terrain is rugged or hilly, or maneuvering room is limited. The observer should be able to see machine and its immediate surroundings, and should give pre-arranged signals to direct the operator.**
- **Do not turn main switch to [(STOP) (stop)] position while driving.**

https://truckmanualshub.com/

⚠CAUTION!

- **Pinch hazard. Make certain that hands or fingers are not in the way to be caught when operating clutch lever.**

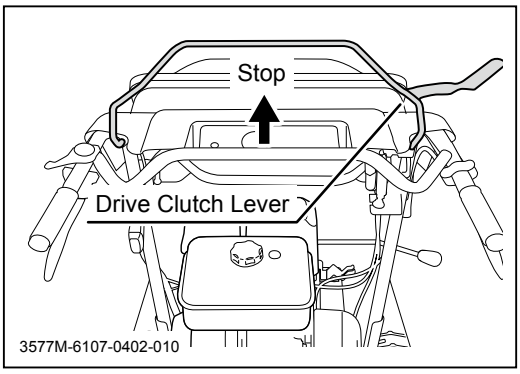

1. Make certain of the safety of your surroundings.
2. Make certain that drive clutch lever is in [Stop] position.

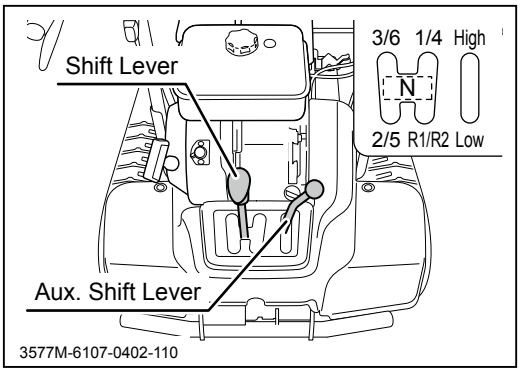

3. Move Shift lever and Auxiliary (aux.) shift lever into a desired position.

NOTE

- **Refer to "Product Specifications" (Page 11) for speed in each gear.**
- **When it is difficult to shift gears, move drive clutch lever toward [Run] position slightly and try again. It may help shifting smoothly.**

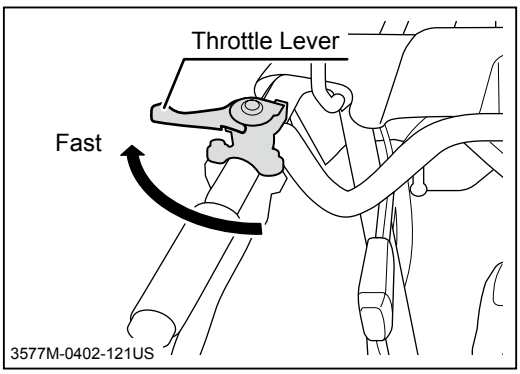

4. Move throttle lever to [Fast] position to raise engine speed.

https://truckmanualshub.com/

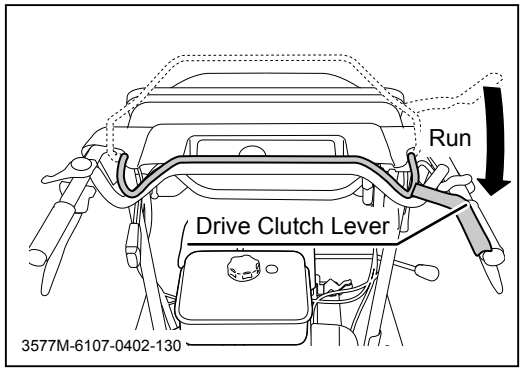

5. Move drive clutch lever to [Run] position to start.

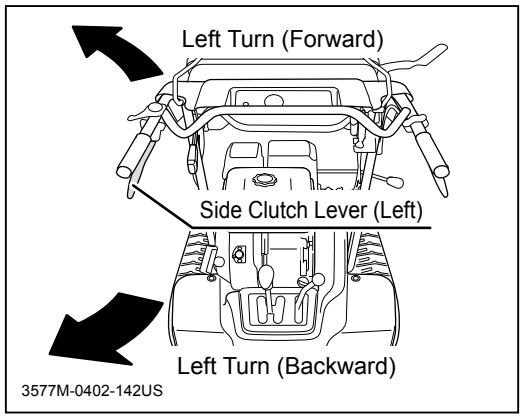

6. Grasp left side clutch lever to turn left.

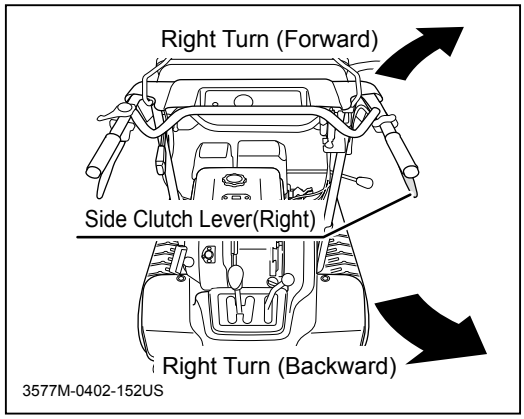

7. Grasp right side clutch lever to turn right.

https://truckmanualshub.com/

Stopping

⚠WARNING!

- **Do not make a sudden stop. The machine may skid or tip over.**
- **Always park on a firm, level place. Never park on a potentially dangerous place.**

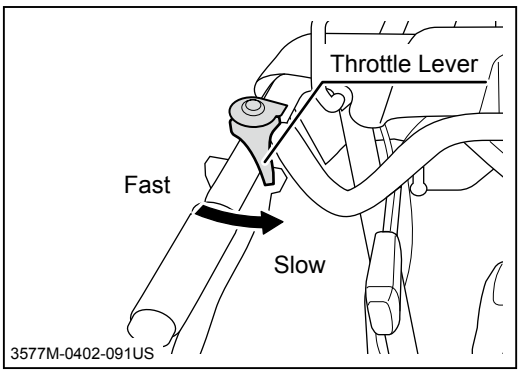

1. Move throttle lever toward [Slow] position to slow down.

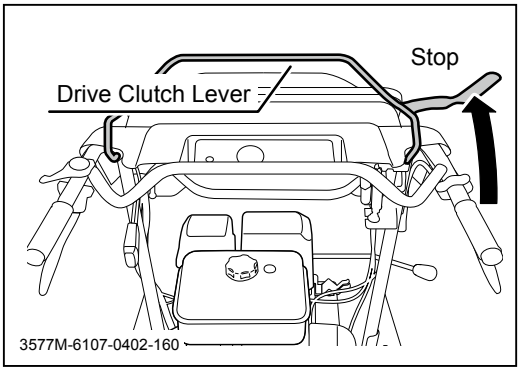

2. Move drive clutch lever to [Stop] position to stop.

https://truckmanualshub.com/

Shifting

⚠WARNING!

- **Always stop machine to shift gears.**
- **Always shift gears firmly. When transmission is not firmly shifted, it may jump out of gear, resulting in loss of control of machine.**

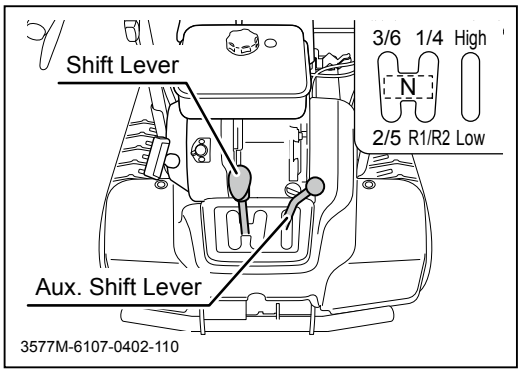

1. Stop machine.
2. Move shift lever or auxiliary (aux.) shift lever firmly into a desired position.

NOTE

- **Refer to "Product Specifications" (Page 11) for speed in each gear.**
- **When it is difficult to shift gears, move drive clutch lever toward [Run] position slightly and try again. It may help shifting smoothly.**

https://truckmanualshub.com/

Parking

⚠WARNING!

- **Always park on a firm, level ground. Never park on a potentially dangerous place.**
- **Avoid parking on a slope. Never park on a slope with an incline of 15 degrees or steeper. If it is absolutely necessary to park machine on a slope less than 15 degrees, make certain to apply parking brake firmly and block tracks with chocks.**

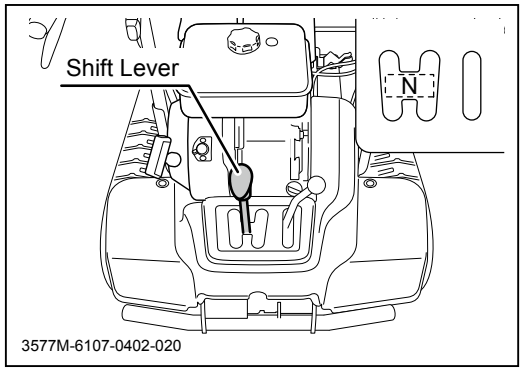

1. Stop machine.
2. Move throttle lever toward [Slow] position to decrease engine speed.
3. Move shift lever to [N (neutral)].

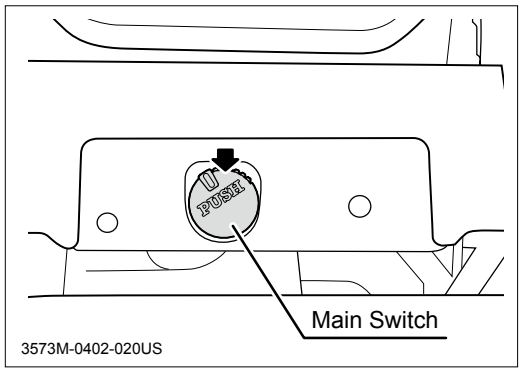

4. Push main switch. It automatically turns to [(STOP) (stop)] position and engine stops.

https://truckmanualshub.com/

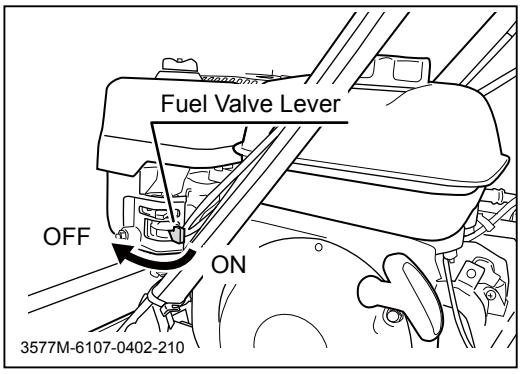

5. Close Fuel Valve Lever.

NOTE

- **Carbon deposit tends to accumulate on spark plug when running engine at low engine speed. When engine has been run at low engine speed for an extended period, run engine at high engine speed for a while before stopping engine to burn off carbone deposite.**

Working

Dumping

⚠WARNING!

- **Always make certain of the safety of your surroundings when dumping.**
- **Do not dump on a slope. Machine may tip over.**

⚠CAUTION!

- **Always run engine when dumping.**
- **When lowering loading deck with a load on it from a dump position, lower loading deck gently.**

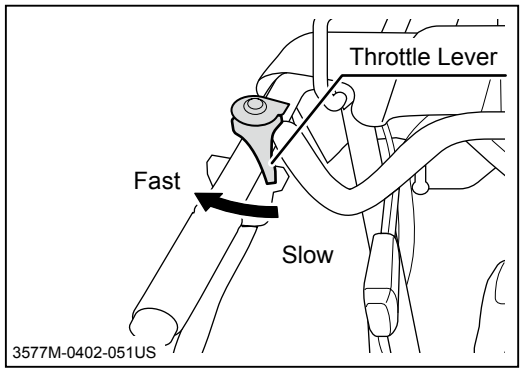

1. Move throttle lever to a desired position to set engine speed.

NOTE

- **Dumping speed can be adjusted by engine speed.**

https://truckmanualshub.com/

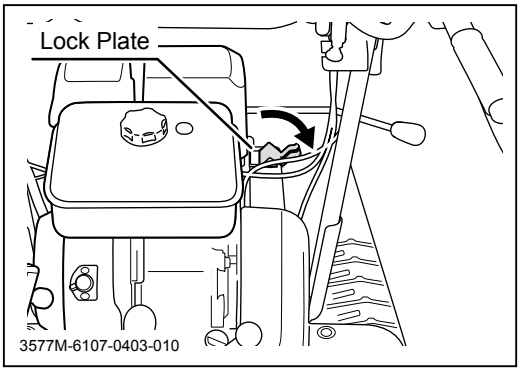

2. Turn lock plate so that dump lever can be operated.

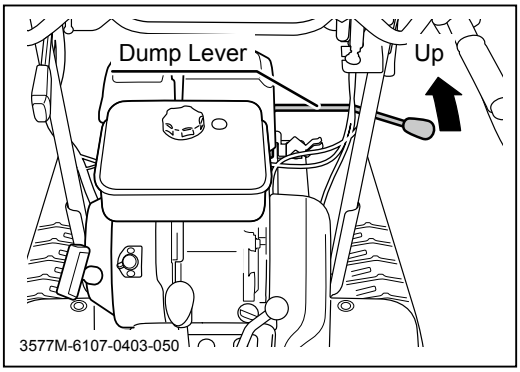

Raising using Deck Lever

3. Move dump lever up to raise loading deck.
4. When loading deck reaches its upper limit, a hissing noise is heard; move dump lever back to [● (neutral)] position.

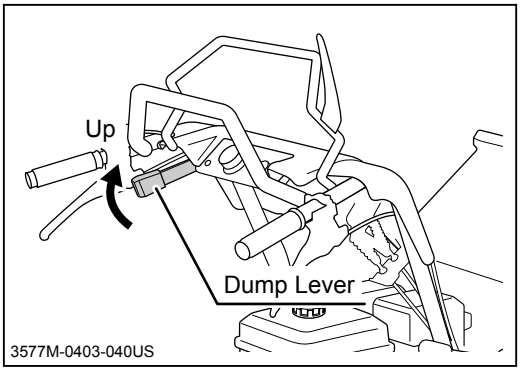

Raising using Handlebar Lever

3. Move dump lever up to raise loading deck.
4. When loading deck reaches its upper limit, a hissing noise is heard; release dump lever. It automatically returns to neutral position.

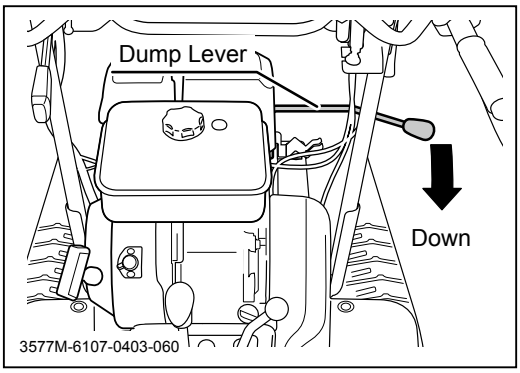

Lowering using Deck Lever

5. Move dump lever down to lower loading deck.
6. When loading deck reaches its lower limit, a hissing noise is heard; move dump lever back to [● (neutral)] position.

https://truckmanualshub.com/

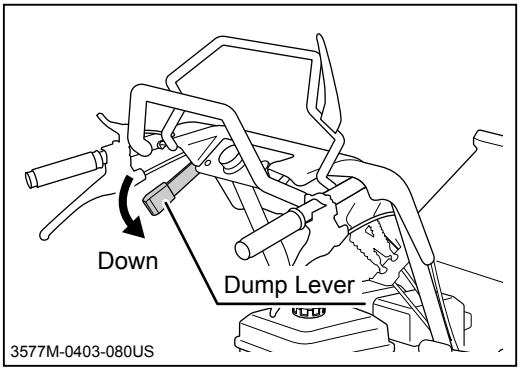

Lowering using Handlebar Lever

5. Move dump lever down to lower loading deck.
6. When loading deck reaches its lower limit, a hissing noise is heard; release dump lever. It automatically returns to neutral position.

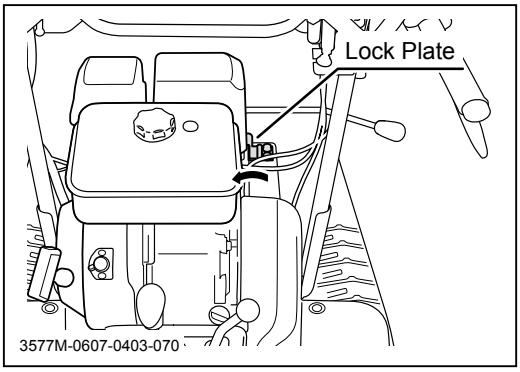

7. Turn lock plate back in place to lock dump lever.

https://truckmanualshub.com/

Using Safety Lock Plate

⚠WARNING!

- **When it is necessary to inspect or work under loading deck, raise loading deck to do so. Never work under loading deck when it is in the dumping position.**
- **Hold loading deck in the raised position with safety lock plate when inspecting or working under loading deck.**
- **Make certain that safety lock plate securely hooks crossmember. Loose safety lock plate may result in injury or death.**

⚠CAUTION!

- **Make certain to undo safety lock plate before lowering loading deck.**

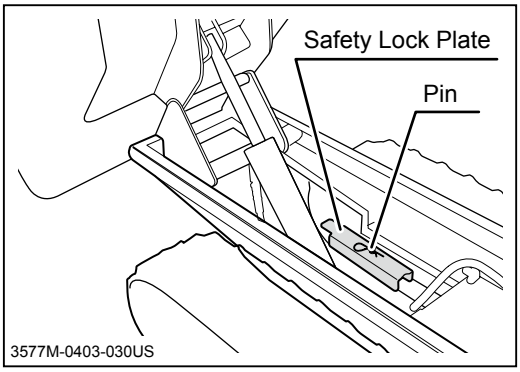

1. Raise the loading deck.
2. Remove the pin then remove the safety lock plate.

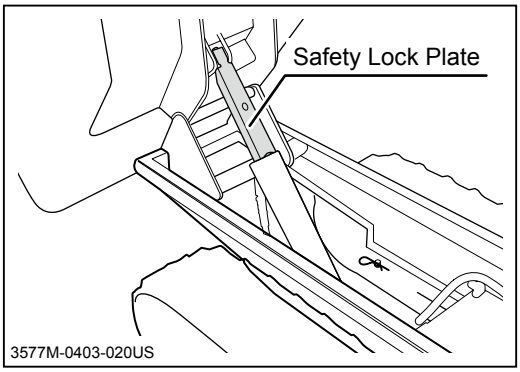

3. Mount safety lock plate following the picture on the left to fix loading deck firmly.

https://truckmanualshub.com/

Maintenance Schedule

⚠WARNING!

- **Follow the scheduled maintenance as described below. Failure to do so may result in mechanical or property damage, injury or death.**

Engine

Daily Inspection

- Fuel - not to be empty or dirty. no sediment or water in it.
- Air Cleaner Element - to be clean and free of damage.
- Engine Oil - to be clean and at the correct level.
- Bolts, Nuts, Fasteners - not to be loose or missing.
- Leaks - no fuel or oil leaks to be found.
- Sound, Vibration - no abnormal noise or excessive vibration.
- Overall - to be clean, without missing pieces.

Scheduled Maintenance

Hours used	Before use (daily)	20 hours	50 hours	100 hours	200 hours	300 hours	500 hours	1000 hours
Clean and tighten fasteners	○							
Check fuel pipes for fit and leaks	○							
Check and fill oil	○							
Change oil		○ (1st time only)		○				
Clean spark plug				○				
Check and clean air cleaner element			○					
Change air cleaner element					○			
Clean fuel strainer					○			
Clean and adjust spark plug					○			
Check and adjust valve clearance						◎		
Clean cylinder head							◎	
Clean carburator							◎	
Lap intake and exhaust valves							◎	
Replace fuel hose	Every three years (or as needed)							
Overhaul								◎

◎: for items maked with this symbol, please consult with your CANYCOM representative.

https://truckmanualshub.com/

Chassis

- Perform a pre-startup inspection (PSI) before each use, a monthly inspection once a month, and a yearly inspection once a year.

- Some maintenance procedures described below may require special knowledge or tools and instruments. Contact your CANYCOM representative to perform such procedures.

Item		Description	Schedule			Note
			PSI	Mon	Year	
Drive Train	Track	There shall not be any marked cut, deterioration, or wear.	√	√	√	
		Track shall be properly tensioned; shall not be too loose or too tight.	√	√	√	Adjusting: Page 39
		Tension bolt shall be free of deformation or corrosion.	√	√	√	
	Transmission	Transmission shall not jump out of the gear. Irregular noise or overheating shall not be observed.	√	√	√	
		There shall not be oil leaks in or around transmission.		√	√	
	Drive Belt	Belt shall be free of damage or wear.		√	√	Inspecting: Page 41
		Belt tension shall be properly adjusted.		√	√	Inspecting/Adjusting: Page 41
	Clutch	Clutch shall not make noise and shall disengage completely when operated at idle.		√	√	
		Clutch shall not slip and shall engage smoothly.		√	√	
	Brake	Brake shall work properly.	√	√	√	Inspecting/Adjusting: Page 42
		Brake shall be able to hold machine on a 25-degree slope.		√	√	
	Side Clutch	Side clutch shall work positively without making irregular noise.	√	√	√	
		Lever play and stroke shall be properly adjusted.		√	√	Inspecting/Adjusting: Page 43
		Wire shall be free of damage, excessive play at joints, or rust on pins.		√	√	

https://truckmanualshub.com/

Item		Description	Schedule			Note
			PSI	Mon	Year	
Drive Train	Linkage	Rods, links, and wires in linkage shall be free of deformation or damage.	√	√	√	
		Connections shall be free of looseness, excessive play, or missing cotter pins.	√	√	√	
Body, Chassis, Loading Deck, Safety Devices	Chassis Frame	Shall be free of cracks, deformation, or corrosion.		√	√	
		Fastening bolts or nuts shall not be loose or missing.		√	√	
	Body Panels	Shall be free of cracks or deformation.		√	√	
		Fastening bolts or nuts shall not be loose or missing.		√	√	
	Loading Deck	Loading deck shall raise and lower smoothly.		√	√	
		Panels shall slide and open smoothly and can be locked in place securely.		√	√	
		Shall be free of cracks, deformation, or corrosion.		√	√	
		Fastening bolts or nuts shall not be loose or missing.		√	√	
	Safety Lock Plate	Safety lock plate shall be free of any deformation.		√	√	
	Labels	Warning labels and instruction plates shall be clean, legible, and free of damage.	√	√	√	
Hydraulic System	Hydraulic Package	Hydraulic fluid shall be clean and at correct level.		√	√	Inspecting/Changing: Page 44
		No leaks shall be found in or around hydraulic package.		√	√	
		Fastening bolts and nuts shall not be loose or missing.		√	√	
		Breather shall not be clogged.			√	
		There shall be no leaks in pipes, hoses, joints, or seals.		√	√	
		No irregular vibration, noise, or heat shall be observed when hydraulic package is in operation.			√	
		Amount and pressure of discharge under load shall be within the standard range specified by the manufacturer. *this may be skipped if irregular vibration, noise, or heat described above is not observed.			√	

https://truckmanualshub.com/

Item		Description	Schedule			Note
			PSI	Mon	Year	
Hydraulic System	Hydraulic Cylinder	Shall work smoothly.		√	√	
		There shall be no leaks when extending and contracting cylinder.		√	√	
		Extend cylinder fully under load and hold. Stroke shall be within the range specified by manufacturer.			√	
		Cylinder tube and rod shall be free of dents, cracks, bends, or scratches.		√	√	
		Cylinder mounting pins shall be free of damage or excessive wear.		√	√	

List of Fluids and Lubricants

Item	Schedule	Grade	Cap.
Fuel	As needed.	Automotive unleaded gasoline.	3.1L
Engine Oil	Fill Inspect daily. Fill as needed. Change Initially - After 25 hours of use. Every 50 to 100 hours afterwards.	Automotive gasoline engine oil API rating: SE or better. SAE rating: 10W-30 or 10W-40	0.58L
Transmission Oil	Change Initially - After 50 hours of use. Every 500 hours afterwards.	Gear Oil API rating: GL-4 or 5 SAE rating: #80	1.5L
Hydraulic Fluid	Fill Inspect every 100 hours. Fill as needed.	ISO VG32	0.6L

https://truckmanualshub.com/

List of Lubricants

Lubrication Area	Schedule	Grade
Linkage for transmission lever	Every 6 months	Chassis Grease
Fulcrum point for dump device *2	Every 6 months	Chassis Grease
Both end of hydraulic cylinder (above and bottom)	Every 6 months	Transmission Oil API : GL4 or GL5 SAE : #80

https://truckmanualshub.com/

List of Consumables and Spares

⚠CAUTION!

- **When replacing a consumable or spare, always use the CANYCOM genuine part.**

Item	Part No.	Schedule	Qty.
Engine			
Air Cleaner Element	17210-ZE1-822	Replace if defective.	1
Spark Plug (NGK BPR6ES)	98079-56876	Replace if defective.	1
Fuel Filter	17672-Z4H-000	Replace if defective.	1
Drive Train			
V-Belt (Drive SGLA31)	08511600031	Replace if defective.	1
V-Belt (Hydraulics A31)	08510000031	Replace if defective.	1
Track	35722021000	Replace if defective or reaches the wear limit.	2
Brake Lining	73184019500	Replace if defective.	1
Wire (Drive Clutch)	35743112000	Replace if defective.	1
Wire (Parking Brake)	35743121000	Replace if defective.	1
Wire (Side Clutch)	35743023000	Replace if defective.	2
Hydraulic System			
Hydraulic Hose	36776337000	Once every 2 years or if defective.	1
Hydraulic Hose	37053811000	Once every 2 years or if defective.	1

NOTE

- **Rubber products such as the hydraulic hose deteriorate over time. Replace them every 2 years.**
- **Track wear limit: 5mm of lug height**

https://truckmanualshub.com/

Removing and Installing Body Panels

⚠CAUTION!

- **Cut or pinch hazard exists when removing or installing body panels; beware of sharp edges and pinch points.**
- **Make certain to reinstall panels after removing for repairs or inspection.**

Fender

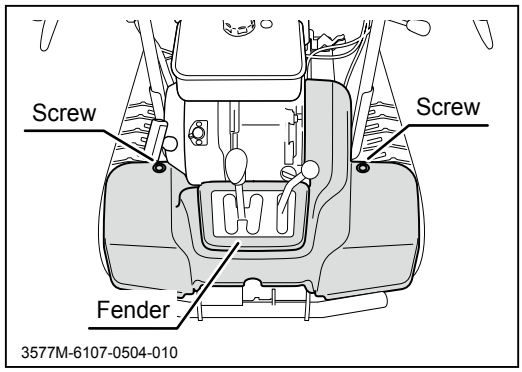

Removing

1. Remove two screws that secure fender. Remove fender.

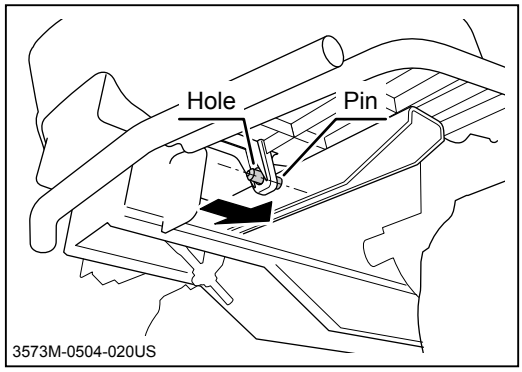

Installing

1. Put fender back in its place. Align hole on fender with pin on chassis and move fender so that pin mates with hole.
2. Install two screws.

Belt Cover

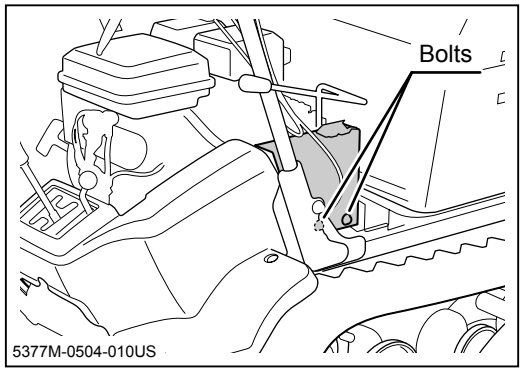

Removing

1. Remove two screws that secure belt cover. Remove belt cover.

Installing

1. Put belt cover back in its place. Install two bolts.

https://truckmanualshub.com/

Engine

⚠WARNING!

- **Always stop engine before servicing.**
- **Allow engine to cool off before servicing. Engine is very hot after operation and may pose a burn hazard.**
- **Keep fire and spark away when handling fuel.**

Engine Oil

⚠CAUTION!

- **Dispose of drained oil properly.**
- **Make certain to fill engine with correct grade of oil to the specified level. Insufficient amount or wrong grade of oil reduces performance and may cause permanent damage to engine.**

NOTE

- **To obtain correct reading, check oil level before starting, or wait about 10 minutes after stopping engine to allow oil to drain back to oil pan. Circulating oil stays in various parts of engine right after stopping.**
- **Always check oil level on a level ground.**
- **Recommended Oil and Quantity: see "List of Fluids and Lubricants" (page 32)**

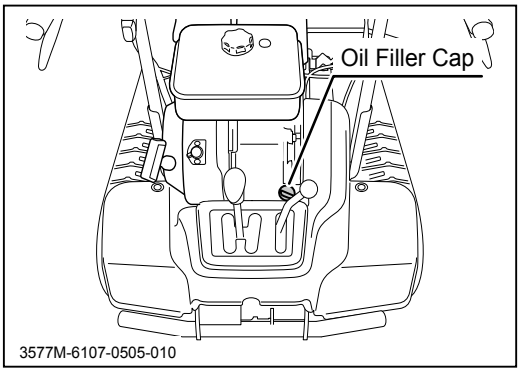

Inspecting

1. Park machine on a level ground.
2. Remove oil filler cap.
3. Follow the instructions in **"Operator's Manual for the Engine"** to check oil.
4. Screw oil filler cap firmly back in place.

https://truckmanualshub.com/

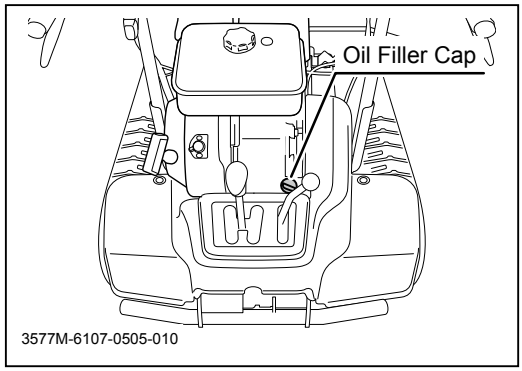

Filling

1. Remove oil filler cap.
2. Follow the instructions in **"Operator's Manual for the Engine"** to fill oil.
3. Check oil level.
4. Screw oil filler cap firmly back in place.

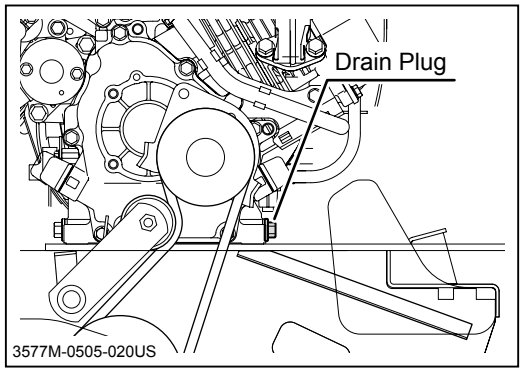

Changing

1. Have an appropriate oil drain pan.
2. Raise loading deck and set safety lock plate
3. Remove oil drain plug and drain oil.
4. Put drain plug back in place.
5. Fill oil.
6. Release safety lock plate and lower loading deck.

Air Cleaner

⚠CAUTION!

- **Clean air cleaner element regularly. Dirty air cleaner element reduces engine performance and life.**
- **Replace air cleaner element if damaged.**

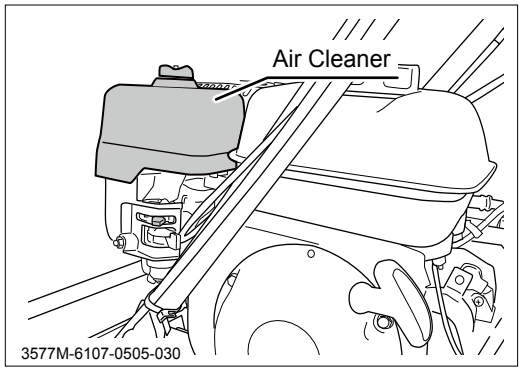

1. Follow the instructions in **"Operator's Manual for the Engine"** to clean or replace air cleaner element.

https://truckmanualshub.com/

Spark Plug

⚠CAUTION!

- **When removing spark plug cap, do not pull cable; pull plug cap. Pulling cable can damage the conductor or the joint of cable.**
- **Replace spark plug if damaged.**

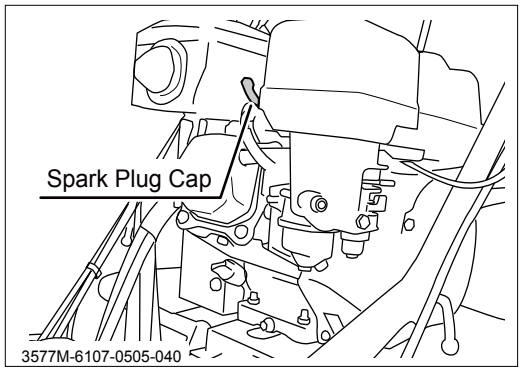

1. Remove spark plug cap and spark plug.
2. Follow the instructions in **"Operator's Manual for the Engine"** to inspect, clean, or replace spark plug.
3. Put spark plug and spark plug cap back in place.

Fuel Filter

⚠WARNING!

- **Fuel is highly flammable. Keep fire and spark away when servicing fuel filter.**
- **If fuel is spilt, wipe it off immediately.**
- **Dispose of waste fuel properly.**

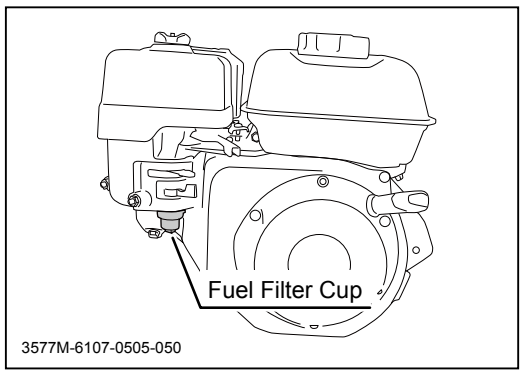

1. Follow the instructions in **"Operator's Manual for the Engine"** to clean fuel filter.
2. Start engine and visually inspect fuel filter cup for leaks.

https://truckmanualshub.com/

Drive Train

⚠WARNING!

- **Stop engine when servicing drive train.**
- **Allow machine to cool off before servicing. Engine is very hot after operation and may pose a burn hazard.**

Track

⚠WARNING!

- **Jack up machine securely when inspecting and adjusting track. Jack it up on a level ground.**
- **Always unload machine before jacking up.**
- **Make certain to adjust track tension properly. Inproperly tensioned tracks may wear or come off, resulting in property damage, serious injury or death.**

NOTE

- **Track stretches during its use-life. Inspect and adjust regularly.**

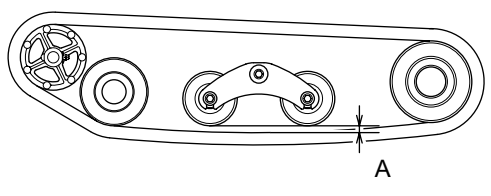

3568M-0507-110E

Inspecting

1. Jack up machine so that track is parallel to the ground.
2. Inspect the clearance between track and center roller (clearance A) to be between 10 and 15mm. Adjust tracks if the clearance is not within this range.
3. Lower machine.

https://truckmanualshub.com/

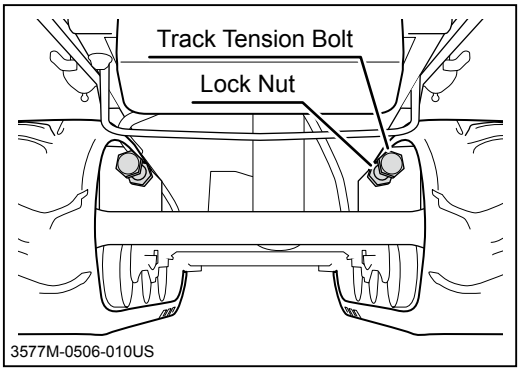

Adjusting

1. Jack up machine so that it is parallel to the ground.
2. Loosen lock nut under machine.
3. Adjust track tension bolt so that the clearance between track and center roller (clearance A) at the furthest is between 10 and 15mm.
4. Tighten lock nut
5. Lower machine.

Transmission Oil

⚠CAUTION!

- **Make certain to fill transmission with the correct grade of oil to the specified level. Insufficient amount or wrong grade of oil reduces performance and may cause permanent damage to transmission.**
- **Dispose of drained oil properly.**

NOTE

- **Recommended Oil and Quantity: see "List of Fluids and Lubricants" (page 36)**

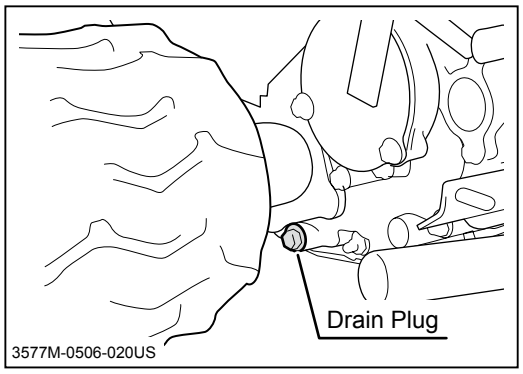

1. Park machine on level ground.
2. Have an appropriate drain pan.
3. Remove fender.
4. Remove drain plug to drain oil.
5. Install drain plug.

https://truckmanualshub.com/

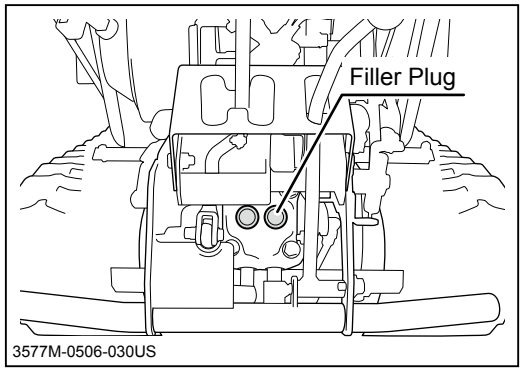

6. Remove filler plug.
7. Fill specified oil into filler.
8. Install filler plug.
9. Install fender.

Drive Belt

⚠CAUTION!

- **Adjust belt tension properly. Inproperly tensioned belt may reduce performance and its service life.**

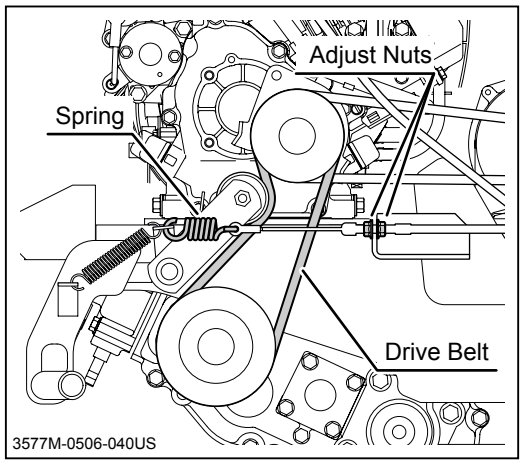

1. Remove fender.
2. Move clutch lever to [Run] position.
3. Inspect drive belt tension. Adjust tension with adjust nuts so that the spring stretches by 1.5-2mm.
4. Visually inspect drive belt for damages. If damaged, contact your dealer to replace it.
5. Install fender.

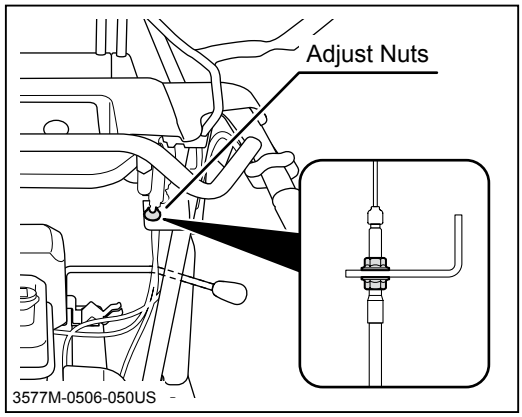

https://truckmanualshub.com/

Parking Brake

⚠WARNING!

- **Always keep brake adjusted for maximum performance. Improperly adjusted brakes may result in property damage, serious injury, or death.**

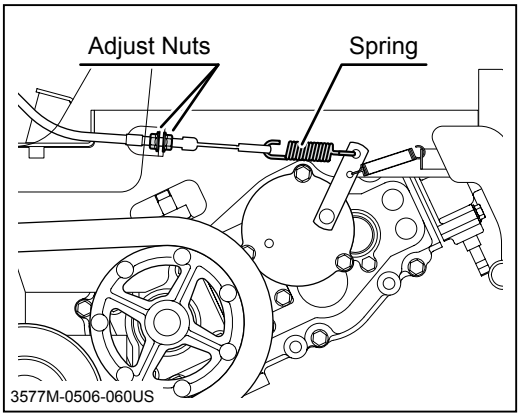

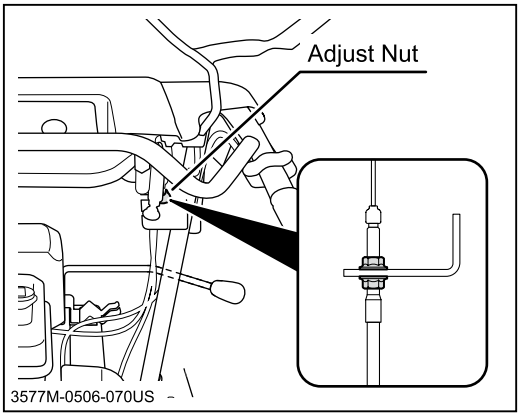

1. Remove fender.
2. Move drive clutch lever to [Stop] position.
3. Inspect that the amount of stretch on brake spring is 3-4 mm. If it is not, adjust with adjust nuts.
4. Install fender.

https://truckmanualshub.com/

Side Clutch

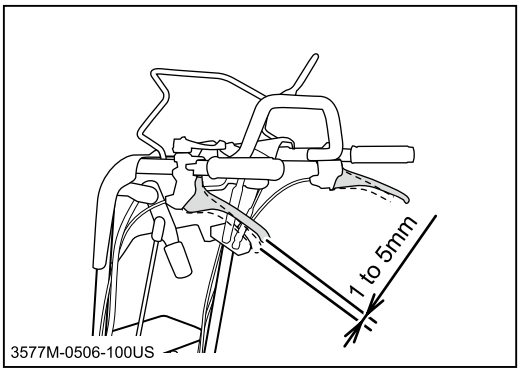

1. Raise loading deck and support it with loading deck safety lock plate.
2. Adjust side clutch with adjust nut so that the play on side clutch lever is between 1 and 5 mm.
3. Undo safety lock plate and lower loading deck.

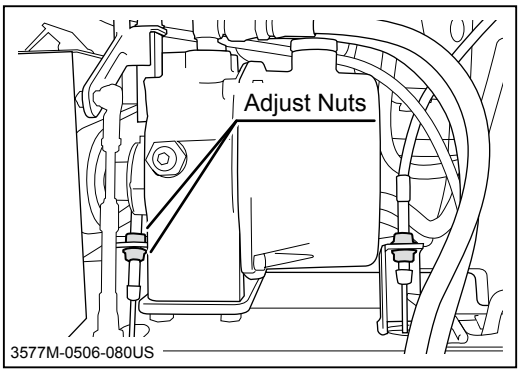

Lubrication

⚠CAUTION!

- **Follow the maintenance schedule to lubricate machine. Lack of lubrication may result in rust, excessive wear or seizure.**

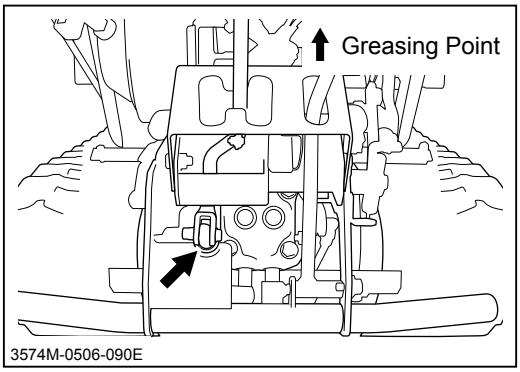

1. Remove fender.
2. Apply specified grease on the greasing point.
3. Install fender.

https://truckmanualshub.com/

Hydraulic System

⚠WARNING!

- **Stop engine when servicing drive train.**
- **Allow machine to cool off before servicing. Engine is very hot after operation and may pose a burn hazard.**

Hydraulic Package

⚠CAUTION!

- **Make certain to fill hydraulic package with specified fluid to the specified level. Insufficient amount or wrong grade of fluid reduces performance and may cause permanent damage to engine.**
- **Dispose of drained oil and fluids properly.**

NOTE

- **To obtain correct reading, check hydraulic fluid level with loading deck in the lowered (not dumped) position.**
- **Always check hydraulic fluid level on a level ground.**
- **Recommended Oil and Quantity: see "List of Fluids and Lubricants" (page 32)**

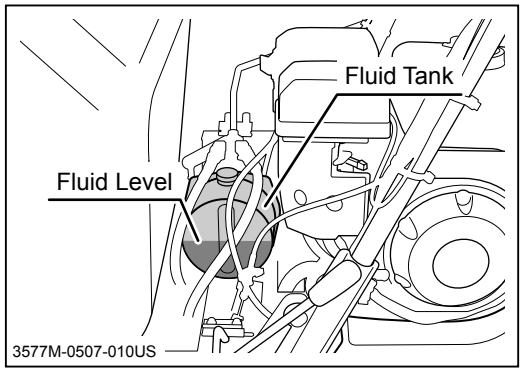

Inspecting

1. Park machine on a level ground.
2. Visually inspect the hydraulic fluid level. Make certain the fluid level is above 600 line.
3. If fluid level is low, fill fluid.

https://truckmanualshub.com/

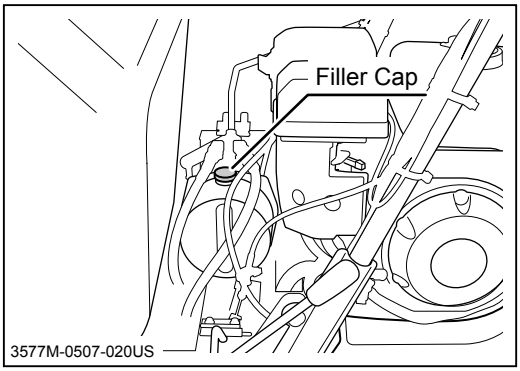

Filling

1. Remove filler cap. Fill fluid.
2. Put filler cap back in place firmly.
3. Run engine for a while to circulate hydraulic fluid.

Hydraulics Belt

⚠CAUTION!

- **Adjust belt tension properly. Inproperly tensioned belt may reduce performance and its service life.**

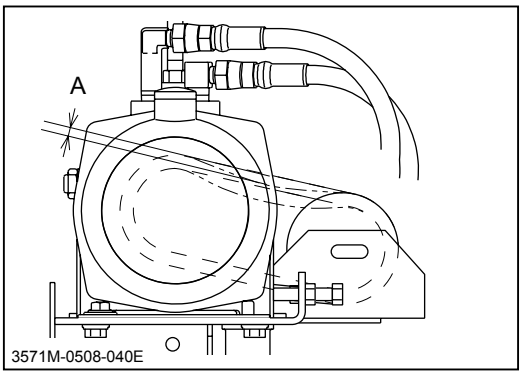

Inspecting

1. Remove belt cover.
2. Inspect drive belt tension. Push on the middle of hydraulics belt with a finger to see if its sag A is about 10mm. If not, adjust.
3. Visually inspect drive belt for damages. If damaged, contact your dealer to replace it.
4. Install belt cover.

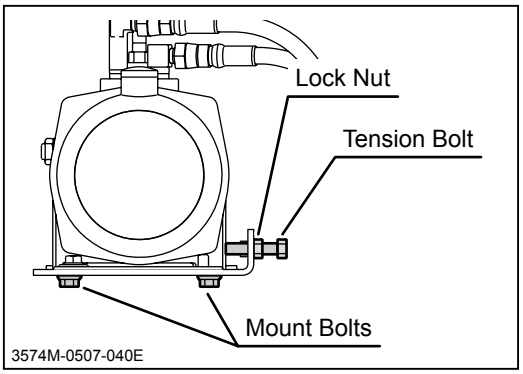

Adjusting

1. Loosen four mount bolts.
2. ILoosen lock nut.
3. Adjust belt tension with adjust nut so that it sags about 10mm when the middle of the belt is pushed by a finger.
4. Tighten lock nut.
5. Tighten four mount bolts.

https://truckmanualshub.com/

Loading Deck

Lubrication

⚠CAUTION!

- **Follow the maintenance schedule to lubricate machine. Lack of lubrication may result in rust, excessive wear or seizure.**

NOTE

- **When using a manual grease pump, push handle five to six times. When handle becomes heavy, stop pushing.**
- **When using a pneumatic grease pump, charge for two to three seconds.**

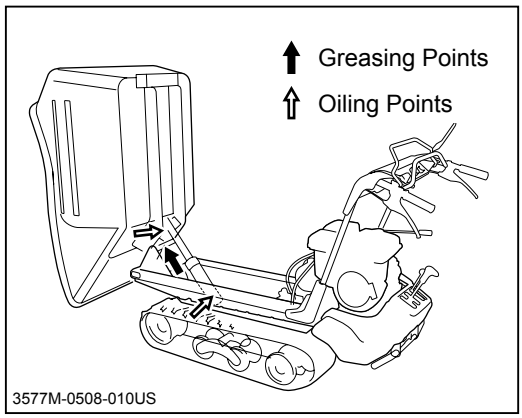

1. Raise loading deck and set safety lock plate to secure it.
2. With a grease pump, inject specified grease into greasing points.
3. Apply specified oil to oiling point(s).
4. Lower loading deck.

https://truckmanualshub.com/

After Use Care

⚠CAUTION!

- **Do not wash engine, control panel, electrical parts, or tank caps with air breather with running water; water may enter inside and cause rust or damage.**
- **Clean machine after use; leaving dirt or foreign objects may cause damage.**
- **Do not attempt to move machine when it becomes inoperable due to freezing.**

After Normal Use

1. Clean machine; wash off dirt, mud, and other foreign matter after use.
2. If machine is to be left outside, cover machine with a protective, water-proof covering after machine cools off.

After Cold Weather Use

1. Clean machine; wash off dirt, mud, and other foreign matter after use.
2. Park machine on a paved or firm, dry surface.
3. If machine is to be left outside, cover machine with a protective, water-proof covering after it cools off.

https://truckmanualshub.com/

Storage

⚠WARNING!

- **Fire hazard; do not store machine where there is a possiblity of ignition.**

⚠CAUTION!

- **Do not wash engine or control panel with running water; water may enter inside and cause rust or damage.**
- **Clean machine before storage; leaving dirt or foreign objects may cause rust or damage.**
- **Do not store machine in a humid, dusty, or hot place.**

1. Follow the instructions in **"Parking"** (page 24) to park machine.
2. Clean dirt off of machine.
3. Follow the instructions in "**Operator's Manual for the Engine"** to prepare engine for storage.
4. Remove battery from machine (electric start model).
5. Cover machine with a protective, water-proof covering after machine cools off.

NOTE

- **Battery dischages even when it is not in use. A battery may hold charge for a few months, but it is a good practice to charge the battery before it goes flat; it will extend the battery life.**
- **Refer to "Operator's Manual for the Engine", for detailed instructions on preparing engine for storage.**

https://truckmanualshub.com/

Troubleshooting

- **If any malfunction or abnormal condition is found, immediately stop using the machine and take an appropriate measure according to the Troubleshooting chart below. If the malfunction or abnormal condition is not listed in the chart, or the suggested measure does not solve the problem, consult with your CANYCOM representative.**

- **Some corrective measures listed below require special knowledge and/or equipment. Please contact your CANYCOM representative in such a case.**

Area	Malfunction	Possible Cause	Corrective Measure	Ref.
Engine	Engine does not start (starter does not turn - Electric start model only.)	Safety switch is functioning.	→Make sure drive clutch is in [Stop] position, and push to turn main switch to [Run] position.	Page 17
		Safety switch is malfunctioning or needs adjustment.	→Please contact your CANYCOM representative.	
	Engine does not start, or is difficult to start.	Out of fuel.	→Fill fuel.	Page 14
		Engine is flooded (too much fuel fed into the engine).	→Wait and restart.	
		Fuel valve lever is closed	→Open fuel valve lever.	Page 17
		Poor ignition due to a problem with spark plug.	→Clean or replace spark plug.	Page 38
		Other (other than the above).	→Follow the instructions in **"Starting"** to restart. If problem persists, please contact your CANYCOM representative.	Page 16

https://truckmanualshub.com/

Area	Malfunction	Possible Cause	Corrective Measure	Ref.
Engine	Engine stalls.	Engine is cold.	→Warm up engine.	
		Choke lever is in [Close] position.	→Move choke lever to [Open] position.	Page 19
		Other (other than the above).	→Please contact your CANYCOM representative.	
	Engine stops abruptly.	Out of fuel.	→Fill fuel.	Page 14
		Other (other than the above).	→Please contact your CANYCOM representative.	
	Irregular Idling	Air cleaner element is clogged	→Clean or replace air cleaner element.	Page 37
		Other (other than the above).	→Please contact your CANYCOM representative.	
	Poor power or acceleration	Bad fuel	→Change fuel.	
		Insufficient intake air (clogged air cleaner).	→Clean or replace air cleaner element.	Page 37
		Loose drive belt.	→Adjust drive belt.	Page 41
		Excessive load	→Reduce load.	
		Other (other than the above).	→Please contact your CANYCOM representative.	
	Irregular noise or vibration from or around the engine		→Please contact your CANYCOM representative.	
	Excessive oil consumption		→Please contact your CANYCOM representative.	
	Engine overheats	Insufficient amount of engine oil.	→Fill oil.	Page 36
		Other (other than the above).	→Please contact your CANYCOM representative.	
	Excessive Fuel consumption	Insufficient intake air (clogged air cleaner).	→Clean or replace air cleaner element.	Page 37
		Other (other than the above).	→Please contact your CANYCOM representative.	

https://truckmanualshub.com/

Area	Malfunction	Possible Cause	Corrective Measure	Ref.
Engine	Black smoke comes out of exhaust	Choke lever is in [Close] position.	→Move choke lever to [Open] position.	Page 19
		Air cleaner is clogged.	→Clean or replace air cleaner element.	Page 39
		Other (other than the above).	→Please contact your CANYCOM representative.	
	White or blue smoke comes out of exhaust	Bad fuel.	→Change fuel.	
		Wrong engine oil.	→Change oil.	Page 38
		Other (other than the above).	→Please contact your CANYCOM representative.	
	Accelerator lever is catching		→Please contact your CANYCOM representative.	
Drive Train	Machine does not move when clutch lever is in the [Run] position.	Transmission is not positively in the gear.	→Shift firmly.	
		Loose drive belt.	→Adjust drive belt	Page 41
		Other (other than the above).	→Follow instructions in **"Driving"** to drive. If problem persists, please contact your CANYCOM representative.	Page 21
	Clutch does not disengage positively.	Improperly adjusted drive belt.	→Adjust drive belt	Page 41
		Other (other than the above).	→Please contact your CANYCOM representative.	
	Drive belt slips.	Loose drive belt.	→Adjust drive belt	Page 41
		Other (other than the above).	→Please contact your CANYCOM representative.	
	Transmission jumps out of gear.	Transmission is not positively in the gear.	→Shift firmly.	
		Excessive load	→Reduce load.	
		Other (other than the above).	→Please contact your CANYCOM representative.	

https://truckmanualshub.com/

Area	Malfunction	Possible Cause	Corrective Measure	Ref.
Drive Train	Machine does not turn smoothly.	Improperly adjusted side clutch.	→Adjust side clutch	Page 43
		Other (other than the above).	→Please contact your CANYCOM representative.	
	Irregular noise or abnormal heat from roller, sprocket, or idler.		→Please contact your CANYCOM representative.	
Brake	Brake does not work well.	Improperly adjusted brake.	→Adjust brake.	Page 42
		Brake is wet with water.	→Apply brake a few times to dry.	
		Excessive load	→Reduce load.	
		Other (other than the above).	→Please contact your CANYCOM representative.	
Track	Track does not move smoothly.	Improperly adjusted track.	→Adjust track.	Page 39
		Other (other than the above).	→Please contact your CANYCOM representative.	
Hydraulic (Dump system)	Dump or turn does not work.	Insufficient or deteriorated hydraulic fluid.	→Add or change fluid.	Page 44
		Loose hydraulics belt.	→Adjust.	Page 45
		Other (other than the above).	→Please contact your CANYCOM representative.	

https://truckmanualshub.com/

Hauling

Loading and Unloading

⚠WARNING!

- **Park transporter (truck) on a level ground. Always use chocks to secure wheels.**
- **Do not allow bystandars to come close to machine or transporter when loading or unloading machine.**
- **Use only the loading ramps with sufficient strength (to withstand the combined weight of machine and operator), width (more than 2 times the width of track), and length (more than 4 times the height of loading deck of transporter), and have anti-slip ramp surfaces.**
- **Secure hooks of loading ramps firmly and flush with loading deck of transporter.**
- **Move slowly forward when loading onto, and move slowly backward when unloading off of transporter. Pay special care when going over the joint between loading deck and ramps; machine may tip.**
- **Do not turn on loading ramps. Machine may fall.**
- **Tie down machine securely. Make sure machine does not move around on loading deck.**

https://truckmanualshub.com/

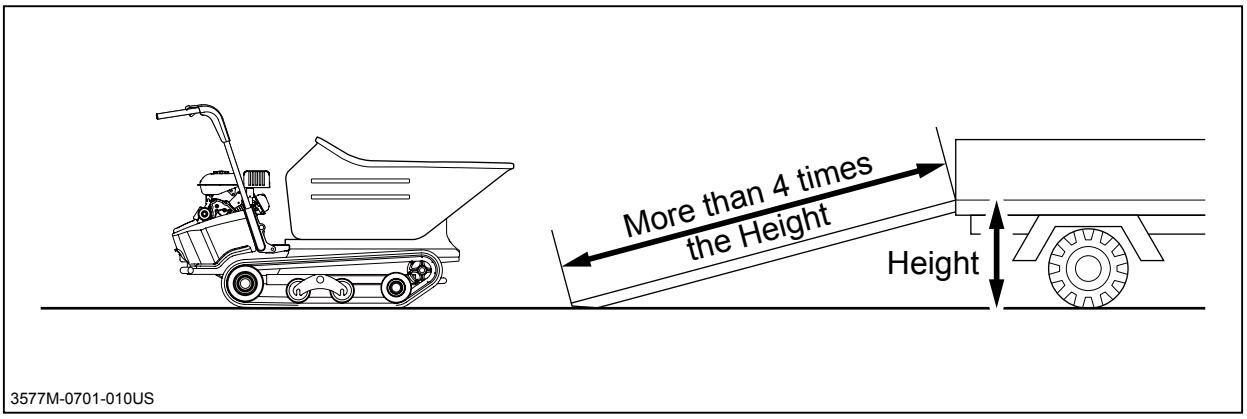

1. Park transporter on level ground. Secure wheels with chocks.
2. Place loading ramps. Secure hooks of ramps firmly and flush with loading deck of transporter.
3. Drive machine slowly forward onto loading deck.
4. Park machine according to the instructions in **"Parking"** (page 24). Secure machine firmly to loading deck of transporter with tie-down belts, rope, or wire.