https://truckmanualshub.com/

# SERVICE REPAIR

# MANUAL

## Hyster K019 (H300HD2, H330HD2, H360HD2, H360HD2-EC, H210-48HD2, H230-48HD2, H250-48HD2) Forklift Service Repair Manual

HYSTER

https://truckmanualshub.com/

# ELECTRICAL SYSTEM

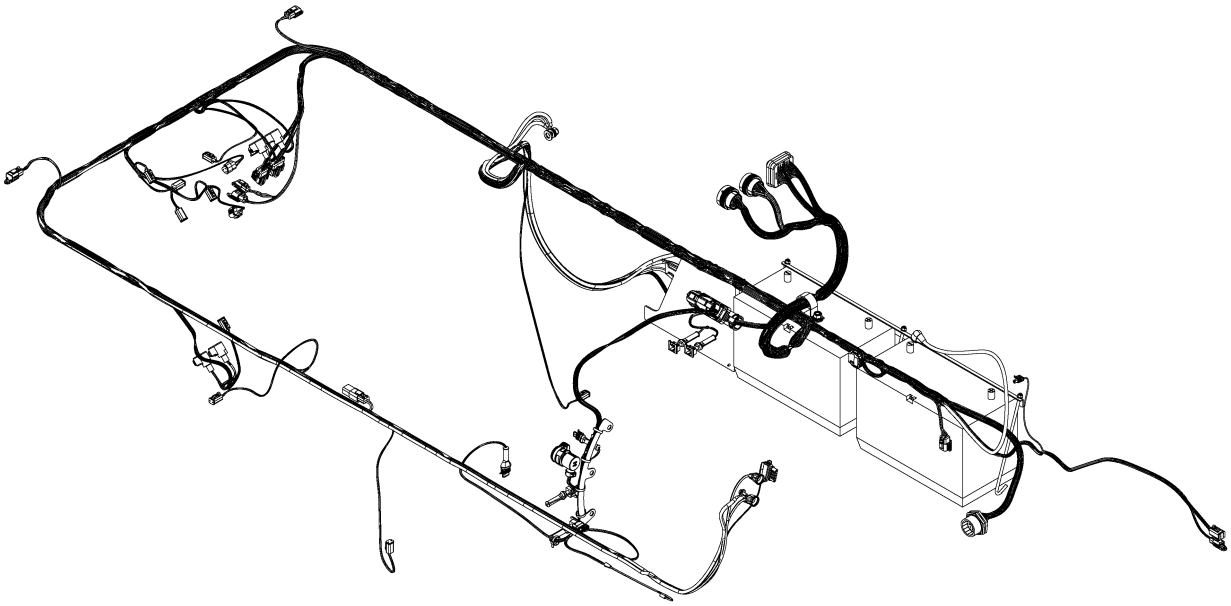

HYSTER

PART NO. 4133478

2200 SRM 1936

https://truckmanualshub.com/

# SAFETY PRECAUTIONS
# MAINTENANCE AND REPAIR

- The Service Manuals are updated on a regular basis, but may not reflect recent design changes to the product. Updated technical service information may be available from your local authorized Hyster® dealer. Service Manuals provide general guidelines for maintenance and service and are intended for use by trained and experienced technicians. Failure to properly maintain equipment or to follow instructions contained in the Service Manual could result in damage to the products, personal injury, property damage or death.
- When lifting parts or assemblies, make sure all slings, chains, or cables are correctly fastened, and that the load being lifted is balanced. Make sure the crane, cables, and chains have the capacity to support the weight of the load.
- Do not lift heavy parts by hand, use a lifting mechanism.
- Wear safety glasses.
- DISCONNECT THE BATTERY CONNECTOR before doing any maintenance or repair on electric lift trucks. Disconnect the battery ground cable on internal combustion lift trucks.
- Always use correct blocks to prevent the unit from rolling or falling. See HOW TO PUT THE LIFT TRUCK ON BLOCKS in the Operating Manual or the Periodic Maintenance section.
- Keep the unit clean and the working area clean and orderly.
- Use the correct tools for the job.
- Keep the tools clean and in good condition.
- Always use HYSTER APPROVED parts when making repairs. Replacement parts must meet or exceed the specifications of the original equipment manufacturer.
- Make sure all nuts, bolts, snap rings, and other fastening devices are removed before using force to remove parts.
- Always fasten a DO NOT OPERATE tag to the controls of the unit when making repairs, or if the unit needs repairs.
- Be sure to follow the WARNING and CAUTION notes in the instructions.
- Gasoline, Liquid Petroleum Gas (LPG), Compressed Natural Gas (CNG), and Diesel fuel are flammable. Be sure to follow the necessary safety precautions when handling these fuels and when working on these fuel systems.
- Batteries generate flammable gas when they are being charged. Keep fire and sparks away from the area. Make sure the area is well ventilated.

**NOTE:** The following symbols and words indicate safety information in this manual:

**WARNING**

**Indicates a hazardous situation which, if not avoided, could result in death or serious injury.**

**CAUTION**

**Indicates a hazardous situation which, if not avoided, could result in minor or moderate injury and property damage.**

**On the lift truck, the WARNING symbol and word are on orange background. The CAUTION symbol and word are on yellow background.**

https://truckmanualshub.com/



# TABLE OF CONTENTS

Series Code / Model Designation Reference Table ..... 1
General ..... 2
Electrical Schematic and System Description ..... 2
Electrical Schematic ..... 2
Schematic Location Number ..... 5
Electrical Components ..... 5
Electrical Wires ..... 5
Wire Identification Number ..... 5
Electrical Wire Colors ..... 7
Wire Harnesses ..... 7
Harness Interconnection ..... 10
Electrical Connectors ..... 10
Connector Types ..... 10
Connector Identification ..... 11
Connector Pin Numbers ..... 11
Connector Description ..... 11
Fuses ..... 11
Relays ..... 15
Flyback Diodes ..... 16
CAN (Controller Area Network) ..... 16
Troubleshooting ..... 18
Instrument Panel ..... 18
Instrument Panel Connectors ..... 20
LCD Display ..... 22
Hourmeter Mode ..... 22
Fault Code Mode ..... 22
Transmission Calibration ..... 22
Fault Code Log Mode ..... 22
Access ..... 23
Clear ..... 23
Exit ..... 23
General Fault Finding ..... 23
Preparation ..... 24
Define the Problem Area ..... 24
Identify Possible Causes of Malfunction ..... 24
Determine the Most Probable Cause ..... 24
Fuse Check ..... 24
Wiring Check ..... 24
Component Check ..... 24
Repair and Test ..... 24
Wire Harness Identification and Connector Location ..... 25
Frame Harness Connectors ..... 35
Mast ECH Harness Connectors ..... 37
Top Cab Harness Connectors ..... 39
Side Console Harness Connectors ..... 41
Cab Underfloor Harness Connectors ..... 44
Armrest Harness Connectors ..... 46
ECM Harness Connectors (Tier 3/Stage IIIA) ..... 48
EAS/ECM Harness Connectors (Tier 4F/Stage IV) ..... 49
DEF Tank Harness Connectors ..... 50

https://truckmanualshub.com/



# TABLE OF CONTENTS (Continued)

Powertrain Harness Connectors ..... 51
Hoodspine Harness Tier 3/Stage IIIA Connectors ..... 52
Hoodspine Harness Tier 4F/Stage IV Connectors ..... 53

This section is for the following models:

https://truckmanualshub.com/



# Series Code / Model Designation Reference Table

This table consist of the following Series Codes
used in this manual.

| Series Code | European Model | Americas Model |
|---|---|---|
| K019 | H13.00-16.00XM-6 | H210-250-48HD2, H300-360HD2 |
| K019EC | H6.00-7.00XM-12EC | H360HD2-EC |
| L007 | H8.00-12.00XM-6 | H190-280HD2, H250HD2 |
| B238 | H16.00XM-9, H18XM-7.5, H16XM-12, H18XM-9 | H360-36HD, H360-48HD |

https://truckmanualshub.com/



# General

This manual provides general information on the electrical system of B238, K019, and L007 lift trucks. This manual provides a link between the electrical schematic and the actual location of the electrical components on the lift truck.

The description and replacement procedures for the electrical system components are located in the relevant manual for the component. An example would be a transmission solenoid, which is shown in Transmission Repair (ZF-WG161) 1300SRM1456.

The actual electrical schematic drawings are shown in Diagrams 8000SRM1938 for L007 and K019, and in Diagrams 8000SRM1982 for B238.

# Electrical Schematic and System Description

## ELECTRICAL SCHEMATIC

The electrical schematic is laid out over several pages in Diagrams 8000SRM1938 for L007 and K019 and in Diagrams 8000SRM1982 for B238. Each page shows the electrical connection between the components, connectors, and wires.

The layout of the schematic is function driven, which means that each sheet represents one particular function or area as indicated by the title of the sheet. The index of the electrical schematic is shown in Table 1. Each page shows the electrical connection between the components, connectors, and wires.

https://truckmanualshub.com/



***Table 1. Electrical Schematic Index***

| Number | Title | Contents |
|---|---|---|
| 1 | Index | Sheet Title Index |
| 2 | Main Power | Battery, Key Switch |
| 3 | Engine Common / T3 | Engine controller and components |
| 4 | T4F/EAS | Fan Clutch, Tier 4F/Stage IV sensors |
| 5 | DEF | DEF Sensors, DEF Supply Module |
| 6 | XMSN | Transmission controller and components |
| 7 | Cab Lights | Cab roof and interior lights |
| 8 | Frame Lights | Front and tail lights, reverse alarm |
| 9 | Lights | Mast lights, flasher, jumper |
| 10 | Twist Module | Powered Cab Tilt |
| 11 | Monitoring | Instrument cluster, senders, alarms, diagnostics |
| 12 | OPS/Park Brake | Park brake switch and solenoid, suspension seat |
| 13 | Hydraulic Controls Cab | Hydraulic controller, levers, Operator Presence |
| 14 | Auxiliary Functions | Hydraulic Stop Lock-, Twist Lock-, Joystick switches |
| 15 | Wipers | Wipers and washers, switches, timer |
| 16 | Radio/Horn | Radio, Horn, DC converter, 12V plug |
| 17 | HVAC | Heating, Air Conditioning and Ventilation |
| 18 | Automatic Greasing | Lubrication, Pump and Switch |
| 19 | Front End FLT | Carriage, Slide Shift |
| 20 | ECH Attachment | Connection between Mast and ECH Attachment |
| 21 | Connector Overview | Connector codes, names and applied harness |
| 22-26 | Wire List | List of used wires and their functions |
| 27 | Fuses | List of used fuses and their functions |

https://truckmanualshub.com/



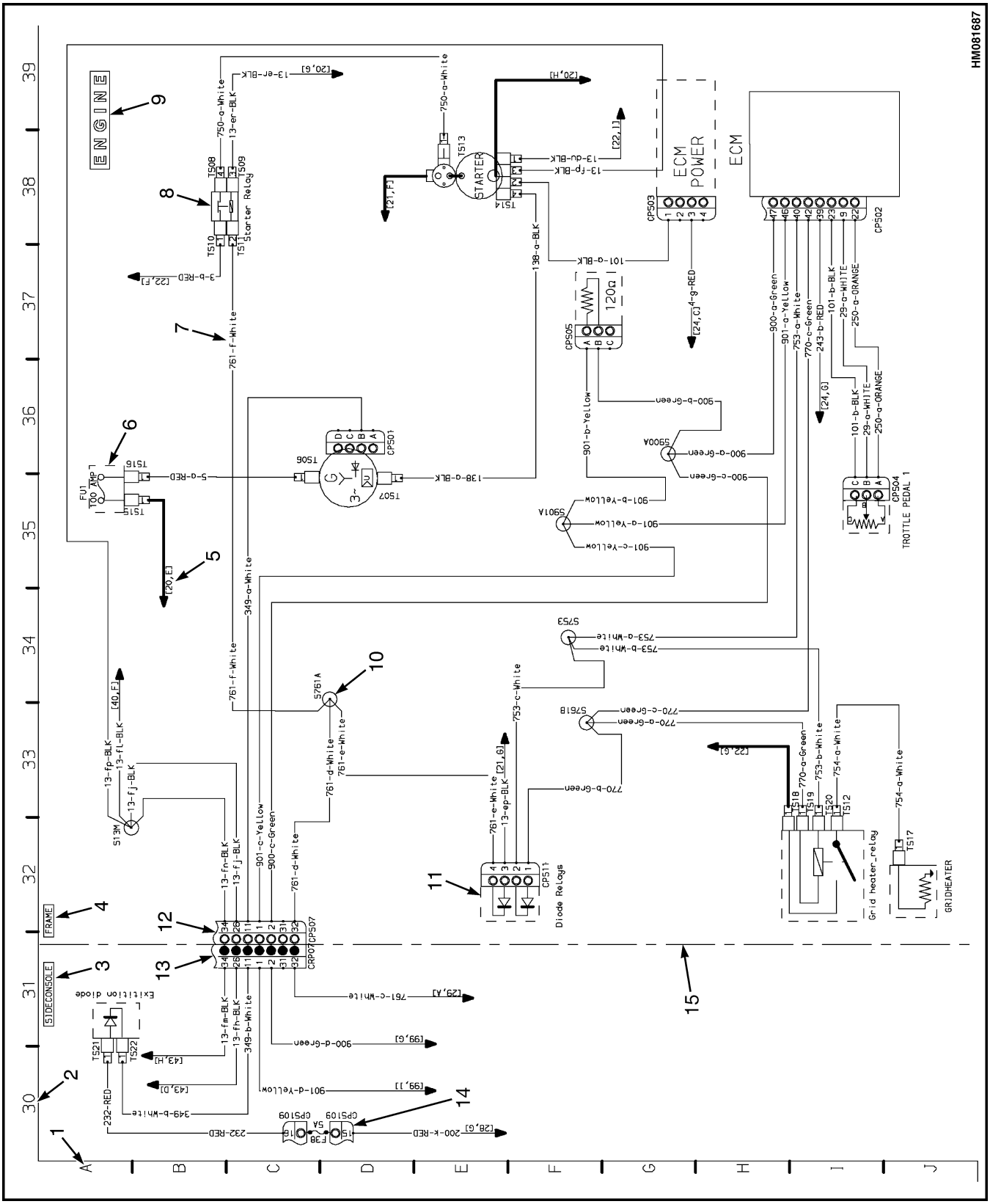


*Figure 1. Schematic Example*

https://truckmanualshub.com/

**Thanks very much for your reading,**

**Want to get more information,**

**Please click here, Then get the complete manual**

JustClickHere

**NOTE:**

**If there is no response to click on the link above, please download the PDF document first, and then click on it.**

**Have any questions please write to me:**
**admin@servicemanualperfect.com**

https://truckmanualshub.com/



***Legend for Figure 1***

1. ROW LETTER - A
2. COLUMN NUMBER - 30
3. WIRE HARNESS NAME - SIDE CONSOLE
4. WIRE HARNESS NAME - FRAME
5. WIRE CONTINUATION LOCATION- [20, E]
6. MEGA FUSE - 100 AMP
7. WIRE NUMBER AND COLOR - 761-F-WHITE
8. RELAY - STARTER
9. SHEET NAME - ENGINE
10. SPLICE - S761A
11. DIODE BLOCK
12. CONNECTOR - CPS07
13. CONNECTOR - CRP07
14. FUSE - 5 AMP
15. HARNESS DIVIDING LINE

## SCHEMATIC LOCATION NUMBER

The schematic is divided into rows with a letter from A to J and into columns numbered 0 to 9 for each sheet. See Figure 1.

The column numbering consists of the sheet number plus the column number. For example, column 57 is the 7th column on sheet 5.

The schematic location number is the combination of a row letter and column number, which allows quick identification of a point on the schematic. For example, [57,A] is the 7th column on sheet 5, row A.

## ELECTRICAL COMPONENTS

Electrical components are indicated by a symbol and a description that are placed close to each other on the schematic. An example is the starter relay on [38,C]. See Figure 1.

## ELECTRICAL WIRES

Each electrical wire is indicated by a solid line and has been identified with an identification number and a color indication of the wire insulation. If a wire continues on a different sheet, then the solid line ends with an arrow and receives in addition the schematic location number where this wire continues.

### Wire Identification Number

Each electrical wire in the electrical schematic has an identification number that is also printed on the insulation of the wires.

The wire identification numbers consist of a function ID number and when needed a suffix letter.

The function ID numbers are numbered from 1 through 999. Specific ranges of numbers are assigned for different function ID groups. See Table 2.

https://truckmanualshub.com/



***Table 2. Function ID Numbers***

| Function Group | Number Range |
|---|---|
| Dedicated Circuits | 001 - 100 |
| Grounds | 101 - 149 |
| Current sense ground | 150 - 199 |
| Switched B+ | 200 - 239 |
| Fused B+ | 240 - 249 |
| Regulated power 5V | 250 - 279 |
| Regulated power 12V | 280 - 299 |
| Analog inputs - hydraulics/mast | 300 - 319 |
| Analog inputs - chassis | 320 - 339 |
| Analog inputs - powertrain | 340 - 399 |
| Analog inputs - CAB/OHG | 400 - 419 |
| Additional analog inputs | 420 - 499 |
| Digital inputs - hydraulics/mast | 500 - 509 |
| Digital inputs - chassis | 510 - 539 |
| Digital inputs - powertrain | 540 - 559 |
| Digital inputs - CAB/OHG | 560 - 569 |
| Encoder inputs | 570 - 599 |
| Additional digital inputs | 600 - 699 |
| Digital outputs - hydraulics/mast | 700 - 719 |
| Digital outputs - chassis | 720 - 749 |
| Digital outputs - powertrain | 750 - 779 |
| Digital outputs - CAB/OHG | 780 - 799 |
| PWM outputs - hydraulics/mast | 800 - 829 |
| PWM outputs - chassis | 830 - 839 |
| PWM outputs - powertrain | 840 - 889 |
| PWM outputs - CAB/OHG | 890 - 899 |
| Communication (e.g., CAN) | 900 - 909 |
| Non-standard functions | 910 - 999 |

https://truckmanualshub.com/



Wires with the same number are interconnected through splices and connectors, and therefore have the same electrical function.

When a circuit is spliced into several wires, or when a wire passes a connector, each wire number receives the next unique suffix letter. An example is 42-a, 42-b.

To simplify the schematic, sometimes the identification has been omitted for a spliced function. It may concern an intersection between a switch and a splice, or a right-hand component operating simultaneously with a left hand component.

There is a wire number overview in Diagrams 8000SRM1938 for L007 and K019, and in Diagrams 8000SRM1982 for B238. In this overview each wire is listed with the wire harness it is part of, and with the connector identification number and pin numbers it connects to. The actual location of a connector code can be looked up in Connector Overview.

## Electrical Wire Colors

In addition to the function ID numbers on the electrical wires, different wire isolation colors are used to identify the circuit levels. See Table 3.

***Table 3. Electrical Wire Colors***

| Wire Color | Circuit Level |
|---|---|
| Red | Battery Level Power Circuits |
| Black | Heavy Current Grounds |
| Green | Signal Grounds |
| White | Other Circuits |
| Yellow (Twisted Pair) | CAN Hi |
| Green (Twisted Pair) | CAN Lo |
| Orange | 5 Volt |
| Pink | 12 Volt |

## Wire Harnesses

Wires are bound together in wire harnesses to secure against the adverse effects of vibration, abrasion and moisture. The description of wire harnesses follows from its location in the truck or from the functions it connects with.

Figure 2 provides an overview of the different harnesses that belong to the different truck options and their connector numbers.

Figure 14 through Figure 23 shows a 3D-view of most of the wire harnesses with their terminals and connectors. The legends for these figures mention the connector codes and connector description for verification. See also Wire Harness Identification and Connector Location.

https://truckmanualshub.com/



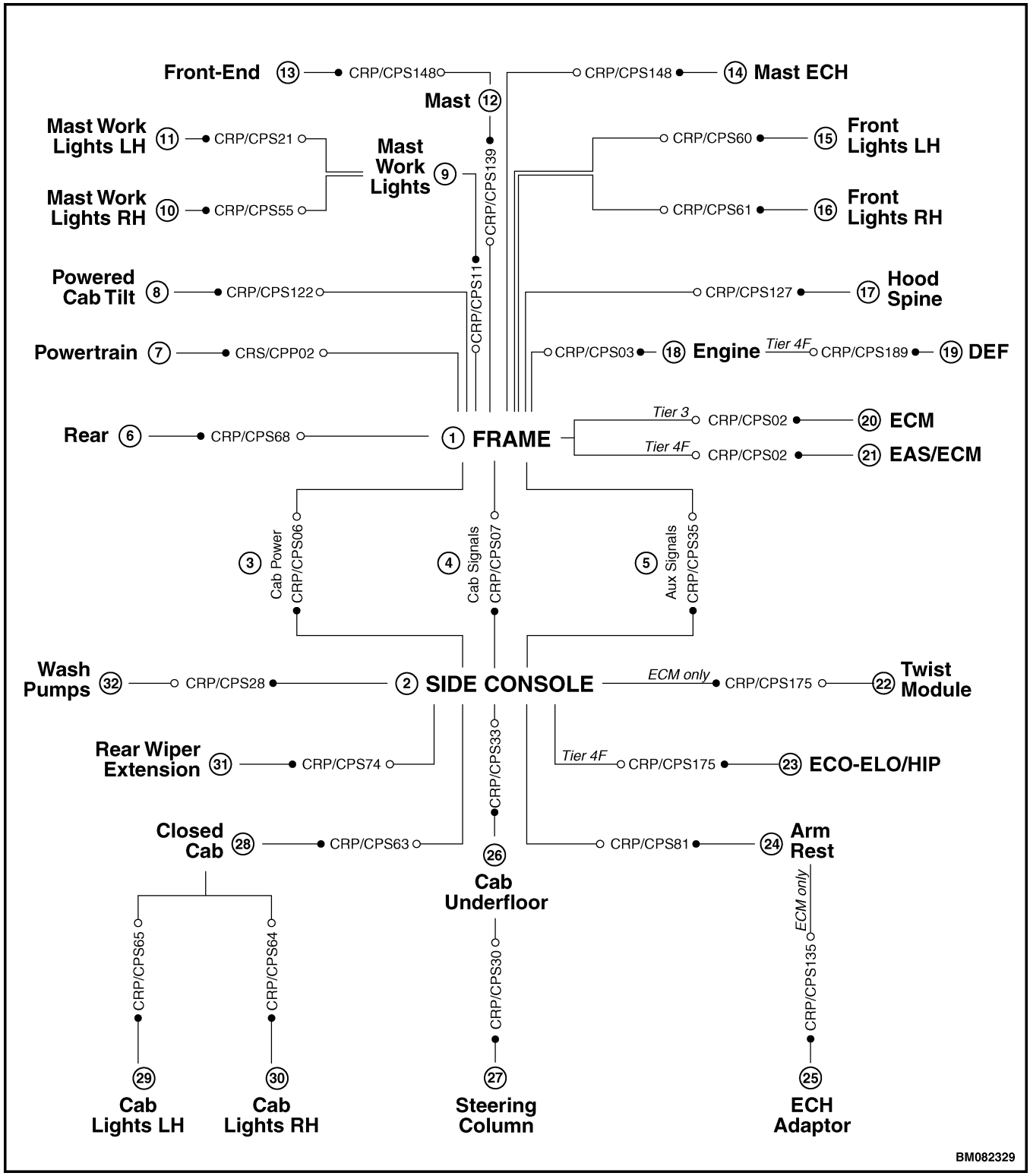


*Figure 2. Harnesses Overview*

https://truckmanualshub.com/



***Legend for Figure 2***

1. FRAME
2. SIDE CONSOLE
3. CAB POWER
4. CAB SIGNALS
5. AUX SIGNALS
6. REAR
7. POWERTRAIN
8. POWERED CAB TILT
9. MAST WORK LIGHTS
10. MAST WORK LIGHTS RH
11. MAST WORK LIGHTS LH
12. MAST
13. FRONT-END
14. MAST ECH
15. FRONT LIGHTS LH
16. FRONT LIGHTS RH
17. HOOD SPINE
18. ENGINE
19. DEF
20. ECM
21. EAS/ECM
22. TWIST MODULE
23. ECO-ELO/HIP
24. ARM REST
25. ECH ADAPTOR
26. CAB UNDERFLOOR
27. STEERING COLUMN
28. CLOSED CAB
29. CAB LIGHTS LH
30. CAB LIGHTS RH
31. REAR WIPER EXTENSION
32. WASH PUMPS

https://truckmanualshub.com/



Not shown in the harness overview and in the 3D-views are harnesses that are merely an extension cord for some of the connectors, or jumpers that connect between wires. The lay-out of these harnesses can be read from the electrical schematic. For the actual location of these harnesses, read the code of the mating connector from the electrical schematic and look up the figure and item number from Connector Overview. For example: the Closed Cab harness connects with the Cab Lights RH, which connects to CPS 64. See Top Cab Harness Connectors.

Not shown on the figures for the frame harnesses are the connectors for engine components such as sensors, fan clutch and grid heater relays.

There are four jumper options:

- Jumper Power Supply by Ignition provides power supply for side, tail and hazard lights when the ignition switch is turned to the ON position. See schematic location [99, H]. This harness is to be plugged into connector CPS651, which connects pin A with pin B.
- Jumper Power Supply by Battery directly provides power supply from the batteries to the circuit for side, tail and hazard lights, allowing activating these lights irrespective of the ignition switch position. See schematic location [98, H]. This harness is to be plugged into connector CPS650, which connects pin B with pin C.
- The strobe light jumper allows activation by ignition by connecting a jumper between pin number 2 and pin 3 of the strobe switch. See schematic location [72, L].
- Operator Presence Switch Jumper, which is removed when connecting the optional seat-belt sequencer.

### Harness Interconnection

On the electrical schematic the interconnection between two harnesses is indicated by a harness dividing line, which will run across the two mating harness connectors. See Figure 1, item 15.

## ELECTRICAL CONNECTORS

### Connector Types

Connector types are identified by letter codes. Multiple pin or socket connectors have a three letter code. Terminators, that are not isolated when detached, have a two letter code. The explanation of the letter codes is shown in Table 4.

***Table 4. Connector Types***

| Letter Code | Explanation |
|---|---|
| CRP | Connector Receptacle Pin |
| CRS | Connector Receptacle Socket |
| CPP | Connector Plug Pin |
| CPS | Connector Plug Socket |
| TS | Terminal Socket |
| TP | Terminal Pin |

https://truckmanualshub.com/



### Connector Identification

Each connector is identified by the letter code of the connector type and a unique identification number, e.g. CRP07.

Connectors have the same identification number if they interconnect between two wire harnesses, e.g. CRP07 interconnects with CPS07.

On the schematic a connector may be represented complete with all wires it normally contains, or partial, showing the few wires that are relevant for the particular page of the schematic.

A completely represented connector shows two rounded corners, as shown on Figure 1, item 11.

A partially represented connector has one curled corner, as shown on Figure 1, item 12.

As the wires in a connector will relate to different functions, portions of a connector can be divided over several schematic pages according the different electrical function of the wires. In general there is no relation between a connector and a schematic location. The only possibility to look up a schematic location is through the connector listing.

A connector is not shown on the schematic if the connector is an integral part of a component or if it does not have a minimum length of wire harness between the component and the connector. In these cases the schematic just shows the wire harness connector.

### Connector Pin Numbers

On the schematic the pin numbers are indicated by a number or letter inside the connector symbol, with the relevant wire ending at the relevant pin number.

On the connector itself pin numbers are shown in relief, but can be as small as 1 mm high. To read the numbers, clean the housing and provide sufficient lighting.

Pin numbers can be located on the inside of the connector next to the pin, on the backside of the connector next to the wires, or on the connector housing.

### Connector Description

For orientation purposes each connector has been provided with a description, which is shown in the connector overview in Table 11, and in the legend for the wire harnesses. The description matches the component it is attached with.

For connectors between harnesses the description is a combination of the two harness names. For instance CPS139: Frame-Mast. The first part of the description indicates the wire harness that the connector is part of, the second part indicates the wire harness that the connector connects with. An exception is the interconnection between frame and side console harness, which is through three connectors.

To avoid having three identical descriptions, the descriptions Cab Signals, Cab Power and Aux Signals have been assigned.

## FUSES

The grid heater, cab and alternator have separate fuses and relays that are located on the powerboard in the battery box attached to the fuel tank on the left-hand side of the truck. See Figure 3 and Table 5.

Four fuse panels are located behind the cover under the instrument panel. The four fuse panels contain the fuses that protect all other electrical circuits. See Figure 4 and Table 6.

On the inside of the instrument cover is a label that shows the location of the fuses in the four fuse panels.

In some cases a fuse is not adopted on the electrical schematic. It concerns fuses that are an integral part of a component, like retrofitted radio's or the Twist Module.

https://truckmanualshub.com/



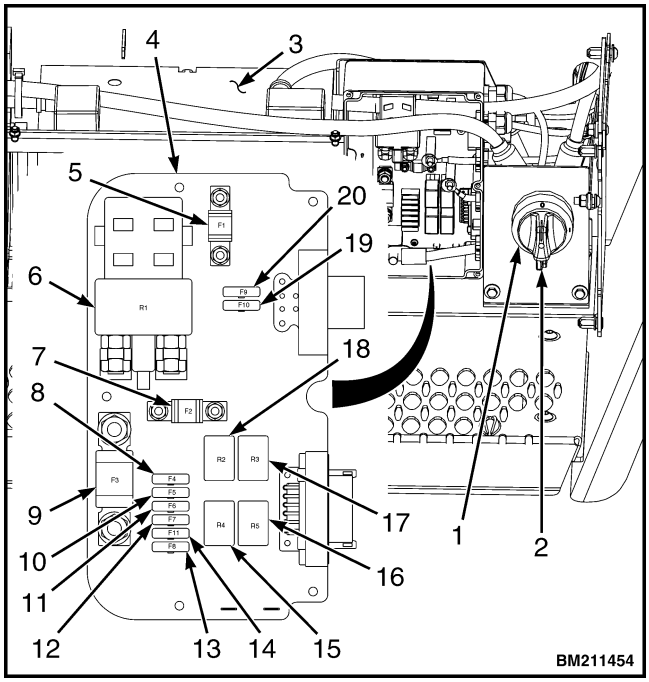


| Legend Item | Code | Description | Value | Connector | Location |
|---|---|---|---|---|---|
| 1. | | BATTERY DISCONNECT SWITCH | -- | -- | -- |
| 2. | | BATTERY DISCONNECT SWITCH LOCK | -- | -- | -- |
| 3. | | BATTERY | -- | -- | -- |
| 4. | | POWERBOARD | -- | -- | -- |
| 5. | F1 | ALTERNATOR | 125A | TS15/TS16 | [38,A] |
| 6. | R1 | RELAY GRID HEATER | -- | TS18/ CPS166 | [35,H] |
| 7. | F2 | CAB SUPPLY | 125A | TS10/TS01 | [22,D] |
| 8. | F4 | DEF HOSE HEATING | 15A | CPS166 | [52D] |
| 9. | F3 | GRID HEATER | 150A | F3 | [35,H] |
| 10. | F5 | SPARE | 10A | CPS166 | [53,C] |
| 11. | F6 | DEF MODULE HEATER | 10A | CPS166 | [53,D] |
| 12. | F7 | SPARE | 7.5A | CPS166 | [53,C] |
| 13. | F8 | SPARE | 10A | CPS166 | [53,C] |
| 14. | F11 | SPARE | 15A | CPS166 | [54,C] |
| 15. | R4 | RELAY DEF HOSE CPS146 | -- | CPS166 | [51,C] |
| 16. | R5 | RELAY DEF PUMP HEATER | -- | CPS166 | [52,D] |
| 17. | R3 | RELAY DEF HOSE CPS141 | -- | CPS166 | [51,D] |
| 18. | R2 | RELAY DEF HOSE CPS140 | -- | CPS166 | [52,C] |

https://truckmanualshub.com/



| Legend Item | Code | Description | Value | Connector | Location |
|---|---|---|---|---|---|
| 19. | F10 | ENGINE ECM SUPPLY | 30A | CPS178 | [33,H] |
| 20. | F9 | CAB TILT | 30A | CPS178 | [105,F] |

***Figure 3. Main Fuses and Main Relays***

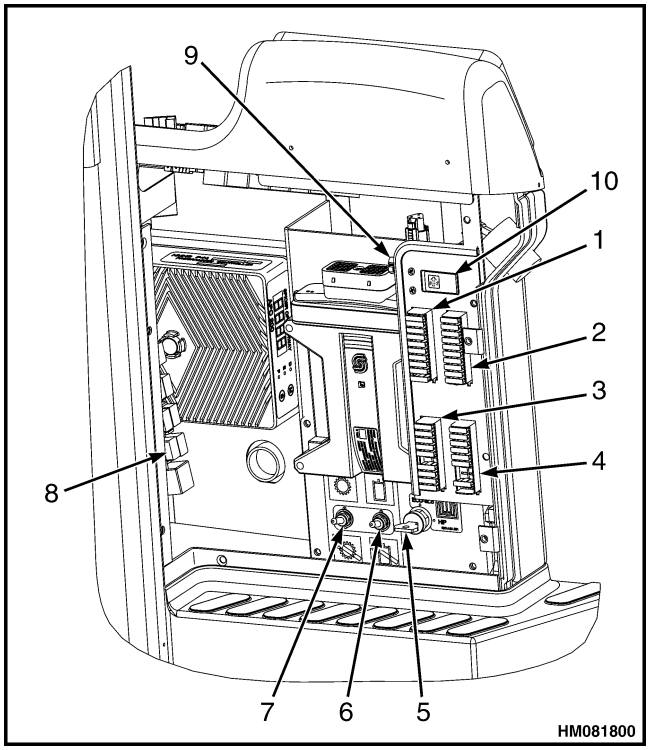


***Figure 4. Fuse Panel, Hydraulic Controller and Hydraulic Relays***

***Legend for Figure 4***

1. FUSE PANEL 1
2. FUSE PANEL 2
3. FUSE PANEL 3
4. FUSE PANEL 4
5. ECO-ELO SWITCH
6. HYDRAULIC SERVICE SWITCH
7. TRANSMISSION CALIBRATION SWITCH
8. RELAY PANEL (SEE FIGURE 5)
9. DIAGNOSTIC PLUG
10. REGENERATION SWITCH (TIER 4 ONLY)

***Table 6. Fuse Panel Overview***

| Fuse | Description | Value | Location |
|---|---|---|---|
| Fuse Panel 1 | | | |
| F1 | Engine Start | 30A | [25,B] |
| F2 | ECM Ignition | 5A | [31,E] |
| F3 | Low Brake Pressure Warning | 5A | [29,F] |
| F4 | Ignition | 7.5A | [29,F] |
| F5 | Transmission B+ | 7.5A | [64,C] |
| F6 | Hydraulic Controller | 30A | [138,E] |
| F7 | Attachment Controls | 15A | [145,A] |

https://truckmanualshub.com/



***Table 6. Fuse Panel Overview (Continued)***

| Fuse | Description | Value | Location |
|---|---|---|---|
| F8 | Park Brake Solenoid | 5A | [123,A] |
| F9 | Instrumentation | 10A | [120,B] |
| F10 | Alternator On | 5A | [34,A] |
| Fuse Panel 2 | | | |
| F11 | Flood Lights | 30A | [78,J] |
| F12 | Strobe Light B+ | 5A | [71,I] |
| F13 | Brake Lights | 10A | [82,H] |
| F14 | Front Drive Lights | 15A | [71,G] |
| F15 | Interior Lights | 5A | [71,H] |
| F16 | Mast/Attachment Lights | 15A | [81,E] |
| F17 | Direction Indicators | 10A | [97,D] |
| F18 | Side/Tail Lights | 10A | [82,E] |
| F19 | Rear Drive Lights | 10A | [79,I] |
| F20 | Reverse Lights/Alarm/Strobe | 10A | [79,I] |
| Fuse Panel 3 | | | |
| F21 | Front Screen Wash/Wipe | 10A | [152,B] |
| F22 | Roof Screen Wash/Wipe | 10A | [152,B] |
| F23 | Rear Screen Wash/Wipe | 10A | [152,C] |
| F24 | Horn | 10A | [166,C] |
| F25 | Sped Power Ignition | 5A | [168,G] |
| F26 | Automatic Greasing (opt) | 10A | [182,F] |
| F27 | Seat Suspension Compressor | 15A | [122,F] |
| F28 | Heater/AC/Ventilation Fan | 25A | [171,F] |
| F29 | AC Condenser, Fans | 30A | [179,H] |
| F30 | Parkbrake Warning Buzzer | 5A | [179,G] |
| Fuse Panel 4 | | | |
| F31 | Power Socket 12V DC | 10A | [168,H] |
| F32 | Radio/CB/Intercom | 10A | [168,H] |
| F33 | 12V Converter for Accessories | 10A | [166,H] |
| F34 | Hazard Lights | 10A | [97,D] |
| F35 | Sped Power B+ | 25A | [168,G] |
| F36 | 12V Relay | 3A | [168,H] |
| F37 | OPS System | 5A | [126,C] |
| F38 | EAS Sensor | 10A | [43,A] |
| F39 | Power Socket Switched 24V B+ | 15A | [168,G] |
| F40 | Power Socket 24V ign | 5A | [168,G] |

https://truckmanualshub.com/



## RELAYS

Except for the main relays shown on Figure 3, all relays are installed on the relay panel that is located left of the fuse panel. See Figure 5 and Table 7.

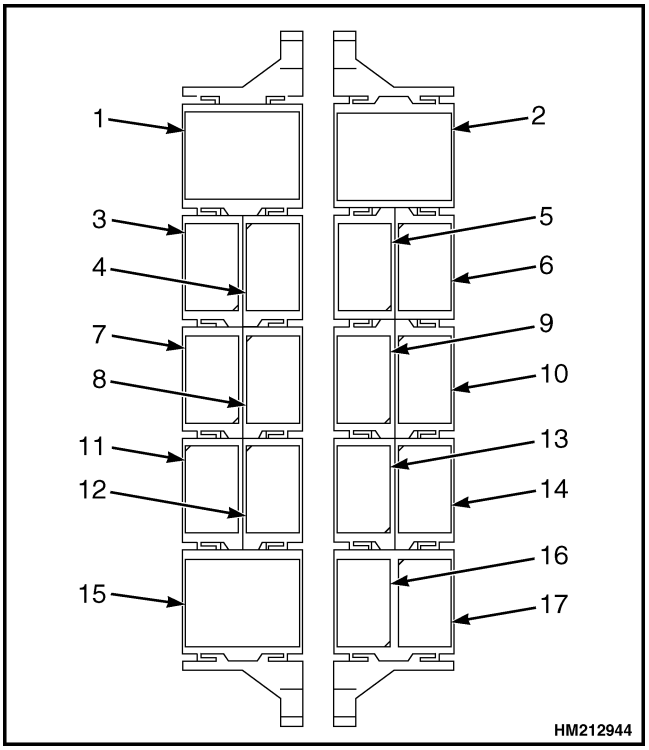


*Figure 5. Relay Panel*

*Table 7. Relays Overview*

| Item | Description | Connector | Location |
|---|---|---|---|
| 1 | Main Power | CPS16 | [27,E] |
| 2 | Lights | CPS174 | [97,B] |
| 3 | Horn | CPS84 | [166,C] |
| 4 | OPS | CPS84 | [136,I] |
| 5 | Start Enable | CPS15 | [31,D] |
| 6 | Ignition | CPS15 | [27,G] |
| 7 | Hydraulic Controller | CPS120 | [139,F] |
| 8 | Twistlock | CPS120 | [145,E] |
| 9 | Start Inhibit | CPS13 | [30,B] |
| 10 | Neutral | CPS13 | [30,B] |
| 11 | 12 Volt Relay | CPS108 | [165,F] |
| 12 | Override | CPS108 | [107,C] |
| 13 | AC3 | CPS36 | [179,G] |
| 14 | Reverse Lights & Alarm | CPS36 | [82,I] |
| 15 | Flasher Unit | CPS76 | [92,B] |
| 16 | AC1 | CPS115 | [179,F] |
| 17 | AC2 | CPS115 | [179,F] |

https://truckmanualshub.com/



## FLYBACK DIODES

Some components induce current surges when they are switched off. These surges can cause sparking of mechanical contacts in switches and relays, which results in premature erosion of these contacts. Flyback diodes prevent these symptoms by connecting the induced current surge to ground.

Always check functionality of a flyback diode when a switch or relay has failed. In most cases a failed diode will not conduct at all. Sometimes a failed diode causes a short circuit.

Replacement diodes are integrated in connectors that attach the correct diode polarity to the wire harnesses. Table 8 provides a complete listing of all flyback diodes fitted.

***Table 8. Flyback Diodes***

| Connector | Diode Description | Location | Harness Name | Figure Number |
|---|---|---|---|---|
| CPS17 | Diode_Main_Power | [25,A] ,[28,D] | Sideconsole | 17 |
| CPS172 | Diode_Neutral_Signal | [28,C] ,[30,D] | Sideconsole | 17 |
| CPS18 | Diode_Hydraulic_controller | [139,D] | Sideconsole | 17 |
| CPS236 | Diode_Cab_Tilt_Pump | [109,G] | Powered Cab Tilt | N/A |
| CPS34 | Diode_Calibration | [63,C] | Sideconsole | 17 |
| CPS39 | Lights_Diode | [123,C] ,[76,I] | Sideconsole | 17 |
| CPS54 | Backup_Diode | [88,G] | Rear | N/A |
| CPS82 | Diode_Horn | [164,D] | Cab Underfloor | 18 |

## CAN (CONTROLLER AREA NETWORK)

CAN bus is a standard for an electronic system that allows communication between different controllers without the need for a host computer.

The different controllers have their own controlled network of sensors, actuators and control devices. Functioning of these components cannot be influenced by other controllers unless the programming of a network controller specifically allows.

Each controller requires its own voltage supply to feed the controller and to provide signals to the components that belong to the controller network. Without voltage supply a controller does not function.

Communication occurs through sending and receiving signals. Each signal contains amongst others a code for the type of message (e.g. coolant temperature), the message itself (83°) and the ID of the controller (ECM) that has sent the signal. Each controller has been programmed to react only to certain messages from certain controllers. All other messages are ignored.

Only two wires (wire 900 and 901) are required for communication: The data wire and the data inverse wire. Integrity of signal transfer is verified by comparing the return signal of the data inverse wire with the original signal of the data wire.

https://truckmanualshub.com/



The can bus system includes the following controllers:

- Engine Control Module
- Transmission controller
- Hydraulic controller
- Instrument cluster
- Diagnostic connector*

(*) The diagnostic connector itself is not a controller. Instead, the IFAK cable that leads to the laptop computer contains the controller that will make contact with the CANbus system when plugged into the diagnostic connector.

All sensors that belong to one system controller are shown on one sheet of the electrical diagram.

The diagnostic connector itself is not a controller. Instead, the IFAK cable that leads to the laptop computer contains the controller that will make contact with the CANbus system when plugged into the diagnostic connector.

The optional Electronic Climate Control has an independent control system that does not communicate through can bus wires 900 to 903.

The CANbus inverse wire and data wire are twisted together to reduce sensitivity to electromagnetic interference. For the same purpose there are termination resistors at the extreme ends of the string of controllers. The CANbus system will not function if both 120 Ohm resistors are faulty or disconnected.

One of these two termination resistors is not visible on the schematic, because it is included in the ZF transmission controller.

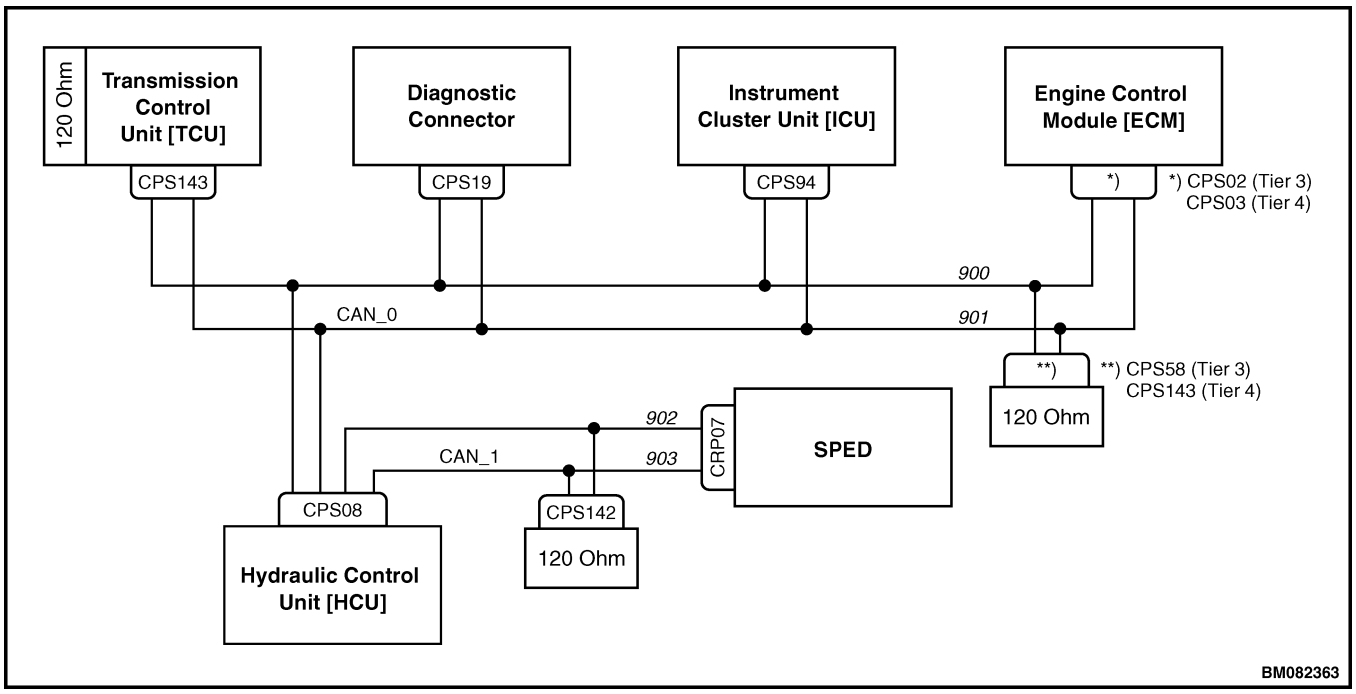


*Figure 6. CANbus Circuit*

https://truckmanualshub.com/



## Troubleshooting

Most controllers have a memory that retains codes for situations that occurred within their own controlled circuit. Also faults in the controller itself are stored as a fault code. Both the IFAK cable and the instrument cluster contain a controller that makes these codes visible on a lap top computer, respectively on the hour meter display. The explanation of these codes is shown on the different fault code tables for engine, transmission, hydraulic system and Electronic Climate Control.

The can bus connection itself can be verified by checking continuity of the data inverse wires 900 (green) and the data wires 901 (yellow), and by checking the 120 Ohm resistance value of the end resistor. For schematic location and actual location see Table 11.

Diagnostics of a faulty CAN bus system requires thorough knowledge and specific software. As controllers cannot be repaired, there is no other option than to replace a controller if it is found to be defective.

## INSTRUMENT PANEL

The lights and instruments that are shaded in Figure 7, Figure 8, and Table 9 are controlled by CAN-bus signals. The legend also shows the related pin numbers for connector CPS94.

To test functionality of the individual warning lights, switch the ignition from OFF to ON. All lights should light up for one second. As there are no serviceable components, the entire instrument panel must be replaced if found defective.

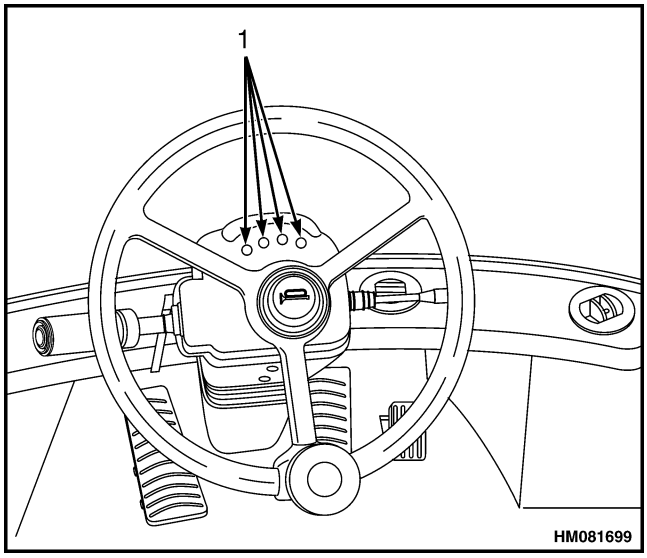


1. WARNING LIGHTS

***Figure 7. Central Warning Lights***

https://truckmanualshub.com/



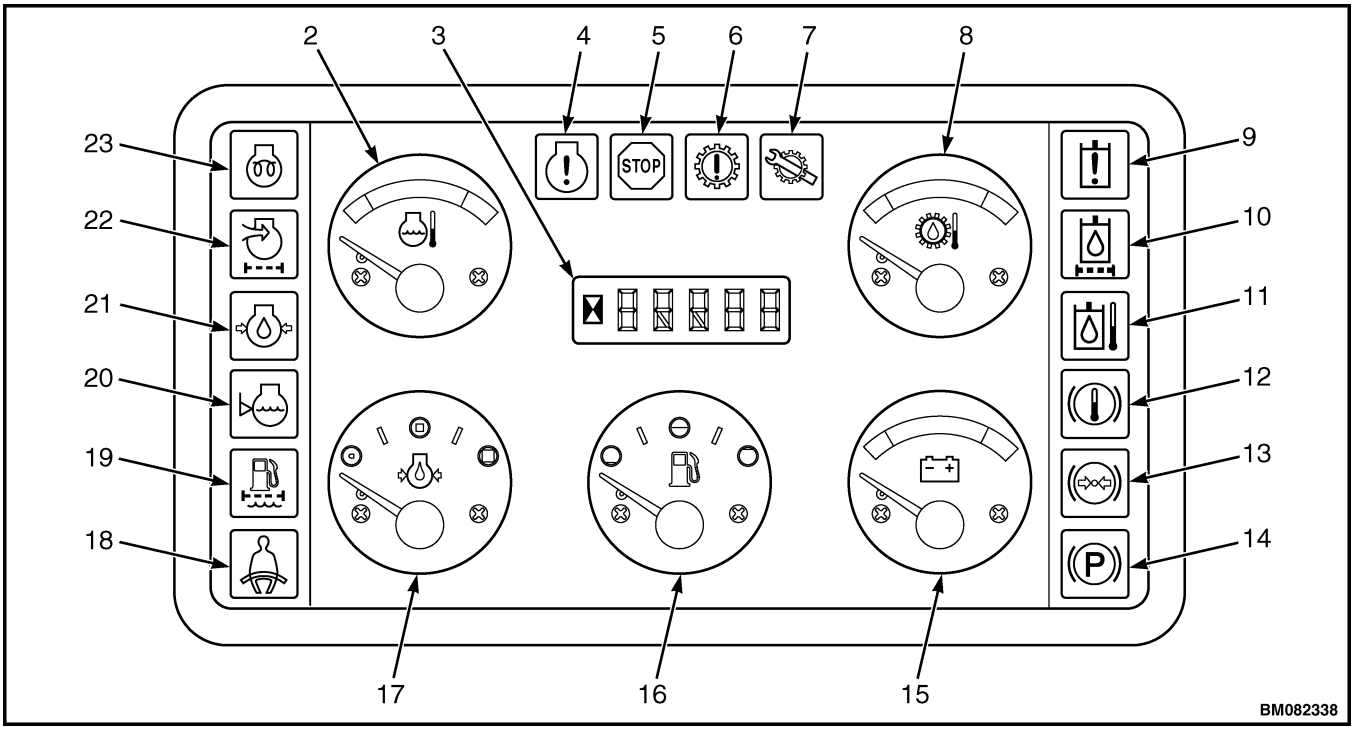


***Table 9. Legend for Central Warning Lights and Instrument Panel***

| Item | Description | Pin Number | Central Warning Light | Buzzer |
|---|---|---|---|---|
| 1 | Central Warning Lights | CAN | ---- | ---- |
| 2 | Engine Coolant Temperature Gauge & High Coolant Temperature Warning Light | CAN | ● | ● |
| 3 | Hour Meter / Active Fault code Display/ Fault Log Display | CAN | ---- | ---- |
| 4 | Engine System Fault/Malfunction Warning Light | CAN | ● | ---- |
| 5 | Engine System Urgent Stop Warning Light | CAN | ● | ● |
| 6 | Transmission System Fault/Malfunction Warning Light | CAN | ● | ● |
| 7 | Transmission Calibration Warning Light | 12 | ---- | ---- |
| 8 | Transmission (Sump) Oil Temperature Gauge & High Oil Temperature Warning Light | CAN | ● | ● |
| 9 | Hydraulic System Fault/Malfunction Warning Light | CAN | ● | ● |
| 10 | Hydraulic Oil Filter Restriction warning light | CAN | ● | |
| 11 | Hydraulic (Tank) Oil High Temperature Warning Light | CAN | ● | ● |
| 12 | Wet Brake High Oil Temperature Warning Light | CAN | ● | ● |
| 13 | Brake System Low Oil Pressure Warning Light | 11 | ● | ● |
| 14 | Parking Brake Warning Light | 7 | ---- | ---- |

https://truckmanualshub.com/



*Table 9. Legend for Central Warning Lights and Instrument Panel (Continued)*

| Item | Description | Pin Number | Central Warning Light | Buzzer |
|---|---|---|---|---|
| 15 | Battery Voltage Gauge & Low Battery Voltage Warning Light | 1 | ● | ---- |
| 16 | Fuel Level Gauge & Low Fuel Level Warning light | 24 | ● | ---- |
| 17 | **Tier 3/Stage IIIA**: Engine Oil Pressure Gauge & Low Oil Pressure Warning light | CAN | ● | ● |
| | **Tier 4F/Stage IV**: Engine Diesel Emission Fluid (DEF) Level Gauge & Low DEF Level Warning Light | CAN | ● | ---- |
| 18 | Seat Belt Warning Light | 2 | ---- | ---- |
| 19 | Engine Fuel Filter Water Separator Warning Light | CAN | ● | |
| 20 | Engine Coolant Low Level Warning Light | CAN | ● | ● |
| 21 | Engine Oil Low Pressure Warning Light | CAN | ● | ● |
| 22 | Engine Air Filter Restriction Warning Light | 20 | ● | ---- |
| 23 | Engine Wait To Start Warning Light | CAN | ---- | ---- |

*Figure 8. Central Warning Lights and Instrument Panel*

## Instrument Panel Connectors

The instrument panel connects with the system through connector CPS94, which is located at the rear of the instrument panel. See Figure 9 and Table 10.

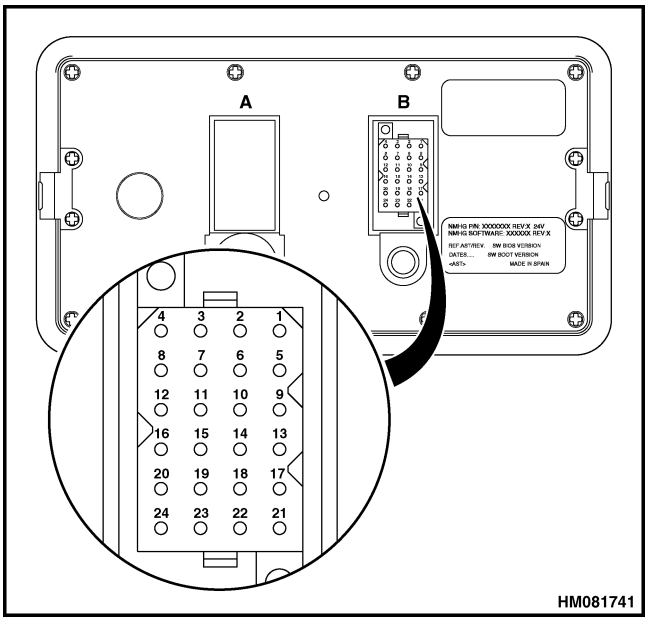


*Figure 9. Instrument Panel Connectors*

https://truckmanualshub.com/



***Table 10. Pin Descriptions***

| Pin | Description |
|---|---|
| 1 | Battery positive input (Diagnostic Switch) |
| 2 | Seat switch input |
| 3 | NOT USED |
| 4 | Ground |
| 5 | NOT USED |
| 6 | NOT USED |
| 7 | Park Brake Warning Light Input |
| 8 | NOT USED |
| 9 | NOT USED |
| 10 | NOT USED |
| 11 | Brake System Low Pressure Light |
| 12 | Transmission Calibration Warning Light |
| 13 | NOT USED |
| 14 | Can - H |
| 15 | Can - L |
| 16 | NOT USED |
| 17 | Buzzer output 10 mA |
| 18 | NOT USED |
| 19 | Central Warning Light output 25 mA |
| 20 | Engine Air Filter Restriction Warning Light input |
| 21 | NOT USED |
| 22 | NOT USED |
| 23 | NOT USED |
| 24 | Fuel Level Gauge input |

https://truckmanualshub.com/



## LCD DISPLAY

The LCD display can show values for different modes:

- Hourmeter Mode
- Fault Code Mode
- Transmission Calibration
- Fault Code Log Mode

### Hourmeter Mode

Under normal conditions an hourglass is shown, indicating that the LCD display shows engine running hours. The running hours are stored every 6 minutes when the engine is above 300 rpm. The maximum number of hours that can be displayed is 99,999 hours. See Figure 10.

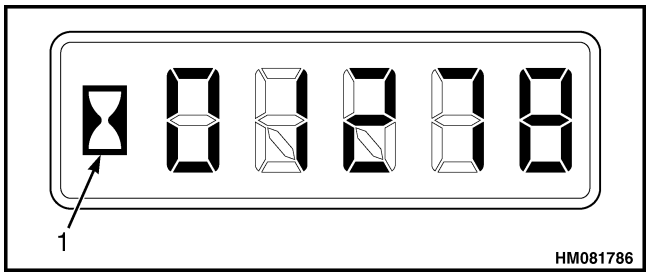


1. HOUR GLASS

*Figure 10. Hourmeter Display*

### Fault Code Mode

If a control system detects an error, the LCD display switches between Hour Meter and Error Mode every 2 seconds. Fault codes start with a letter that relate to the controller that signal the fault. Fault codes starting with ‘E’ refer to the engine, ‘T’ to the transmission, ‘H’ to hydraulics. See Figure 11.

An explanation and suggested corrective action for the fault codes is provided in below manuals:

- Cummins Engine Fault Code Guide 0600SRM1101 for engine fault codes.
- Transmission Operations and Diagnostics 1300SRM1455 for Transmission fault codes.
- Hydraulic Control System (L007) 1900SRM1935, Hydraulic Control System (K019) 1900SRM1964 and for B238 Hydraulic Control System 2200SRM1980 for hydraulic system fault codes.

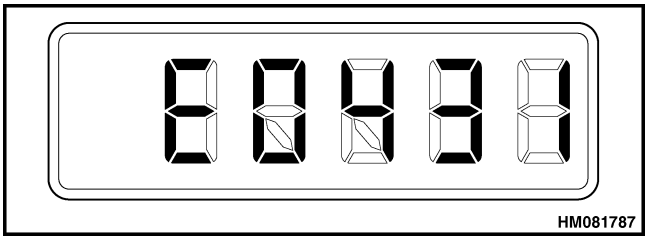


*Figure 11. LCD Display Engine Fault Code*

### Transmission Calibration

The display is a convenient replacement for a PC, when performing some of the transmission calibration and test procedures. See Figure 12. See Transmission Operations and Diagnostics 1300SRM1455 for a description of these procedures.

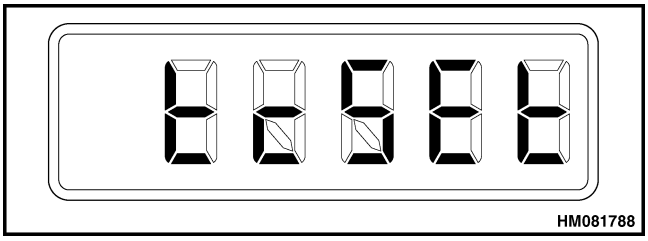


*Figure 12. LCD Display Transmission Calibration*

### Fault Code Log Mode

The instrument panel stores all fault codes received from the engine, transmission and hydraulic controller. The instrument panel does not store calibration and exceed codes from the transmission. Faults that have occurred can be reviewed at a later point in time by entering into the Fault Code Log Mode. The display will show Err_H. See Figure 13.

https://truckmanualshub.com/



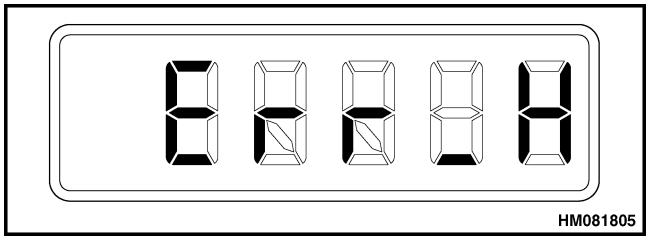


*Figure 13. LCD Display Fault Log Mode*

### Access

1. Apply the parking brake.
2. Turn the key switch into the ON position, but do not start the engine.
3. Press and release the service switch 3 times.

Press approximately for one second and release for one second. After each press-and-release cycle the display will show a number that increases with each cycle. After the third cycle the display will show a 3. The display is now in fault log mode.

When no faults have been recorded, the LCD display shows "clear."

Recorded faults are shown in batches of four numbers, each being displayed during three seconds.

The numbers represent the following:

- Error code
- Hourmeter reading at most recent occurrence of this fault
- Hourmeter reading at first occurrence of this fault
- Number of occurrences of this fault

The batches with fault code information are shown in sequence of occurrence. The most recently occurred fault code is shown first.

When all recorded fault codes have been shown, the display will continue to repeat these recorded fault codes until the user exists the fault log mode.

### Clear

To clear the fault codes logged in the display, proceed as follows:

1. Access into the fault log mode. See Access.
2. Press-and-release the service switch three more cycles. This is a repetition of the access procedure.

   The data erasing process will start and confirm successful completion by showing 'clear' on the display.

   If data-erasing is not successful, the display will continue to show fault code data.

### Exit

To exit the fault log mode, turn the ignition OFF and ON and leave ignition ON for more than 2 seconds.

An alternative procedure to return to normal mode is by releasing the park brake or by starting the engine.

## GENERAL FAULT FINDING

Below procedure is a guideline to facilitate fault finding in electrical circuits. Following the entire procedure is not always practical. Use common sense. For instance, if only one light out of a set of two has failed, you will first check the bulb of the failed light.

The procedure is not suited for electronic circuits like CANbus, which requires specific knowledge and software. Fortunately, defective electric components and connections that are part of a CANbus circuit will generate a fault code in the controller. The fault code guide provides further detail about the defect. Always verify presence of fault codes.

https://truckmanualshub.com/



## Preparation

1. Have the Electrical Schematic available. See Diagrams 8000SRM1938 for L007 and K019, and in Diagrams 8000SRM1982 for B238.
2. Identify the symptoms of the defect.
3. Establish how the relevant switches and levers should operate. See the Operating Manual.
4. Observe the condition of the truck. Look for signs of mechanical damage, overheating, unusual sounds, burn smells.

## Define the Problem Area

1. Determine the schematic location of the failed function. See Connector Overview.
2. Establish which sections of the failed function operate correctly. Identify these sections on the schematic.

## Identify Possible Causes of Malfunction

Make a list of every possible fault. Use your initial observations to help you writing down these faults.

## Determine the Most Probable Cause

1. Prioritize each of the listed possible faults.
2. Perform a Fuse Check, a Wiring Check and a Component Check for each of the listed faults.

## Fuse Check

Determine which fuse protects the component in the failed circuit. See Connector Overview to look up the related page of the schematic and find the fuse reference number.

Investigate if an overload condition or a short circuit caused the fuse to fail. First make repairs to solve the short circuit or overload condition. See Wiring Check.

Replace the fuse after the repair has been made. The actual location of the fuse is indicated on Figure 4.

## Wiring Check

Check signal presence at the component.

If no signal is present, check the signal at the next component closer to the battery (relay, fuse, switch, ignition switch). See Diagrams 8000SRM1938 for L007 and K019, and in Diagrams 8000SRM1982 for B238.

Check for damaged wire insulation in particular when there are erratic failures.

Check connection to battery ground. Establish virtually zero resistance for battery ground connections.

## Component Check

Isolate the component and check electrical functionality according the electric schematic.

Switches and connectors must have virtually zero resistance when closed.

Check for open circuits, short circuits and insulation breakdown.

Check if coils and relays do not overheat, which indicates a defect.

## Repair and Test

Remove the ground cable from the battery when doing repairs. Replace or repair the defective components after the cause of failure has been established. Replace the fuse found defective.

After the repair, do a test to make sure that the proper repair has been made and that there are no other faults in the circuit.

https://truckmanualshub.com/



# Wire Harness Identification and Connector Location

Below Figure 14 through Figure 23 show a 3D-view of most of the wire harnesses with their terminals and connectors. The legends for these figures mention the connector codes and connector description for verification. Related is Table 11, which indicates the item and figure number to find a connector or terminal.

***Table 11. Connector Overview***

| Connector | Description | Location | Harness |
|---|---|---|---|
| CPP02 | POWERTRAIN-FRAME | [36,D], [62,H] | Powertrain |
| CPP03 | Engine_ECM_Signals | [43,A] | EAS |
| CPP03 | Tier3_Adaptor | [37,J] | Tier3 Adaptor |
| CPP04 | EAS-DEF | [44,J], [54,J] | Powertrain |
| CPS02 | ECM_TIER3 | [39,H] | Tier3 Adaptor |
| CPS03 | DEF_SUPPLY_MODULE | [59,H] | DEF |
| CPS04 | Throttle_Pedal | [31,J] | Cab Underfloor |
| CPS05 | Ecm_Power_Tier3 | [39,J] | Tier3 Adaptor |
| CPS06 | Cab_Power | [24,F], [33,E], [81,A] | Frame |
| CPS07 | Cab_Signals | [125,A], [132,C], [108,A], [176,C], [185,F], [31,G], [32,C], [42,E], [63,E], [81,B] | Frame |
| CPS08 | Hydraulic_Controller | [132,B] | Sideconsole |
| CPS09 | Aux1_Lever | [139,J] | Armrest |
| CPS10 | Hydraullic_Temperature | [111,E] | Frame |
| CPS100 | Brake_light | [82,I] | Cab Underfloor |
| CPS101 | Lift_Solenoid1 | [133,J] | Hydraulics |
| CPS103 | Coolant_Level | [34,F] | Frame |
| CPS105 | Sideconsole-TWIST_Mod | [102,E] | Sideconsole |
| CPS106 | TWIST_Module | [102,I] | Twistmodule |
| CPS107 | DC/DC_Convertor | [167,I] | Sideconsole |
| CPS108 | Override/12VRelay | [107,C], [165,F] | Sideconsole |
| CPS109 | Fuses_31-40 | [124,C], [124,D], [165,H], [165,I], [167,H], [43,G], [96,D] | Sideconsole |
| CPS11 | Frame-Mast_Lts | [94,G] | Frame |
| CPS110 | Radio_Power | [161,H] | Closed Cab/Open Cab |
| CPS111 | Radio_Sound | [162,I] | Closed Cab/Open Cab |

https://truckmanualshub.com/



***Table 11. Connector Overview (Continued)***

| Connector | Description | Location | Harness |
|---|---|---|---|
| CPS112 | Tilt_Lever | [137,J] | Armrest |
| CPS113 | Lift_Lever | [136,J] | Armrest |
| CPS114 | Aux0_Lever | [138,J] | Armrest |
| CPS115 | Relays_AC | [178,F] | Sideconsole |
| CPS116 | HVAC_unit | [173,F] | Sideconsole |
| CPS117 | Sideconsole-AC_cond | [173,C] | Sideconsole |
| CPS118 | Twist_Locks | [142,I] | Armrest |
| CPS119 | Hydr. Stop | [142,J] | Armrest |
| CPS12 | Convertor_Temp | [61,J] | Powertrain |
| CPS120 | HYDR_CONTR/ TwistLocks | [138,F], [144,F] | Sideconsole |
| CPS122 | Frame-Cab_Tilt | [105,F] | Frame |
| CPS125 | Frame-Hydraulics | [130,F] | Frame-Hydraulics |
| CPS129 | Tilt_Solenoid | [132,J] | Hydraulics |
| CPS13 | Neutral/Start_inhibit | [29,B] | Sideconsole |
| CPS130 | Aux_Solenoid | [131,J] | Hydraulics |
| CPS131 | Accum_Charge_disable_Sol | [132,I] | Hydraulics |
| CPS132 | Lowering_Solenoid | [130,J] | Hydraulics |
| CPS133 | FAN_CLUTCH | [43,E] | EAS |
| CPS134 | CAN_termination_resistor | [49,A] | EAS |
| CPS135 | Switches_Joystick | [141,B] | Armrest |
| CPS136 | ECH_Mast-ECH_Attachment | [204,F] | ECH Mast |
| CPS137 | Aux2 | [140,F], [141,F] | Armrest |
| CPS138 | Aux3 | [140,G], [141,G] | Armrest |
| CPS139 | Frame-Mast | [149,G] | Frame |
| CPS14 | Key_Switch | [26,B] | Sideconsole |
| CPS140 | HOSE HEATING 1 | [56,H] | DEF |
| CPS141 | HOSE HEATING 2 | [56,H] | DEF |
| CPS142 | Sped_Signals | [137,F] | Sideconsole |
| CPS143 | XMSN_connector | [63,A], [65,I] | Sideconsole |
| CPS144 | Suspension_Seat | [120,G] | Armrest |
| CPS145 | Accessory_Socket_24V | [168,E] | Sideconsole |
| CPS146 | HOSE HEATING 3 | [56,G] | DEF |

https://truckmanualshub.com/



***Table 11. Connector Overview (Continued)***

| Connector | Description | Location | Harness |
|---|---|---|---|
| CPS147 | CAC_Temp | [35,F] | Hoodspine |
| CPS148 | Mast-Front_End | [193,E] | Mast |
| CPS149 | Aux 0 | [197,A], [197,F] | DFSSFP |
| CPS15 | Start_Enable/IGN | [28,G], [31,E] | Sideconsole |
| CPS150 | Aux 1 | [197,C], [197,G] | DFSSFP |
| CPS151 | Aux 2 | [197,B], [197,G] | DFSSFP |
| CPS152 | Aux 3 | [197,D], [197,H] | DFSSFP |
| CPS153 | SCR THERMISTOR CONTROLLER | [53,C] | EAS |
| CPS154 | DEF Sensors | [57,E] | DEF |
| CPS155 | OPS | [127,E] | Sideconsole |
| CPS156 | DOC_TEMP | [51,J] | EAS |
| CPS157 | NOx_Sensor_DOC | [52,J] | EAS |
| CPS158 | CAN_termination_resistor | [54,A] | DEF |
| CPS159 | NOx_Sensor_SCR | [53,J] | EAS |
| CPS16 | Main_Power_Relay | [26,E] | Sideconsole |
| CPS160 | XMSN_connector | [60,G] | Powertrain |
| CPS161 | Turbine_speed | [60,B] | Powertrain |
| CPS162 | XMSN_Filter_Switch | [60,J] | Powertrain |
| CPS163 | DEF_TANK_HEATING_VALVE | [56,F] | DEF |
| CPS164 | DEF DOSING MODULE | [49,J] | EAS |
| CPS166 | PDM | [35,H], [41,C] | Frame |
| CPS168 | TBAP Sensor to Engine | [59,J] | Frame |
| CPS169 | TBAP Sensor | [56,J] | Frame |
| CPS17 | Diode_Main_Power | [25,A], [27,D] | Sideconsole |
| CPS170 | PS_Feedback option | [144,F] | Sideconsole |
| CPS171 | Brake_Temperature_Sensor | [110,B] | Frame |
| CP172 | Diode_Neutral_Signal | [27,C], [29,D] | Sideconsole |
| CPS173 | Low_Brake_Pressure | [110,F] | Hydraulics |
| CPS174 | Light_Relay | [96,B] | Sideconsole |
| CPS175 | ECO-eLo/HiP | [102,I] | Sideconsole |

https://truckmanualshub.com/



***Table 11. Connector Overview (Continued)***

| Connector | Description | Location | Harness |
|---|---|---|---|
| CPS178 | Frame-PDM_box | [32,I], [104,F] | Frame |
| CPS179 | Inhibit_Aux1 | [139,J] | Armrest |
| CPS18 | Diode_Hydraulic_controller | [138,D] | Sideconsole |
| CPS180 | Alternator Connector | [40,D] | Frame |
| CPS181 | Lub_Display_Frame | [183,D] | Sideconsole |
| CPS182 | Lub_Display_Att | [184,D] | Sideconsole |
| CPS183 | LUBRICATION PUMP | [186,D] | Frame |
| CPS184 | LUBRICATION SWITCH | [187,D] | Frame |
| CPS185 | LUBRICATION SWITCH | [187,A] | Lubrication Switch |
| CPS186 | LUBRICATION PUMP | [186,A] | Lubrication Pump |
| CPS19 | Diag_Connector | [119,G] | Sideconsole |
| CPS20 | Washer_Front | [159,J] | Wash_Pumps |
| CPS200 | ZF_DIAG | [67,H] | Sideconsole |
| CPS21 | Mast_Lts-Mast_Lts_RH | [95,H] | Mast Work Lights |
| CPS22 | Engine_Speed | [60,C] | Powertrain |
| CPS23 | Output_Speed | [60,A] | Powertrain |
| CPS233 | Cab_Tilt_Switch | [105,H] | Powered Cab Tilt |
| CPS234 | Cab_Tilt | [108,I] | Powered Cab Tilt |
| CPS235 | Cab_Tilt_Pump | [106,I] | Powered Cab Tilt |
| CPS236 | Diode_Cab_Tilt_Pump | [108,F] | Powered Cab Tilt |
| CPS24 | Internal_Speed | [60,B] | Powertrain |
| CPS25 | Diagnostic_Switch | [119,B] | Sideconsole |
| CPS26 | SERVICE_SWITCH | [134,G] | Sideconsole |
| CPS27 | CALIBRATION_SWITCH | [62,B] | Sideconsole |
| CPS28 | SideConsole/ Wsh_Pumps | [155,G] | Sideconsole |
| CPS29 | Shift_Lever | [69,B] | Steer Column |
| CPS30 | Underfloor-SteerColumn | [116,I], [162,B], [69,D], [92,J] | Cab Underfloor |
| CPS31 | Monotrol_Pedal | [69,H] | Cab Underfloor |

https://truckmanualshub.com/



***Table 11. Connector Overview (Continued)***

| Connector | Description | Location | Harness |
|---|---|---|---|
| CPS32 | Inching_Pedal | [68,I] | Cab Underfloor |
| CPS33 | Sideconsole-Underfloor | [115,H], [154,G], [164,B], [26,I], [30,I], [67,G], [82,G], [91,G] | Sideconsole |
| CPS34 | Diode_Calibration | [62,C] | Sideconsole |
| CPS35 | Aux_Signals | [108,D], [113,D], [147,F], [42,E] | Frame |
| CPS36 | AC3/Rev_lts | [178,G], [81,I] | Sideconsole |
| CPS37 | Fuses_1-10 | [122,B], [137,E], [145,A], [144,A], [24,B], [24,C], [28,E], [28,F], [30,F], [31,A], [63,C], [119,B] | Sideconsole |
| CPS38 | Washer_Roof | [158,I] | Wash_Pumps |
| CPS39 | Lights_Diode | [123,C], [75,I] | Sideconsole |
| CPS40 | RH Rear Drive LIghts | [78,C] | Cablights |
| CPS41 | Outer Front FLood Lights | [78,C] | Cablights |
| CPS42 | Inner Front Flood Lights | [78,D] | Cablights |
| CPS43 | Rear_Drive_Lts | [78,F] | Cab Lights |
| CPS44 | Outer_Flood_Light | [78,F] | Cab Lights |
| CPS45 | Inner_Flood_Light | [78,G] | Cab Lights |
| CPS450 | Seat_Belt_Sequencer | [128,G] | Australian_OPS |
| CPS46 | 12V_Plug | [166,E] | Sideconsole |
| CPS47 | Beacon/Strobe_Switch | [72,J], [73,J] | Sideconsole |
| CPS48 | Flood/ RR_Drive_LTS_Switch | [76,G], [75,G] | Sideconsole |
| CPS49 | Front_Lts-Marker_Lts | [87,A] | Front Drive Light |
| CPS50 | FUSES_11-20 | [77,H], [77,I], [70,H], [70,I], [80,E], [81,E], [82,G], [82,H], [96,D] | Sideconsole |
| CPS51 | Fuses_21-30 | [121,F], [151,C], [165,C], [165,D], [168,F], [169,F], [170,F], [171,F], [178,H], [181,F] | Sideconsole |
| CPS52 | Side/ Front_Lights_Switch | [81,D], [81,E] | Sideconsole |
| CPS53 | Att_Lights_Switch | [81,F], [81,G] | Sideconsole |
| CPS54 | Backup_Diode | [84,E] | Rear |
| CPS55 | Mast_Lts-Mast_Lts_LH | [96,H] | Mast Work Lights |
| CPS56 | Drive_Light | [88,B] | Front Drive Light |

https://truckmanualshub.com/



***Table 11. Connector Overview (Continued)***

| Connector | Description | Location | Harness |
|---|---|---|---|
| CPS58 | CAN_termination_resistor | [39,F] | Tier3 Adaptor |
| CPS60 | Frame-LH_Front_Lights | [86,C] | Frame |
| CPS61 | Frame-RH_Front_Lights | [86,E] | Frame |
| CPS62 | Frame-Hydraulics | [42,F], [127,A], [131,F] | Frame |
| CPS63 | Closed_Cab-SideConsole | [153,H], [163,G], [172,D], [73,G] | Closed Cab/Open Cab |
| CPS64 | RH_Cab_Lights | [76,E] | Cab Lights |
| CPS65 | LH_Cab_Lights | [76,G] | Cab Lights |
| CPS650 | by_battery | [97,G] | 8800053 |
| CPS651 | by_ign | [99,G] | 8800054 |
| CPS66 | LH-Mas_Lts | [98,J] | Mast Light Extension |
| CPS660 | Container_Pos_Speed_Red | [103,B] | Sideconsole |
| CPS666 | OPS_Breakout | [124,G] | Sideconsole |
| CPS67 | Front_Lts-RH_Marker_Lts | [87,E] | Frame Lights |
| CPS68 | Frame-Rear | [84,I] | Frame |
| CPS69 | RH_Tail_lights | [87,I] | Rear |
| CPS70 | Eng_Shut-down_Jumper | [25,C], [27,C] | Sideconsole |
| CPS71 | Wiper_Timer | [152,F] | Sideconsole |
| CPS72 | LH_Tail_lights | [87,J] | Rear |
| CPS73 | SPED | [168,F] | Sideconsole |
| CPS74 | Sideconsole-Wiper_Rear | [150,G] | Sideconsole |
| CPS75 | Roof_Wiper | [154,J] | Closed Cab/Open Cab |
| CPS76 | Flasher_Unit | [90,B] | Sideconsole |
| CPS77 | Hazard_Switch | [91,D], [92,D] | Sideconsole |
| CPS78 | Front_Wiper | [156,I] | Cab Underfloor |
| CPS79 | RH-Mast_Lts | [98,J] | Mast Light Extension |
| CPS80 | Horn_Switch_Armrest | [168,C], [169,C] | Armrest |
| CPS81 | Armrest-Sideconsole | [122,G], [124,I], [136,G], [143,D], [155,D], [167,B] | Armrest |
| CPS82 | Diode_Horn | [163,D] | Cab Underfloor |

https://truckmanualshub.com/



***Table 11. Connector Overview (Continued)***

| Connector | Description | Location | Harness |
|---|---|---|---|
| CPS83 | Horn_Button | [160,B] | Steer Column |
| CPS84 | Seat_Switch/ Horn_Relay | [135,I], [166,C] | Sideconsole |
| CPS86 | Front_Wiper_Switch | [157,B], [158,B] | Armrest |
| CPS87 | REGEN_EN/ DISABLE_SW | [41,H], [41,I] | Sideconsole |
| CPS88 | WIF_Sensor | [36,E] | Frame |
| CPS89 | Front_Washer_Switch | [157,C], [158,C] | Armrest |
| CPS90 | Roof Wiper/ Washer_Switch | [157,E], [158,E] | Armrest |
| CPS91 | Rear Wiper/ Washer_Switch | [157,F], [158,F] | Armrest |
| CPS92 | Wiper_Rear | [151,H] | Rear Wiper Extension |
| CPS93 | Hoist_Pressure | [135,J] | Hydraulics |
| CPS94 | Instrument_Cluster | [118,A] | Sideconsole |
| CPS95 | Washer_Rear | [158,H] | Wash_Pumps |
| CPS96 | Map_Light | [71,I] | Sideconsole |
| CPS97 | Air_filter | [110,B] | Hoodspine |
| CPS98 | Parkbrake_Solenoid | [128,B] | Hydraulics |
| CPS99 | Lift_Solenoid2 | [133,J] | Hydraulics |
| CRP01 | AC-Clutch | [179,B] | Frame |
| CRP03 | ECM_T4 | [49,A] | EAS |
| CRP148 | DFSSFP | [194,G] | DFSSFP |
| CRP06 | Cab_Power | [24,F], [32,E], [81,A] | Sideconsole |
| CRP07 | Cab_Signals | [124,B], [132,C], [176,C], [185,F], [31,G], [31,C], [42,F], [63,E], [81,B], [108,A] | Sideconsole |
| CRP10 | Condensor_Unit | [170,B] | Closed Cab/Open Cab |
| CRP105 | TWIST_Mod-Sideconsole | [102,E] | Twistmodule |
| CRP11 | Mast_Lts-Frame | [94,G] | Mast Work Lights |
| CRP117 | AC_cond-Sideconsole | [172,C] | Closed Cab/Open Cab |
| CRP12 | ECM_Cross-over | [50,D] | EAS |
| CRP122 | Cab_Tilt-Frame | [106,F] | Powered Cab Tilt |
| CRP125 | Hydraulic-Frame | [130,F] | Hydraulic-Frame |
| CRP139 | Mast-Frame | [190,F] | Front End FLT |
| CPS139A | Mast-Frame | [200,F] | Front End CH |

https://truckmanualshub.com/



***Table 11. Connector Overview (Continued)***

| Connector | Description | Location | Harness |
|---|---|---|---|
| CRP142 | End_Resistor | [137,G] | Sideconsole |
| CRP148 | Front-End | [194,G] | Front End |
| CRP14 | Reverse_Light | [88,I], [89,G] | Tail Light |
| CRP15 | Rear Light | [88,I], [89,G] | Tail Light |
| CRP155 | OPS_JUMPER | [127,E] | OPS Jumper |
| CRP16 | Rear Light | [88,I], [89,G] | Tail Light |
| CRP17 | Rear LIght | [88,I], [89,G] | Tail Light |
| CRP175 | ECO-eLo/HIP | [102,H] | ECO-Elo/HIP |
| CRP18 | Rear Light | [88,I], [89,G] | Tail Light |
| CRP183 | LUBRICATION PUMP | [187,D] | Lubrication Pump |
| CRP184 | LUBRICATION SWITCH | [188,D] | Lubrication Switch |
| CRP21 | Mast_L-RH-Mast_Lts | [95,I] | Mast Light Extension |
| CRP28 | Wsh_Pumps-SideConsole | [155,G] | Wash_Pumps |
| CRP30 | SteerColumn-Underfloor | [116,I], [161,B], [69,D], [92,J] | Steer Column |
| CRP300 | BACKUP_ALARM | [84,F] | Rear |
| CRP33 | Underfloor-Sideconsole | [115,H], [154,G], [164,B], [26,I], [30,I], [67,G], [82,H], [91,G] | Cab Underfloor |
| CRP35 | Aux_Signals | [108,D], [114,D], [147,F], [42,B] | Sideconsole |
| CRP420 | Seat_Belt_Switch | [122,I] | Armrest |
| CRP440 | Seat_Switch | [122,J] | Armrest |
| CRP49 | LH_Marker_Lights-LH_Lts | [87,A] | Frame Lights |
| CRP55 | Mast_Lts_LH-Mas_Lts | [96,H] | Mast Light Extension |
| CRP60/61 | Front_Lights-Frame | [86,C], [86,E] | Front Drive Light |
| CRP62 | Hydraulics-Frame | [131,F], [127,A], [112,F] | Hydraulics |
| CRP63 | SideConsole-Closed_Cab | [153,G], [164,G], [173,D], [73,G] | Sideconsole |
| CRP64 | RH_Cab_Lights | [76,E] | Closed Cab/Open Cab |
| CRP65 | LH_Cab_Lights | [76,G] | Closed Cab/Open Cab |
| CRP650 | Lights_Jumper | [97,G] | Sideconsole |
| CRP660 | Speed_Lim_Jumper | [103,B] | Sideconsole |
| CRP67 | RH_Marker_Lights-RH_Lts | [87,E] | Side Indicator |
| CRP68 | Rear-Frame | [84,I] | Rear |

https://truckmanualshub.com/



***Table 11. Connector Overview (Continued)***

| Connector | Description | Location | Harness |
|---|---|---|---|
| CRP69/72 | Tail_Lights | [87,I] | Tail light |
| CRP70 | Eng_Shut-down_Jumper | [25,C], [27,C] | Sideconsole |
| CRP72 | LH_Tail_Lights | [87,J], [151,F] | Tail light |
| CRP74 | Wiper_Rear-Sideconsole | [150,G] | Rear Wiper Extension |
| CRP81 | Sideconsole-Armrest | [122,F], [124,I], [136,G], [143,D], [155,D], [166,B] | Sideconsole |
| CRP88 | WIF_Sensor | [39,F] | Tier3 Adapter |
| CRS01 | Parkbrake_Switch_Element | [120,B] | Sideconsole |
| CRS02 | FRAME-POWERTRAIN | [36,D], [62,H] | Powertrain |
| CRS03 | Frame-Engine | [36,J], [43,A] | Frame |
| CRS04 | DEF-EAS | [56,A] | DEF |
| TS01 | FUSE_CAB_125A | [22,B] | Frame |
| TS02 | Battery+ | [22,J] | Battery Cable + |
| TS03 | Battery- | [20,J] | Battery Cable - |
| TS04 | Battery+ | [21,J] | Battery Cable + |
| TS05 | Battery- | [21,J] | Battery Cable + |
| TS06 | Alternator_B+ | [39,D] | Frame |
| TS07 | Alternator_Ground | [39,D] | Battery Cable - |
| TS10 | Supply_PDM | [21,B] | Supply_PDM |
| TS100 | Ground_Startermotor | [37,E] | Battery Cable - |
| TS102 | Armrest_Ground | [167,D] | Armrest |
| TS103 | Armrest_Ground | [169,D] | Armrest |
| TS13 | Startermotor_Solenoid | [37,D] | Powertrain |
| TS14 | Ground_Startermotor | [36,A] | Battery Cable - |
| TS15 | Fuse_Alternator_125A | [39,A] | Battery Cable + |
| TS16 | Fuse_Alternator_125A | [38,A] | Frame |
| TS18 | Gridheater_Relay | [35,H] | Frame |
| TS19 | Grid_Heater | [36,H] | Frame |
| TS20 | Alternator_B+ | [39,D] | Frame |

https://truckmanualshub.com/



***Table 11. Connector Overview (Continued)***

| Connector | Description | Location | Harness |
|---|---|---|---|
| TS21 | Ground_Startermotor | [36,A] | Battery Cable - |
| TS22 | Buzzer | [125,B] | Side Console |
| TS23 | Groundpoint_Frame | [36,A] | Battery Cable - |
| TS24 | Groundpoint_Frame | [36,A] | Battery Cable - |
| TS25 | Buzzer | [125,B] | Side Console |
| TS38 | ECO-eLo/HIP 2 | [103,G] | ECO-Elo/HIP |
| TS34 | Inching_Switch | [25,J] | Cab Underfloor |
| TS35 | Inching_Switch | [25,J] | Cab Underfloor |
| TS31 | ECO-eLo/HIP 1 | [102,G] | ECO-Elo/HIP |
| TS40 | Groundpoint_Frame | [36,A] | Frame |
| TS41 | Fuel Sender | [110,C] | Frame |
| TS43 | RH_Interior_Light | [73,A] | Closed Cab/Open Cab |
| TS44 | RH_Interior_Light | [73,A] | Closed Cab/Open Cab |
| TS45 | LH_Interior_Light | [73,B] | Closed Cab/Open Cab |
| TS46 | LH_Interior_Light | [73,B] | Closed Cab/Open Cab |
| TS48 | Strobe_Light | [78,B] | Cab Lights |
| TS57 | RH_Indicator | [88,D] | Side Indicator |
| TS58 | RH_Side_Light | [88,D] | Side Indicator |
| TS59 | RH_Side/ Indicator_Ground | [88,D] | Side Indicator |
| TS60 | LH_Side/ Indicator_Ground | [88,B] | Side Indicator |
| TS61 | LH_Side_Light | [88,B] | Side Indicator |
| TS62 | LH_Side_Indicator_Light | [88,A] | Side Indicator |
| TS64 | Indicator_Switch_54 | [93,G] | Steer Column |
| TS65 | Strobe_Light | [78,E] | Cab Lights |
| TS66 | Indicator_Switch_L | [92,H] | Steer Column |
| TS67 | Indicator_Switch_R | [93,H] | Steer Column |
| TS68 | Horn | [163,E] | Cab Underfloor |
| TS69 | Horn | [163,E] | Cab Underfloor |
| TS76 | Fuel Sender + | [110,C] | Frame |

https://truckmanualshub.com/



***Table 11. Connector Overview (Continued)***

| Connector | Description | Location | Harness |
|---|---|---|---|
| TS77 | Starter_Motor+ | [37,D] | Battery Cable + |
| TS80 | Master_Warning | [117,J] | Steer Column |
| TS81 | Master_Warning | [117,J] | Steer Column |
| TS82 | Buzzer | [114,G] | Sideconsole |
| TS83 | Buzzer | [114,G] | Sideconsole |
| TS84 | Groundpoint_Frame | [36,A] | Frame |
| TS89 | Radio_Coms | [161,F] | Closed Cab/Open Cab |
| TS90 | Radio_Coms | [161,F] | Closed Cab/Open Cab |
| TS91 | Right_Speaker+ | [162,I] | Closed Cab/Open Cab |
| TS92 | Right_Speaker- | [162,I] | Closed Cab/Open Cab |
| TS93 | Left_Speaker+ | [163,I] | Closed Cab/Open Cab |
| TS94 | Left_Speaker- | [163,I] | Closed Cab/Open Cab |
| TS96 | Strobe_Light | [78,B] | Cab Lights |
| TS97 | Strobe_Light | [78,F] | Cab Lights |
| TS98 | Ventilation_Fan | [171,D] | Closed Cab/Open Cab |

## FRAME HARNESS CONNECTORS

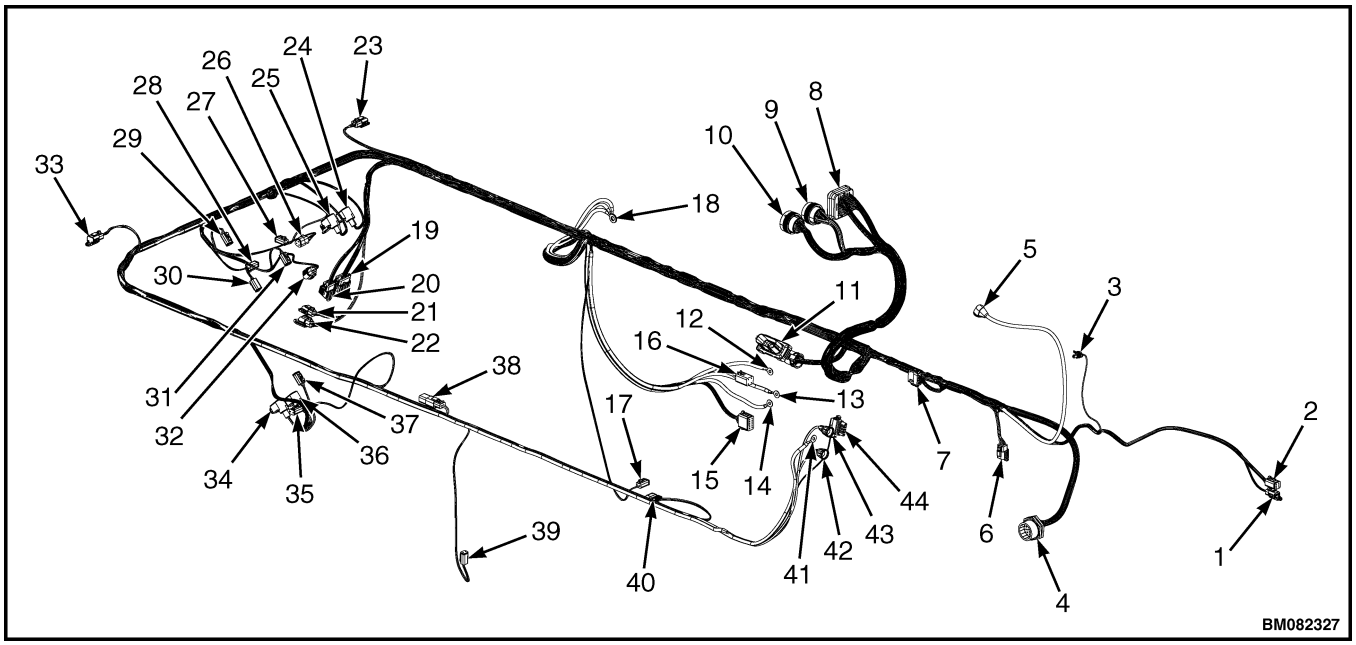


***Figure 14. Frame Harness Connectors***

https://truckmanualshub.com/



***Table 12. Legend for Frame Harness Connectors***

| Legend | Connector | Description |
|---|---|---|
| 1 | CPS184 | Lubrication Switch |
| 2 | CPS68 | Frame-Rear |
| 3 | CRP01 | AC Clutch |
| 4 | CRS03 | Frame-Engine |
| 5 | TS19 | Gridheater |
| 6 | CPS183 | Lubrication Pump |
| 7 | CPS127 | Frame-Hoodspine |
| 8 | CPS07 | Cab Signals |
| 9 | CPS06 | Cab Power |
| 10 | CPS35 | Aux Signals |
| 11 | CPP02 | Frame-Powertrain |
| 12 | TS01 | Fuse Cab 125A |
| 13 | TS18 | Gridheater Relay |
| 14 | TS15 | Fuse Alternator 125A |
| 15 | CPS166 | PDM |
| 16 | CPS178 | Frame-PDM Box |
| 17 | CPS10 | Hydraulic Temperature |
| 18 | TS84 | Groundpoint-Frame |
| | TS40 | Groundpoint-Frame |
| | TS14 | Ground-Startermotor |
| 19 | CPS148 | Frame-Mast |
| 20 | CPS141A | Frame-Mast EC |
| 21 | CPS11 | Frame-Mast_LTS |
| 22 | CPS102 | Lift & Tilt Sensor |
| 23 | CPS61 | Frame - RH Front Lights |
| 24 | CPS130 | Aux Solenoid |
| 25 | CPS99 | Lift Solenoid2 |
| 26 | CPS173 | Low Brake Pressure |
| 27 | CPS168 | Brake Light Switch |
| 28 | CPS171 | Brake Temperature Sensor |
| 29 | CPS98 | Park Brake Solenoid |
| 30 | CPS131 | Accumulator Charge Disable Solenoid |
| 31 | CPS132 | Lowering Solenoid |
| 32 | CPS93 | Hoist Pressure |
| 33 | CPS60 | Frame - LH Front Lights |
| 34 | CPS129 | Tilt Solenoid |

https://truckmanualshub.com/



*Table 12. Legend for Frame Harness Connectors (Continued)*

| Legend | Connector | Description |
|---|---|---|
| 35 | CPS167 | Fuel Sensor |
| 36 | CPS101 | Lift Solenoid1 |
| 37 | CPS169 | Pump Disable |
| 38 | CPS122 | Frame-Cab Tilt |
| 39 | CPS88 | WIF Sensor |
| 40 | CPS62 | TBAP Sensor to Engine |
| 41 | TS07 | Alternator-Ground |
| 42 | TS20 | Alternator B+ |
| 43 | TS06 | Alternator B+ |
| 44 | CPS180 | Alternator Connector |

## MAST ECH HARNESS CONNECTORS

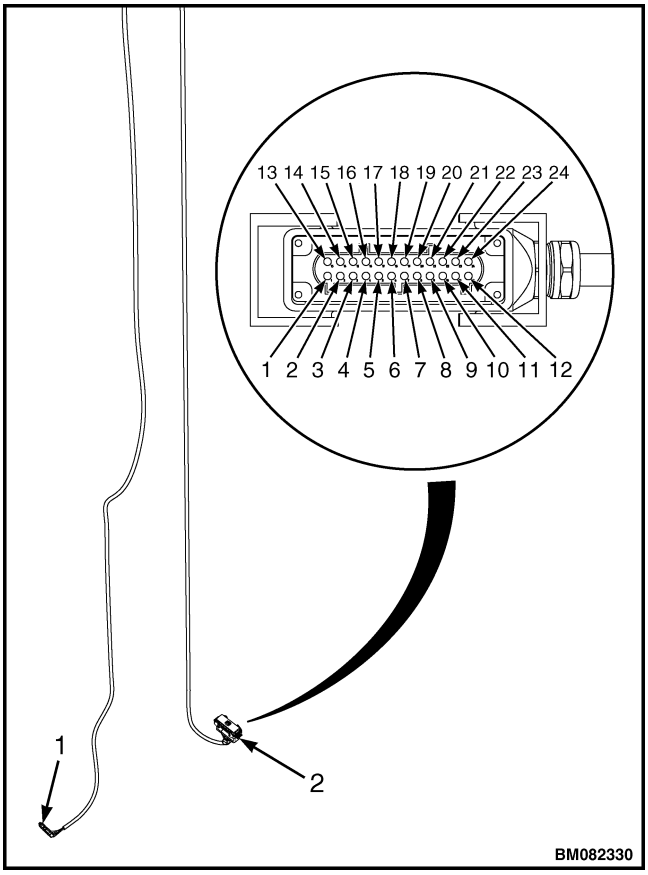


*Figure 15. Mast ECH Harness Connectors*

https://truckmanualshub.com/



***Table 13. Legend for Mast ECH Harness Connectors***

| Legend | Connector | Description |
|---|---|---|
| 1 | CPS141A | Mast ECH-Frame |
| 2 | CPS136 | ECH Mast-ECH Attachment, See Table 14 |

***Table 14. Mast ECH Harness Connector Pins***

| Pin | Description | Pin | Description |
|---|---|---|---|
| 1 | 24V DC | 13 | Seated LH |
| 2 | Ground | 14 | Seated LH |
| 3 | Extend | 15 | Twistlocks Lock |
| 4 | Retract | 16 | Twistlocks Unlock |
| 5 | Side Shift left | 17 | Spare |
| 6 | Side Shift right | 18 | Green/Yellow Spare |
| 7 | Work Lights | 19 | ---- |
| 8 | Lower Interrupt | 20 | ---- |
| 9 | Service Override | 21 | ---- |
| 10 | Pressure Signal | 22 | ---- |
| 11 | Twistlocks Locked | 23 | ---- |
| 12 | Not Locked Twistlocks | 24 | ---- |

https://truckmanualshub.com/



## TOP CAB HARNESS CONNECTORS

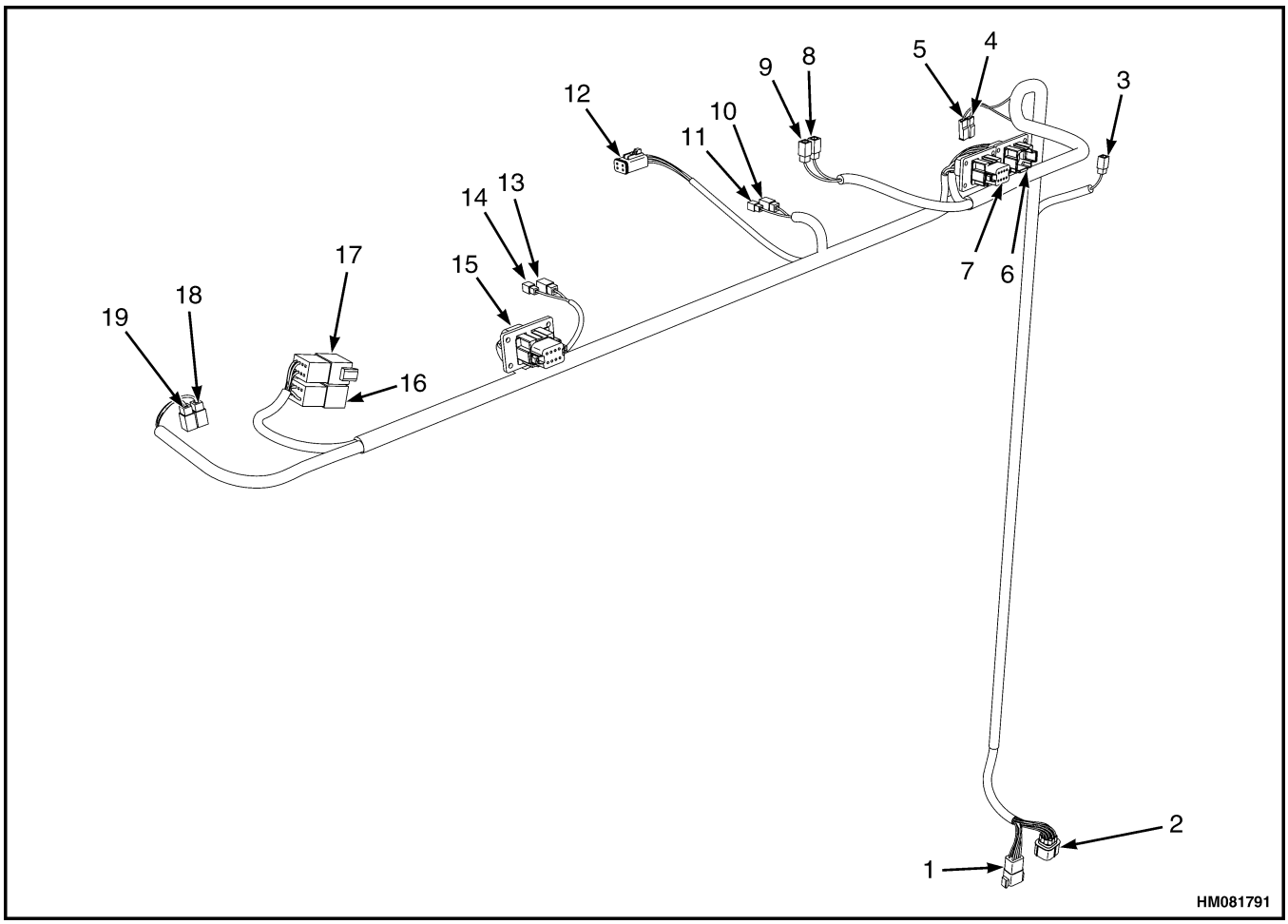


*Figure 16. Top Cab Harness Connectors*

https://truckmanualshub.com/



***Table 15. Top Cab Harness Connectors***

| Item | Connector | Description |
|---|---|---|
| 1 | CRP117 | AC Condenser – Side Console |
| 2 | CPS63 | Closed Cab – Side Console |
| 3 | TS98 | Ventilation Fan |
| 4 | TS44 | RH Interior Light |
| 5 | TS43 | RH Interior Light |
| 6 | CRP10 | Condenser Unit |
| 7 | CRP64 | RH Cab Lights |
| 8 | TS89 | Radio Coms |
| 9 | TS90 | Radio Coms |
| 10 | TS91 | Right Speaker |
| 11 | TS92 | Right Speaker |
| 12 | CPS75 | Roof Wiper |
| 13 | TS93 | Left Speaker |
| 14 | TS94 | Left Speaker |
| 15 | CRP65 | LH Cab Lights |
| 16 | CPS110 | Radio Power |
| 17 | CPS111 | Radio Sound |
| 18 | TS45 | LH Interior Lights |
| 19 | TS46 | LH Interior Lights |

https://truckmanualshub.com/



## SIDE CONSOLE HARNESS CONNECTORS

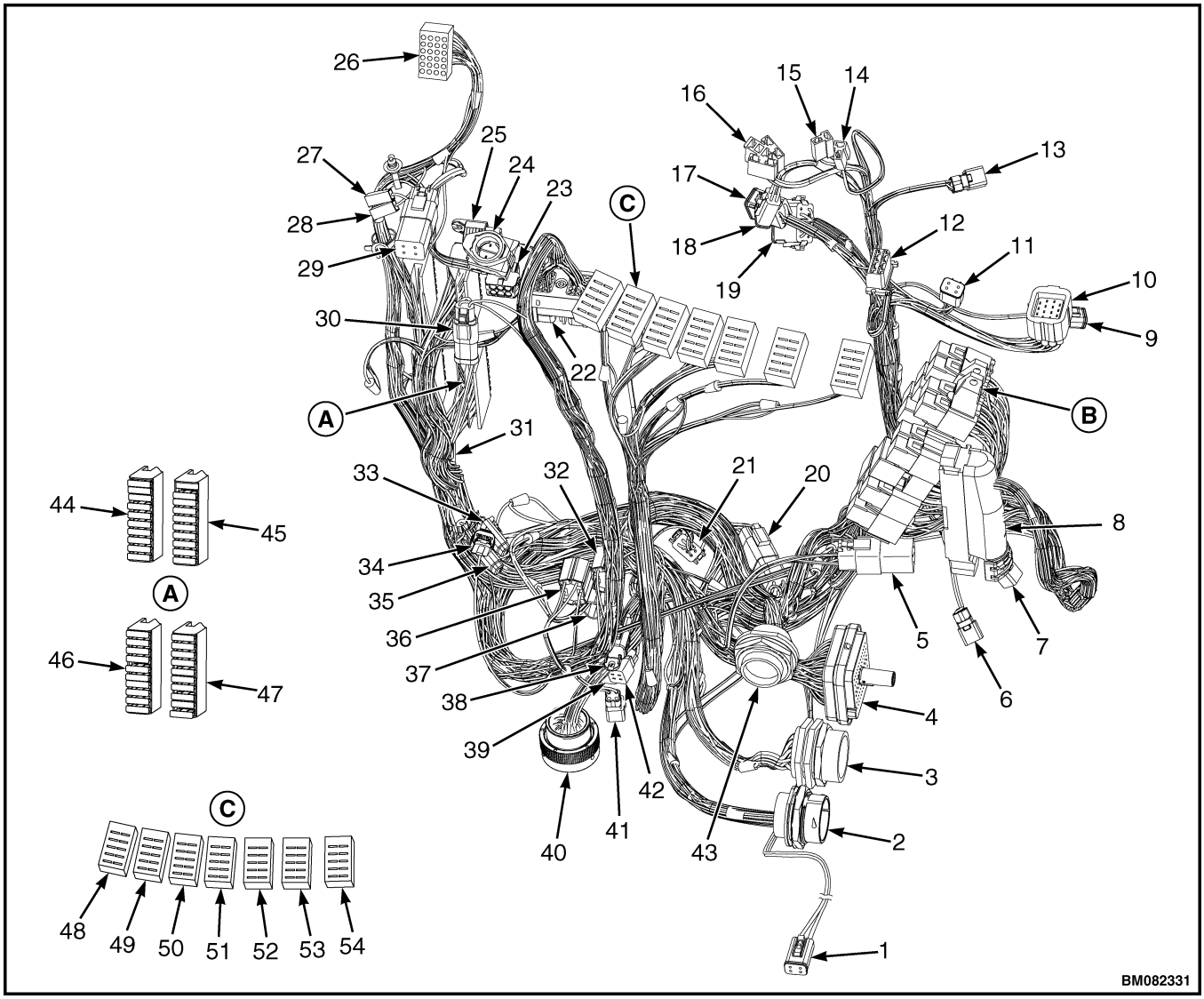


**A.** FUSES
**B.** RELAYS (SEE RELAYS)
**C.** SWITCHES

***Figure 17. Side Console Harness Connectors***

https://truckmanualshub.com/



***Table 16. Legend for Side Console Harness Connectors***

| Item | Connector | Description |
|---|---|---|
| 1 | CPS28 | Side Console Wash Pumps |
| 2 | CRP35 | Aux Signals |
| 3 | CRP06 | Cab Power |
| 4 | CRP07 | Cab Signals |
| 5 | CPS107 | DC/DC Convertor |
| 6 | CPS18 | Diode Hydraulic Controller |
| 7 | CPS17 | Diode Main Power |
| 8 | CPS143 | XMSN Connector |
| 9 | CPS666 | OPS Breakout |
| 10 | CRP63 | Side Console - Closed Cab |
| 11 | CPS74 | Side Console – Wiper Rear |
| 12 | CPS71 | Wiper Timer |
| 13 | CPS172 | Diode Neutral Timer |
| 14 | CPS46 | 12V Plug |
| 15 | CPS96 | Map Light |
| 16 | CPS14 | Key Switch |
| 17 | CSP117 | Side Console – AC Cond |
| 18 | CPS116 | HVAC Unit |
| 19 | CPS105 | Side Console – Twist Module |
| 20 | CRP70 | Eng Shutdown Jumper |
| 21 | CPS155 | OPS |
| 22 | CPS08 | Hydraulic Controller |
| 23 | CPS200 | ZF Diagnostics |
| 24 | CRS01 | Park Brake Switch Element |
| 25 | CRP19 | Diagnostics Connector |
| 26 | CPS94 | Instrument Cluster |
| 27 | TS82 | Buzzer |

https://truckmanualshub.com/



***Table 16. Legend for Side Console Harness Connectors (Continued)***

| Item | Connector | Description |
|---|---|---|
| 28 | TS83 | Buzzer |
| 29 | CPS73 | SPED |
| 30 | CRP142 | CAN End Resistor |
| 31 | CRP145 | Accessory Socket 24V |
| 32 | CPS27 | Calibration Switch |
| 33 | CPS182 | Lubrication Display Attachment |
| 34 | CRP175 | ECO-eLO/HiP |
| 35 | CPS181 | Lubrication Display Frame |
| 36 | CPS26 | Service Switch |
| 37 | CRP650 | Lights Jumper |
| 38 | CPS170 | PS Feedback Option |
| 39 | CRP660 | Speed Limiter Jumper |
| 40 | CPS33 | Side Console - Underfloor |
| 41 | CRP34 | Diode Calibration |
| 42 | CPS39 | Lights Diode |
| 43 | CRP81 | Side Console - Arm Rest |
| 44 | CPS37 | Fuses 1-10 |
| 45 | CPS50 | Fuses 11-20 |
| 46 | CPS51 | Fuses 21-30 |
| 47 | CPS109 | Fuses 31-40 |
| 48 | CPS53 | Attachment Lights Switch |
| 49 | CPS52 | Side/Front Lights Switch |
| 50 | CPS48 | Flood/Rear Drive Lights Switch |
| 51 | CPS47 | Beacon/Strobe Switch |
| 52 | CPS77 | Hazard Switch |
| 53 | CPS87 | Regeneration Enable/Disable Switch |
| 54 | CPS25 | Diagnostic Switch |

https://truckmanualshub.com/



## CAB UNDERFLOOR HARNESS CONNECTORS

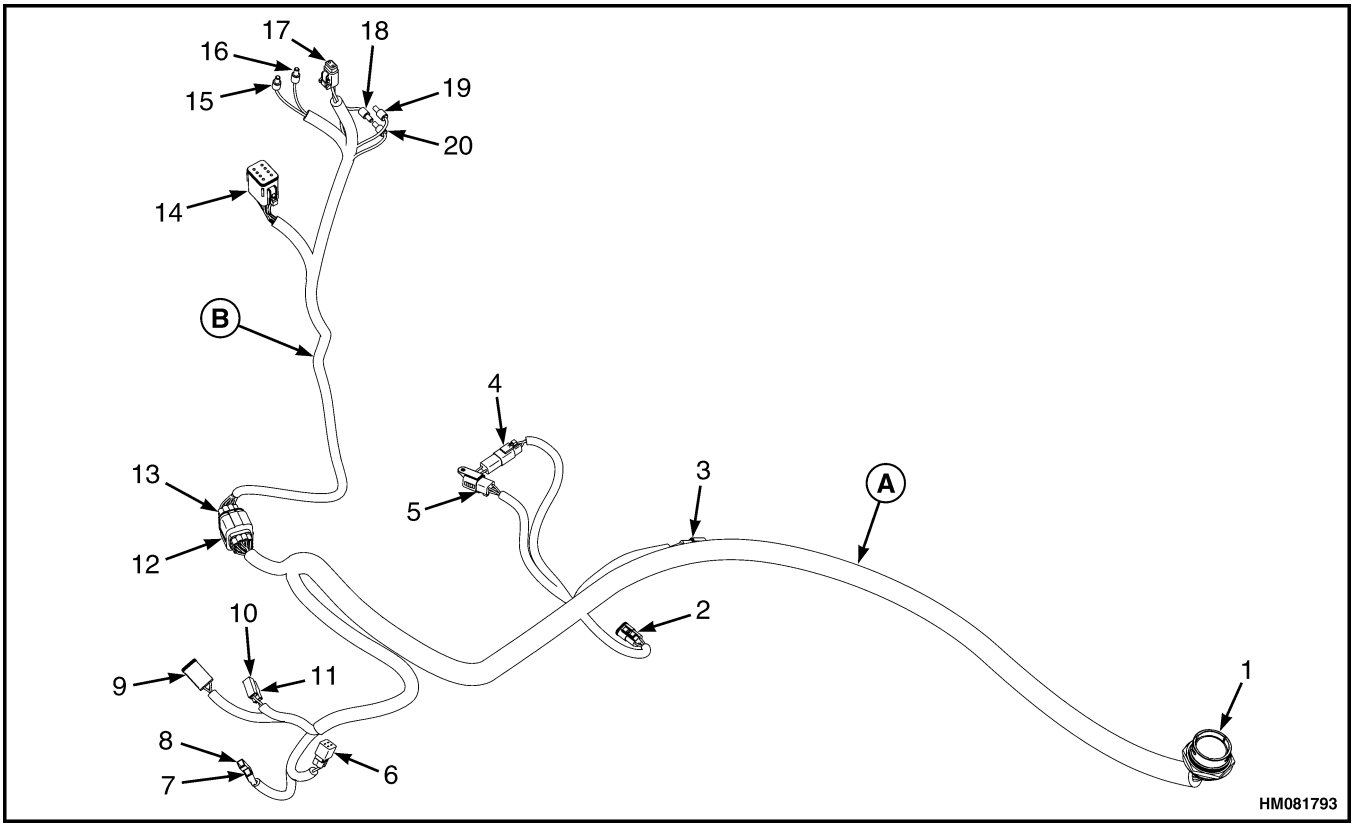


**A.** CAB UNDERFLOOR

**B.** STEERING COLUMN

***Figure 18. Cab Underfloor Harness Connectors***

https://truckmanualshub.com/



***Table 17. Legend for Cab Underfloor Harness Connectors***

| Item | Connector | Description |
|---|---|---|
| 1 | CRP33 | Underfloor – Side Console |
| 2 | CPS04 | Throttle Pedal |
| 3 | CPS78 | Front Wiper |
| 4 | CPS100 | Brake Light |
| 5 | CPS31 | Monotrol Pedal |
| 6 | CPS82 | Diode Horn |
| 7 | TS68 | Horn |
| 8 | TS69 | Horn |
| 9 | CPS32 | Inching Pedal |
| 10 | TS34 | Inching Switch |
| 11 | TS35 | Inching Switch |
| 12 | CPS30 | Underfloor – Steer Column |
| 13 | CRP30 | Steer Column – Underfloor |
| 14 | CPS29 | Shift Lever |
| 15 | TS80 | Master Warning |
| 16 | TS81 | Master Warning |
| 17 | TS67 | Indicator Switch R |
| 18 | TS64 | Indicator Switch 54 |
| 19 | TS66 | Indicator Switch L |
| 20 | CPS83 | Horn Button |

https://truckmanualshub.com/



## ARMREST HARNESS CONNECTORS

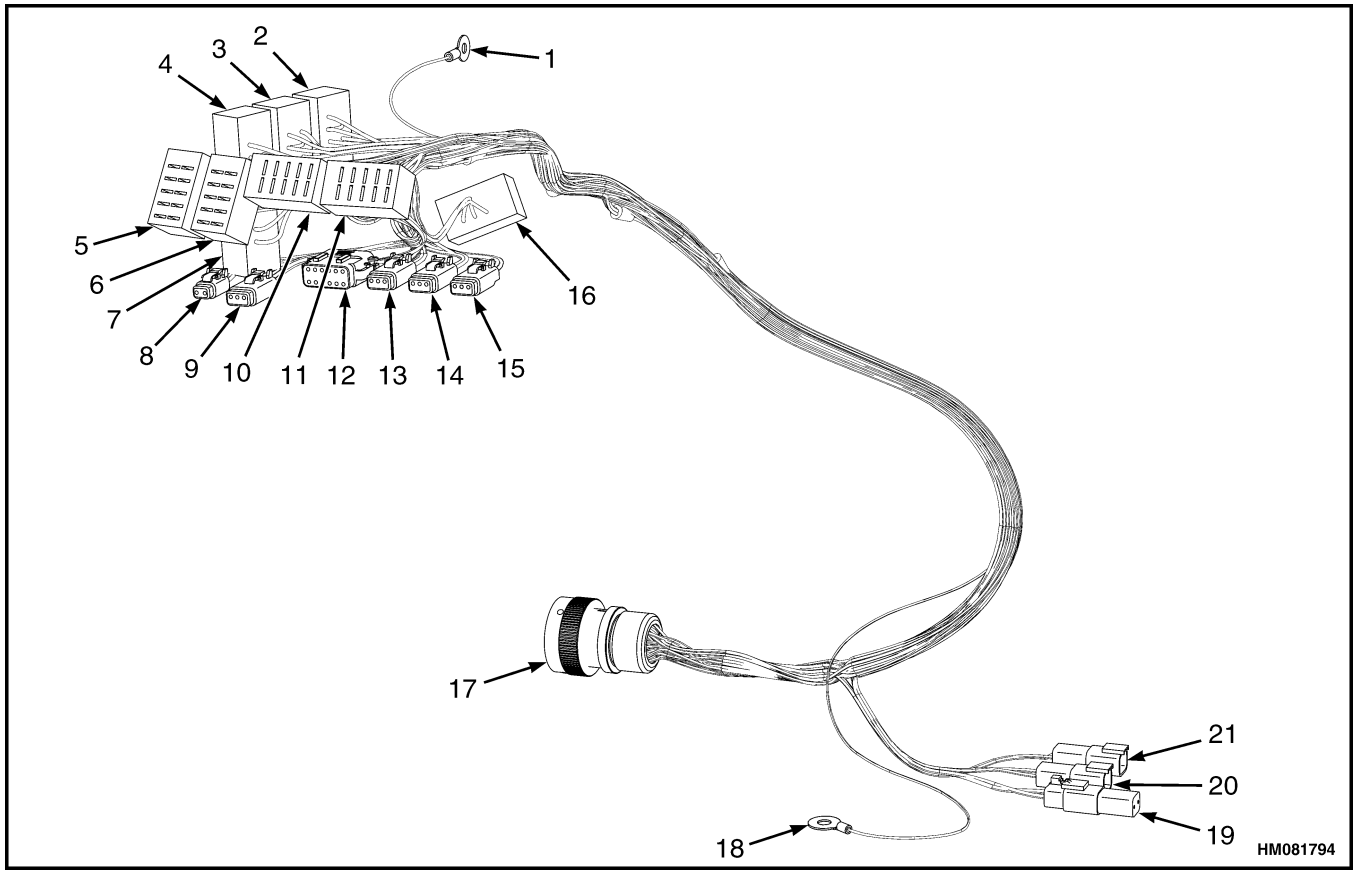


*Figure 19. Armrest Harness Connectors*

https://truckmanualshub.com/



***Table 18. Legend for Armrest Harness Connectors***

| Item | Connector | Description |
|---|---|---|
| 1 | TS102 | Armrest Ground |
| 2 | CPS91 | Rear Wiper/Washer Switch |
| 3 | CPS90 | Roof Wiper/Washer Switch |
| 4 | CPS86 | Front Wiper Switch |
| 5 | CPS80 | Horn Switch Armrest |
| 6 | CPS118 | Twist Locks |
| 7 | CPS89 | Front Washer Switch |
| 8 | CPS179 | Inhibit Auxiliary 1 |
| 9 | CPS09 | Auxiliary 1 Lever |
| 10 | CPS137 | Auxiliary 2 |
| 11 | CPS138 | Auxiliary 3 |
| 12 | CPS135 | Switches Joystick |
| 13 | CPS114 | Auxiliary 0 Lever |
| 14 | CPS112 | Tilt Lever |
| 15 | CPS113 | Lift Lever |
| 16 | CPS119 | Hydraulic Stop |
| 17 | CPS81 | Armrest – Side Console |
| 18 | TS103 | Armrest Ground |
| 19 | CPS144 | Suspension Seat |
| 20 | CRP440 | Seat Switch |
| 21 | CRP420 | Seat Belt Switch |

https://truckmanualshub.com/



## ECM HARNESS CONNECTORS (TIER 3/ STAGE IIIA)

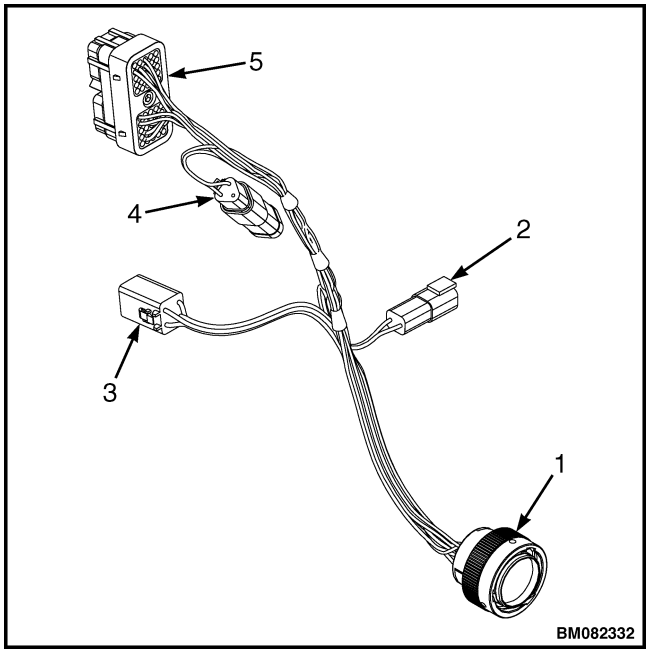


*Figure 20. ECM Harness Connectors (Tier 3/Stage IIIA)*

*Table 19. Legend for ECM Harness Connectors (Tier 3/Stage IIIA)*

| Item | Connector | Description |
|---|---|---|
| 1 | CPP03 | Tier 3 Adaptor |
| 2 | CRP88 | WIF Sensor |
| 3 | CPS05 | ECM Power Tier 3 |
| 4 | CRP58 | CAN Termination Resistor |
| 5 | CPS02 | ECM - Tier 3 |

https://truckmanualshub.com/



## EAS/ECM HARNESS CONNECTORS (TIER 4F/STAGE IV)

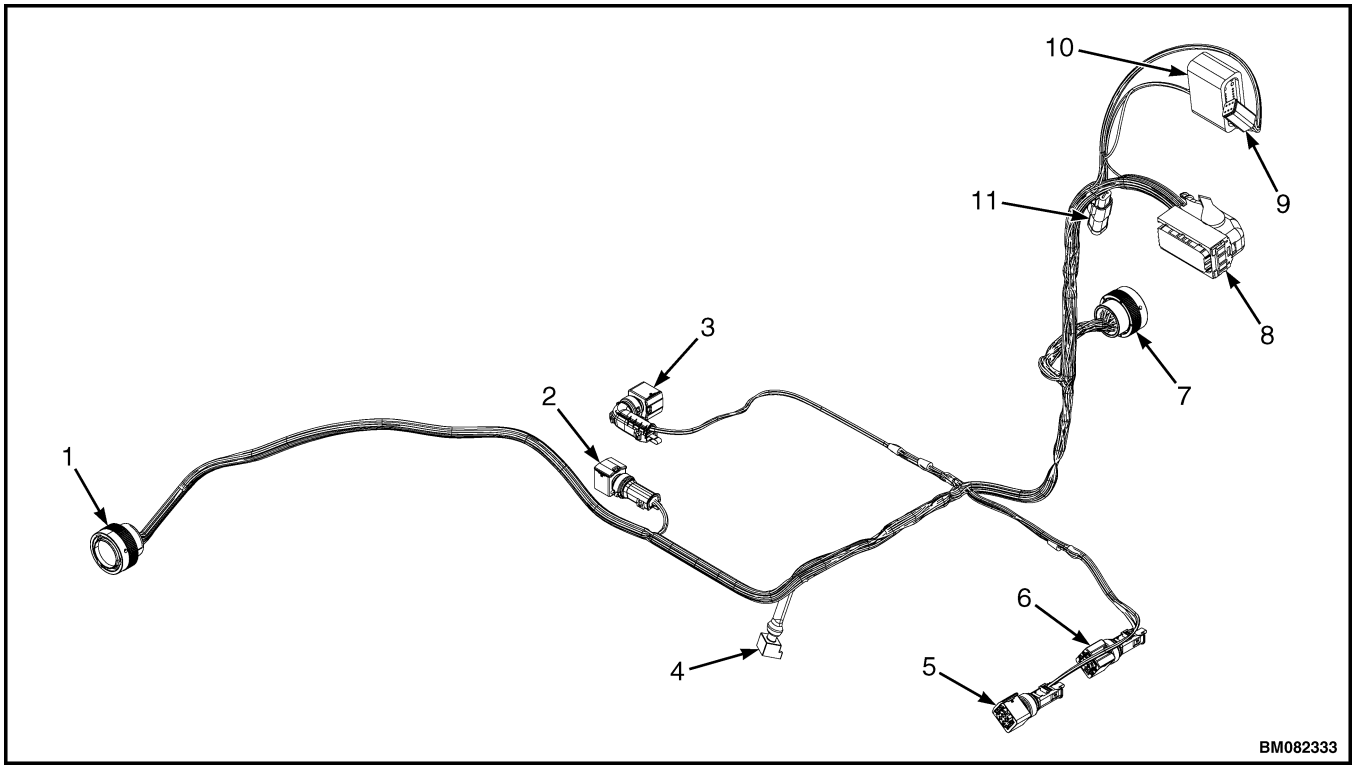


*Figure 21. EAS/ECM Harness Connectors (Tier 4F/Stage IV)*

*Table 20. Legend for EAS/ECM Harness Connectors (Tier 4F/Stage IV)*

| Item | Connector | Description |
|---|---|---|
| 1 | CPS189 | EAS – DEF |
| 2 | CPS153 | SCR Thermistor Controller |
| 3 | CPS159 | NOx Sensor SCR |
| 4 | CPS164 | DEF Dosing Module |
| 5 | CPS157 | NOx Sensor DOC |
| 6 | CPS156 | DOC Temp |
| 7 | CPP03 | Engine ECM Signals |
| 8 | CRP03 | ECM Tier 4 |
| 9 | CPS133 | Fan Clutch |
| 10 | CRP12 | ECM Cross Over |
| 11 | CPS134 | CAN Termination Resistor |

https://truckmanualshub.com/



## DEF TANK HARNESS CONNECTORS

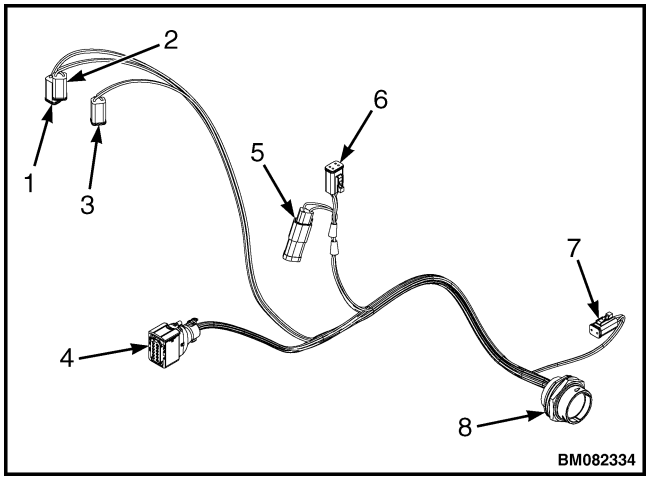


*Figure 22. DEF Tank Harness Connectors*

*Table 21. Legend for DEF Tank Harness Connectors*

| Item | Connector | Description |
|---|---|---|
| 1 | CPS146 | Line Heater 1 (DEF Hose) |
| 2 | CPS140 | Line Heater 3 (DEF Hose) |
| 3 | CPS141 | Line Heater 2 (DEF Hose) |
| 4 | CPS03 | DEF Supply Module |
| 5 | CPS158 | CAN Termination Resistor |
| 6 | CPS154 | DEF Sensors |
| 7 | CPS163 | DEF Tank Heating Valve |
| 8 | CRP189 | DEF - EAS |

https://truckmanualshub.com/



## POWERTRAIN HARNESS CONNECTORS

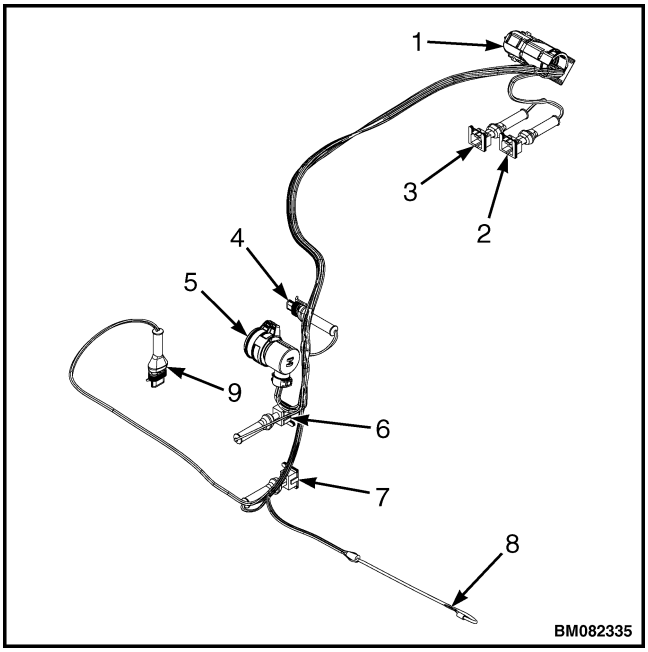


*Figure 23. Powertrain Harness Connectors*

*Table 22. Legend for Powertrain Harness Connectors*

| Item | Connector | Description |
|---|---|---|
| 1 | CRS02 | Powertrain – Frame |
| 2 | CPS24 | Internal Speed |
| 3 | CPS161 | Turbine Speed |
| 4 | CPS162 | XMSN Filter Switch |
| 5 | CPS150 | XMSN Connector |
| 6 | CPS22 | Engine Speed |
| 7 | CPS12 | Convertor Temp |
| 8 | TS13 | Startermotor Solenoid |
| 9 | CPS23 | Output Speed |

https://truckmanualshub.com/



## HOODSPINE HARNESS TIER 3/STAGE IIIA CONNECTORS

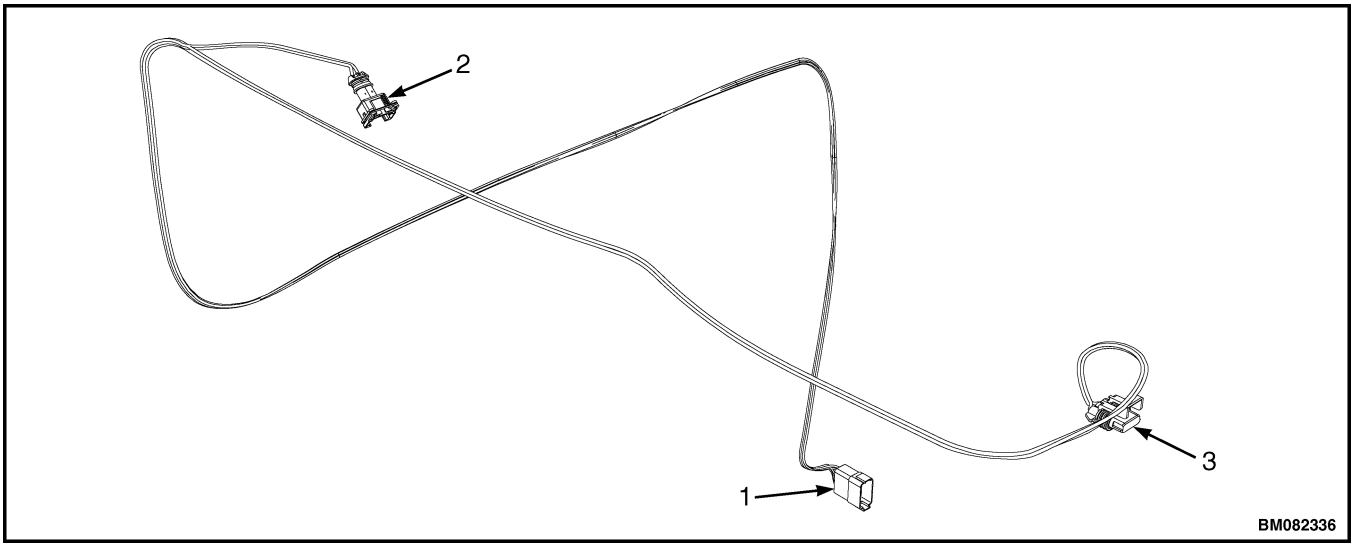


*Figure 24. Hoodspine Harness Tier 3/Stage IIIA Connectors*

*Table 23. Legend for Hoodspine Harness Tier 3/Stage IIIA*

| Item | Connector | Description |
|---|---|---|
| 1 | CRP127 | Hoodspine – Frame |
| 2 | CPS97 | Air Filter |
| 3 | CPS103 | Coolant Level |

https://truckmanualshub.com/



## HOODSPINE HARNESS TIER 4F/STAGE IV CONNECTORS

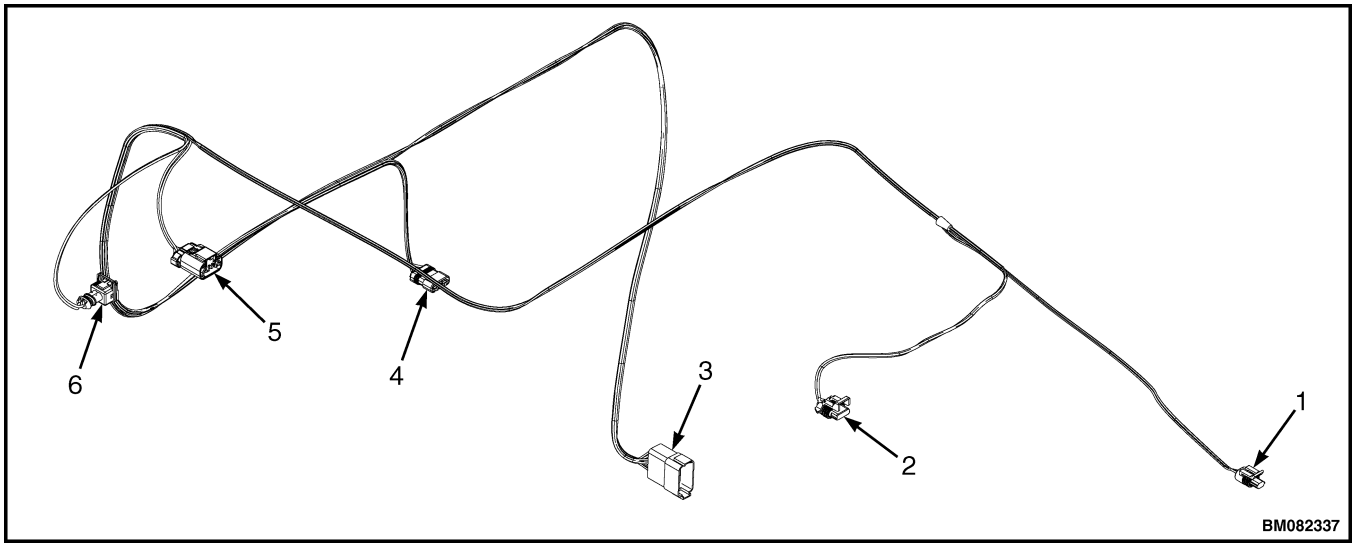


*Figure 25. Hoodspine Harness Tier 4F/Stage IV Connectors*

*Table 24. Legend for Hoodspine Harness Tier 4F/Stage IV*

| Item | Connector | Connector | Description |
|---|---|---|---|
| | L007 | B238/K019 | |
| 1 | CPS147 | CPS147 | CAC Temperature |
| 2 | CPS103 | CPS103 | Coolant Level |
| 3 | CRP127A | CRP127 | Hoodspine – Frame |
| 4 | CPS152 | -- | TBAP Sensor to Engine |
| 5 | CPS151 | CPS57 | TBAP Sensor |
| 6 | CPS188 | CPS97 | Air Filter |

https://truckmanualshub.com/

# NOTES

https://truckmanualshub.com/

https://truckmanualshub.com/