https://truckmanualshub.com/

Product advantages
Mobile crane LTM 1090/3

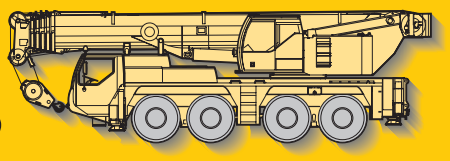

Max. lifting capacity: 90 t
Max. height under hook: 84 m with biparted swing-away jib
Max. radius: 58 m with biparted swing-away jib

The performance profile of the LTM 1090/3 at a glance.

- Outstanding lifting capacities, the strongest 4-axle crane on the market
- Powerful, energy-saving and emission-optimized Liebherr Diesel engines, carrier engine of 460 kW output (EURO 3) and with fully electronic engine management, crane engine of 149 kW output
- Ultramodern data bus technology with three CAN busses and three Liebherr system busses
- Active rear-axle steering: Electrohydraulic and speed-dependent steering of the 4th axle
- Travel control and outrigger actuation from the crane cab, a standard feature
- Comfortable electric/electronic crane control with integrated LICCON system
- Compact, 6-section telescopic boom of 11,5 m – 52 m length, of oviform profile for high lateral stability
- Rapid-cycle telescoping system "Telematik" with patented internal interlocking system, fully automatic or manually controlled telescoping is practicable
- 10,8 m – 19,5 m long biparted swing-away jib, mountable at 0°, 20° and 40°, hydraulic erection aid, hydraulically adjustable biparted swing-away jib (optional)
- Two intermediate sections of 7 m each for the extension of the telescopic boom at operation with swing-away jib, max. height under hook 84 m
- LICCON, the most modern crane computer system with comprehensive informative, monitoring and control functions
- The LTM 1090/3 is manufactured by Liebherr within the scope of a quality assurance system in accordance with DIN ISO 9001

LIEBHERR

The better crane.

CD-

https://truckmanualshub.com/

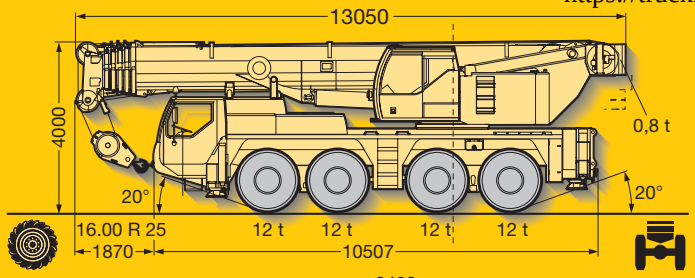

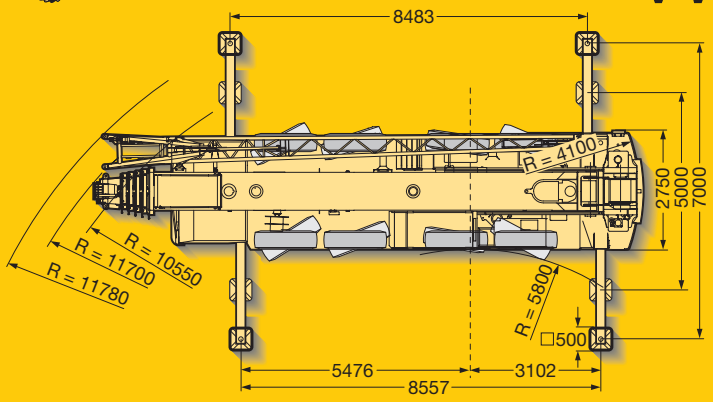

Compact, manoeuvrable and weight-optimized.

- Overall length 13.05 m, carrier length 10.5 m
- Large overhang angles of up to 20°
- The smallest turning radius of 8.76 m with all-wheel steering
- Tail ballast radius of just 4,26 m
- 48 t total weight, incl. 0.8 t ballast, biparted swing-away jib, drive 8 x 8, tyre equipment size 16, 59 t hook block, Telma eddy current brake, (axle load 4 x 12 t)
  3 tyre sizes optional
  14.00 R 25 carrier width 2.75 m
  16.00 R 25 carrier width 2.75 m
  20.50 R 25 carrier width 2.98 m

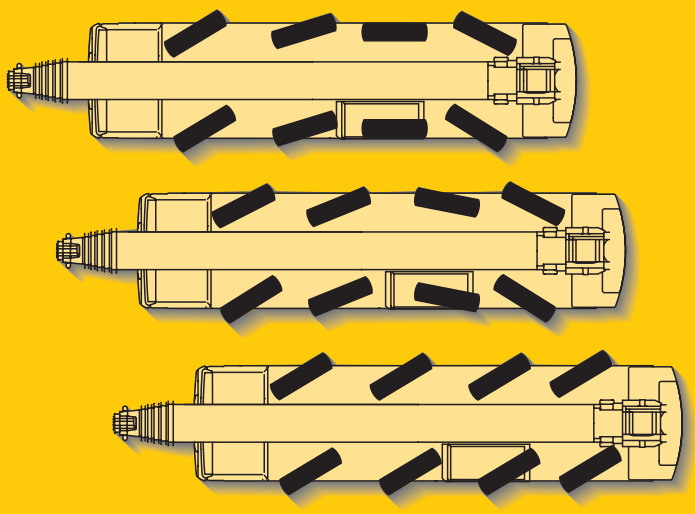

Variable drive and steering concept.

- Drive 8 x 6, axles 2 and 4 driven, 3rd axle activatable for off-road travel
- Drive 8 x 8 (optional), axles 1, 2, 3 and 4 driven, for road travel 2nd and 4th axle driven, 1st and 3rd axle are activatable for off-road displacement
- Axles 1, 2, 3 and 4 steered, 3rd and 4th axle also steerable independent of axles 1 and 2 (for crab steering/diagonal displacement); all steering versions can equally be controlled from the crane cab
- Speed dependent active rear-axle steering (standard equipment), the 4th axle is steered electrohydraulically and speed-dependent, and is locked for straight travel from approx. 25 km/h onwards
- No distortion of the rear-axle tandem
- Smaller turning radius at road travel

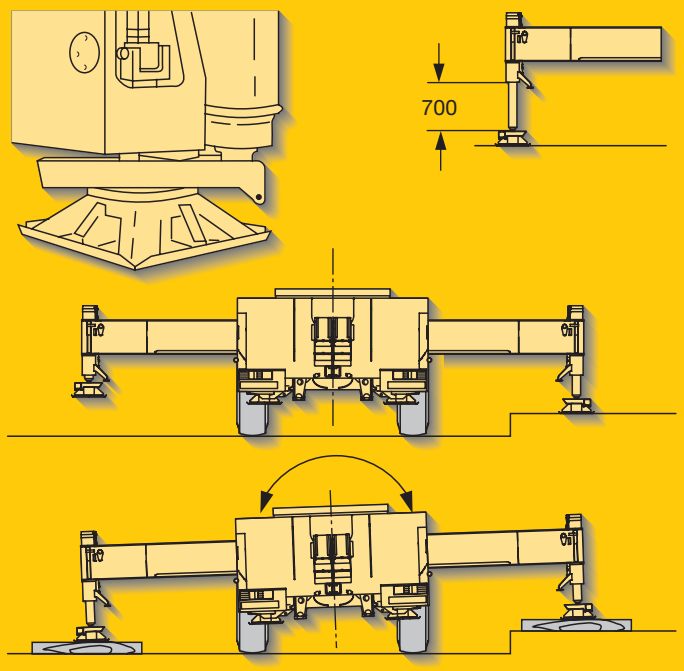

Setting crane on outriggers – quick, convenient and safe.

- Variable supporting basis
  Outriggers retracted
  Supporting basis 5 m x 8.55 m
  Supporting basis 7 m x 8.55 m
- Fix-mounted supporting pads, protected by splash guards
- Supporting ram travel of up to 700 mm
- Levelling control of outrigger system; fully automatic levelling of the crane during the supporting procedure by "pushbutton"
- 2 x 9° lateral inclination of carrier and crane superstructure
- The control panels at either side of the carrier, with membrane keyboard and electronic inclinometer as well as with pushbuttons for ENGINE/START/STOP und speed control are illuminated and lockable
- Control of the outrigger system can equally take place from the crane cab (standard equipment)
- Operation of the outrigger system in accordance with the rules for the prevention of accidents
- Supporting area illuminated by 4 integrated projectors

The LTM 1090/3. More benefit through advanced technology.

https://truckmanualshub.com/

Torsional rigid telescopic boom.

- Oviform boom profile of particular inherent stability
- Telescopes mounted on maintenance-free polyamide slide pads
- First-rate lifting capacities, e.g.
  28.7 t at 10 m radius
  10.6 t at 20 m radius
  5.7 t at 30 m radius
  3.2 t at 40 m radius
  2.0 t at 50 m radius
  0.8 t at 58 m radius
- Telescoping by rapid cycle, approx. 360 s for boom length 11.5 m – 52 m

Crane cabin of modern design.

- Steel-fabricated, corrosion resistant crane cab, powder-coated, with internal sound and heat absorbing panelling, modern interior design, tinted window screens all-round, front knockout window with large windscreen wiper and washer, skylight with bullet-proof glass and large parallel windscreen wiper, roller blinds on front window and skylight, space-saving sliding door
- Pneumatic-operated footboard for safe access to the carrier
- Crane cab tiltable backwards by 20°

Weight-optimized steel structure.

- Steel structure of the carrier, superstructure and telescopic boom in light-gauge design, weight-optimized by the F.E.M method, outstanding torsional rigidity
- Tensile property of the material with high safety factors through the application of STE 960 (960 N/mm²) for all supporting members. Telescopic boom consisting partially of ultrahigh-tensile steel S 1100 (1100 N/mm²)
- Weldment joints of outstanding quality are performed by computer-aided welding machines
- The weld quality is documented by ultrasonic test

Crane drive with field-proven components.

- Crane engine: 4-cylinder turbo-charged Liebherr Diesel engine type D 924 TI-E A4 of 149 kW/202 h.p., robust and reliable, located opposite to the crane cab, thus reduced noise pollution; exhaust gas system of stainless steel, very efficient noise abatment of engine and gear compartment as standard feature
- Slewing rim, slewing gear and the winches are self-manufactured components, specially matched for mobile cranes
- The centralized lubricating system for slewing rim, boom bearing application, luffing ram and winch bearings is a standard feature

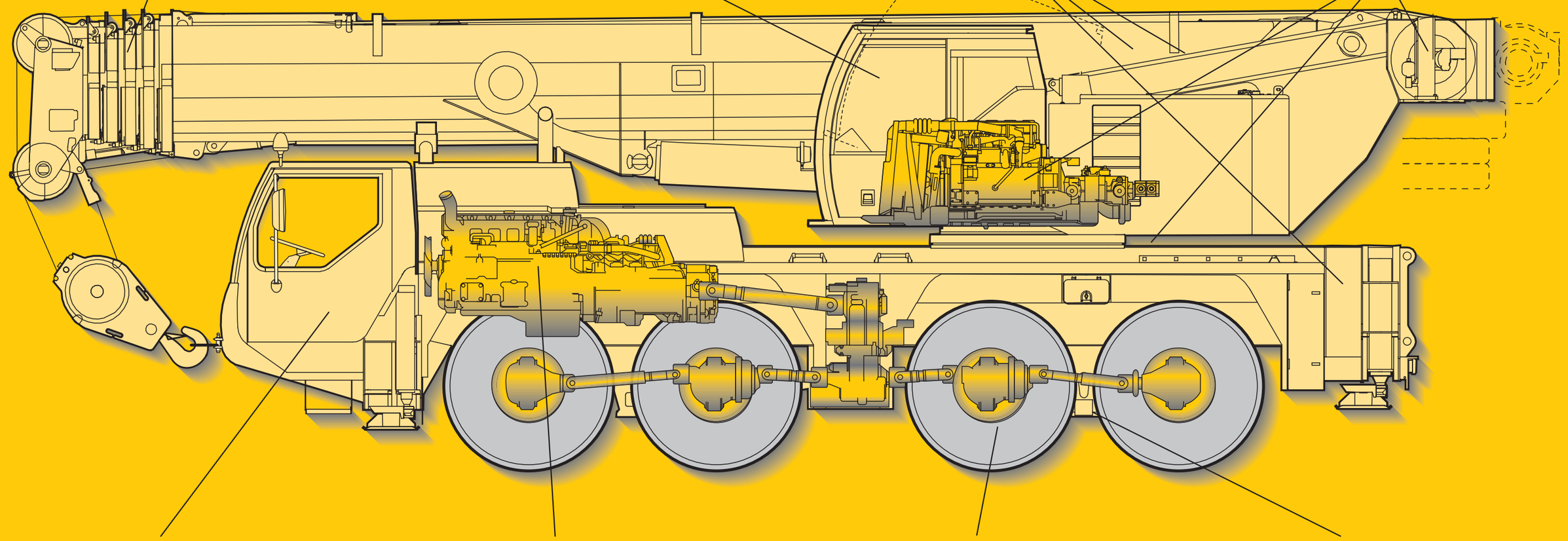

Modern comfortable driving cab.

- Steel-made corrosion resistant driving cab, cataphoretic dip-primed, front section mounted on rubber shock absorbers, rear section on hydraulic dampers, internal sound and heat absorbing panelling, modern interior design of outstanding functionality
- Safety glas all-round, heat-isolating tinted windows, electric window lifters
- Standardized digital operating and control elements, arranged in and operator-friendly halfround shape

Modern and powerful carrier drive.

- Carrier engine: 6-cylinder Liebherr turbo-charged Diesel engine type D 846 TI A5 of 338 kW/460 h.p. (EURO III), robust and reliable, electronic engine management
- Entire exhaust gas system of stainless steel
- ZF power shift gear with automated control system AS-TRONIC, 12 forward speeds, 2 reverse speeds, electronic gear management, intarder
- Max. driving speed 80 km/h, max. gradability 71 %
- Very efficient noise abatment of engine and gear compartment as standard feature

Outstanding carrier technology for on-road and off-road displacement.

- Weight-optimized axles, almost maintenance-free, made of high-tensile steel, perfect track keeping and lateral stability due to special control linkage arrangement
- The steering knuckles are mounted on steel-rubber bearings
- The perfected and robust axles are manufactured in large series and are troublefree components
- The cardan shafts are maintenance-free; easy and quick fitting of the cardan shafts due to 70° diagonal toothing and 4 fixing screws

Niveaumatik suspension – preserving crane and roads.

- Maintenance-free suspension rams, free of lateral forces, protected against damage by synthetic tubes
- Level position (suspension on "travelling mode") can be automatically adjusted by pushbutton control from the driving cabin
- Stable cornering ability due to cross mounting of the hydropneumatic suspension
- Axle locking system (locking of the suspension for the displacement with loads) controlled from the driving cab
- Suspension travel +/-150 mm

https://truckmanualshub.com/

Comfortable driving cabin of outstanding functionality.

- Modern and comfortable driver's cab of high functionality and convincing design
- Ergonomically arranged operating and display elements for safe and convenient handling at continuos operation
- Digital display and keyboard units interconnected with the function blocks by data bus technique
- Air-cushioned driver's and co-driver's seats, headrests, driver's seat with pneumatic lumber support
- Height and inclination adjustable steering wheel
- Heated and electrically adjustable rear mirrors
- Safety belts for driver and co-driver
- 3 automatic windscreen wipers/washers with intermittent control
- Delayed disconnection of interior lighting
- Various racks and boxes
- Radio preparation

Comfortable crane cabin of outstanding functionality.

- Crane operator's seat with pneumatic lumber support and headrest
- Operator-friendly armrest-integrated controls, vertically and horizontally adjustable master switch consoles and armrests, individually adjustable operating consoles
- Ergonomic control levers with integrated winch rotation and slewing gear signalling device
- Modern supporting base with integrated LICCON monitor, display of all essential operating data on the LICCON screen
- Windscreen wiper/washer system for front window and skylight
- Various racks and boxes
- Radio preparation
- Crane cab tiltable backwards by 20°

https://truckmanualshub.com/

- The electric and electronic components are interconnected by the latest data bus transmission technique
- The Diesel engine, the automated power shift gear, the active rear-axle steering and outriggers are controlled by 3 CAN data busses. The fully electronic drive management reduces fuel consumption and improves the exhaust gas emission
- The carrier and crane electric systems, including all cockpit functions, the outrigger system and boom sensor system are interconnected by the Liebherr system busses
- Instead of the traditional electric wiring, the data transmission to the individual function blocks is performed digitally via a few data cables only
- The activation of the function blocks is realized by I/O modules, the programming of which is performed via the Liebherr system busses. The control intelligence is integrated into the LICCON central unit
- The data bus technique clearly contributes to an increase in functionality and efficiency as well as to the ease of servicing and diagnostic

Legende:

- LSB - Liebherr System Bus 1
- LSB - Liebherr System Bus 2
- LSB - Liebherr System Bus 3
- CAN - Bus
- SCI - Serial Communication Interface

1 Input/output module for suspension, Diesel engine, power shift gear, control functions, pneumatic control of brake function
1a Keyboard unit for instruments in driver's cab
2 Input/output modules for differential locks, all-wheel steering, steering from cabin, display functions
2a Display unit of instruments in driver's cabin
3 Input/output module for outrigger system – right
3a Control unit for outriggers – right
4 Input/output module for outrigger system – left, and for rear-axle steering
4a Control unit for outriggers – left
5 Input/output module for engine brake, cruise controller, speed setter, electronic control of Diesel engine
6 Control of automated ZF AS-TRONIC power shift gear
7 Control of ABV (automatic anti-skid device)
8 Control of injection pump – Liebherr Diesel engine
9 Rotary slip ring unit, slewing sensor
10 Control valve for active rear-axle steering
11 Inclination sensor for automatic levelling
12 Connection of Liebherr System Bus (LSB 1, 2, 3)
13 LICCON central unit
14 LICCON monitor in crane cabin
15 Length sensor and cable drum/energy cable for interlocking gripper/telescopic boom
16 Inductive sensor
17 Angle sensor on base section
18 Cable drum for items 16, 17 and 18
19 Wind sensor (optional)
20 Hoist limit switch
21 Angle sensor
22 Master switch
23 Control of injection pump – Liebherr Diesel engine/crane superstructure
24 Input/output module for Diesel engine

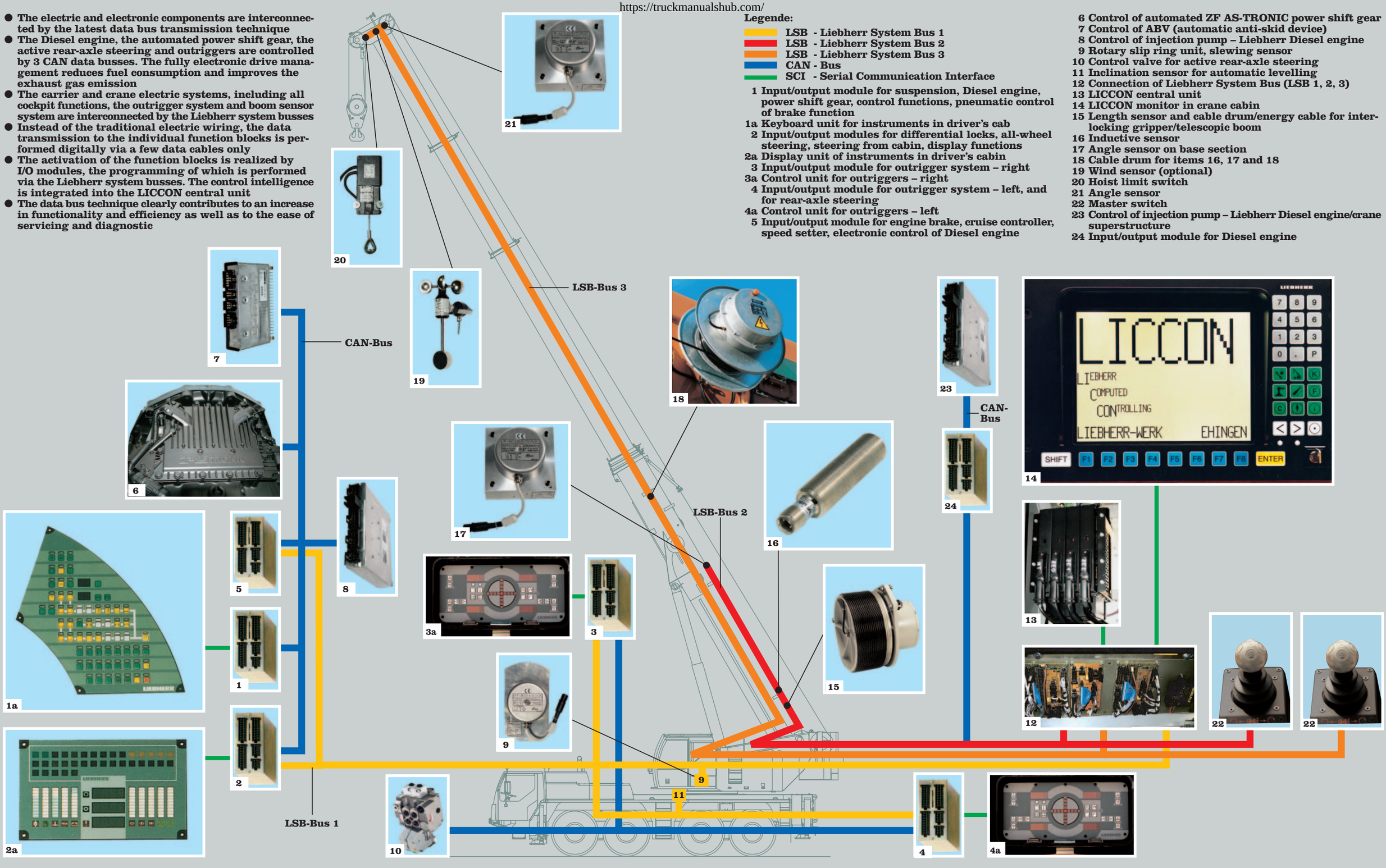

Data bus technique revolutionizes crane electric system.

https://truckmanualshub.com/

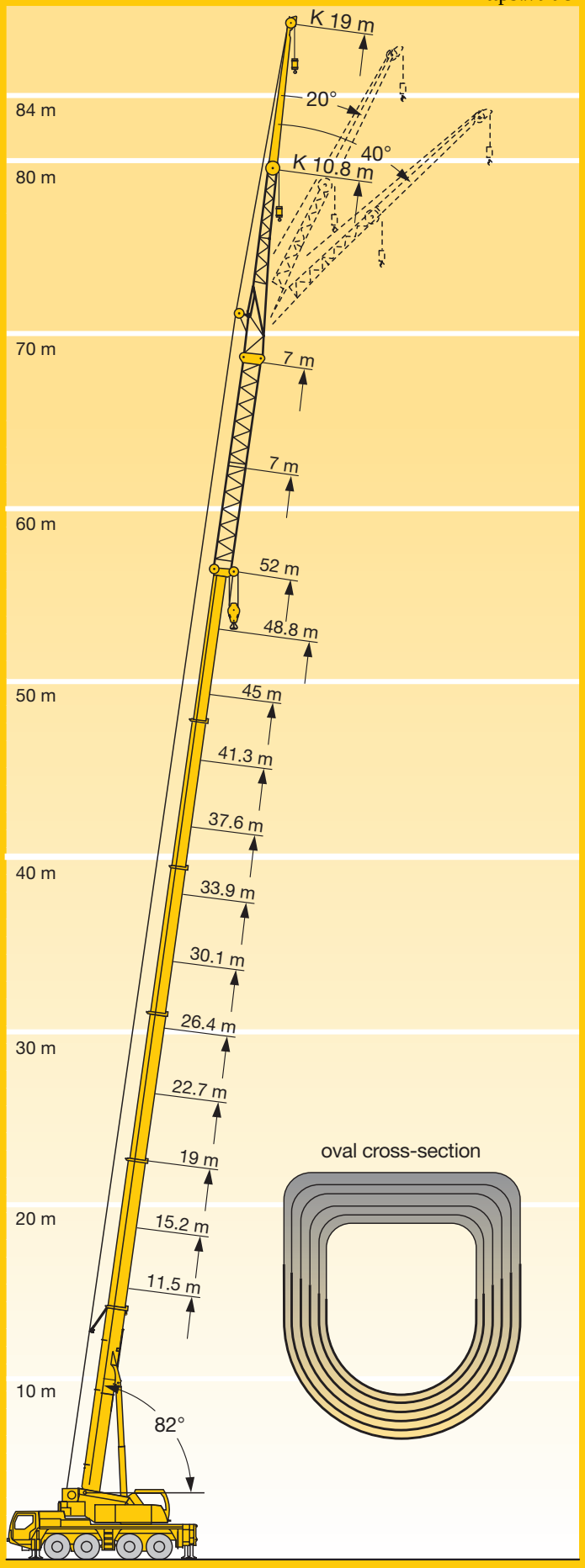

Lifting loads – precise and safe.

- 6-section, 52 m long telescopic boom and biparted swing-away jib of 10.8 m – 19 m for 72 m height under hook and 56 m radius
- Two intermediate sections of 7 m each for the boom extension for operation with swing-way jib, max. height under hook 84 m
- Telescopic boom with rounded, oviform bottom shell, thus maximum lateral stability
- Optimal utilization of the telescopic boom through a multitude of telescoping variants
- Swing-away jib mountable at 0°, 20° and 40°, hydraulic fitting aid, hydraulic ram for stepless variation of the luffing jib from 0° – 40° (optional)
- Luffing under load (interpolation of the loads)
- Easy and quick re-reeving of the hoist rope due to self-locking rope dead end connection
- Load hook with self-locking rope dead and connection, cylindrically shaped hook for easy displacement by rolling on hard surface

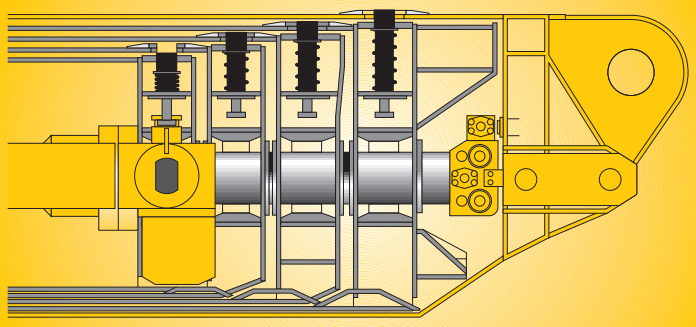

LICCON-assisted telescoping system.

- Telescoping by single-stage hydraulic ram with hydraulic driving tenons (patented internal interlocking system)
- Telescoping procedure controllable by convenient operator's guide on the monitor, precise approach of interlocking positions
- Telescopable loads are displayed on the LICCON operating image
- Rapid-cycle telescoping system with "automatic mode", i.e. fully automatic telescoping of the boom to the desired length
- Particularly compact and light-weight telescoping system, thus increased lifting capacities specially with long booms at large radii
- Automatic cushioning in end positions during telescoping and retracting for the preservation of the structural members

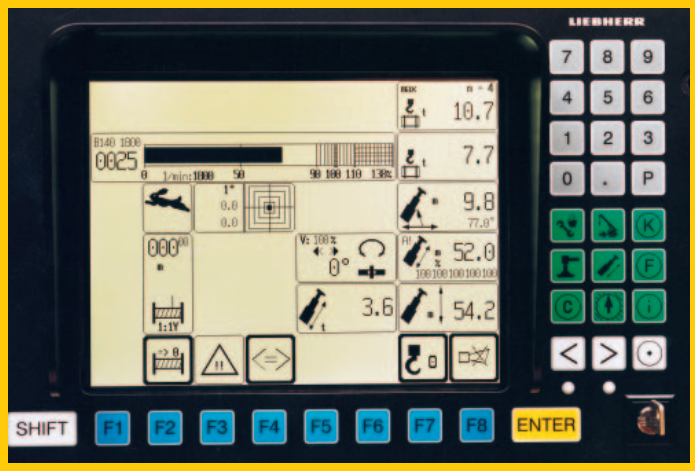

https://truckmanualshub.com/

LICCON computer system with safe load indicator and test system.

- Setting of crane configuration by convenient interactive functions
- Safe and reliable acknowledgement of the crane configuration set
- Representation of all essential data by graphic symbols on the operating image
- Integrated wind speed control (optional)
- Reliable cut-off device in the event of exceeding the permissible load moments
- Indication of safe working loads for any intermediate boom length
- Winch indications for ultra-precise lifting and lowering of the load
- Test system for servicing, providing the facility of checking all sensors within the system on the monitor
- The service and diagnostic system LiSSy (optional) enables the data base assisted administration of the errors programmed in the crane control, including error text, description and cause of error as well as the measures to be taken for the elimination of the error
- The system enables a remote diagnostic analysis due to the rapid online access to the service documentation such as the electric circuit diagram and workshop manual

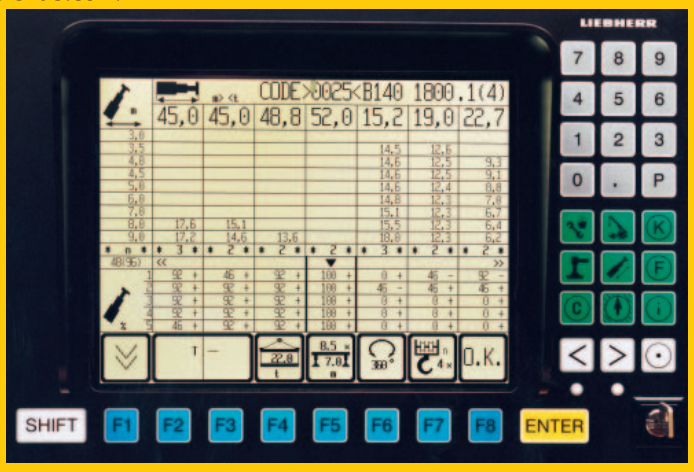

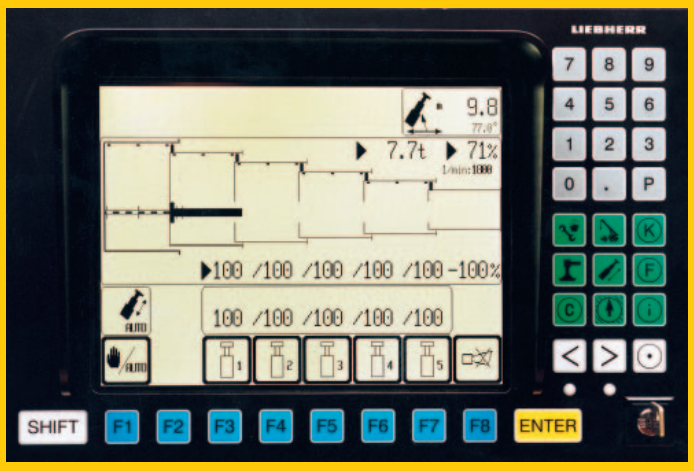

Mounting of counterweight – just a matter of minutes.

- Counterweight variants of 22 t, 11.5 t, 8 t, 6.2 t, 5.2 t, 2.2 t and 0.8 t
- Ballasting controlled from the crane cabin
- Quick ballasting due to a new "keyhole" system
- Compact counterweight dimensions, e.g. 11.5 t counterweight of 2.73 m width only
- Hoist gear 2 (optional) mountable by counterweight lifting device

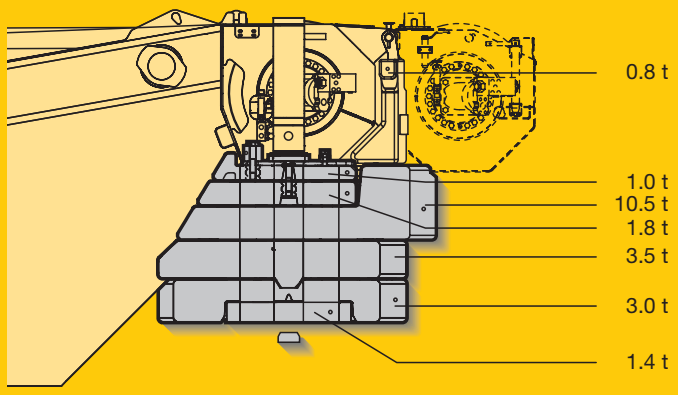

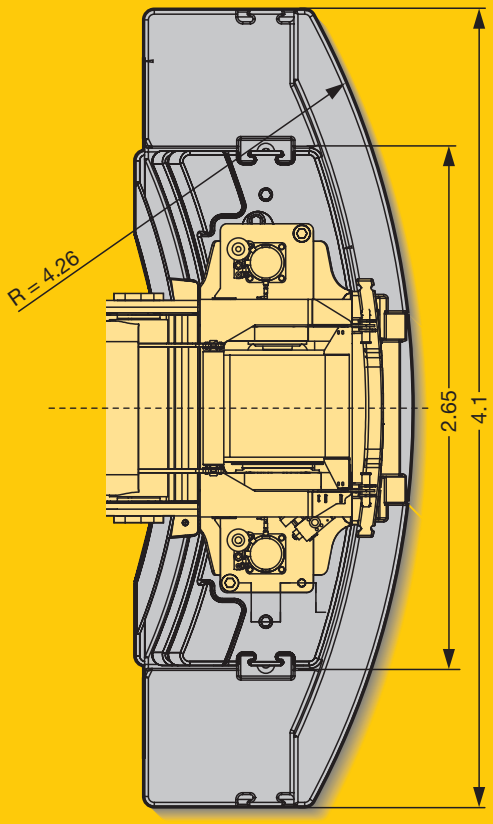

CD-

https://truckmanualshub.com/

Electric/electronic PLC crane control and test system.

- Control of the winches, slewing gear as well as luffing and telescoping motions by the LICCON computer system (PLC control)
- Summated displacement control, i.e. both pumps can be switched to one single consumer
- Electric load sensing, open oil circuits with displacement control
- Four working motions can be performed independent of one another
- High-speed activation even during a working motion
- Speeds of hoisting/lowering, luffing and slewing preselectable by 6 steps
- Extremely short response times when initiating crane motions
- Functional test of all essential components by the LICCON test system

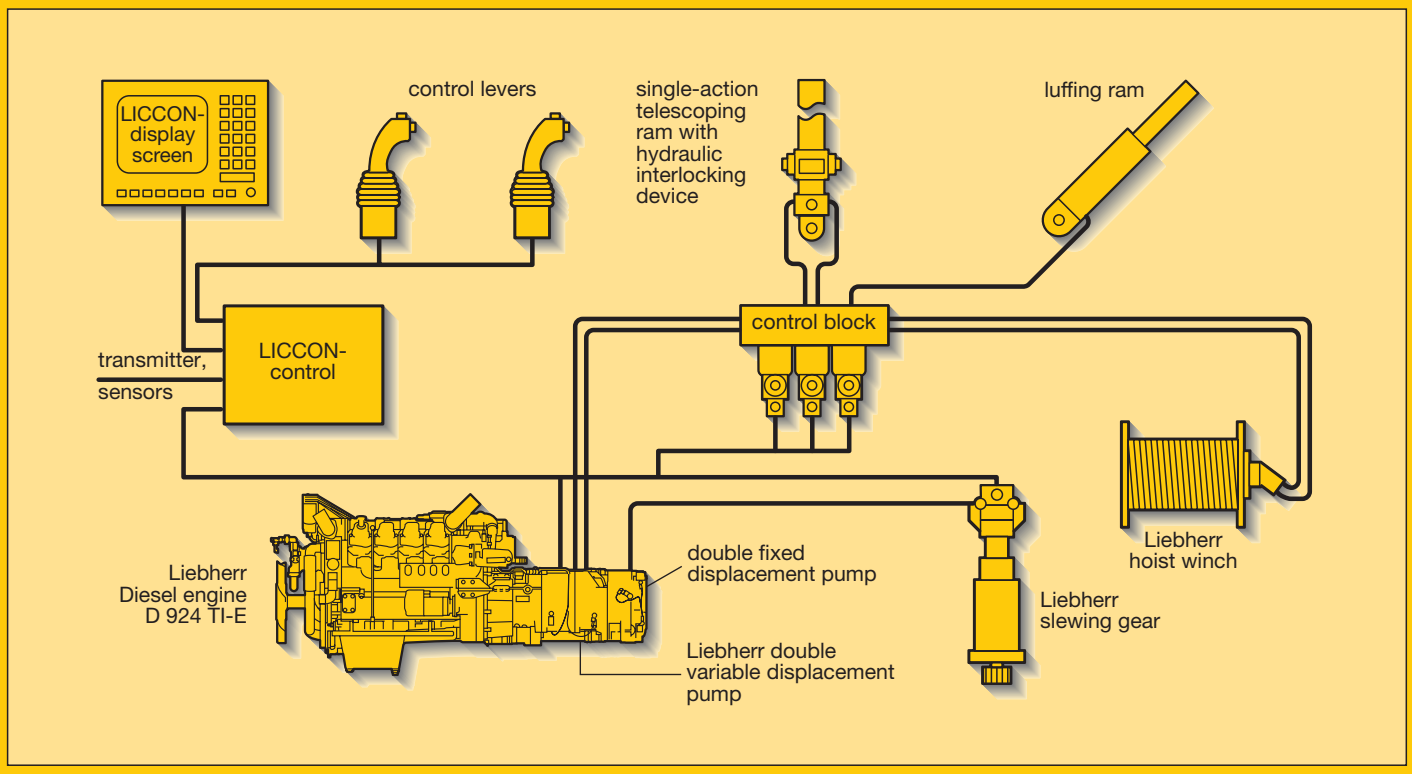

Optional features extend the application spectrum and increase comfort and safety.

On the carrier

- Additional heater Thermo 90 S with engine pre-heating
- Eddy-current-brake
- Supporting pressure indication on carrier and in crane operator's cabin
- Rope box
- Air-conditioning system
- Trailer coupling D12/D19
- Radio preparation
- Seat heating for driver's and co-driver's seat
- Cassette radio set

On the crane superstructure

- Additional heater Thermo 90 S with engine pre-heating
- 2nd hoist gear
- Air-conditioning system
- Seat heating
- Work area limitation
- Aircraft warning light
- XENON working projector on base section, electrically adjustable
- Twist absorber
- Remote diagnostic by GSM module
- Cassette radio set
- Emergency actuation

Further optional features by request.

Subject to modification.

Please contact
Liebherr-Werk Ehingen GmbH, Postfach 1361, D-89582 Ehingen
☎ +49 (0)7391 5 02-0, Fax +49 (0)7391 5 02-33 99
www.liebherr.com, E-Mail: info@lwe.liebherr.com

CD-