https://truckmanualshub.com/

Zone Commander
Model 2511
Operator's Manual

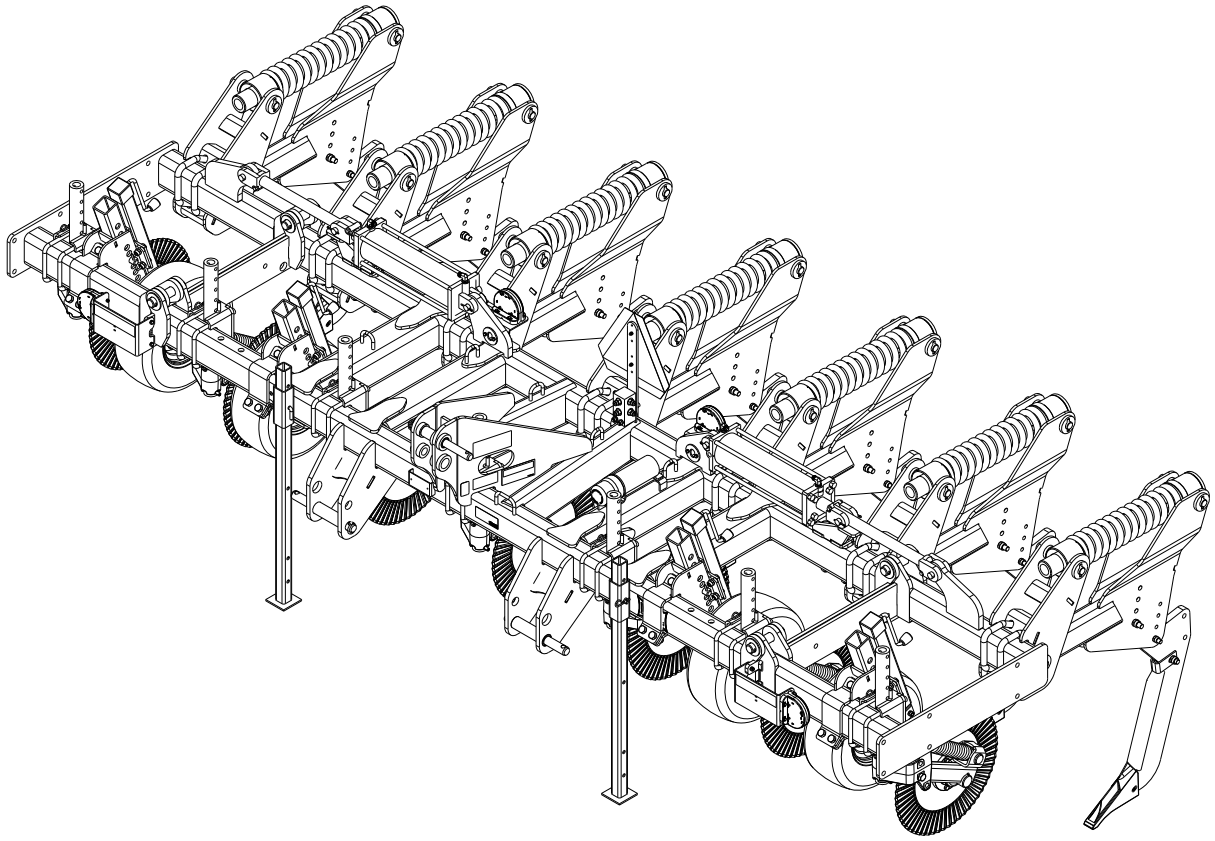

LANDOLL CORPORATION
1900 North Street
Marysville, Kansas 66508
(785) 562-5381
800-428-5655 ~ WWW.LANDOLL.COM

F-758R0

https://truckmanualshub.com/

https://truckmanualshub.com/

Table of Contents

1 Introduction and Safety Information

Understanding Safety Statements 1-2
Decal Safety 1-2
Transporting Safety 1-2
Attaching, Detaching, and Storage 1-3
Maintenance Safety 1-3
High Pressure Fluid Safety 1-3
Protective Equipment 1-3
Chemical Safety 1-3
Prepare for Emergencies 1-3
Tire Safety 1-3
Safety Chain 1-4

2 Standard Specifications

Model Specifications 2-1
General Torque Specifications 2-3
Hydraulic Fitting Torque Specifications 2-4

3 Assembly Instructions

Assembly Preparation 3-2
Jackstand Installation 3-2
SMV Bracket Installation 3-2
Tire and Wheel Assembly 3-2
Auto-Reset Clamp and Shank Assembly 3-3
RSB Clamp and Straight Shank Assembly 3-6
Coverboard Installation 3-9
Right Hand & Left Hand Coulter Assemblies 3-9
Electrical Installation 3-12
Hydraulic Fold Installation 3-18

4 Operation and Maintenance

Tractor Preparation 4-2
Zone Commander Operation 4-2
Attaching to Three-Point Hitch 4-2
Field Operation - Three Point Hitch Type 4-4
Wheel Bearing Maintenance 4-4
Coulter Spring Adjustment 4-4
Lubrication 4-4
Storage 4-4

5 Troubleshooting Guide

https://truckmanualshub.com/

https://truckmanualshub.com/

Chapter 1

Introduction and Safety Information

The Brillion Model 2511 Zone Commander is a quality product designed to give years of trouble free performance. By following each section of this manual, your system will perform as designed for you and your operation.

CHAPTER 1 Gives basic instructions on the use of this manual and understanding the safety statements.

CHAPTER 2 Gives product specifications for the equipment. These specifications supply lengths and measures for your equipment. A Standard Bolt Torque Table is provided to give guidelines for bolt torques to be used when servicing this product.

CHAPTER 3 Contains assembly instructions for your 2511 Zone Commander. When these procedures are correctly followed, your equipment should provide you years of trouble-free operation and service.

CHAPTER 4 Instructs how to operate your equipment before using it, and describes adjustments needed. Gives practical advice for the care and maintenance of your Landoll equipment. Drawings in this section locate adjustment points on the equipment.

IF YOU HAVE ANY QUESTIONS CONTACT:
LANDOLL CORPORATION
1900 NORTH STREET
MARYSVILLE, KANSAS 66508

PHONE # (785) 562-5381 or (800) 428-5655
OR
FAX # (888) 527-3909

CHAPTER 5 Is a troubleshooting guide to aid in diagnosing and solving problems with the Zone Commander.

PARTS MANUAL Is a separate manual showing the various assemblies, subassemblies, and systems. Refer to that manual when ordering Landoll replacement parts. Order parts from your Landoll dealer.

WARRANTY The Warranty Registration form is included with the product documents. Fill it out and mail it within 15 days of purchase.
NOTE: IMPROPER ASSEMBLY, MODIFICATION, OR MAINTENANCE OF YOUR LANDOLL MACHINE CAN VOID YOUR WARRANTY.

COMMENTS Address comments or questions regarding this publication to:

LANDOLL CORPORATION
1900 NORTH STREET
MARYSVILLE, KANSAS 66508
ATTENTION: PUBLICATIONS - DEPT. 55

https://truckmanualshub.com/

Understanding Safety Statements

You will find various types of safety information on the following pages and on the machine signs (decals) attached to the vehicle. This section explains their meaning.

The Safety Alert Symbol means ATTENTION! YOUR SAFETY IS INVOLVED!

NOTE

Means that failure to follow these instructions could cause damage to the equipment or cause it to operate improperly.

NOTICE

Special notice - read and thoroughly understand.

CAUTION

Caution means serious equipment or other property damage can occur if instructions on this label are not properly followed.

WARNING

Warning means serious injury or death can occur if safety measures or instructions on this label are not properly followed.

DANGER

Danger means a life-threatening situation exists. Death can occur if safety measures or instructions on this label are not properly followed.

NOTE

Make sure you read and understand the information contained in this manual and on the machine signs (decals) before you attempt to operate or maintain this vehicle.

The safety statements contained in this manual relate to the operation of the Model 2511 Zone Commander.

Decal Safety

1. Examine safety decals and be sure you have the correct safety decals for the implement.
2. Keep these signs clean so they can be observed readily. It is important to keep these decals cleaned more frequently than the implement. Wash with soap and water or a cleaning solution as required.
3. Replace decals that become damaged or lost. Also, be sure that any new implement components installed during repair include decals which are assigned to them by the manufacturer.
4. When applying decals to the implement, be sure to clean the surface to remove any dirt or residue. Where possible, sign placement should protect the sign from abrasion, damage, or obstruction from mud, dirt, oil etc.

DANGER

- **Do not allow anyone to ride on the tractor or implement. Riders could be struck by foreign objects or thrown from the implement.**
- **Never allow children to operate equipment.**
- **Keep bystanders away from implement during operation.**

Transporting Safety

IMPORTANT

It is the responsibility of the owner/operator to comply with all state and local laws.

1. When transporting the implement on a road or highway, use adequate warning symbols, reflectors, lights and slow moving vehicle sign as required. Slow moving tractors and towed implements can create a hazard when driven on public roads. They are difficult to see, especially at night.

2. Do not tow an implement that, when fully loaded, weighs more than 1.5 times the weight of the towing vehicle.
3. Carry reflectors or flags to mark the tractor and implement in case of breakdown on the road.

https://truckmanualshub.com/

4. Do not transport at speeds over 20 MPH under good conditions. Never travel at a speed which does not allow adequate control of steering and stopping. Reduce speed if towed load is not equipped with brakes.
5. Avoid sudden stops or turns because the weight of the implement may cause the operator to lose control of the tractor. Use a tractor heavier than the implement.
6. Use caution when towing behind articulated steering tractors; fast or sharp turns may cause the implement to shift sideways.
7. Keep clear of overhead power lines and other obstructions when transporting. Know the transport height and width of your implement.

Attaching, Detaching, and Storage

1. Do not stand between the tractor and implement when attaching or detaching implement unless both are not moving.
2. Block implement so it will not roll when unhitched from the tractor.
3. Store in an area where children normally do not play.

Maintenance Safety

1. Understand the procedure before doing the work. Use proper tools and equipment.
2. Make sure all moving parts have stopped.
3. Do not make adjustments or lubricate implement while it is in motion.
4. Block the implement so it will not roll when working on or under it to prevent injury.

High Pressure Fluid Safety

1. Escaping fluid under pressure can be nearly invisible and have enough force to penetrate the skin causing serious injury. Use a piece of cardboard, rather than hands, to search for suspected leaks.
2. Any fluid injected into the skin must be surgically removed within a few hours or gangrene may result.
3. Avoid the hazard by relieving pressure before disconnecting hydraulic lines.

Protective Equipment

1. Wear protective clothing and equipment.
2. Wear clothing and equipment appropriate for the job. Avoid loose fitting clothing.

3. Because prolonged exposure to loud noise can cause hearing impairment or hearing loss, wear suitable hearing protection, such as earmuffs or earplugs.

Chemical Safety

1. Agricultural chemicals can be dangerous. Improper use can seriously injure persons, animals, plants, soil and property.
2. Read chemical manufacture's instructions and store or dispose of unused chemicals as specified.
3. Handle chemicals with care and avoid inhaling smoke from any type of chemical fire.
4. Store or dispose of unused chemicals as specified by the chemical manufacturer.

Prepare for Emergencies

1. Keep a First Aid Kit and Fire Extinguisher handy.
2. Keep emergency numbers for doctor, ambulance, hospital and fire department near the phone.

Tire Safety

1. Tire changing can be dangerous and should be performed by trained personnel using correct tools and equipment.
2. When inflating tires, use a clip-on chuck and extension hose long enough to allow you to stand to one side, not in front of or over the tire assembly. Use a safety cage if available.
3. When removing and installing wheels use wheel-handling equipment adequate for the weight involved.

https://truckmanualshub.com/

Safety Chain

1. Use a chain with a strength rating equal to or greater than the gross weight of towed machinery, which is 10,100 pounds minimum in accordance with ASAE S338.2 specifications. If two or more implements are pulled in tandem, a larger chain may be required. Chain capacity must be greater that the TOTAL weight of all towed implements.
2. A second chain should be used between each implement.
3. Attach the chain to the tractor drawbar support or specified anchor location. Allow only enough slack in the chain to permit turning. The distance from hitch pin to attachment point or intermediate support point should not exceed 9 inches.
4. Replace the chain if any links or end fittings are broken, stretched or damaged.
5. Do not use a safety chain for towing.

https://truckmanualshub.com/

Chapter 2

Standard Specifications

Model Specifications

2511 Zone Commander - Auto-Reset Models					
Model Number	**Number of Shanks**	**Shank Spacing**	**Shank Extensions**	**Transport Width**	**Estimated Weight**
2511N-3-30	3	30”	NONE	9’ 3”	3,230 LBS.
2511N-4-30	4	30”	NONE	9’ 3”	3,825 LBS.
2511-4-30	4	30”	NONE	11’ 6”	4,249 LBS.
2511N-5-30	5	30”	12” BOLT-ON	12’ 0”	4,715 LBS.
2511-5-30	5	30”	NONE	11’ 6”	4,890 LBS.
2511-6-30	6	30”	12” BOLT-ON	13’ 5”	5,760 LBS.
2511-7-30	7	30”	27” BOLT-ON	15’ 11”	6,490 LBS.
2511F-7-30	7	30”	NONE	14’ 4”	7,270 LBS.
2511F-8-30	8	30”	12” BOLT-ON	16’ 1”	8,255 LBS.
2511F-9-30	9	30”	27” BOLT-ON	14’ 4”	8,885 LBS.

2511 Zone Commander - Rigid Shear Bolt Models					
Model Number	**Number of Shanks**	**Shank Spacing**	**Shank Extensions**	**Transport Width**	**Estimated Weight**
2511N-3-30	3	30”	NONE	9’ 3”	2,410 LBS.
2511N-4-30	4	30”	NONE	9’ 3”	2,735 LBS.
2511-4-30	4	30”	NONE	11’ 6”	3,159 LBS.
2511N-5-30	5	30”	12” BOLT-ON	12’ 0”	3,345 LBS.
2511-5-30	5	30”	NONE	11’ 6”	3,515 LBS.
2511-6-30	6	30”	12” BOLT-ON	13’ 5”	4,120 LBS.
2511-7-30	7	30”	27” BOLT-ON	15’ 11”	4,551 LBS.
2511F-7-30	7	30”	NONE	14’ 4”	5,520 LBS.
2511F-8-30	8	30”	12” BOLT-ON	16’ 1”	6,395 LBS.
2511F-9-30	9	30”	27” BOLT-ON	14’ 4”	6,590 LBS.

https://truckmanualshub.com/

Tire Inflation			
Tire Size	**Tire Manufacturer**	**Ply/Load Rating**	**Inflation Pressure (Psi) (Max.)**
20.5 X 8.0-10	Firestone	Load Range D/ 1,320 LBS.	70 psi.

Recommended Torque Specification For Lug Bolts and Nuts	
Bolt Size	**Torque (FT. LBS.)**
9/16-18 (Heavy Duty Disc)	80 - 90 FT. LBS.
5/8-18 (Heavy Duty Disc)	85 - 100 FT. LBS.

https://truckmanualshub.com/

General Torque Specifications

(rev. 4/97)

This chart provides tightening torques for general purpose applications when special torques are not specified on process or drawing. Assembly torques apply to plated nuts and capscrews assembled without supplemental lubrication (as received condition). They do not apply if special graphite moly-disulfide or other extreme pressure lubricants are used. When fasteners are dry (solvent cleaned) add 33% to as received condition torque. Bolt head identification marks indicate grade and may vary from manufacturer to manufacturer. Thick nuts must be used on grade 8 capscrews. Use value in [ ] if using prevailing torque nuts

TORQUE SPECIFIED IN FOOT POUNDS

UNC SIZE	SAE Grade 2	SAE Grade 5	SAE Grade 8	UNF SIZE	SAE Grade 2	SAE Grade 5	SAE Grade 8
1/4-20	4 [5]	6 [7]	9 [11]	1/4-28	5 [6]	7 [9]	10 [12]
5/16-18	8 [10]	13 [13]	18 [22]	5/16-24	9 [11]	14 [17]	20 [25]
3/8-16	15 [19]	23 [29]	35 [42]	3/8-24	17 [21]	25 [31]	35 [44]
7/16-14	24 [30]	35 [43]	55 [62]	7/16-20	27 [34]	40 [50]	60 [75]
1/2-13	35 [43]	55 [62]	80 [100]	1/2-20	40 [50]	65 [81]	90 [112]
9/16-12	55 [62]	80 [100]	110 [137]	9/16-18	60 [75]	90 [112]	130 [162]
5/8-11	75 [94]	110 [137]	170 [212]	5/8-18	85 [106]	130 [162]	180 [225]
3/4/10	130 [162]	200 [250]	280 [350]	3/4-16	150 [188]	220 [275]	320 [400]
7/8-9	125 [156]	320 [400]	460 [575]	7/8-14	140 [175]	360 [450]	500 [625]
1-8	190 [237]	408 [506]	680 [850]	1-14	210 [263]	540 [675]	760 [950]
1-1/8-7	270 [337]	600 [750]	960 [1200]	1-1/8-12	300 [375]	660 [825]	1080 [1350]
1-1/4-7	380 [475]	840 [1050	1426 [1782]	1-1/4-12	420 [525]	920 [1150]	1500 [1875]
1-3/8-6	490 [612]	1010 [1375]	1780 [2225]	1-3/8-12	560 [700]	1260[1575]	2010 [2512]
1-1/2-6	650 [812]	1460 [1825]	2360 [2950]	1-1/2-12	730 [912]	1640[2050]	2660 [3325]

METRIC:

Coarse thread metric class 10.9 fasteners and class 10.0 nuts and through hardened flat washers, phosphate coated, Rockwell “C” 38-45. Use value in [ ] if using prevailing torque nuts

Nominal thread diameter (mm)	Newton Meters (Standard Torque)	Foot Pounds (Standard Torque)	Nominal Thread Diameter (mm)	Newton Meters (Standard Torque)	Foot Pounds (Standard Torque
6	10 [14]	7 [10]	20	385 [450]	290 [335]
7	16 [22]	12 [16]	24	670 [775]	500 [625]
8	23 [32]	17 [24]	27	980 [1105]	730 [825]
10	46 [60]	34 [47]	30	1330 [1470]	990 [1090]
12	80 [125]	60 [75]	33	1790 [1950]	1340 [1450]
14	125 [155]	90 [115]	36	2325 [2515]	1730 [1870]
16	200 [240]	150 [180]	39	3010 [3210]	2240 [2380]
18	275 [330]	205 [245]			

https://truckmanualshub.com/

Hydraulic Fitting Torque Specifications

37 degree JIC, ORS, &ORB (REV. 10/97)

This chart provides tightening torques for general purpose applications when special torques are not specified on process or drawing. Assembly torques apply to plated nuts and capscrews assembled without supplemental lubrication (as received condition). They do not apply if special graphite moly-disulfide or other extreme pressure lubricants are used. When fasteners are dry (solvent cleaned) add 33% to as received condition torque. Bolt head identification marks indicate grade and may vary from manufacturer to manufacturer. Thick nuts must be used on grade 8 capscrews. Use value in [ ] if using prevailing torque nuts

TORQUE SPECIFIED IN FOOT POUNDS

PARKER® BRAND FITTINGS

Dash Size	37 Deg. JIC	O-ring (ORS)	O-ring boss
-4	11-13	15-17	13-15
-5	14-16	----------	21-23
-6	20-22	34-36	25-29
-8	43-47	58-62	40-44
-10	55-65	100-110	58-62
-12	80-90	134-146	75-85
-16	115-125	202-218	109-121
-20	160-180	248-272	213-237
-24	185-215	303-327	238-262
-32	250-290	----------	310-340

AEROQUIP® BRAND FITTINGS

Dash Size	37 Deg. JIC	O-ring (ORS)	O-ring boss
-4	11-12	10-12	14-16
-5	15-16	----------	16-20
-6	18-20	18-20	24-26
-8	38-42	32-35	50-60
-10	57-62	46-50	75-80
-12	79-87	65-70	125-135
-14	----------	----------	160-180
-16	108-113	92-100	200-220
-20	127-133	125-140	210-280
-24	158-167	150-165	270-360

GATES® BRAND FITTINGS

Dash Size	37 Deg. JIC	O-ring (ORS)	O-ring boss
-4	10-11	10-12	14-16
-5	13-15	----------	----------
-6	17-19	18-20	24-26
-8	34-38	32-40	37-44
-10	50-56	46-56	50-60
-12	70-78	65-80	75-83
-14	----------	65-80	----------
-16	94-104	92-105	111-125
-20	124-138	125-140	133-152
-24	156-173	150-180	156-184
-32	219-243	----------	----------

https://truckmanualshub.com/

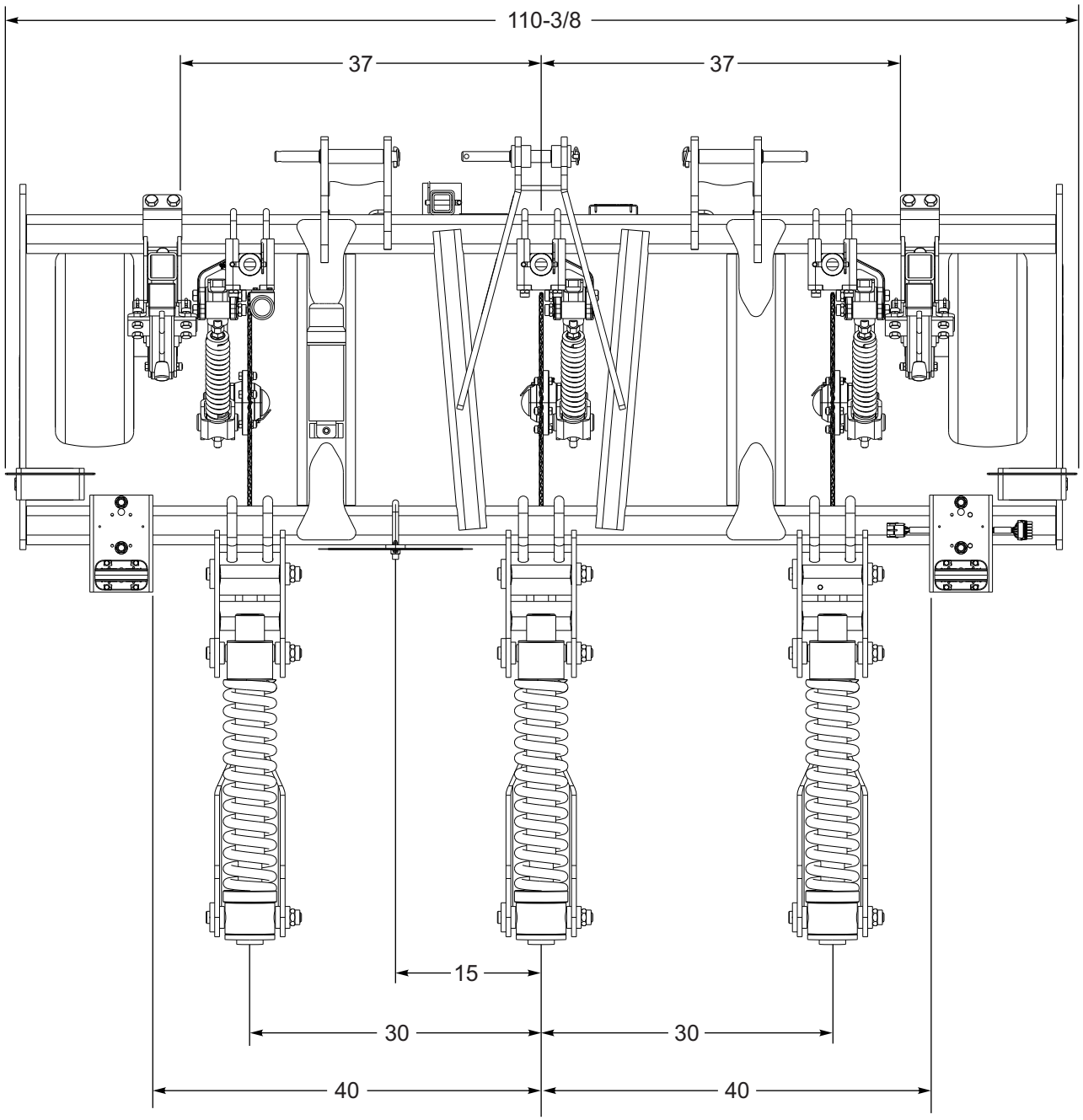

Figure 2-1: 2511N-3-30 Shank and Lighting Placement

https://truckmanualshub.com/

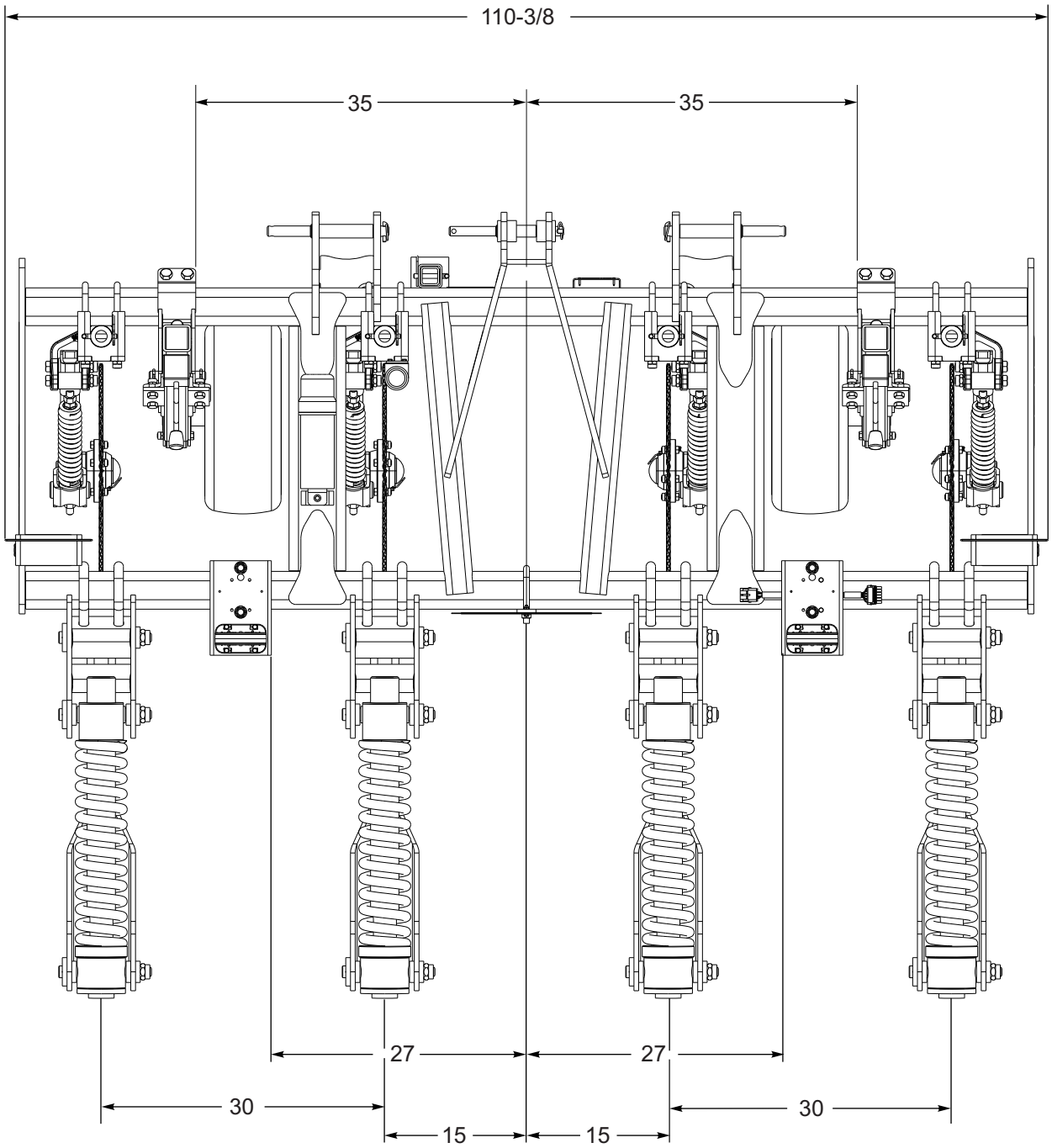

Figure 2-2: 2511N-4-30 Shank and Lighting Placement

https://truckmanualshub.com/

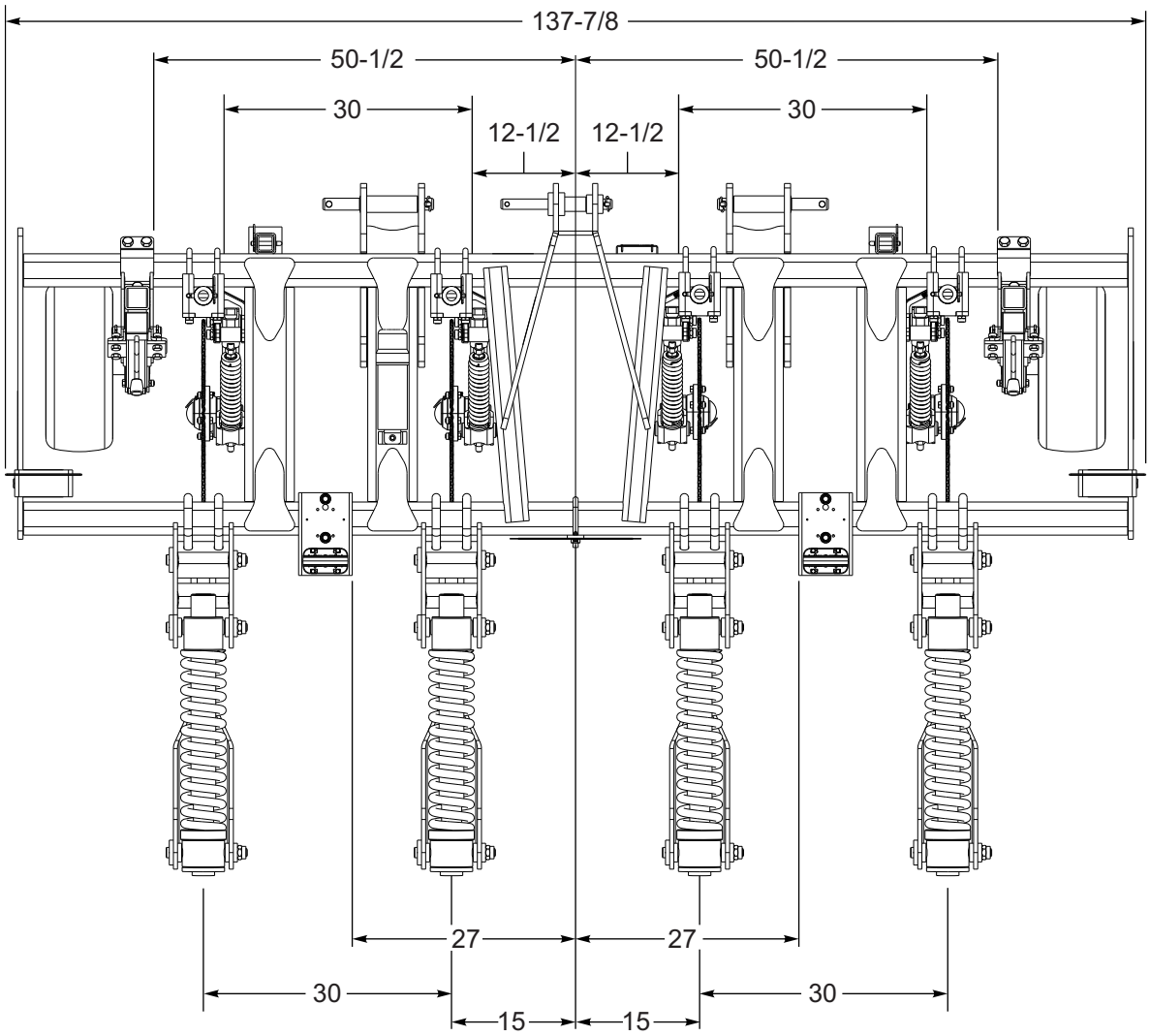

Figure 2-3: 2511-4-30 Shank and Lighting Placement

https://truckmanualshub.com/

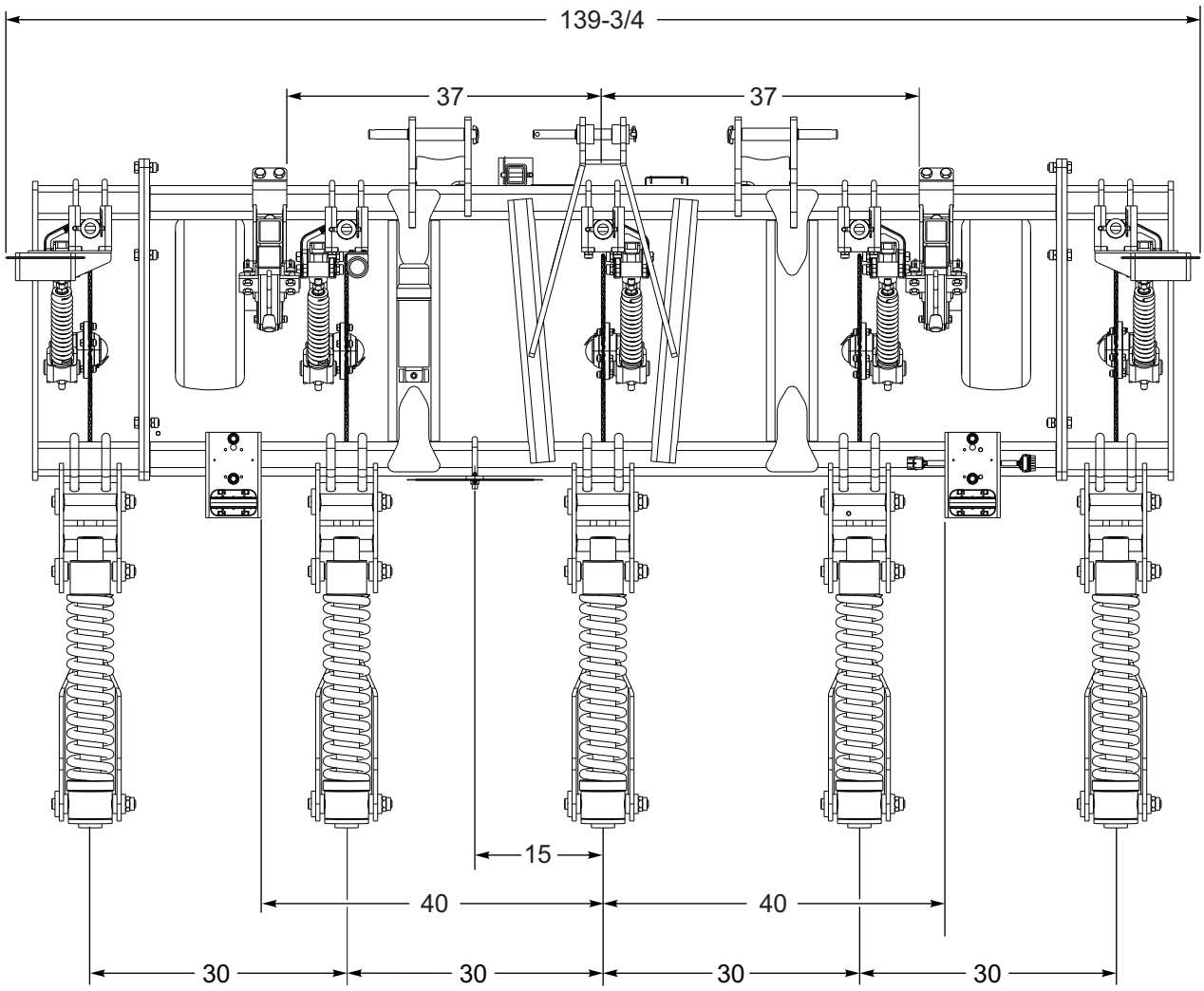

Figure 2-4: 2511N-5-30 Shank and Lighting Placement

https://truckmanualshub.com/

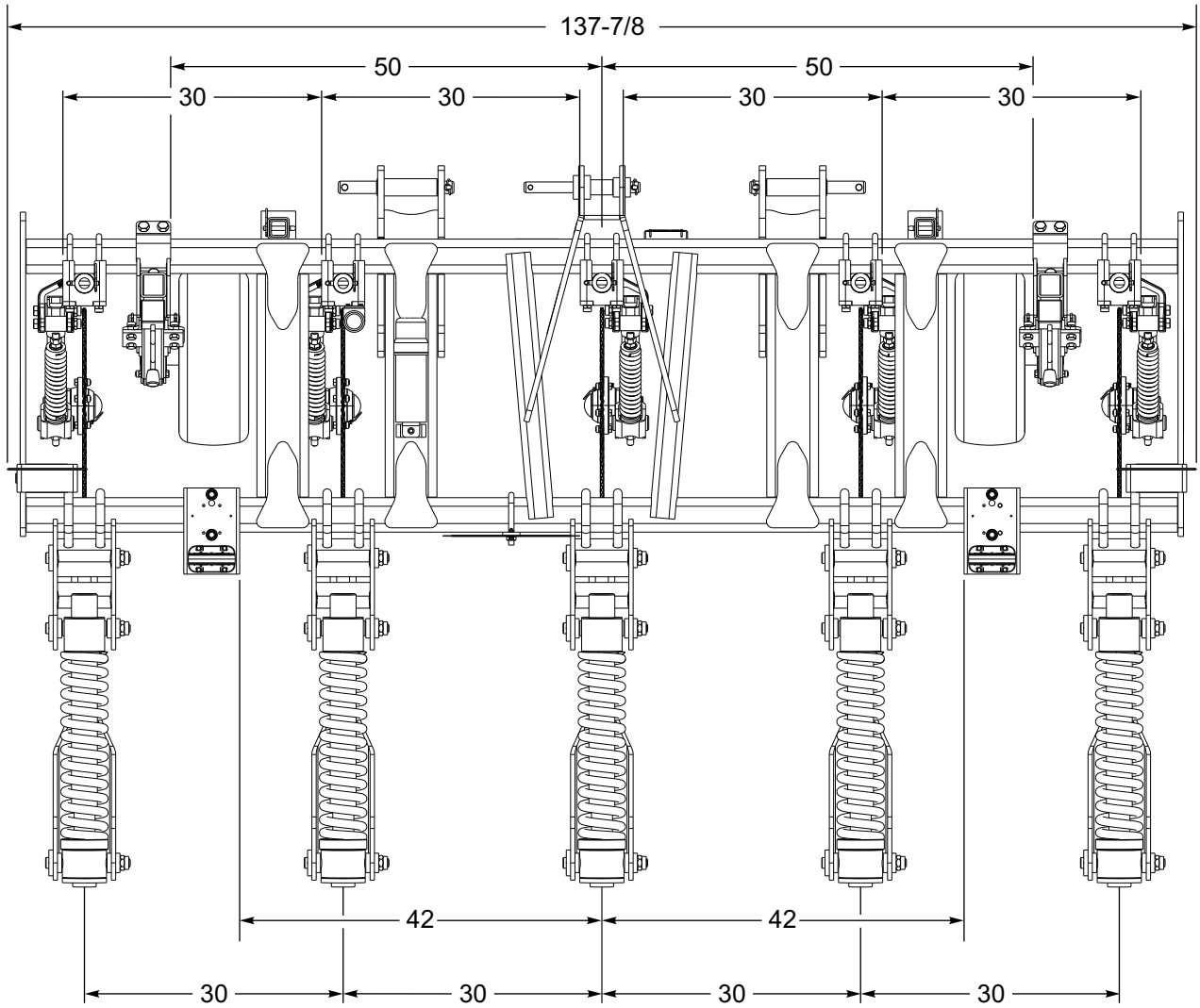

Figure 2-5: 2511-5-30 Shank and Lighting Placement

https://truckmanualshub.com/

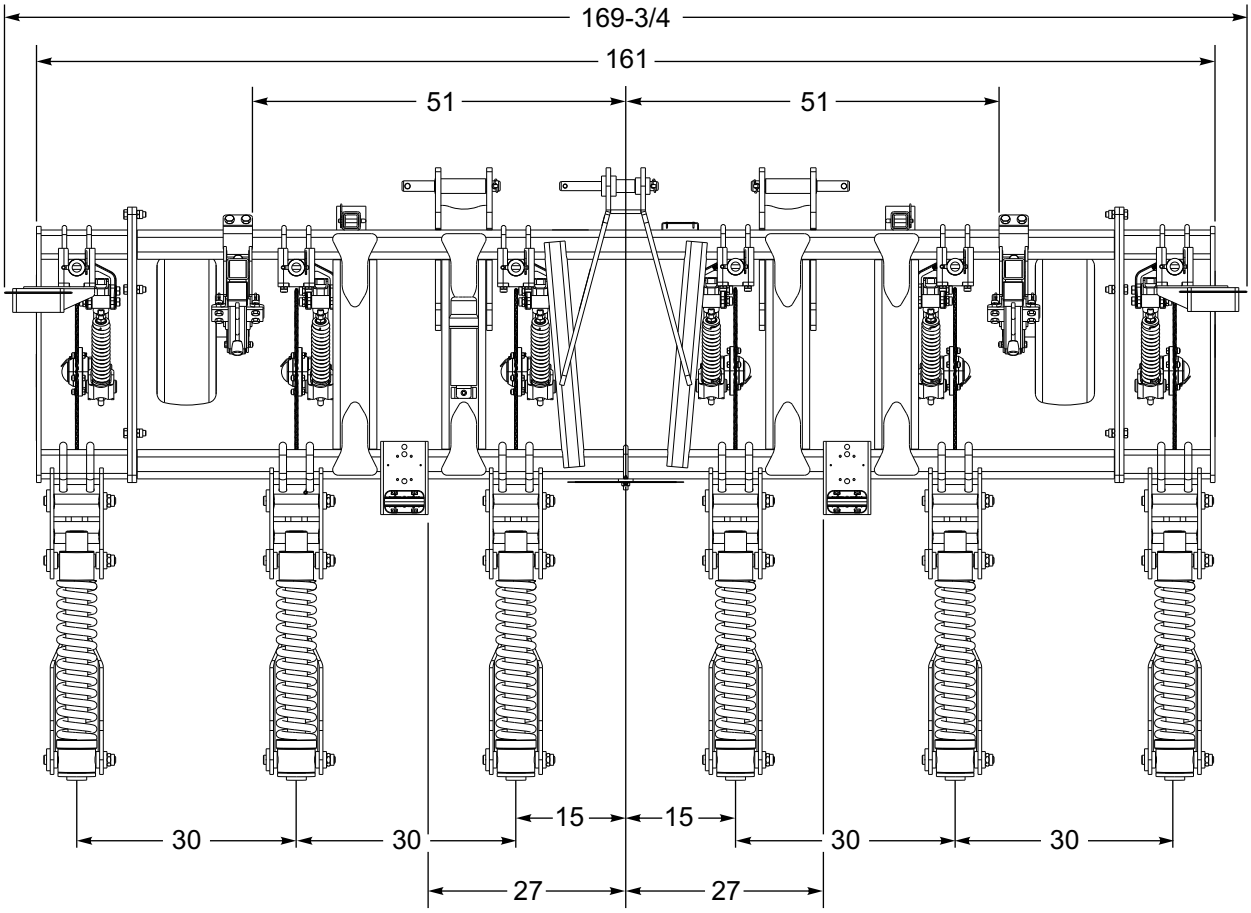

Figure 2-6: 2511-6-30 Shank and Lighting Placement

https://truckmanualshub.com/

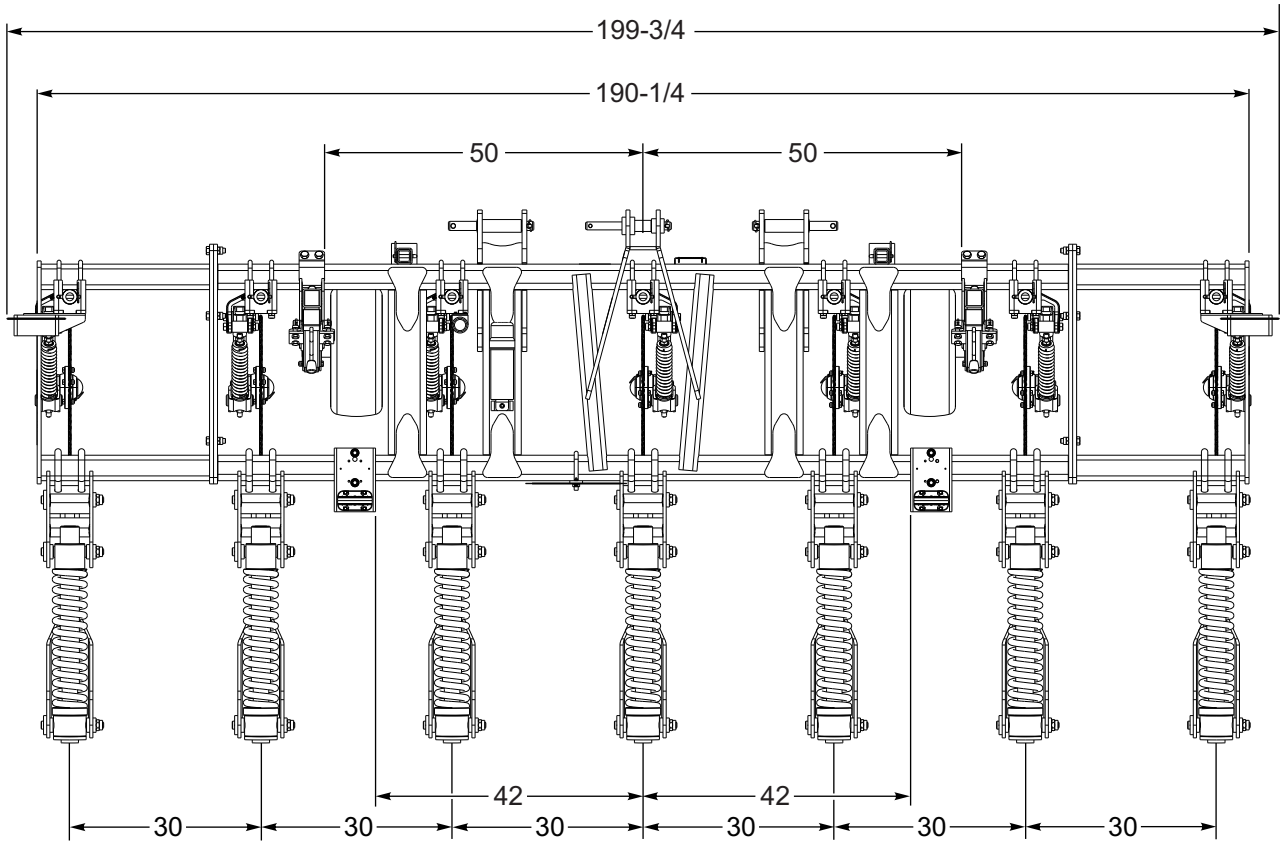

Figure 2-7: 2511-7-30 Shank and Lighting Placement

https://truckmanualshub.com/

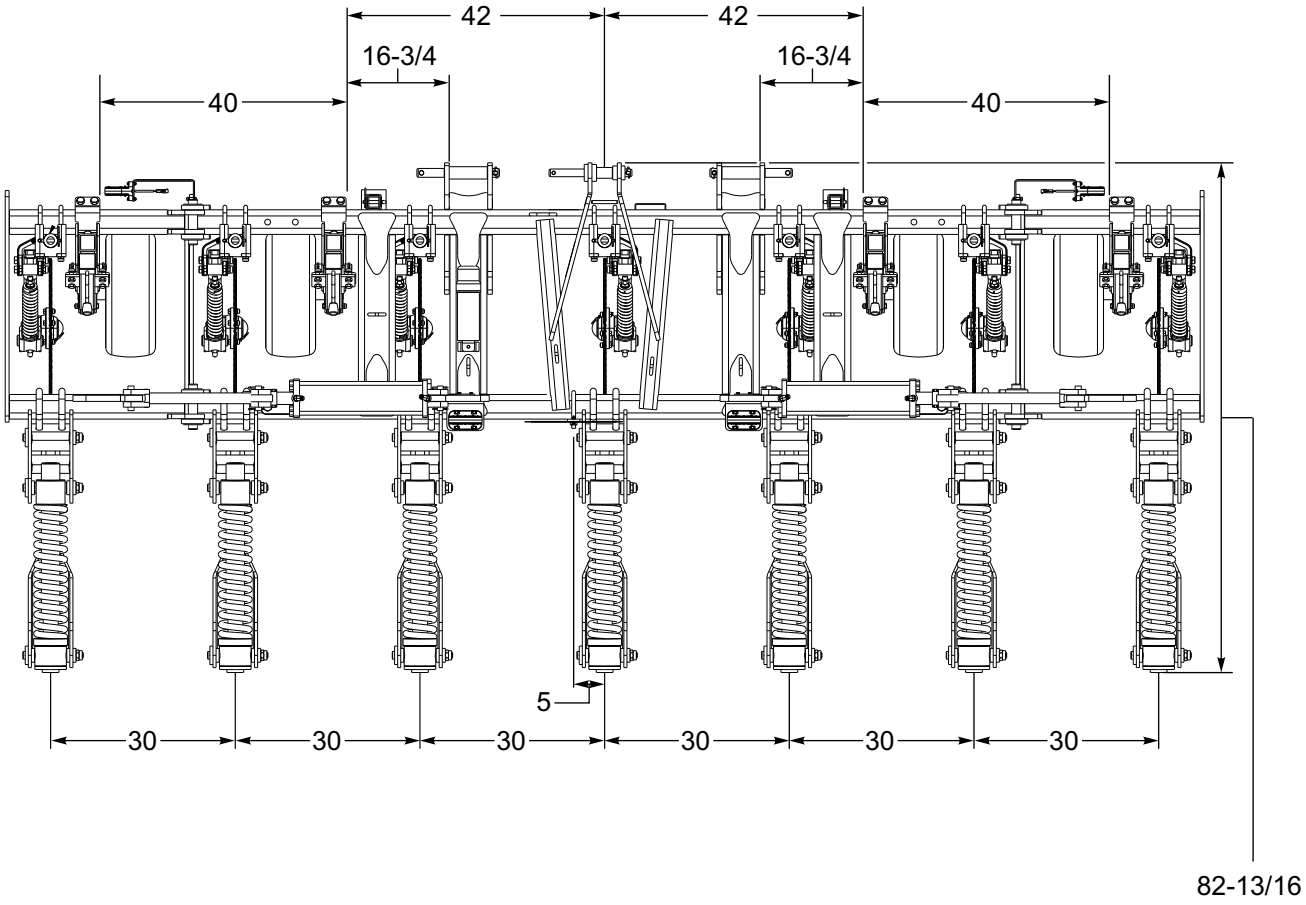

Figure 2-8: 2511F-7-30 Shank and Lighting Placement

https://truckmanualshub.com/

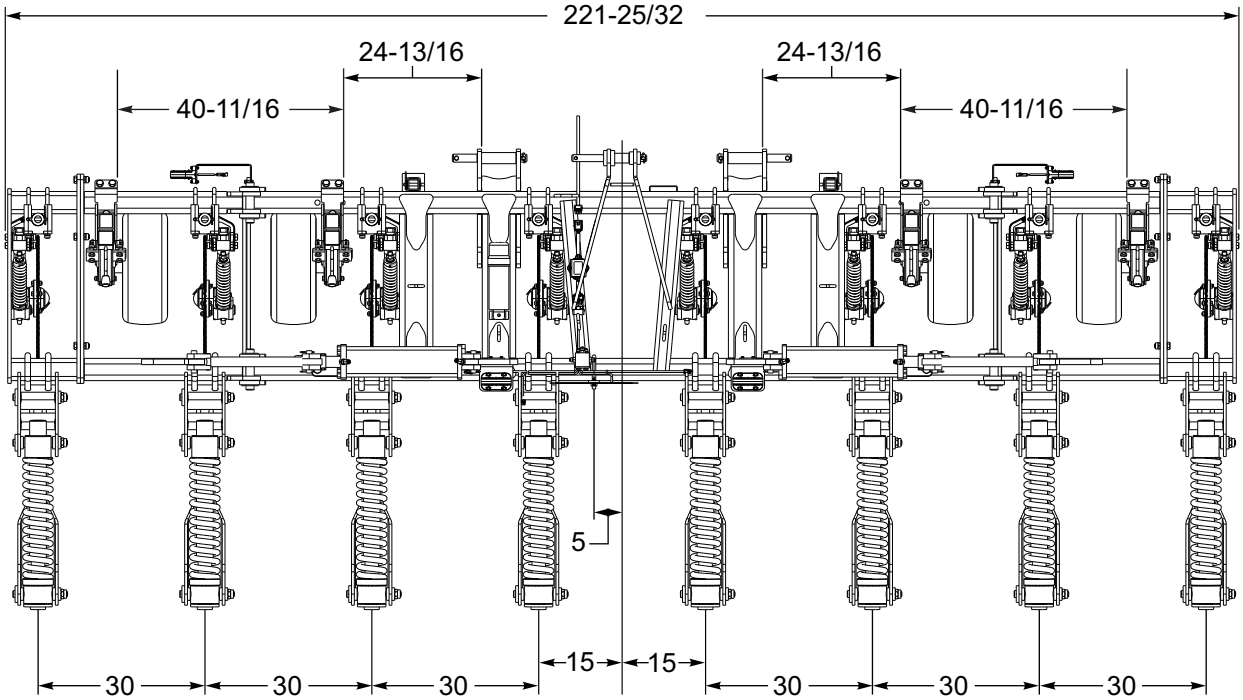

Figure 2-9: 2511F-8-30 Shank and Lighting Placement

https://truckmanualshub.com/

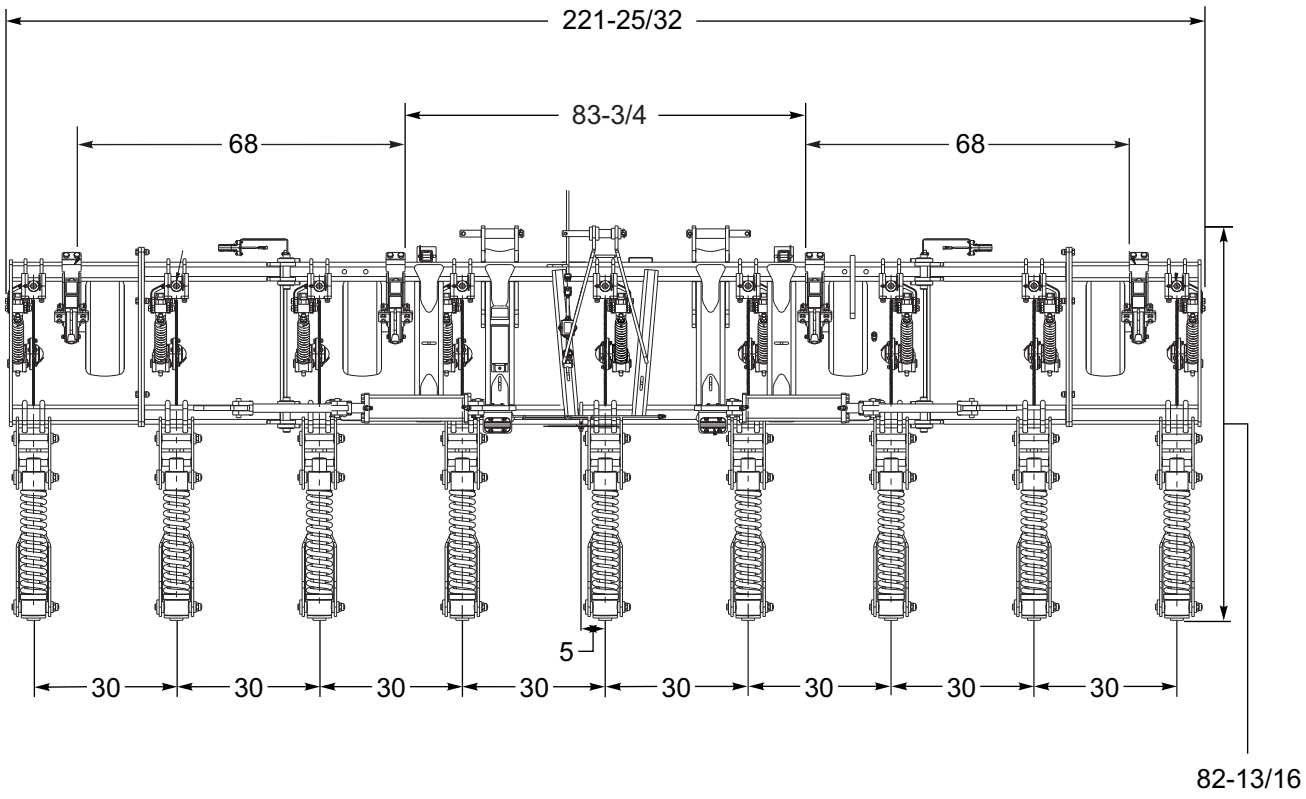

Figure 2-10: 2511F-9-30 Shank and Lighting Placement

https://truckmanualshub.com/

Chapter 3

Assembly Instructions

It is very important that your new Model 2511 Zone Commander be properly assembled, adjusted, and lubricated before use. Illustrations are provided in this section to show proper assembly procedures. Remove paint from grease fittings and replace any that are damaged or missing. Be sure to return bolts, clips, etc. to their original locations.

To ensure assemblies are aligned, **insert all bolts and leave the nuts loose until completion of final assembly**. Use lockwashers or flat washers where called for. Spread all cotter pins.

After completion of final assembly, tighten all nuts **evenly** to prevent misalignment, distortion, or binding. Tighten all bolts and nuts to the recommended torques shown on **Page 2-3**. Tighten all u-bolt legs evenly.

IMPORTANT

Check all bolt lengths, nut sizes, etc., from the parts book before assembly. Different models of the 2511 Zone Commander use different size bolts.

DANGER

Coulter blades are extremely sharp. use extreme care when working on or near coulter blades. Do not allow coulters to roll over or fall on any part of body. Do not allow wrenches to slip when working near coulter blades. Never push wrenches towards coulter blades. Do not climb over machine above coulter blades. Failure to stay clear of coulter blade edges may result in serious personal injury or death.

DANGER

To prevent accidental lowering:

1. **All hydraulically elevated equipment must be locked out using the cylinder lockouts.**
2. **Lower equipment to the ground while servicing or when it is idle.**

Failure to take measures to prevent accidental lowering may result in serious personal injury or death.

CAUTION

Be sure to bleed the hydraulic system of all air in lines after installation. Failure to bleed the system of all air may cause the machine to operate improperly.

https://truckmanualshub.com/

Assembly Preparation

1. Hook up the Zone Commander to a tractor using the three-point hitch.
2. Raise the unit about 36” and place stands under the main frame to prevent accidental lowering.

WARNING

Do not attempt to lift heavy parts (such as the frame), manually. Use a hoist or a forklift to move these parts into position.

Jackstand Installation

1. Remove jackstand(s) from frame.
2. Remove rigid gauge adjustment pin and 3/16 hair pin cotter from outer jackstand tube.
3. Insert jackstand through bottom of outer jackstand tube and pin at desired level with rigid gauge adjustment pin and 3/16 hair pin cotter **(See Figure 3-1.)**

SMV Bracket Installation

1. Attach the SMV mounting bracket at a point where emblem is visible from rear of machine, using u-bolt and 5/8-11 flange head serrated nuts **(See Figure 3-1.)**
2. Attach SMV emblem to top of SMV mounting bracket using 1/4-20 x 1 hex head cap screws, flat washers, and hex lock nuts **(See Figure 3-14.)**

Tire and Wheel Assembly

1. All hubs and spindles come already assembled from the factory. Mount the tire and wheel assembly onto the hubs.

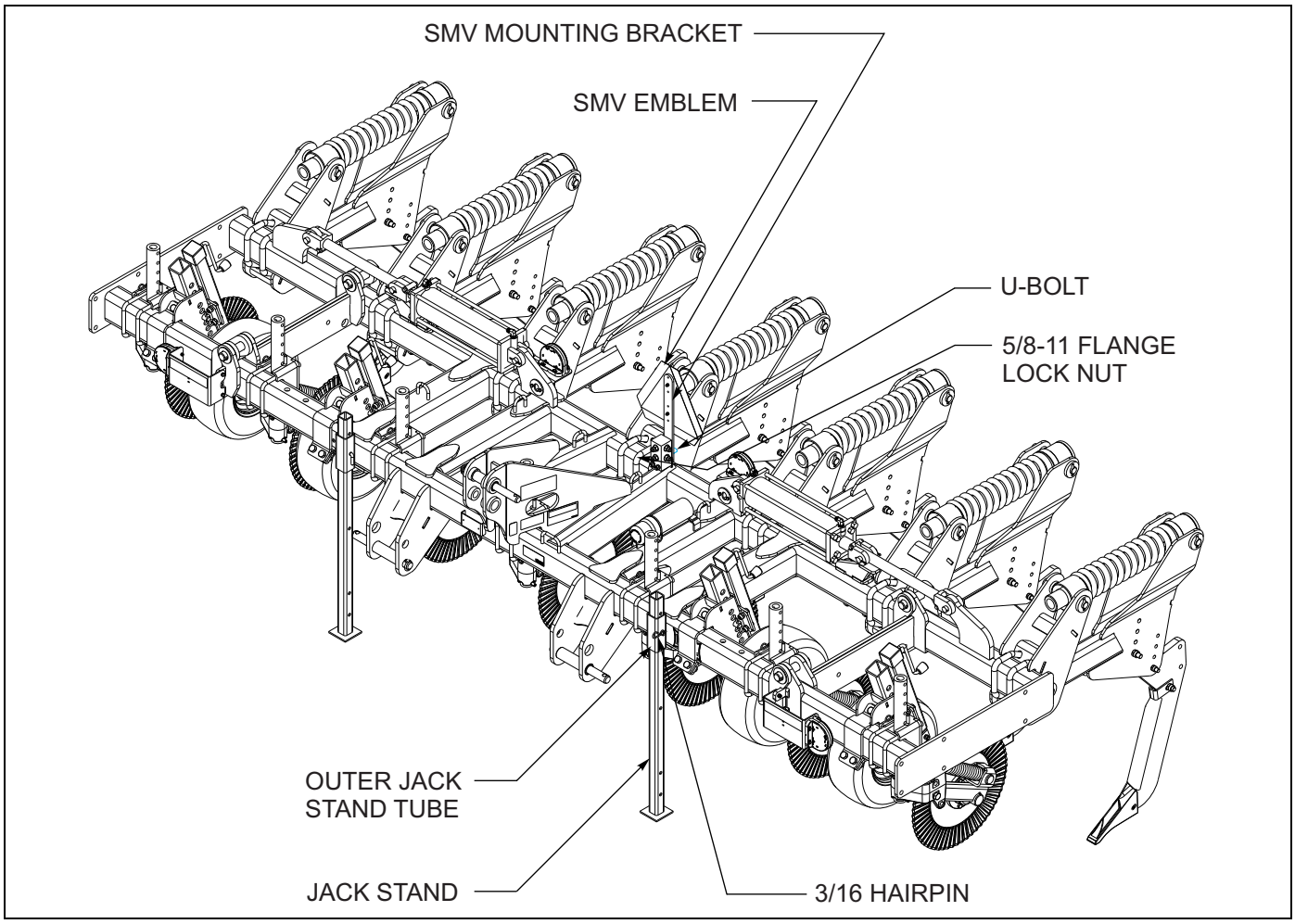

Figure 3-1: 2511 Series Parts Identification

https://truckmanualshub.com/

Auto-Reset Clamp and Shank Assembly

1. The spring clamp weldments are already located on the frame at the proper spacing.
2. Attach wearstrip to straight leg shank using wearstrip bracket, 3/4-10 x 3 hex head cap screw, and 3/4-10 hex lock nut **(See Figures 3-2 through 3-4.)**
3. Attach steel point to low disturbance straight leg shank using 1/2 x 2 and 5/16 x 2 spring slotted pins. Place pins with open ends oriented opposite of each other.
4. Attach top of shank point assembly to front of spring clamp assembly using 3/4-10 x 4 hex head cap screw and hex lock nut. Attach lower hole of shank point assembly to rear of spring clamp assembly using 5/8-11 x 3-3/4 hex head cap screw, connex bushing, and 5/8-11 hex lock nut.
5. Adjustment holes are provided in the spring clamp weldment to compensate for varying ground conditions and depths of operation.

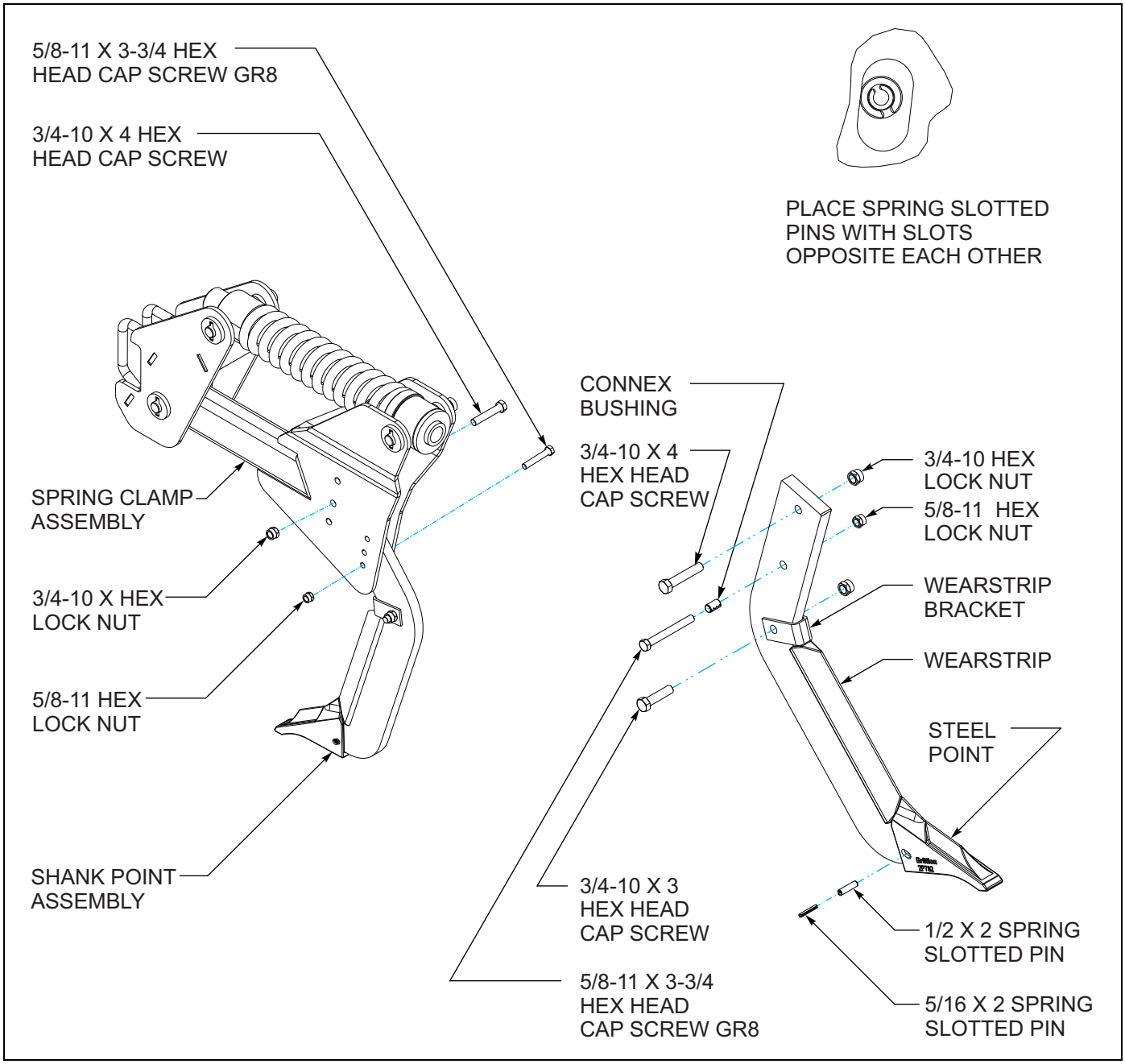

Figure 3-2: Auto-Reset Clamp and Straight Leg Shank Assembly

https://truckmanualshub.com/

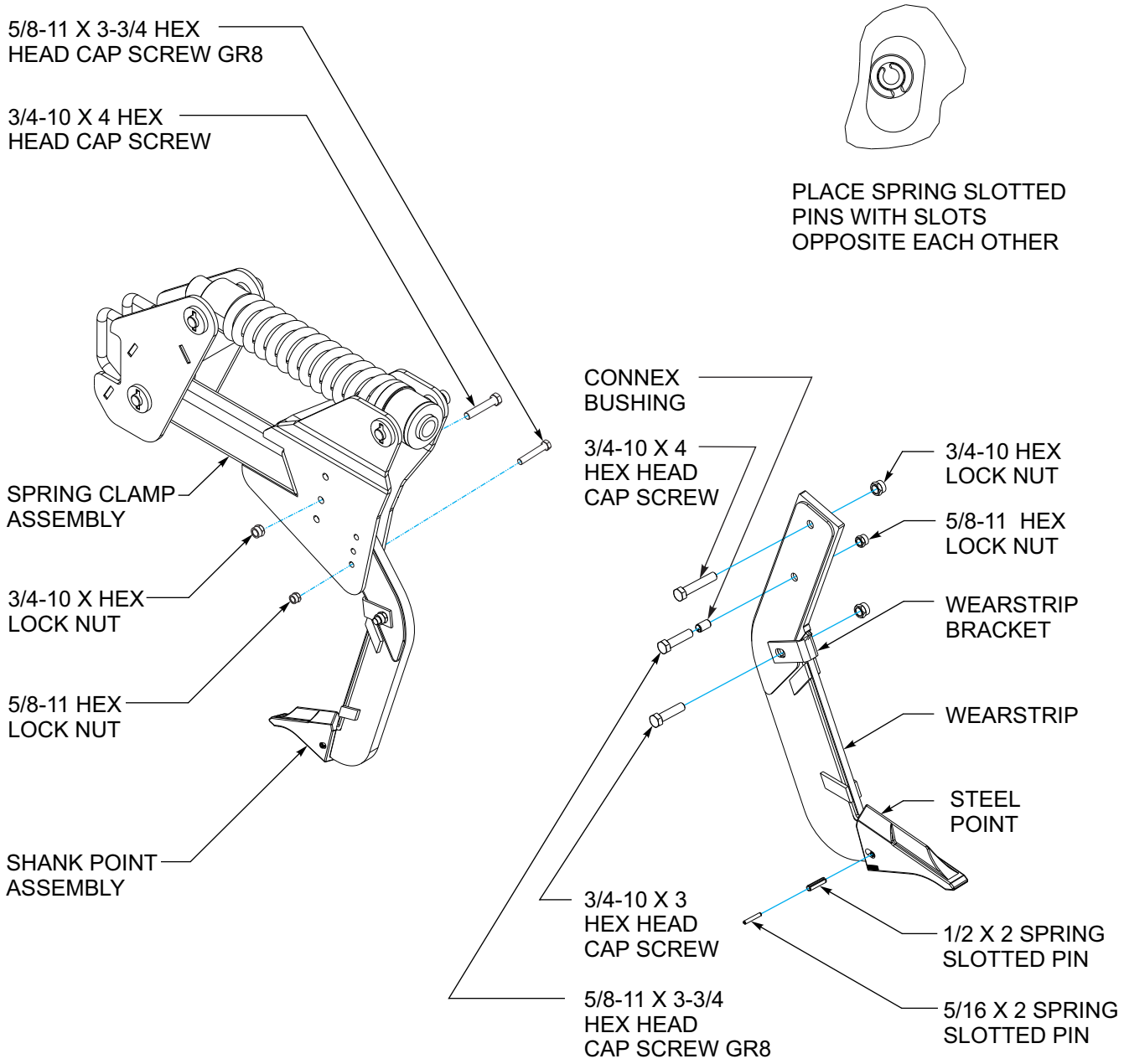

Figure 3-3: Auto-Reset Clamp and 3/4 Shank Assembly

https://truckmanualshub.com/

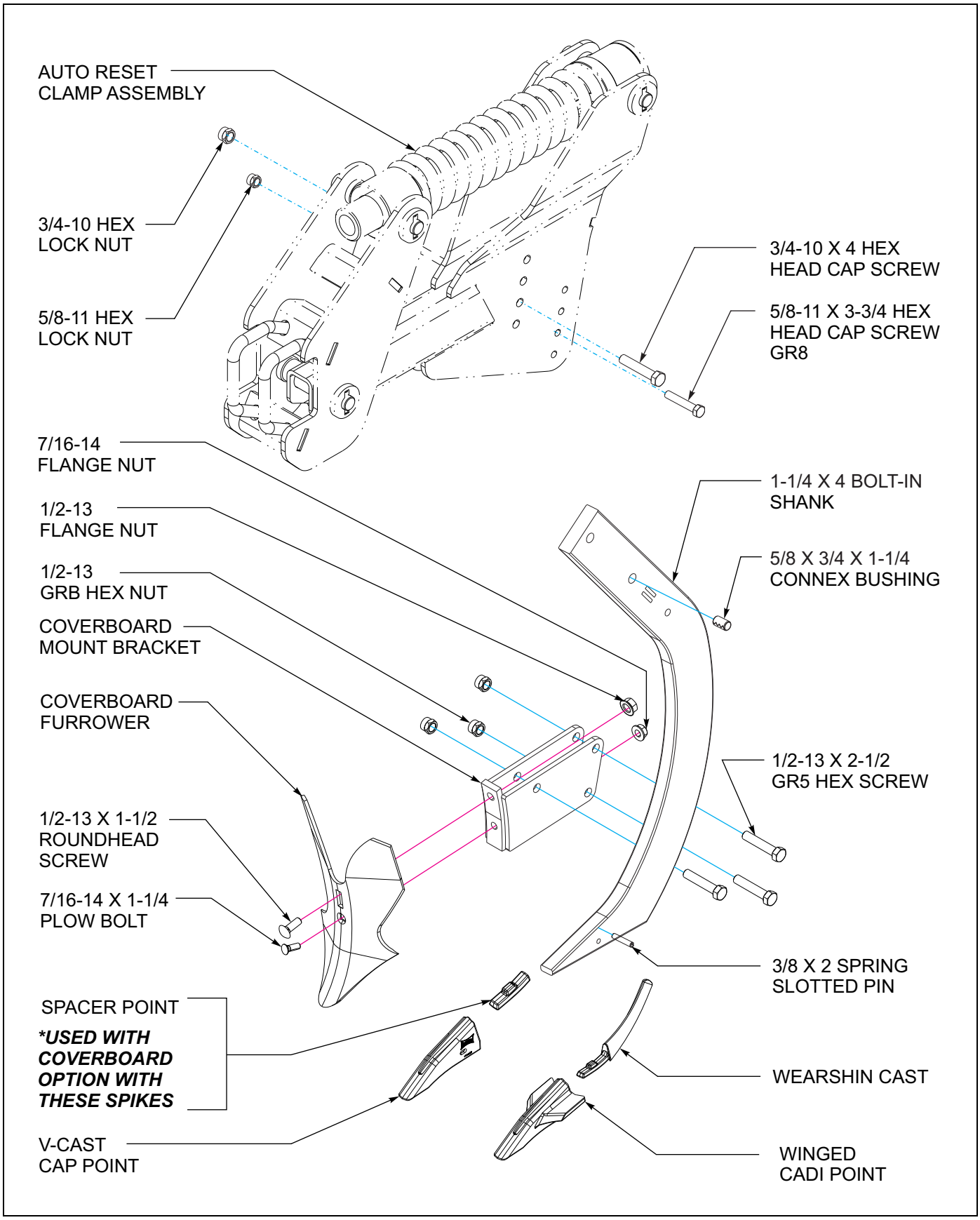

Figure 3-4: Auto-Reset Clamp and 1-1/4 Parobolic Shank Assembly

https://truckmanualshub.com/

RSB Clamp and Straight Shank Assembly

1. The rigid clamp assemblies are already located on the frame at the proper spacing.
2. Attach wearstrip to straight leg shank using wearstrip bracket, 3/4-10 x 3 hex head cap screw, and 3/4-10 hex lock nut **(See Figures 3-5 thru 3-7.)**
3. Attach steel point to low disturbance straight leg shank using 1/2 x 2 and 5/16 x 2 spring slotted pins. Place pins with open ends oriented opposite of each other.
4. Attach top of shank point assembly to front of spring clamp assembly using 3/4-10 x 4 hex head cap screw and hex lock nut. Attach lower hole of shank point assembly to rear of spring clamp assembly using 5/8-11 x 5-1/2 hex head cap screw, connex bushing, and 5/8-11 hex lock nut.

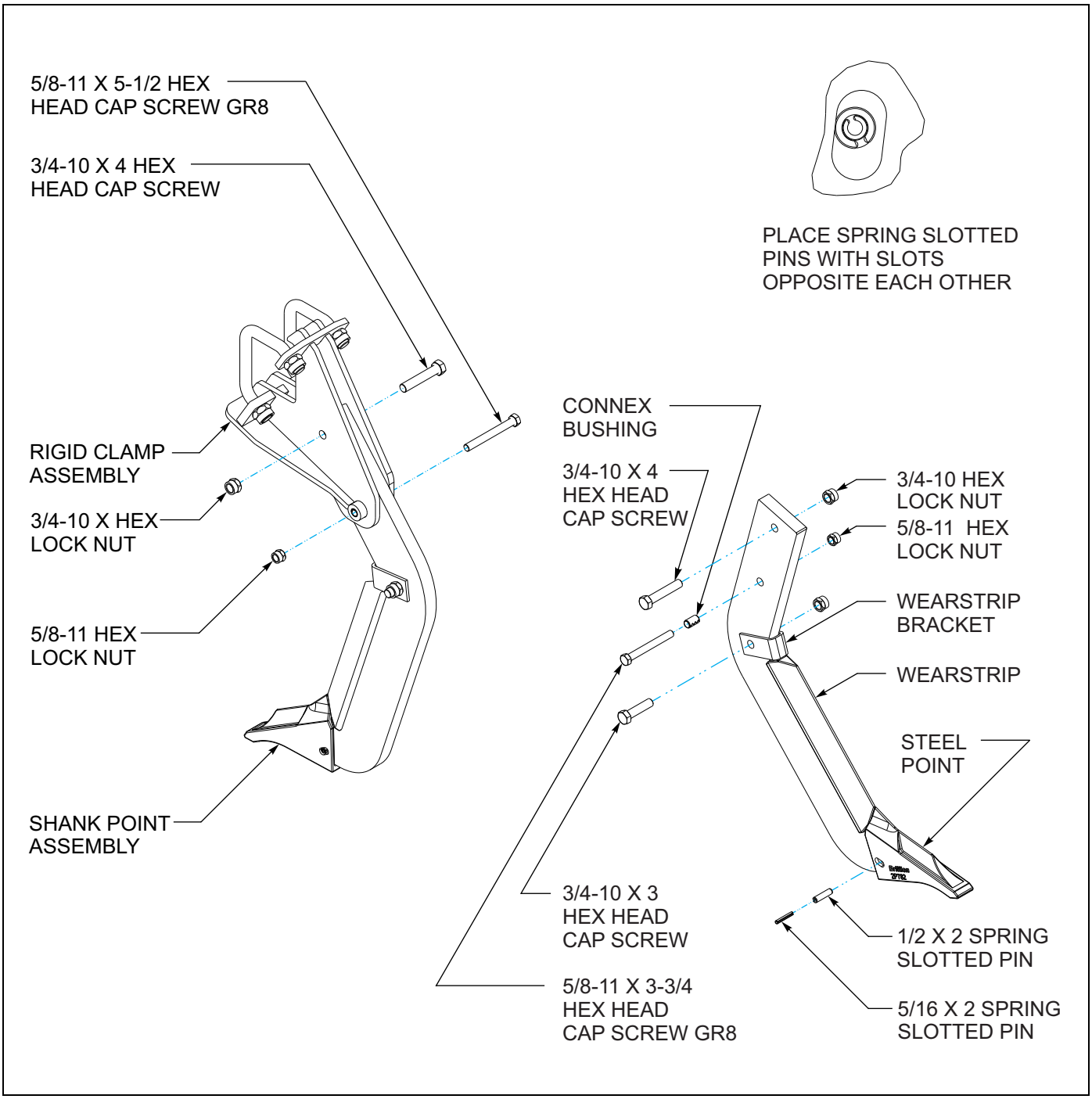

Figure 3-5: RSB Clamp and Straight Leg Shank Assembly

https://truckmanualshub.com/

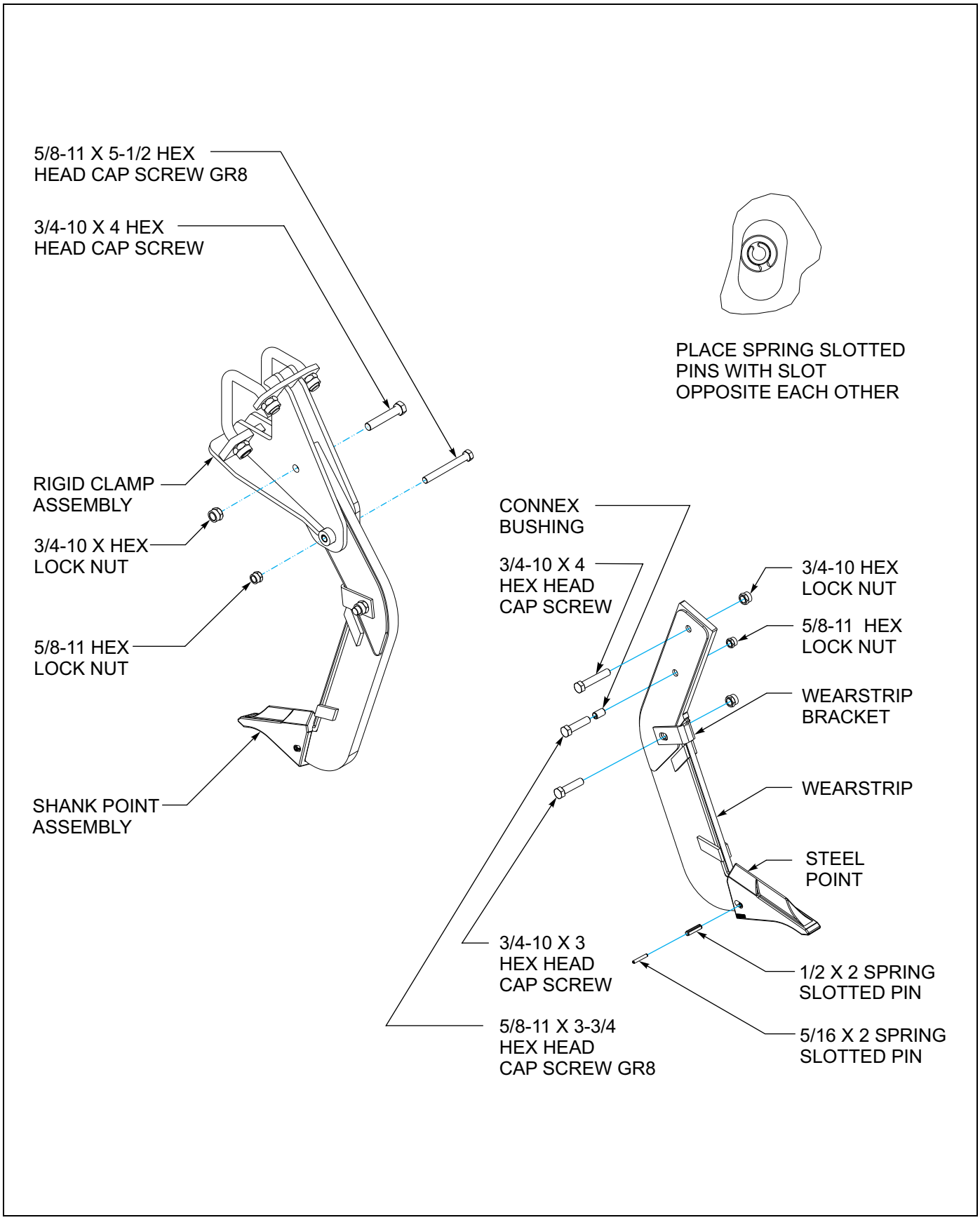

Figure 3-6: RSB Clamp and 3/4 Shank Assembly

https://truckmanualshub.com/

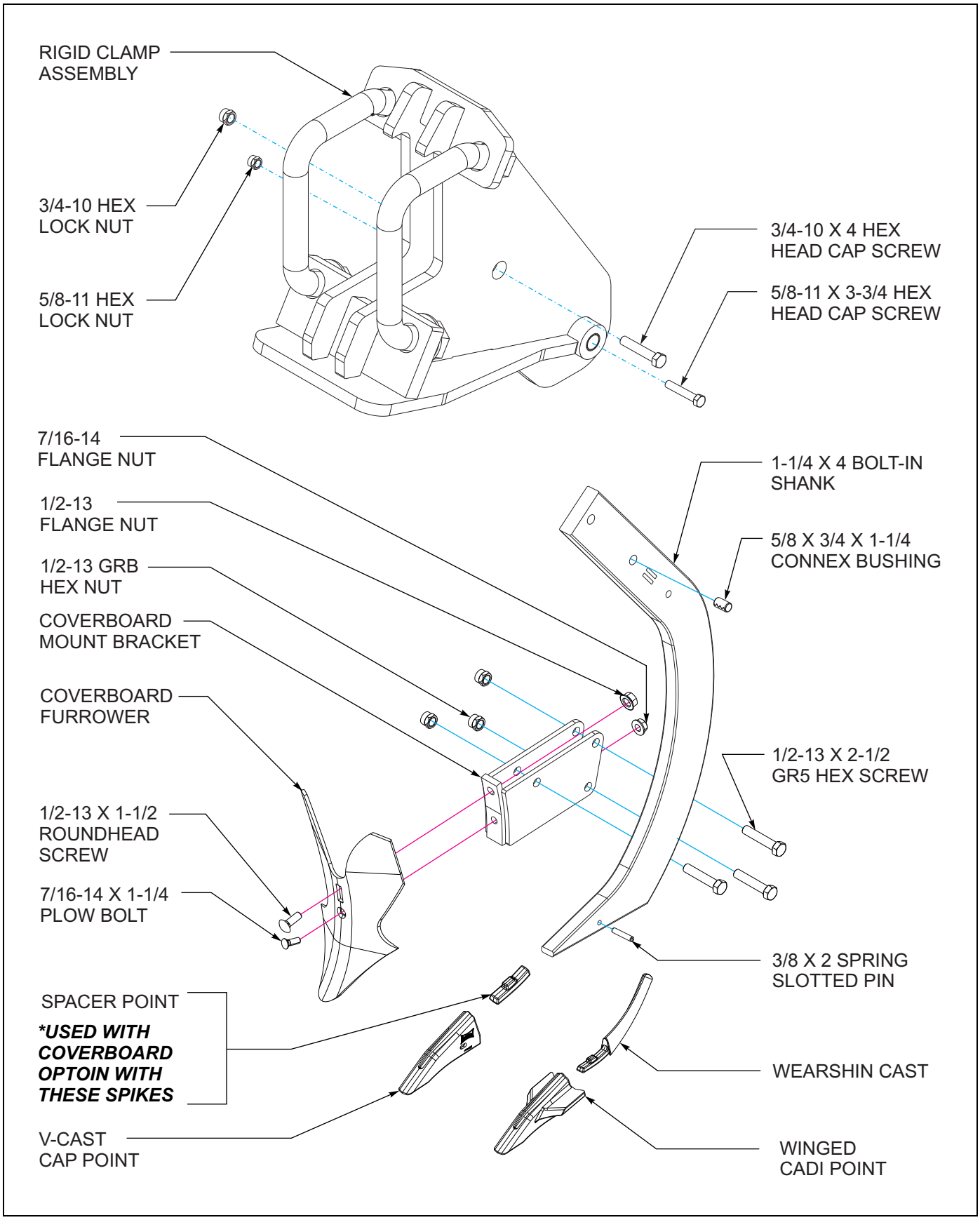

Figure 3-7: RSB Clamp and 1-1/4 Parobolic Shank Assembly

https://truckmanualshub.com/

Coverboard Installation

1. Insert three 1/2-13 x 2-1/2 hex screws into the coverboard bracket before attaching the coverboard furrower **(See Figure 3-7.)** Secure with 1/2-13 nuts and tighten only so that locking portion of nut engages the thread. The customer will tighten these nuts after mounting to shank.
2. Tighten the 7/16-14 flange nut to the 7/16-14 x 1-1/4 plow bolt before tightening the 1/2-13 hex nut to the 1/2-13 x 1-1/2 roundhead screw. This is to ensure that the point of the coverboard furrower is pulled tightly against the bracket. Make sure that the plow bolt head is flush with the surface of the coverboard furrower **(See Figure 3-8.)** This hardware should be tightened now.

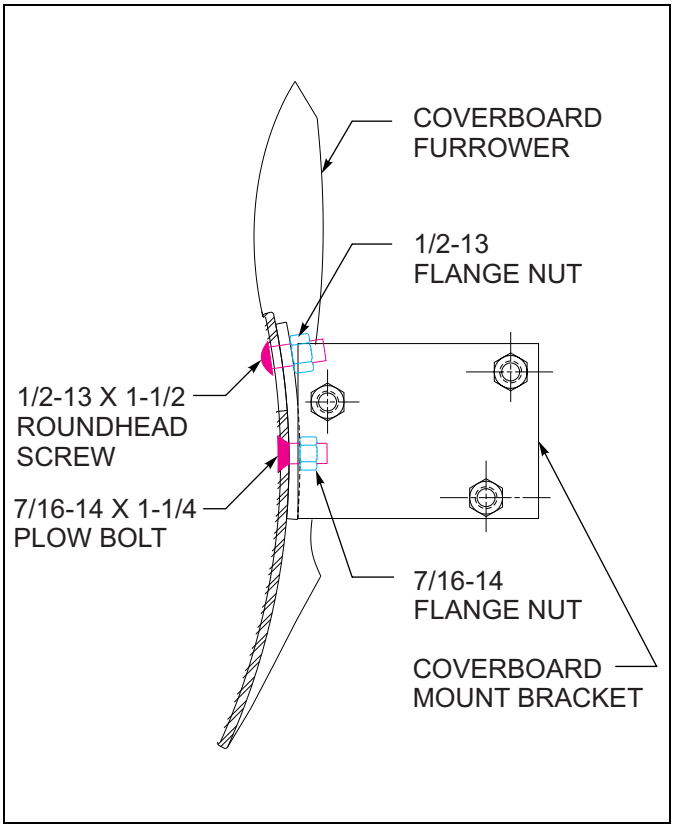

Figure 3-8: Coverboard Installation

Right Hand & Left Hand Coulter Assemblies

1. Assemble coulter adjustment tube to coulter assembly using roll pins 1/2 x 4 and 5/16 x 4. Assemble the coulter stop to the coulter adjustment tube using 1/2 x 4 screw and nut **(See Figure 3-9 and Figure 3-10.)**
2. Install the coulter adjustment tube and coulter assembly to the frame using the coulter clamp tube, 4 u-bolts, clamp plate and 5/8-11 lock nuts. Do not tighten nuts until the depth adjustment is completed.
3. Use adjustment pin and 3/16 hairpin to set desired depth. Tighten 5/8 lock nuts on the u-bolts.
4. Attach coulter blade to coulter assembly using 1/2 x 1-1/2 screws and locknuts.

https://truckmanualshub.com/

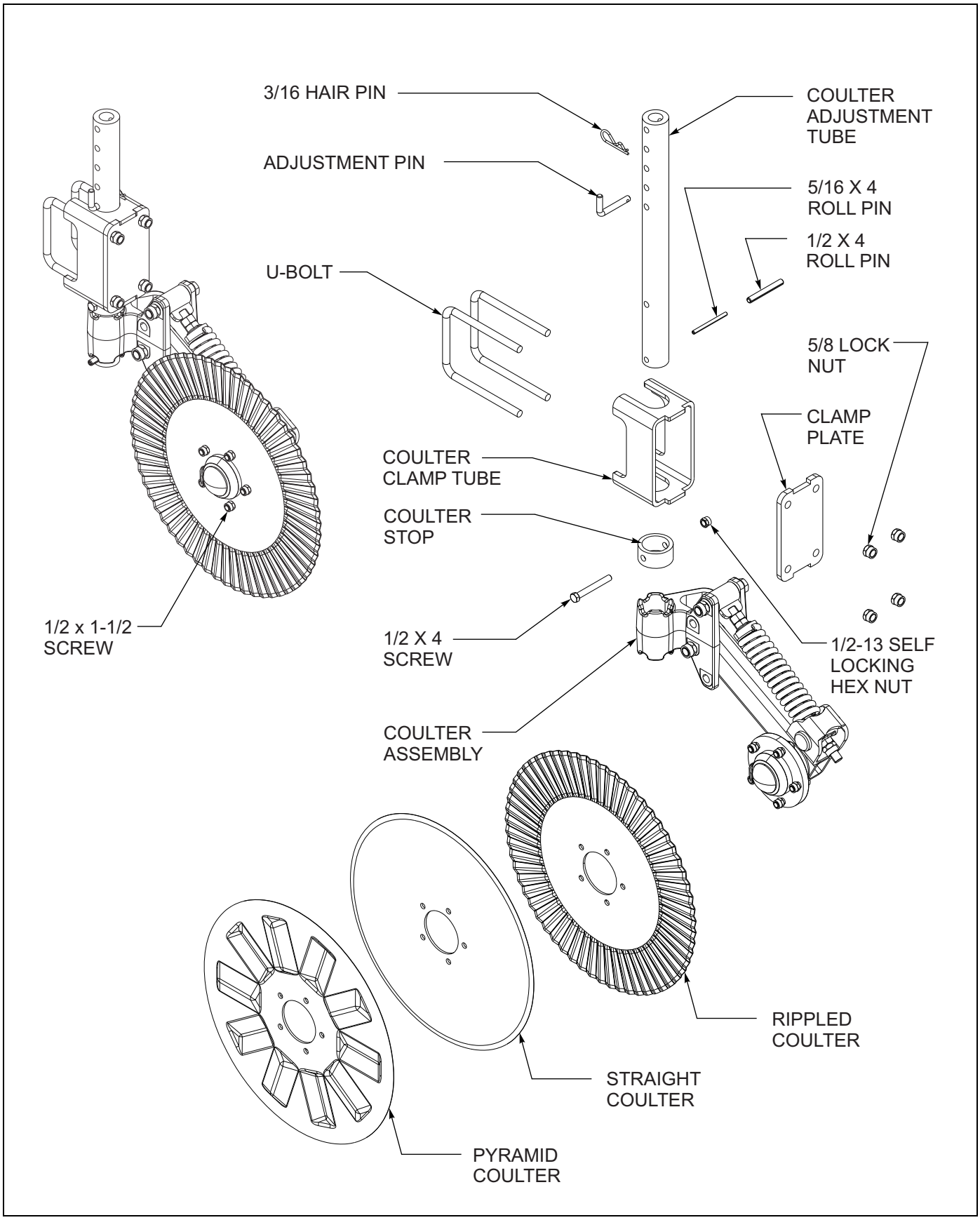

Figure 3-9: Right Hand Coulter Assembly

https://truckmanualshub.com/

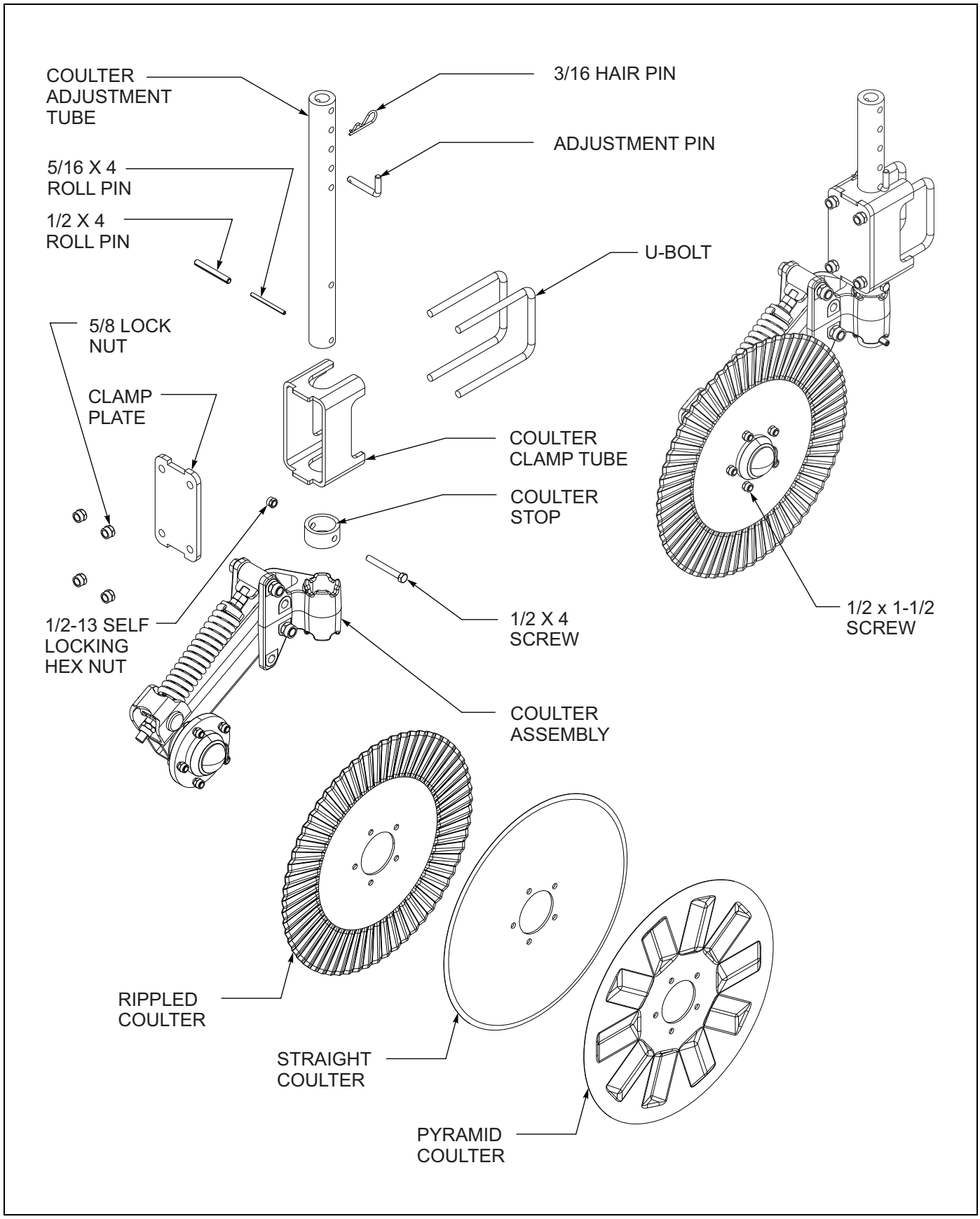

Figure 3-10: Left Hand Coulter Assembly

https://truckmanualshub.com/

Electrical Installation

1. Attach left and right light brackets with reflectors to frame using warning light bar, 1/2-13 x 7-1/2 hex head cap screws, and hex lock nuts **(See Figures 3-11 thru 3-14.)**
2. Attach ag amber single LED lamps to light brackets using 1/4-20 x 1-1/4 hex head cap screws and hex lock nuts.
3. Attach left tail light mount to frame assembly using u-bolt and 5/8-11 flange head serrated nuts.
4. Attach right tail light mount and ag flasher control module to frame assembly using u-bolt and 5/8-11 flange head serrated nuts. Be sure that the control module is set so that the 4 pin connector faces the right side of the machine.
5. Attach reflector assemblies and ag red single LED lamps to tail light mounts using 1/4-20 x 1-1/2 hex head cap screws and hex lock nuts.

IMPORTANT

Make sure lights are positioned for maximum visibility from the rear.

6. Install the LED warning light harness to the frame. Connect 2 pin and 3 pin ends to each of the warning lights. Connect 6 pin to the ag flasher control module.
7. Attach 7 pin/4pin 120” harness to frame. Connect 4 pin end to the ag flasher control module.
8. Ensure that the harnesses are clear of any moving parts and secure the harnesses with tie wraps provided.
9. Install the stor-away holder bracket on bolt in coulter clamp plate and assemble harness stor-away to bracket with 1/4-20 x 3/4 hex head cap screws and hex lock nuts.

https://truckmanualshub.com/

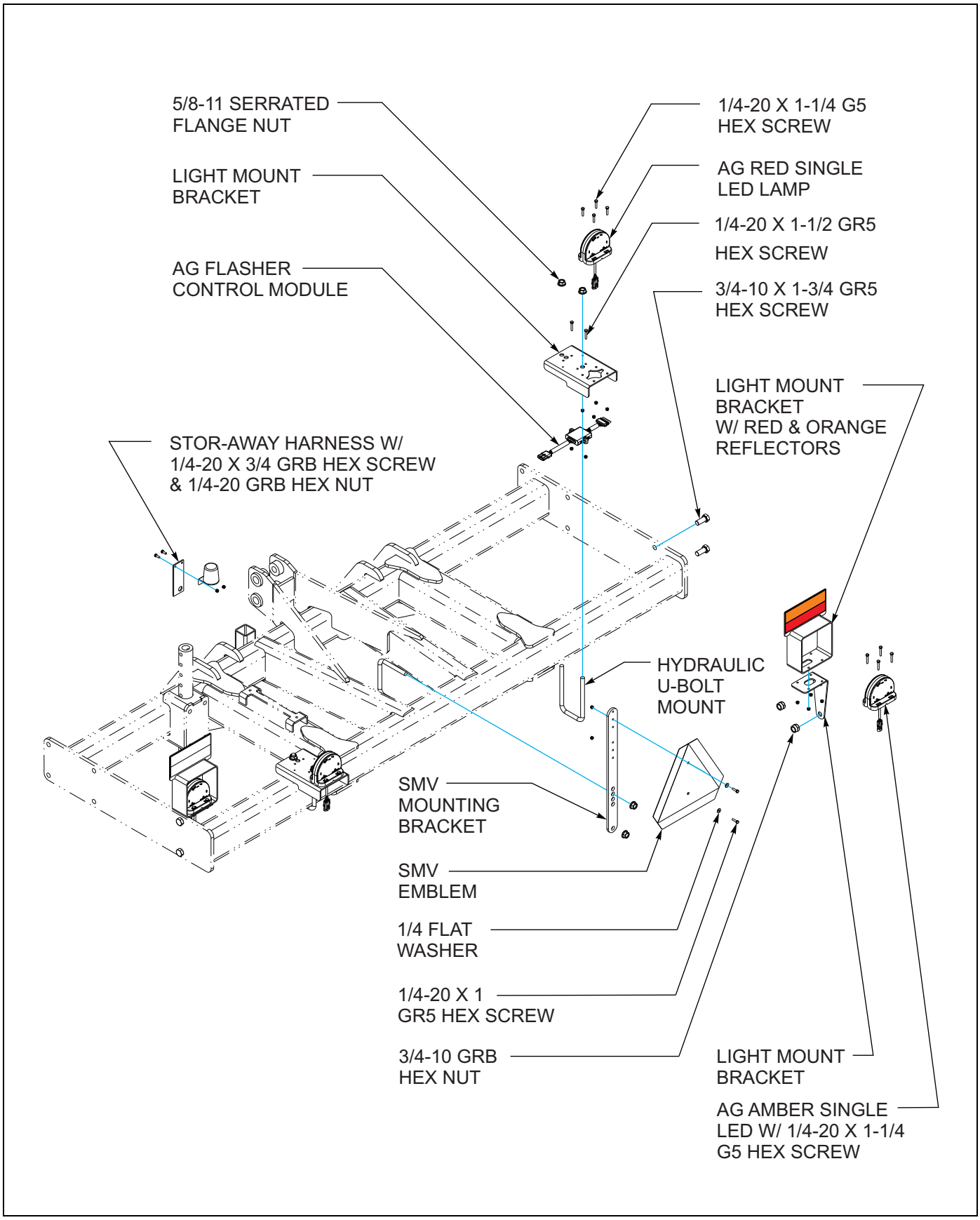

Figure 3-11: LED Light and SMV Bracket Installation - 3, 4, & 5 Standard Frame

https://truckmanualshub.com/

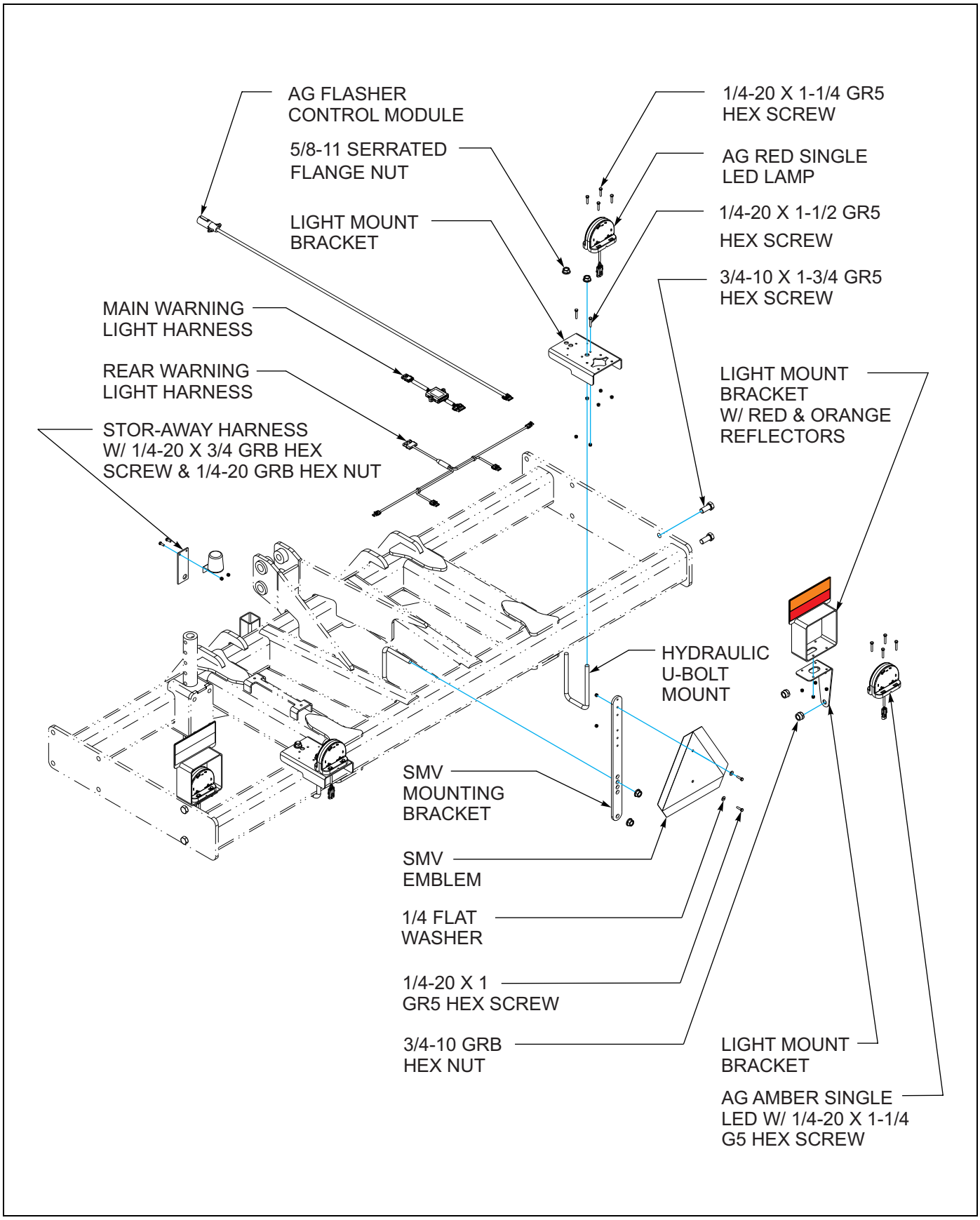

Figure 3-12: LED Light and SMV Bracket Installation - 4 & 5 Narrow Frame

https://truckmanualshub.com/

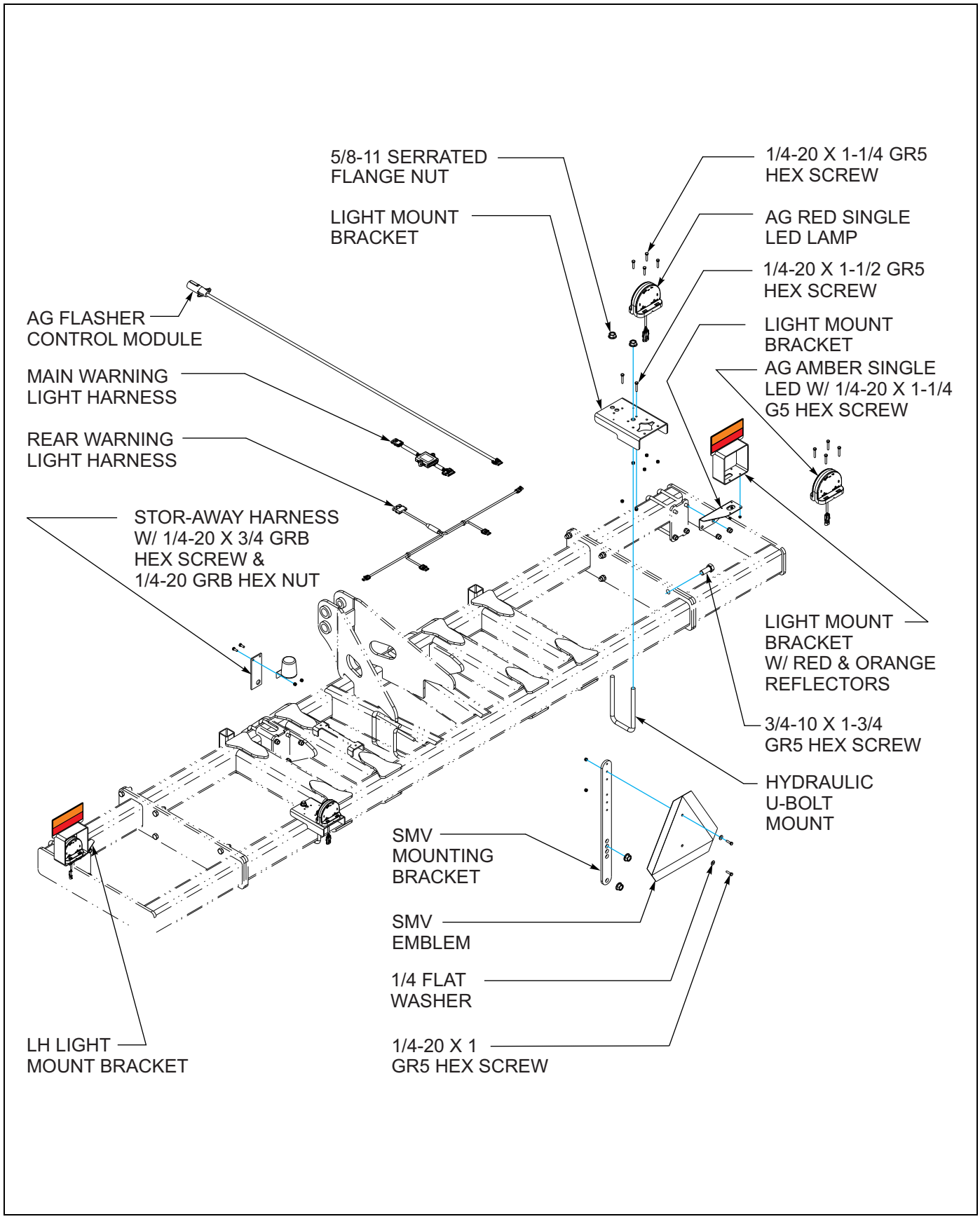

Figure 3-13: LED Light and SMV Bracket Installation - 6 & 7 Narrow Frame

https://truckmanualshub.com/

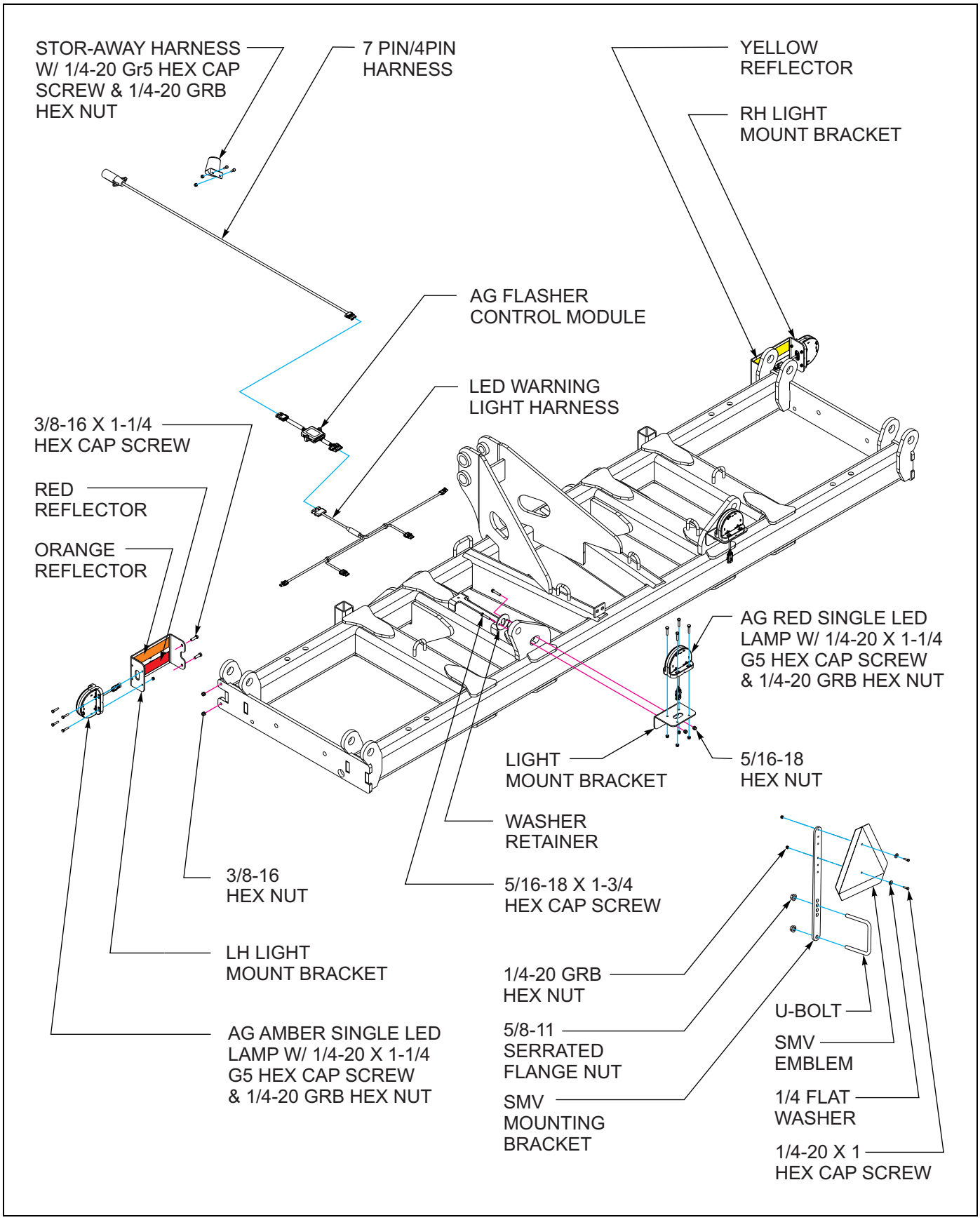

Figure 3-14: LED Light and SMV Bracket Installation - 7, 8, & 9 Folding Frame

https://truckmanualshub.com/

7-PIN CONN.	4-PIN TOWER	CIRCUIT	WIRE COLOR
1	D	GROUND	GROUND
2	–	WORK LAMPS	BLACK
3	B	LEFT FLASHING & TURN	YELLOW
4	–	STOP LAMPS	RED
5	A	RIGHT FLASHING & TURN	GREEN
6	C	TAIL LAMPS	BROWN
7	–	SWITCHED POWER (12 V)	BLUE

LED WARNING LIGHT HARNESS - WIRING CHART

	1	2	3	4	5
	2-PIN TOWER	3-PIN TOWER	6-PIN SHROUD	3-PIN TOWER	2-PIN TOWER
BLACK LEFT TURN			A	C	
WHITE GROUND	A	A	B	A	A
BROWN TAIL LIGHT		B	C	B	
YELLOW LEFT TURN			D		B
GREEN RIGHT TURN	B		E		
RED RIGHT TURN		C	F		

7 PIN/4PIN LIGHT HARNESS - WIRING CHART

Figure 3-15: LED Light and SMV Harness Wire Designations

https://truckmanualshub.com/

Hydraulic Fold Installation

1. Pin cylinder rod to wing bracket using clevis pin.
2. Install 90° elbow with restrictor into each port of hydraulic cylinders **(See Figure 3-16.)**
3. Install Hose 1 from hydraulic manifold to the base end of the left hydraulic cylinder.
4. Install Hose 2 from hydraulic manifold to the rod end of the left hydraulic cylinder.
5. Install Hose 3 from hydraulic manifold to the rod end of the right hydraulic cylinder.
6. Install Hose 4 from hydraulic manifold to the base end of the right hydraulic cylinder.
7. Install coupling Hoses 5 & 6 from the front of the hydraulic manifold to the 1/2 male couplers. Connect the coupler fittings to the tractor.

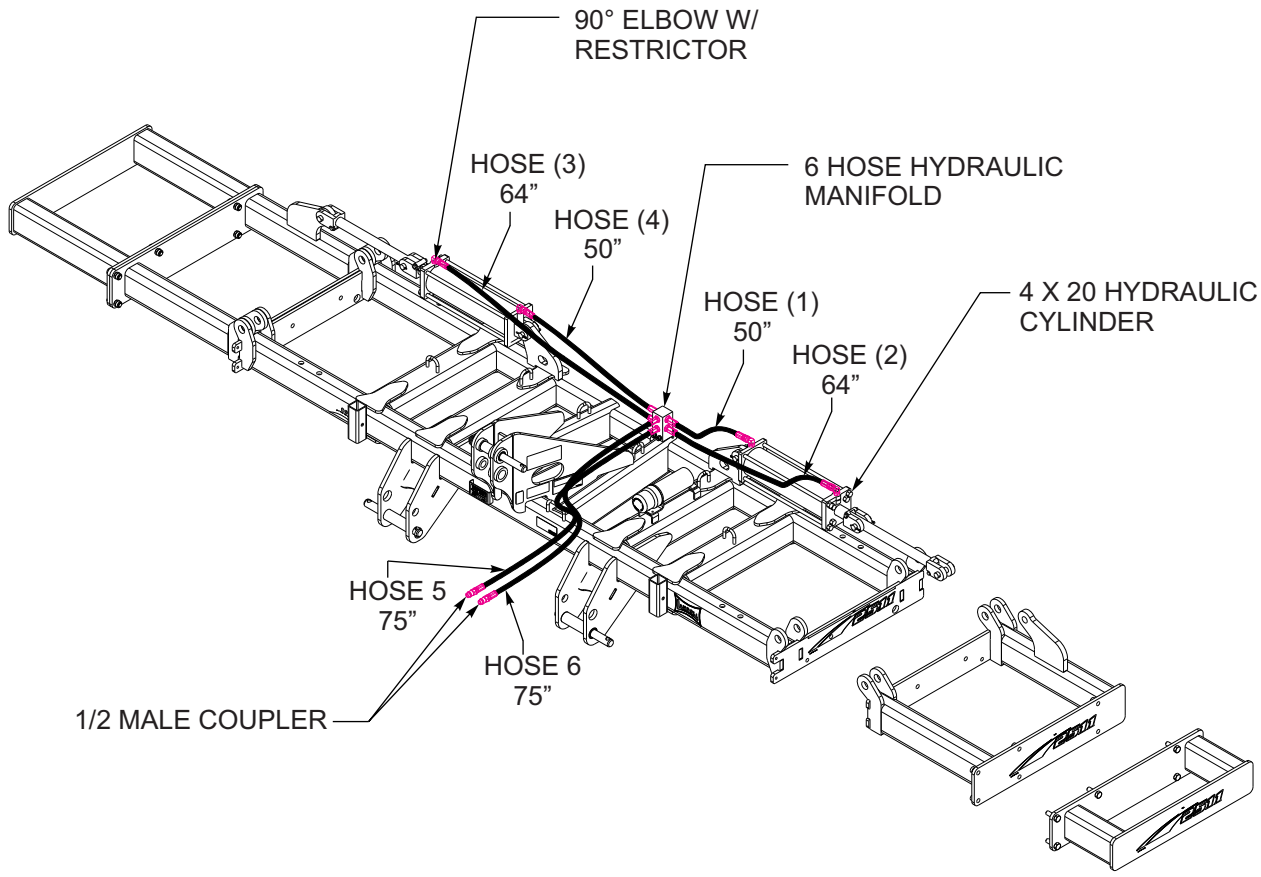

Figure 3-16: Hydraulic Fold Installation

https://truckmanualshub.com/

Chapter 4

Operation and Maintenance

DANGER

Coulter blades are sharp. Do not allow coulters to roll over or fall on any part of the body. Do not allow wrenches to slip when working near coulter blades. Do not climb over machine above coulter blades. Failure to stay clear of coulter blade edges may result in serious personal injury or death.

DANGER

Never allow anyone to ride on the Zone Commander at any time. Allowing a person to ride on the Zone Commander may result in serious personal injury or death of that person.

WARNING

All hydraulically elevated equipment must be locked out or lowered to the ground when servicing or when equipment is idle, to prevent accidental lowering. Failure to take measures to prevent accidental lowering may result in serious personal injury.

CAUTION

Whenever transporting farm implements on public roads, it is the responsibility of the operator to abide by state and local laws concerning wide loads, speed, safety emblems, and safety lighting equipment. Drive at safe speeds, particularly when rounding corners, crossing rough ground, on hillsides, to prevent tipping.

https://truckmanualshub.com/

Tractor Preparation

The Zone Commander may be used on tractors equipped with category II or III three-point hitches. Before attaching the Zone Commander, prepare the tractor as follows:

a. The rear tractor tires should be inflated equally and ballast added according to the tractor operator's manual.

b. For mounted type models, install front end weights as needed on tractor to maintain stability.

Zone Commander Operation

1. Before operating the Zone Commander, inspect it to be sure it is in good operating condition.
2. Replace badly worn or missing parts.
3. While the machine is new, bolt tightness should be checked after a few hours of operation. Tighten any loose nuts or cap screws. Check the gauge wheel lug bolts daily.
4. Check the gauge wheel tire inflation. All tires should be equally inflated to avoid side draft.

Attaching to Three-Point Hitch

1. Carefully back the tractor into place.
2. Attach the Zone Commander to the tractor.
3. For tractors equipped with Quick Hitches:
   a. Attach quick hitch to the Zone Commander
   b. Raise and make sure lower pin locks are secured.
   c. Raise the parking stand and pin in fully up position.
   d. When disconnecting the Zone Commander, adjust stands to leave the toolbar tilted slightly forward. This will permit easier disconnecting and reattaching.
4. For tractors not equipped with Quick Hitch:
   a. Attach lower lift arms of the tractor to the Zone Commander utilizing appropriate pins. Zone Commander models come with either Category II & III WIDE or Category IV NARROW hitches. **(See Figure 4-1.)**
   b. Attach top link after connecting lower lift arms. Raise parking stands into clamps or remove. When disconnecting, place stand so that the Zone Commander is stable.
5. Reinstall the stabilizer bars or sway blocks before transporting

CAUTION

Do not move tractor without making sure top hitch is connected to tractor.

https://truckmanualshub.com/

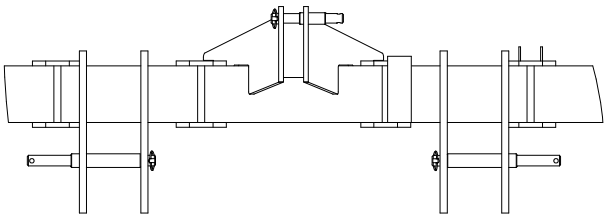

CAT II HITCH

USED WITH 3, 4, & 5 NARROW FRAMES

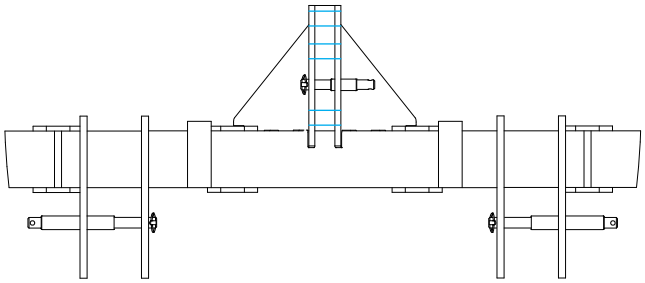

CAT III NARROW HITCH

USED WITH 7, 8, & 9 FOLDING FRAMES
&
4, 5, 6, & 7 STANDARD FRAMES

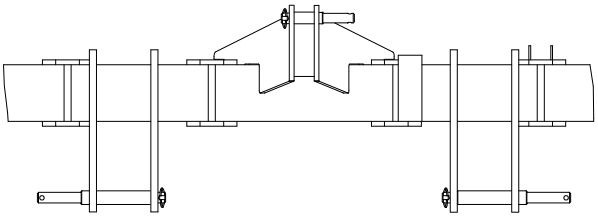

CAT III HITCH

USED WITH 3, 4, & 5 NARROW FRAMES

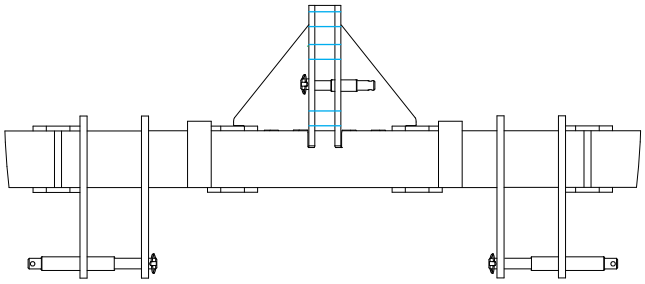

CAT III HITCH

USED WITH 7, 8, & 9 FOLDING FRAMES
&
4, 5, 6, & 7 STANDARD FRAMES

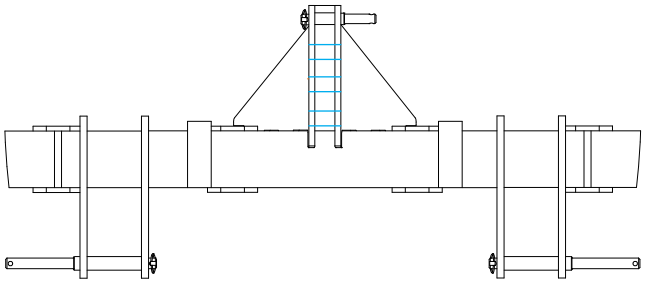

CAT IV NARROW HITCH

USED WITH 7, 8, & 9 FOLDING FRAMES
&
4, 5, 6, & 7 STANDARD FRAMES

Figure 4-1: 3 Point Hitch Setup

https://truckmanualshub.com/

Field Operation - Three Point Hitch Type

1. Lower the Zone Commander to the ground and pull it a few feet at the approximate desired depth.
2. Check for front-to-rear levelness. Level the frame by adjusting the three-point hitch top arm until the frame is level to the ground.
3. Set the depth by adjusting the gauge wheels. For stability, it is important that the gauge wheels always apply slight pressure against the soil. Adjust the gauge wheels as follows:.
   a. Remove 1/4 hairpin and 1 x 6 pin.
   b. Crank jack up or down to desired depth.
   c. Line up holes in spindle and clamp weldments. Replace pin and hair pins into gauge wheel assembly.
4. Always lift the Zone Commander completely out of the ground before turning or backing to prevent shank or coulter damage or damage to their respective mounting brackets.
5. Reduce speed at field ends, raise the Zone Commander out of the ground, and assist turning by using the wheel brakes, if necessary.
6. After a few hours of initial operation, check all cap screws for tightness. Tighten any loose cap screws.
7. Coulters should be adjusted to operate only deep enough to be in firm soil and cut the residue. Generally, the harder the soil, the less pressure should be used on the coulters. Adjust the single coulters by loosening the coulter mount U-bolts, sliding the coulter up or down as needed and retightening.

Wheel Bearing Maintenance

1. Check wheel bearings and coulter bearings occasionally for excessive end play. To correctly replace the wheel bearings:
2. Place the frame on blocks or stands sufficient to lift the tire clear of the ground.
3. Remove the hub cap, cotter pin, slotted nut, and washer.
4. Remove the hub. Clean and inspect the bearings and hub cavity. Replace any worn or defective parts.
5. Repack the bearings using a high-quality wheel bearing grease.
6. Replace the hub with a new seal and inner bearing in place.
7. Install the outer bearing cone, washer, and slotted nut.
8. Tighten the slotted nut while rotating the hub until there is a slight resistance to wheel rotation. Back the slotted nut off one notch until the wheel rotates freely without end play.
9. Install a new cotter pin and the hub cap.
10. Wheel bearing maintenance should be performed at the beginning of every season of use.

Coulter Spring Adjustment

No spring adjustment is necessary on the coulters. All adjustments were made before shipping at the factory. Initial operating force to move coulter upwards is 540 pounds. The preload has proved to be more than adequate for most conditions.

CAUTION

Any attempt to make coulter force greater than factory setting may contribute to premature failure of parts and warranty shall be null and void.

Lubrication

IMPORTANT

Items with grease zerks are listed in the illustrated parts book.

1. Grease coulter hub and swivel mount casting after twenty hours of use.

Storage

1. The service life of the Zone Commander will be extended by proper off-season storage practices. Before storing, complete the following procedures:
2. Completely clean the unit.
3. Inspect the machine for worn or defective parts. Replace parts as needed to avoid delays the following season.
4. Repaint all areas where the original paint film is worn off.
5. Grease all exposed metal surfaces of shanks, points, and coulters.
6. Lubricate as suggested in **“Lubrication” on page 4-4.**
7. Store the unit in a shed or under a tarpaulin to protect it from the weather. The ground tools and tires should rest on a board or other device to keep them out of the soil.

https://truckmanualshub.com/

Chapter 5

Troubleshooting Guide

The Troubleshooting Guide, shown below, is included to help you quickly locate problems that can happen using your 2511 Series Zone Commander. Follow all safety precautions stated in the previous sections when making any adjustments to your machine.

PROBLEM	PROBABLE CAUSE	SOLUTION
SPIKES DO NOT PENETRATE TO DESIRED DEPTH	Coulters set too deep	Adjust coulters up, to just run in firm soil, to cut residue.
	Spikes worn back	Replaces spikes
	Lower hitch arms in lower holes of pull bracket	Move hitch arms to upper hole in pull brackets.
	Implement not level	Adjust top 3-point link.
UNIT BOUNCES OR NOT WORKING AT UNIFORM DEPTH	Gauge wheels not set at correct depth	Adjust gauge wheels to correct depth. Gauge wheels, not the 3-point hitch, should carry the load.
	Gauge wheels not set at correct depth	Adjust all gauge wheels to same depth.
	Tire pressure not equal	Inflate all tires to the same pressure.
	Lower hitch arms not set to same height	Measure lower hitch arms and adjust to uniform length.
RESIDUE HANGS ON SHANKS	Coulter not set deep enough	Adjust coulter down to run in firm soil, to cut residue.
	Gauge wheel too close to shank	Position gauge wheel on frame for maximum clearance to shanks.
	Coulter not aligned	Check coulter alignment on front bar.
	Soil too wet causing hairpinning of residue	Let soil dry.

https://truckmanualshub.com/

https://truckmanualshub.com/

Document Control Revision Log:

Date	Revision	Improvement(s) Description and Comments	Team Member
04/2015	R0	Initial Release	WML

https://truckmanualshub.com/

Equipment from Landoll Corporation is built to exacting standards ensured by ISO 9001 registration at all Landoll manufacturing facilities.

Zone Commander
Model 2511
Operator's Manual

Re-Order Part Number F-758R0

LANDOLL CORPORATION
1900 North Street
Marysville, Kansas 66508
(785) 562-5381
800-428-5655 ~ WWW.LANDOLL.COM

Copyright 2014. Landoll Corporation
"All rights reserved, including the right to reproduce this material or portions thereof in any form."