https://truckmanualshub.com/

Operating Instructions
Parts List

SPN10

Semi-Electric Stacker

Note:Owner and Operator MUST read and understand this operating instructions before use this stacker.

Welcome to use our half-electric stacker SPN series. Your stacker is made of high quality steel and SPED mast and was designed to give a durable, reliable and easy to use product. For your safety and correct operation, please carefully read this instruction book and warnings on the stacker before using it.

NOTE: All of the information reported herein is based on data available at the moment of printing. We reserves the right to modify our own products at any moment without notice and incurring in any sanction. So, it is suggested to always verify possible updates.

1. STRUCTURAL DATA FORM

Model		SPN10
Capacity	Kg	1000
Lift Height	mm	1600/2500/3000/3500
Fork Size	mm	900x150x60 or 1100x160x60
Overall Height	mm	2077/1827/2077/2327
Lift Speed with/without Load	mm/sec	80/130
Lower Speed with/without Load	mm/sec	0~420/0~190
Min. Fork Height	mm	85
Battery		DC12V, 120AH
Motor of Hydraulic Pump		DC12V, 1.5KW

2. SAFETY GUIDANCE

2.1 Operator should read all warning signs and instructions here and on the stacker before using it.
2.2 Do not operate a stacker unless you are familiar with it and have been trained or authorized to do so.
2.3 Do not operate a stacker unless you have checked its condition. Give special attention to the chain, the wheels, the handle, the guide frame, the pilot wheel, the mast, battery, etc.
2.4 Do not use on a slopping ground or on a barbaric or explosive danger environment.
2.5 Do not take up any people on the forks.
2.6 When forks lifting, forbid anyone to stand under the forks or pass through the forks.
2.7 The operator had better take on gloves for labor protecting.
2.8 Do not move the stacker when the goods are lifted to the height more than 300mm.
2.9 When the goods have been transported or lifted, all people should be away from the forks for 600mm.
2.10 The weight of goods should be distributed on the two forks, do not use only one fork. The center of gravity of goods should be in the center of two forks.
2.11 Do not load over maximum capacity.
2.12 Before using or charging it, check cell liquid, if not enough, full it with distilled

water.

2.13 Charging should be in dry and ventilated location, and far away from the fire.

2.14 Keeping the forks in the lowest position if not using.

2.15 At other special condition or place, the operator should be carefully to operate the stacker.

3. MAINTENANCE

3.1 Hydraulic oil

Please check the oil level every six months. The oil can be hydraulic oil: **ISO VG32**, its viscosity should be 32cSt at 40°C, total volume is about 4.0lt.

3.2 Daily check and maintenance

It is necessary to check the stacker daily. Special attention should be paid to the wheels, the axles, as thread, rags, etc., it may block the wheels, the fork and the mast, the chain, the battery should be checked, too. The forks should be unloaded and lowered in the lowest position when the job is over.

3.3 Lubrication

Use motor oil or grease to lubricate all movable parts.

4. HOW TO CHARGE STORAGE BATTERY

4.1 Charge storage battery when its voltage is less than 10 Volt.

4.2 Please check the battery liquid before charging, if it is not enough, add some distilled water.

4.3 The charging environment should be ventilated and far away from the fire.

4.4 If the stacker not use for long time, charge it for not less than two hours every week.

4.5 The voltage on the indicator should not be over 15 Volt when charging.

4.6 Do not use the stacker when charging.

5. CONTROL PANEL

Fig. 1

5.1 Urgent switch

When you press down this switch, it will switch off the power, and then you turn it clockwise, it will switch on the power.

5.2 Voltage meter

It indicates the voltage of battery. When its voltage is less than 10 Volt, you should not use this stacker, you must charge it.

5.3 Control stick

This stick controls the forks to lower or lift.

5.4 Charger socket

6. TROUBLES SHOOTING

No	Trouble	Clause	Fixing Methods
1	The forks can not be up the max. height.	-The hydraulic oil is not enough.	-Pour in the oil.
2	The forks can not be lifted up.(Motor is rotary)	-Without hydraulic oil. -The oil has impurities.	-Fill in the oil. -Change the oil.
3	The motor cannot run.	-The urgent switch is pressed down, cut off the power. -The voltage is too lower. -The connectors of electrical wire is loose. -The contactor of DC motor is bad.	-Turn it clockwise, switch on the power -Charge it. -Turn it firm. -Replace with new one.
4	The forks cannot be descended.	-The piston rod or mast is deformed resulting from partial loading slanting to one side or over-loading. -The fork was kept in the high position for long time with piston rod bared to arise in rusting and jamming of the rod. -The release valve of pump is not opened.	- Replace with new one. -Keeping the fork in the lowest position if not using, and pay more attention to lubricate the rod. -Check it, if damaged, replace with new one.
5	Leaks	-Sealing parts worn or damaged. -Some part cracked or worn into small.	-Replace with the new one. -Replace with the new one.
6	The fork descends without the release valve worked.	-The impurities in the oil cause the release valve to be unable to close tight. -Sealing parts worn or damaged. -The release valve is damaged.	-Replace with new oil. -Replace with the new one. -Replace with the new one.
7	Battery cannot be charged	-Battery is bad. -The charging plug is loose.	- Replace with the new one. - Turn it firm.

NOTE: DO NOT ATTEMP TO REPAIR THE STACKER UNLESS YOU ARE TRAINED AND AUTHORIZED TO DO SO.

7. Parts List

7.1 SPN1025/SPN1525 、SPN1030/SPN1530andSPN1035/SPN1535 part list

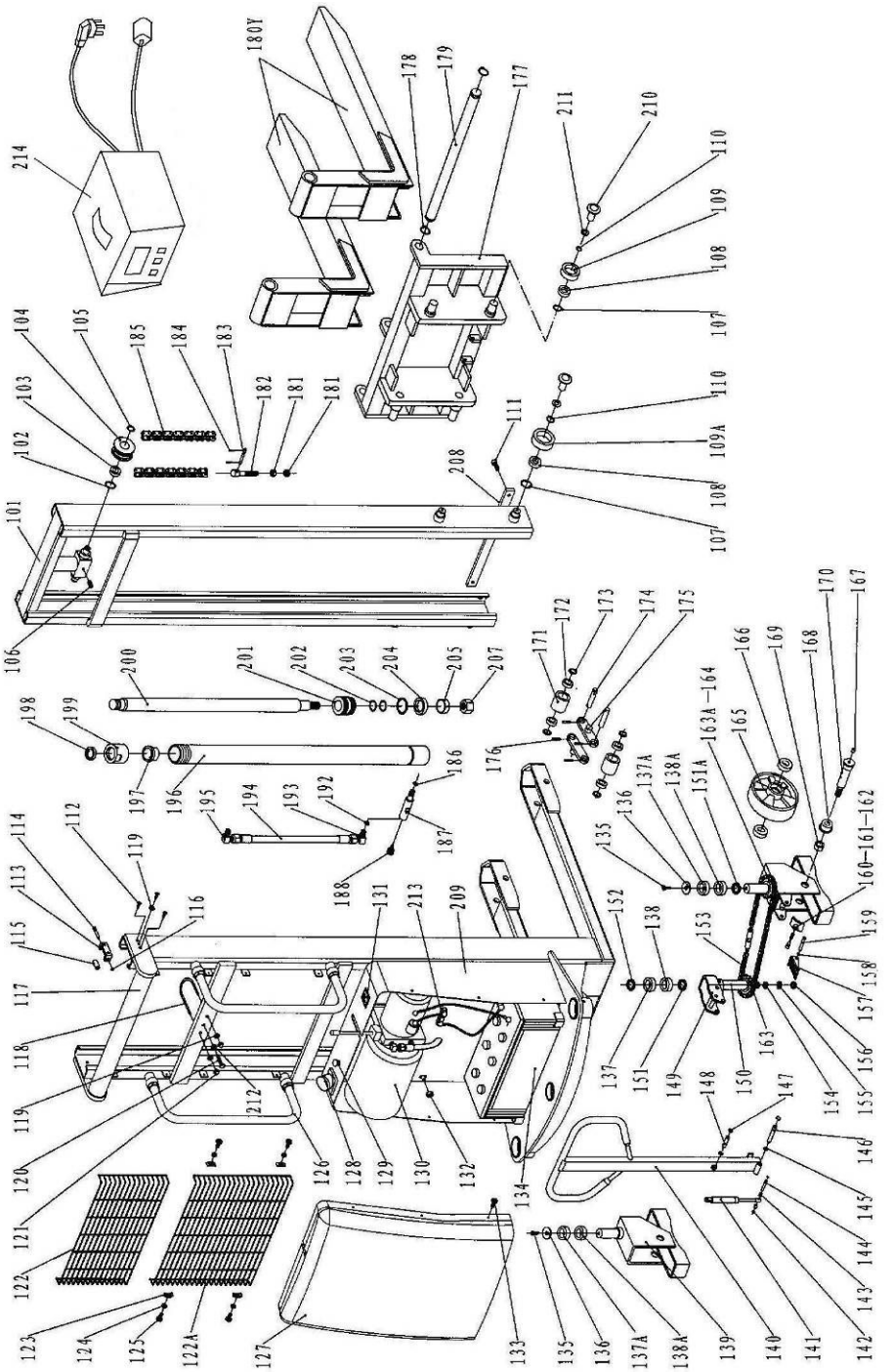

SPN1025/SPN1525 、 SPN1030/SPN1530andSPN1035/SPN1535 part list

No.	Code	Description	Qty.	No.	Code	Description	Qty.
101	D13570012	Inner Mast (2.5)	1	155	503020012	Washer	1
	D13570018	Inner Mast (3.0)	1	156	502040020	Nut	1
102	504040022	Locking Ring	2	157	D01640004	Foot Plate	1
103	349010201	Bearing	2	158	504030004	Locking Ring	1
104	422260011	Roller For Chain	2	159	301726012	Shaft	1
105	504030013	Locking Ring	2	160	D01640003	Brake	1
106	5010808010C0	Screw	1	161	302010116	Spring	1
107	504040025	Locking Ring	8	162	422680028	Bolt	1
108	349010119	Bearing	8	163A	349030011	Sprocket Wheel	1
109	422670037	Roller (φ88x36)	4	163	422680046	Sprocket Wheel	1
109A	422670035	Roller (φ106x36)	4	164	422670019	Seat of Turning Wheel	1
110	504030018	Locking Ring	8	165	30301WH054	Big Wheel	2
111	5010410020C0	Bolt	2	166	349010113	Bearing	4
112	5010408040C0	Bolt	6	167	506060017	Oil holder	2
113	422670020	Crutch of Idler Pulley	2	168	422680037	Washer	2
114	301726012	Shaft	2	169	502040012	Locking Nut	2
115	422680012	Idler Pulley	2	170	422660031A	Axle for wheel	2
116	504030004	Locking Ring	2	171	30301WH017	Loading Roller	4
117	D13570010	Mast (2.5)	1	172	349010113	Bearing	8
	D13570016	Mast (3.0)	1	173	503010036	Washer	8
118	301727017	Hoop	1	174	301810037	Shaft	4
119	502030005	Nut	4	175	333050001	Linking Plate	4
120	50101010040	Bolt	1	176	505020088	Elastic Pin	8
121	502990006	Nut	2	177	D13570011	Fork Carriage	1
122	422670027	Protecting Meshwork	1	178	504030021	Locking Ring	2
122A	422670028	Protecting Meshwork	1	179	D06520013	Long Axle	1
123	506030109	Press Washer	8	180Y	422670015	Fork	2
124	503010058	Elastic Washer	8	181	502030011	Nut	4
125	5010506016C0	Bolt	8	182	422680024	Bolt	2
126	350230001	Handle	2	183	505020031	Pin	4
127	422680014	Cover	1	184	505040010	Cotter pin	8
128	30909400006	Charging Plug	1	185	349030136	Chain (1025)	2
129	30906200006	Urgent Switch	1		349030131	Chain (1030)	2
130	30916400394	Pump Station	1	186	504070041	O-Ring	1
131	30905100004	Voltage Meter	1	187	351420015	Body of Adjusting Valve	1
132	502030005	Nut	4	188	G110203006	Safety Valve	1
133	5010506016C0	Bolt	6	192	503030008	Seal Washer	1
134	30901700002	Battery	1	193	422020186	Elbow Bend	1
135	5010610016C0	Bolt	2	194	30916400328	Vitta	1
136	422570030	Cap	2	195	422020187	Elbow Bend	1
137A	349010121	Bearing (6206)	2	196	G36020001	Earthen Pipe (2.5)	1
137	349010119	Bearing (6205)	1		G36020002	Earthen Pipe (3.0)	1

138A	622020032	Bearing (30206)	2	197	G07020003	Sleeve	1
138	349010145	Bearing (30205)	1	198	504080020	Dust Ring	1
139	422670019	Seat of Wheel	1	199	422680035	Cover	1
140	350230002	Draw-Bar for Turning	1	200	351420021	Piston Rod (2.5)	1
					351420023	Piston Rod (3.0)	1
141	302990030	Gas spring	1	201	351420016	Piston	1
142	504030003	Locking Ring	2	202	504070071	O-Ring	2
143	422670014	Washer	2	203	504070107	O-Ring	1
144	301726010	Shaft	1	204	504010041	Seal	1
145	504030004	Locking Ring	2	205	422680039	Supporting Loop	1
146	301726014	Shaft	1	207	502040024	Nut	1
147	504030003	Locking Ring	2	208	D06520012	Traverse	1
148	301726009	Shaft	1	209	422680026	Box	1
149	D01630001	Seat of Draw-Bar	1	210	301799039	Washer	8
150				211	422040575	Washer	8
151	G36040002	Washer	1	212	502030005	Nut	1
151A	G36040004	Washer	1	213	30911100010	Fuse	1
152	503010054	Washer	2	214	30910100034	Charger	1
153	349030033	Chain	1				
154	503010068	Washer	1				

7.2 SPN1025G/SPN1525G、 SPN1030G /SPN1530 andSPN1035G/SPN1535 part list

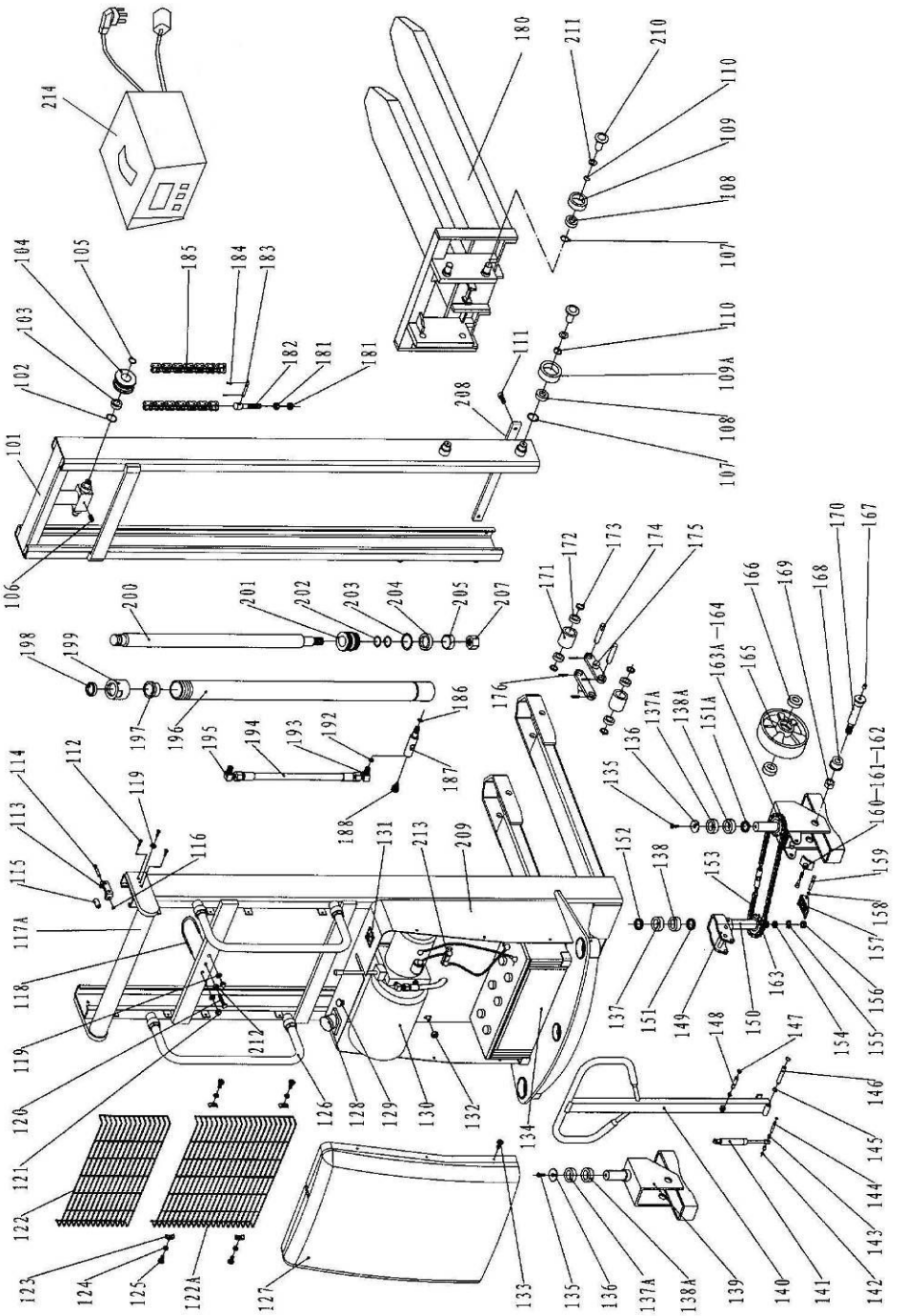

SPN1025G/SPN1525G 、 SPN1030G /SPN1530G andSPN1035/SPN1535part list

No.	Code	Description	Qty.	No.	Code	Description	Qty.
101	D13570012	Inner Mast (2.5)	1	153	349030033	Chain	1
	D13570018	Inner Mast (3.0)	1	154	503010068	Washer	1
102	504040022	Locking Ring	2	155	503020012	Washer	1
103	349010201	Bearing	2	156	502040020	Nut	1
104	422260011	Roller For Chain	2	157	D01640004	Foot Plate	1
105	504030013	Locking Ring	2	158	504030004	Locking Ring	1
106	5010808010C0	Screw	1	159	301726012	Shaft	1
107	504040025	Locking Ring	8	160	D01640003	Brake	1
108	349010119	Bearing	8	161	302010116	Spring	1
109	422670037	Roller (ϕ 88x36)	4	162	422680028	Bolt	1
109A	422670035	Roller (ϕ 106x36)	4	163A	349030011	Sprocket Wheel	1
110	504030018	Locking Ring	8	163	422680046	Sprocket Wheel	1
111	5010410020C0	Bolt	2	164	422670019	Seat of Turning Wheel	1
112	5010408040C0	Bolt	6	165	30301WH054	Big Wheel	2
113	422670020	Crutch of Idler Pulley	2	166	349010113	Bearing	4
114	301726012	Shaft	2	167	506060017	Oil holder (ϕ8)	2
115	422680012	Idler Pulley	2	168	422680037	Washer	2
116	504030004	Locking Ring	2	169	502040012	Locking Nut	2
117A	D13570007	Mast (2.5)	1	170	422660031A	Axle for wheel	2
	D13570013	Mast (3.0)	1	171	30301WH017	Loading Roller	4
118	301727017	Hoop	1	172	349010113	Bearing	8
119	502030005	Nut	4	173	503010036	Washer	8
120	50101010040	Bolt	1	174	301810037	Shaft	4
121	502990006	Nut	2	175	333050001	Linking Plate	4
122	422670027	Protecting Meshwork	1	176	505020088	Elastic Pin	8
122A	422670028	Protecting Meshwork	1	180	422670015	Mobile Forks group	1
123	506030109	Press Washer	8	181	502030011	Nut	4
124	503010058	Elastic Washer	8	182	422680024	Bolt	2
125	5010506016C0	Bolt	8	183	505020031	Pin	4
126	350230001	Handle	2	184	505040010	Cotter pin	8
127	422680014	Cover	1	185	349030136	Chain (1025)	2
128	30909400006	Charging Plug	1		349030131	Chain (1030)	2
129	30906200006	Urgent Switch	1	186	504070041	O-Ring	1
130	30916400394	Pump Station	1	187	351420015	Body of Adjusting Valve	1
131	30905100004	Voltage Meter	1	188	G110203006	Safety Valve	1
132	502030005	Bolt	4	192	503030008	Seal Washer	1
133	5010506016C0	Bolt	6	193	422020186	Elbow Bend	1
134	30901700002	Battery	1	194	30916400328	Vitta	1
135	5010610016C0	Bolt	2	195	422020187	Elbow Bend	1
136	422570030	Cap	2	196	G36020001	Earthen Pipe (2.5)	1
137A	349010121	Bearing (6206)	2		G36020002	Earthen Pipe (3.0)	1

137	349010119	Bearing (6205)	1	197	G07020003	Sleeve	1
138A	622020032	Bearing (30206)	2	198	504080020	Dust Ring	1
138	349010145	Bearing (30205)	1	199	422680035	Cover	1
139	422670019	Seat of Wheel	1	200	351420021	Piston Rod (2.5)	1
140	350230002	Draw-Bar for Turning	1		351420023	Piston Rod (3.0)	1
141	302990030	Gas spring	1	201	351420016	Piston	1
142	504030003	Locking Ring	2	202	504070071	O-Ring	2
143	422670014	Washer	2	203	504070107	O-Ring	1
144	301726010	Shaft	1	204	504010041	Seal	1
145	504030004	Locking Ring	2	205	422680039	Supporting Loop	1
146	301726014	Shaft	1	207	502040024	Nut	1
147	504030003	Locking Ring	2	208	D06520012	Traverse	1
148	301726009	Shaft	1	209	422680026	Box	1
149	D01630001	Seat of Draw-Bar	1	210	301799039	Washer	8
150			1	211	422040575	Washer	8
151	G36040002	Washer	1	212	502030005	Nut	1
151A	G36040004	Washer	1	213	30911100010	Fuse	1
152	503010054	Washer	2	214	30910100034	Charger	1

7.3 SPN1016 part list

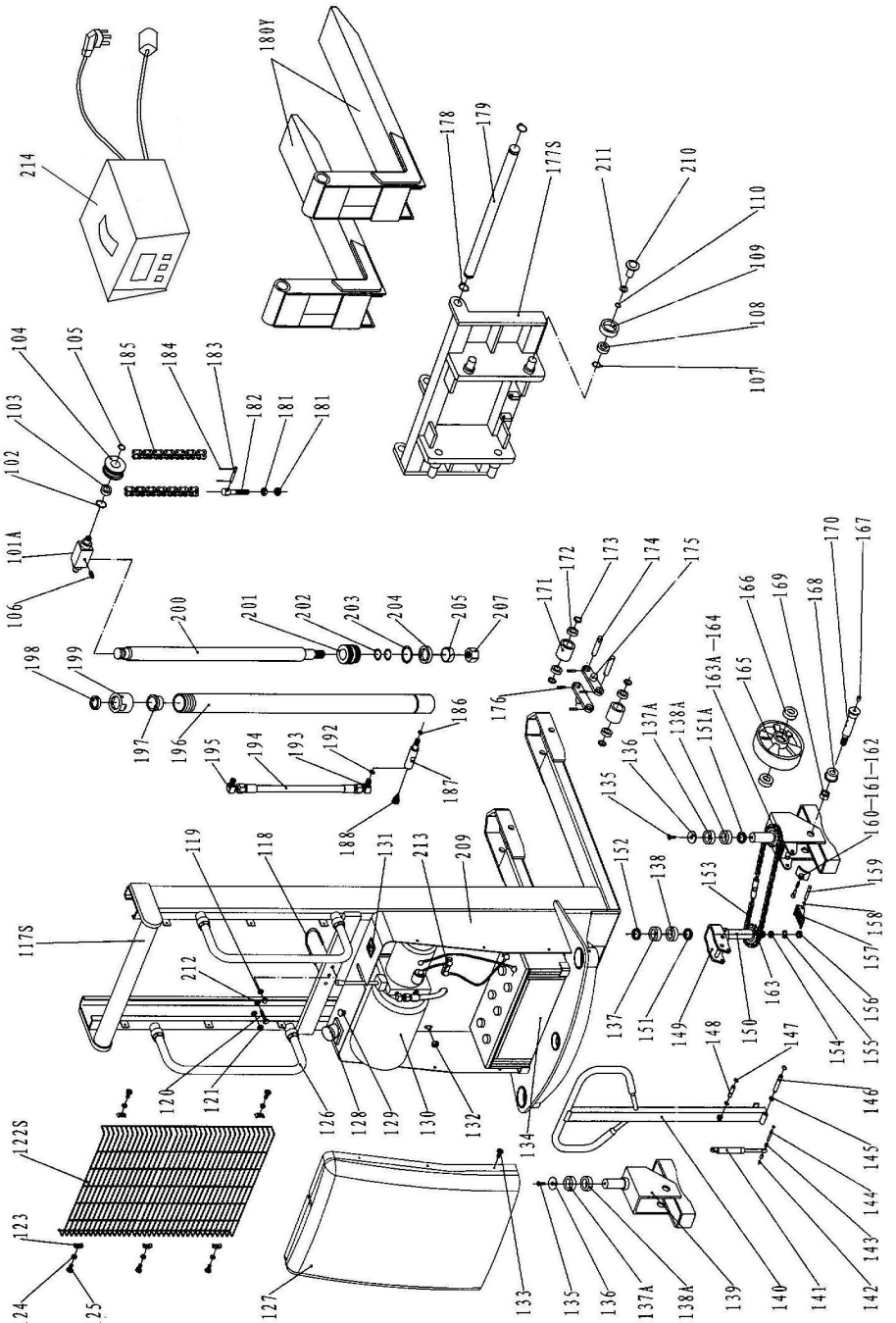

SPN1016 part list

No.	Code	Description	Qty.	No.	Code	Description	Qty.
101A	422670008	Holding plate	1	160	D01640003	Brake	1
102	504040022	Locking Ring	2	161	302010116	Spring	1
103	349010201	Bearing	2	162	422680028	Bolt	1
104	422260011	Roller For Chain	2	163A	349030011	Sprocket Wheel	1
105	504030013	Locking Ring	2	163	422680046	Sprocket Wheel	1
106	5010808010C0	Screw	1	164	422670019	Seat of Turning Wheel	1
107	504040025	Locking Ring	4	165	30301WH054	Big Wheel	2
108	349010119	Bearing	4	166	349010113	Bearing	4
109	422670037	Roller (ϕ 88x36)	4	167	506060017	Oil holder	2
110	504030018	Locking Ring	4	168	422680037	Washer	2
117S	D13570004	Mast (1.6)	1	169	502040012	Locking Nut	2
118	301727017	Hoop	1	170	422660031A	Axle for wheel	2
119	502030005	Nut	2	171	30301WH017	Loading Roller	4
120	50101010040	Bolt	1	172	349010113	Bearing	8
121	502990006	Nut	2	173	503010036	Washer	8
122S	422670027	Protecting Meshwork	1	174	301810037	Shaft	4
123	506030109	Press Washer	6	175	333050001	Linking Plate	4
124	503010058	Elastic Washer	6	176	505020088	Elastic Pin	8
125	5010506016C0	Bolt	6	177S	D13550004	Fork Carriage	1
126	350230001	Handle	2	178	504030021	Locking Ring	2
127	422680014	Cover	1	179	D06520013	Long Axle	1
128	30909400006	Charging Plug	1	180Y	422670015	Fork	2
129	30906200006	Urgent Switch	1	181	502030011	Nut	4
130	30916400394	Pump Station	1	182	422680024	Bolt	2
131	30905100004	Voltage Meter	1	183	505020031	Pin	4
132	502030005	Bolt	4	184	505040010	Cotter pin	8
133	5010506016C0	Bolt	6	185	349030133	Chain	2
134	30901700002	Battery	1	186	504070041	O-Ring	1
135	5010610016C0	Bolt	2	187	351420015	Body of Adjusting Valve	1
136	422570030	Cap	2	188	G110203006	Safety Valve	1
137A	349010121	Bearing (6206)	2	192	503030008	Seal Washer	1
137	349010119	Bearing (6205)	1	193	422020186	Elbow Bend	1
138A	622020032	Bearing (30206)	2	194	30916400328	Vitta	1
138	349010145	Bearing (30205)	1	195	422020187	Elbow Bend	1
139	422670019	Seat of Wheel	1	196	G36020005	Earthen Pipe (1.6)	1
140	350230002	Draw-Bar for Turning	1	197	G07020003	Sleeve	1
141	302990030	Gas spring	1	198	504080020	Dust Ring	1
142	504030003	Locking Ring	2	199	422680035	Cover	1
143	422670014	Washer	2	200	351420022	Piston Rod (1.6)	1

144	301726010	Shaft	1	201	351420016	Piston	1
145	504030004	Locking Ring	2	202	504070071	O-Ring	2
146	301726014	Shaft	1	203	504070107	O-Ring	1
147	504030003	Locking Ring	2	204	504010041	Seal	1
148	301726009	Shaft	1	205	422680039	Supporting Loop	1
149	D01630001	Seat of Draw-Bar	1	207	502040024	Nut	1
150				209	422680026	Box	1
151	G36040002	Washer	1	210	301799039	Washer	8
151A	G36040004	Washer	1	211	422040575	Washer	8
152	503010054	Washer	2	212	502030005	Nut	1
153	349030033	Chain	1	213	30911100010	Fuse	1
154	503010068	Washer	1	214	30910100034	Charger	1
155	503020012	Washer	1				
156	502040020	Nut	1				
157	D01640004	Foot Plate	1				
158	504030004	Locking Ring	1				
159	301726012	Shaft	1				

7.4 SPN1016G part list

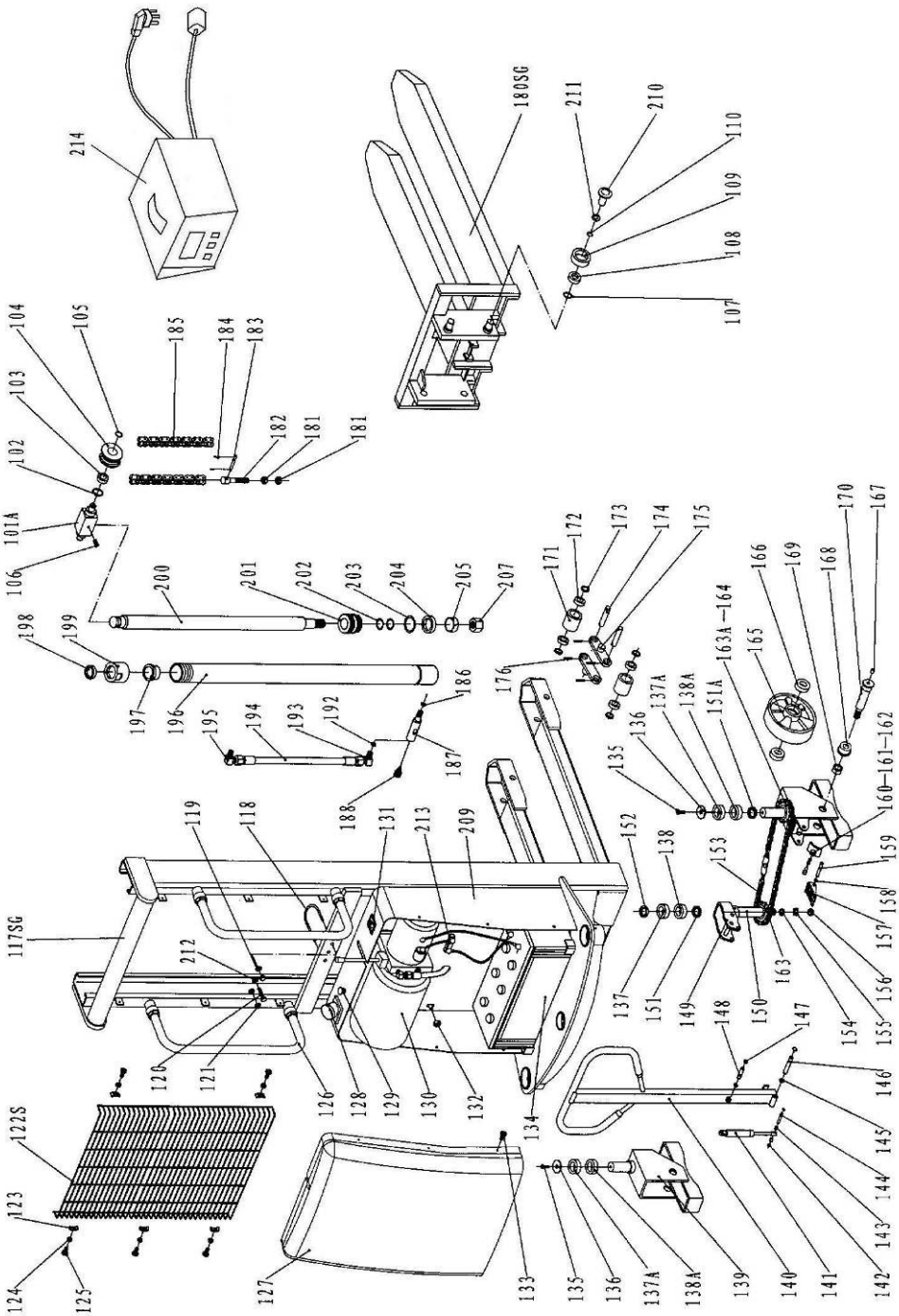

SPN1016G part list

No.	Code	Description	Qty.	No.	Code	Description	Qty.
101A	422670008	Holding plate	1	157	D01640004	Foot Plate	1
102	504040022	Locking Ring	2	158	504030004	Locking Ring	1
103	349010201	Bearing	2	159	301726012	Shaft	1
104	422260011	Roller For Chain	2	160	D01640003	Brake	1
105	504030013	Locking Ring	2	161	302010116	Spring	1
106	5010808010C0	Screw	1	162	422680028	Bolt	1
107	504040025	Locking Ring	4	163A	349030011	Sprocket Wheel	1
108	349010119	Bearing	4	163	422680046	Sprocket Wheel	1
109	422670037	Roller (ϕ 88x36)	4	164	422670019	Seat of Turning Wheel	1
110	504030018	Locking Ring	4	165	30301WH054	Big Wheel	2
117SG	D13570001	Mast (1.6)	1	166	349010113	Bearing	4
118	301727017	Hoop	1	167	506060017	Oil holder (ϕ8)	2
119	502030005	Nut	2	168	422680037	Washer	2
120	50101010040	Bolt	1	169	502040012	Locking Nut	2
121	502990006	Nut	2	170	422660031A	Axle for wheel	2
122S	422670027	Protecting Meshwork	1	171	30301WH017	Loading Roller	4
123	506030109	Press Washer	6	172	349010113	Bearing	8
124	503010058	Elastic Washer	6	173	503010036	Washer	8
125	5010506016C0	Bolt	6	174	301810037	Shaft	4
126	350230001	Handle	2	175	333050001	Linking Plate	4
127	422680014	Cover	1	176	505020088	Elastic Pin	8
128	30909400006	Charging Plug	1	180SG	422670015S	Mobile Forks group	1
129	30906200006	Urgent Switch	1	181	502030011	Nut	4
130	30916400394	Pump Station	1	182	422680024	Bolt	2
131	30905100004	Voltage Meter	1	183	505020031	Pin	4
132	502030005	Bolt	4	184	505040010	Cotter pin	8
133	5010506016C0	Bolt	6	185	349030133	Chain	2
134	30901700002	Battery	1	186	504070041	O-Ring	1
135	5010610016C0	Bolt	2	187	351420015	Body of Adjusting Valve	1
136	422570030	Cap	2	188	G110203006	Safety Valve	1
137A	349010121	Bearing (6206)	2	192	503030008	Seal Washer	1
137	349010119	Bearing (6205)	1	193	422020186	Elbow Bend	1
138A	622020032	Bearing (30206)	2	194	30916400328	Vitta	1
138	349010145	Bearing (30205)	1	195	422020187	Elbow Bend	1
139	422670019	Seat of Wheel	1	196	G36020005	Earthen Pipe (1.6)	1
140	350230002	Draw-Bar for Turning	1	197	G07020003	Sleeve	1
141	302990030	Gas spring	1	198	504080020	Dust Ring	1
142	504030003	Locking Ring	2	199	422680035	Cover	1
143	422670014	Washer	2	200	351420022	Piston Rod (1.6)	1

144	301726010	Shaft	1	201	351420016	Piston	1
145	504030004	Locking Ring	2	202	504070071	O-Ring	2
146	301726014	Shaft	1	203	504070107	O-Ring	1
147	504030003	Locking Ring	2	204	504010041	Seal	1
148	301726009	Shaft	1	205	422680039	Supporting Loop	1
149	D01630001	Seat of Draw-Bar	1	207	502040024	Nut	1
150			1	209	422680026	Box	1
151	G36040002	Washer	1	210	301799039	Washer	8
151A	G36040004	Washer	1	211	422040575	Washer	8
152	503010054	Washer	2	212	502030005	Nut	1
153	349030033	Chain	1	213	30911100010	Fuse	1
154	503010068	Washer	1	214	30910100034	Charger	1
155	503020012	Washer	1				
156	502040020	Nut	1				

version number：090720