https://truckmanualshub.com/

STILL WAGNER

Workshop Manual FM Type 447

To get the
Table of Assemblies
click here

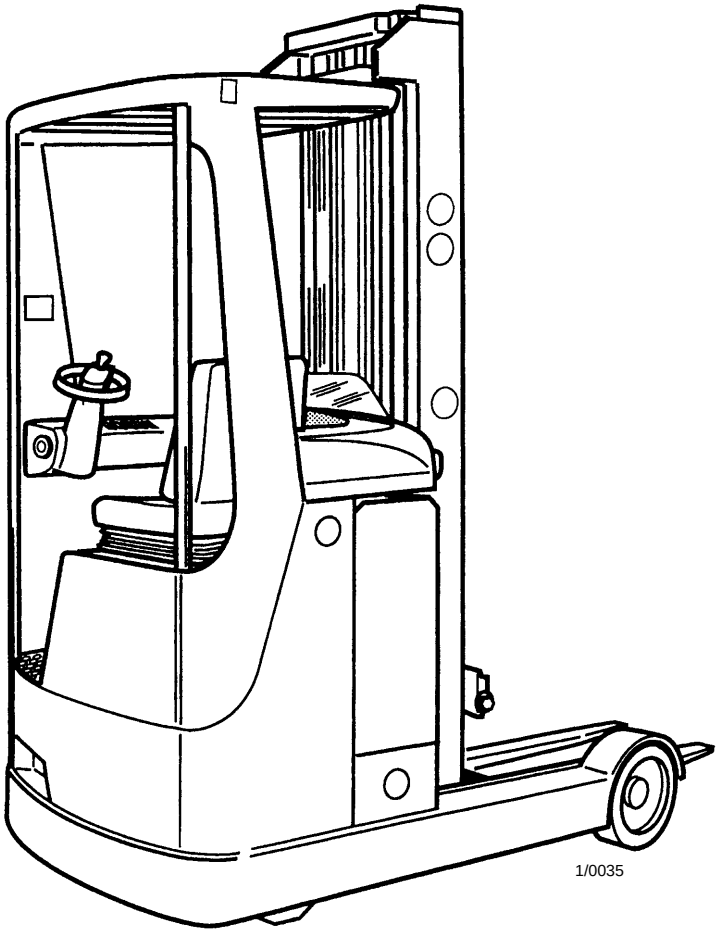

COPYRIGHT protected. No part of this manual may be reproduced in any form. Copyright reserved.

STILL WAGNER

First issued: 05/01 Last revision:	Workshop Manual	**FM Type 447**	Id. no. 8 054 226

https://truckmanualshub.com/

Foreword

This workshop manual provides specifications and describes functional characteristics of the standard truck.

This provides you with a comprehensive documentation to ensure better understanding of the vehicle technology and so permit correct maintenance and repair work to be carried out.

The workshop manual is always updated by supplementary sheets.

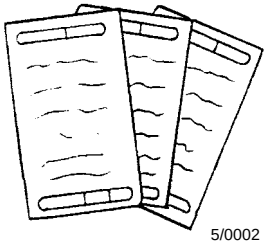

5/0002

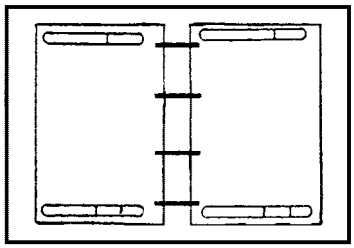

5/0003

Updating of workshop manuals

The industrial truck range is subject to continuous further development. This means that certain components or assemblies are exchanged or modified.

To ensure that the holder of this manual always has the most up to date version of the documentation, it is important to abide by the following updating system.

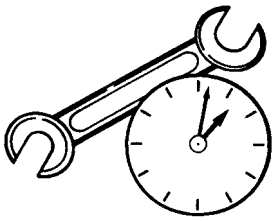

5/0004

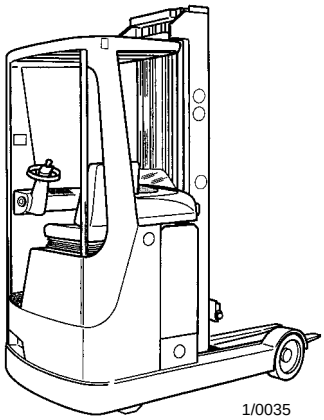

1/0035

Copyright protected. No part of this manual may be reproduced in any form. Copyright reserved.

https://truckmanualshub.com/

Updating workshop manuals
(Contd.)

1. Exchanging faulty sheets

If a particular page contains mistakes, for example due to altered setting values, the respective sheet must be exchanged.
A newly inserted sheet can be recognized by the altered left-hand baseline (1). Here, the date of compilation is updated in the line entitled **Issue** (2). In the line **Replaces issue** (3) is the compilation date of the sheet to be replaced. The sheet no. remains the same (4).
With every revision the **first sheet** will be replaced. In (9) you see the **first issue** and the date of the **last revision**. This tells you the revision state of the whole book.

Page baseline of the existing sheet

Issue: 05/01 Replaces issue:	Workshop Manual FM Type 447	sheet.no. A 1

1 4

2

Page baseline of the corrected sheet

Issue: 09/01 Replaces issue: 05/01	Workshop Manual FM Type 447	sheet-no. A 1

3

Page baseline of the first sheet

First issue: 05/01 Last revision:	Workshop Manual FM Type 447	Id. Nr. ...

9

2. Insertion of supplementary sheets

If new, modified or additional components are included in the series truck, it may be necessary to add one or more supplementary sheets.
The additional sheet is recognized by the left-hand and right-hand page baseline (5+6).
In the Issue line on the left-hand side is the compilation date (7). On the right, the supplementary sheet is marked by the sheet no. with continuous index (8).
In addition, the table of contents of the respective assembly must also be exchanged.

Newly compiled sheets, whether replacements or supplementary sheets, and the new tables of contents are sent by post to all known holders of workshop manuals.

Page baseline of the existing sheet

Issue: 05/01 Replaces issue:	Workshop Manual FM Type 447	sheet-no. A 1

5 6

Page baseline of the supplementary sheet

Issue: 09/01 Replaces issue:	Workshop Manual FM Type 447	sheet-no. A 1.1

7 8

Copyright protected. No part of this manual may be reproduced in any form. Copyright reserved.

https://truckmanualshub.com/

Remarks, imprint

No guarantee claims arise as a result of working in accordance with the instructions contained in this manual.

This does not affect the guarantee stipulations.

We are continuously involved in the further development of our industrial trucks. Please appreciate that this documentation is subject to alteration and error, and that no claims may be derived from information, illustrations and descriptions contained in the workshop manual .

Copyright protected. No part of this manual may be reproduced in any form. Copyright reserved.

Publisher

STILL WAGNER GmbH & Co. KG
Trainingcenter
Ernst-Wagner-Weg 1-5
72766 Reutlingen-Mittelstadt

https://truckmanualshub.com/

Production number and consecutive identification numbers

From now on, **a production number** will be used for the identification of industrial trucks. This production number is shown on the vehicle **nameplate**.

In the production number, the **vehicle type** is shown in the form of a code, and a **consecutive identification number** is included. In future, alterations will be introduced starting from a certain number.

When making enquiries, however, please always quote the complete production number.

As previously, the type number printed above will be used for identification of this workshop manual, in which all vehicle types in the FM group are described, and will continue to be quoted in the footer of every page, e.g.

Issue: 05/01 Replaces issue:	Workshop Manual **FM Type 447**	Sheet no. **M16**

This workshop manual describes 447 vehicle types with capacity 1,2t (FM12), 1,4t (FM14), 1,7t (FM17) and 2,0t (FM20).

Production numbers

Production number

61 1874 0 00001

FM12

Consecutive ID number

61 1875 0 00001

FM14

61 1876 0 00001

FM17

61 1877 0 00001

FM20

Copyright protected. No part of this manual may be reproduced in any form. Copyright reserved.

https://truckmanualshub.com/

Definition of movement directions

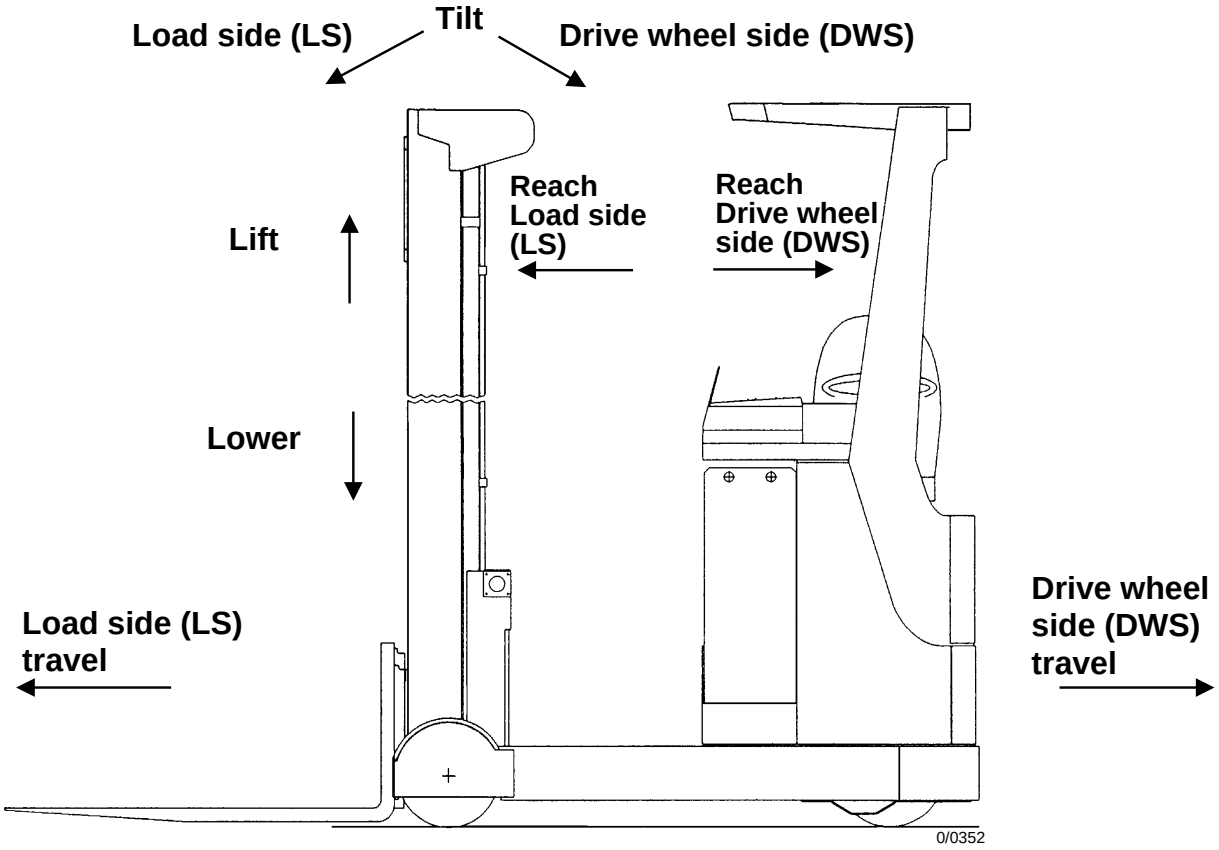

Left and right are as seen when looking in the direction of drive wheel side travel.

Copyright protected. No part of this manual may be reproduced in any form. Copyright reserved.

https://truckmanualshub.com/

Assemblies:

Foreword
Updating
Remarks, imprint
Production number and consecutive identification numbers
Definition of movement directions

A Travel drive
B Steering system
C Brake system
M Electrical system
N Hydraulic system
R Lubrication plan
V Service software

Copyright protected. No part of this manual may be reproduced in any form. Copyright reserved.

https://truckmanualshub.com/

Contents

Sheet no.

Drive motor
- General ..... A 2
- Technical data ..... A 2

Motor connection specifications ..... A 3
Carbon brush monitoring ..... A 4
Temperature monitoring ..... A 5
Speed sensor
- General ..... A 6
- Terminals ..... A 7
- Testing the speed sensor ..... A 7

Replacing the carbon brushes ..... A 8
Changing the drive wheel ..... A 9
Removing the drive motor ..... A 10
Installing the drive motor ..... A 12
- Mast hitch ..... A 13
- Half mast hitch ..... A 14

Removing / installing the gear ..... A 15
Commissioning the gear ..... A 16
Changing the gear oil ..... A 17
Drive motor maintenance ..... A 18

Copyright protected. No part of this manual may be reproduced in any form. Copyright reserved.

https://truckmanualshub.com/

Drive motor

Id. no. W8 409 661

General

The drive motor used in this vehicle is a 48V shunt motor.

The armature coil and field coil are regulated separately from the travel and pump controller.

The drive movement is initiated by application of voltage to the armature and excitation of the field with approx. 34 - 17A.

As soon as the armature voltage is equal to the battery voltage, the field current is reduced, in order to achieve an increase in speed.

The current speed of the drive motor is determined by current measurement (measuring shunt) in the travel and pump controller.

The drive motor is fitted with temperature monitoring (140°C) and carbon brush monitoring (see sheet no. A4-A5), as well as a speed sensor for standstill monitoring(see sheet no. A6-A7).

For further information on control of the drive motor, see sheet no. M17.

0/0343

Copyright protected. No part of this manual may be reproduced in any form. Copyright reserved.

Technical data

Model:	GF 144-14/4.5
Motor version:	Shunt motor
Voltage:	48V
Rated current (armature):	131A
Rated current (field):	16.8A
Speed (max.):	1680 rpm
Output:	5.2 kW
Protection class:	IP23
Insulation class:	F

https://truckmanualshub.com/

Motor connection specifications

Designation at the motor	Explanation
Main current terminals	
A1	Start of rotor coil
A2	End of rotor coil
F1	Start of shunt field coil
F2	End of shunt field coil
Sensor terminals	
X15.1	0 V - signal, temperature sensor (0 V = OK)
X15.4	0 V - supply, temperature sensor
X15.2	0 V - signal, carbon brush monitor (0 V = OK)
X15.5	0 V - supply, carbon brush monitor
X12.1	12 V - supply, speed sensor
X12.2	Signal A, speed sensor (positive switching)
X12.3	0 V - supply, speed sensor
X12.4	Signal B, speed sensor (not used)

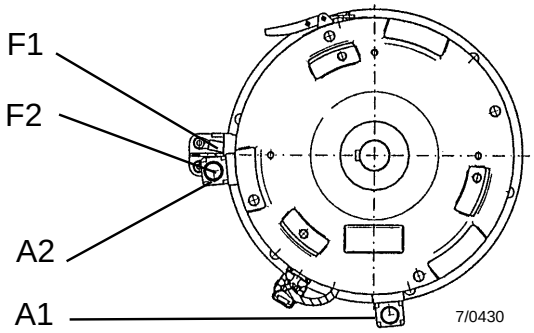

7/0430

0/0343

X15

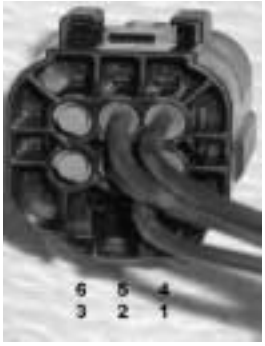

0/0345

X12

0/0344

Copyright protected. No part of this manual may be reproduced in any form. Copyright reserved.

https://truckmanualshub.com/

Carbon brush monitoring

The carbon brush yoke (1) in the drive motor is fitted with a monitoring switch (normally closed contact) (2). When the residual brush length is reached, this switch is opened by the brush spring.

This switching signal is transmitted to the FPS via signal leads (3) and (4).

The FPS sends the error message "FE21" to the display via the LAS-module (see sheet no. M30).
There is no resulting reduction in performance.

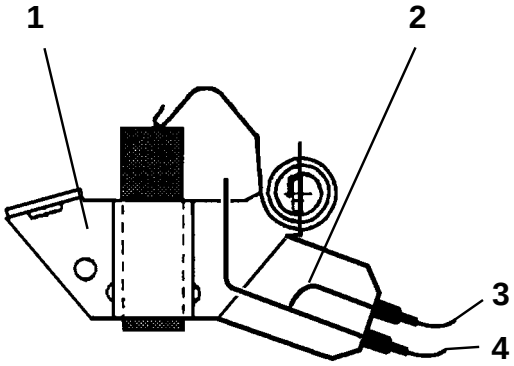

Carbon brush, new 6/0172

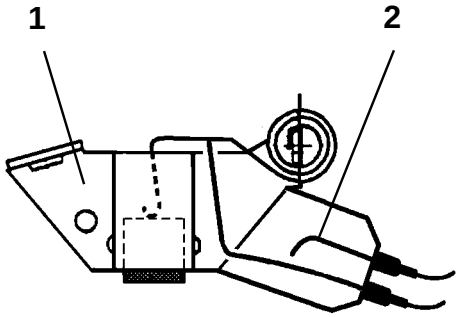

Carbon brush, worn 6/0173

Remark: All 4 carbon brushes are monitored (the signal contacts in the brush yoke are connected in series).

Note: When the brush spring is applied to the monitoring switch, this causes the spring pressure on the carbon brush to be significantly reduced.
As a result, the carbon brush begins to spark, and there is a risk that the commutator can catch fire. For this reason, it is absolutely essential to replace the carbon brushes immediately. The entire set of carbon brushes (4 brushes) must always be replaced together!

Copyright protected. No part of this manual may be reproduced in any form. Copyright reserved.

https://truckmanualshub.com/

Temperature monitoring

The temperature of the drive motor is monitored.
If the temperature sensor (1) is triggered (switching contact), the travel and pump controller reduces the power supply to the motor until the temperature drops below the critical point again.

At the same time, the error message "FE20" is sent to the display via the LAS-module (see sheet no. M30).

The temperature sensor (1) used here is a bi-metallic sensor, i.e. when its limit temperature is reached, its switching contact is opened (0V lead is broken).

The temperature sensor (1) is integrated in the brush yoke and can not be replaced separately.

The temperature sensor switching point is 140°C

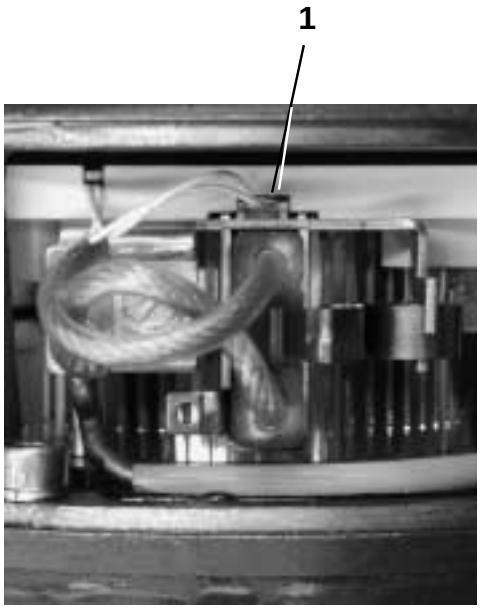

0/0346

6/0056

Drive motor temperature sensor

Copyright protected. No part of this manual may be reproduced in any form. Copyright reserved.

https://truckmanualshub.com/

Speed sensor

Id. no. W8 407 369

General

The speed sensor for the drive motor 1M1 is supplied with 12V by the LAS-module.
At its outputs, it delivers voltages of approx. 1V or approx. 11.5V, depending on its switching status.

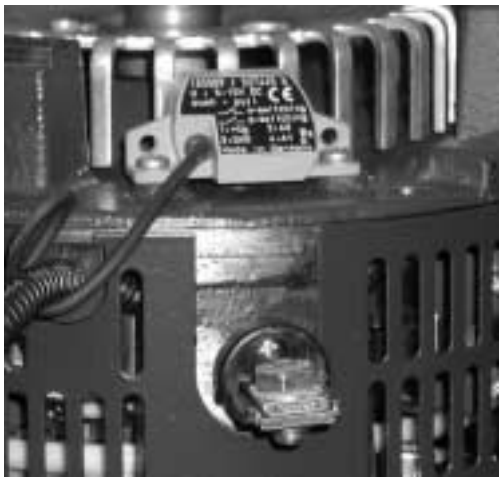

0/0347

The speed sensor uses two internal proximity switches to determine the speed and direction of rotation of the drive motor, although only the speed is evaluated (standstill monitoring). For this reason, only signal lead A is connected.

The standstill signal is sent to the steering via the LAS-module (CAN BUS). This causes the current characteristic (travel/standstill) to be switched over in the steering (see sheet no. B4).

Remark: The speed sensor was not evaluated or connected in the first delivered vehicles. In the past, standstill monitoring has been carried out internally by the travel and pump controller, and the signal was sent to the LAS -module (deadman and accelerator pedal actuated).
Evaluation of the speed sensor signal is possible from LAS-module software version 1.23.

Copyright protected. No part of this manual may be reproduced in any form. Copyright reserved.

https://truckmanualshub.com/

Speed sensor

Terminals

Wire 1: 12V supply voltage

Wire 3: 0V supply voltage

Wire 2: Signal A

Wire 4: Signal B (is not evaluated)

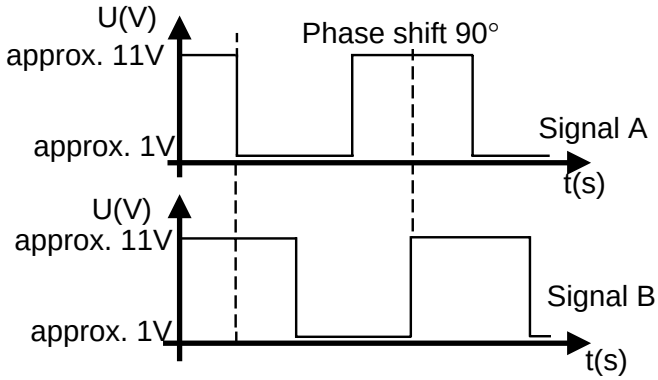

Assembly

The mounting distance between the counting wheel and the sensor should be between 1 and 2mm.

Testing the speed sensor

Note: Secure the vehicle to prevent it rolling away!

- Jack up the vehicle far enough to free the drive wheel.
- Switch on the vehicle.
- Check the power supply of the speed sensor between X12:1 (12V) and X12:3 (0V).
- Actuate the switch used to "release the magnetic brake".
- Accelerate the drive wheel. If not possible, turn the drive wheel by hand.
- Check the sensor signal. The voltage between X12:2 (Signal A) and X12:3 (0V) should be approx. 11V (alternating with 1V).

  If significantly less or no voltage is applied, the speed sensor is faulty.

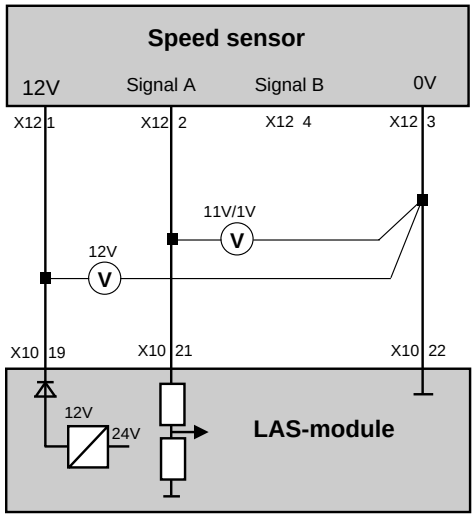

Copyright protected. No part of this manual may be reproduced in any form. Copyright reserved.

https://truckmanualshub.com/

Replacing the carbon brushes

Id. no. W8 405 854 (full set)

The carbon brushes must be replaced when a residual length of 50% has been reached (new: 40mm), or when the error message "FE21" appears on the display.

The entire set of brushes must always be replaced at the same time (4 brushes).

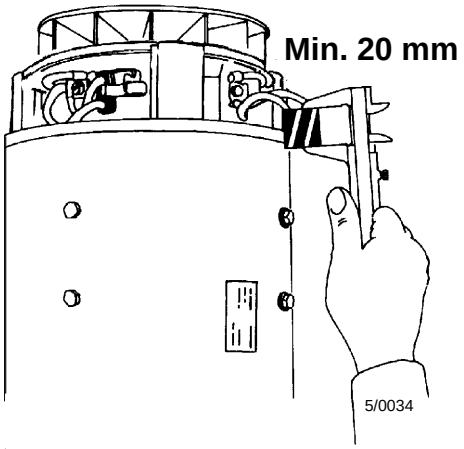

Removal

- Pull out the battery plug.
- Remove the vehicle covers.
- Remove the tensioning belt (1) of the drive motor.
- Raise the brush spring (2) with a hexagon socket screw key and remove the carbon at the connecting lead (3).
- Disconnect the connecting lead (4)
- Clean out the commutator space (by blowing).
  Note: The carbon dust is hazardous to the health. Always wear a protective mask!
- Insert the new carbon brushes.
  Remark: The motor should not be run at full power directly after the brushes have been replaced. The carbons run in relatively quickly under a low load.

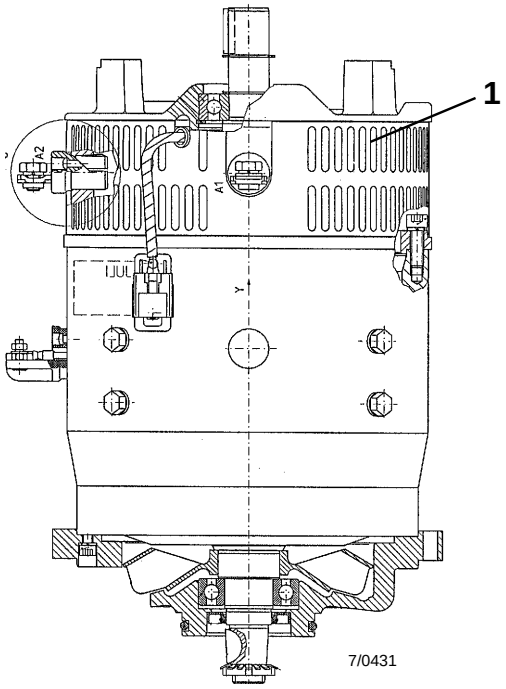

Copyright protected. No part of this manual may be reproduced in any form. Copyright reserved.

Checking the brush springs

Id. no. W8 405 853 (full set)

Brush springs which are not adequately pre-tensioned cause the commutator to burn.

Ensure that the carbon brushes move easily in the shaft.

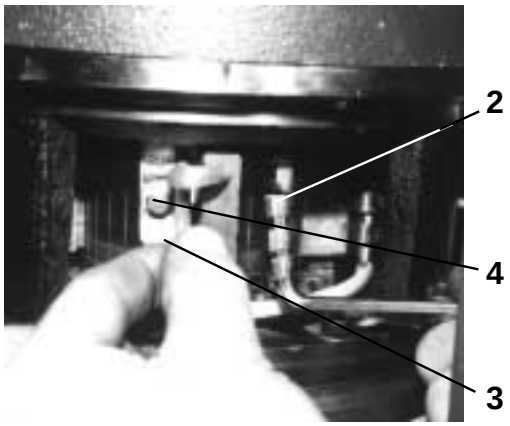

5-03 34

https://truckmanualshub.com/

Changing the drive wheel

Id. no. W8 365 234

Dimensions NEW: diam. 343 mm/136 mm

The drive wheel must be replace when:
- the running surface is out of round or cracks appear in it,
- the diameter of the tyre has decreased by 10%, e.g. 343 mm - 10% = 309 mm.

Remark: If the vehicle is steered when it is at a standstill, the degree of wear on the drive wheel is higher! For this reason, an excessive amount of steering when the vehicle is at a standstill should be avoided.

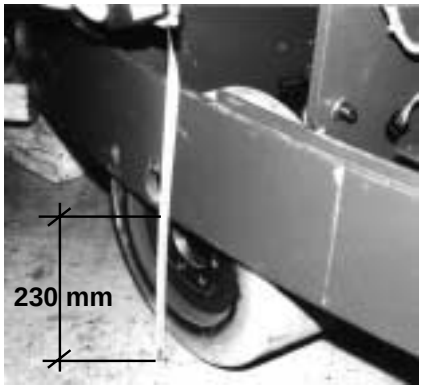

Fig. 1
5-01 19

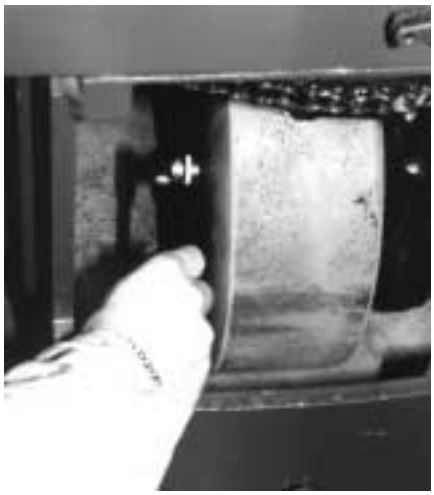
Fig. 2
5-01 17

Removal

- Jack up the vehicle to approx. 230 mm (Fig. 1) and secure it to prevent it rolling away.
- Remove the covers.
- Apply the parking brake with the switch.
- Move the drive wheel into the straight-on position and loosen the 7 drive wheel nuts (Fig. 2).
- Move the drive wheel into the 90° position and remove the nuts (Fig.3).
- Pull off the drive wheel, taking care not to damage the threaded bolts.
- Tilt the drive wheel down below the gear and pull it forwards (Fig. 4).

Fig. 3
5-01 18

When installing the new drive wheel, tighten the wheel nuts diagonally in several passes.
Tightening torque: 140 Nm

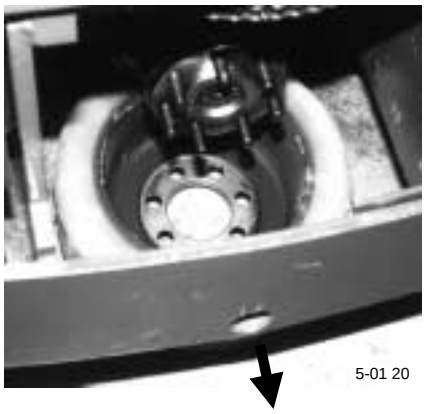
5-01 20 Fig. 4

Copyright protected. No part of this manual may be reproduced in any form. Copyright reserved.

https://truckmanualshub.com/

Removing the drive motor

Note: Once the drive motor has been removed, the vehicle is no longer braked. For this reason, always secure the vehicle before removing the drive motor, to prevent the vehicle from rolling away!

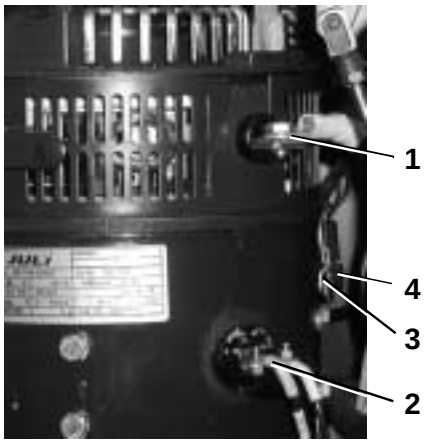

0/0348

- Pull out the battery plug.
- Check the labelling on the motor connecting cables and mark if necessary. Unscrew the connecting cables for the armature coil (1) and the field coil (2).
- Pull off the block connectors X15 for carbon brush and temperature monitoring (3) and X12 for the speed sensor connection (4).

  Remark: If the vehicle is fitted with an electrical seat adjusting system, the mechanical elements must be removed, to ensure good access.

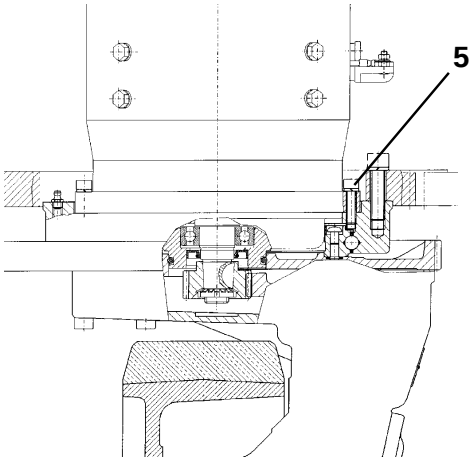

0/0349

- Completely remove the electromagnetic brake (see sheet no. C3).
- Release the 6 hexagon socket screws (5).
- Release the screw that fastens the motor pinion to the armature shaft and screw the special equipment eyebolt M8 (7) fully into the armature shaft.
- Attach the rope (special equipment - rope) to the eyebolt (8).

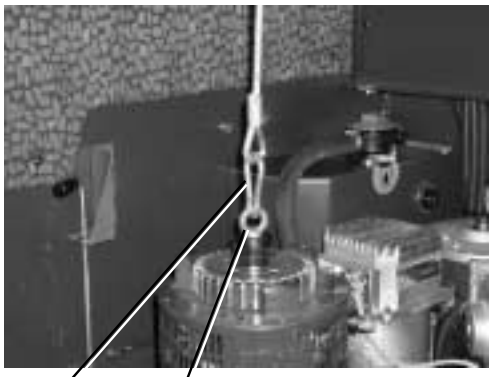

1/0036

Copyright protected. No part of this manual may be reproduced in any form. Copyright reserved.

https://truckmanualshub.com/

Removing the drive motor

- Attach the rope to the fork prongs of a fork-lift truck or to a crowbar with a mast hitch knot (1) (see sheet no. A 13).

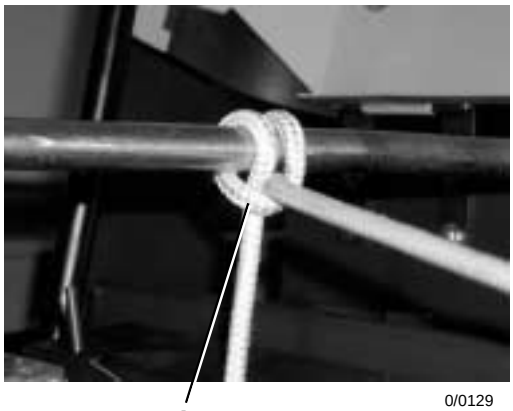

0/0129

Note: Never work without these special tools! A considerable amount of force is required to release the seal between the motor and the gear!

Raise the drive motor vertically, taking care not to let it tilt, otherwise there is a risk that the drive pinion and the gear may be damaged!

- Hold tight to the free end of the rope. Apply the crowbar to the vehicle chassis and lift out the drive motor.

  If you are working with a fork-lift truck, the rope must be highly tensioned. Use slight jerking movements at the drive motor to release the motor from the gear and then lift it out.

Remark: If the drive motor is lifted out with a rope that stretches, you must not try to lift the drive motor out with a fork-lift truck alone. If this is attempted, there is a severe jolt when the motor is separated from the gear and there is a risk that the drive motor and the vehicle may be damaged.

Copyright protected. No part of this manual may be reproduced in any form. Copyright reserved.

https://truckmanualshub.com/

Removing the drive motor

- Remove the special equipment
- Lift the drive motor out by hand.

Remark: When the drive motor has been removed, the opening left in the gear (1) must be closed off immediately, in order to prevent oil entering the inside of the gear.

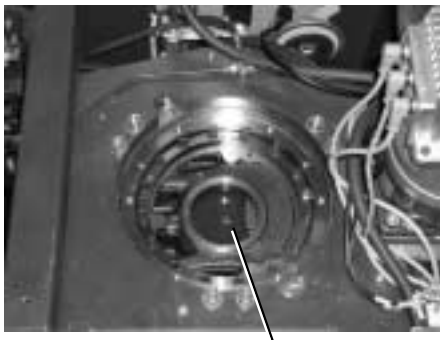

Installing the drive motor

Note: Only ever use the specified length of screw (M8x30), otherwise the four-point bearing may be damaged.

To install the travel motor, follow the instructions for removal in reverse order.

Clean the opening in the gear.

The drive motor must also be installed using the special equipment, in order to stop the motor tilting as it is inserted (risk of damage to the drive pinion and the gear).

The best method here is to lower the motor slowly into the gear using a rope attached to a crowbar with a "half mast hitch" (see sheet no. A14).

Remark: Tighten the 6 screws diagonally in several passes to 23Nm.

Copyright protected. No part of this manual may be reproduced in any form. Copyright reserved.

https://truckmanualshub.com/

Mast hitch

The mast hitch is a knot that can be used to secure a load at a specific point.

- Form a loop with the rope.

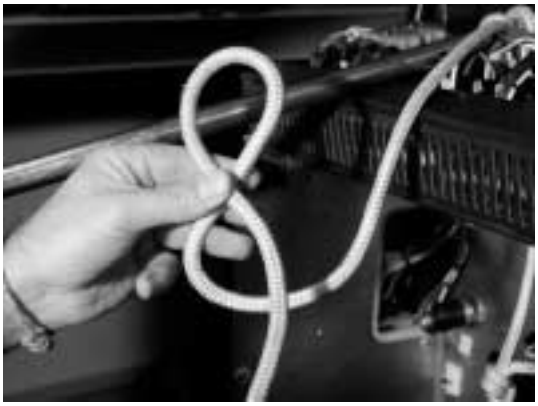

0/0132

- With the free end of the rope, form another loop next to the first one. It is important to remember that the end of the rope must always be on top of the loop (1).

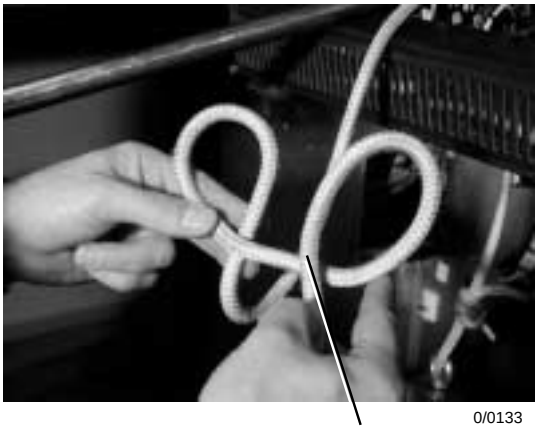

0/0133

- Push the second loop behind the first loop.
  If, for example, a drive motor is to be removed with a crowbar, the two loops must be pushed onto the crowbar in this position.
  Move the crowbar into position. Push the knot into position and pull out the load on your shoulder.

0/0134

Copyright protected. No part of this manual may be reproduced in any form. Copyright reserved.

https://truckmanualshub.com/

Half mast hitch

The half mast hitch is a knot that can be used to hold heavy loads with very little force and lower them under control.

- Form a loop with the rope.

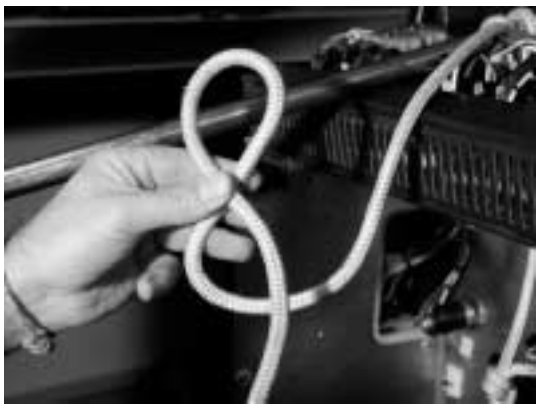

0/0132

- Lead the rope to the back to form a kink.

0/0111

- Push the crowbar through the loop and the bend.

  Move the crowbar into position. Push the knot into position and hold the free end in one hand. Lower the load by slowly feeding out the rope.

0/0112

Copyright protected. No part of this manual may be reproduced in any form. Copyright reserved.

https://truckmanualshub.com/

Removing the gear

- Pull out the battery plug.
- Jack up the vehicle to approx. 230 mm (Fig. 1) and secure it to prevent it rolling away.
- Remove the covers.
- Remove the drive wheel.
- Remove the drive motor.
- Drain off the gear oil (see sheet no. A17).
- Replace the oil drainage screw.
- Secure the gear with a pulley (Fig. 2) or a second fork-lift truck (see also description for removing the drive motor).
- Remove the 6 cheese-head screws (1).
- Carefully lower the gear by lowering the pulley or the second fork-lift truck. The wheel bolts must face upwards here.
- Remove the gear. To do so, pull it forwards and tilt it upwards (Fig.4).

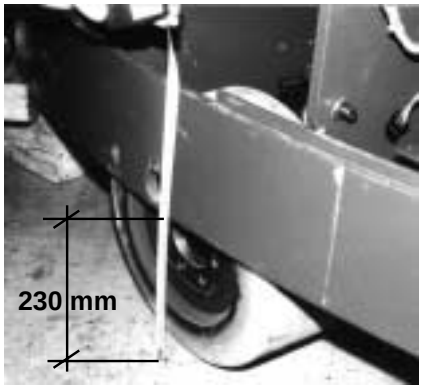

Fig. 1

5-01 19

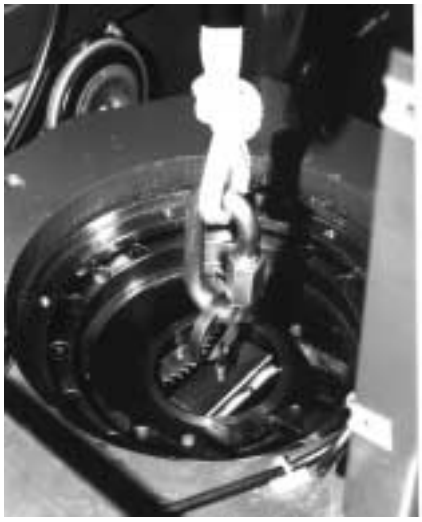

Fig. 2

5-01 31

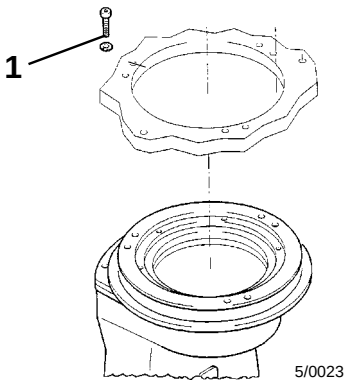

Fig. 3

Fig. 4

Copyright protected. No part of this manual may be reproduced in any form. Copyright reserved.

Installing

To install the gear, follow the instructions for removal in reverse order. The tightening torque for the cheese-head screws is (1): **80Nm**.

Remark: Once the gear has been installed, the electrical steering must be newly adjusted (see sheet no. B22).

https://truckmanualshub.com/

Commissioning the gear

Id. no. W8 424 307

The following types of gear oil are used:

Standard oil:	SAE 80
Ambient temperature:	0°C to 40°C
Id. no. W8 036 925	
Low temperature oil:	SAE 75 W-90 partly synthetic
Ambient temperature:	to -40°C
Id. no. W8 036 929	

For vehicle use in special conditions, please contact the manufacturer for further information.

Oil volume: approx. 3.6 l
Transmission: i = 15.93

Remark:

The given amount of oil is a guideline only. The correct amount of oil is that required for the level to reach the lower edge of the filling hole (1). This means that the spur gear is submerged in oil by about 1/3 of its height (2).

Overfilling must be avoided, otherwise oil can escape at the gear bleeder screw, the seals may be damaged and it is possible that the operating temperature may not be maintained. Check that the gear bleeder screw is clean.

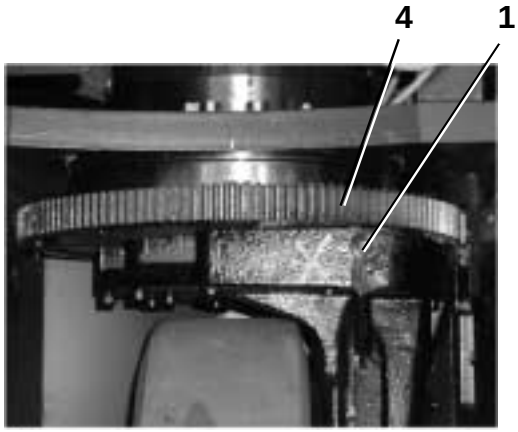

0/0350

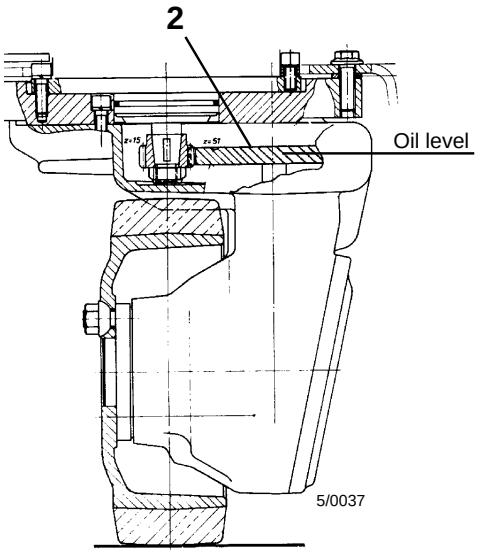

5/0037

Lubricating the bogie bearing

The bogie bearing should be lubricated once a year through the two lubricating nipples (3). This is particularly important every time the gear has been cleaned (e.g. with steam jets).

Grease type: All-purpose grease

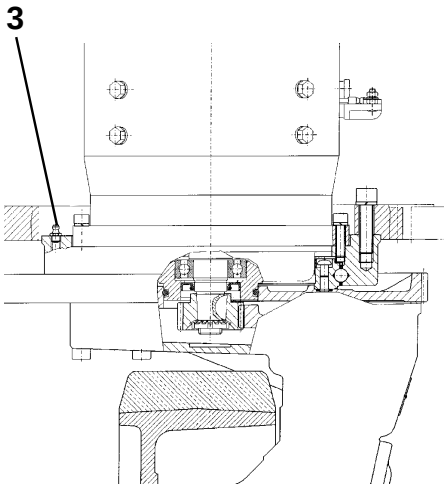

0/0349

Lubricating the gearwheel steering:

The gearwheel (4) should be lubricated every 3 months with all-purpose grease.

Copyright protected. No part of this manual may be reproduced in any form. Copyright reserved.

https://truckmanualshub.com/

Changing the gear oil

The first oil change must be carried out after approx. 50-100 operating hours.
All further oil changes should be made after approx. 2000 operating hours or once a year. Between the oil change intervals, the oil level should be checked every quarter and topped up if necessary.

Remark: The gear oil must be drained off when the vehicle is warm. The maximum permissible operating temperature is 80°C.

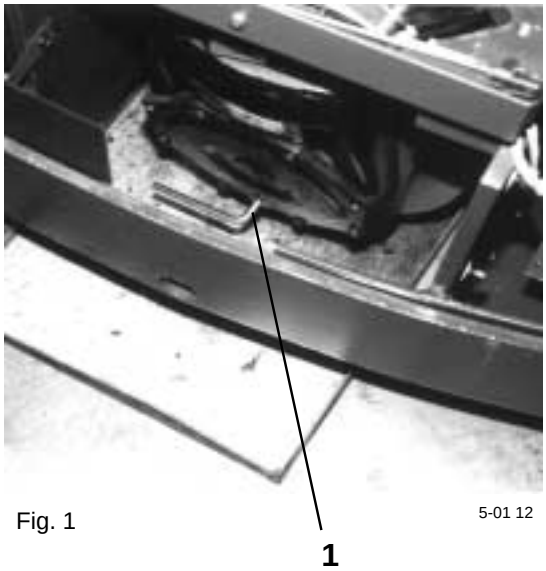

Fig. 1 5-01 12

Changing the oil

- Jack up the vehicle and secure it to prevent it rolling away.
- Move the gear into the drainage position (see Fig. 1).
- Position an oil catchment vessel under the oil drainage screw (1). It should have a volume of approx. 4l.
- Remove the oil filler screw (2).
- Remove the oil drainage screw (1) and allow the oil to run out.

  Note: The oil temperature may be as high as 80°C.

- Screw the oil drainage screw back in place, using a new sealing ring (**Id. no. W8 001 795**).
- Fill with new gear oil, up to the lower edge of the threaded hole for the oil filler screw.
- Screw the oil filler screw back in place with the sealing ring.

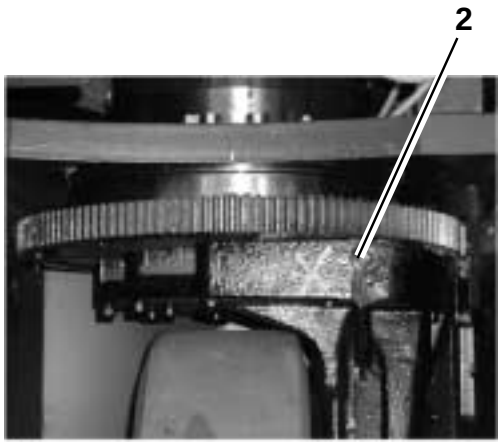

Fig. 2 0/0350

Copyright protected. No part of this manual may be reproduced in any form. Copyright reserved.

https://truckmanualshub.com/

Drive motor maintenance

General

The maintenance work required between full overhauls consists of:

- Cleaning
- General visual inspections
- Replacing damaged parts
- Checking the brush device and commutator
- Replacing the carbon brushes (if necessary)

This work should be carried out at least every 500 operating hours or once a quarter.

We recommend entrusting a major overhaul of a motor to a workshop which specialises in work of this kind, since special tools and expertise are required for this work.

Note: The battery plug must always be pulled out before work is started on the motor, in order to prevent short circuits and injury.

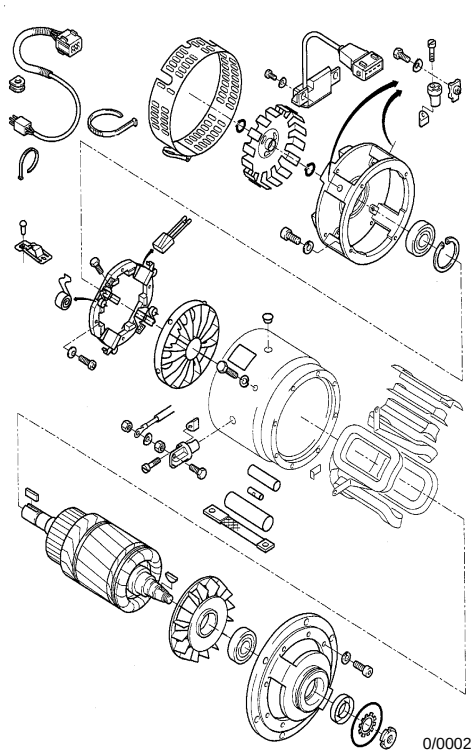

Cleaning

- Remove the cover strip and take out the brushes.

- Clean the motor out thoroughly with compressed air (do not inhale the dust, always wear a protective mask).

- Clean soiled commutators and brush mechanisms with a clean cloth moistened with petrol (do not use cleaning wool) and dry thoroughly.

Remark: Do not lift the brush springs higher than necessary and do not bend them to the side.

Note about risk of overloading when batteries are discharged:

If the motor speed drops noticeably, work must be stopped immediately. The battery must be checked without delay and recharged if necessary.
Never drive the vehicle when the voltage is too low!

Copyright protected. No part of this manual may be reproduced in any form. Copyright reserved.

https://truckmanualshub.com/

Contents

Sheet no.

Block diagram ..... B 2
General / technical data for steering unit ..... B 3
Function ..... B 4
Steering unit ..... B 6
- General ..... B 6
- Connections ..... B 6
- Error codes ..... B 8
- Removal ..... B 10
- Installation ..... B 11

Dismantling the drive unit ..... B 12
Setpoint potentiometer ..... B 13
- General ..... B 13
- Connections / signals ..... B 14
- Testing ..... B 15
- Removal ..... B 15
- Installation ..... B 16
- Adjusting the turning force of the steering wheel ..... B 17

Actual value potentiometer ..... B 18
- General ..... B 18
- Connections / signals ..... B 19
- Testing ..... B 20
- Removal ..... B 20
- Installation ..... B 21

Adjustment of the entire steering system ..... B 22

Copyright protected. No part of this manual may be reproduced in any form. Copyright reserved.

https://truckmanualshub.com/

Block diagram

Remark 1:
In the 1st version of the vehicle, the speed sensor is not evaluated as a "Vehicle moving/at standstill" detector (not possible until LAS-module V1.23).
Here, the information is transferred directly from the FPS (via internal RS232 connection)! When this identification code is received, the max. steering motor current is increased or reduced (reduced at a standstill).

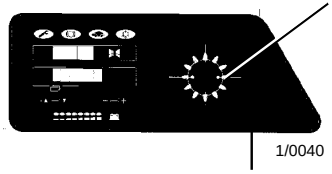

X*:
- Vehicle moving/at standstill
- Steering adjustment with the Servicemaster software

Remark 2:
In the 1st version of the vehicle, the setpoint and actual value potentiometers are still connected via an external DC/DC converter. This converts the unstabilised 16V supply for the steering unit into a stabilised 12V supply for the potentiometer. This converter is integrated in the steering unit in the 2nd version.

Copyright protected. No part of this manual may be reproduced in any form. Copyright reserved.

https://truckmanualshub.com/

General

The steering (1) is a fully electrical 180° toothed gear steering system made up of the following components:

- Steering unit (2)
- Drive unit (3) with actual value potentiometer (4)
- Setpoint potentiometer (5)

The steering system is practically mainten-ance free. Only the toothed gears (6) and (7) must be lubricated with all-purpose grease as part of the quarterly maintenance plan.

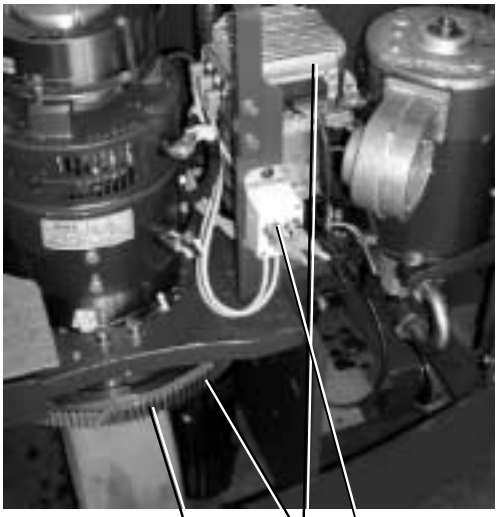

1/0042

Technical data for the steering unit

Id. no. (until 06/01)	:	8 424 045 / 8 426 351 AT
Id. no. (from 07/01)	:	8 425 916 / 8 426 559 AT
Model	:	SL 062-Z1
Motor version	:	Carbon-brush free DC-motor with permanent magnet and flange-mounted cyclo gear
Voltage	:	48V
Speed	:	2400 rpm
Output	:	500W
Protection cass	:	IP54
Insulation class	:	F
Steering speed	:	ca. 72°/s -> ca. 2.5s/180°

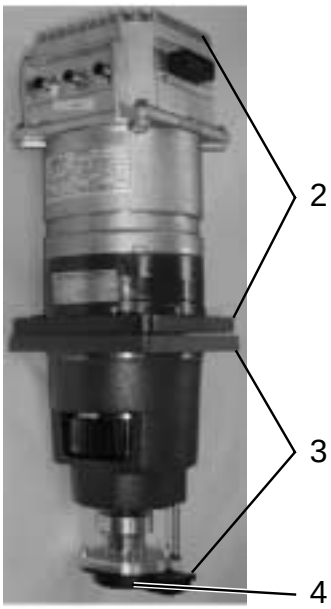

1/0043

Remark 1: If the steering is used when the vehicle is at a standstill, the degree of wear on the drive wheel is increased. For this reason, avoid excessive steering when the vehicle is at a standstill!

Remark 2: In the 1st version of the vehicle, the setpoint and actual value potentiometers are still connected via an external DC/DC converter. This converts the unstabilised 16V supply for the steering unit into a stabilised 12V supply for the potentiometer. This converter is integrated in the steering unit in the 2nd version (from 07/01 see Id. no. above).

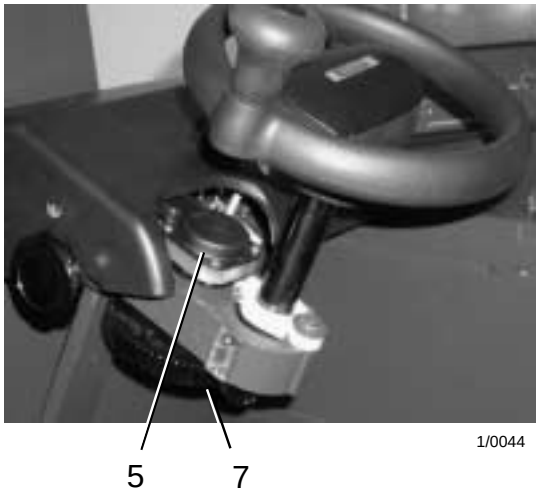

1/0044

Copyright protected. No part of this manual may be reproduced in any form. Copyright reserved.

https://truckmanualshub.com/

Function

When the vehicle is switched on, the steering is activated immediately, on condition that the voltage supply at connector X47 of the steering unit is fitted (see sheet no. B6), the setpoint and actual value potentiometers are connected and in working order and the steering does not detect any errors during the switch-on self-test.

In the event that there are errors, these are shown on the display in the form of an error code (see sheet no. B8).

When the steering wheel is turned, a change in the setpoint is generated, and this is compared in the steering logic with the value of the actual value potentiometer.

As long as the setpoint and actual values are different, the integrated power unit in the steering unit drives the integrated motor, in order to balance out the difference between the setpoint and actual values.

The steering logic receives the information "Vehicle moving/at standstill" via the CAN BUS.
At a standstill, a difference of Imax = 37A is only possible during the first 3 seconds after a difference has been detected, then the current is limited to I = 8A.

During travel, however, the theoretical Imax = 37A is always possible, but is not usually reached, since the rolling resistance of the wheel is considerably lower than the static friction resistance at a standstill.

As a result of derivation of the actual value potentiometer signal, the drive wheel position is sent via the CAN BUS to the LAS-module, which then in addition also evalues the actual travel direction and uses this information to drive the wheel position indicator on the display via the CAN BUS.

Copyright protected. No part of this manual may be reproduced in any form. Copyright reserved.

https://truckmanualshub.com/

Function

If an error occurs in the steering system during operation, the "Steering OK" signal is switched off (0V = OK) and the electro-magnetic brake on the drive motor is closed immediately via the LAS-module. Travel is also blocked. The relevant error code appears on the display (see sheet no. B8).

Because the "Steering OK" signal is also sent via the CAN BUS, if the CAN BUS between the steering and LAS-module fails, the brake is also closed and travel is switched off (redundant safety).

Remark 1: In the steering unit itself is an incremental encoder. This is checked every time the steering /vehicle is switched on. For this reason, it is normal for the steering to make a short movement to the right/left when the vehicle is switched on.

Remark 2: All the settings (except the basic mechanical settings) for the steering are made with the Servicemaster software" (see sheet no. V5).

Copyright protected. No part of this manual may be reproduced in any form. Copyright reserved.

https://truckmanualshub.com/

Steering unit

General

The steering unit is made up of
- The steering electronics with integrated power unit (1)
- Carbon brush free DC motor with permanent magnet (2)
- Cyclo gear (3)

The steering is one unit, and can only be replaced as a complete element.

1/0045

Connections

X47, 16 pin connector

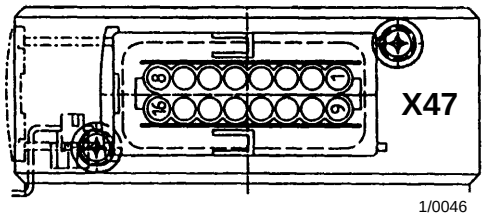

1/0046

1 +48V via emergency stop button (power supply)
2 +48V via emergency stop button (power supply)
3 +48V via emergency stop button (power supply)
4 +48V output, bridged with pin 10
5 0V (power supply)
6 0V (power supply)
7 0V (power supply)
8 0V (power unit)
9 n.c.
10 Bridged with pin 4, 48V power unit supply
11 2+48V, enable steering signal via key switch
12 "Steering OK" signal (0V active = OK)
13 n.c.
14 n.c.
15 n.c.
16 n.c.

X48/C, 4-pin connector (CAN BUS)

1	(brown)	CAN_H
2	(white)	CAN_L
3	(blue)	2+24V
4	(black)	0V

X48/C

Connector

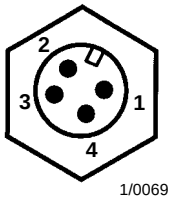

1/0069

Socket

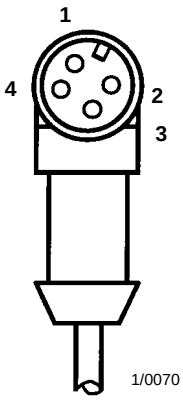

1/0070

Copyright protected. No part of this manual may be reproduced in any form. Copyright reserved.

https://truckmanualshub.com/

Steering unit

Connections

X49/G, 6-pin connector (actual value potentiometer)

1	(brown)	+16V
2	(white)	actual value signal 6V ± approx. 2.5V
3		n.c.
4		n.c.
5		n.c.
6	(pink)	0V

X50/L, 6-pin connector (setpoint potentiometer)

1	(brown)	+16V
2	(white)	Setpoint signal for main potentiometer 6V ± approx. 4.5V
3		n.c.
4	(black)	Setpoint signal for control potentiometer (90° phase shift) 8.5V ± approx. 4.5V with "zero point"
5		n.c.
6	(pink)	0V

X49/G and X50/L

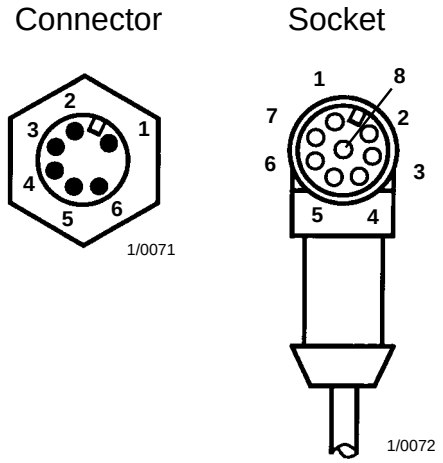

Remark: In the 2nd version of the steering unit (with integrated DC/DC-converter), the supply voltage of the setpoint/actual value potentiometer is 12V!
The external DC/DC converter on the vehicle for the steering is then no longer fitted (see sheet no. B3, Remark 2).

Copyright protected. No part of this manual may be reproduced in any form. Copyright reserved.

https://truckmanualshub.com/

Steering

Error codes

If the steering unit detects errors at its connected peripherals or internally, these are transmitted to the display and the LAS-module in the form of an error code (FEXX) via the CAN BUS. They are then shown on the display (flashing symbol and error code) (1) and stored in the error memory of the LAS-module.

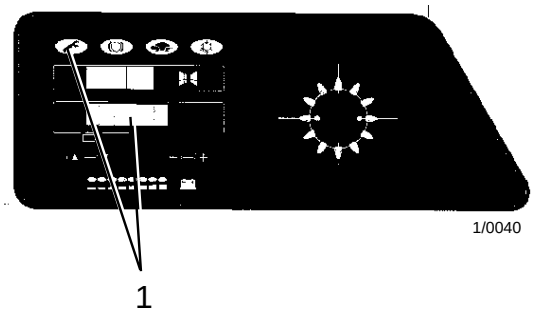

Remark: With all error codes the "Steering OK" output (X47, 12) is switched off. The electro-magnetic brake closes and travel is blocked.

FE80 = Steering supply voltage faulty; Check the power supply at X47 (see sheet no. B6). If OK, replace the steering unit.

FE81 = Check excess current in the steering power unit. See whether the steering is blocked mechanically by foreign elements or is difficult to turn due to mechanical damage. If OK, replace the steering unit.

FE82 = Excess temperature in the steering power unit, see FE81.

FE83 = Wire breakage / short circuit steering setpoint potentiometer.
Check the setpoint potentiometer and wiring between the potentiometer and steering unit (see sheet nos. B14+15)

Remark: FE85 can also be displayed together with FE83. The signals from the setpoint potentiometer can be checked using the "Diagnosis mode" in the Servicemaster software (see sheet no. V26),
This error code is also displayed if the "A/D converter calibration" has been carried out incorrectly (see sheet no. V8). FE 87 can also be displayed alternating with FE 83.

FE84 = Wire breakage / short circuit of steering actual value potentiometer.
Check the actual value potentiometer and wiring between the potentiometer and the steering unit (see sheet nos. B19+20)

Remark: The signals from the actual value potentiomer can be checked using the "diagnosis mode" in the Servicemast software (see sheet no. V26). FE 86 can also be displayed alternating with FE 84.

Copyright protected. No part of this manual may be reproduced in any form. Copyright reserved.

https://truckmanualshub.com/

Steering unit

Error code

FE85 = Motor model error, steering.
This error can also occur in connection with a faulty setpoint generator (see sheet no. FE83). If the setpoint generator is in working order, the steering unit must be replaced.

FE86 = Motor position control error, steering.
The steering unit must be replaced.

Remark: FE86 can also occur if the "A/D converter calibration" is not carried out correctly during commissioning of the steering (see sheet no. V8) or if the "360° option" has been activated when it should not be (see sheet no. V12). This can also appear alternating with FE 84.

FE87 = Internal steering error
The steering unit must be replaced.

Remark: FE87 can also occur if the "Flutter" of the setpoint potentiometer is too great (see sheet no. B14).
If this is the cause, it may be possible to adjust the flutter with the Servicemaster software (see sheet no. V10). If adjustment is not possible, the setpoint potentiometer must be replaced.

FE88 = CAN BUS steering error
The LAS-module sends telegrams continuously to the steering. These telegrams are counted up by a counter in the steering unit. If the steering unit detects the omission of a telegram (if the counter is not increased in a certain timescale), this error is generated.
At the moment, this error does not have any further effects on the vehicle. If it occurs, all this means is that there are short-term synchronisation problems on the BUS. More serious CAN BUS errors are indicated with other error codes.

Remark: From software version 2.10 of the steering, "FE88" is active, i.e. the "Steering OK" signal is now switched off when this error occurs (--> brake closed, vehicle at standstill).
In order for the error to be displayed, the LAS module must be updated to version 1.35 (see sheet no. V33).

FE89 = EEPROM steering error
The data in the steering unit has changed or is damaged. You can try to rectify the error by completely re-commissioning the steering (teaching-in, see sheet no. V5). If this is not successful, replace the steering unit.

Remark: In the event that components are replaced, the steering must always be completely re-commissioned ("teaching-in") (see sheet no. V5).

Copyright protected. No part of this manual may be reproduced in any form. Copyright reserved.

https://truckmanualshub.com/

Steering unit

Removal

Note: Once the steering unit has been removed, the vehicle can no longer be steered. For this reason, jack up the vehicle safely and prevent it from rolling away!

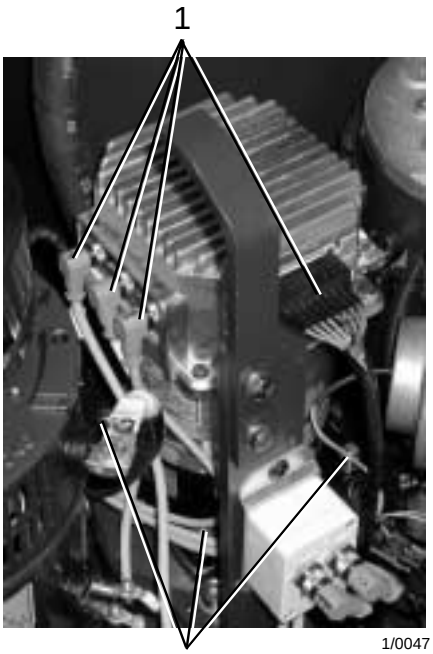

1/0047

- Remove all the covers in the area of the steering unit
- If the vehicle is fitted with an electrical seat adjusting mechanism, this must also be removed.
- Mark the electrical connections (1) and disconnect them.
- Pull the connector (2) out of the actual value potentiometer.

Note: The connector has a mechanical detent on the underside that must be released by hand. Do not use force, as this may damage the connector!

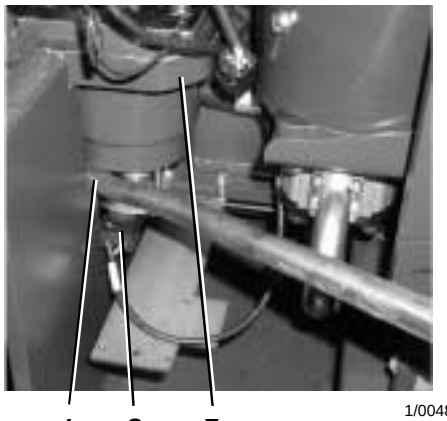

1/0048

- Release the 4 screws M10x45 (3).
- Use a crowbar (4) to lever the complete steering unit slightly out of its holder (5).
- Now lift the entire unit up and out and lay it to one side.

Note: Do not lift the unit up and out of its holder without using a crowbar, since the spline shaft coupling ("Simplaflex" (6)) that connects the steering unit and the drive unit may then be damaged.

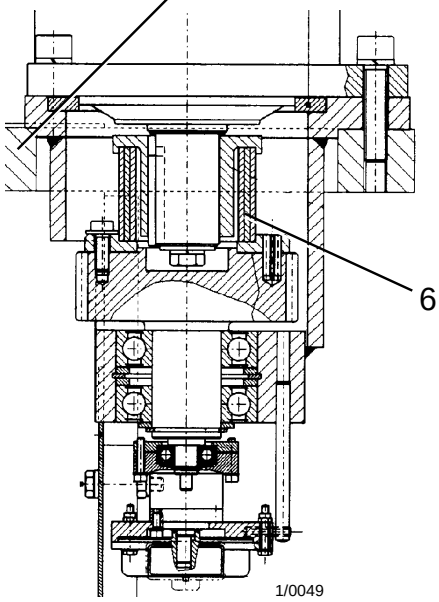

1/0049

Copyright protected. No part of this manual may be reproduced in any form. Copyright reserved.

https://truckmanualshub.com/

Steering unit

Removal

- The drive unit (1) can now be levered carefully out of the steering unit (2) with a screwdriver or similar tool.

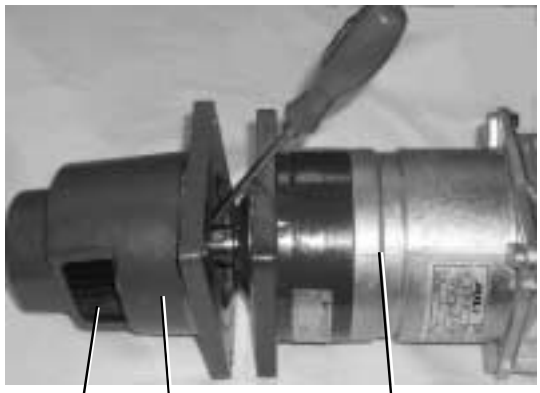

Fig. 1 1/0050

Installation

To replace the complete unit (steering/drive unit), follow the instructions above in reverse order. Pay particular attention to the following points:

- Before the complete unit can be inserted in the holder (3), the drive wheel must be turned to exactly the straight-on position with a crowbar (Fig. 3).
- The actual value potentiometer must be set to the straight-on position and a resistance measurement made between PINS 1 + 2 and PINS 1 + 5 of the actual value potentiometer (Fig. 4). Both measurements must give the same value (approx. 1400Ω, theoretically 1325Ω). If necessary, turn the toothed wheel (4) carefully with a screwdriver.
- Lower the assembly that has been pre-set in this way carefully into the holder (3) and secure it again with the 4 screws M10x45 (tightening torque 46Nm).
- Reconnect all the electrical connections.
- Use the Servicemaster software to carry out the "Commissioning steering" (teaching-in) process (see sheet no. V5).

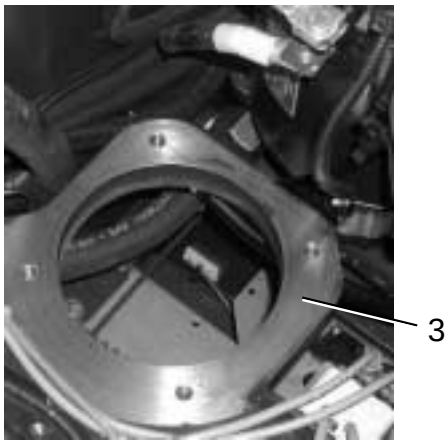

Fig. 2 1/0051

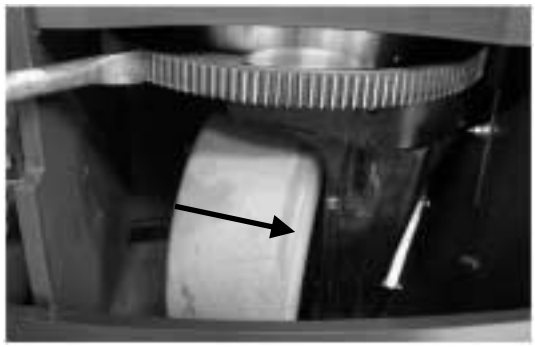

Fig. 3 1/0052

Fig. 4 1/0053

Copyright protected. No part of this manual may be reproduced in any form. Copyright reserved.

https://truckmanualshub.com/

Dismantling the drive unit

Once the complete steering unit has been removed and the drive unit levered out (see sheet nos. B10 + B11), the drive unit can be dismantled.

- Release the 4 hexagon screws M3x20 (1) and remove the potentiometer (2).
- Release the 4 screws M3x8 on the anti-torsion lock (3).
- Release the 4 screws M3x16 (4) on the planetary gear (5) and pull off the gear (Fig. 2).
- Remove the small circlip (6) and pull off the plate (7) with bearing.
- Remove the large circlip and washer (8).
- Push the drive pinion with spline shaft coupling out of the housing (Fig. 3).
- Once both the M6x18 screws (9) have been released, the spline shaft coupling (10) can be levered out carefully with a screwdriver.

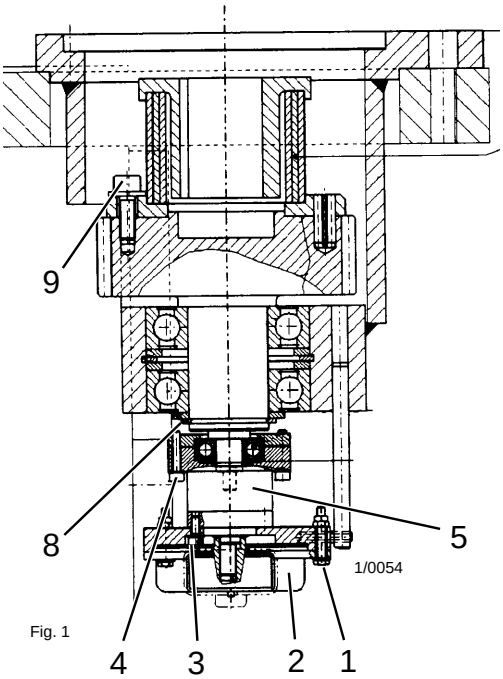

Fig. 1

Fig. 2 1/0055

Fig. 3 1/0056

To **assemble** the drive unit, follow the instructions above in reverse order (Fig. 4).

Fig. 4 1/0057

Copyright protected. No part of this manual may be reproduced in any form. Copyright reserved.

https://truckmanualshub.com/

Setpoint potentiometer

Id. no. W8 408 841

General

The setpoint potentiometer (1) is used to define the required steering direction.
It can be accessed by removing the two plastic shell covers (4 screws).

The potentiometer is connected to the steering wheel (3) by the transmission (2) (transmission ratio steering wheel : potentiometer = 4 : 1).

The two plastic sliding surfaces (4) are used to adjust the steering force (principle of static friction, see sheet no. B17).

Because the system is a 180° steering system, the maximum turning angle of the steering wheel is limited mechanically by the two tensioning points (5).

The potentiometer itself has a 2-channel design, i.e. it generates 2 setpoint signals with a phase offset of 90°(main/control potentiometer). Both the setpoint signals are evaluated by the steering logic and compared to one another (redundant safety).

Remark: If the setpoint potentiometer is faulty, the error message "FE83" appears on the display (see sheet no. B8).
This potentiometer is identical to the acual value potentiometer.

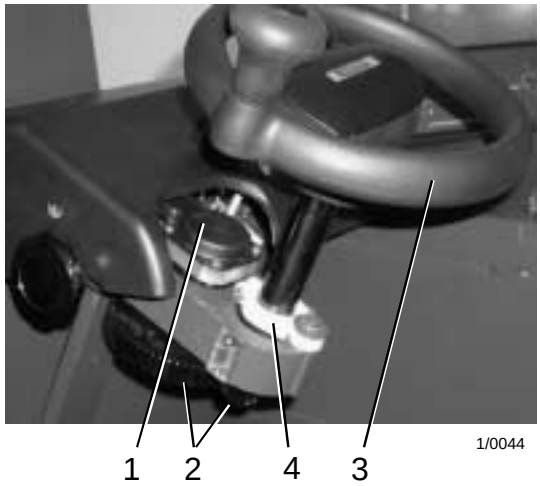

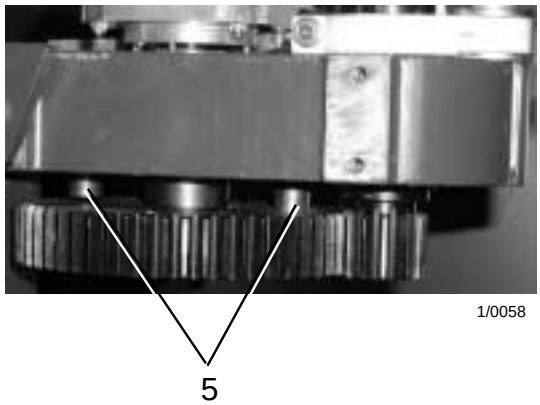

Copyright protected. No part of this manual may be reproduced in any form. Copyright reserved.

https://truckmanualshub.com/

Setpoint potentiometer

Connectors / signals

The potentiometer is connected to the steering logic at connector X1 (1).

Pin asignment, connector X1 (Fig. 2):

1 (white) : Setpoint, main potentiometer 6V ± approx. 4.5V
2 (brown) : 12V supply
5 (pink) : 0V supply
6 (black) : Setpoint, control potentiometer 8.5V ± approx. 4.5V

Remark: The control potentiometer has a "zero point" due to the 90° phase offset, i.e. at approx. 11V it jumps back to a starting value of approx. 1V (Fig. 4).

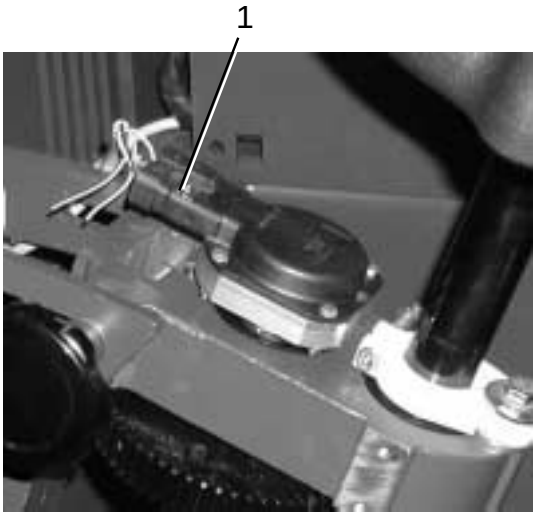

Fig. 1 1/0060

Resistance measurement

	Main potentiometer		Control potentiometer	
Pin	1 - 5	1 - 2	6 - 5	6 - 2
Left turn	~350Ω	~1.6KΩ	~980Ω	~1.6KΩ
Straight-on	~1.325KΩ	~1.325KΩ	~1.6kΩ	~900Ω
Right turn	~1.6KΩ	~350Ω	~750KΩ	~1.55KΩ

Remark: The absolute values at the end points and centre position are not particularly important, since the potentiometer is read in (Teaching-in steering; see sheet no. V5).
In addition, the static current is monitored by the potentiometer and the "flutter" of R1 and R2 (ΔR1-R2). The maximum permissible flutter can be adjusted (see sheet no. V10).

Fig. 2 1/0061

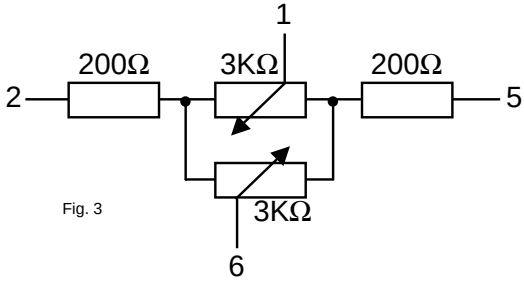

Fig. 3

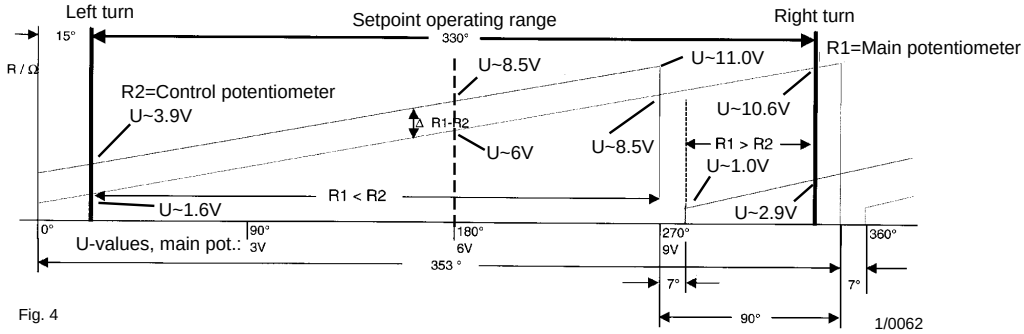

Fig. 4 1/0062

Copyright protected. No part of this manual may be reproduced in any form. Copyright reserved.

https://truckmanualshub.com/

Setpoint potentiometer

Testing

There are several means of checking that the potentiometer functions correctly:

- By measuring the resistance/voltage (see sheet no. B14).
- By testing the setpoint signals/the potentiometer with the "Servicemaster software".

The "Servicemaster software" (see sheet no. V26) can be used to test the following values with "Diagnosis-standard-analogue values of the steering":

- The setpoint signals of the main/control potentiometer,
- The static current with the potentiometer (also known as cross-current),
- The "Flutter" beween main/control potentiometers (ΔR1-R2).

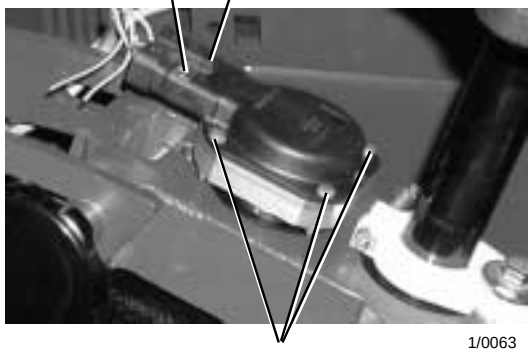

1/0063

1/0064

Removal

- Remove the covers in the area of the setpoint generator.
- Disconnect connector X1 (1)

Remark: The connector has a mechanical lock (2). You can release this by pressing it down with your finger.

- Remove the 4 screws (3).
- Remove the potentiometer (4) upwards.

Remark: Ensure that the sealing ring (5) is not lost or damaged.

Copyright protected. No part of this manual may be reproduced in any form. Copyright reserved.

https://truckmanualshub.com/

Setpoint potentiometer

Installation

- Turn the steering wheel to the left (anti-clockwise) until it reaches the mechanical stop.
- Turn the steering wheel 2 turns to the right (clockwise).
- The steering wheel is now in the straight-on position.
  The two tensioning pins (1) should now be flush with one another.
  The steering wheel is then in the so-called "9 o'clock position" (Fig. 2).
- Now push the potentiometer onto the free shaft end (2) of the transmission.
  As you do so, ensure that the potentiometer shaft (2), as shown in Fig. 3, points upwards (flattened side faces up).
- Secure the potentiometer with the 4 screws (3).
- Push in connector X1 (4).

Remark: A measurement must now be carried out to check whether the potentiometer is now also in the centre position with regard to the resistance value!
The same resistance value of approx. 1325Ω should be measured between pins 1 + 2 and 1 + 5 (see sheet no. B14).

- Mount the covers

Once the potentiometer has been mounted, it must be read in using the "Servicemaster software" ("Teaching-in", see sheet no. V5, "Commissioning the steering").

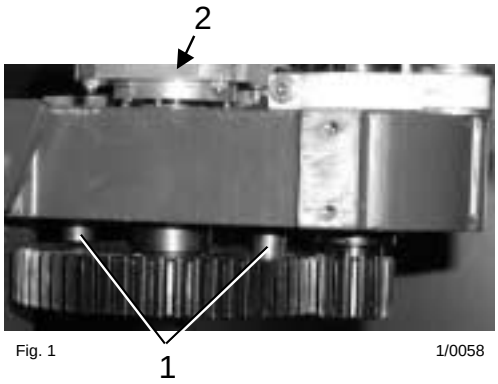

Fig. 1 1/0058

Fig. 2 1/0065

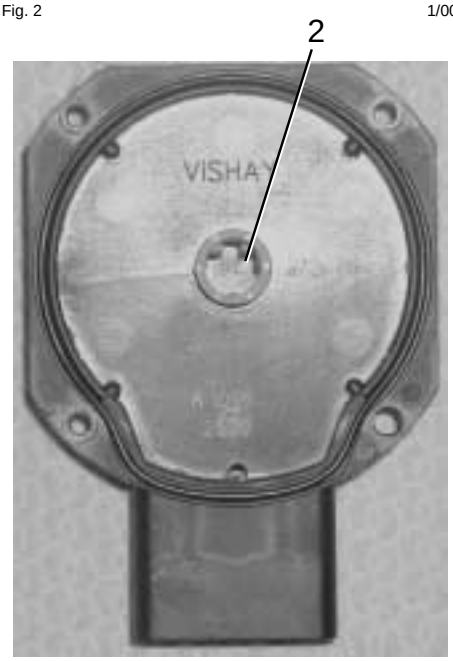

Fig. 3 1/0064

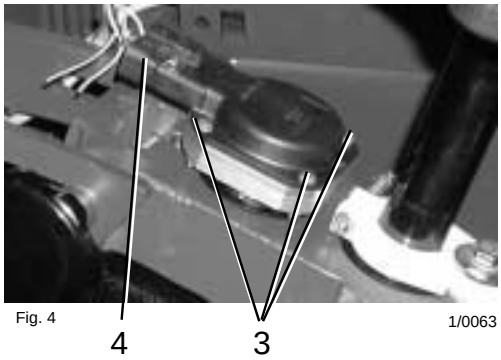

Fig. 4 1/0063

Copyright protected. No part of this manual may be reproduced in any form. Copyright reserved.

https://truckmanualshub.com/

Setpoint potentiometer

Adjusting the turning force of the steering wheel

The static friction of the steering column (2) and consequently the turning force on the steering wheel can be adjusted at the two plastic jaws (1).

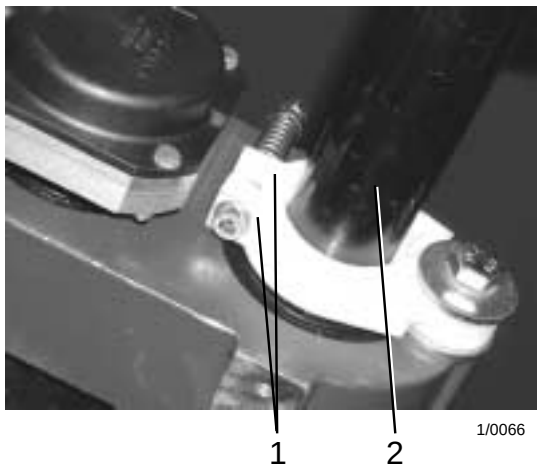

To alter the static friction:

- Release the lock nut (3),
- Turn the adjusting nut (4) to the left to increase the steering force,
- Turn the adjusting nut (4) to the right to reduce the steering force,
- Tighten the lock nut again.

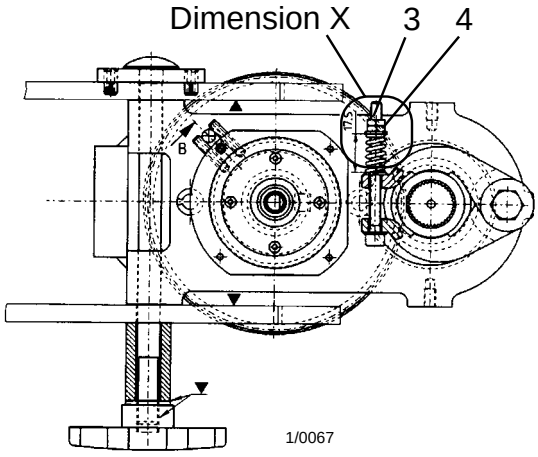

Remark: A defined turning force is pre-set in the factory. It is derived from the measurement X = 17.5 mm for the initial spring tension.

Copyright protected. No part of this manual may be reproduced in any form. Copyright reserved.

https://truckmanualshub.com/

Actual value potentiometer

Id. no. W8 408 841

General

The actual value potentiometer (1) measures the actual position of the drive wheel.
The potentiometer is connected to the drive unit (3) of the steering by the transmission (2) (transmission ration drive unit : potentiometer = 4 : 1).

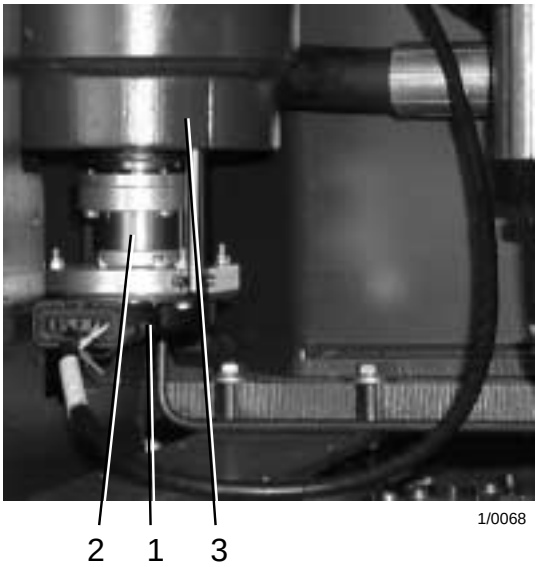

The potentiometer itself has a 2-channel design, i.e. it generates 2 actual value signals, but only the signal from the "Main potentiometer" is sent to the steering logic.

As a redundant safety feature, this actual value potentiometer is compared with the signals from the internal incremental encoder of the steering unit (see sheet B5, Remark 1).

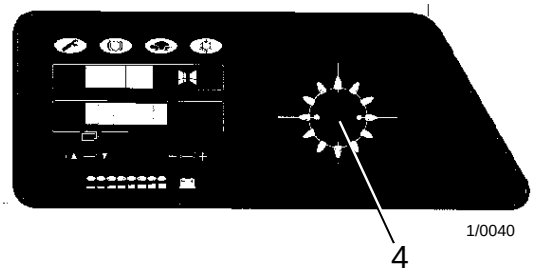

The steering logic evaluates the actual value signal and sends this information via the CAN BUS to the LAS-module. From here, the information about the drive wheel position, linked with the travel direction, is sent via the CAN BUS to the display. Here, the wheel position is displayed integrated with the travel direction (4).

Remark: If the actual value potentiometer is faulty, error message "FE84" appears on the display (see sheet no. B8). This potentiometer is identical to the setpoint potentiometer.

Copyright protected. No part of this manual may be reproduced in any form. Copyright reserved.

https://truckmanualshub.com/

Actual value potentiometer

Connections / signals

The potentiometer is connected to the steering logic with connector X1 (1).

Pin assignment for connector X1 (Fig. 2):

1 (white) : Actual value, main potentiometer 6V ± approx. 2.5V
2 (pink) : 0V supply
5 (brown) : 12V supply
6 (black) : n.c.

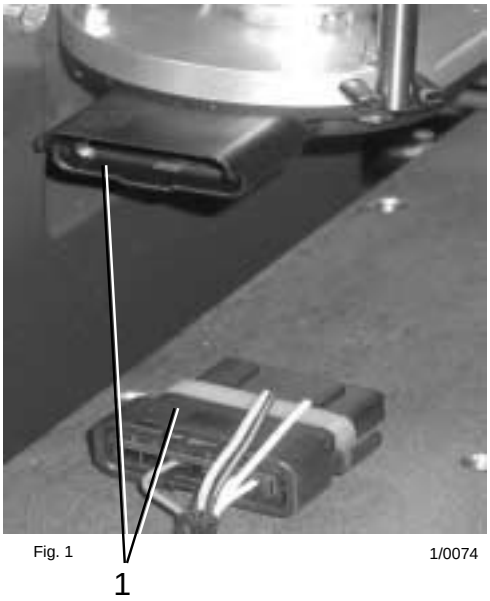

Fig. 1 1/0074

Resistance measurement

	Main potentiometer	
Pin	1-5	1-2
Left (-90°)	~ 370 Ω	~ 1.7kΩ
Centre	~ 1.325kΩ	~ 1.325kΩ
Right (+90°)	~ 1.7k Ω	~ 370 Ω

Fig. 2 1/0061

Remark: The absolute values at the end points and centre position are not particularly important, since the potentiometer is read in (Teaching-in steering; see sheet no. V5 "Servicemaster software", "Commissioning steering").
The static current through the potentiometer is monitored (see sheet no. V31).

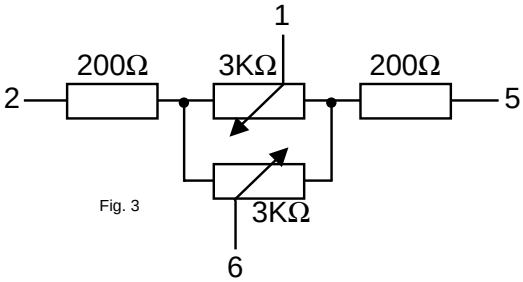

Fig. 3

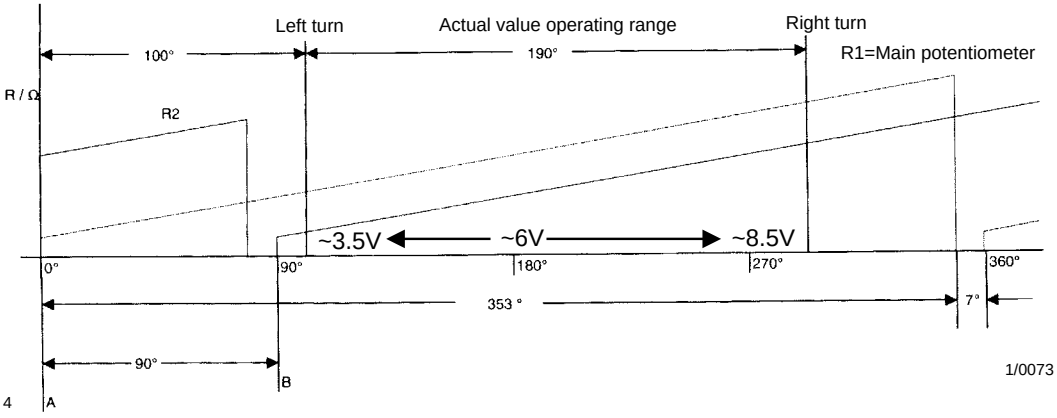

Fig. 4

Copyright protected. No part of this manual may be reproduced in any form. Copyright reserved.

https://truckmanualshub.com/

Actual value potentiometer

Testing

There are several means of checking that the potentiometer functions correctly:

- By measuring the resistance/voltage (see sheet no. B19).
- By testing the actual value signal/the potentiometer with the "Servicemaster software"

The "Servicemaster software" (see sheet no. V26) can be used to test the following values with "Diagnosis-standard-analogue values of the steering":

- The actual value signal from the main potentiometer
- The static current through the potentiometer (also known as cross-current).

Removal

- Remove the covers in the area of the actual value potentiometer.
- Remove the plate of the side shift damping (1).
- Turn the drive wheel into the straight-on position, using a crowbar if necessary (Fig. 2).
- Pull out connector X1 (2).

Note: The connector has a mechanical detent on the underside that must be released by hand. Do not use force, otherwise the connector will be damaged!

- Release the 4 screws (3) on the potentiometer and remove the potentiometer from below.

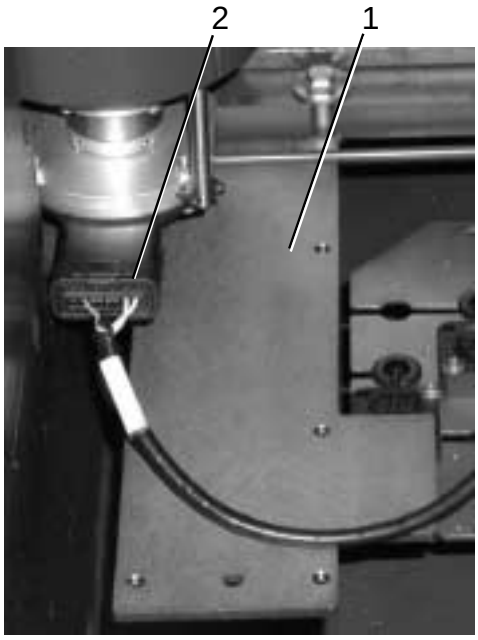

Fig. 1 1/0075

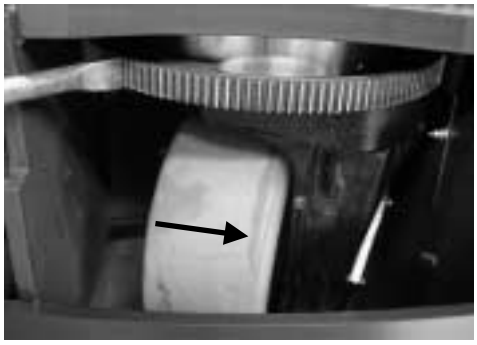

Fig. 2 1/0076

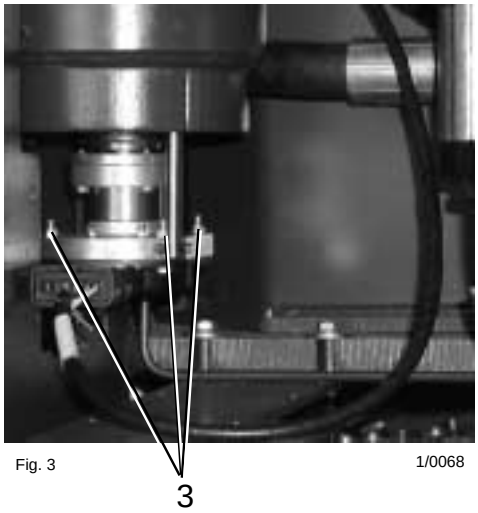

Fig. 3 1/0068

Copyright protected. No part of this manual may be reproduced in any form. Copyright reserved.

https://truckmanualshub.com/

Actual value potentiometer

Installation

- The drive wheel must be in the straight-on position. If necessary, turn it into this position with a crowbar (Fig. 1).

Remark: The flat side of the drive shaft (1) of the transmission should now face towards the tank.

- Push the potentiometer onto the shaft end (1). As you do so, ensure that the potentiometer shaft (2), as shown in Fig. 3, points upwards (flattened side faces up).
- Secure the potentiometer with the 4 screws (3).
- Push in connector X1 (4).

Remark: A measurement must now be carried out to check whether the potentiometer is now also in the centre position with regard to the resistance value!
The same resistance value of approx. 1325Ω should be measured between pins 1 + 2 and 1 + 5 (see sheet no. B19).

- Mount the covers and the plate of the side shift damping again.

Once the potentiometer has been mounted, it must be read in using the "Servicemaster software" ("Teaching-in", see sheet no. V5, "Commissioning the steering").

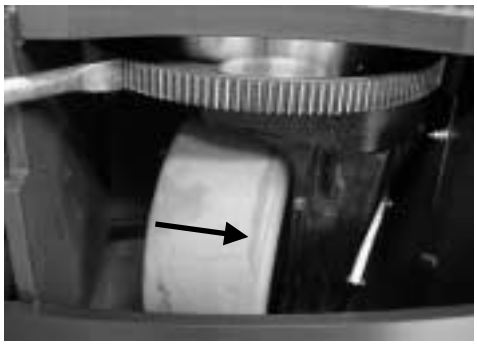

Fig. 1 1/0076

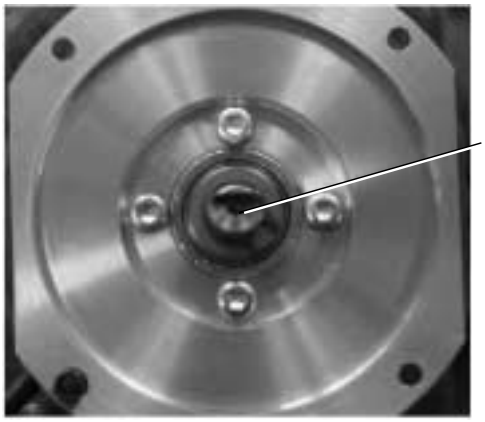

Fig. 2 1/0077

Fig. 3 1/0064

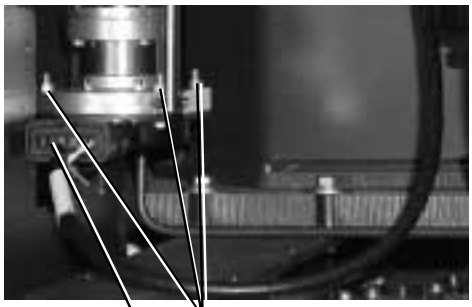

Fig. 4 1/0078

Copyright protected. No part of this manual may be reproduced in any form. Copyright reserved.

https://truckmanualshub.com/

Adjusting the entire steering system

Adjustment of the steering system includes:

- Mounting and adjusting the setpoint potentiometer (1)
- Mounting and adjusting the actual value potentiometer (2)
- Mounting and adjusting the complete steering unit (3).

Fig. 1 1/0063

Setpoint potentiometer

For mechanical installation, see sheet no. B16. All other necessary adjusting work is carried out with the Servicemaster software (4, see sheet no. V5) under "Commissioning-Steering-Start teaching-in" (reading in the setpoint key data).

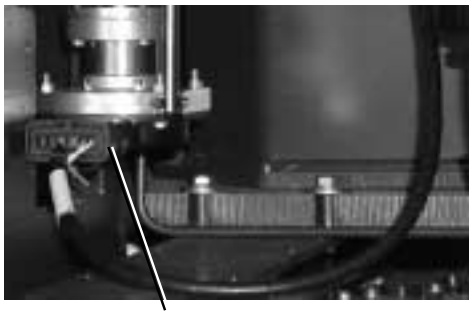

Fig. 2 1/0078

Actual value potentiometer

For mechanical installation, see sheet no. B21. All other necessary adjusting work is carried out with the Servicemaster software" (4, see sheet no. V5) under "Commissioning-Steering-Start teaching-in (reading in the actual value key data).

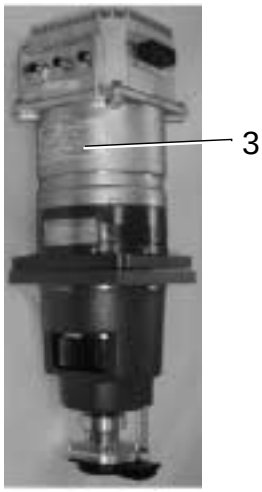

Fig. 3 1/0043

Complete steering unit

For mechanical installation, see sheet no. B11. All other necessary adjusting work is carried out with the Servicemaster software (4, see sheet no. V5) under "Commissioning-Steering-Start teaching-in.

In addition, the following parameters can be changed with the software (4, see sheet no. V5-12):

- "Correction value" for the straight-on position of the drive wheel.
- Switching over to reverse steering
- "Correction value" for monitoring the "flutter" of the main/control potentiometer of the setpoint generator (ΔR1-R2 monitoring)
- Analogue/digital converter calibration in the steering logic.

Fig. 4 1/0079

Copyright protected. No part of this manual may be reproduced in any form. Copyright reserved.

https://truckmanualshub.com/

Contents

Sheet no.

General .....C 2
Electro-magnetic brake
- Function .....C 2
- Removal .....C 3
- Changing the brake disk .....C 4
- Adjusting the brake clearance .....C 5
- Adjusting the braking moment .....C 6
- Releasing the brake mechanically .....C 6
- Checking the brake coil .....C 7
Hydraulic/mechanical brake
- Function .....C 8
- Plan of the hydraulic braking system .....C 9
- Removal .....C 10
- Adjusting the brake clearance .....C 11
- Adjusting the brake pedal .....C 12
- Bleeding / filling the brake system .....C 14
- Main brake cylinder
  - General .....C 17
  - Special base valve .....C 18
  - Removal .....C 19
Generator drive motor brake .....C 20
Measuring the brake deceleration .....C 21

Copyright protected. No part of this manual may be reproduced in any form. Copyright reserved.

https://truckmanualshub.com/

General

The brake system in this vehicle is a three-part system which consists of:

- an electro-magnetic brake (1) on the drive motor as a parking brake or emergency stop brake in the event that the electrical steering fails.
- a hydraulically/mechanically actuated internally acting brake (2) in the idling wheels as a service brake.
- a generator drive motor brake (3) with power recovery as a back-up for the internally acting service brake.

1/0169

Electro-magnetic brake

Id. no.: W8 424 589

Function:

When no current is supplied, the spring set (4) presses against the armature disk (5). This in turn presses against the brake disk (6), which is now pushed in between the mounting flange (7) and the armature disk and consequently blocks the drive = braked condition.

When the magnetic coil (8) is supplied with current, it becomes magnetic and pulls the armature disk (5) against the spring force. This releases the brake disk (6) and the motor can turn = unbraked condition.

The opening and closing action of the brake is controlled by the LAS-module (see sheet no. M__), depending on:

- the "parking brake" switch (12)

AND

- the "steering OK" signal from the steering logic (see sheet nos. B4+ B6)

The adjusting nut (9, see sheet no. C 6) can be used to adjust the braking moment, and the screws (10) together with the adjusting sleeves (11) can be used to adjust the brake clearance "X" (see sheet no. C5).

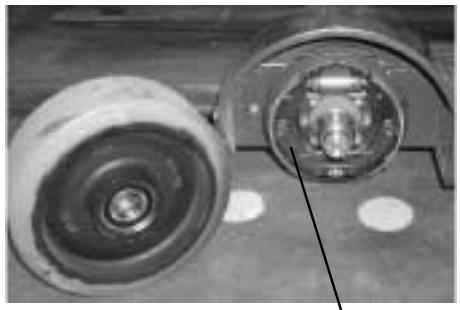

1/0170

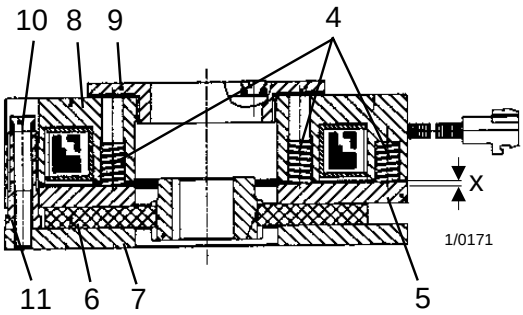

1/0171

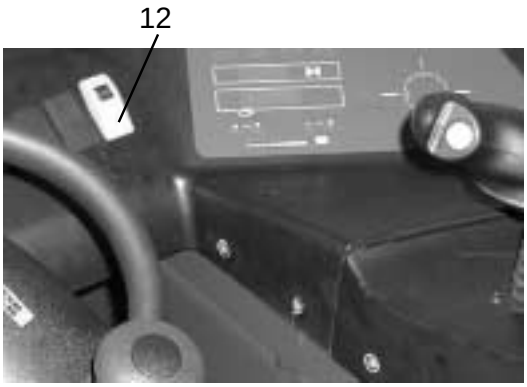

1/0172

Copyright protected. No part of this manual may be reproduced in any form. Copyright reserved.

https://truckmanualshub.com/

Electro-magnetic brake

Removal

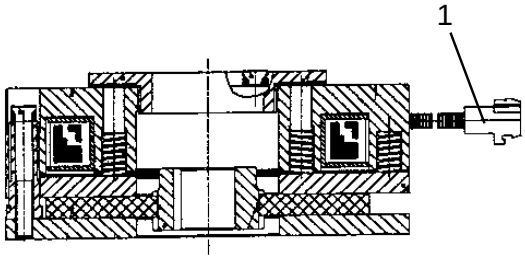

1/0171

Remark: When the brake unit is removed, the travel drive is unbraked. For this reason, secure the vehicle before removal, to prevent it from rolling away.

- Disconnect the electrical connection (1, connector X1) at the brake.
- Release the 3 hexagon socket screws (2) M8X22.
- Remove the complete brake unit.

1/0173

To install the brake unit, follow the instructions above in reverse order; tightening torque for the screws (2) : 23Nm.

Remark: Once the electromagnetic brake has been installed, the brake clearance must be checked and adjusted without fail (see sheet no. C6), and a function test must be carried out on the brakes.
The brake deceleration moment must also be checked (see sheet no. C21).

Copyright protected. No part of this manual may be reproduced in any form. Copyright reserved.

https://truckmanualshub.com/

Electro-magnetic brake

Changing the brake disk

Id. no.: W8 425 528

Note: While the brake disk is being changed, the vehicle is unbraked. For this reason, secure the vehicle before removal, to prevent it from rolling away.

The brake disk (4) must be replaced when it is so worn that adjustment of the clearance (up to approx. 0.45mm) with the adjusting sleeves (2) is no longer possible. The brake disk must also be replaced in the event of cracks or non-radial wear. In order to replace the brake disk, it is necessary in some cases to remove the electromagnetic brake.

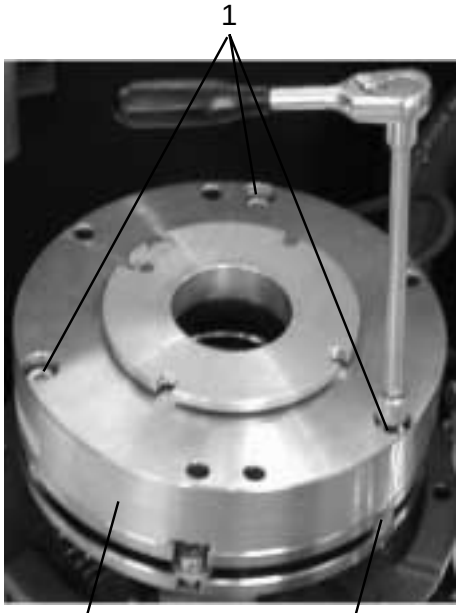

1/0174

- Release the 3 screws (1) M8X55 evenly. Ensure that the adjusting sleeves (2) do not turn as you do so.
- Release connector X1 for the brake and remove the magnetic coil (3).
- Pull the brake disk (4) up and off over the pinion (5).

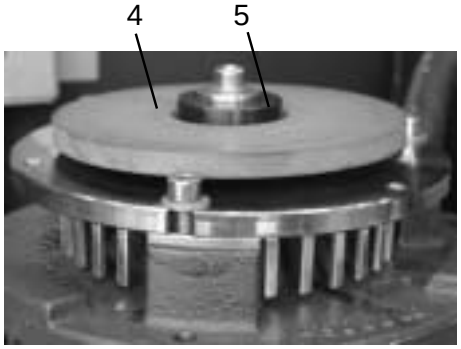

1/0175

Remark: The new brake disk must be pushed carefully over the pinion, so that the noise dampening o-ring (6) is not damaged or pushed out of its groove.

- Replace the magnetic coil (3) and tighten the screws (1) in several passes; tightening torque: 25Nm

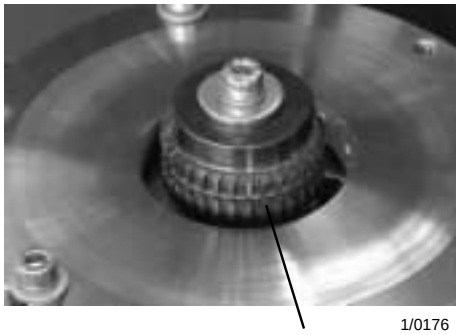

1/0176

Note: After the brake disk has been replaced, you must check the brake clearance without fail (see sheet no. C 5) and carry out a function check on the brake. The brake deceleration moment must also be checked (see sheet no. C 21).

Thickness of new brake disk: 8mm
Replace at residual thickness of: 6mm

Copyright protected. No part of this manual may be reproduced in any form. Copyright reserved.

https://truckmanualshub.com/

Electro-magnetic brake

Adjusting the brake clearance

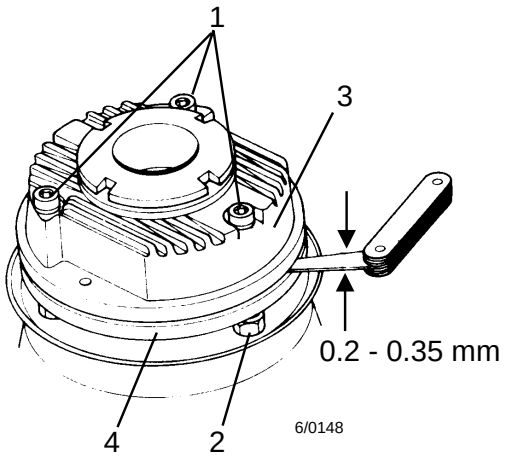

The electromagnetic brake does not have to be active in order to check the clearance.

- Loosen the 3 fastening screws (1). Do not remove them entirely.
- Turn the adjusting sleeves (2) in or out with an open ended spanner until a clearance of 0.2 - 0.35 mm is measured with a feeler gauge between the magnetic element (3) and the armature disk (4).
- Check the clearance at three points close to the screws.
- Tighten the fastening screws (1) again and check the clearance again. Readjust if necessary.

Copyright protected. No part of this manual may be reproduced in any form. Copyright reserved.

https://truckmanualshub.com/

Electro-magnetic brake

Adjusting the braking moment

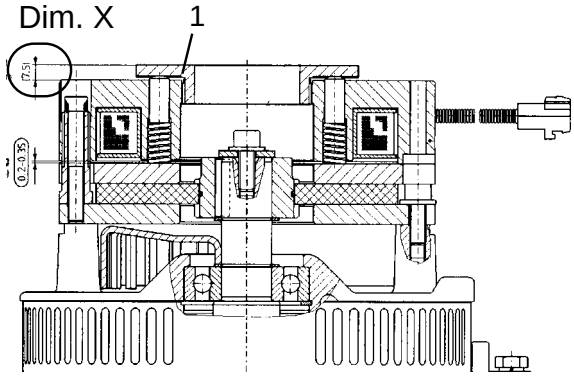

1/0184

The braking moment can be adjusted with the adjusting nut (1). The nut can be adjusted in steps of 90°.

Turning the nut in an anti-clockwise direction reduces the spring force and consequently the braking moment.

Remark: The adjusting screw is pre-set in the factory to the dimension X = 7.5 mm. The required braking moment is achieved with this setting (see sheet no. C 21).

Releasing the brake mechanically

The brake must be released mechanically when:

- The brake coil or a component which is essential for releasing the brake is faulty and the vehicle has to be moved.
- The vehicle chassis has to be moved during commissioning of the vehicle.

For this purpose, two M8X60 screws (2) must be screwed in, so that the armature plate is pulled directly to the body of the magnet and the brake disk is freed.

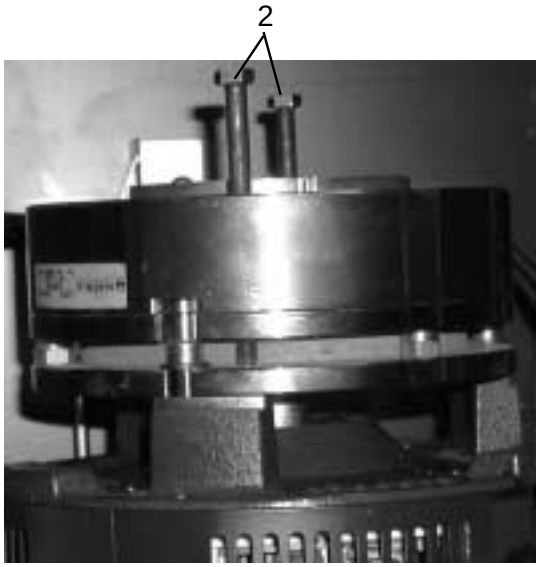

1/0197

Note: The two screws must be removed again before the vehicle is put into operation!

Copyright protected. No part of this manual may be reproduced in any form. Copyright reserved.

https://truckmanualshub.com/

Electro-magnetic brake

Checking the brake coil

If the LAS-module detects an error in the area used for selection of the electromagnetic brake, the error code "FE 65" appears on the display and travel is blocked (see sheet no. MXX).

A resistance measurement must be taken to check the brake coil.

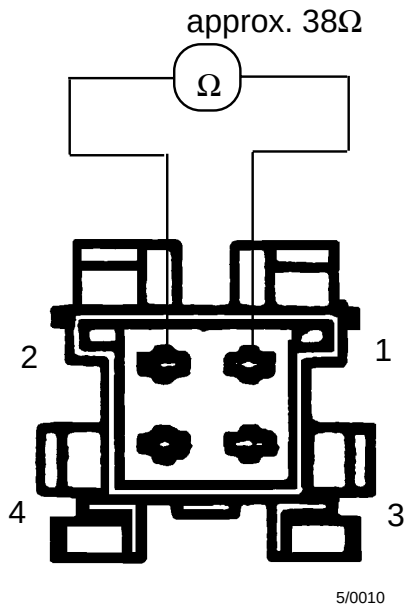

Connector X1 at the brake:

Pin 1 + 2 approx. 38Ω

Technical data for the brake coil:

Model:	1EB60-20
Rated voltage:	48V
Holding voltage:	approx. 29V
Output:	62W
I_{Nom}:	approx. 1.2A
I_{Hold}:	approx. 0.8A

Copyright protected. No part of this manual may be reproduced in any form. Copyright reserved.

https://truckmanualshub.com/

Hydraulic/mechanical brake

Id. no.: W8 415 893

Function

This brake system is a positive-acting system, i.e. a braking operation is initiated by a build-up of pressure. The two load wheels (1) are braked.

When the foot brake is actuated, the wheel brake cylinders (2) are placed under pressure by the main brake cylinder and consequently press the brake shoes (3) against the inside of the load wheel rims.

When the foot brake is released, the brake shoes are returned to their home position by tension springs (4).

Remark: When the foot brake is actuated, a switch is actuated at the same time, which also initiates a generator braking operation.

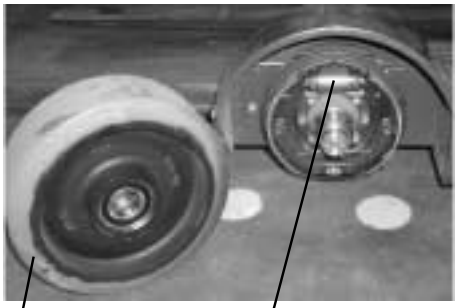

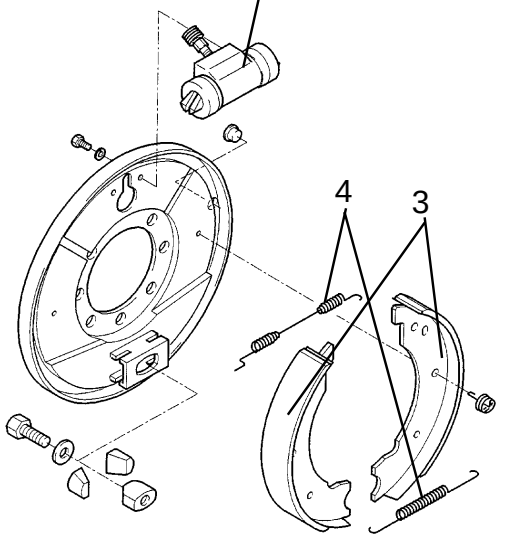

Copyright protected. No part of this manual may be reproduced in any form. Copyright reserved.

https://truckmanualshub.com/

Hydraulic/mechanical brake

Plan of the hydraulic braking system

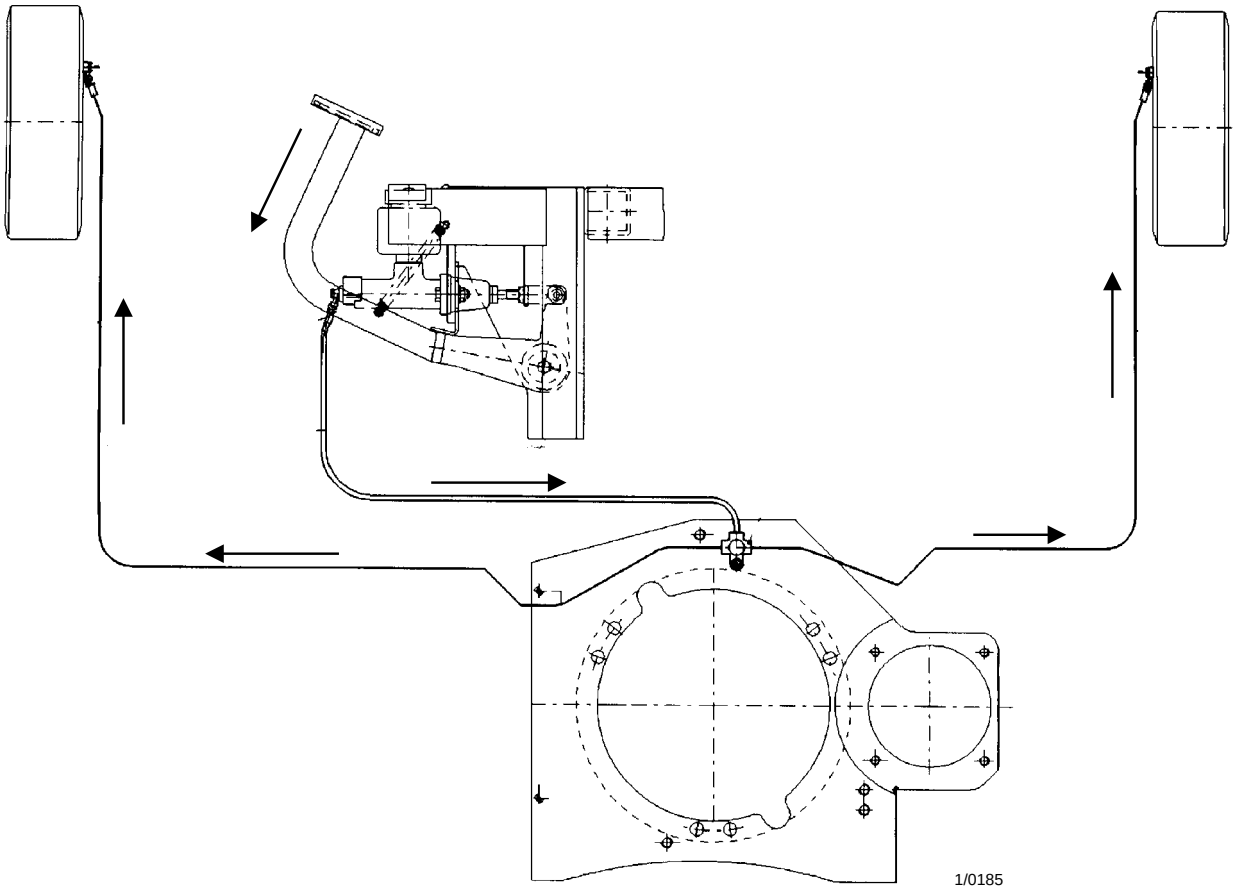

Copyright protected. No part of this manual may be reproduced in any form. Copyright reserved.

https://truckmanualshub.com/

Hydraulic/mechanical brake

Removal

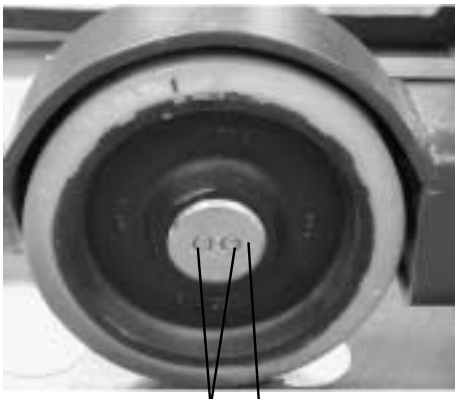

1/0177

Note: When the brake unit is removed, the load wheel in question is unbraked. For this reason, secure the vehicle before removal, to prevent it from rolling away.

- Jack up the load wheel.
- Release the 2 screws M8X16 (1) and remove the cover disk (2).
- Pull the load wheel (3) off the axle (4).
- Remove the slide carriage covers (5).
- Remove the brake lead (6).

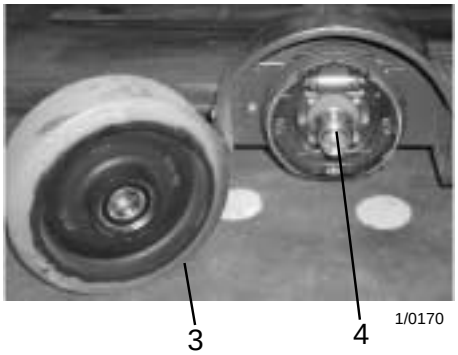

1/0170

Note: Brake fluid leaks out during this process! Use cleaning cloths or something similar to prevent the area being soiled.

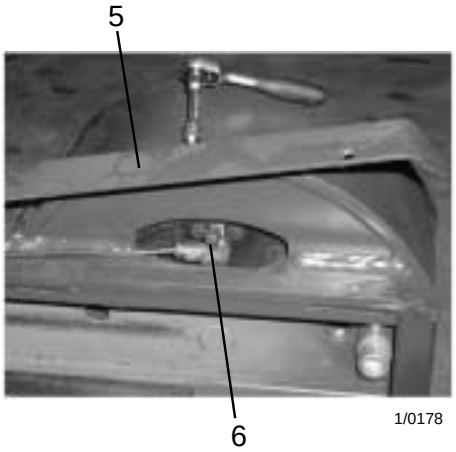

1/0178

- Release the 7 screws M10X12 (7).
- Pull the entire brake plate (8) off over the axle (9).

To install the brake unit, follow the instructions above in reverse order. Tightening torque for the 7 x M10 screws : 46 Nm. Secure with Loctite.

Tightening torque for the 2 x M8 screws : 23 Nm.

After this process, check the function of the brake and bleed all air out of the brake system (see sheet no. C 15). Check the brake clearance and readjust if necessary (see sheet no. C 11).

The brake deceleration moment must also be checked (see sheet no. C 21).

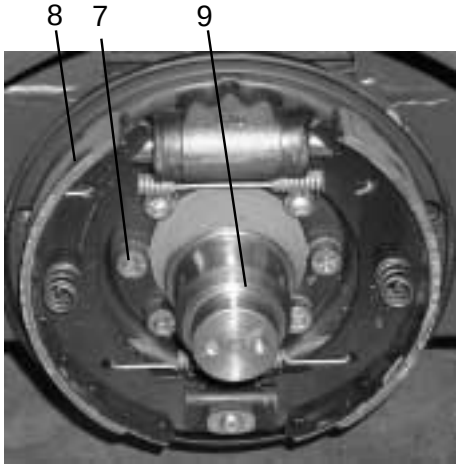

1/0179

Copyright protected. No part of this manual may be reproduced in any form. Copyright reserved.

https://truckmanualshub.com/

Hydraulic/mechanical brake

Adjusting the brake clearance

Note: The brake deceleration values must be checked once a year and after all adjustments/repairs made to the brake system (see sheet no. C21).

Checking the brake linings for the brake lining thickness:

There are openings made in the brake plate and the slide carriage guide (1) which are designed for visual inspection of the brake linings. If there is only a residual thickness of about 2 mm visible, the brake shoes must be replced.

Id. no. Brake shoe: **W8 416 718**

Adjusting the brakes:

The inner shoe brake has a central adjustment feature for the clearance and enveloping circle. In this adjusting process, a wedge (2) is drawn between the contact points of the brake shoes, which causes the enveloping circle to change. As a result, ideal utilisation of the brake linings is achieved, while at the same time, the leverage for initiation of the braking force is improved. After every new adjustment of this brake wedge, the brake shoes must be re-centred by braking several times.

Adjustment:

Turning the adjusting hexagon (2) to the right pulls the wedge up, in other words expands the enveloping circle and results in adjustment of the brake linings.
Turning to the left decreases the enveloping circle.
The brake clearance is 0.3 - 0.5 mm.

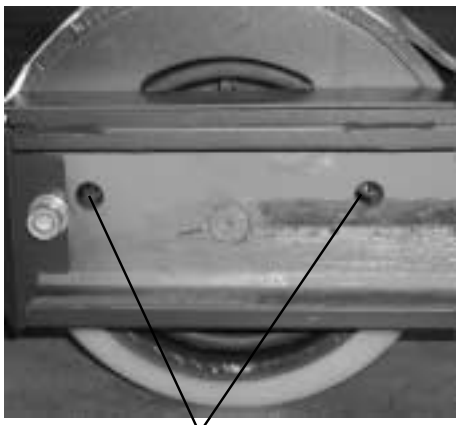

1/0180

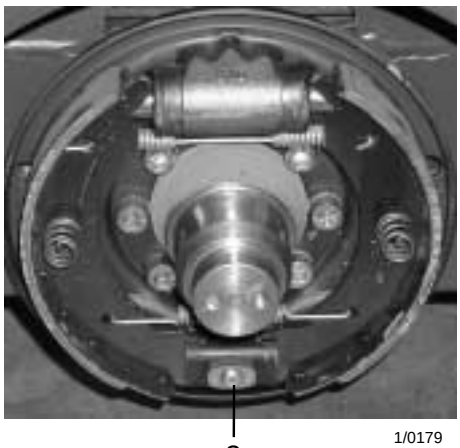

1/0179

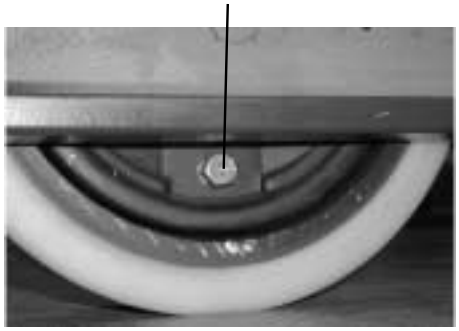

1/0181

Copyright protected. No part of this manual may be reproduced in any form. Copyright reserved.

https://truckmanualshub.com/

Hydraulic/mechanical brake

Adjusting the brake pedal

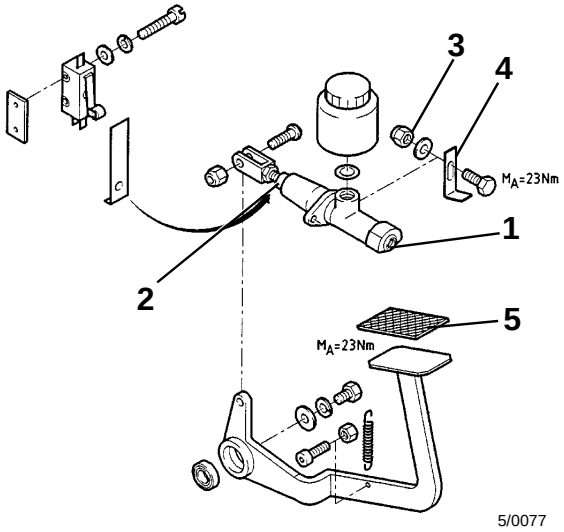

5/0077

The brake pedal must be adjusted when:

- The main brake cylinder (1) has been replaced,
- The piston rod clearance ("snifter clearance") (2) is not correct,
- Components in the brake pedal assembly have been replaced.

Note: Since an optimum braking effect cannot be achieved during adjusting work on the brake pedal, the vehicle must be secured to prevent it from rolling away.

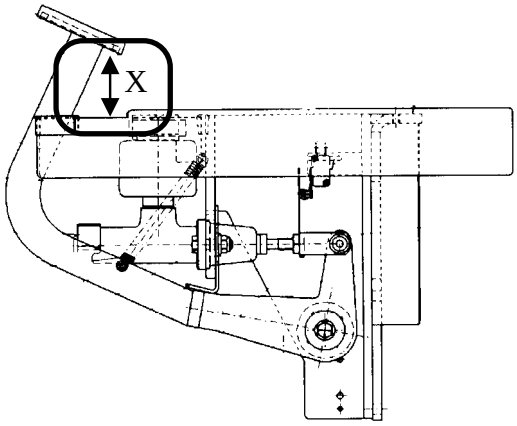

1/0186

- Slightly loosen the nut (3) of the stopper for the brake pedal movement distance.
- Move the stopper (4) along the slot until there is a measurement X of approx. 62 mm at the brake, between the lower edge of the pedal and the mounting plate of the accelerator pedal. The meauurement must be taken without the rubber pedal cover (5).
- Tighten the nut (3).
- Loosen the nut (7) and turn the threaded rod (6) so that there is a clearance of 1 mm between the piston and piston rod of the main brake cylinder. Tighten the nut again.
  This "snifter clearance" is not visible, since the protective cap covers the end of the piston rod. It can, however, be felt easily, by pressing the brake pedal slowly downwards by hand out of its home position. When the piston rod has moved a distance of 1 mm, you should feel a slight resistance which is caused by the piston rod and the piston coming into contact with each other.

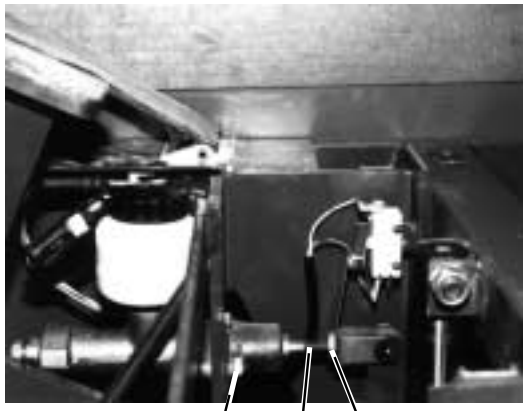

5-03 26

Copyright protected. No part of this manual may be reproduced in any form. Copyright reserved.

https://truckmanualshub.com/

Hydraulic/mechanical brake

Adjusting the brake pedal

- Bend the actuating plate (1) of the foot brake by hand, so that when the brake pedal is not actuated, the switch is actuated and the switch is freed when the pedal is tapped lightly.

  This is indicated by a quiet "clicking" noise made by the switch.

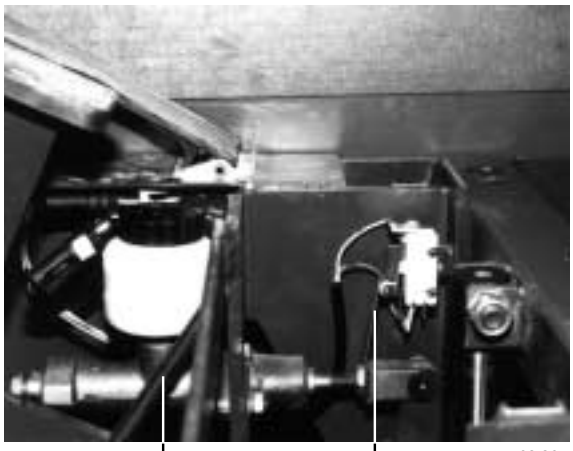

The return force of the pedal is determined unalterably by the tension spring (2).
No adjustment can be made here.

If necessary, the spring must be replaced (Id. no. W8 010 089) and a check carried out to ensure that the mechanical elements run smoothly.

Copyright protected. No part of this manual may be reproduced in any form. Copyright reserved.

https://truckmanualshub.com/

Hydraulic/mechanical brake

Bleeding / filling the brake system

Caution: When handling brake fluid, ensure that the aggressive fluid does not come into contact with the eyes, skin, clothing or parts of the fork-lift truck. If you get brake fluid in your eyes or on your skin, rinse out with lots of clear water or off the skin with soap.

Never mix brake fluid with mineral oil or dispose of it together with mineral oil!

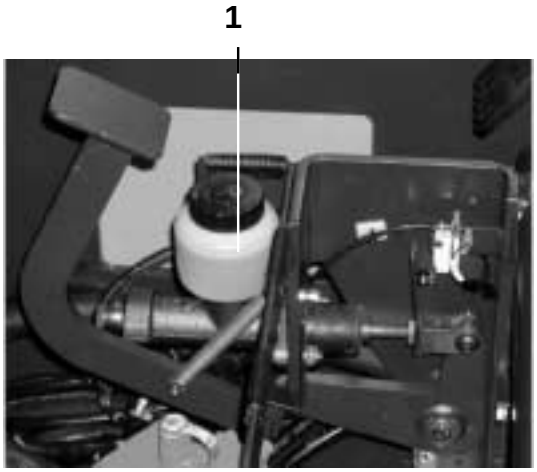

1/0182

Filling the brake system

Brake fluid is hygroscopic, i.e. it absorbs moisture from the air. For this reason, we recommend replacing the brake fluid at least once a year.
When filling and bleeding air out of new brake systems or after maintenance, any brake fluid which has overflowed must not be used for filling the system.

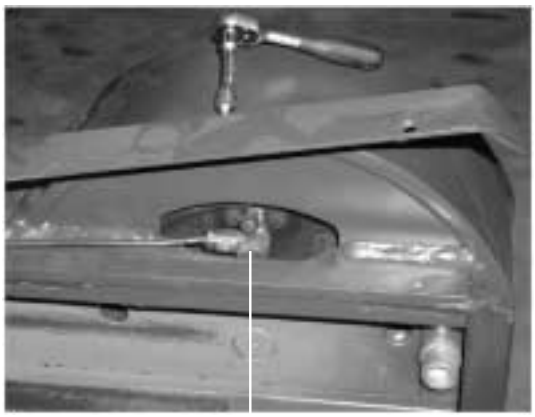

1/0178

- Fill the storage tank (1) with brake fluid.
- Remove the dust cap from the bleeder valve (2), push on a well-fitting hose and hang the other end of the hose in an open glass container that is postioned higher than the first end.

Remark: Wind a cloth or something similar around the bleeder valve so that no brake fluid can escape into the brake!

- Open the bleeder valve by a quarter or half turn.
- "Pump" the brake pedal until brake fluid emerges from the hose. If necessary, top up the storage tank with more brake fluid.
- Close the bleeder valve.
- Carry out the same procedure on the 2nd load wheel.

Copyright protected. No part of this manual may be reproduced in any form. Copyright reserved.

https://truckmanualshub.com/

Hydraulic/mechanical brake

Bleeding / filling the brake system

Bleeding the brake system

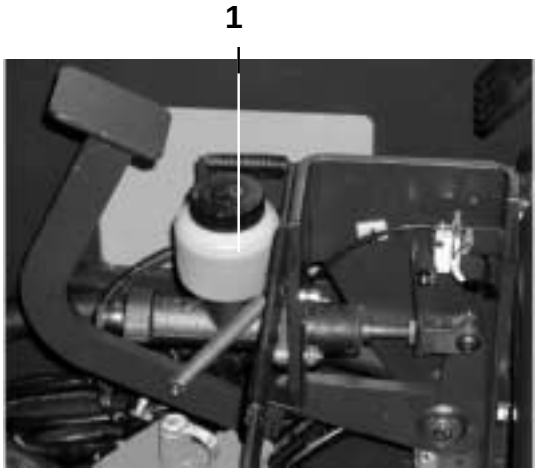

1/0182

If good braking results are not achieved until the pedal has been pressed several times or if the system has been refilled with brake fluid, the brake system must be bled of air.

If you have an "Ate filling and bleeding device" available, follow the instructions for use provided by Teves, the manufacturer.

If a device of this kind is not available, the brake system mus be bled as follows. Two people are needed for this work.

- Empty the storage tank (1) and fill it with new brake fluid.
- Remove the dust cap from the bleeder valve (2), push on a well-fitting hose and hang the other end of the hose in an open glass container that is postioned higher than the first end.
- One person presses the brake pedal down as far as it goes and holds it in this position.

Caution: Ensure that the bleeder hose cannot slip out of place. Cover the glass with a cleaning cloth to catch any splashes.

1/0178

Copyright protected. No part of this manual may be reproduced in any form. Copyright reserved.

https://truckmanualshub.com/

Hydraulic/mechanical brake

Bleeding / filling the brake system

Bleeding the brake system

- The second person opens the bleeder valve (1) by a quarter or a half turn.
- Brake fluid should emerge due to the pressure exerted by the brake pedal.
- Close the bleeder valve again immediately.
- Release the brake pedal so it returns to its home position.

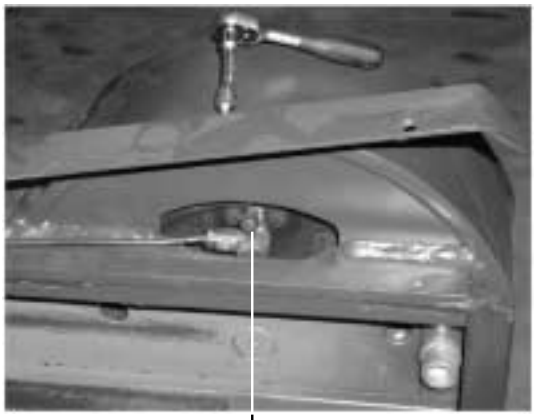

1/0178

Repeat this process between 4 and 7 times until only bubble-free, clear brake fluid emerges into the glass container.
If the oil level in the compensation container drops significantly during this process, the system must be topped up with new "Ate brake fluid".

Do not reuse brake fluid that has come out of the system.
Repeat the entire process with the 2nd load wheel.

Remark: The individual cylinders must be bled one after the other. You should start with the brake cylinder that is furthest away from the main cylinder. If it is often found that there is air in the brake system or if the brake cylinders lose brake fluid, the affected brake cylinder must be replaced.

Copyright protected. No part of this manual may be reproduced in any form. Copyright reserved.

https://truckmanualshub.com/

Hydraulic/mechanical brake

Main brake cylinder

Id. no. W8 415 954

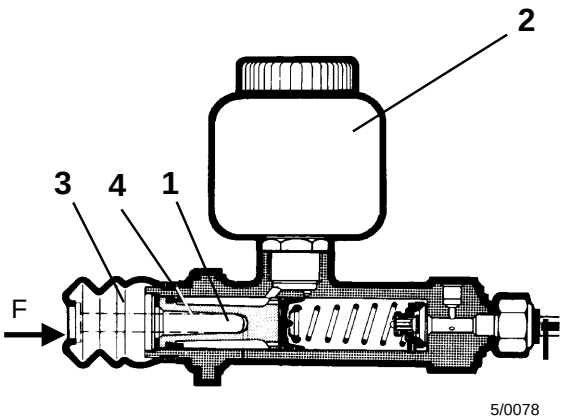

The main brake cylinder is located under the pedal for the foot brake in the underfloor compartment, and is connected to the brake pedal by a turning mechanism. The main brake cylinder initiates and controls the entire braking operation, because when the brake pedal is pressed, the main brake cylinder piston (1) presses the brake fluid in the brake system into the wheel cylinders.

The compensation tank (2) is mounted directly on the main cylinder and must always be filled with brake fluid up to about 15 - 20 mm below the edge of the lid.

Compensation tank: **Id. no. W8 415 955**
Copper sealing ring: **Id. no. W8 006 209**

Remark: Only use original brake fluid! Do not add any mineral oil! The brake fluid should be replaced once a year.

The main brake cylinder has a protective cap (3) which prevents dust and water penetrating the cylinder. The protective cap is fitted with an air hole so that the air contained in the protective cap can escape when the main brake cylinder is actuated.

The protective cap must be mounted so that the air hole is at the bottom. If the protective cap is installed so that the air hole is at the top, water may collect in the protective cap, which can penetrate into the main cylinder when the brake is applied.

The consequences of this are:

- Formation of rust at the main brake cylinder hole, which can cause damage to the secondary ring (4) and result in loss of brake fluid.

- The main brake cylinder can freeze solid at minus temperatures.

Copyright protected. No part of this manual may be reproduced in any form. Copyright reserved.

https://truckmanualshub.com/

Hydraulic/mechanical brake

Main brake cylinder

If there are leaks at or in the main brake cylinder or in the event of other damage, the entire main brake cylinder must always be replaced, since special tools and expertise are required for repair work!

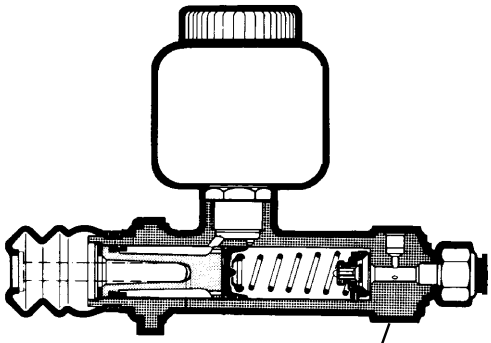

Fig. 1 5/0078

Special base valve

So that the pressure is released fully to 0 bar when the brakes are released, the main brake cylinder is fitted with a "special base valve" (1).
Due to this feature, the brakes can be released fully, in connection with the "snifter clearance" of 1mm (see sheet no. C12).

Unlike the normal floor valve, the special base valve has a throttling hole "D" (Fig. 2).

On the one hand, the throttling hole makes it possible for excess pressure to be fully released, and on the other it guarantees that when the pedal is pressed repeatedly very fast, brake fluid can be "pumped" into the system of hoses by the main brake cylinder piston; for example when the brake system is being filled and bled if there is no filling and bleeder device available.

In order to avoid confusion between the main brake cylinder with a special base valve and other main brake cylinders, the former is marked with a metal or adhesive strip with the words "Cylinder has special base valve".

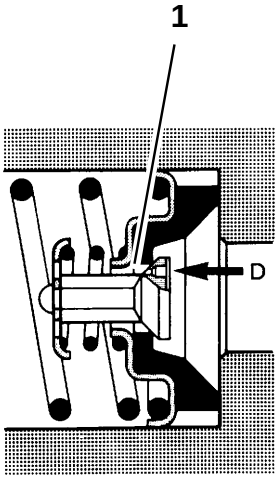

Fig. 2 5/0079

Copyright protected. No part of this manual may be reproduced in any form. Copyright reserved.

https://truckmanualshub.com/

Hydraulic/mechanical brake

Main brake cylinder

Removal

Note: Secure the vehicle to prevent it from rolling away, since the brake system is not fully functional during this work!

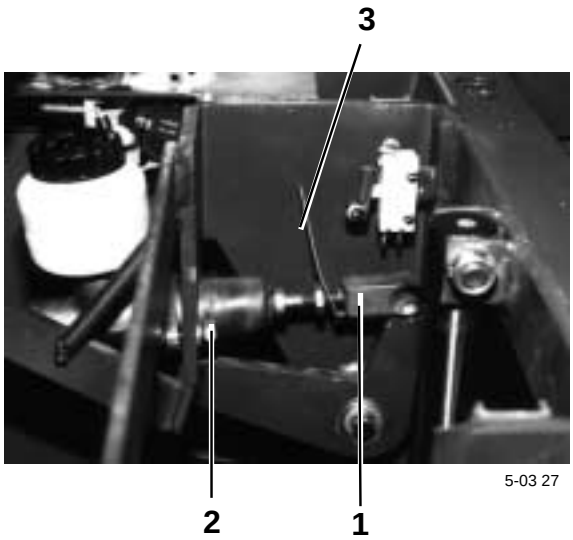

- Release the lock nut on the fork head (1) and push out the fastening screw.
- Release the two fastening screws (2) and tilt the main brake cylinder over.
- Dismantle the fork head and actuating plate (3) of the foot brake pedal.
- Remove the two fastening screws (2) and the stopper.
- Pull out the main brake cylinder and lay it to one side.

Remark: The main brake cylinder must be laid down with the storage tank upwards, otherwise brake fluid will run out of the ventilation hole.

- Remove the brake hose.

To **install** the main cylinder, follow the instructions above in reverse order.

After this process, all air must be bled out of the brake system, the brake pedal set correctly and the brake clearance and the brake deceleration value checked (see sheet no. C 21).

Copyright protected. No part of this manual may be reproduced in any form. Copyright reserved.

https://truckmanualshub.com/

Generator drive motor brake

As well as the electro-magnetic brake and the hydraulic/mechanical service brake, the FM has a generator brake.

This can be applied in 3 different ways and its parameters set separately in the travel and pump controller (FPS):

- By releasing the deadman switch (1) with t_{delay} = 2secs.
  Relevant parameter in the FPS : "Release brake"
- By releasing travel transducer (2, micro-switch).
  Relevant parameter in the FPS: "Release brake"
- By tapping the brake pedal (3, micro-switch).
  Relevant parameter in the FPS: "Pedal brake"

"Reversing" (switching over the travel direction during travel) is also a form of generator braking and can be adjusted with the parameter "Invers braking" in the FPS.
For information on the principle of generator braking, see sheet no. M20.
For information on setting the parameters for generator braking, see sheet nos. V46-48.

1/0183

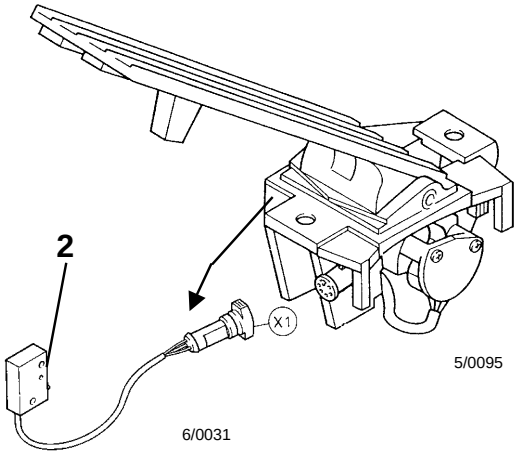

5/0095

6/0031

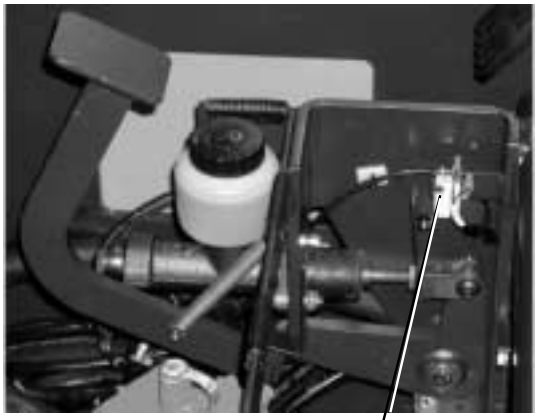

1/0182

Copyright protected. No part of this manual may be reproduced in any form. Copyright reserved.

https://truckmanualshub.com/

Measuring the brake deceleration

General

The brake deceleration value is measured with the dynometer (Fig. 1), Id. no. W8 050 605.

This works on the principle of the pendulum, which registers irregular movements with great precision.

During travel at a steady speed over an even surface, the pendulum always hangs vertically and shows zero on the dial (Fig. 2). On acceleration, the pointer deflects to the right (clockwise) and on braking (deceleration), it moves to the left.

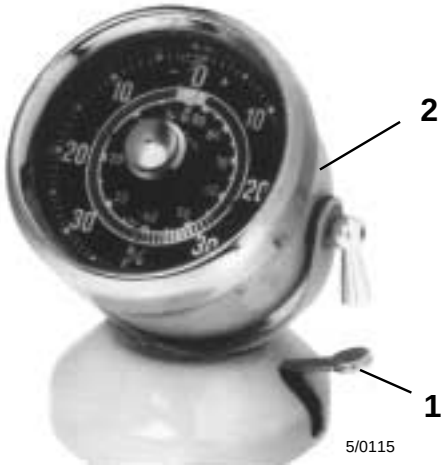

Fig. 1

Preparations for measurement

Moisten the rubber sucker on the underside of the measuring instrument (ideally with glycerin), then use the lever (1) to fasten the dynometer onto a horizontal surface.

The dial must face towards the driver's seat and be mounted in the direction of travel.

Before every deceleration measurement, the measuring case (2) must be tipped to move the measuring pointer to zero. The dynometer has been set to the correct zero position by tipping the case when the measuring pointer can move almost a full turn to the the left (anti-clockwise) from zero and almost half a turn to the right.

The maximum pointer (3) must be reset manually, by turning the knob at the centre of the dial (4) clockwise, until the pointer is set as closely as possible to zero.

During the braking process, the maximum pointer moves to the maximum deflection point together with the measuring pointer and remains there when the other moves back (Fig. 3).

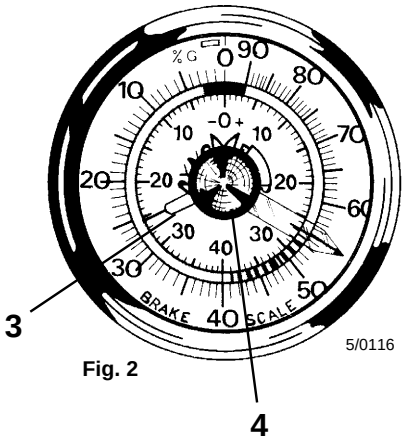

Fig. 2

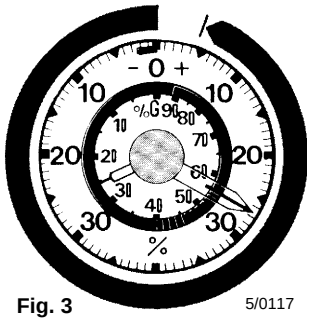

Fig. 3

Deceleration in %

Copyright protected. No part of this manual may be reproduced in any form. Copyright reserved.

https://truckmanualshub.com/

Measuring the brake deceleration

Evaluating the measurement

- Calculate the maximum vehicle speed (V = distance/time).
- Accelerate the vehicle to $V_{max.}$ in the direction of the load (reverse).
- Stop the vehicle with full force by depressing the brake or actuate the switch for the parking brake (electromagnetic brake closes). Read the braking deceleration value "F" in % off the dynometer (i.e. the maximum pointer reading).
- The following values are required:

Example v = 10 km/h

With rated load

F = 1.86 x V
F = 1.86 x 10 km/h
F =18 %

Copyright protected. No part of this manual may be reproduced in any form. Copyright reserved.

https://truckmanualshub.com/

Contents

Sheet no.

Guide to components (basic equipment**)**.....M 3
Guide to components (optional extras**)**.....M 5
Block diagram.....M 7

Travel and pump controller (FPS)
- General.....M 8
- Guide to components .....M 10
- Main current connections .....M 11
- Control current connections.....M 12
- Guide to wiring.....M 13
- Logic board and main current circuits.....M 14
- DC/DC converter .....M 16
- Control of the drive motor .....M 17
- Functional principle of the main current circuits for travel .....M 18
- Functional principle of the main current circuits for generator braking .....M 20
- Functional principle of the main current circuits for the hydraulics .....M 21
- Safety circuit
  - General.....M 22
  - Roll-away monitor.....M 23
  - Errorcode specification .....M 24

Copyright protected. No part of this manual may be reproduced in any form. Copyright reserved.

https://truckmanualshub.com/

Guide to components (Basic equipment)

		Id. no.
1A10	Travel and pump controller	**W8 409 671 AT**
	LAS module	**W8 409 734 AT**
1M1	Drive motor	**W8 409 661**
1S3	Parking brake switch	**W8 409 014**
1S12	Brake switch	**W8 408 080**
1S25	Deadman switch	**W8 005 278**
1S28	Switch for creep speed	**W8 409 013**
1S44	Button for travel direction	**W8 409 010**
1U20	Travel setpoint	**W8 415 984**
1Y44	Magnetic brake	**W8 424 589**
2A20	Joystick	**W8 409 258**
2M1	Pump motor	**W8 409 304**
2R9	Setpoint for lifting/lowering	**W8 409 324**
2R11	Setpoint for side shifting	**W8 409 324**
2R12	Setpoint for tilting	**W8 409 324**
2Y2	Prop. valve for lowering	**W8 425 731**
2Y20	Valve for lifting	**W8 425 731**
2Y54	Prop. valve for s. shifting DE	**W8 425 732**
2Y55	Prop. valve for s. shifting LE	**W8 425 732**
3M1	Steering motor/controller	**W8 424 045**
3R10	Actual value for steering	**W8 408 841**
3R11	Setpoint for steering	**W8 408 841**
3U12	DC/DC converter for steering	**W8 409 493**
4K1	Relay for horn	**W8 014 372**
4S1	Button for horn	**W8 409 011**
8A5	Display	**W8 409 214**
9M5	Pump motor fan	**W8 405 965**
S1	Key switch	**W8 014 175**
S2	Emergency-stop switch	**W8 405 281**
X54	Connector for trailing cable	
X55	Connector for trailing cable	
X99	Diagnosis connector	**W8 004 343**

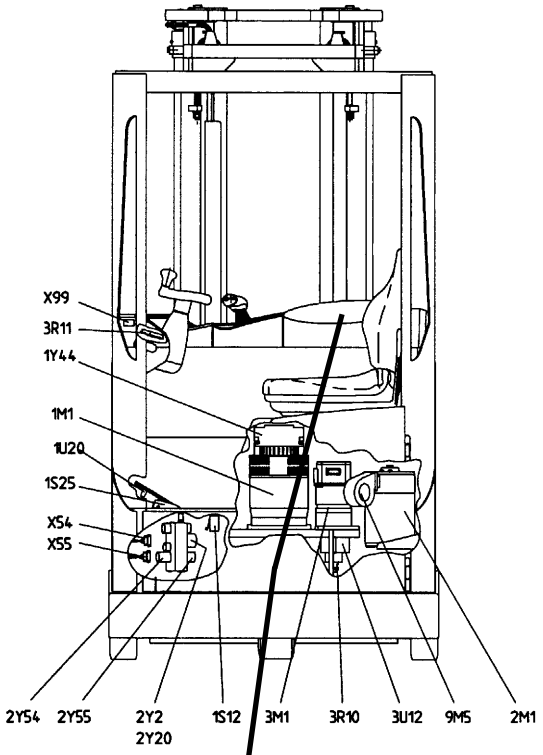

1/0241

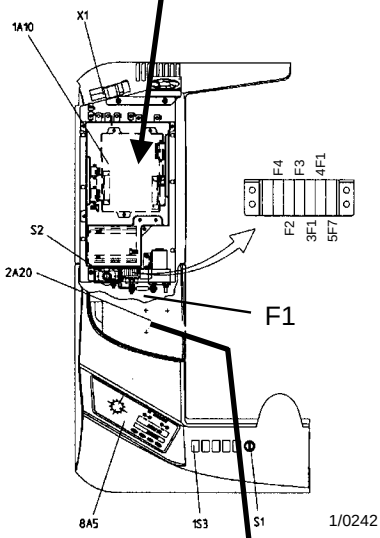

1/0242

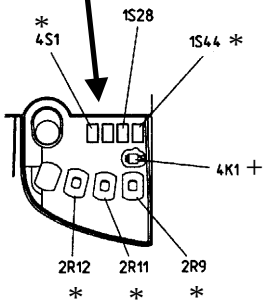

1/0243

* only with 4-lever, otherwise in joystick

\+ only with joystick

Fuses

F1	Main current fuse	250 A	**W8 401 067**
F2	Key switch	10 A	**W8 402 857**
F3	DC/DC converter, FPS	10 A	**W8 402 857**
F4	LAS module 48V	10 A	**W8 402 857**
3F1	Steering	20 A	**W8 403 428**
4F1	Heating (optional)	10 A	**W8 402 857**
5F7	Reserve (48V, X8.4)	10 A	**W8 402 857**

Copyright protected. No part of this manual may be reproduced in any form. Copyright reserved.

https://truckmanualshub.com/

Guide to components
(Basic equipment)

		Id. Nr.
1S27	Battery lock switch	**W8 408 080**
2B38	Shift damping switch, DE	**W8 405 321**
2B39	Shift damping switch, LE	**W8 405 321**
2Y58	Valve for tilting, DE	**W8 425 736**
2Y59	Valve for tilting, LE	**W8 425 736**
4H1	Horn	**W8 407 201**
X56	Connector for trailing cable, shift carriage	
X60	Connector for trailing cable, shift carriage	

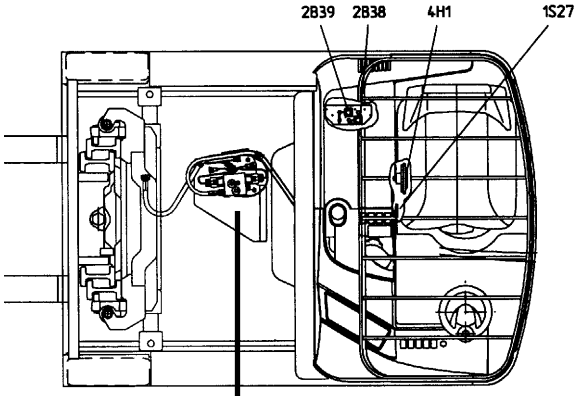

1/0245

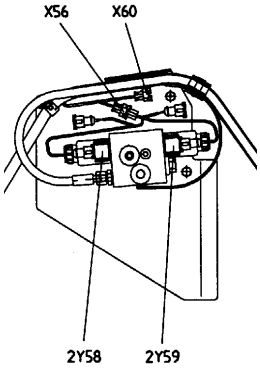

1/0244

Copyright protected. No part of this manual may be reproduced in any form. Copyright reserved.

https://truckmanualshub.com/

Guide to components (optional extras)

		Id. no.
2R13	Setpoint for transverse shift	**W8 409 324**
2S3	Button for additional hydr. 1	**W8 409 255**
2S4	Button for additional hydr. 2	**W8 409 255**
2S26	Release button - intermediate lift cutout	**W8 409 251**
2S68	Release button - lowering cutout	**W8 409 251**
4K5	Relay, flashing warning light	**W8 014 372**
5E3	Tail light RHS	**W8 011 437**
5E4	Tail light LHS	**W8 011 437**
5S1	Light switch	**W8 409 254**
5S20	Switch for working lights	**W8 409 253**
7M20	Seat adjustment motor	**W8 423 158**
7S24	Seat position button	**W8 409 012**
8A5	Height indicator (part of display)	**see M3**
8B21	Incremental encoder, lifting	**W8 424 072**
X90	Connector for optional extras	

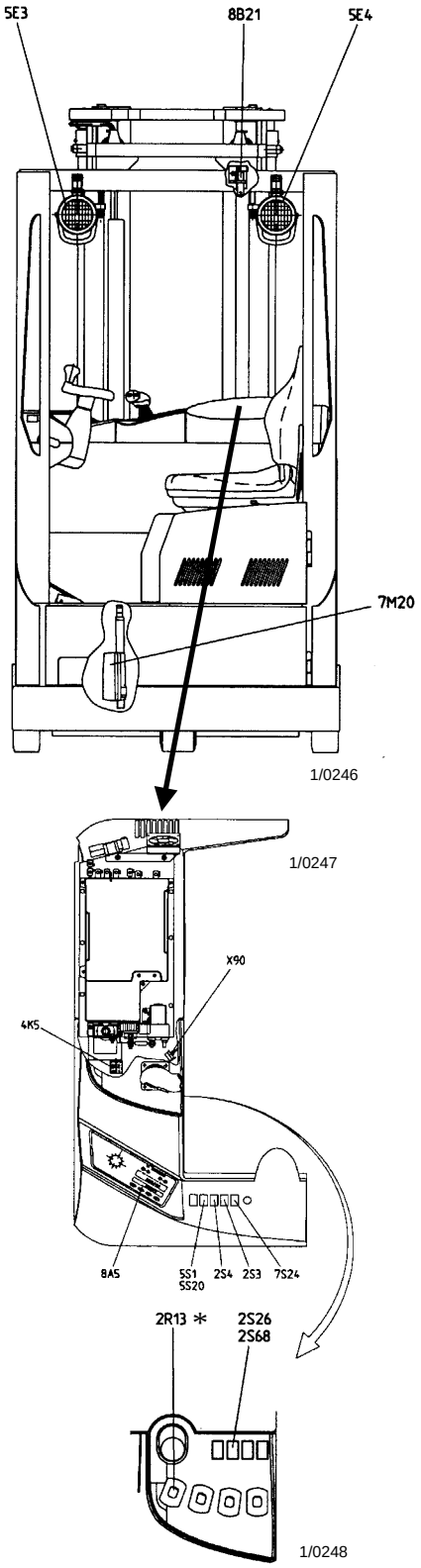

* only with 4-lever, otherwise in joystick

Copyright protected. No part of this manual may be reproduced in any form. Copyright reserved.

https://truckmanualshub.com/

Guide to components (optional extras)

		Id. no.
2B44 (2S6)	Pos. switch, lift cutout	**W8 405 321**
2B46 (2S5)	Pos. switch, intermediate lift cutout	**W8 405 321**
2B65 (2S65)	Pos. switch, s.shift/lowering lock 0.4m	**W8 405 321**
2B66 (2S66)	Pos. switch, front shift	**W8 405 321**
2Y52	Valve for transverse shift, LHS	**W8 425 736**
2Y53	Valve for transverse shift, RHS	**W8 425 736**
2Y56	Valve for add. hydr.1, LHS	**W8 424 581**
2Y57	Valve for add. hydr.1, RHS	**(compl. block)**
2Y60	Valve for add. hydr. 2, LHS	**W8 424 582**
2Y61	Valve for add. hydr. 2, RHS	**(compl. block)**
5E2	Headlamp left	**W8 012 643**
5E9	Flashing warning light	**W8 013 159**
5E31	Working light, RHS	**W8 400 354**
5E32	Working light, LHS	**W8 400 354**
8B20	Reference, main lift	**W8 405 321**
A51	Monitor for camera system	**System-**
A54	Camera	**related**

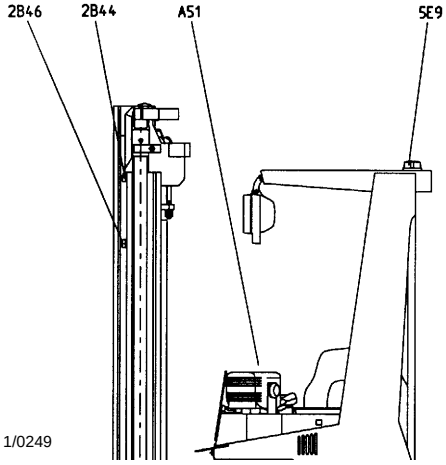

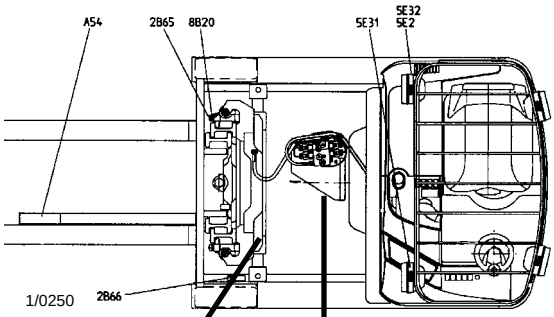

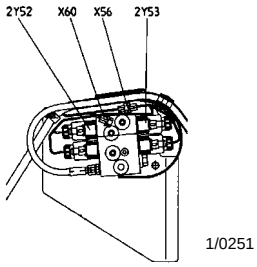

Transv. shift option

2Y56/57 2Y60/61 2Y56/57

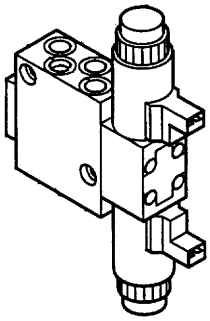

Single

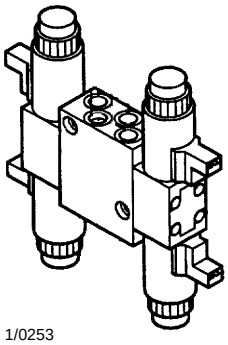

Double

Additional hydraulics

Copyright protected. No part of this manual may be reproduced in any form. Copyright reserved.

https://truckmanualshub.com/
Copyright protected. No part of this manual may be reproduced in any form. Copyright reserved.

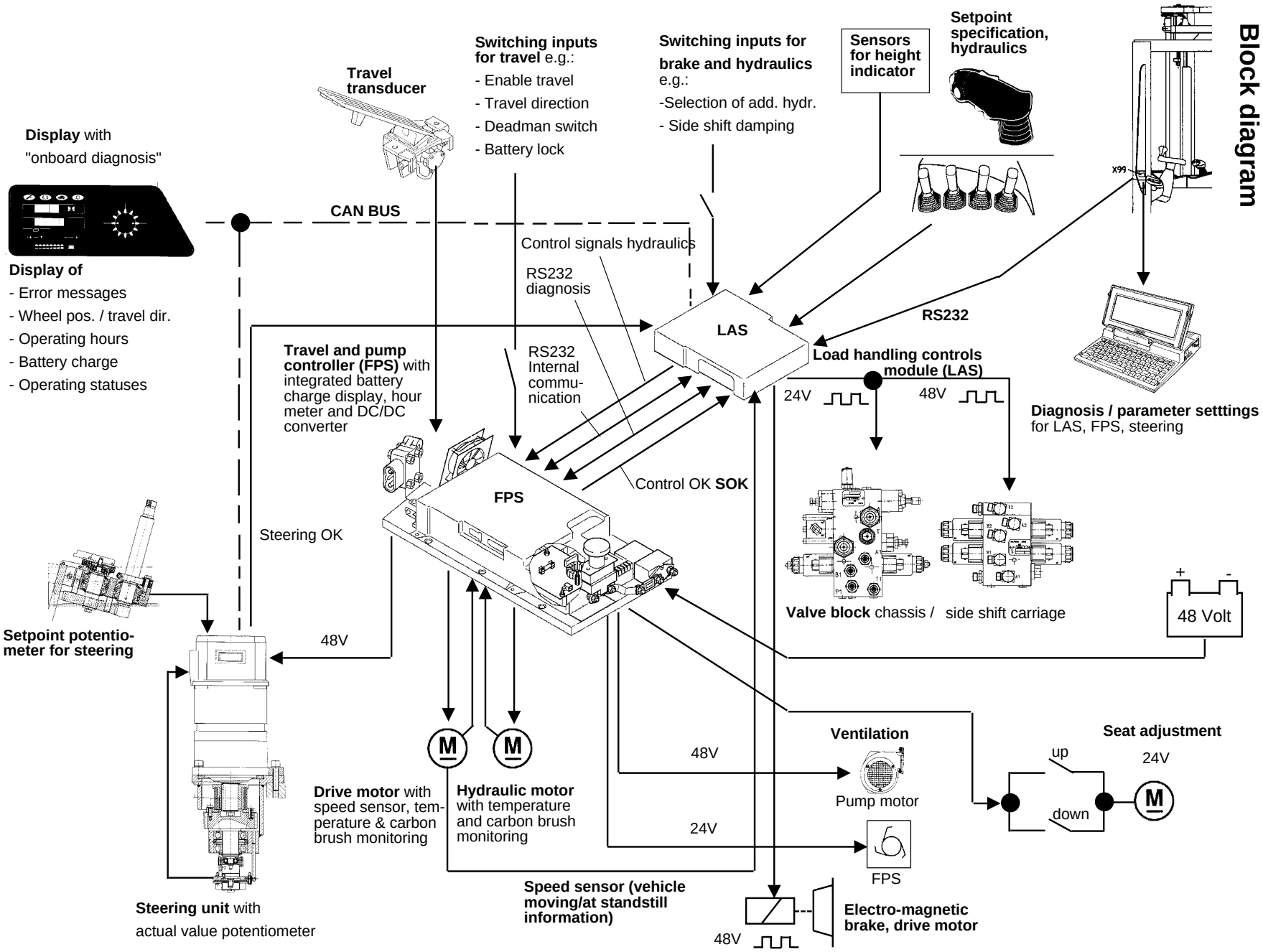

https://truckmanualshub.com/

Travel and pump controller (FPS)

Id. no. W8 409 213
Id. no. W8 409 671 (AT)

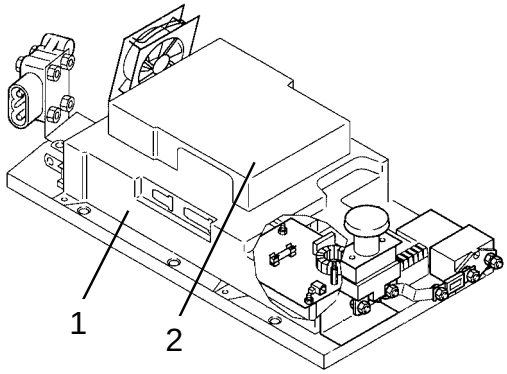

1/0041

General

The FPS (1) is a combined travel and pump control system. Its purpose is to control a shunt motor (for travel) and a series motor (for the hydraulic system).
The motors are timed with amplifiers via a microprocessor-controlled logic board.
The load handling controls module (LAS module) (2) is responsible for evaluating and passing on the hydraulics signals and for evaluating various other signals (height indicator, magnetic brake, CAN bus, see sheet no. M__).
The main current circuits are constructed using MOSFET technology and are timed at a frequency of 16 kHz. The voltage is controlled according to the principle of pulse width modulation (PWM).

When the motor is braked with the generator brake, power is fed back into the battery (deadman switch released, accelerator pedal enabled, slight actuation of the brake pedal).
Travel against closed magnetic brake (for 2 secs.) and a "roll-away monitor" are integrated as standard features.

The logic board of the FPS is connected to the LAS module (see sheet nos. M12, M13) with a ribbon cable (X20). Via this cable, the hydraulic signals are sent to the logic board, data is exchanged via a serial interface (RS 232) and the external diagnosis connector X99 connected to the logic board.

Copyright protected. No part of this manual may be reproduced in any form. Copyright reserved.

https://truckmanualshub.com/

Travel and pump controller

General

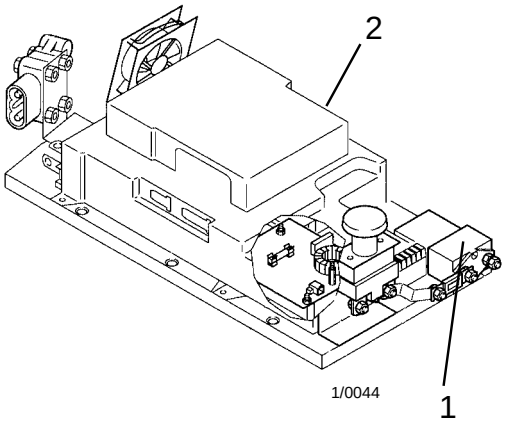

The control system continuously carries out self-diagnosis using numerous control current circuits, and switches off in the event of an error.

When the control system has been successfully tested by the internal safety monitor, the main contactor (1) becomes operative.
When 48V are applied, the voltage is reduced to approx. 28V after about 200 ms, in order to prevent the main contactor coil overheating.

Technical data - main contactor:

R_{Coil} : approx.75Ω
I_1 : approx. 0.6A
I_2 : approx. 0.4A

The control system can be parameterised with the help of the WinPulsE software, and in this way the travel and braking performance adapted. Diagnosis of the system can also be carried out (see sheet no. V37).

The interface (2) at the FPS is not of any significance for service purposes.

Copyright protected. No part of this manual may be reproduced in any form. Copyright reserved.

https://truckmanualshub.com/

Travel and pump controller (FPS)

Guide to components

The FPS is made up of the following components:

(1)	Load handling controls module (LAS-module)	Id. no. W8 409 734
(2)	Logic board, FPS	Id. no. W8 409 671
(3)	Amplifier, drive motor	
(4)	Amplifier, pump motor	
(5)	DC/DC converter	Id. no. W8 409 595 (see sheet no. M16)
(6)	Main contactor	Id. no. W8 406 797 (see sheet no. M9)
(7)	Fan	Id. no. W8 409 666
(8)	Heat sink	
(9)	Control current fuse	(see sheet no. M3)
(10)	Main current fuse	(see sheet no. M3)

Copyright protected. No part of this manual may be reproduced in any form. Copyright reserved.

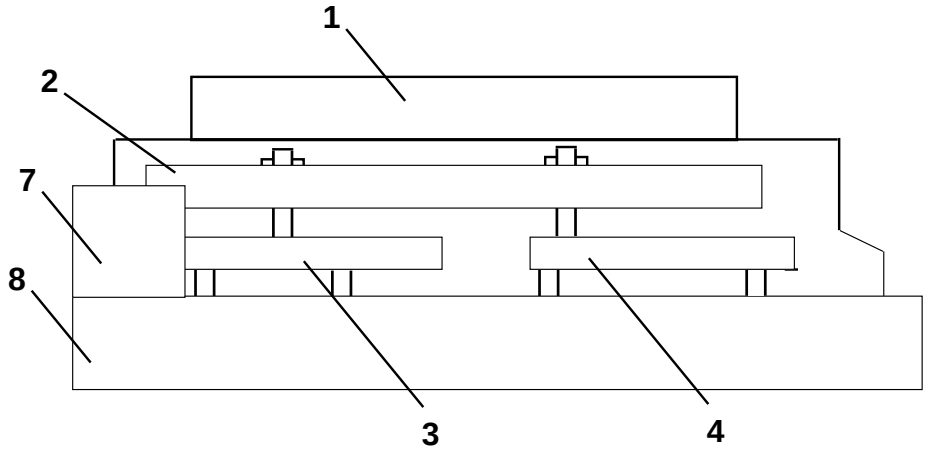

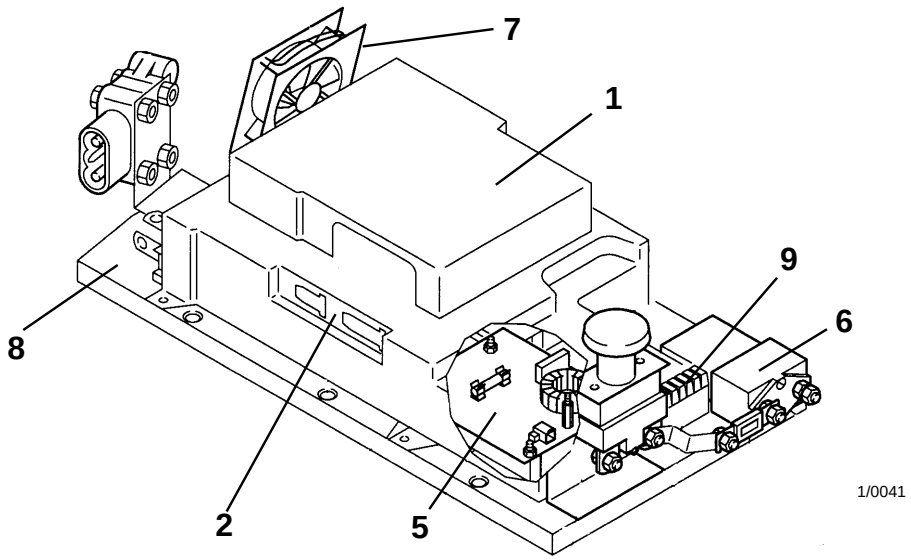

https://truckmanualshub.com/

Travel and pump controller

Main current connections

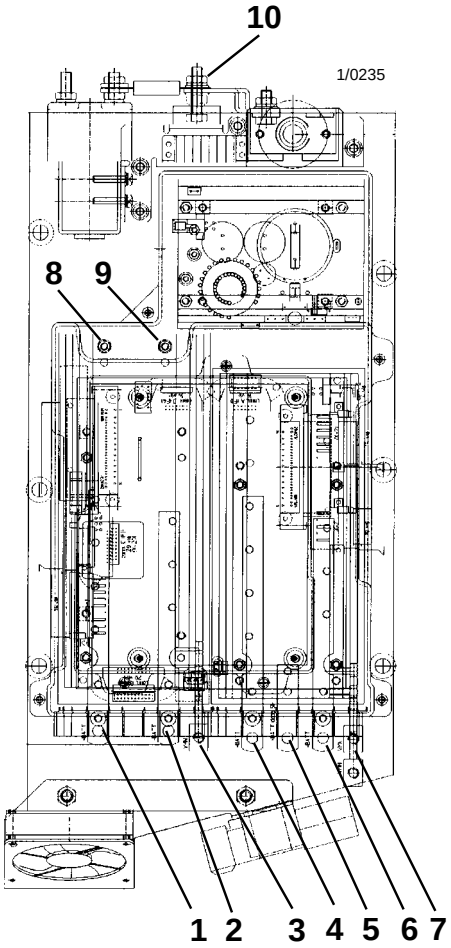

(1) + Batt (A1 drive motor)

(2) - Batt (travel amplifier)

(3) A2 (timed negative "VMN", drive motor)

(4) + Batt (hydraulics amplifier)

(5) P + (pump motor A1)

(6) - Batt (hydraulics amplifier)

(7) P - (timed negative"VNM", pump motor D2)

(8) F1 field terminal, drive motor F1

(9) F2 field terminal, drive motor F2

(10) G + (48V from battery, after emergency-stop switch)

VMN = **V**oltage **M**ain **N**egativ

(timed battery minus)

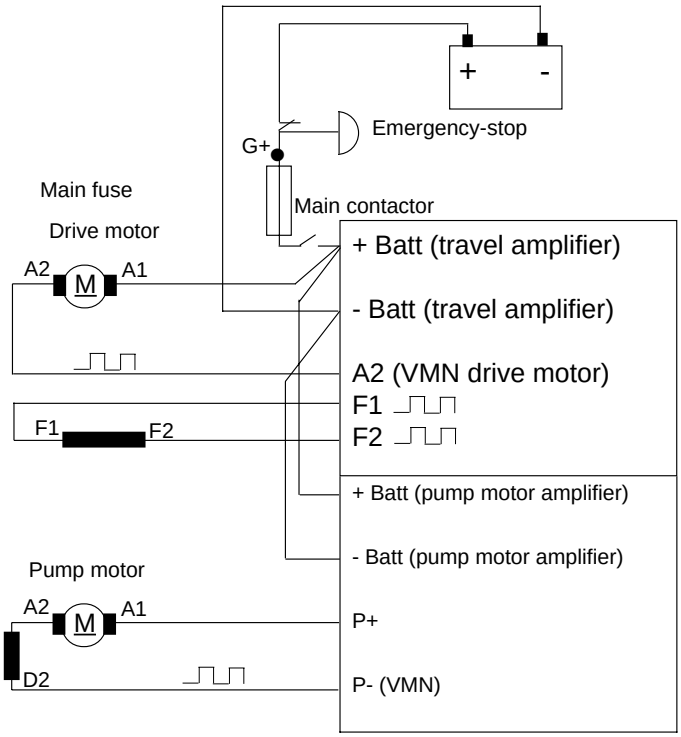

Copyright protected. No part of this manual may be reproduced in any form. Copyright reserved.

https://truckmanualshub.com/

Travel and pump controller

Control current connections

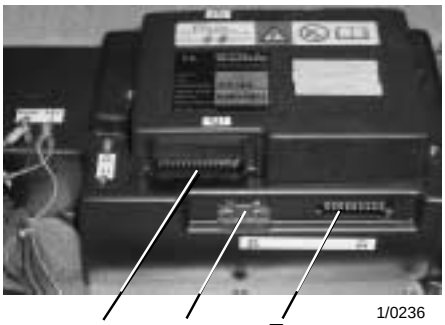

1/0236

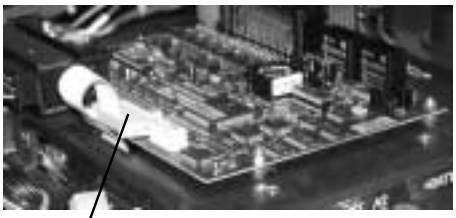

1/0238

	Connector	Component
(1)	X10 (42-pin)	LAS module
(2)	X11 (42-pin)	LAS module
(3)	X5 (interface)	Logic board
	Not of any importance for service!!	
(4)	X20 (ribbon cable)	Logic board / LAS
(5)	X 4 (18-pin)	Logic board
(6)	X2 (14-pin)	Logic board
(7)	X3 (10-pin)	Logic board
(8)	X8 (10-pin)	Transfer connector Fuses
(9)	24V picked off from internal DC/DC converter T = 24V H = 0V	

Copyright protected. No part of this manual may be reproduced in any form. Copyright reserved.

https://truckmanualshub.com/
Copyright protected. No part of this manual may be reproduced in any form. Copyright reserved.

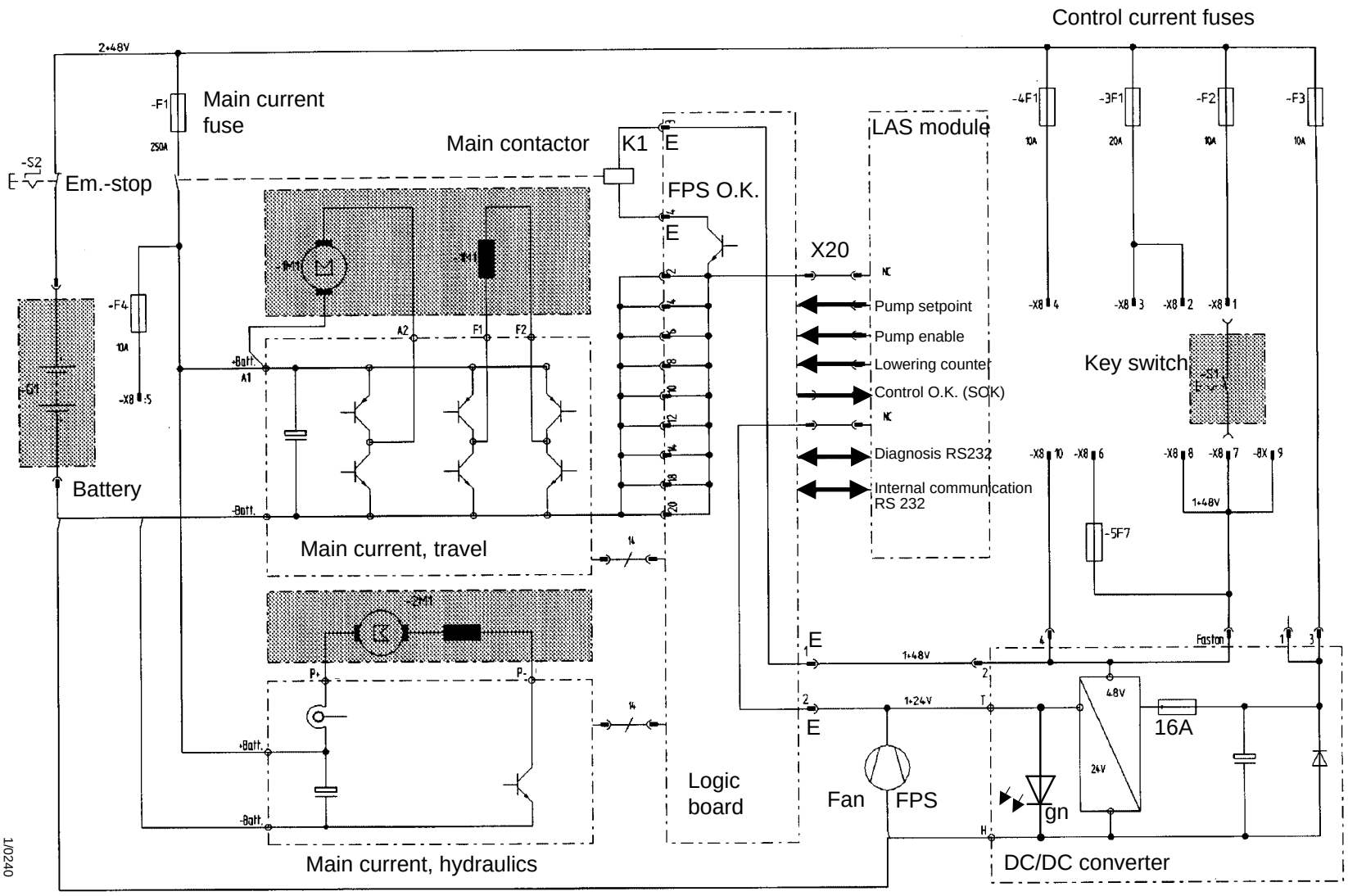

1/0240

https://truckmanualshub.com/

Travel and pump controller

Logic board and main current circuits

The logic board monitors the switching inputs, and safety circuit with the microprocessor fitted on the board and makes logical connections.

The microprocessor (1) is monitored by a superior processor (OTP) (2).

There are different values stored in the program EPROM (3) as standard values. These can be set using a notebook (see sheet no. V37). These modified values are then stored in the EEPROM.

This means that the travel and braking performance of the vehicle can be optimised.

Using the digital and analogue input signals, the information from the LAS module (pump setpoint, pump enable) sent via the connecting lead (5), the logic board sends information on to the amplifiers.

The interface (4) is not of any significance for service work.

Via connector E, the main contactor is driven and the board is driven with 24V or 48V (see sheet no. M13).

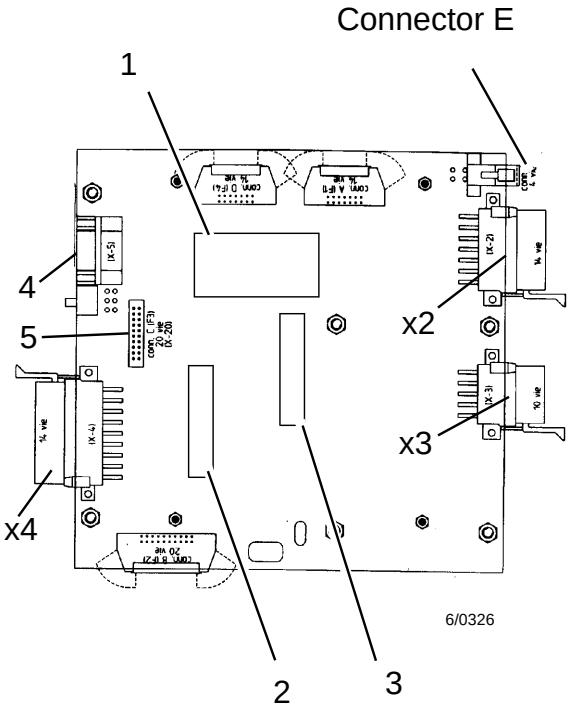

Copyright protected. No part of this manual may be reproduced in any form. Copyright reserved.

https://truckmanualshub.com/

Travel and pump controller

Logic board and main current circuits

The two amplifiers for travel (1) and the hydraulics (2) receive the necessary information about the control situation via ribbon cables (3, 4 and 5). Information (e.g. temperature) also comes back to the logic board via these cables.

The power transistors (MOS-FETs), that are fitted at the amplifiers are responsible for selecting the motors.

Remark: The logic board and the amplifiers cannot be replaced separately, since they are adjusted to one another in the factory.

If any of the elements are faulty, the entire unit must be replaced.

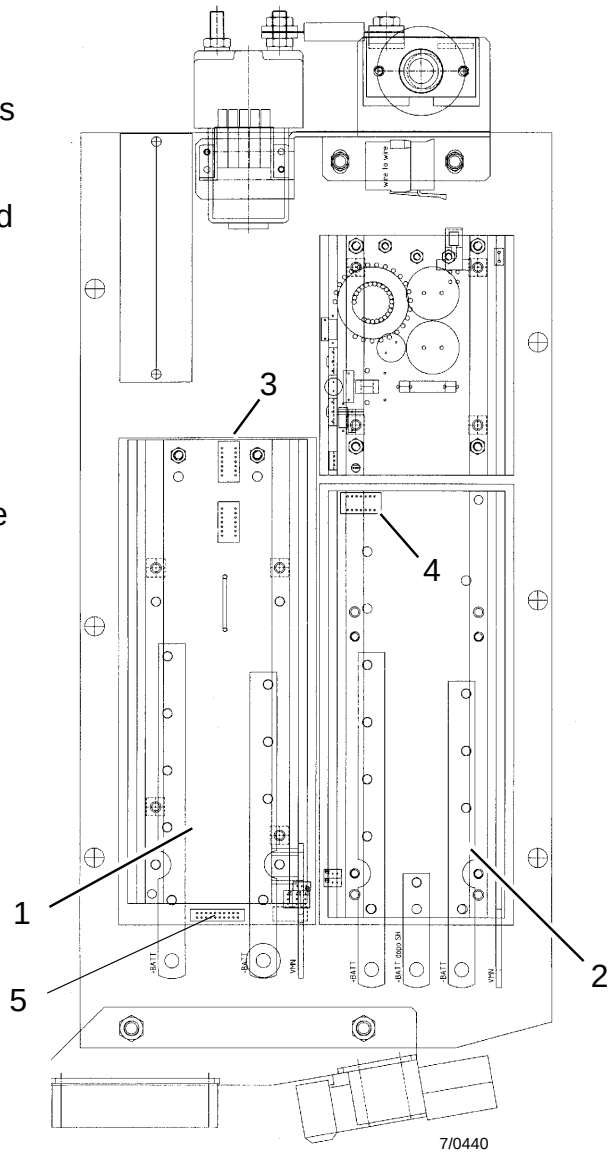

Copyright protected. No part of this manual may be reproduced in any form. Copyright reserved.

https://truckmanualshub.com/

Travel and pump controller

DC/DC converter
Id. no. W8 409 595

The timed DC/DC converter (1) is a component integrated in the FPS.
The +48 volt battery voltage is reduced to +24 volt supply voltage.
A green LED (6) indicates that the output voltage is in order.

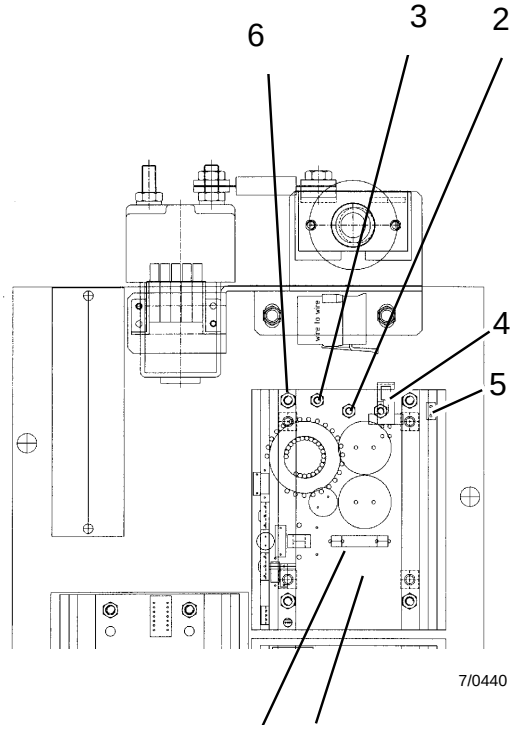

Connections:

(2) : 0 volts - Terminal bolt H (output)
(3) :1+24 volts - Terminal bolt T (output)
(4): Connector CN I - see picture below
(5): Connector CH - see picture below

Remark: For pin assignment, see sheet no. M13

(7) **Fuse:** input end (16A/500V, super fast-action)
Id. no. W8 407 456

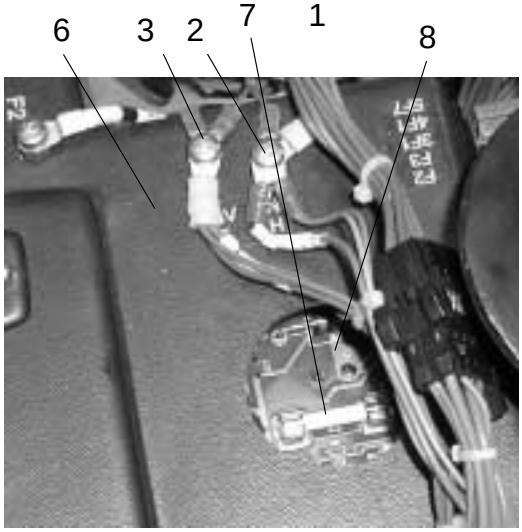

Technical data

Input end:	+48V/10A
Output end:	+24V/10A short-circuit proof
I_{max} continuous:	10A
I_{max} peak:	16A

Remark: The fuse (7) can be checked and replaced through the opening (8). The LED (6) can also be checked.

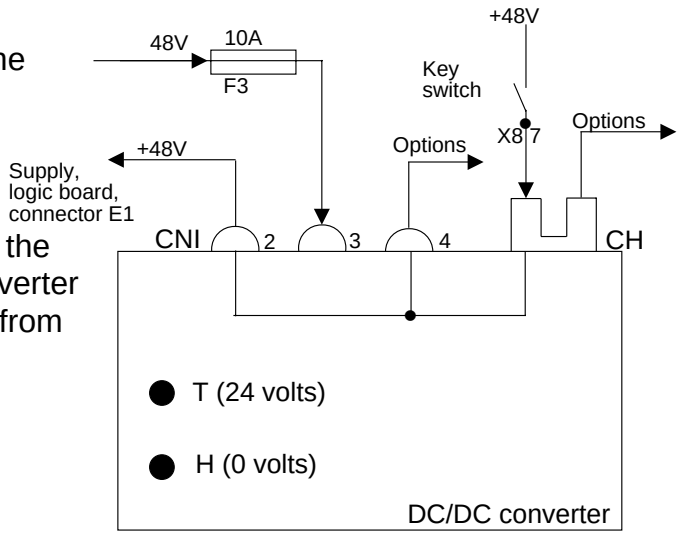

In order to replace the entire DC/DC converter, the complete FPS must be removed, since the converter is screwed against the surface of the heat sink from below .

Copyright protected. No part of this manual may be reproduced in any form. Copyright reserved.

https://truckmanualshub.com/

Travel and pump controller

Control of the drive motor

At a low speed (setpoint from travel transducer < 60%), the field current is equal to the nominal current (IF nom = 17A) and the armature voltage changes with the setpoint from 0 to 48 volts (at 60% travel setpoint).

Over 60 % of the setpoint, the armature voltage remains constant (48 volts) and the field current decreases, so that the speed is increased up to a set minimum field current (Parameter max. speed Forw/Backw, see sheet no. V48).

If, however, the armature current is increased slightly (under load), the minimum field current is not reached, rather the field current remains even higher, the higher the armature current is. The torque or degree of efficiency are given priority at the cost of the speed.

At a slope, in the same way, an increasingly high torque is demanded, and the armature current increases. The field current also increases at the same time, until it reaches double the nominal value (approx. 34A). The armature current then reaches almost the maximum current (273A, parameter "Traction Imax", see sheet no. V48).

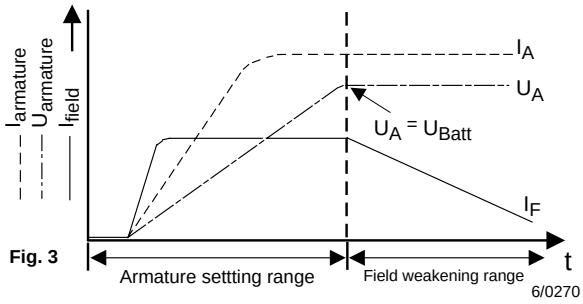

Fig. 3

Copyright protected. No part of this manual may be reproduced in any form. Copyright reserved.

https://truckmanualshub.com/

Travel and pump controller

Functional principle of the main current circuits

Travel

The 48V voltage is applied to the main current circuit via the main contactor K1and is active (K1 closed) as soon as the voltage at the capacitor package (1) reaches more than 10V (initial charging of the capacitor package via key switch). The capacitor package is charged continuously. In the event of a serious error, the main contactor drops out.
The main current circuit of the travel controller consists of an armature control via contacts A2 and A1 for the armature of the drive motor (Fig. 1) and a field controller (4 quadrants) via terminals F1 and F2 for controlling the field coil of the drive motor (Fig. 2).

The armature and the field are controlled separately, depending on the travel situation at any one time.
The control variables for the armature and the field are:

- Travel setpoint
- The current at the time, which is measured by the test shunt (Hall sensor).

When the vehicle moves off, the motor operates like a series motor, i.e. with nominal field excitation (I_{nom} = 17 A) in the breakaway phase, in order to reach the nominal breakaway torque.

Remark: When the vehicle starts up, a so-called booster function is enabled in the area of the armature control, i.e. for the first 10 seconds of start-up, a maximum armature current of 350A can be drawn. Not until t= 10 secs. is the current regulated to the max. armature current (Parameter "Traction Imax").

Armature control

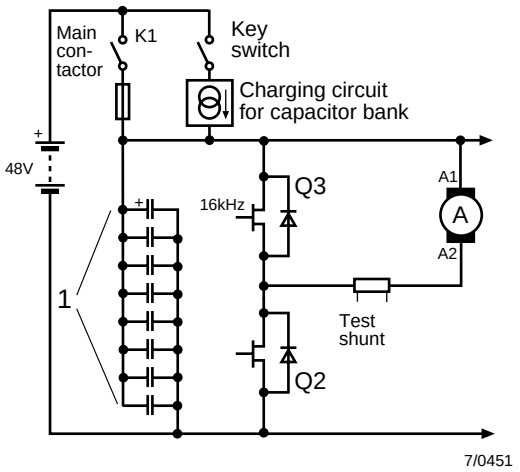

Field control

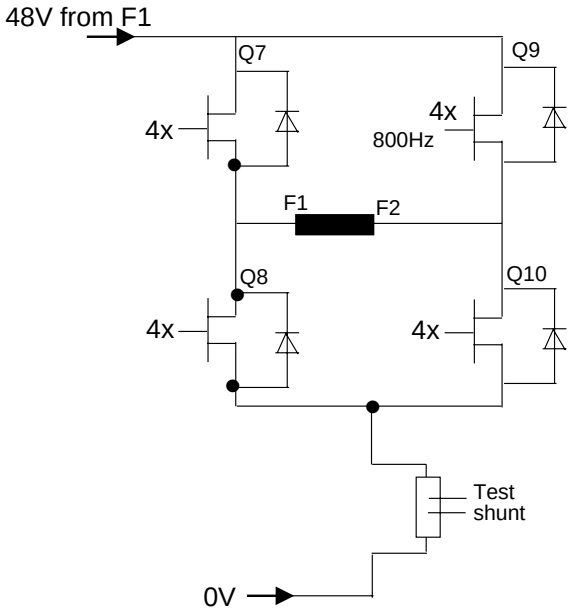

Copyright protected. No part of this manual may be reproduced in any form. Copyright reserved.

https://truckmanualshub.com/

Travel and pump controller

Functional principle of travel

The speed is increased by increasing the armature voltage or the armature current (I_{max} = 273 A) until the armature current has reached the battery voltage (48 V).
To reach the end speed, the field excitation is weakened.

In normal operation, the field and armature controls alternate continuously, depending on the situation at the time.
The MOSFET Q3 operates with a delay and anti-parallel to the MOSFET Q2, which generates a clear square-wave signal, and reduces the induced voltage.

In regulation of the field current (full bridge), the method of operation is similar.
When current flows from F1 to F2, Q10 connects through and Q7 and Q8 switch with a delay and anti-parallel. If current flows from F2 to F1, Q8, Q9 and Q10 switch with a delay and anti-parallel.

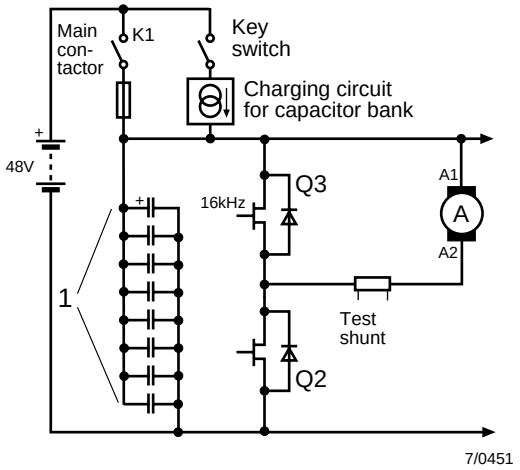

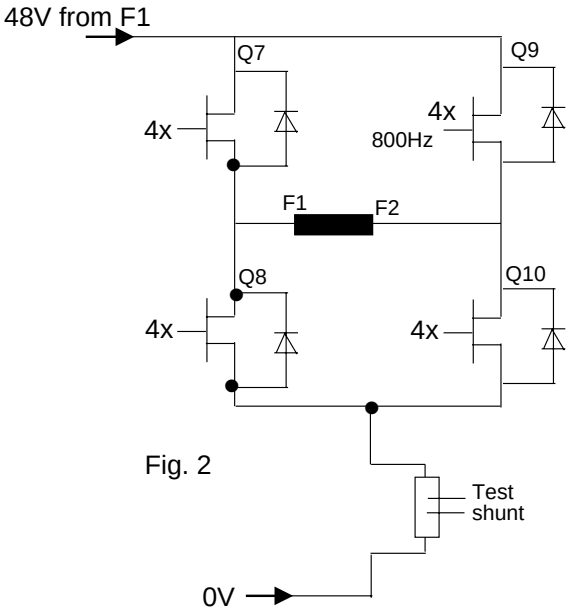

Fig. 2

Copyright protected. No part of this manual may be reproduced in any form. Copyright reserved.

https://truckmanualshub.com/

Travel and pump controller

Functional principle of the main current circuit for generator braking

On generator braking, the field is initially fully excited (approx. 34A). This causes an increase in the voltage at the armature of the drive motor during the braking process.

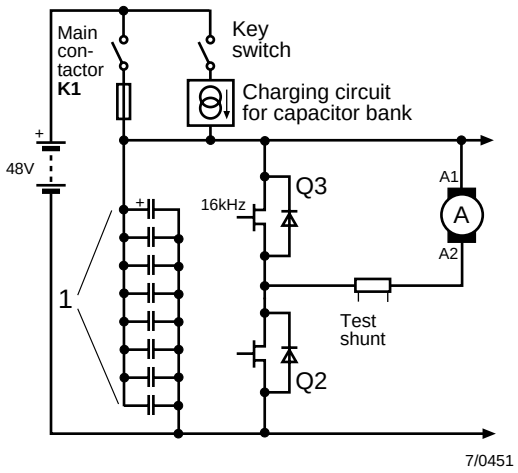

U_{Motor} is higher than U_{Batt} and current flows from A1 back to the battery via the MOSFETs Q2 and main contactor K1.

The maximum current is limited by the timing of the MOSFETs (parameters can be set).

If U_{Motor} is smaller than U_{Batt}, so the current is regulated as it flows through the MOSFETs Q3.

This process continues until the motor comes to a standstill.

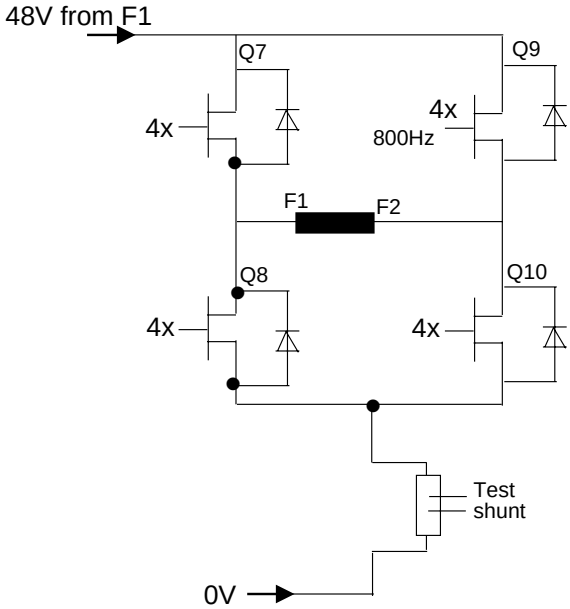

Generator braking is initiated:

- When the accelerator pedal is released ("Release Braking" parameter)
- When the brake pedal is depressed lightly ("Pedal Braking" parameter)
- When the travel direction is changed when the accelerator pedal is pressed = reversing ("Invers Braking" parameter)
- When the deadman switch is released ("Release Braking" parameter)
- When the vehicle is at a standstill and begins to roll away during the monitoring phase (roll-away monitoring, parameters cannot be set).

Remark: For futher details on the parameters, see sheet no. V48

Copyright protected. No part of this manual may be reproduced in any form. Copyright reserved.

https://truckmanualshub.com/

Travel and pump controller

Functional principle of the main current circuit for hydraulics

For information on the capacitor bank charging circuit, see sheet no. M18.
The main current circuit of the hydraulic controller is switched via the MOSFETs Q1 (14 MOSFETs parallel).

It controls the current to the hydraulic motor (pulse width modulation), which is connected at the main current terminals P+ and P-.

The main current circuit is designed for 500A and is set to 390A with parameter settings ("Pump Imax" parameter).

In order to keep the induced voltage low, the recovery diodes D1 are used (6 diodes parallel).

The level at which the motor is driven is proportional to the input signal "Pump setpoint" (1), which is generated in the LAS (on the basis of the setpoint specification/parameter) and is sent via the internal connection X20 (see sheet no. M13) to the logic board.

The only error monitoring is "PUMP I = 0 ever" or "PUMP STBY I high", i.e. there is something wrong with the armature current registration in the pump motor (see sheet no. M26).

Error: "Pump I = 0 ever" = main contactor does not drop out

Error: "Pump STBY I high" = main contactor drops out

The current that is currently flowing is determined by a test shunt (2) in the main current circuit.

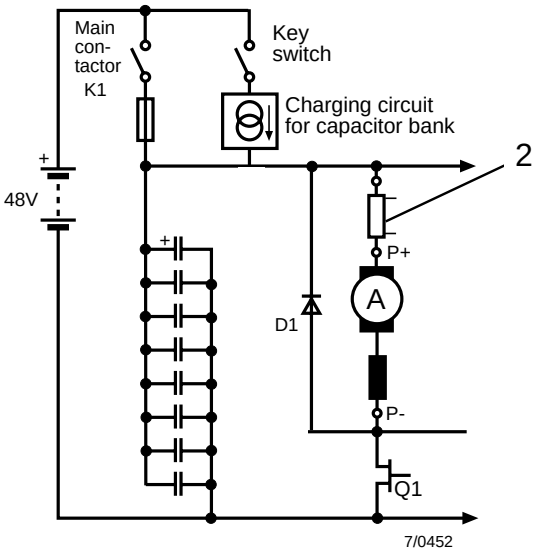

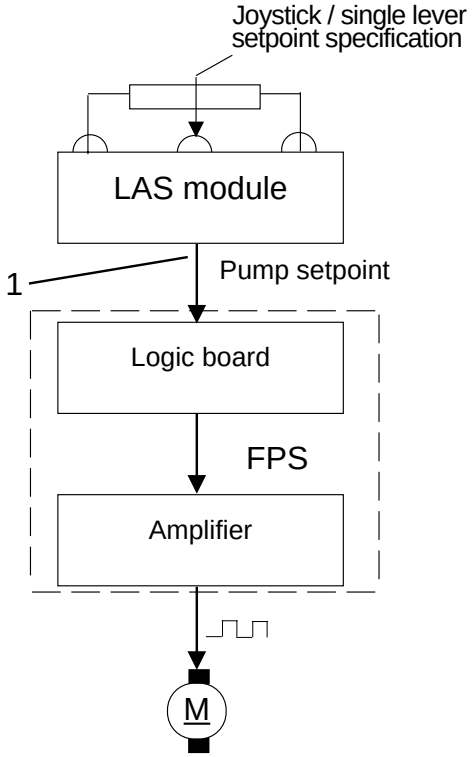

Copyright protected. No part of this manual may be reproduced in any form. Copyright reserved.

https://truckmanualshub.com/

Travel and pump controller

Safety circuit

General

There are two error situations that can occur:

1. The main contactor drops out in the event of an error or does not become operative when the vehicle is switched on. The function of the vehicle is affected.

2. The main contactor does not drop out, but the function of the vehicle is still affected.

When an error occurs, the relevant error code is stored in the error memory of the FPS **a n d** the LAS module. From here they can be read out and deleted (see sheet nos. V55, FPS error memory, and V27, LAS module error memory).

The FPS errors are described in detail on the following pages.

Copyright protected. No part of this manual may be reproduced in any form. Copyright reserved.

https://truckmanualshub.com/

Travel and pump controller

Safety circuit
Roll-away monitor

This monitoring system is activated if:

- the electromagnetic brake is released,
- the pump motor is selected,
- a lowering movement is initiated,
- the generator braking process is complete,
- the vehicle is switched on and the electromagnetic brake is released at the same time (switch is already actuated),
- the brake pedal is released.

The monitoring process is interrupted as soon as the electromagnetic brake is closed.

When the monitor is active, the speed of the drive motor is monitored for 20 seconds by exciting the field.
Current impulses with a length of 300 ms are applied to the field every 1.48 seconds.

The first impulse at the field is 15% of the nominal value, and all following ones are 30%.
If a movement of the drive motor is ascertained during the test time (20 seconds), (voltage induction due to the turning rotor), the vehicle is braked with generator braking.

The vehicle cannot, however, be brought to an absolute standstill, since the generator braking moment is proportional to the speed and therefore becomes weaker the slower the vehicle moves.
This means that the vehicle cannot be held on a ramp with this function, but rolls down it at a reduced speed (approx. 2.5 km/h).

Copyright protected. No part of this manual may be reproduced in any form. Copyright reserved.

https://truckmanualshub.com/

Travel and pump controller

Description of error codes

Errors can be read out of the error memory of the FPS (see sheet no.V55) and some of them out of the error memory of the LAS module (see sheet no. V27).

Battery open (FE01, see V56)

The battery is not locked, and the travel command has been selected.
The travel speed is reduced.
The travel setpoint is reduced internally to 20%.

Incorrect sequence (FE06, see V56)

If the signal from the accelerator pedal microswitch is applied for at least 0.5 seconds, but there is no signal applied from the deadman switch, this error is produced.
Travel is not enabled or is interrupted. In order to start, the deadman switch must first be actuated and then the accelerator pedal.

Copyright protected. No part of this manual may be reproduced in any form. Copyright reserved.

https://truckmanualshub.com/

Travel and pump controller

Description of error codes

Pedal voltage not OK (FE07, see V56)

If the accelerator pedal is actuated and the accelerator pedal microswitch closes, the travel setpoint must not deviate from the stored minimum value by more than + 1V.

Pedal voltage range (FE08, see V56)

The setpoint must be between 4V and 9.6V.

Remark: If this error has already occurred before switching on, the main contactor does not become operative.

EEPROM faulty (FE10, see V56)

EEPROM - checksum error.
The altered parameters are damaged. You can attempt to rectify this error by re-entering the parameters.

Driver short-circuit (FE11, see V56)

When the capacitors are charging (via key switch input, see sheet no. M18), a check is carried out to ascertain whether the driver for the main contactor is open, i.e. whether + 48V (1) is applied to the negative connection of the main contactor coil and at E4 of the logic board (see sheet no. M13).

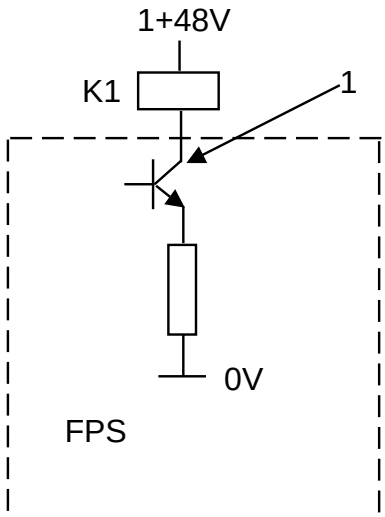

Logic card faulty (FE11, see V56)

If no "driver short-circuit" has been detected, the transistor 1 x is briefly switched off and then on. Consequently, a signal change should then take place at (1). If it does not, the system detects this as a selection error.

Contactor driver (FE11, see V56)

If no "driver short-circuit" or "logic card faulty" error is detected, the system checks whether the driver timing is taking place.
In order to close the main contactor, an impulse is sent to the driver (main contactor becomes operative with 48V). A check is carried out to ensure that the driver has closed and after 200 ms the driving signal of the main contactor is pulsed with a pulse width modulation (PWM) of 60%. This results in a holding voltage of approx. 28V over the main contactor.

Copyright protected. No part of this manual may be reproduced in any form. Copyright reserved.

https://truckmanualshub.com/

Travel and pump controller

Description of error codes

Micro St 6215 faulty (FE11, see V56)

If there are discrepancies between the micro-processor and the OTP (see sheet no. M14) during evaluation of the input information, or if the two are no longer able to communicate with each other, this error message is issued.

No field current (FE12, see V56)

A check is carried out to ascertain whether the microprocessor receives a response about the current field current when the field is selected.

High field current (FE 13, see V57)

Field current too high, is not monitored during the roll-away monitoring (see sheet no. M23).
Field current is detected, although it has not been selected.

Pump I = 0 ever (FE14, see V57)

Monitoring of the pump current.
Although the pump motor is driven, no current is flowing.

Pump Stby I high (FE14, see V57)

A monitoring feature ensures that no current flows over the pump motor if the amplifier is not selected.

Copyright protected. No part of this manual may be reproduced in any form. Copyright reserved.

https://truckmanualshub.com/

Travel and pump controller

Description of error codes

Capacitor charging (FE15, see V57)

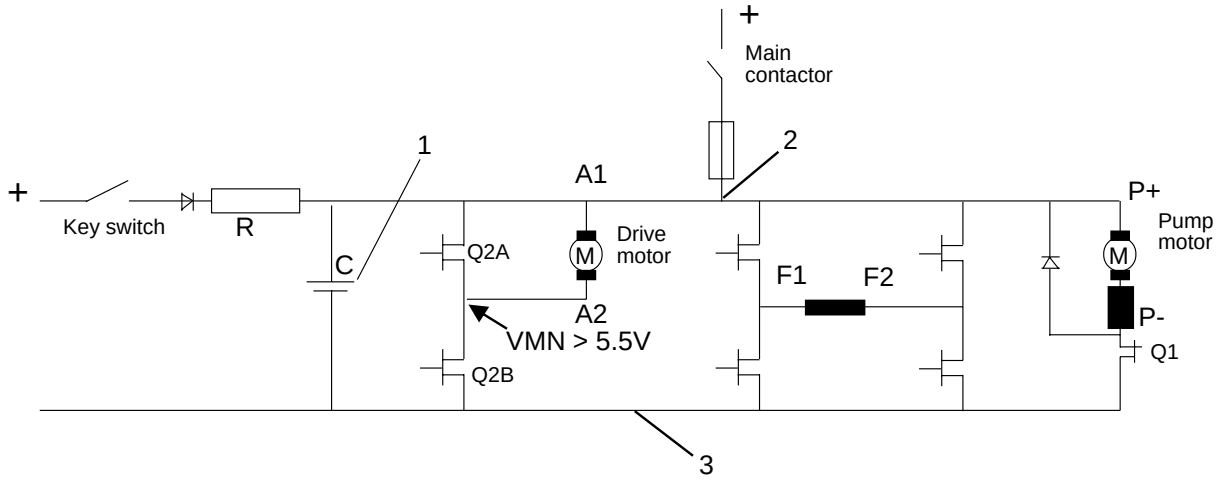

The capacitor bank (1) is charged when the key switch is turned on.
If the voltage at V M N (Volt-Motor-Negative) does not rise above 5.5 V, this error message is issued.

With the control system switched off, check whether there is a short-circuit between positive (+Batt /A1) (2) and negative (-Batt) (3) (via the MOSFETs) or if the short-circuit is caused by the connection to the motors.

1. Switch off the vehicle.
2. Disconnect the armature and field of the drive motor.
   If the short-circuit has disappeared it is caused by the drive motor.
3. Disconnect the pump motor and check whether the short-circuit has been rectified. If not, one of the amplifiers is faulty.

Copyright protected. No part of this manual may be reproduced in any form. Copyright reserved.

https://truckmanualshub.com/

Travel and pump controller

Description of error codes

VMN not OK (FE16, see V57)

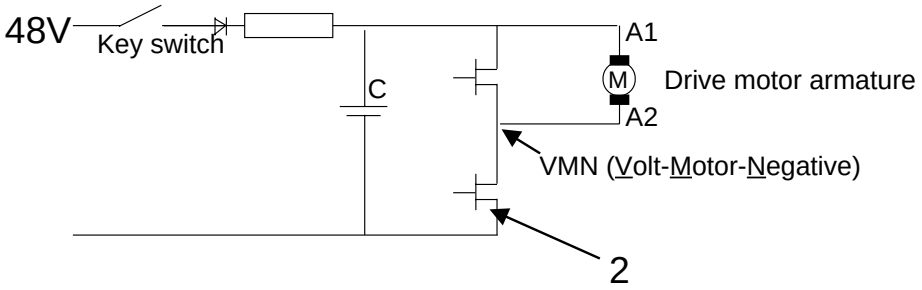

If the voltage at the armature of the drive motor (VMN) deviates from the applied voltage (U Batt. = 48V) by +/- 1V, this error message is issued (only if roll-away monitoring is not active).
During roll-away monitoring, the VMN can deviate from U_{Batt} by up to amx. 3.5V.

If the deviation is too large, the error message is issued.

This may indicate either a short-circuit at the VMN (MOSFET, 2) or that the vehicle is moving at too high a speed to be brought to a stop.
This error may be displayed even if the armature of the drive motor is faulty / not connected.

Copyright protected. No part of this manual may be reproduced in any form. Copyright reserved.

https://truckmanualshub.com/

Travel and pump controller

Description of error codes

V field not in order (FE 17, see V57)

Ths onitoring feature is activated immediately after the vehicle is switched on.
The voltage at the field (1) of the drive motor should be about half the voltage (UBatt/2) at the armature (VMN = UBatt).
In order for the error to be initiated, the voltage deviation must be more than 4.4 volts and continue for more than 2 seconds.
The voltage at the field must definitely be more than 4.4 volts.
(only if roll-away monitoring not active, see M23).

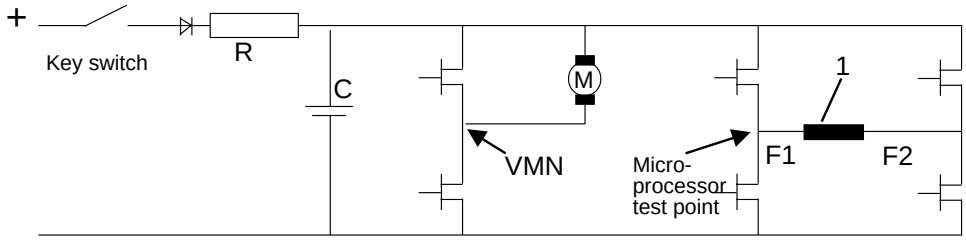

Copyright protected. No part of this manual may be reproduced in any form. Copyright reserved.

Stby I high (FE18, see V57)

- Armature current of the drive motor too high at rest.

- A flow of current is detected in the drive motor armature although it is not selected.

I = 0 ever (FE18, see V57)

- Drive motor armature is selected, but the system detects that no current flows.

https://truckmanualshub.com/

Travel and pump controller

Description of error codes

Main contactor closed (FE19, see V57)

The capacitors are discharged again briefly (by selection of the MOSFETs in the field circuit) immediately after switching on at the key switch, in order to test the status of the contactor contacts.
If they are not discharged, the main contactor is already closed when the key switch is switched to ON.

Remark: This error can also occur if there is something wrong in the field current circuit.

Coil short-circuit (FE19, see V57)

After the main contactor closes, it is clocked (PWM).
If a current that is too high is detected flowing over the contactor, this is identified as a short-circuit (see sheet no. M9).

Drive motor temperature (FE20, see V58)

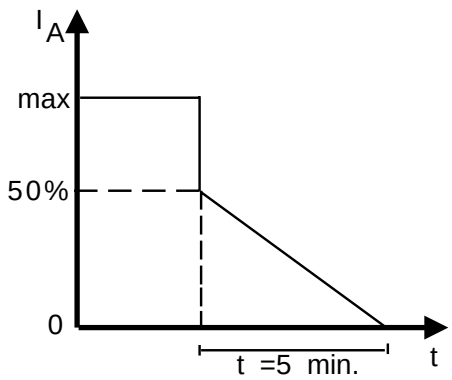

Excess temperature in e drive motor from 140°C.
The maximum armature curent is briefly reduced to half and is set to zero after 5 minutes.
The field is held at the nominal value.
As soon as the temperature switch closes again, the monitoring is stopped.
The braking current is maintained.
The cut-out process can be reset with the key switch. It is then possible to drive again for 5 minutes more.

Drive motor carbon brushes (FE 21, see V58)

This message is issued when the carbon brushes in the drive motor are worn.
It has no effect on the system.

Copyright protected. No part of this manual may be reproduced in any form. Copyright reserved.

https://truckmanualshub.com/

Travel and pump controller (FPS)

Description of error codes

Excess temperature (FE22, see V58)

Excess or under-temperature of the travel amplifier.
If the temperature drops below -10°C, the speed is reduced, i.e. the setpoint is decreased by 60% and the maximum current is reduced to 80%.
If the temperature rises above 77° C, the speed is reduced, i.e. the setpoint is decreased by 60% and the maximum current is reduced linearly with the continued temperature increase from the set value to zero.
I_{max} = 0 at 92° C

Pump motor temperature (FE30, seeV58)

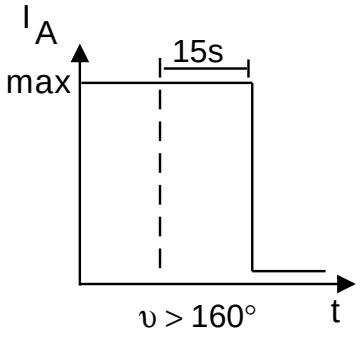

Excess temperature in the pump motor, 160°C.
When the temperature switch opens, the full power of the pump motor is maintained for 15 seconds. Then it is switched off.
This error can be reset by switching off the key switch. If the temperature is then still above 160°C, the pump motor can be run for 15 seconds again.

Pump carbon brushes (FE31, see V58)

This message is issued as soon as the carbon brushes in the pump motor are worn.
It does not have any effect on the system.

Pump temperature (FE32, see V58)

See (FE22).
Excess or under-temperature of the hydraulics amplifier.

Copyright protected. No part of this manual may be reproduced in any form. Copyright reserved.

https://truckmanualshub.com/

Travel and pump controller

Description of error codes

SOK faulty (Sok) (FE42, see V58)

The control system (logic board) makes available an output that is active when the main contactor is closed. It is deactivated when the main contactor is open.
This output is checked for a short-circuit every 8 ms.

This output is also described as "Controller started successfully".
The output is sent to the LAS module via a ribbon cable (connector X20).
If this information is not applied at the LAS module, this blocks all the functions, since the safety monitor of the module is activated (safety relays K1 / K2 drop out).

Battery faulty (FE43, see V58)

The battery voltage is outside the permissible range.

If the battery voltage drops below 30V, this error is issued.

Copyright protected. No part of this manual may be reproduced in any form. Copyright reserved.

https://truckmanualshub.com/

Contents

Sheet no.

Block diagram ..... N 2
Functions N 3
- Lifting main lift ..... N 3
- Lowering main lift ..... N 4
- Reach ..... N 5
- Tilting/transverse shift/additional hydraulics 1/2 ..... N 6

Chassis valve block N 7
- Overview ..... N 7
- Functional elements ..... N 8
- Adjusting work ..... N 10
- Emergency release valve ..... N 12
- Electrical data ..... N 13

Reach carriage valve block N 14
- Overview ..... N 14
- Functional elements ..... N 15
- Adjusting work ..... N 17
- Electrical data ..... N 17

Additional hydraulics valve block ..... N 18
Pre-pressure valves for reach ..... N 19
Line break protection ..... N 20
Load holding valve (attachment, fork inclination) ..... N 22
Pump unit N 23
- General ..... N 23
- Technical data ..... N 23
- Removal ..... N 24
- Pump motor, general ..... N 25
  - Carbon brush monitoring ..... N 26
  - Temperature monitoring ..... N 27
- Removing the motor ..... N 28
- Replacing the carbon brushes ..... N 29
- Hydraulic pump ..... N 31

Tank display and tank ..... N 32
Runback filter ..... N 33

Copyright protected. No part of this manual may be reproduced in any form. Copyright reserved.

https://truckmanualshub.com/
Copyright protected. No part of this manual may be reproduced in any form. Copyright reserved.

Block diagram

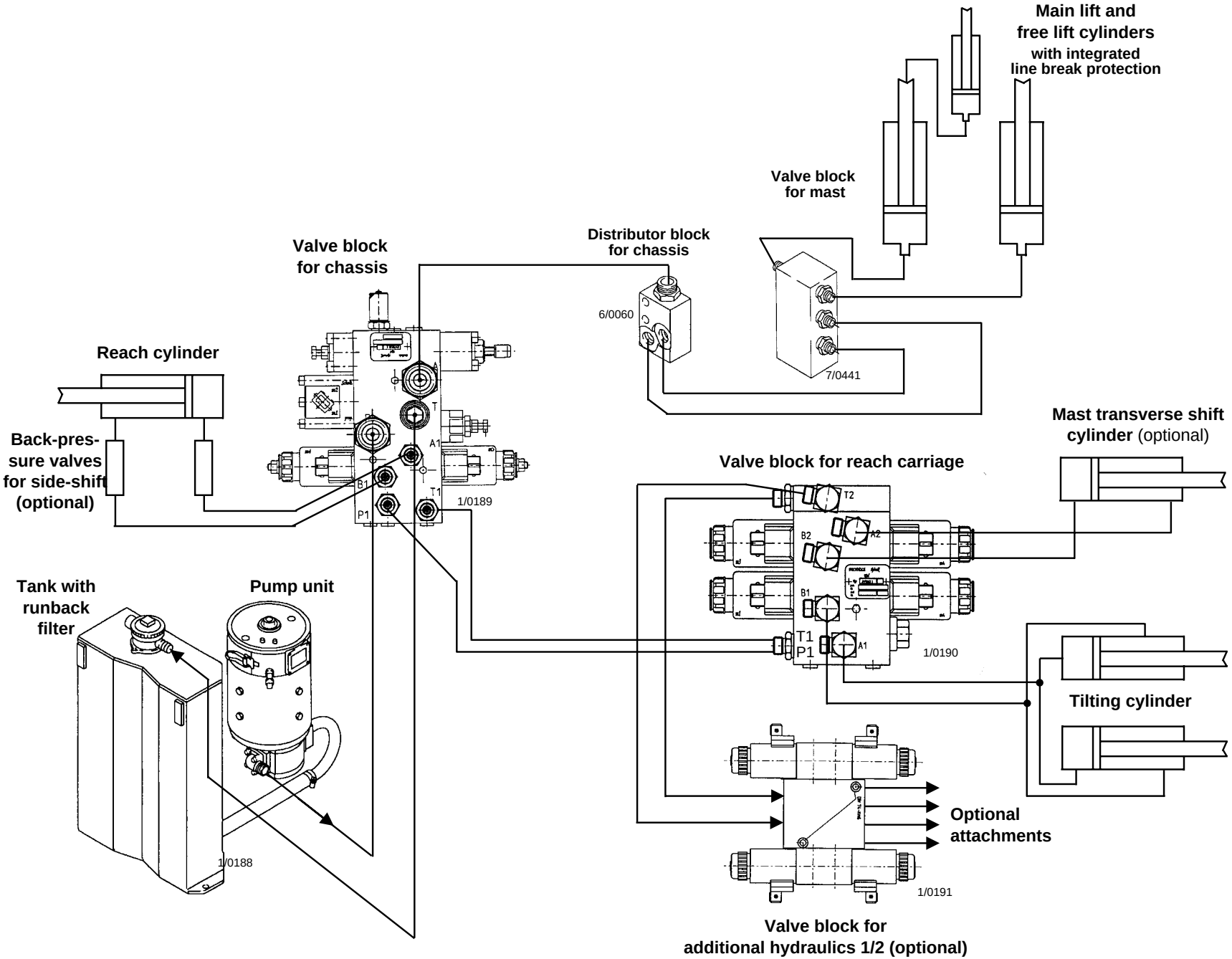

https://truckmanualshub.com/

Functions

Lifting the main lift

The "Lifting setpoint" is transmitted to the load handling controls module (LAS-module) by moving the joystick (1) or the lever (2).

This supplies the "switching valve for lifting" with power and sends the "Pump setpoint" (parameter-dependent) to the travel and pump controller (FPS).

In this way, the speed of the pump is set by the FPS.

Due to the oil pressure, the valve rod is opened by the "switching valve for lifting" and the oil can pass through past the pressure balance to the main lift cylinders.

The lifting speed is therefore only dependent on the amount of oil delivered by the pump = the pump speed.
This is proportional to the amount by which the joystick or lever is deflected.

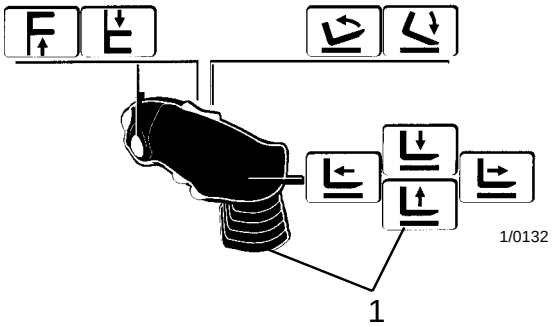

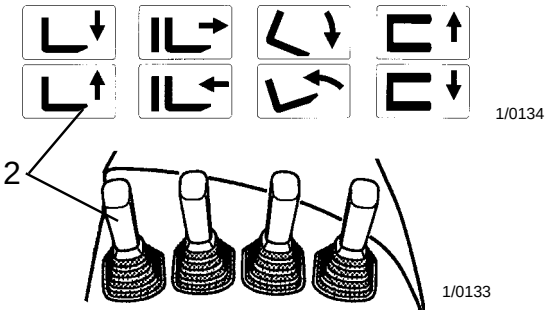

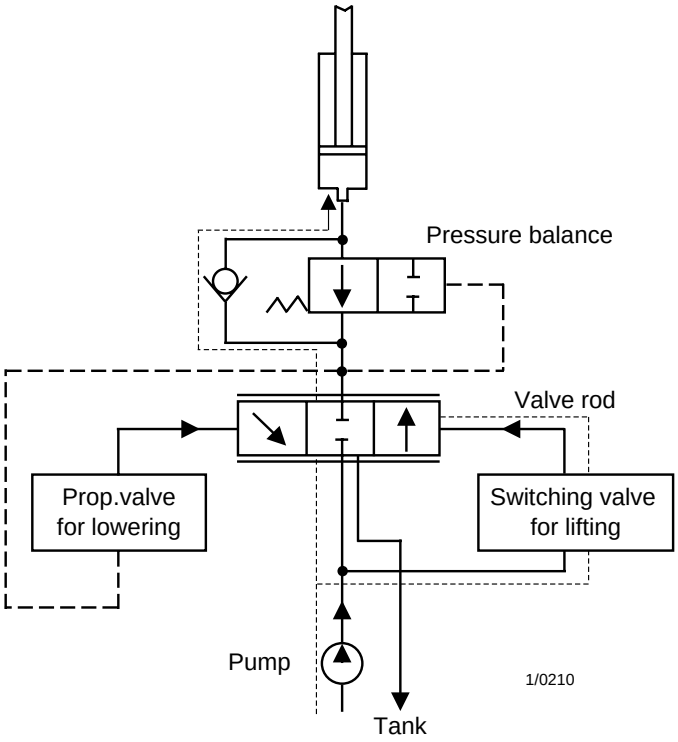

Copyright protected. No part of this manual may be reproduced in any form. Copyright reserved.

https://truckmanualshub.com/

Functions

Lowering the main lift

The "Lowering setpoint" is transmitted to the load handling controls module (LAS-module) by moving the joystick (1) or the lever (2).

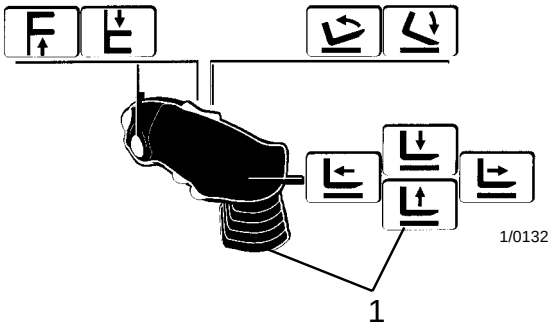

This supplies the "proportional valve for lowering" with power. As a result of the pressure in the system (caused by the oil column in the main lifting cylinders and the load), the valve rod is opened and the oil flows through the runback filter and back into the tank.

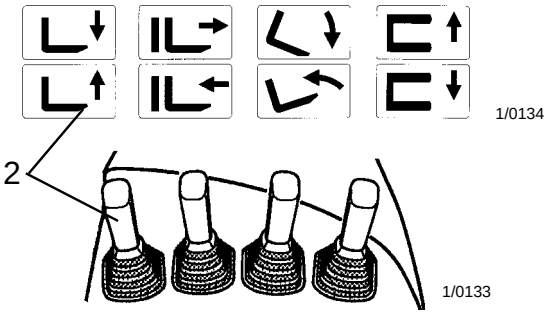

The oil that flows back also has to pass by the "pressure balance".
This automatically balances out the volume of oil, in order to keep the "pressure point" between the pressure balance and the valve rod constant.

As a result, consistent control of the valve rod by the proportional valve is guaranteed, irrespective of the load.

Remark: The max. lowering speed is limited by a mechanical lowering brake valve (see sheet no. N11).

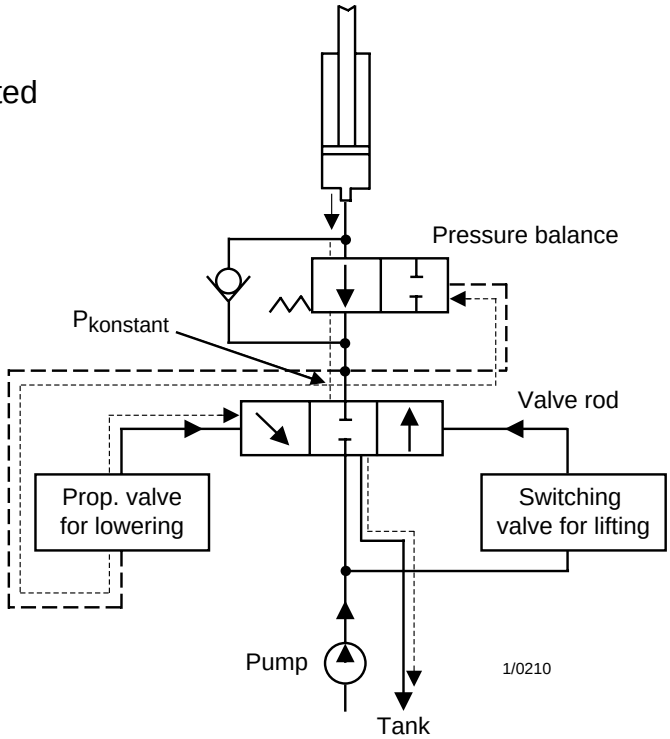

Copyright protected. No part of this manual may be reproduced in any form. Copyright reserved.

https://truckmanualshub.com/

Functions

Reach

Reach at the load side (LS) or Reach at the drive wheel side (DWS) is selected by deflecting the joystick (1) or the lever (2). In accordance with this movement, the "reach setpoint" is sent to the load handling controls module (LAS module).
This in turn supplies power to the "proportional valve for reach" for the relevant direction (parameter-dependent).
At the same time, the "pump setpoint" is sent from the LAS module to the travel and pump controller and in this way, the speed of the pump controlled.

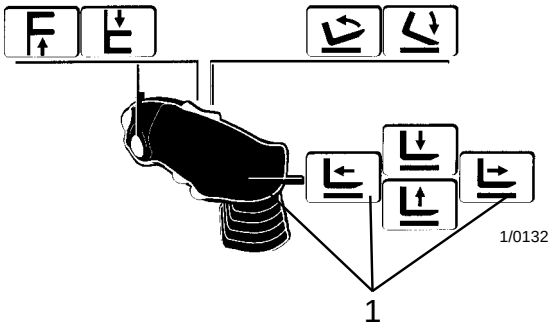

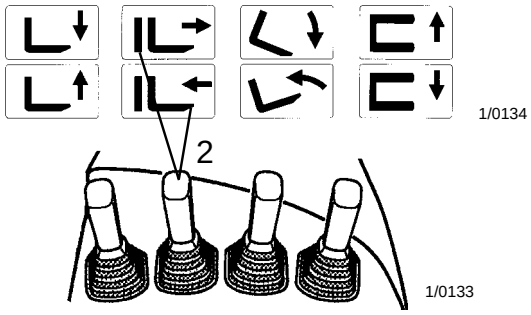

The system is regulated for this process so that during the individual reach function, the pump always delivers less oil than can physically flow through the opening of the proportional valve (prevention of build-up pressure), i.e. the speed depends on the pump speed.

If, on the other hand, a synchronous movement, e.g. "lifting and reach" is selected, the increase in the pump speed results in an intentional formation of build-up pressure at the proportional valve, so that the function runs synchronously.

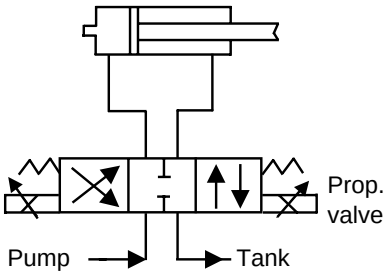

Remark: The maximum reach speed is limited by diaphragms (see sheet no. N9).
Pre-pressure valves can be fitted as a optional extra for the reach function (see sheet no. N19).

Copyright protected. No part of this manual may be reproduced in any form. Copyright reserved.

https://truckmanualshub.com/

Functions

Tilting/transverse shift/additional hydraulics 1/2

The principle by which these axes function is the same, i.e. the relevant setpoint is sent to the load handling controls module (LAS-module) by selecting

- tilting at the joystick (4) or lever (5)
- transverse shift at joystick (6) or lever (7)
- additional hydraulics at the joystick (8) or lever (9) (a separate key must also be pressed).

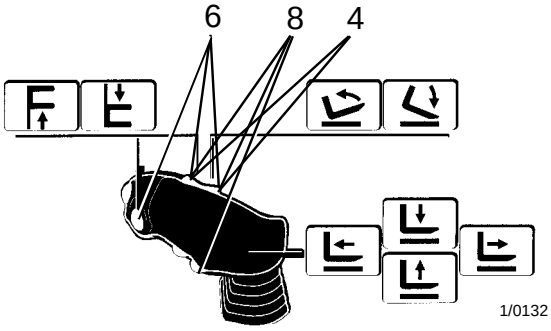

This supplies the relevant switching valve for the selected direction with power. At the same time, the "Pump setpoint" is sent from the LAS-module to the travel and pump controller (FPS) (parameter-dependent) and consequently the speed of the pump controlled.

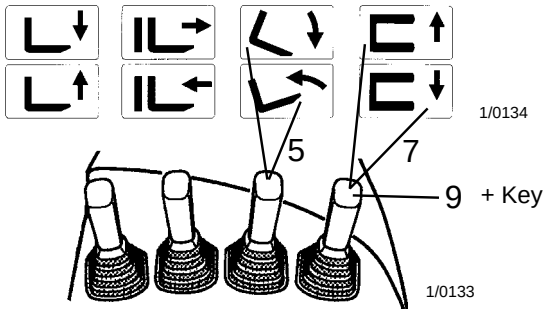

The speed of the movement is therefore only dependent on the amount of oil delivered by the pump = the pump speed.
This is proportional to the amount by which the joystick or lever is deflected.

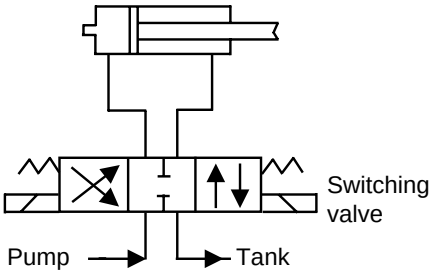

Remark: The maximum speeds are limited by diaphragms (see sheet no. N16).
For the tilting function, a load holding valve (overcenter valve) is integrated for the "load end tilting" direction (see sheet no. N15).

Copyright protected. No part of this manual may be reproduced in any form. Copyright reserved.

https://truckmanualshub.com/

Chassis valve block

1. Version: W8 423 575 (model AV5233-3-3)
2. Version: W8 423 932 (model AV5233-4-3)
3. Version: W8 423 931 (model AV5233-1-3)

Overview

Three different variants of the valve block are used.
They can be distinguished by the relevant Id. no. and model name, which are marked on the manufacturer's nameplate (9).

1. Version: Used until end 2000;
separate pre-pressure valves for reach available (see sheet no. N19).

2. Version: Used until about March 2001; separate pre-pressure valves no longer included, since block is modified with relation to this (see sheet no. N9).

3. Version: Used from about April 2001; lowering performance of main lift modified (start delay on lowering improved)

Copyright protected. No part of this manual may be reproduced in any form. Copyright reserved.

1 Test connection

2 Emergency release screw

3 Pressure relief valve

4 Proportional valve for reach DWS, 2Y25 (H-plan) 2Y54 (E-plan)

5 Proportional valve for reach LS, 2Y26 (H-plan) 2Y55 (E-plan)

6 Proportional valve lowrg. (pins 1+2), 2Y20 (H-plan) 2Y37 (E-plan)

7 Switching valve for lifting (pins 2+3), 2Y2 (H-plan) 2Y37 (E-plan)

8 Adjusting screw for maximum speed

9 Manufacturer's nameplate

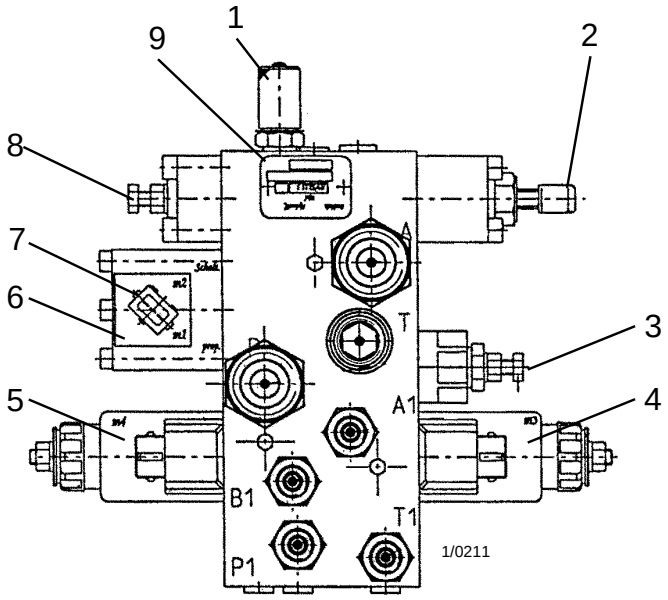

Remark: This valve block is also suitable for cold store operation (-30°C)!

https://truckmanualshub.com/

Chassis valve block

Functional elements

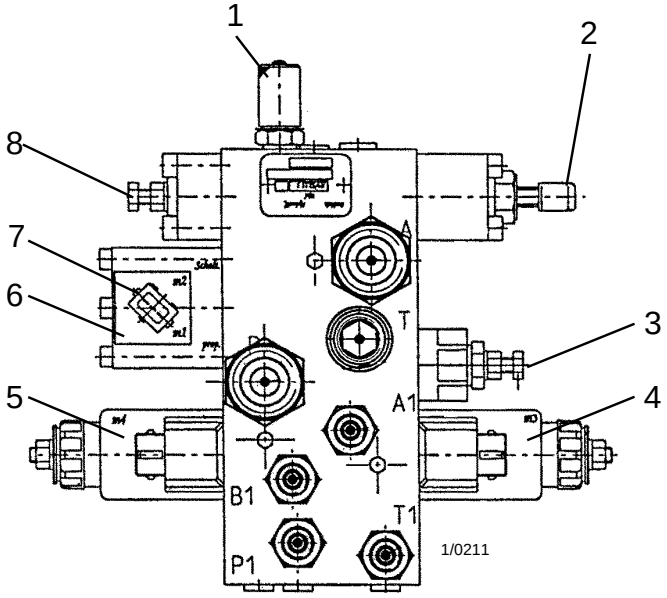

Test connection (1)

Manometer connection for measuring the current presure in the system and for checking/adjusting the pressure relief valve (3, see sheet no. N10).

Emergency release screw (2)

Option for opening the oil runback into the tank and in this way lowering the fork holder by hand in emergencies (see sheet no. N10).

Pressure relief valve (3)

Protects the pressure generated by the 12kW pump unit (adjustment / testing, see sheet no. N12).

Proportional valves for reach (4 + 5)

The proportional valves are for selection of the direction for DWS reach (4) and LS reach (5), and, with the simultaneous functions lifting and reaching, for limiting the volume of oil for reach, so that synchronous operation of the two axes is achieved. In individual reach movements, they are only for selection of the direction (see sheet no. N5).

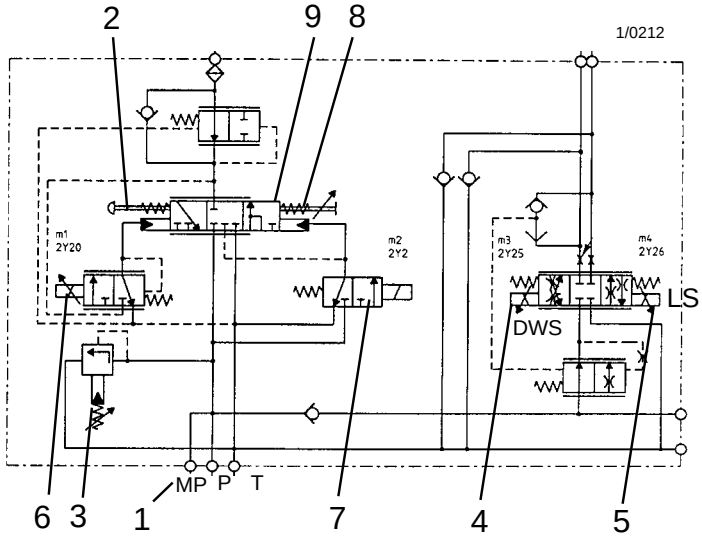

Proportional valve for lowering (6)

The current to this valve, and consequently the lowering speed, is controlled via pins 1+2.

In addition, the max. lowering speed is also limited by the adjusting screw (8) (see sheet no. N11). Max. lowering speed 60cm/sec.

Switching valve for lifting (7)

This is for selection of the lifting function, so that the valve rod (9) opens and consequently the oil can flow through the block from "P" to "A" to the lifting cylinders.

Copyright protected. No part of this manual may be reproduced in any form. Copyright reserved.

https://truckmanualshub.com/

Chassis valve block

Functional elements

Pressure balance (1)

Internal, inside the valve block. For constant selection of the valve rod during the lowering function (constant pressure point (2) in valve block).

Non-return valve (3)

Internal, inside the valve block. Acts as a "bypass" valve on lifting, so that the oil does not have to flow through the pressure balance.

Pressure balance with throttling function (4)

Internal, inside the valve block. Together with the internal shuttle valve (5) and the diaphragms (6) this serves to limit the maximum reach speed to 11.5 cm/sec.

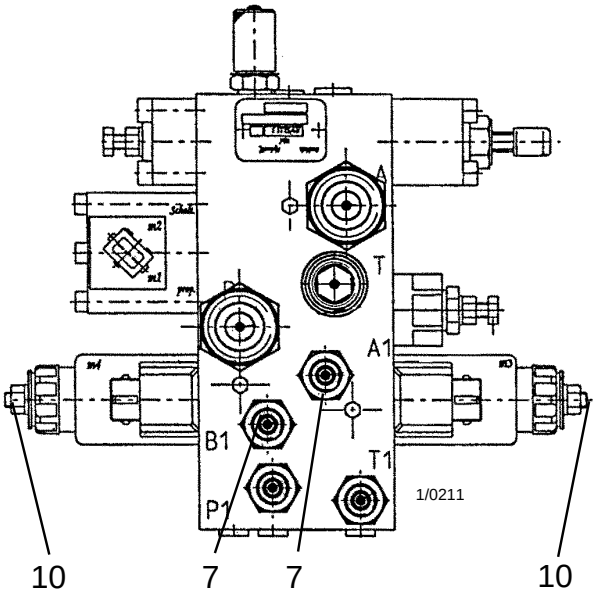

Reach diaphragms (6)

These diaphragms are screwed directly into the connectors A1 and B1 (7). They limit the max. reach speed to 11.5 cm/sec. They must not be altered.
Diaphragm size: A1 = 3.2 mm ø
B1 = 2.6 mm ø
These values are stamped into the underside.

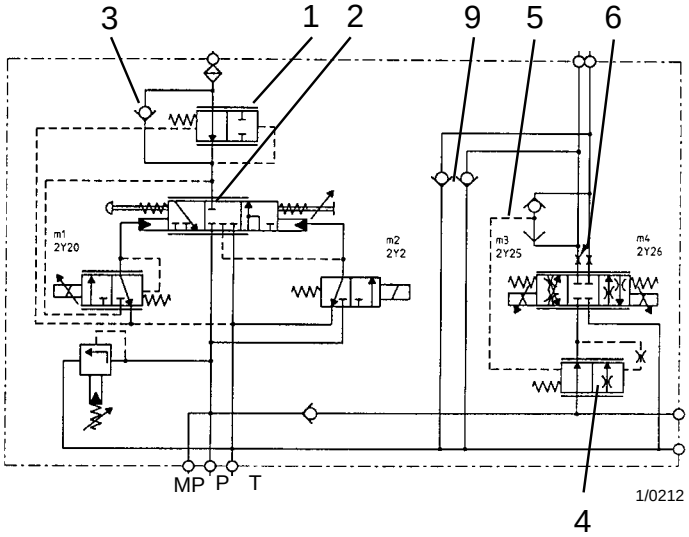

Re-suction channels (9)

Internal, inside the valve block. The re-suction feature for reach prevents air building up in the reach carriage if the vehicle is braked suddenly during simultaneous reaching and travel. Only fitted from the 2nd version of the valve block (see sheet no. N7). The 1st version needs separate back-pressure valves for this function (see sheet no. N19).

Adjusting screws for Reach (10)

No changes may be made to these screws, since they are for centring the valve rod for reach, and the starting current for the opening start of the valve is determined by them. They are pre-set by the manufacturer.

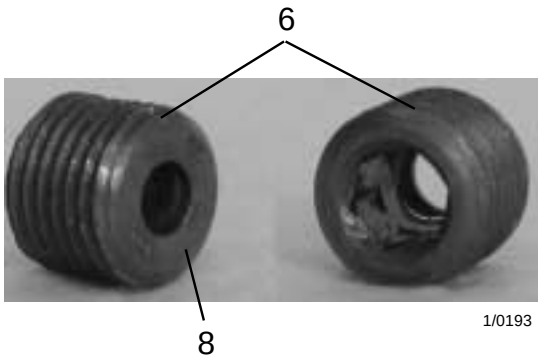

Copyright protected. No part of this manual may be reproduced in any form. Copyright reserved.

https://truckmanualshub.com/

Chassis valve block

Adjusting work

After the valve block has been replaced, various adjusting jobs must be carried out.
The pump and tank must also be flushed out.
This is also necessary after the pump has been replaced.

Flushing out the pump and tank

- Turn the pressure relief valve (1) fully out (0 bar setting).
- Pull out the valve connector for lifting/lowering (2).
- Select lifting for 30 secs.

Remark: "FE 60" appears on the display because the LAS-module has detected a line breakage to the valve for lifting/lowering.

- The oil can now circulate without pressure and is cleaned by the runback filter.
- Reconnect the valve connector.
- Adjust the pressure relief valve.

Pressure relief valve (1)

- Connect a manometer to the test connection (3).
- Pick up the rated load.
- Measure the pressure required to lift the rated load (= operating pressure) and if necessary increase the pressure by turning the screw (1) to the right.
- Add 10% to the measured operating pressure, e.g. measured operating pressure = 180 bar + 10% (18 bar) = 198 bar.
- Move the lifting device to the mechanical end stop (max. pressure builds up) and set the pressure (in this example to 200 bar).
- Finally, check that the pressure relief valve definitely remains closed during the transition from the free lift to the main lift, through the brief pressure peak that occurs here (noise emission, brief loss of speed at mast transition point); if necessary, lower the max. pressure slightly.

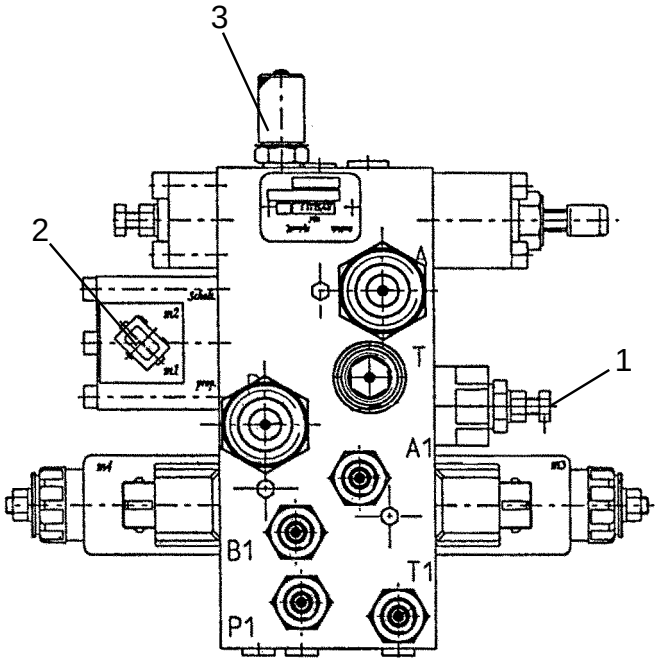

1/0211

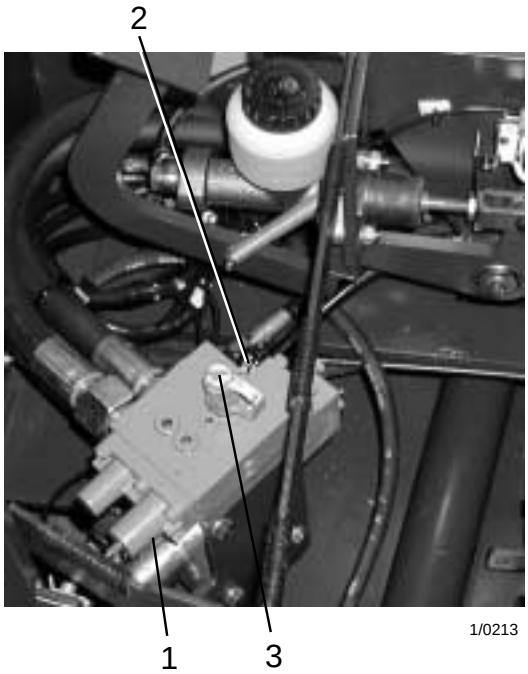

1/0213

Copyright protected. No part of this manual may be reproduced in any form. Copyright reserved.

https://truckmanualshub.com/

Chassis valve block

Adjusting work

Max. lowering speed (1)

In normal operation, the max. lowering speed is determined by the proportional valve for lowering (2) (free lift approx. 52 cm/sec., main lift 55 cm/sec. parameter-dependent).
So that the max. permissible speed of 60 cm/sec. (UVV guideline) is not exceeded in the event of a fault or an incorrectly set parameter, it must be limited at the adjusting screw (1).

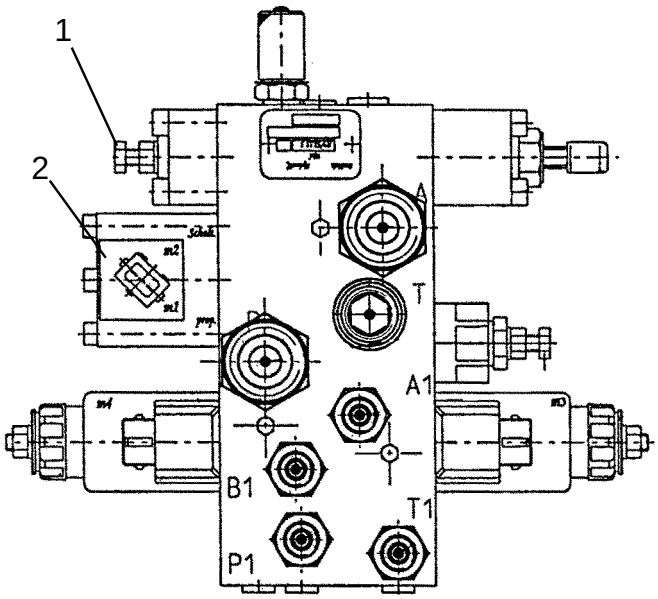

1/0211

- Set the parameter for the proportional valve for lowering max. to 700mA (see sheet no. V21).
- Carry out a lowering operation with rated load and measure the speed.
- If necessary, adjust at the adjusting screw (1):
  Turning the screw to the right reduces the speed
  Turning the screw to the left increases the speed
- Reset the parameter to the "normal value" again (see sheet. V21).

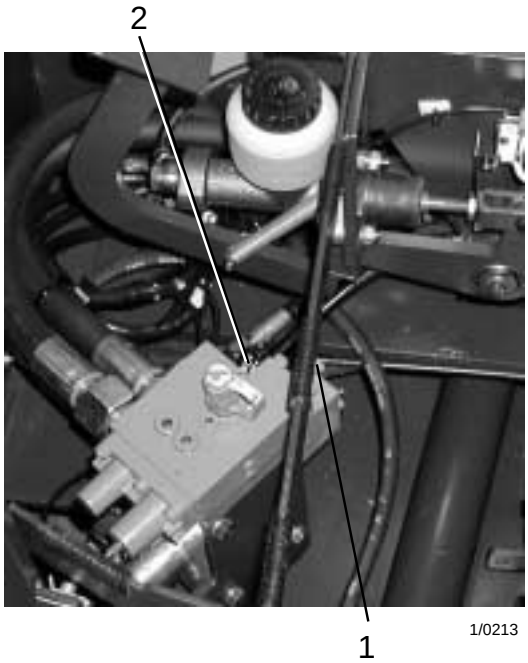

1/0213

Remark: If the proportional valve is opened by 100% (700mA) and the screw for the lowering speed is turned fully out (to the left), the line break protection in the lifting cylinders is triggered during the lowering operation (see sheet no. N20).

Copyright protected. No part of this manual may be reproduced in any form. Copyright reserved.

https://truckmanualshub.com/

Chassis valve block

Emergency release valve

The emergency release valve (1) is for lowering the fork holder in the event of a fault in the control elements or their total failure. When the handle on the valve is turned to the right, the manual lowering process is initiated. After about 11 turns, the valve is fully open = max. lowering speed in emergency operation.

Remark: The valve must be firmly closed again immediately after the lowering process.
When the controls compartment door is closed, the valve can also be accessed through the step opening.

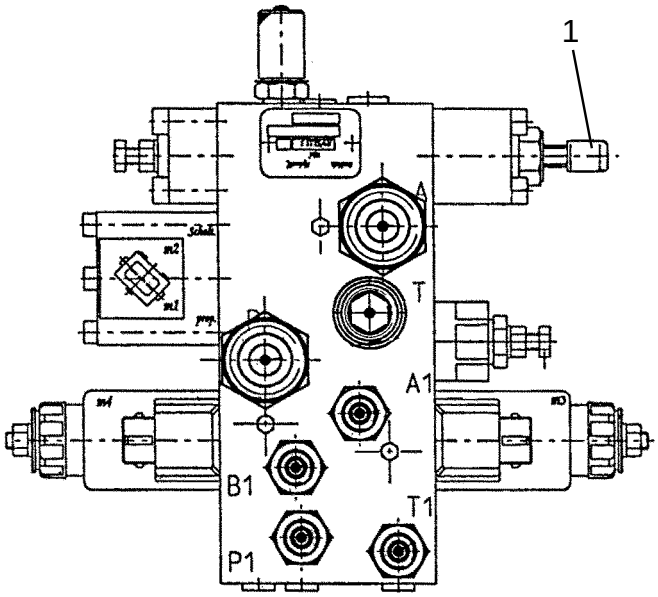

1/0211

1/0213

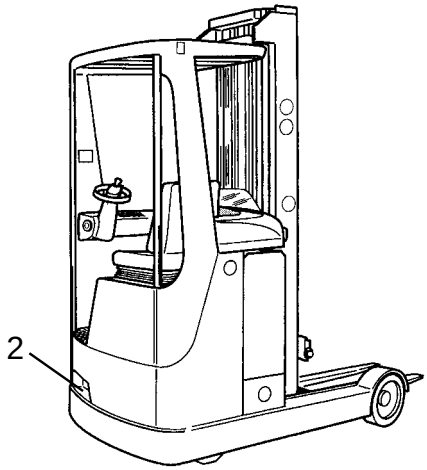

Copyright protected. No part of this manual may be reproduced in any form. Copyright reserved.

https://truckmanualshub.com/

Chassis valve block

Electrical data

Valve	Voltage	Current	Resistance	Comment	Meas. (pin)
Proportional valves for reach 2Y25,2Y26	ca. 6.5V - 13.5V	Parameter-dependent. approx. 700-1500mA	ca. 9Ω	The current is regulated by pulse width modulation (PWM). Reference voltage = 24V	1+2
Proportional valve for lowering 2Y20	ca. 6.5V - 15V	Parameter-dependent ca. 250-550mA	ca. 27Ω	The current is regulated by pulse width modulation (PWM). Reference voltage = 24V	1+2
Switching valve for lifting 2Y2	U_1 ca. 24V U_2 ca.17.5V	I_1 ca. 0,7A I_2 ca. 0,5A	ca. 35Ω	The current is regulated by pulse width modulation (PWM). Reference voltage = 24V	2+3

m

Remark: The switching valve for lifting is initially regulated to the higher starting current I_1 and then to the lower operating current I_2.

Copyright protected. No part of this manual may be reproduced in any form. Copyright reserved.

https://truckmanualshub.com/

Reach carriage valve block

Overview

There are different variants of the reach carriage valve block (1), depending on the vehicle version:

- Standard - tilting only - (2)
  Id. no.: W8 424 362 (model AV5234-2-3)

- Tilting with mast transverse shift option (3)
  Id. no.: W8 423 576 (model AV5235-2-3)

- Tilting with mast transverse shift and preparation for additional hydraulics (4)
  Id. no.: W8 424 766 (model AV5262-1-3)

Remark: The Id. / model no. can be found on the nameplate (5). The valve blocks are also suitable for operation of the vehicle in cold stores (-30°).

6 Switching valve for tilting DWS, 2Y3 (H-plan) 2Y58 (E-plan)

7 Switching valve for tilting LS, 2Y29 (H-plan) 2Y59 (E-plan)

8 Load holding valve, tilting ("overcenter" valve, not adjustable)

9 Switching valve for mast transverse shift, left, 2Y52 (H-/E-plan)

10 Switching valve for mast transverse shift, right, 2Y53 (H-/E-plan)

11 Connection distributor for additional hydraulics

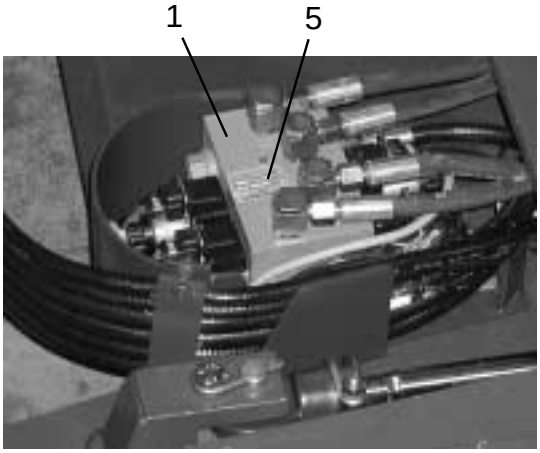

1/0214

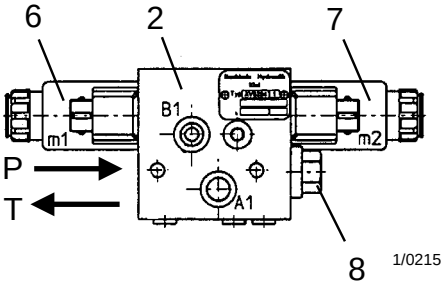

1/0215

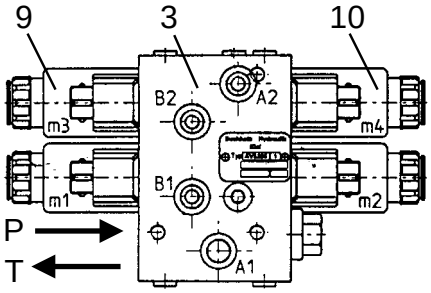

1/0216

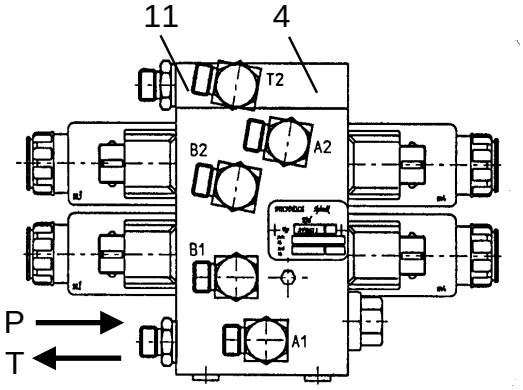

1/0190

Copyright protected. No part of this manual may be reproduced in any form. Copyright reserved.

https://truckmanualshub.com/

Reach carriage valve block

Functional elements

Remark: Each of these functional elements may either be fitted or not, depending on the valve block version (see sheet no. N14).

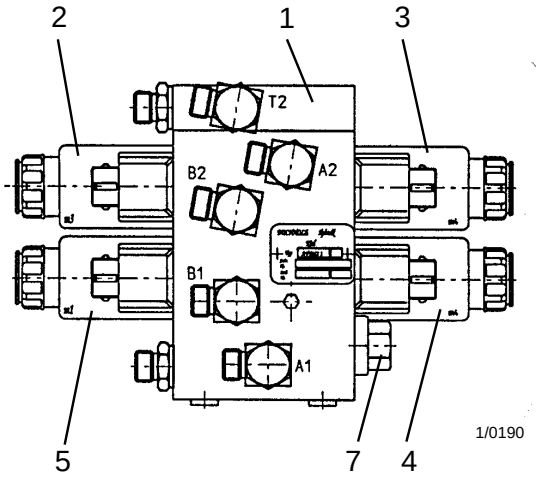

Connection distributor for additional hydr. (1)

Optional. Is required either single or double when additional hydraulics are used, for supplying the separate "additional hydraulics" valve block (see sheet no. N18).

Switching valves for mast transverse shift (2+3)

Optional. These switching valves are for selecting the directions mast transverse shift left (2) and right (3).

Switching valves for tilting (4+5)

The switching valves are for selecting the tilting directions LS (4) and DWS (5).

Load holding valve (6)

The load holding valve (overcenter valve) is needed for the "LS tilting" function, so that when the load is tilted, the mast does not make uncontrolled movements, and so that when the load is lifted and tilting is not selected, the mast does not move on its own.

The valve needs an opening pressure of min. 17 bar and is opened 100% at 34 bar.

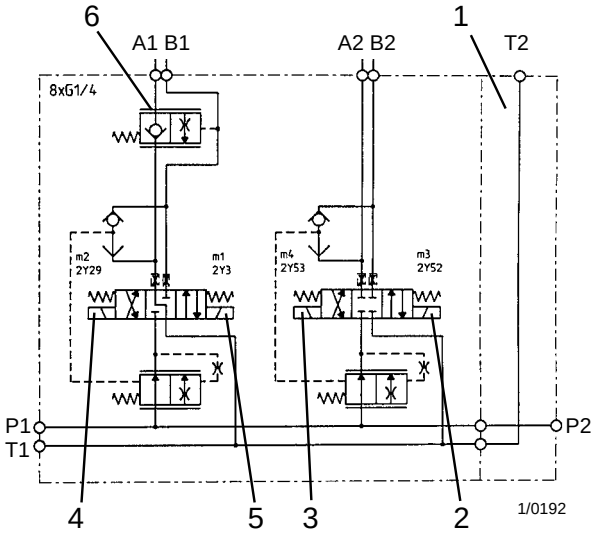

Test: Raise the rated load to 2.5m and tilt the mast fully in the DWS direction. The mast should not give by more than 0.5°/min. on its own.

The valve is located behind the cap (7) and cannot be adjusted.

Copyright protected. No part of this manual may be reproduced in any form. Copyright reserved.

https://truckmanualshub.com/

Reach carriage valve block

Functional elements

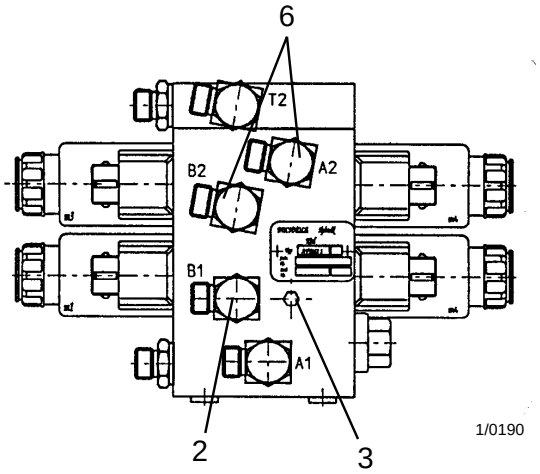

Tilting diaphragms (1)

The diaphragms for tilting are screwed into the valve block directly in connector B1 (2) and behind the separate cover (3) for channel A1.

The diaphragms limit the max. possible tilting time to 3 seconds.

They must not be altered!

Diaphragm size: A1 = 1.9 mm ø

B1 = 1.8 mm ø

This diaphragm value is stamped into the underside (4)!

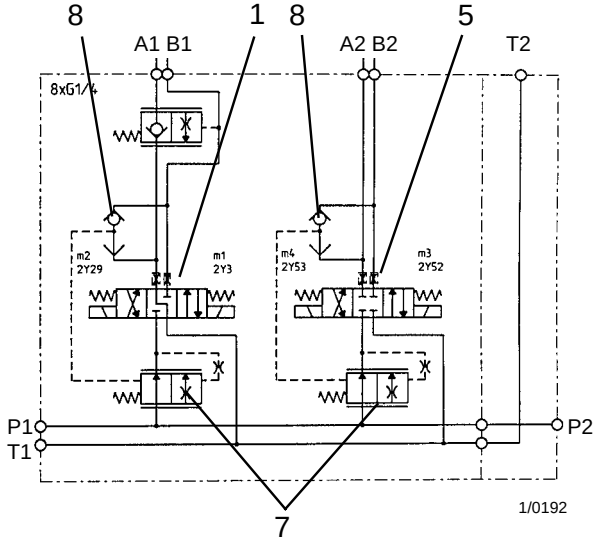

Mast transverse shift diaphragms (5)

The diaphragms for mast transverse shifting are screwed into the valve block directly in connectors A2 and B2 (6).

Their purpose is to limit the max. transverse shift speed.

They must not be altered.

Diaphragm size: A2 = 2.4 mm ø

B2 = 2.4 mm ø

This diaphragm value is stamped into the underside (4)!

Remark: If connectors A2/B2 are not used for the mast transverse shift but for additional hydraulics, the diaphragms are not fitted. This is for supplying the additional hydraulics with the maximum oil volume (litres/min).

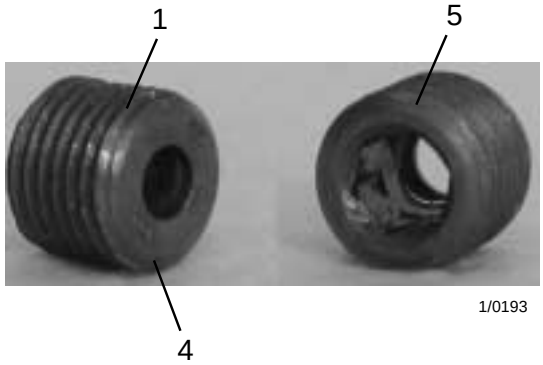

Pressure balance with throttling function (7)

Internal, inside the valve block. Together with the internal shuttle valve (8) and the diaphragms (1, 5), its purpose is to limit the tilting and mast transverse shifting speeds.

Copyright protected. No part of this manual may be reproduced in any form. Copyright reserved.

https://truckmanualshub.com/

Reach carriage valve block

Adjusting work

No adjusting work is required on this valve block (1)!

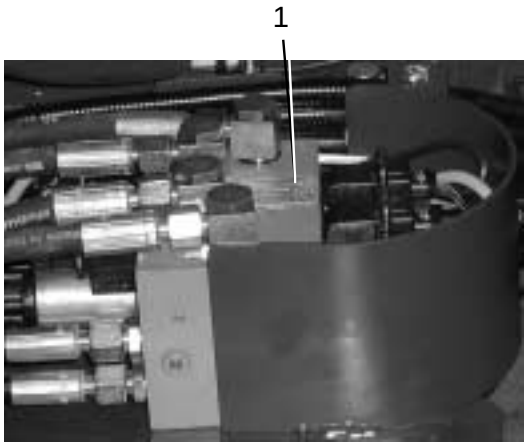

1/0194

Electrical data:

Valve	Voltage	Current	Resistance	Comment	Meas. (pin)
Switching valves for tilting DWS (2Y3), LS (2Y29)	U_1 ca. 24V U_2 ca. 17V	I_1 ca. 1A I_2 ca. 0,7A	ca. 25Ω	The current is regulated by pulse width modulation (PWM). Reference voltage of the PWM signal: 48V	1+2
Switching valves for mast transverse shift left (2Y52) right (2Y53)	U_1 ca. 24V U_2 ca. 17V	I_1 ca. 1A I_2 ca. 0,7A	ca. 25Ω	The current is regulated by pulse width modulation (PWM). Reference voltage of the PWM signal: 48V	1+2

Remark: The switching valves are initially regulated to the higher starting current I_1 and then to the lower operating current I_2.

Copyright protected. No part of this manual may be reproduced in any form. Copyright reserved.

https://truckmanualshub.com/

Additional hydraulics valve block

Id. no.: W8 424 581 (single add. hydr.)
Id. no.: W8 424 582 (double add. hydr.)

Either the single valve block (1) or the double valve block (2) is used, depending on the additional hydraulics used.
The switching valves (3-6) are for selecting the direction.
When a valve block is used, a valve block for "reach carriage with preparation for additional hydraulics" is also needed (see sheet no. N14).

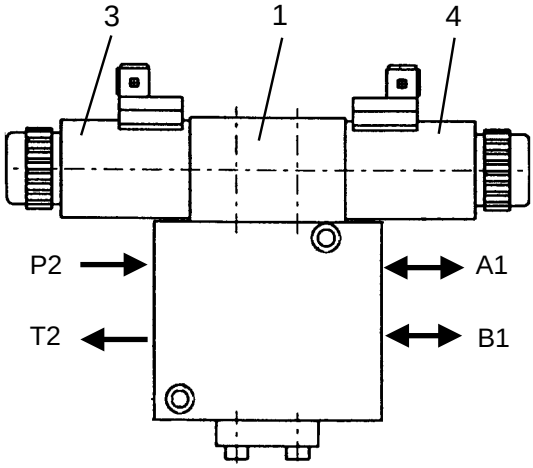

1/0195

Electrical data:

Voltage	Current	Resistance	Comment
U_1 ca. 24V	I_1 ca. 1A	ca. 25Ω	The current is regulated with pulse width modulation (PWM), Ref. voltage of the PWM signal: 48V
U_2 ca. 17V	I_2 ca. 0,7A	ca. 25Ω	

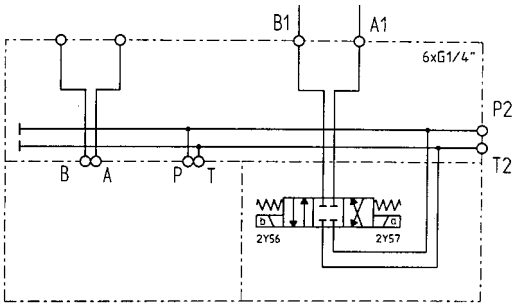

1/0196

Remark: The switching valves are initially regulated to the higher starting current I_1 and then to the lower operating current I_2.

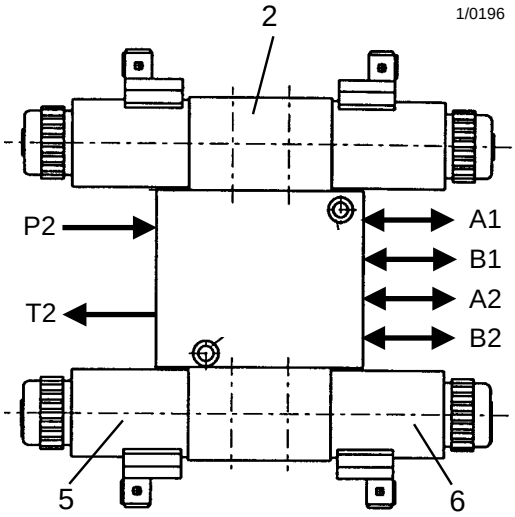

1/0191

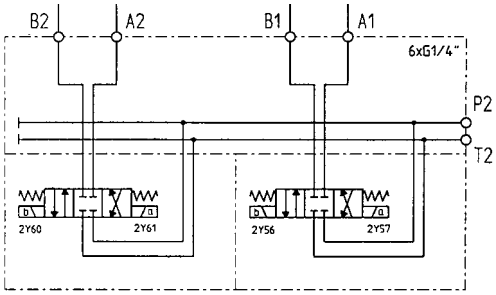

1/0197

Copyright protected. No part of this manual may be reproduced in any form. Copyright reserved.

https://truckmanualshub.com/

Pre-pressure valves, side shifting

Id no.: W8 422 377 (SVC 46F - 30 bar)
Id no.: W8 425 703 (SVC 46F - 15 bar)

A 15 bar (1) and 30 bar (2) pre-pressure valve are used in connection with the chassis valve block version 1 (see sheet no. N7) for the reach function.
These are mounted directly at the oil inlet to the reach cylinder. This means that the cylinder is always under pre-pressure. This prevents air building up in the reach cylinder when the brakes are suddenly applied during simultaneous reaching and travel. Air in the reach cylinder would cause "play" in the reach carriage.

1/0198

Remark: From version 2 of the chassis valve block (see sheet no. N7), the pre-pressure valves are no longer used, since the valve block has been modified with relation to this.

The pre-pressure is pre-set with screw measurement "X" on the valve cartridge (3) :
X= 17mm -> 30 bar
X= 13mm -> 15 bar

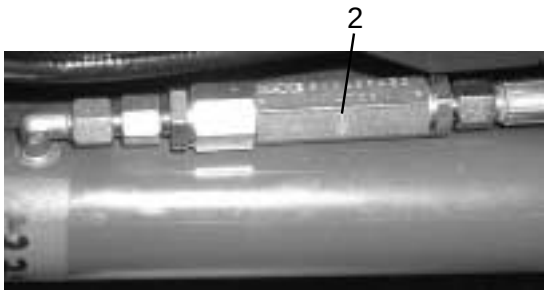

1/0199

Adjusting procedure:

- Release the threaded pin (4) (securing element).
- Turn the screw (5) in or out until measurement "X" is set.
- Tighten the threaded pin (4).

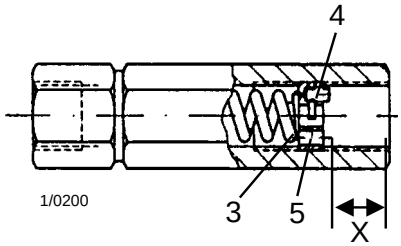

1/0200

Remark: If the pre-pressure valves are fitted at a later date, the parameters for the reach pump speed must be increased by approx. 1V and the max. values for the proportional valves for reach must be increased by approx. 100 mA.
The purpose of this is to optimise the noise emission and so that the same reach speeds are achieved (see sheet. V20-22).

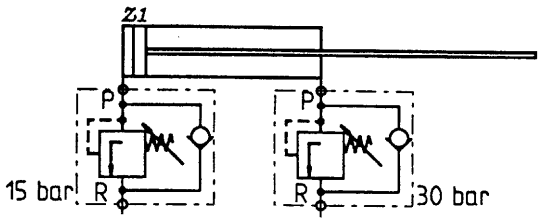

1/0201

Copyright protected. No part of this manual may be reproduced in any form. Copyright reserved.

https://truckmanualshub.com/

Line break protection

Id. no.: see table on N21

General

The line break protection (LBS, 1+2) prevents uncontrolled, accelerated movement by a loaded hydraulic consumer (i.e. a drop), if the hydraulic back pressure is lost in the event that a pressurized lead or connection breaks.

Remark: Two different types of LBS are used. LBS1 is adjustable and LBS 2 is not adjustable.

The line break protection is screwed directly into the pressure oil inlet and outlet of the hydraulic consumer that is to be protected (see also plan of hydraulic system, Id. no. W8 392 628).

The valves used are plate valves. Their valve screw is lifted from the valve seat by a spring when they are in the home position, leaving the flow-through cross section free.

The flow resistance and blockage effect at the valve screw in the direction of flow B --> F (operating or initiating direction) have less force during normal operation than the counterforce of the spring. The valve remains open.

If the flow current increases in the event of an emergency due to the driving load, the force of the flow becomes greater than the force of the spring, and the valve closes immediately.

Remark: In order to remove the LBS 1 from the lifting cylinder, you must use the special tool with Id. no. W8 044 065 (3).
LBS 2 can be removed with a normal hexagon socket screw key.

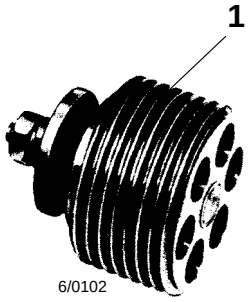

6/0102

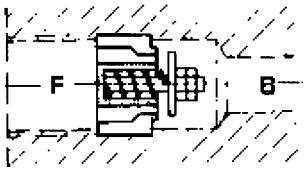

6/0103

1/0202

Symbolic drawing

simplified

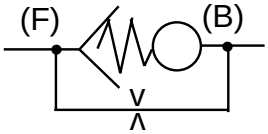

detailed

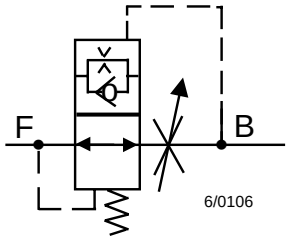

6/0106

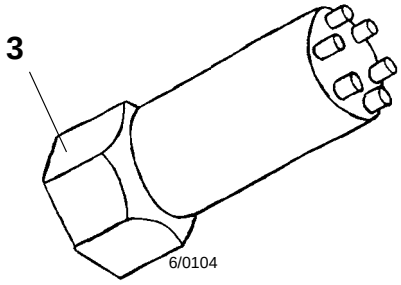

6/0104

Copyright protected. No part of this manual may be reproduced in any form. Copyright reserved.

https://truckmanualshub.com/

Line break protection

Valve for lowering the load slowly

The valve plate includes a diaphragm hole (3) through which, depending on the size of the load, a stream of oil can flow when the system pressure is released. This means that the load can be lowered slowly to the ground.

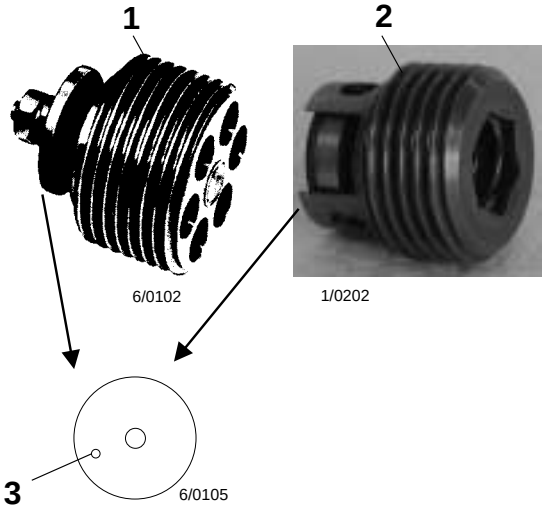

Remark: The gap width S determines the point at which valve 1 is triggered. This setting is made by the manufacturer and must on no account be altered. The width of the gap is only provided here to help you decide whether the right line break protection is installed. In version 2 of the LBS, this gap width is fixed and cannnot be altered.

Different line break protection devices are installed, depending on the type of mast (see table and plan of hydraulics).

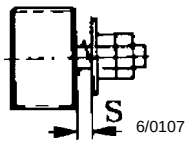

Used in	Name on hydraulics plan	Type of LBS1	Valve LBS2	Gap width for LBS1 in mm	Id no.	Type used
FM 12 FM 14/17 to 2900 mm height	S15 S16 S17 S18	3C-0.5-52 3C-0.5-35 3C-1.0-48 3C-2X1.2-70	R1/2-52-d=0.5 R1/2-35-d=0.5 R1/2-48-d=1 R1/2-70- d=2x1.2/1x1.7	1.2 0.7 1.1 1.9	W8 417 847 W8 417 448 W8 417 845 W8 417 898	1+2 1 1+2 1+2
FM 20 FM 14/17	S9 S10	3C-0.8-40 4C-1.5-90	R1/2-40-d=0.8 R3/4-90-d=1.5	0.8 1.5	W8 414 776 W8 414 779	1+2 1+2

l / min

Hole in valve plate

Remark: The "l/min" specification and the hole dimensions are stamped into the valve plate.
The size 3C indicates a 1/2 inch thread, 4C is a 3/4 icnh thread.
The LBSs "S13" and "S12" are only used from a mast height of 3700 mm.

Copyright protected. No part of this manual may be reproduced in any form. Copyright reserved.

https://truckmanualshub.com/

Load holding valve
(attachment for fork tilting)

Id. no.: W8 420 228 (LHK 22F-160)

With the "fork tilting" option (attachment for fork tilting), an additional load holding valve (1) is used. This is mounted on the fork holder.
When the fork tilts downwards, the oil flowing out of the tilting cylinders has to pass through the pre-pressure valve (2) through connection "AV". This does not open until a pressure of 160 bar has been reached.
The oil can flow back via connection "AF".
The opening pressure of 160 bar is set at the adjusting screw (3) in the factory. This ensures that the fork prongs never make an uncontrolled movement, even under the rated load.

Remark: If the fork prongs move upwards on their own, this is caused by an internal leaking control piston in the distributor block.
In this case, the entire valve block (1) must be replaced.

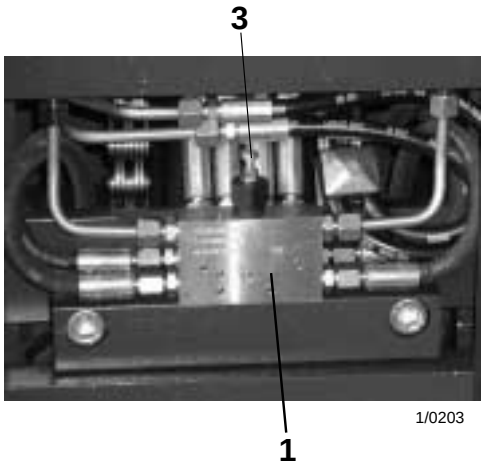

1/0203

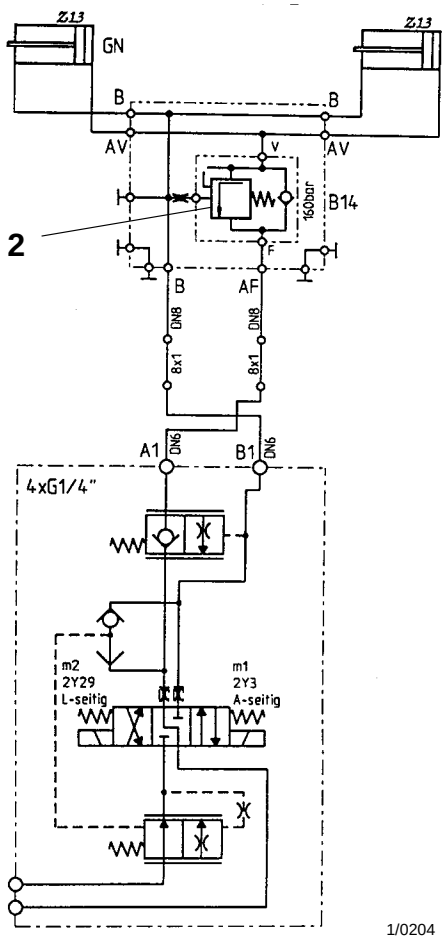

1/0204

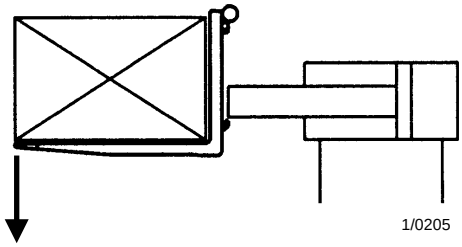
1/0205

Copyright protected. No part of this manual may be reproduced in any form. Copyright reserved.

https://truckmanualshub.com/

Pump unit

General

The pump unit (1) is below the driver's seat in the front corner.
It can be accessed by opening and swivelling up the door to the controls compartment (2).

Remark: Depending on the pump size (4), there may be up to 3 different units in use! (see sheet no. N31)

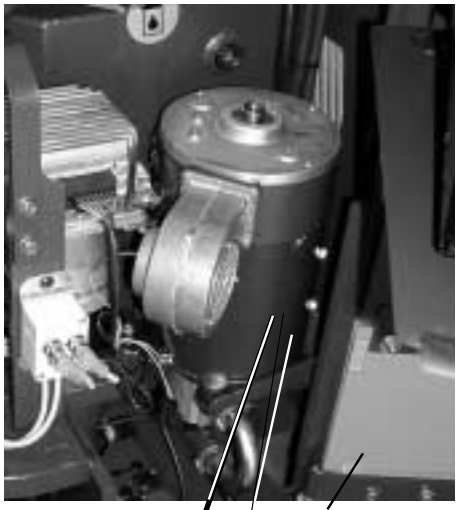

1/0206

The pump unit consists of a force-ventilated 48V series wound motor (3) (see sheet no. N25), the speed of which is controlled by the combined travel and pump controller.

As a result, the volume of oil delivered by the flange-mounted, externally-toothed gear pump (4) (see sheet no. N31) is proportional to the drive level of the pump motor.

Speed transmission between the motor and pump is achieved with the claw coupling (5). The seal between the motor and pump is made with an o-ring (6).

The pump unit is fastened to the chassis with 3 rubber bearings (7) and a support buffer (8) for noise reduction.

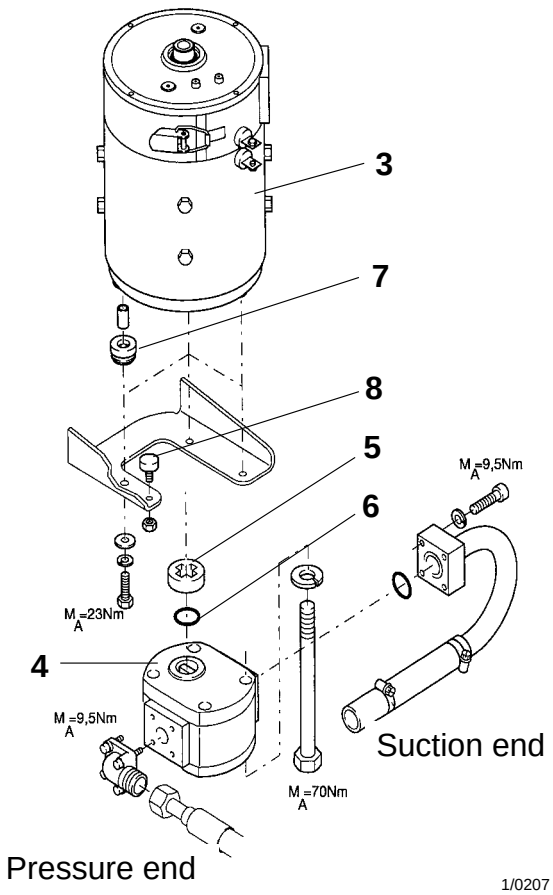

1/0207

Technical data

Model (motor):	GP 116 - F6
Model (pump):	WSP 20.11.2 / 14.0 / 16.0
Motor type:	Series wound
Voltage:	48V
Current:	310A
Output:	12KW
Speed:	2550 rpm
Protection class:	IP 20
Insulation class:	B / F
Motor id. no.:	W8 409 304
Pump Id. no.:	W8 424 456 / 424 457 / 424 458

Copyright protected. No part of this manual may be reproduced in any form. Copyright reserved.

https://truckmanualshub.com/

Pump unit

Removal

- Make the pump accessible (see sheet no. N23).
- Fully extend the mast.
- Pump the hydraulic oil out of the tank via the oil filler screw (1) (**approx. 25 l**).
- If fitted, move the electrical seat adjustment into the top end position.
- Switch the vehicle power off.
- Lay absorbent cloths underneath the unit.
- Dismantle the entire suction side of the pump, complete with angled flanged t-pieces (2).
- Dismantle the pressure side of the pump at the union nut (3).
- Mark the electrical connections at the motor and disconnect them.
- Dismantle the radial fan from the pump unit.
- Screw the eyebolt (4) into the pump unit.
- Release the pump unit at the 3 rubber bearings (5).
- Remove the pump unit vertically upwards, using the "pulley method", described for the drive motor (see sheet no. A10,11).

To **install** the pump unit, follow the instructions above in reverse order. Ensure that the screws are tightened to the correct torque (see picture).

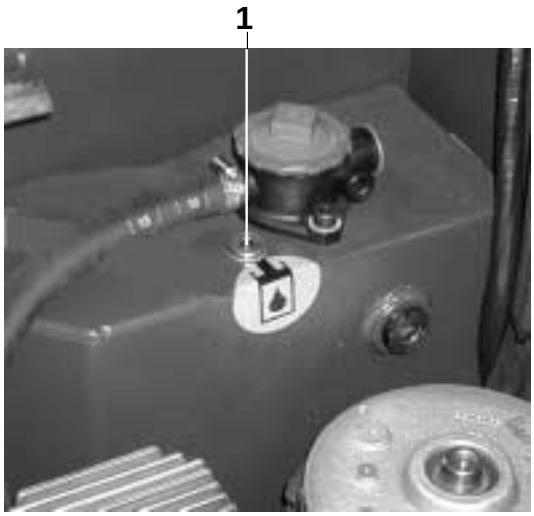

1/0208

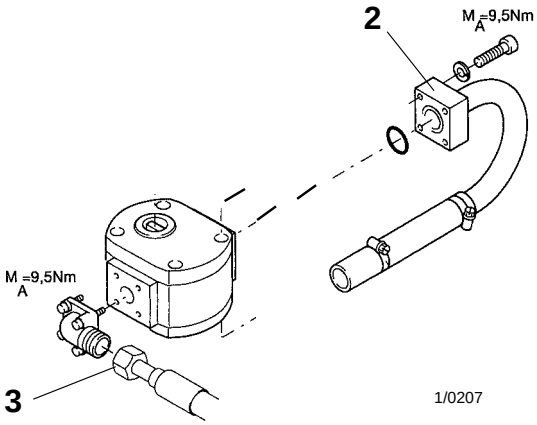

1/0207

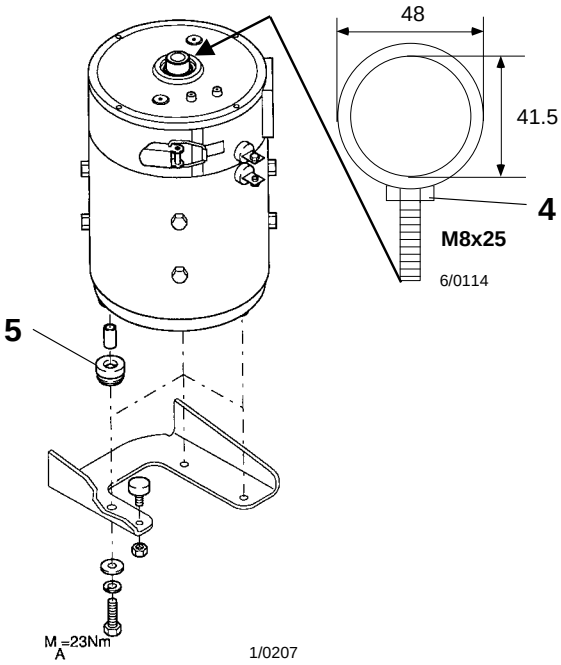

1/0207

Copyright protected. No part of this manual may be reproduced in any form. Copyright reserved.

https://truckmanualshub.com/

Pump unit

Pump motor, general

Id. no. W8 409 304

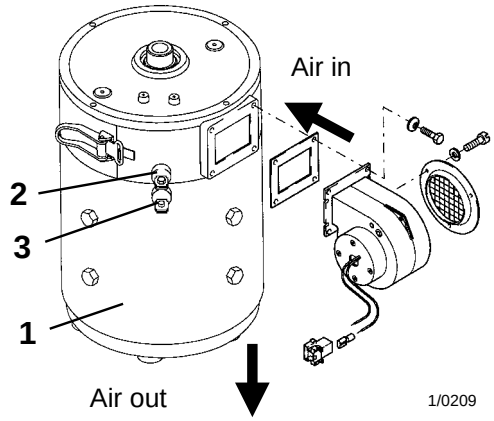

The pump motor (1) used in this vehicle is a 48V force-ventilated seies-wound motor.

The motor is fitted with carbon brush monitoring and a temperature sensor (see sheet no. N26, 27). The air current flows from the top to the bottom.

When different voltages are applied o the terminals A1 (2) and D2 (3), the speed of the motor is controlled.

Typical values are:

Remark: The values listed below can be read out from the tester menu of the software Win-PulsE (see sheet no. V52) and are parameter-dependent (LAS-module).

Function	Motor voltage	Specified setpoint
Lifting main lift	45 V	10.0 V
Reach LS	15 V	6.0 V
Reach DWS	15 V	5.5 V
Reach damping LS	3.5 V	3.0 V
Reach damping DWS	5.0 V	3.9 V
Tilting DWS	9.0 V	4.5 V
Tilting LS	15.0 V	4.2 V
Mast transverse shift	9.5 V	4.0 V

(LS = load side; DWS = drive wheel side)

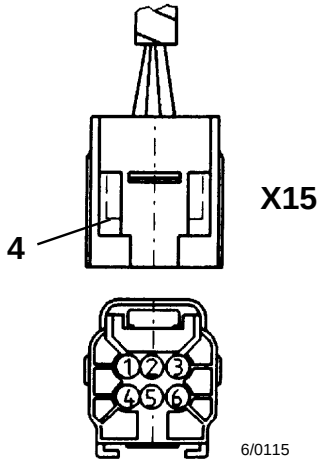

Pin assignment

1	Temp. sensor signal 0V = OK
2	Carbon brush signal 0V = OK
3	--
4	Temperature sensor 0V supply
5	Carbon brush 0V supply
6	--

The signals from the temperature sensor and the carbon brush monitor are sent on to the travel and pump controller via connector X15 (4).

The motor has ball bearings on both sides. At the pump side, the shaft end is sealed with a shaft sealing ring.

Copyright protected. No part of this manual may be reproduced in any form. Copyright reserved.

https://truckmanualshub.com/

Pump unit

Carbon brush monitoring

The carbon brush yoke (1) in the pump motor is fitted with a monitoring switch (normally closed contact) (2). When the residual brush length is reached, this switch is opened by the brush spring.

This switching signal is transmitted to the FPS via signal leads (3) and (4).

The FPS sends the error message "FE31" to the display via the LAS-module (see sheet no. M31). There is no resulting reduction in performance.

Remark: All 4 carbon brushes are monitored (the signal contacts in the brush yoke are connected in series).

Note: When the brush spring is applied to the monitoring switch, this causes the spring pressure on the carbon brush to be significantly reduced.
As a result, the carbon brush begins to spark, and there is a risk that the commutator can catch fire. For this reason, it is absolutely essential to replace the carbon brushes immediately. The entire set of carbon brushes (4 brushes) must always be replaced together!

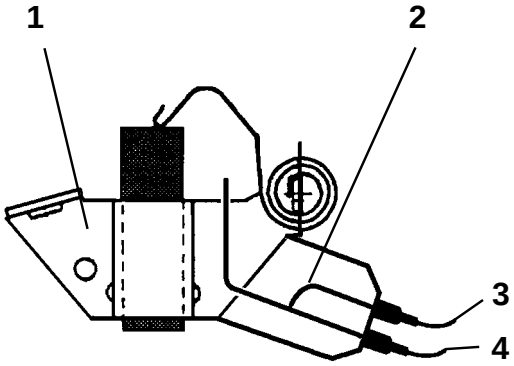

Carbon brush, new 6/0172

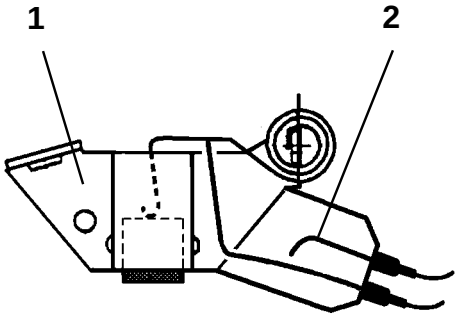

Carbon brush, worn 6/0173

Copyright protected. No part of this manual may be reproduced in any form. Copyright reserved.

https://truckmanualshub.com/

Pump unit

Temperature monitoring

The temperature of the pump motor is monitored. If the temperature sensor (1) is triggered (switching contact), the travel and pump controller reduces the power supply to the motor until the temperature drops below the critical point again.

At the same time, the error message "FE30" is sent to the display via the LAS-module (see sheet no. M31).

The temperature sensor (1) used here is a bi-metallic sensor, i.e. when its limit temperature is reached, its switching contact is opened (0V lead is broken).

The temperature sensor (1) is integrated in the brush yoke and can not be replaced separately.

The temperature sensor switching point is 160°C

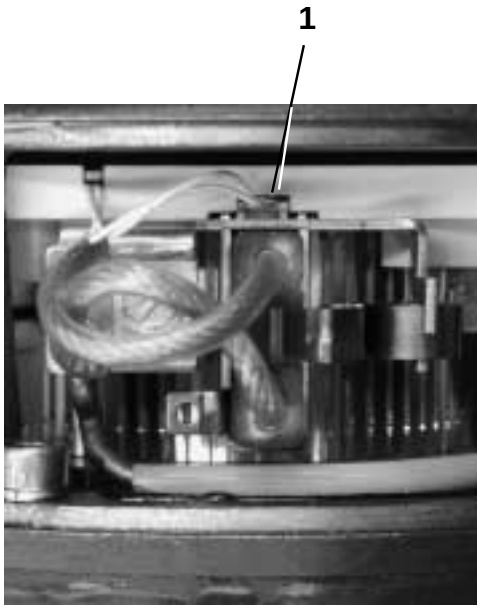

0/0346

6/0056

Pump motor temperature sensor

Copyright protected. No part of this manual may be reproduced in any form. Copyright reserved.

https://truckmanualshub.com/

Pump motor

Dismantling the motor

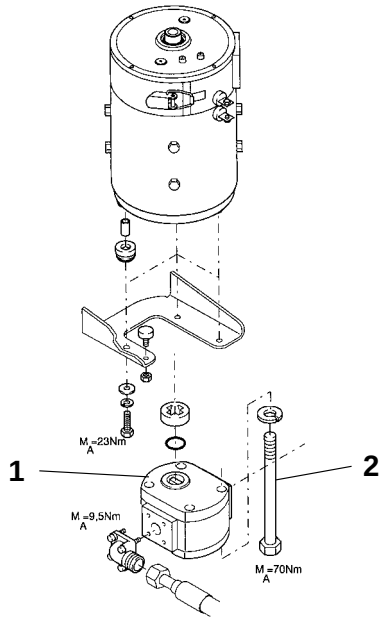

- Remove the pump unit (see sheet no. N24).
- Remove the hydraulic pump (1) by releasing the 4 screws M10x115 (2).
- Remove the tensioning belt (3).
- Disconnect the electrical connection between the field coil (4) and the brush yoke (5).
- Remove the circlip (8).
- Release the 4 B-end shield screws M6x20 (9) and pull the rotor (10) including the B-end shield (11) out of the stator and A-end bearing.
- Pull the B-end shield (11) off the rotor shaft with puller device.
- The B-end deep-groove ball bearing (12) can be pushed out after the circlip (13) has been removed.
- Release the 8 M8x30 screws (14) and remove the A-end shield (15) from the stator (16).
- Push the A-end deep-groove ball bearing (17) and shaft sealing ring (18) out of the end shield.

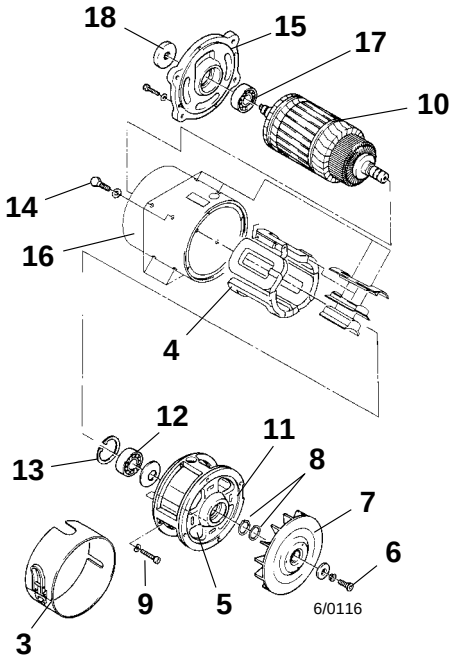

To **assemble** the motor, follow the instructions above in reverse order.

On installation and when changing the shaft sealing ring (18), ensure that the installation position is correct.

The sealing lip must point towards the pump (19).

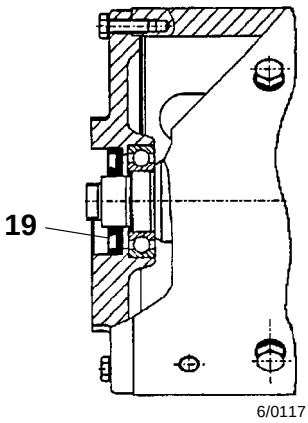

Copyright protected. No part of this manual may be reproduced in any form. Copyright reserved.

https://truckmanualshub.com/

Pump unit

Replacing the carbon brushes

Id. no. W8 409 243

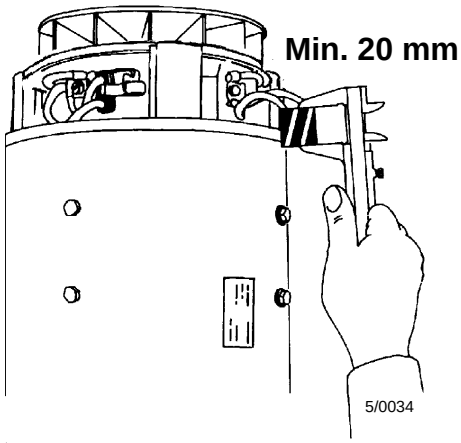

The carbon brushes must be replaced when a residual length of **20 mm** has been reached, which is equivalent to wear of approx. 50 %. They must also be replaced when the carbon brush monitor has responded (see sheet no. N26)

Length of a new carbon brush: 40 mm
The entire set of carbon brushes must always be replaced (4 brushes)

Removal

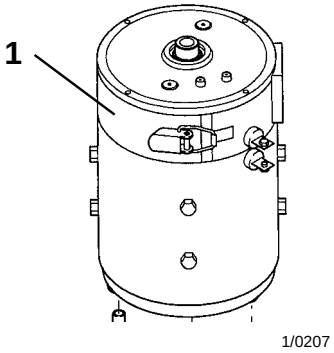

- Pull out the battery plug.
- Make the pump unit accessible (see sheet no. N23).
- Remove the side covers at the left so that the mounting opening for changing the carbon brushes is accessible.
- Remove the tensioning belt (1) from the pump motor.
- Lift the brush spring (2) and pull the carbon out at the connecting lead (3).
- Disconnect the connecting lead (4)
- Clean out the commutator space (blow out).

Note: The carbon dust is hazardous to the health. Always wear a protective mask!

- Insert the new carbon brushes.

Remark: The motor should not be run at full power directly after the brushes have been replaced. The carbons run in relatively quickly under a low load.

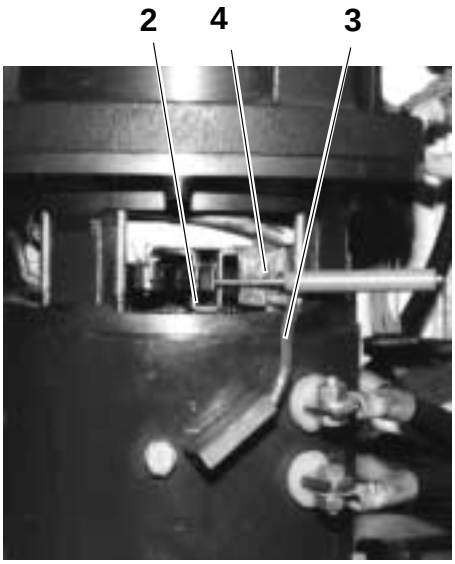

Copyright protected. No part of this manual may be reproduced in any form. Copyright reserved.

https://truckmanualshub.com/

Pump unit

Checking the brush springs

Id. no. W8 405 853

Brush springs which are not adequately pre-tensioned cause the commutator to burn or cause the carbon brushes to wear prematurely.

Ensure that the carbon brushes move easily in the shaft.

Copyright protected. No part of this manual may be reproduced in any form. Copyright reserved.

https://truckmanualshub.com/

Pump unit

Hydraulic pump

Id. no.: see table

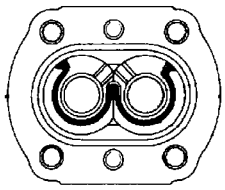

The hydraulic pump (1) is an externally toothed gear pump. Once the pump unit has been removed (see sheet no. N 24), the pump can be detached from the motor at the 4 fastening screws M10x115 (2).

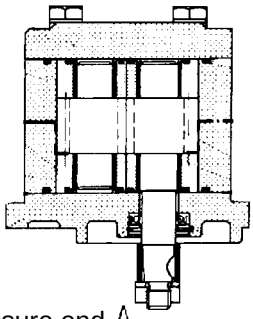

6/0119

Pumps with different delivery outputs (cm^3/revolution) are used, according to the type of mast:

Mast/vehicle	Pump type	Id. no.	Delivery output cm^3/ rev.
FM12 FM 14/17 height ≤ 2900mm	WSP 20.11,2	W8 424 456	11
FM20	WSP 20.14,0	W8 424 457	14
FM14/17 Height >2900mm	WSP 20.16,0	W8 424 458	16

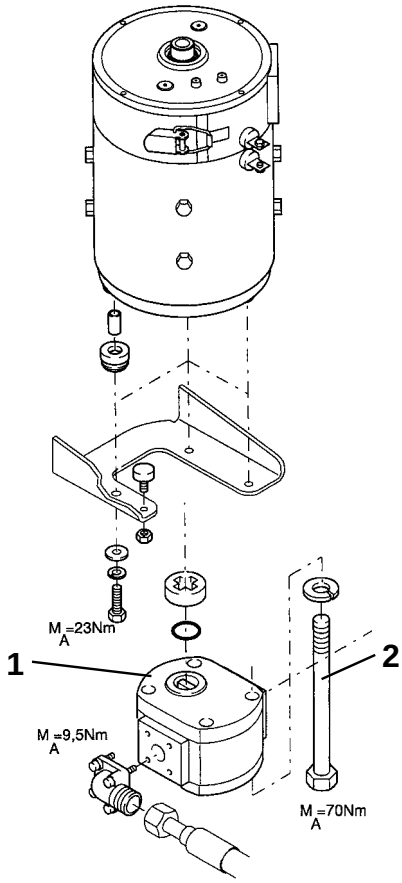

1/0207

Remark: The pump type is stamped into the pump housing. The height is the measurement from the upper edge of the extended mast to the floor.

Copyright protected. No part of this manual may be reproduced in any form. Copyright reserved.

https://truckmanualshub.com/

Tank indicator

Id. no. W8 411 677

Under the driver's seat is the tank, with an oil sight glass (1). The oil level in the tank can be read off here.

Use a torch when checking the level.

Always check the oil indicator:

1. On commissioning, after the appliance has been installed
2. At scheduled maintenance dates
3. When the hydraulic system has been opened at any point.

Remark: To make the reading, lower the mast fully. Retract the side shift carriage completely and tilt the mast forward as far as it goes.

On commissioning, fill the tank up to the centre of the sight glass and execute all hydraulic movements to their maximum extent, in order to fill the cylinders and hoses. Then bleed all air out the cylinders and fill the tank up again to the centre of the sight glass with the equipment in its home position.

Maximum oil level: Centre of sight glass
Minimum oil level: Lower edge of sight glass

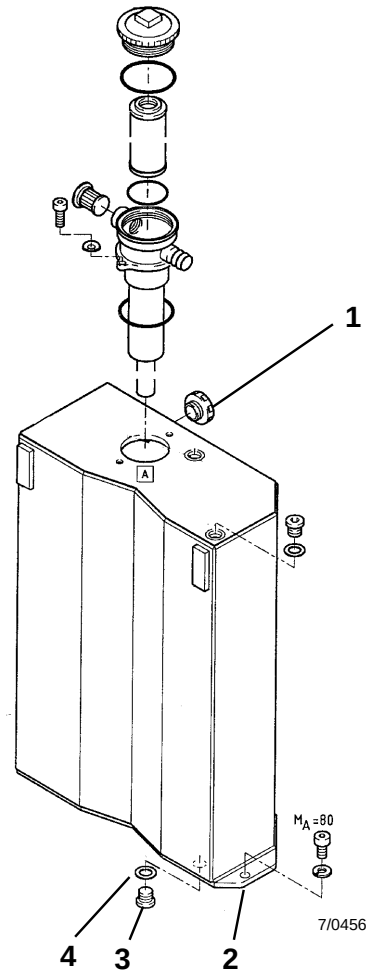

Copyright protected. No part of this manual may be reproduced in any form. Copyright reserved.

Tank

Id. no. W8 380 465

The tank for the hydraulic oil is located underneath the driver's seat. It is screwed directly to the chassis (2). The tank volume is 25 l (centre of the sight glass). This is sufficient for all mast movements.

On the underside of the tank is the oil drainage screw (3). This can be accessed by pulling out the battery.

When oil has been drained off through this drainage screw, you must use a new aluminium sealing ring (4) (Id. no. W8 006 197).

Remark: Oil change interval once a year or every 2000 operating hours.

Oil types used	ID number
HLP46	W8 036 912
HVLP46	*W8 036 916
HVI24	*W8 036 916
*Cold store	

https://truckmanualshub.com/

Runback filter

Id. no. W8 424 325 (filter cartridge)

Application

1. Filtering oil that runs back in the system
2. Filtering the air that enters and leaves the tank

The filter is mounted on the top of the oil tank (6). The filtered oil leaves the tank below the oil level, through a hose which is mounted on the filter cup (1). This prevents the oil foaming.

At the opposite side of the hose connection is an air filter (2) made of pressed aluminium meshing. This is for ventilating the tank.
The filter cartridge used (3) consists of a paper filter (filter fineness 10 µm). It cannot be cleaned.

The oil can flow back into the tank unfiltered through a bypass valve in the lid (4) in the event that the filter is too heavily soiled.

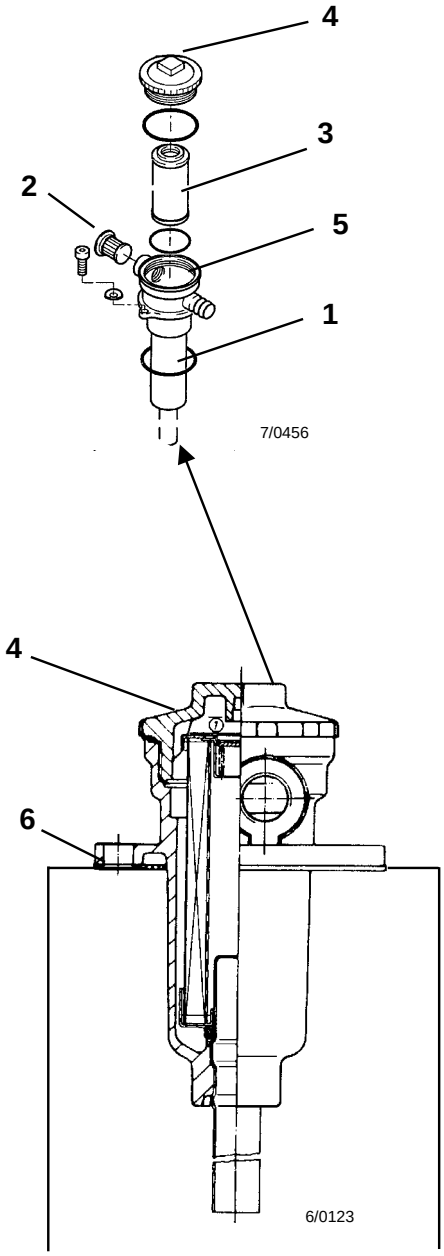

Replacing the filter

- Switch off the hydraulic system. There must be no pressure exerted on the filter at the pressure side.
- Unscrew the lid (4).
- Pull out the filter cartridge (3).
- Clean the filter cup (5) e.g with cleaner's naphtha or petroleum.
- Insert a new filter cartridge.
- Check the sealing rings and replace if necessary.
- Oil the lid lightly and screw it in place.

Remark: The filter should be replaced at the latest after 500 operating hours or once a quarter.

Copyright protected. No part of this manual may be reproduced in any form. Copyright reserved.

https://truckmanualshub.com/

Contents

Sheet no.

Lubrication plan .....R 2
Lubricants .....R 3
Taking out of service, disposal .....R 4

Copyright protected. No part of this manual may be reproduced in any form. Copyright reserved.

https://truckmanualshub.com/

Lubrication plan

1 Toothed gears with all-purpose grease.
every 3 months

2 All bolster bearings with all-purpose grease.
every 12 months

3 Lubricate all moving parts with oil.
every 3 months

4 Change the brake fluid.

every 12 months

5 Change the hydraulic oil.

every 12 months

6 Change the gear oil.

every 12 months

7 Lubricate chains with chain lubricant

every 3 months

8 Idling wheel bearing with all-purpose oil

every 12 months

9 Keep the running surfaces in the mast profiles free of corrosion with profile spray.

every 3 months

10 With mast or transverse fork shift, grease the sliding surfaces with all-purpose grease

every 3 months

11 Lubricate the sliding surfaces for the battery frame with all-purpose grease
every 3 months

Remark: For lubricant types and viscosity, see sheet no. R 3.

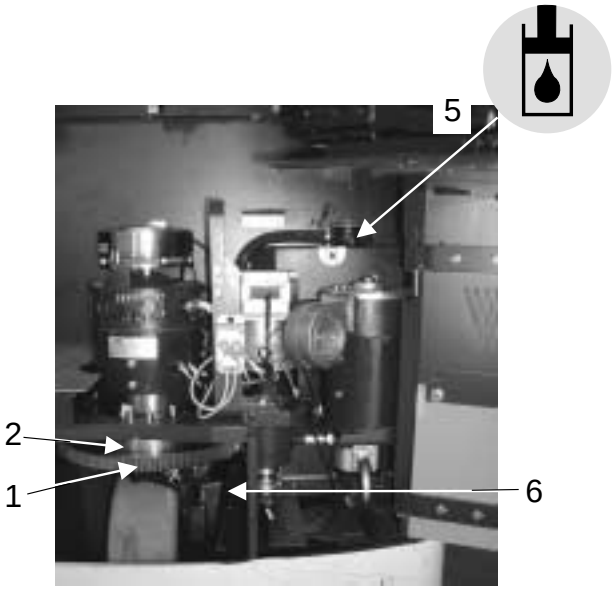

1/0102

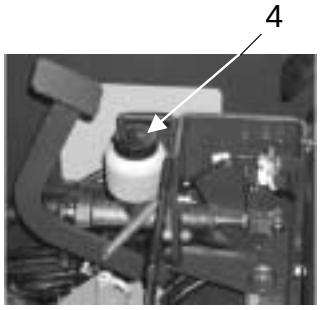

1/0103

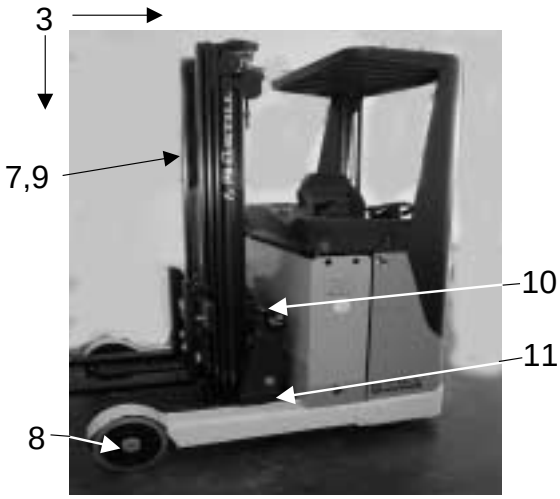

1/0104

Copyright protected. No part of this manual may be reproduced in any form. Copyright reserved.

https://truckmanualshub.com/

Lubricants

Hydraulic oil	HLP 46 or	DIN 51524/T2	Id. no. W8 036 912
Hydraulic oil (cold store)	HVLP 46 HVI 24	DIN 51524/T3	Id. no. W8 036 916
Volume : approx. 25 l			
Gear oil	SAE 80		Id. no. W8 036 925
Gear oil (cold store)	SAE 75W - 90 (partly synthetic)		Id. no. W8 036 929
Volume: approx. 3.6 l			
Chain lubricant	Stabylan 2001		Id. no. W8 010 100
Chain lubricant (cold store)	Syntesco		Id. no. W8 036 220
Lubricants for anti-friction bearings and other lubrication points			
	Beacon 2		Id. no. W8 010 107
	Acedo X 2 (cold store)		Id. no. W8 050 076
Profile spray for mast, sliding surfaces, toothed racks			
	Ceplattyn 1612 (also for cold store)		Id. no. W8 052 125
Brake fluid			
	ATE SL DOT 4 / DOT 3		Id. no. W8 034 957
Other special lubricants for cold store:			
For all moving parts, for screw connections, union nuts	Kompranol Spray N74		Id. no. W8 050 077

Copyright protected. No part of this manual may be reproduced in any form. Copyright reserved.

https://truckmanualshub.com/

Taking out of service,
Disposal

If the vehicle described here has to be taken out of service, it is important to ensure that all the components are disposed of in accordance with the regulations.
In particular the fuels used in the vehicle must be either recycled or disposed of in the correct manner.

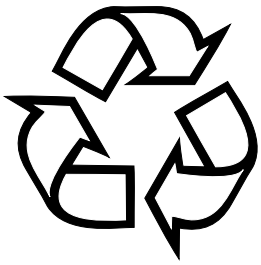

6/0597

Copyright protected. No part of this manual may be reproduced in any form. Copyright reserved.

https://truckmanualshub.com/

Contents

Sheet no.

General ..... V 2

Making a connection ..... V 3

Servicemaster
- Menu guide ..... V 4
- Commissioning the steering ..... V 5
  - Commissioning check ..... V 7
  - Correcting the straight-on position ..... V 7
  - A/D converter calibration ..... V 8
  - Adjusting the flutter ..... V 10
  - Reverse steering ..... V 12
- Commissioning the hydraulics ..... V 13
  - Commissioning with standard parameter set (initial commissioning) ..... V 14
  - Recommended values for commissioning ..... V 20
  - Commissioning with a vehicle-specific file ..... V 23
  - Commissioning with LAS-module data (data-upload) ..... V 24
- Loading parameters ..... V 25
- Diagnosis ..... V 26
  - Error memory ..... V 27
  - List of errors ..... V 28
  - Setpoint signals for the hydraulics ..... V 30
  - Setpoint/actual value signals for steering ..... V 31
  - Input switching signals, LAS-module ..... V 32
  - LAS software update ..... V 33

WinPulsE
- Menu guide ..... V 37
- Starting/stopping connection to the FPS ..... V 38
- Reading data out of the FPS (receive from RAM) ..... V 39
- Saving/opening a data set on computer
  - Saving data with "Menu" (Save as...) ..... V 40
  - Saving data with "Parameters" (Save as...) ..... V 41
  - Opening (Open) a data set (file) ..... V 42
  - Saving (Save) a data set (file) ..... V 44
- Saving data in the FPS
  - Sending a data set (File) directly to the FPS (Tx from file) ..... V 45

Copyright protected. No part of this manual may be reproduced in any form. Copyright reserved.

https://truckmanualshub.com/

Contents

Sheet no.

- Changing the parameters (Parameter Change)
  - Reading parameters out of the FPS and changing them (Receive from RAM) ....V 46
  - Saving parameters in the FPS (Transmit to EEPROM)....V 47
  - Restoring parameters (Restore RAM) ....V 47
  - List of parameters....V 48
- Changing the configuration (Set Configuration)
  - Changing the configuration....V 49
  - Storing the configuration in the FPS (Transmit to EEPROM)....V 50
- Reading in the accelerator pedal (Programm VACC)....V 51
- Test function (Tester)....V 52
  - Guide to test functions....V 53
- Reading out the error memory (Alarm Logbook) ....V 55
  - Table of error codes ....V 56
- Changing the hour counter (Set Hour Counter)....V 59
- Other functions
  - Closing the program (Exit)....V 60
  - Configuring the software (Configuration)....V 60
  - Keyboard commands....V 61

Copyright protected. No part of this manual may be reproduced in any form. Copyright reserved.

https://truckmanualshub.com/

General

There are two software products available for diagnosis and setting parameters:
- FM-Servicemaster (Fig. 1)
- WinPulsE (Fig. 2)

The FM-Servicemaster is needed for the LAS-module and the steering.

Fig. 1 1/0080

Fig. 2 1/0081

It can be used to make the following adjustments in the LAS module:

- Setting the parameters for the individual hydraulic axes (speeds)
- Setting the parameters for general vehicle data
- Activating/deactivating optional functions
- Reading/deleting the error memory
- "Teaching-in" the joystick/4-lever system
- Reading out data and storing as a file
- Software-update of the module
- Diagnosis

The following is possible for the steering:

- "Teaching-in" the steering (setpoint/actual value potentiometer)
- Correcting the straight-on position of the drive wheel
- Switching over to reverse steering (from V1.11 of the Servicemaster software)
- Diagnosis of the setpoint/actual value potentiometer (from V1.11)
- Correcting "flutter" in the setpoint potentiometer (from V1.11)
- "A/D-converter" calibration (from V1.11)

The WinPulsE software is needed for the FPS for the following

- Changing travel parameters (speeds, acceleration/deceleration)
- "Teaching-in" the accelerator pedal
- Programming the hour counter
- Reading/deleting the error memory
- Reading out data and storing as a file
- Diagnosis

Copyright protected. No part of this manual may be reproduced in any form. Copyright reserved.

https://truckmanualshub.com/

Making a connection

- Use the connecting lead (2) to connect the notebook (1) to the vehicle at diagnosis socket X99 (3) via serial interface COM1 (Fig. 1).

Remark: The connecting lead (2) is part of the interface adapter, Id. no. W8 406 464.
Alternatively, a lead (4) can be used in which the 9-pin sub-D socket and the 9-pin connector are connected 1:1 (Id. no. W8 397 550).

Fig. 1 1/0082

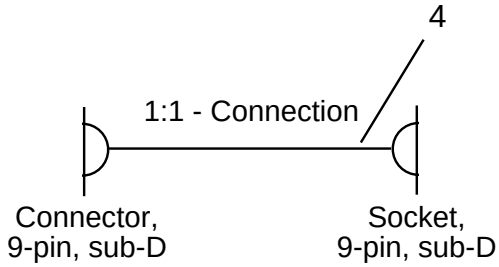

- Switch on the vehicle.
- Depending on whether you wish to communicate with the LAS-module or the steering or with the FPS, start the relevant software (see sheet. V2).
- The diagnosis interface X99 is allocated automatically to the relevant component, depending which software has been started on the notebook.

Remark: On the first vehicles, the diagnosis socket X99 (5) was located in the area of the key switch behind a cover (Fig. 2).

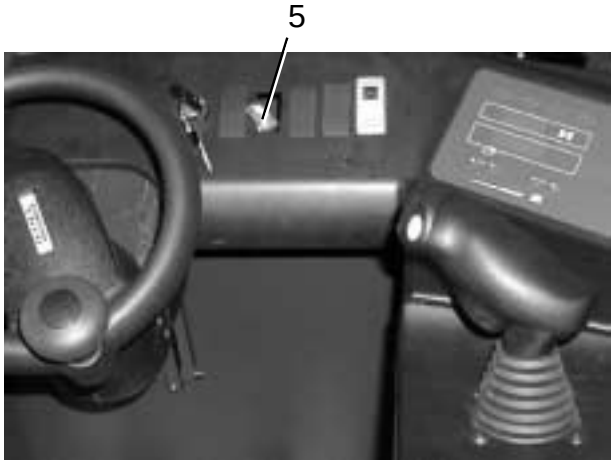

Fig. 2 1/0083

Copyright protected. No part of this manual may be reproduced in any form. Copyright reserved.

https://truckmanualshub.com/

Servicemaster

Menu guide

Commissioning

After you have selected Inbetriebnahme (1), you can then choose between Hydraulik (2) and Lenkung (3).
With the Commission hydraulics option (see sheet no. V13), a new LAS-module can be completely set, or, after a joystick or a potentiometer have been replaced in the "4-lever system", the values for the potentiometer can be newly read in (teaching-in function). With the Commission steering option (see sheet no. V5), the steering can be completely set (teaching-in function) and "A/D-converter calibration" and "Adjustment of the flutter" (see sheet no. V10) can be carried out.

Parameters

After you have selected Parameter (4), you can then choose between Daten upload (5) and Datei Laden (6).
With the "Parameters - Upload data" function, all the data is read out of the LAS-module and can be stored in a file (see sheet no. V25).
The "Parameters - Load file" function loads a file that has previously been stored on the computer, in order to transfer it to the LAS module or to make alterations to it (see sheet no. V25).

Diagnosis

Selecting Diagnose (7) opens the submenus Standard (8) and Erweitert (9). With the "Diagnosis - Standard" function (see sheet no. V26), the error memory of the LAS can be edited and the analogue and digital signals that are connected to the LAS-module checked, the potentiometer for the steering checked and a software update for the LAS-module carried out.
The "Diagnosis - Extended" menu point is protected by a password and is not relevant for servicing work.

Extras

In the Extras (10) menu, you can choose between ComPort PC (11) and Info (12).
Under "Extras - ComPort PC", the serial interface can be selected that is used to connect the computer to the LAS-module. The default setting is "ComPort 1".
The Info menu point displays basic information about the software.

Remark: The software can be exited with the X symbol (13) or with the key combination ALT + F4 .

Fig. 1 1/0084

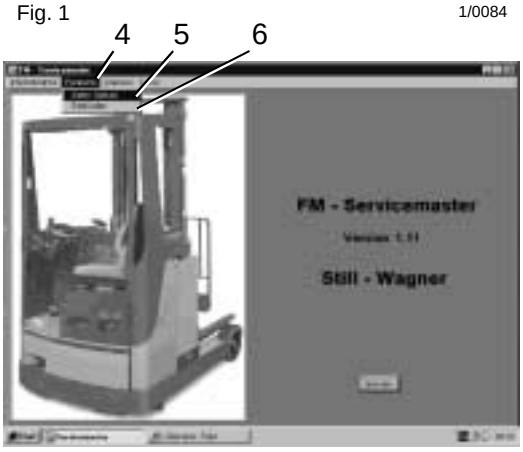

Fig. 2 1/0085

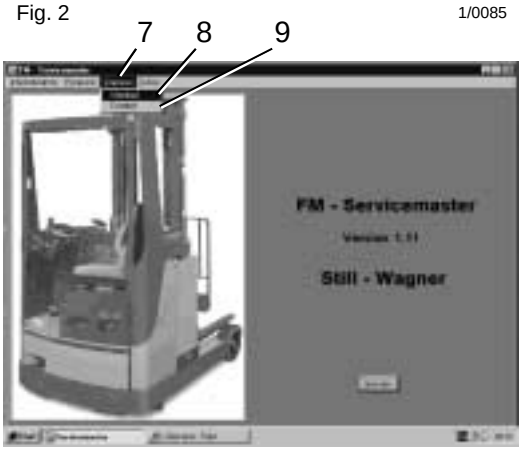

Fig. 3 1/0086

Fig. 4 1/0087

Copyright protected. No part of this manual may be reproduced in any form. Copyright reserved.

https://truckmanualshub.com/

Servicemaster

Commissioning the steering

The steering must be commissioned when one of the following components has been replaced:

- Setpoint potentiometer (see sheet no. B16)
- Actual value potentiometer (see sheet no. B21)
- Steering unit (see sheet no. B11)
- Drive gear (see sheet nos. A15 + B11)

Remark: Before the steering can be commissioned with the software, the individual components must be pre-adjusted mechanically!
For this purpose, see the reference pages provided in brackets above!

If the setpoint/actual value potentiometer or the steering unit have been replaced, the first stage is to calibrate the A/D-converter (see sheet no. V8).

Note: "Teaching-in" must not be carried out on the steering unless the steering detects no errors after the vehicle is switched on (see error code B8).

Procedure for commissioning the steering:
- Select Inbetriebnahme Lenkung (1)
- In the mask which then opens, check that the correction value (2) is set to "Zero". If necessary, correct using the selection fields (3) or overwrite directly with "Zero".
- Select the Teach In starten (4) button.

Remark: If the electro-magnetic brake is open, it is closed automatically.

If the error message "Steering not responding" appears when you select "Start teaching-in", check the following:
- That CAN-BUS is in working order;
- Power supply to steering unit (see sheet no. B6).
If both are OK and no further error codes are shown on the display (see sheet no. B8), the steering unit is faulty and must be replaced.

- Set the drive wheel to the straight-on position as instructed (5) and confirm with the OK button (6).

Note: When OK is pressed, the drive turns automatically to the right (+90°) and the left (-90°). It then stops in this position.

Fig. 1 1/0084

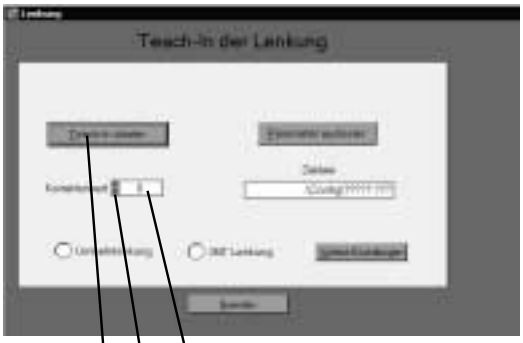

Fig. 2 1/0088

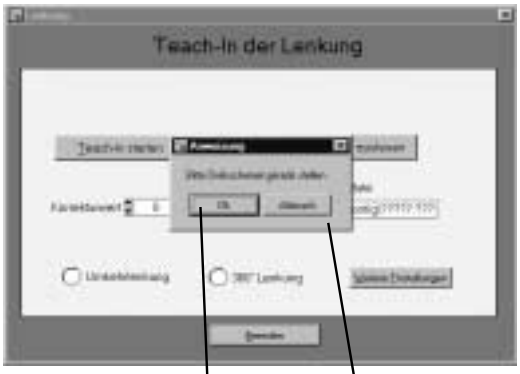

Fig. 3 1/0089

Copyright protected. No part of this manual may be reproduced in any form. Copyright reserved.

https://truckmanualshub.com/

Servicemaster

Commissioning the steering

Remark: If this automatic turning process is stopped automatically by the steering itself and one of the following messages appears on the Servicemaster software, the actual value potentiometer (see sheet no. B20) must be checked and replaced if necesssary:
- Mittelstellung Drehschemel zu klein
- Mittelstellung Drehschemel zu groß
- Drehschemelpotentiometerwert Rechtsanschlag zu klein
- Drehschemelpotentiometerwert Rechtsanschlag zu groß
- Drehschemelpotentiometerwert Linksanschlag zu klein
- Drehschemelpotentiometerwert Linksanschlag zu groß

Fig. 1 1/0084

- Set the steering wheel to the "9 o'clock position" as instructed (see sheet no. B16), and confirm with OK (2).

Remark: If an error message:
- Lenkradpotentiometer "9.00Uhr" zu klein
- Lenkradpotentiometer "9.00Uhr" zu groß

appears on the Servicemaster software, check the setpoint potentiometer and ensure that the 9 o'clock position is correct (see sheet no. B16).

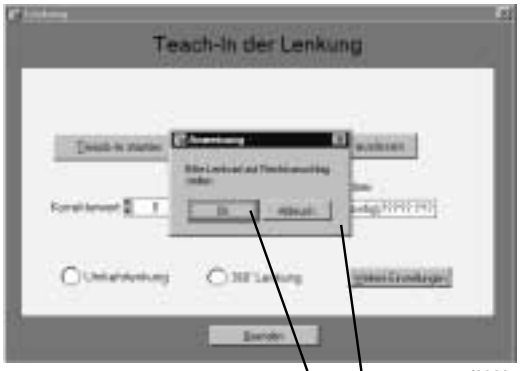

Fig. 2 1/0088

- Turn the steering wheel to the right-hand stop (clockwise) as instructed (3) and confirm with OK (4).

Remark: If an error message:
- Lenkradpotentiometer Rechtsanschlag zu klein
- Lenkradpotentiometer Rechtsanschlag zu groß

appears on the Servicemaster software, check the setpoint potentiometer and ensure that the end position is correct (see sheet no. B16).

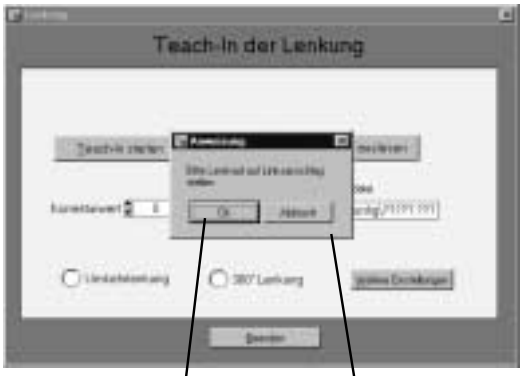

Fig. 3 1/0089

- Turn the steering wheel to the left-hand stop (anti-clockwise) as instructed (5) and confirm with OK (6).

Remark: If an error message:
- Lenkradpotentiometer Linksanschlag zu klein
- Lenkradpotentiometer Linksanschlag zu groß

appears on the Servicemaster software, check the setpoint potentiometer and ensure that the end position is correct (see sheet no. B16).

Copyright protected. No part of this manual may be reproduced in any form. Copyright reserved.

https://truckmanualshub.com/

Servicemaster

Commissioning the steering

- Switch the vehicle off/on as instructed and confirm with OK (2). The newly read-in values from the setpoint/actual value potentiometer are now activated!

Fig. 1 1/0093

Commissioning check

- Turn the steering wheel 4 turns to the left to the mechanical end stop (anti-clockwise). The drive wheel should be in the ≥-90° position (drive wheel visible).
- Turn the steering wheel 4 turns to the right to the mechanical end stop (clockwise). The drive wheel should be in the ≥+90° position (gear visible).

Remark: If the "Umkehrlenkung" (Reverse steering) option is configured (see sheet no. V12), the left/right-hand turning directions of the drive wheel are exchanged.

- The wheel position should now appear on the display in accordance with the drive wheel position and the selected travel direction (Fig. 3).

Fig. 2 1/0084

Correcting the straight-on position

- Turn the steering wheel to the "9 o'clock" position (see sheet no. B16)
- Switch the vehicle off and then on again
- Check the straight-on position of the drive wheel

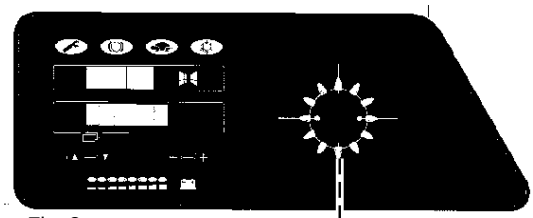

Fig. 3 1/0040

Travel direction DWS and wheel position | Travel direction LS and wheel position

If necessary, correct the straight-on position:
- Start "Inbetriebnahme-Lenkung" (3)
- Change the value in the "Korrekturwert" window (4) positively or negatively with the selection fields (5) or by making a direct entry. As you do so, observe the position of the drive wheel.
- When correction of the straight-on position is complete, select the Beenden button (6) and if required, close the Servicemaster software.

Remark: Correction of the straight-on position also affects the 90° end position, since the entire "Steering angle curve" is moved.

Note: The Parameter auslesen button (7) is of no importance for service work.

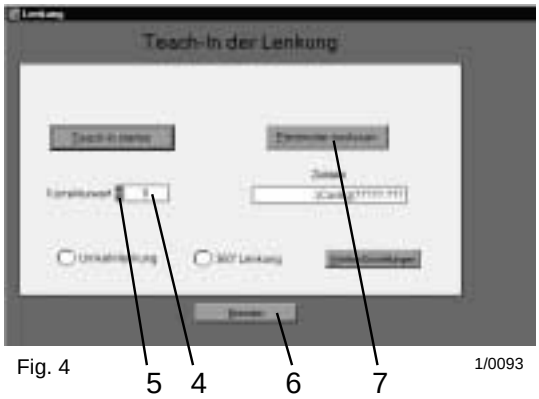

Fig. 4 1/0093

Copyright protected. No part of this manual may be reproduced in any form. Copyright reserved.

https://truckmanualshub.com/

Servicemaster

Commissioning the steering

A/D converter calibration

Remark: This function is only available from Servicemaster software version 1.11.

If the setpoint/actual value potentiometer, the DC/DC converter for the steering or the complete steering unit are replaced, the first work that must be carried out is the "A/D converter calibration".

- Start "Inbetriebnahme Lenkung" (1).
- Select the Weitere Einstallungen button (2).
- Start the A/D converter calibration with the Starten button (3).
- Disconnect the setpoint/actual value potentiometer as instructed (4) at the steering controller (connector G (X49) and connector L (X50), see sheet no. B6).

Note: In the version with a separate DC/DC converter (see sheet no. B3, point 2), connectors L and G should be disconnected at the converter and **not** at the steering controller.

- Confirm the operation with the OK button (5).

Remark: If the setpoint/actual value potentiometer is not disconnected, the steering is not active when the calibrating operation is complete, and once the vehicle has been switched off and then on again, the error message "FE 83" appears on the display.

Fig. 1 1/0084

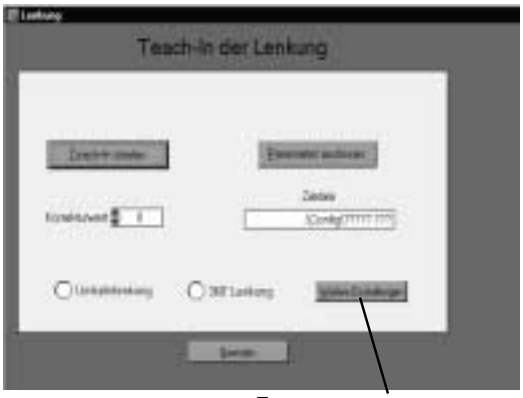

Fig. 2 1/0088

Fig. 3 1/0094

Fig. 4 1/0095

Copyright protected. No part of this manual may be reproduced in any form. Copyright reserved.

https://truckmanualshub.com/

Servicemaster

Commissioning the steering

A/D converter calibration

- Reconnect the connector from the setpoint/actual value potentiometer as instructed (1) and secure in place. Complete this operation with the OK button (2).
- The information window (3) shows the static currents of the setpoint potentiometer (Lenkrad-Querstrom) and actual value potentiometer (Drehschemel-Querstrom) (see sheet no. V31). These are usually 6-8 mA. If no cross current is displayed, the relevant potentiometers must be checked.
  If a cross current of > 10 mA is displayed, calibration of the A/D converter has not been successful; in this case, it should be repeated.

Remark: The display of the cross current varies according to the software version in the main computer in the steering system. This function is not supported with V2.08 and earlier - in this case, only "0 mA" appears and the error message "Kommunikationsfehler Lenkung" (4) appears. This does not have any effect on the steering performance!

- Close the information window with the OK button (5).
- Complete the calibration process with the Beenden button (6).
- Close the Servicemaster software if required.

Remark: Before the teaching-in process for the setpoint and actual value potentiometers can be carried out, the vehicle must be switched off and then on again! If this is not done, teaching-in is not carried out because the steering is not active.

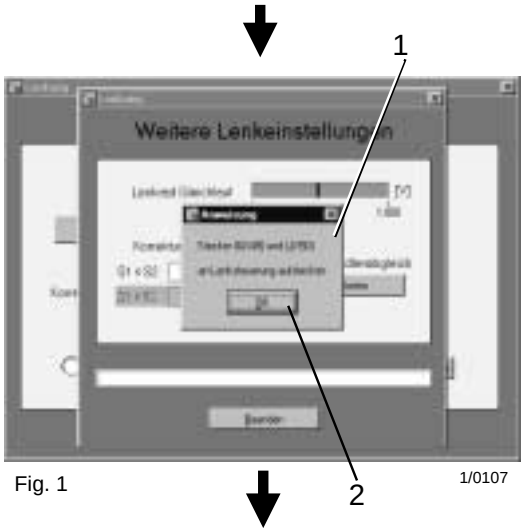

Fig. 1 1/0107

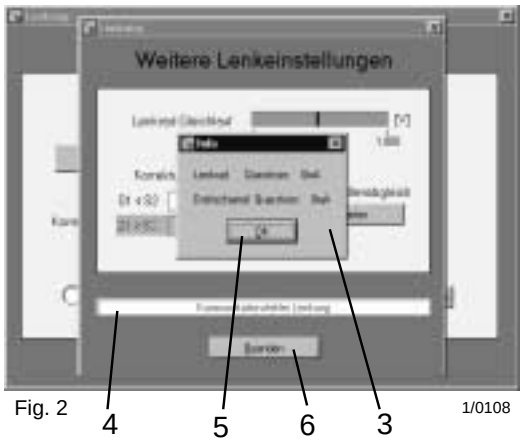

Fig. 2 1/0108

Copyright protected. No part of this manual may be reproduced in any form. Copyright reserved.

https://truckmanualshub.com/

Servicemaster

Commissioning the steering

Adjusting the flutter

The two signals from the setpoint potentiometer are monitored against each other. The difference between them (ΔR1-R2 = ΔU1-U2) is theoretically constant and should not exceed a range of +/- 0.3 V (see sheet no. B14).

Exception:
If the "control potentiometer" runs through its "Zero point" (7° range) this monitor is inactivated, because a range of +/- 0.3V is always exceeded here (see sheet no. B14).

If a flutter that is too large is detected, the steering switches off and "FE 87" is displayed.
It is possible that this flutter may have to be stopped, because of the potentiometer tolerances. If this does not help, the setpoint potentiometer must be replaced!

Procedure:

- In "Inbetriebnahme-Lenkung" (see sheet no. V8, Fig. 1), click on the Weitere Einstellungen button (1).
- Turn the steering wheel slowly from end stop to end stop, observing the "Lenkrad Gleichlauf" display (2) as you do so.
- The point at which the display changes to red is the point at which the permissible flutter is exceeded. If this occurs in an area in which the control potentiometer is within the dead range (7° range), this should be ignored. For help in identifying this: it is when a change is made from the "S1<S2" range (3) to the "S1>S2" range (4) and vice versa.
  The range that is not currently active has a grey background.
- If the display changes to red outside the dead range, the flutter is too high and must be adjusted. To do so, observe the value of the fluctuation (5) at which the display changes to red. This value may be positive or negative (you can see this from sign in front of the number).

Fig. 1 1/0088

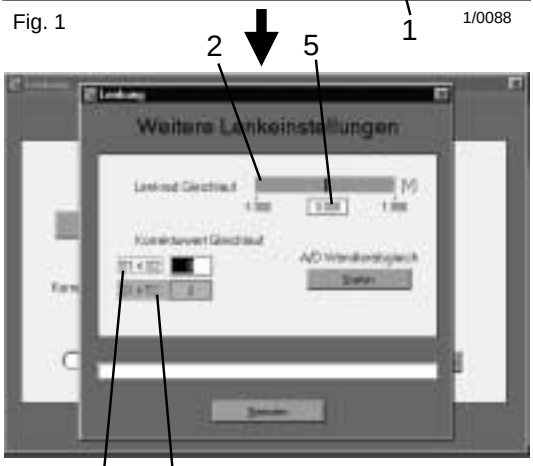

Fig. 2 1/0094

Copyright protected. No part of this manual may be reproduced in any form. Copyright reserved.

https://truckmanualshub.com/

Servicemaster

Commissioning the steering

Adjusting the flutter

- If the value is positive, the correction value (1) should be increased and if it is negative the value should be decreased (in steps of 5-10).

Remark: The values are generally between 120 and 130!
The values entered must be confirmed with "ENTER".

- The correction value must be modified within the range in which ("S1<S2" (2) or "S1>S2" (3)) the fluctuation that is too large has occurred.
- Click on the Beenden button (4) and switch the vehicle off and then on again. The new correction values are then active.
- Test the steering and make another correction if necessary.
- Close the Servicemaster software if required.

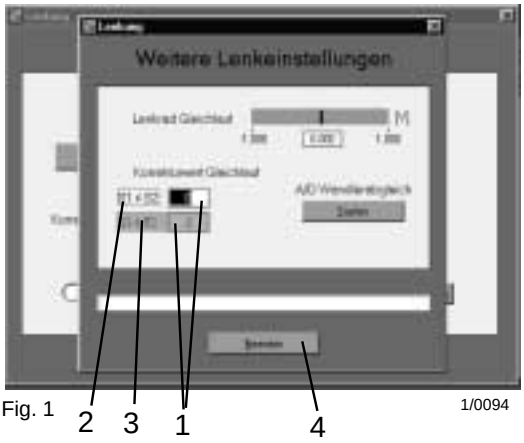

Fig. 1 1/0094

Copyright protected. No part of this manual may be reproduced in any form. Copyright reserved.

https://truckmanualshub.com/

Servicemaster

Commissioning the steering

Reverse steering

It is possible to set the steering to "Umkehrlen-kung". This means that the direction in which the drive wheel turns in relation to the steering wheel is changed.

- Start Inbetriebnahme Lenkung (1).

Remark: You must ensure that the drive wheel is in the straight-on position!
If it is not, a full teaching-in process may be needed after the vehicle has been switched over to reverse steering!

- Activate the Umkehrlenkung option (2).
- Quit the menu with the Beenden button (3).

Remark: A sign must then be attached to the vehicle to indicate that it is equipped with reverse steering!

Note: The "360° Lenkung" option must **not** be selected, otherwise the vehicle goes into error mode (FE 86 and steering / travel switched off).
Then the "360°-Option" has to be deactivated and the vehicle must be switched off and then on again twice, to reset the system.

1

Fig. 1 1/0084

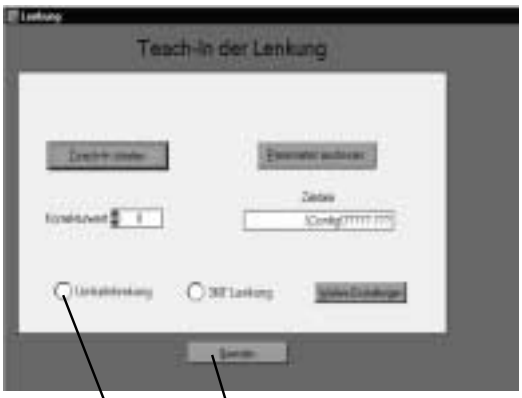

Fig. 2 1/0088

2 3

Copyright protected. No part of this manual may be reproduced in any form. Copyright reserved.

https://truckmanualshub.com/

Servicemaster

Commissioning the hydraulics

When a new LAS-module (1) is put into operation, or if a module has been replaced, its parameters must be reset. This involves:

- Reading in the potentiometer for joystick / 4-lever system
- Adjusting the speeds for the individual hydraulic axes
- Configuration of the options
- Setting the general vehicle data

Remark: The error code "FE 55" appears on the display until commissioning has been carried out.

The vehicle can be operated even if the LAS-module is not commissioned, because there is a basic parameter set stored in the module. However, only rough functional processes are possible, so this adjustment process is essential!

Remark: As well as the settings in the LAS-module, the following basic settings must be made in the hydraulic system in order for the hydraulics to function smoothly:

- Rinsing out the pump and tank (see sheet. N10)
- Adjusting the pressure relief valve (see N10)

This can be carried out beforehand if necessary.

Commissioning procedure, general

- Select "Inbetriebnahme Hydraulik" (2).
- In the type selection window (Fig. 3) there are 3 options for further procedure:
  - Commissioning with the standard parameter set (3) if no vehicle-specific data has previously been created (initial commissioning).
  - Commissioning with a vehicle-specific file using the Datei laden (4) button. For this purpose, the LAS data must first be stored in a vehicle file (see sheet no. V19 + 20).
  - Commissioning by reading out the data from the LAS-module with the Daten Upload button (5, see sheet no. V24). This function is needed for reading in the joystick / 4-lever system if this has been replaced and the LAS-module is already functional.
- The Beenden button (6) can be used to abort the process.

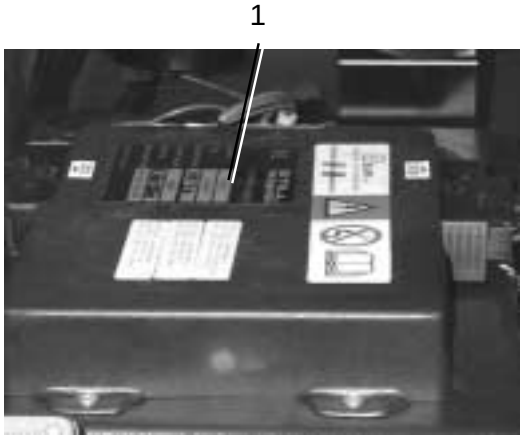

Fig. 1 1/0109

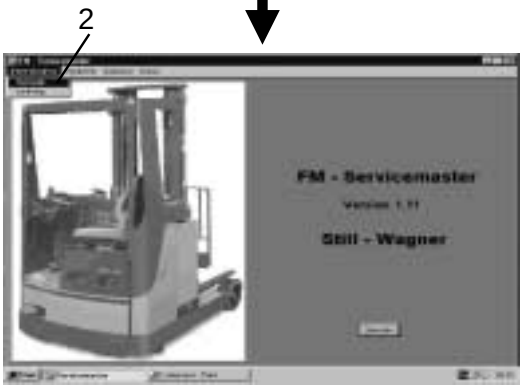

Fig. 2 1/0084

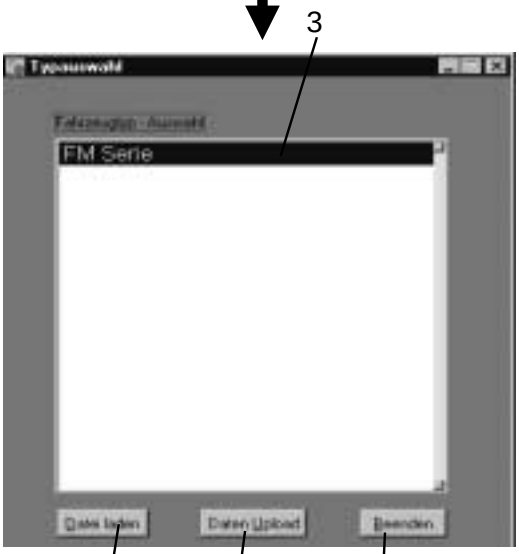

Fig. 3 1/0110

Copyright protected. No part of this manual may be reproduced in any form. Copyright reserved.

https://truckmanualshub.com/

Servicemaster

Commissioning the hydraulics

Commissioning with standard parameter set (Initial commissioning)

Remark: Initial commissioning is only necessary if the vehicle-specific data for the LAS-module has not previously been stored in a file.

- Select "Inbetriebnahme Hydraulik" (see sheet V13).
- Under "Fahrzeug-Typauswahl", select the "FM -Serie" parameter set (1) (double click with the mouse or with [→] and [↵]).
- Check the "Nullfenster-Werte" (2) to ensure that the value is 1.0V for all 4 axes. The values can be altered with the selection fields (3) or by overwriting them directly.

Remark: The "Nullfenster" defines the neutral position of the potentiometer in which movement of the controls is not yet detected (e.g. $U_{Neutral}$ = 5V; movement starts from +/- 0.5V = 1.0V zero window). This can be set in a range of 0.8V - 3.0V, but the value must be at least 1.0V.

- Click on the [Nullfenster übernehmen] button(4).
- Push the joystick or 1st lever for selecting the lower main lift function (5) right through as far as it goes.
- In the relevant value window (6), the setpoint value for lowering the main lift should reduce and the bar display (7) should move downwards.
- At the maximum deflection point, the end value is shown in the window (8).
- Hold the potentiometer in this position and confirm the voltage value with the [OK] button (9).
- Push the joystick or 1st lever for selecting the lift main lift function (10) right through as far as it goes.
- In the relevant value window (6), the setpoint value for lifting the main lift should increase and the bar display (7) should move upwards.
- At the maximum deflection point, the end value is shown in the window (11).
- Hold the potentiometer in this position and confirm the voltage value with the [OK] button(12).

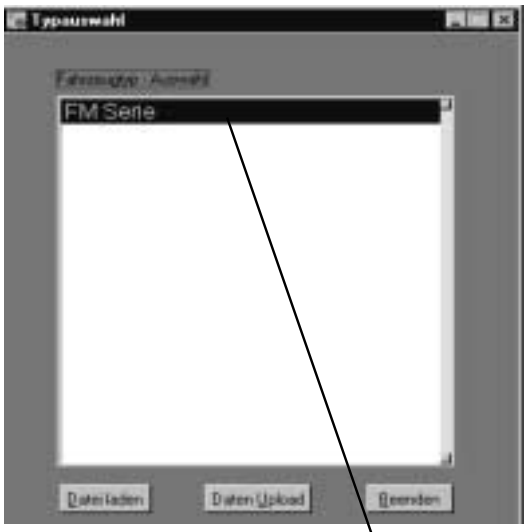

Fig. 1 1/0110

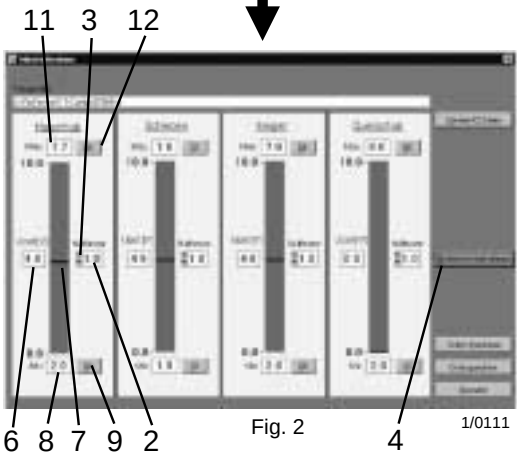

Fig. 2 1/0111

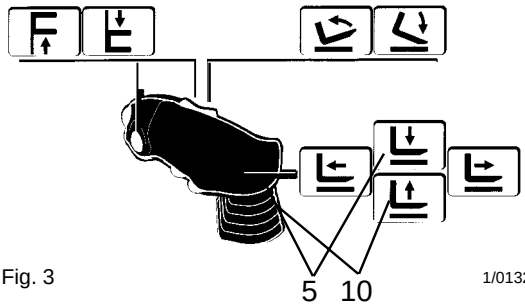

Fig. 3 1/0132

Fig. 4 1/0134

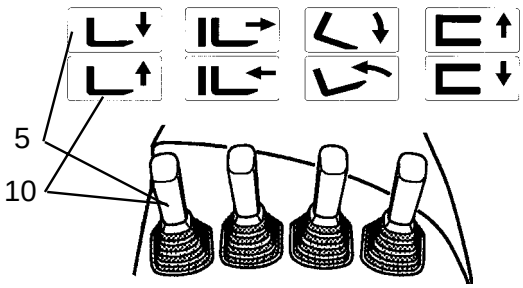

Fig. 5 1/0133

Copyright protected. No part of this manual may be reproduced in any form. Copyright reserved.

https://truckmanualshub.com/

Servicemaster

Commissioning the hydraulics

Commissioning with standard parameter set (Initial commissioning)

• It is logical to set the potentiometers for

- Reach (1)
- Tilting (2) and
- Transverse shifting (3)

in this order.

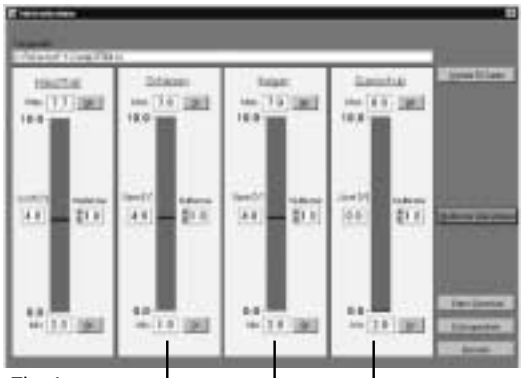

Fig. 1 1/0111

1 2 3

Remark: With the "joystick" version, no teaching-in is required for transverse shifting, since there is no separate potentiometer for transverse shifting.

Definition of movement directions/signal sequence:

Joystick:
Pull main lift -> setpoint increases
Pull Reach -> setpoint increases
(DWS direction)
Tilting -> setpoint increases
(rocker side to driver's seat)

4-lever system:
Pull lever -> setpoint increases
(generally!)

Signal levels:
Neutral position -> approx. 5.0V
min. value -> approx. 2.0V
max. value -> approx. 8.0V

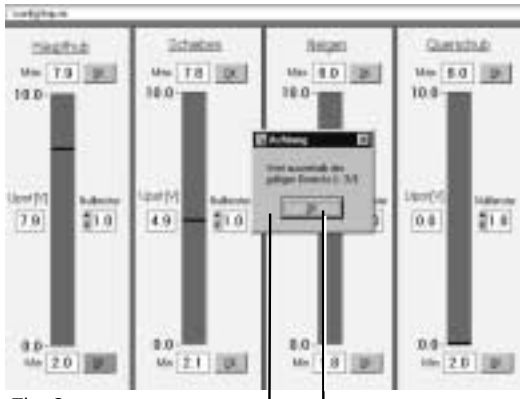

Fig. 2 1/0112

4 6

Remark: The signal levels may vary slightly due to potentiometer tolerances.

If an incorrect potentiometer movement direction or no movement direction is carried out during teaching in, an error message appears in the adjusting window.

- "Wert ausserhalb des gültigen Bereichs (>3V)" (4). When the min. value is read in.
- "Wert ausserhalb des gültigen Bereichs (<7V)" (5). When the max. value is read in.

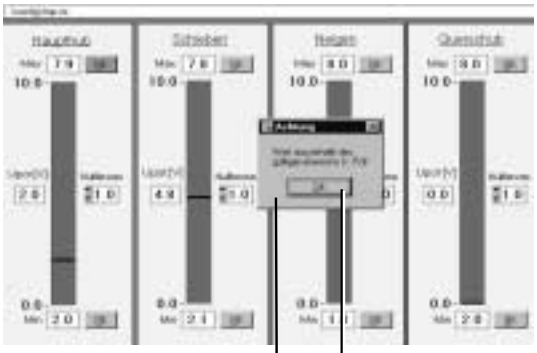

Fig. 3 1/0113

5 6

This information window must be confirmed with OK (6) and the teaching-in operation in question must be repeated!

Remark: This signal monitoring feature is only fitted from Servicemaster version V1.11.

Copyright protected. No part of this manual may be reproduced in any form. Copyright reserved.

https://truckmanualshub.com/

Servicemaster

Commissioning the hydraulics

Commissioning with standard parameter set (Initial commissioning)

- After all the potentiometers have been read in, select the Weitere FZ Daten button (1).
- The following is set in the "Allgemeine FZ Daten" (General vehicle data) input mask (2):

  - **Fahrzeugtyp (Vehicle type)** (3):
    Depending on the vehicle (FM 12/14/17/20), the value is 12,14,17 or 20

  - **FZ-Kennung (Vehicle ID)** (4):
    This 5-figure number is the specific vehicle number, which is stamped into the side shift carriage below the right-hand mast bearing.

  - **Batterietyp (Battery type)** (5):
    Depending on the type of battery used, the relevant model number must be entered here.

0 = Wet battery, improved performance	to 360 Ah
1 = Wet battery, improved performance	to 480 Ah
2 = Wet battery, improved performance	to 600 Ah
3 = Wet battery, improved performance	to 750 Ah
4 = Dry battery	to 360 Ah
5 = Dry battery	to 480 Ah
6 = Dry battery	to 600 Ah
7 = Dry battery	to 720 Ah

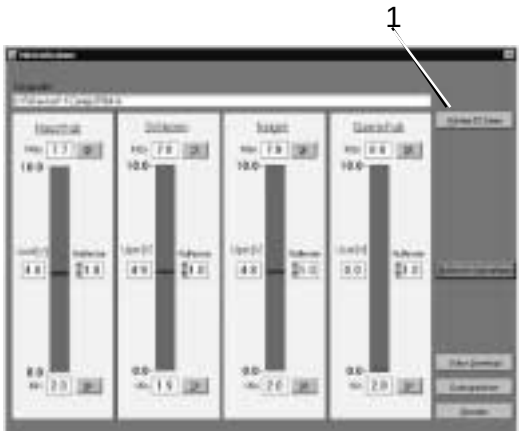

Fig. 1 1/0111

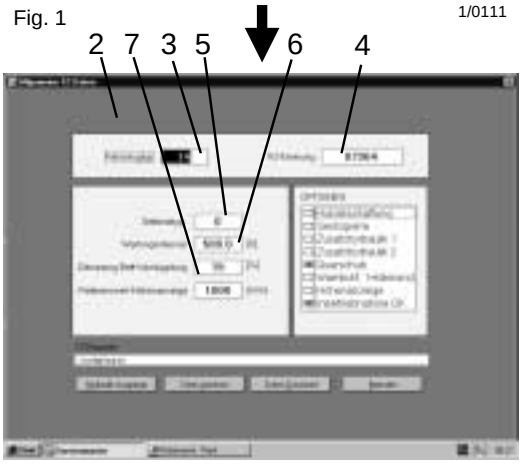

Fig. 2 1/0114

Remark: Alternatively, the battery type can be set in the "Onboard diagnosis" on the display. Type 0 is pre-set in the factory.

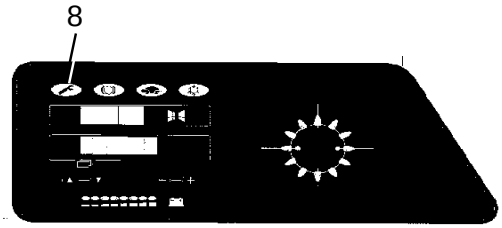

  - **Wartungsintervall (Maintenance interval)** (6):
    Input to determine at what operating hour on the display the maintenance symbol (8) should light up constantly.

  - **Dämpfung Batt.-Verriegelung (Battery lock damping)** (7):
    If the battery is unlocked, the side shifting speed is reduced. The value set here determines by how many % the speed is reduced, based on the max. speed.
    15% is pre-set in the factory (0% = no reduction).

Copyright protected. No part of this manual may be reproduced in any form. Copyright reserved.

https://truckmanualshub.com/

Servicemaster

Commissioning the hydraulics

Commissioning with standard parameter set (Initial commissioning)

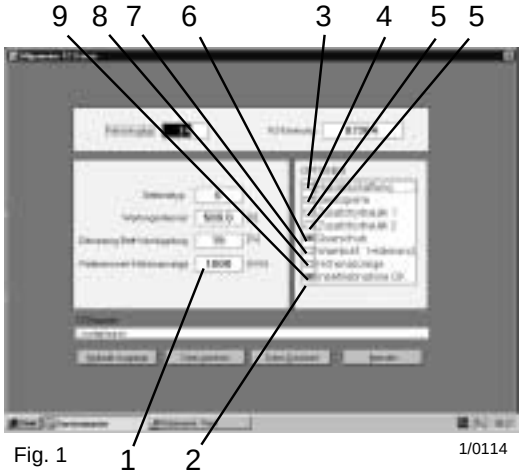

Fig. 1 1/0114

- **Referenzwert-Höhenanzeige (Reference height display)** (1):
  For the optional height display, the value must be entered here which determines when the fork holder leaves the free lift and transfers to the main lift (reference switch for main lift is actuated). The height display is started in counting mode when the value entered here is reached (see sheet no. MXX).
  A value of1000 mm is pre-set in the factory.

- **Optionen (Options)**:
  The options are only described here briefly.
  For further details, see Chapter M.
  Each option is activated by clicking on the individual selection arrows.

  Hubabschalttung (Lift stop) (3):
  Activation of the intermediate lift/end lift stop (see sheet no. MXX)

  Senksperre (Lowering lock) (4):
  Configuration of the side shift / lowering lock (see sheet no. MXX)

  Zusatzhydraulik 1 oder 2 (Additional hydraulics 1 or 2) (5): Activation of the additional hydraulic axes (see sheet no. MXX)

  Querschub (Transverse shift) (6):
  Selection of the mast transverse shift option (active in this example)

  Warnlicht (Warning light) (7):
  Configuration of a warning light or all-round light (see sheet no. MXX)

  Höhenanzeige (Height display) (8):
  Selection of the height display. This also causes the "Height display reference value" to be activated.

  Inbetriebnahme OK (Commissioning OK) (9):
  This selection field is set automatically when initial commissioning of the LAS-module is complete. At the same time, the UWA-CPU is activated (see sheet no. MXX)

Remark: From Servicemaster version V1.13 there are two additional options:
- Travel LS
- Travel DWS

These are used for configuration/control of a signal generator in accordance with the direction of travel (see sheet no. MXX). For this purpose, version 1.35 of the LAS module itself must be fitted!

Copyright protected. No part of this manual may be reproduced in any form. Copyright reserved.

https://truckmanualshub.com/

Servicemaster

Commissioning the hydraulics

Commissioning with standard parameter set (Initial commissioning)

- Once the "Allgemeine FZ Daten" (General vehicle data) has been set, select the Daten Download button (1), to send the data that has been set so far to the LAS module.
- This "Data download" can be checked with the "Progress display" (2).
- When the data has been transferred successfully, select the Hydraulik Ausgänge button (3).
- In the "Hydraulik Ausgänge" (Hydraulic outputs) mask (4), the speeds of the individual axes can be set. The voltage/current values can be changed using the selection fields (5) or by entering the values directly in the relevant "Value field" (6).

Remark: For the correct procedure for determining the individual axis values, please see sheet no. V20 and the recommended values for initial commissioning.

- After one or more values have been changed, actuate the Beenden button (7) and send the value or values to the LAS-module with Daten Download (8).
- When the data transfer is complete and also in the following masks, select Beenden (9) until you are back in the "Typauswahl" (Type selection) mask.

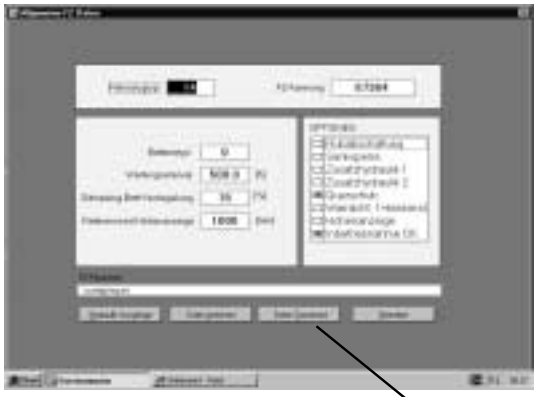

Fig. 1 1/0114

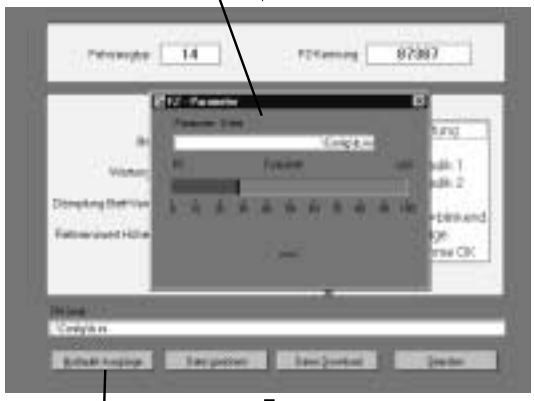

Fig. 2 1/0115

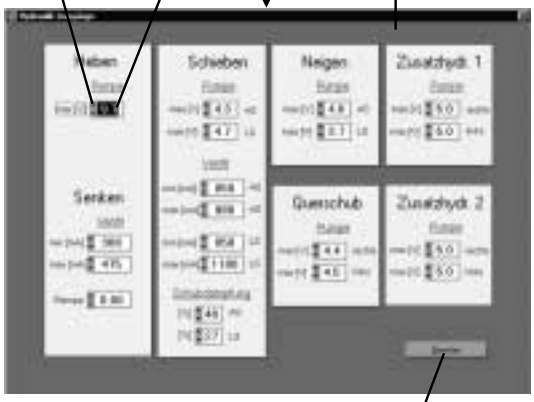

Fig. 3 1/0116

Fig. 4 1/0114

Copyright protected. No part of this manual may be reproduced in any form. Copyright reserved.

https://truckmanualshub.com/

Servicemaster

Commissioning the hydraulics

Commissioning with standard parameter set (Initial commissioning)

- When the "Typauswahl" mask (1) appears, the new speed of the axis in question can be tested.
- To change data again, select Daten Upload (2). Reading in of the data from the LAS module can be observed on the monitor screen.
- Use Weitere FZ Daten (3) and Hydraulik Ausgänge (4) to return to the mask where the parameters for the relevant axes can be changed.

  Repeat this process (Parameter - Data download - Test - Data upload - Change parameters) until the axis in question is optimally adjusted (see sheet no. V20 "Recommended values for initial commissioning").

- Finally, the data is stored in a file: Select Datei speichern (5).

Fig. 1 1/0110

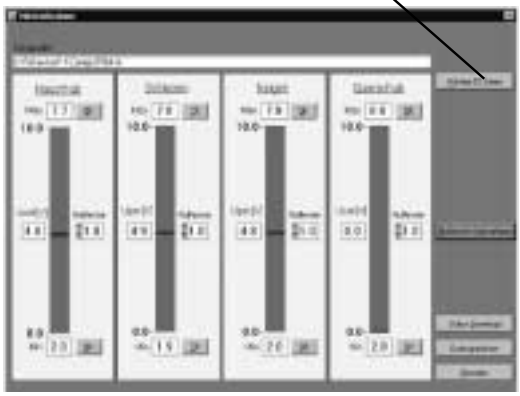

Fig. 2 1/0111

Fig. 3 1/0114

Copyright protected. No part of this manual may be reproduced in any form. Copyright reserved.

https://truckmanualshub.com/

Servicemaster

Commissioning the hydraulics

Commissioning with standard parameter set (Initial commissioning)

- Enter a name for the file you want to save in the "Dateiname" field (1), e.g. the vehicle ID. (see sheet no. V16, "FZ-Kennung"). The specified directory (2) for storing files is "c:\FmService\Config", but this can be changed if required.
- Save the complete data for the LAS-module on the computer with the Speichern button (3). The Abbrechen button (4) can be used to abort the process without saving the data.
- The Beenden button (5) can be used here and in the following masks to close the Servicemaster software.

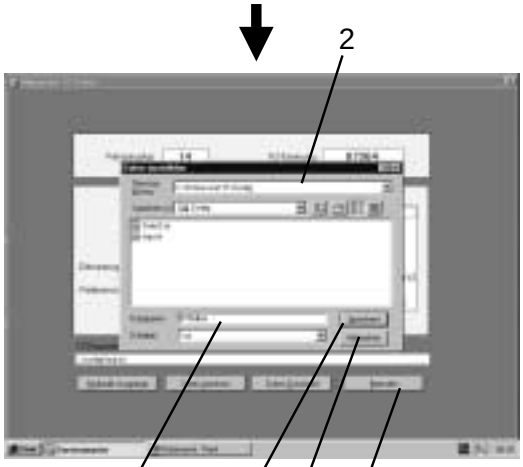

Fig. 1 1/0117

Recommended values for initial commissioning

The values listed below are for optimum adjustment of the individual hydraulic axes. The speed specifications refer to a **"Test with rated load"!**

- **Setpoints for pump speeds**

Lifting	(6)	10.0V	max. speed (100% pump speed)
Reach DWS	(7)	4.6V	approx. 10.5 cm/s
Reach LS	(8)	4.9V	approx. 10.5 cm/s
Tilting DWS	(9)	4.0V	approx. 3.0 sec.
Tilting LS	(10)	3.7V	approx. 3.0 sec
Transv. shift r.	(11)	4.5V	approx. 4.4 cm/s
Transv. shift l.	(12)	4.4V	approx. 4.4 cm/s
Add. hydr.1 r.	(13)	5.0V	depends on attachment
Add. hydr.1 l.	(14)	5.0V	depends on attachment
Add. hydr.2 r.	(15)	5.0V	depends on attachment
Add. hydr.2 l.	(16)	5.0V	depends on attachment

DWS = Drive wheel side LS = Load side r. = right l. = left

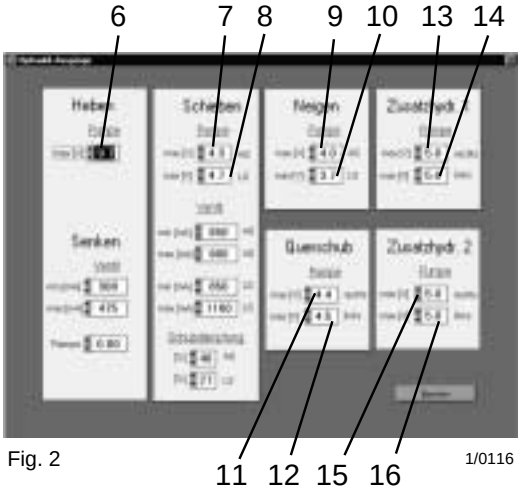

Fig. 2 1/0116

Remark: On vehicles with pre-pressure valves for reach (see sheet no. N19), the parameters for "Reach DWS" and "Reach LS" must be increased by approx. 1.0V.

Copyright protected. No part of this manual may be reproduced in any form. Copyright reserved.

https://truckmanualshub.com/

Servicemaster

Commissioning the hydraulics

Commissioning with standard parameter set (Initial commissioning)

Recommended values for initial commissioning

- **Current values for proportional valve for lowering**
  On initial commissioning, the lowering brake valve at the valve block in the chassis must first be set (see sheet no. N11), so that the max. permissible lowering speed of 60 cm/sec. cannot be exceeded (UVV Directive).
  -> Set max. lowering (1) to 700 mA (valve 100% open) and limit the max. speed for lowering main lift with the lowering brake valve.

- Now set the values for the normal lowering function.

Lower. min. (2)	ca. 300 mA	Starting speed for lowering ca. 0 cm/s
Lower. max. (1)	ca. 510 mA	ca. 52cm/s free lift ca. 55 cm/s main lift
Ramp (3)	0.0 sec	as required

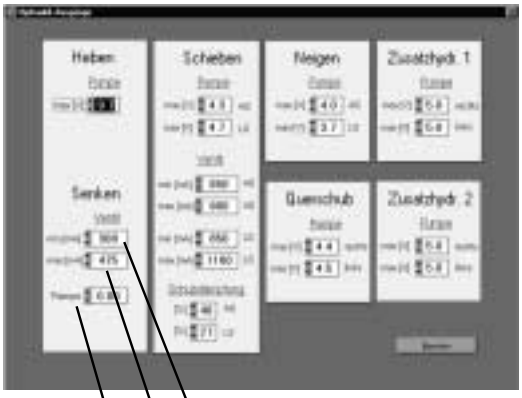

Fig. 1 1/0116

Remark: The parameter Rampe (3) is available from Servicemaster software version 1.11. The LAS-module itself must be fitted with software version 1.23 or higher.
The increase time of Imin. - Imax is defined with the value. This parameter is used in the chassis from valve block version 3 (see sheet no. N7).

Copyright protected. No part of this manual may be reproduced in any form. Copyright reserved.

https://truckmanualshub.com/

Servicemaster

Commissioning the hydraulics

Commissioning with standard parameter set (Initial commissioning)

Recommended values for initial commissioning

- **Current values for proportional valve for reach:**
  The proportional valve for reach does not actually have a function in the single reach function, since when it is set optimally, it is always open by more than the amount of oil pumped by the pump (so no oil volume regulation takes place). However, in the simultaneous lifting and reach function, it ensures that the operation takes place synchronously.

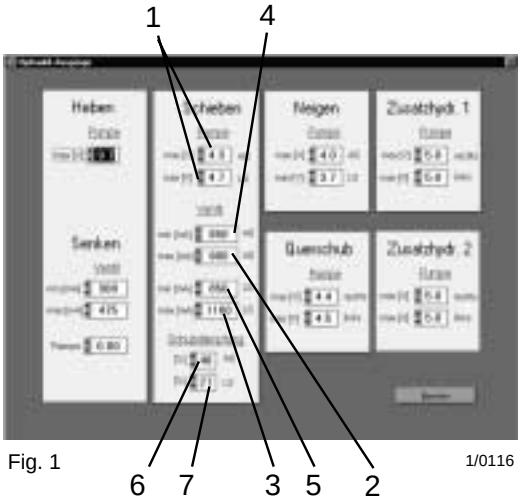

Fig. 1 1/0116

Adjusting process

- Set reach DWS and LS (1) to 8.0V.
- Set the valve values max. DWS (2) and max. LS (3) to give a speed of approx. 11.5 cm/sec. (approx. 1100 mA / 1200 mA).
- Reduce reach DWS and LS (1) again until a speed of approx. 10.5 cm/sec. is set (approx. 4.6V / 4.9V).

Valve min. DWS (4)	ca. 700 mA	Starting speed for reach; ca. 0 cm/s
Valve max. DWS (2)	ca. 1000 mA	ca. 10.5 cm/s
Valve min. LS (5)	ca. 700 mA	Starting speed for reach ca. 0 cm/s
Valve max. LS (3)	ca. 1200 mA	ca. 10.5 cm/s

DWS = Drive wheel side LS = Load side

Remark: On vehicles with pre-pressure valves for reach (see sheet no. N19), the parameters for "Valve max. DWS" (2) and "Valve max. LS" (3) must be increased slightly, so that noise from the pre-pressure valves is prevented or at least minimised.

- **Set the reach damping values:**
  These values are used to define the reduced speed in the reach end range (pump speed is reduced).

Reach damping DWS (6)	50%	as required
Reach damping LS (7)	30%	as required

Copyright protected. No part of this manual may be reproduced in any form. Copyright reserved.

https://truckmanualshub.com/

Servicemaster

Commissioning the hydraulic system

Commissioning with a vehicle-specific file

If an LAS-module has already been parameterised in the past and the data has been stored as a file (see sheet no. V19 + V20), commissioning can be carried out with this data if the module is replaced at a later stage.

- Select "Inbetriebnahme - Hydraulik" (see sheet V13).
- Click on the Datei laden button (1).
- In the file window that now opens (2), open the file you need (e.g. 87367.ini) with 1 click of the mouse.
- The selected file appears under "Dateiname" (3) and is loaded with the Select button (4).
- The process can be aborted without loading a file by selecting Abbrechen (5).
- Once the vehicle specific file has been selected and loaded, the program goes into its normal commissioning routine (6), i.e.:
  - Setting the zero window and adjusting the potentiometer values (teaching-in, see sheet no. V14,15).
  - Configuring the general vehicle data (see sheet no. V16).
  - Modifying the parameters for the speed of the hydraulic axes, if necessary (see sheet no. V18).
  - Storing new data again (see sheet nos. V19 + V20).

Fig. 1 1/0110

Fig. 2 1/0118

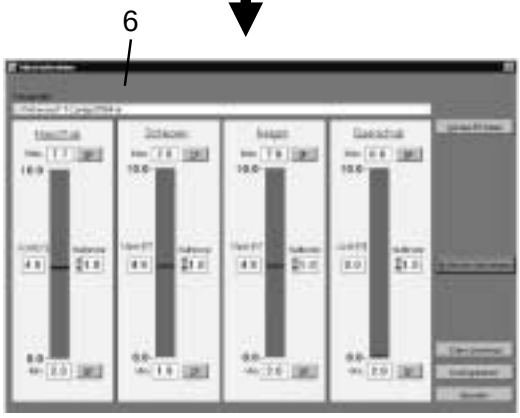

Fig. 3 1/0111

Copyright protected. No part of this manual may be reproduced in any form. Copyright reserved.

https://truckmanualshub.com/

Servicemaster

Commissioning the hydraulic system

Commissioning with LAS-module data (Daten Upload)

This method is for reading in the joystick / 4-lever system (teaching-in process) when the joystick or a lever (potentiometer) has been replaced and a general commissioning sequence has already been carried out. Also, the parameters for the hydraulic axes and the general vehicle data can be modified at the same time.

- Select "Inbetriebnahme - Hydraulik" (see sheet no. V13).
- Click on the Daten Upload (1) button.
- The process of reading out the data (upload) from the LAS-module can be checked on the "Progress display" (2).
- The data read out in this way is stored temporarily on the computer in a temporary file -> tmp.ini (3).
- When the loading process is complete, the system enters the normal commissioning routine (4) and teaching-in of the joystick / 4-lever system can be carried out (see sheet nos. V14, 15).
- Transmit the teaching-in data to the LAS-module with Daten Download (5).
- Weitere FZ-Daten (6) can be used to:
  - Reconfigure the general vehicle data (see sheet no. V16).
  - Modify the parameters for the speed of the hydraulic axes, if necessary (see sheet no. V18).
- The altered / read-out data from the LAS-module can be stored in a file with Datei speichern (7) (see sheet nos. V19 + V20).
- The Beenden button (8) interrupts the process, and you return to the starting mask of the software.

Fig. 1 1/0110

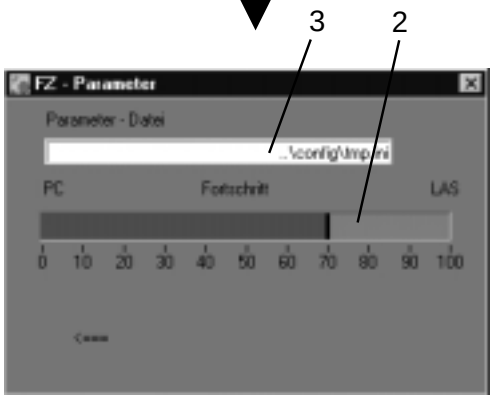

Fig. 2 1/0119

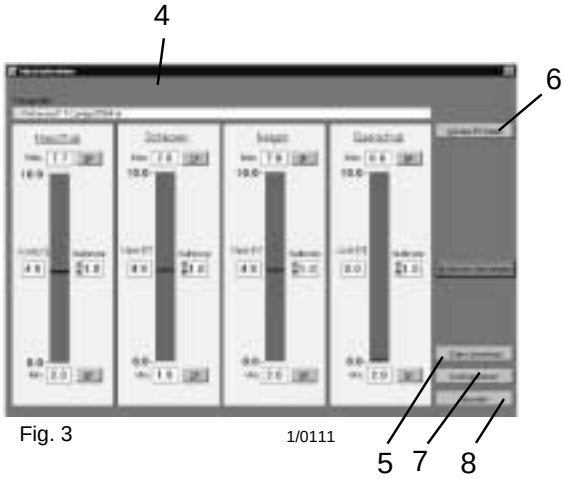

Fig. 3 1/0111

Copyright protected. No part of this manual may be reproduced in any form. Copyright reserved.

https://truckmanualshub.com/

Servicemaster

Loading parameters

Data upload

The Parameter - Daten Upload function (1) can be used to read the data out of the LAS-module and modify it (general vehicle data (2) see sheet no. V16, Hydraulic axis parameters (3) see sheet no. V18).
The potentiometers cannot be "taught-in" here. This is only possible in "Inbetriebnahme Hydraulik" (see sheet no. V13)

The files changed in this way can then:

- Be transferred back into the LAS-module with Daten Download (4) (see sheet no. V18).
- Be stored as a file on the computer with Save file Datei speichern (5) (see sheet no. V19, 20)

The Parameter - Datei laden function (6) can be used to open a file that has previously been stored on the computer (7, see sheet no. V23).
The "General vehicle data" (2) and the "Hydraulic axle parameters" (3) can also be changed here at this point.

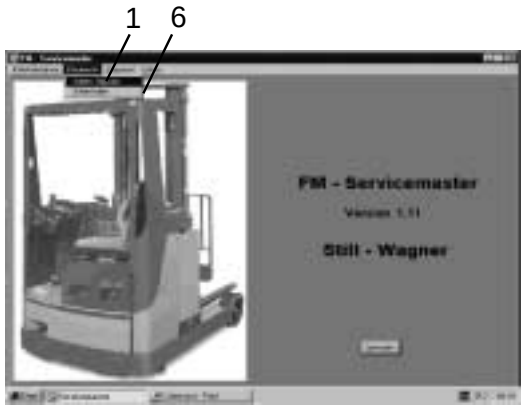

Fig. 1 1/0085

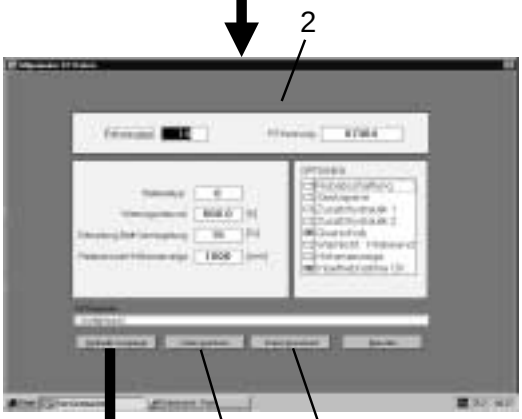

Fig. 2 1/0114

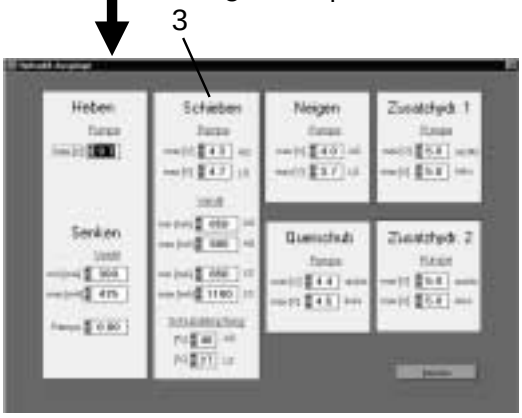

Fig. 3 1/0116

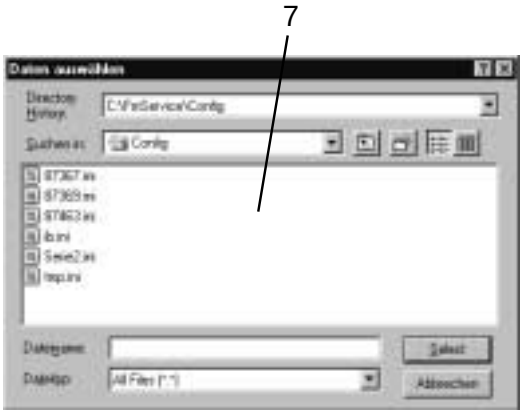

Fig. 4 1/0120

Copyright protected. No part of this manual may be reproduced in any form. Copyright reserved.

https://truckmanualshub.com/

Servicemaster

Diagnosis

Standard

Diagnose Standard (1) takes you into the "diagnosis selection window" (2).

Here you can choose between:

- Reading out and deleting the LAS-module error memory (3, see sheet no. V27).
- Displaying the setpoint signals for the hydraulics (4) (potentiometer signals).
- Testing the setpoint/actual value potentiometers for the steering (5, see sheet no. V31).

Remark: This test is only available from Servicemaster software V1.11.

- Testing all the switching signals that are connected to the LAS-module (6, see sheet no. V32).
- Updating the basic software in the LAS-module (7) (software, main computer, see sheet no. V33).

Diagnosis mode can be quit with the Beenden button (8).

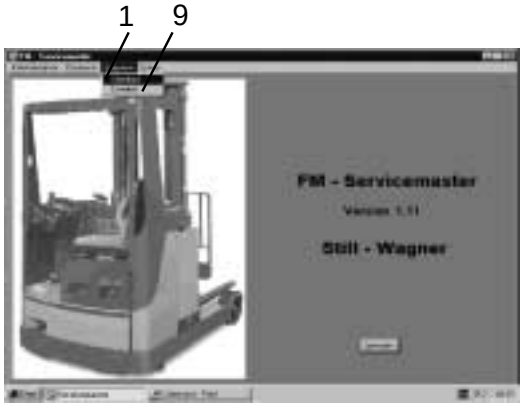

Fig. 1 1/0086

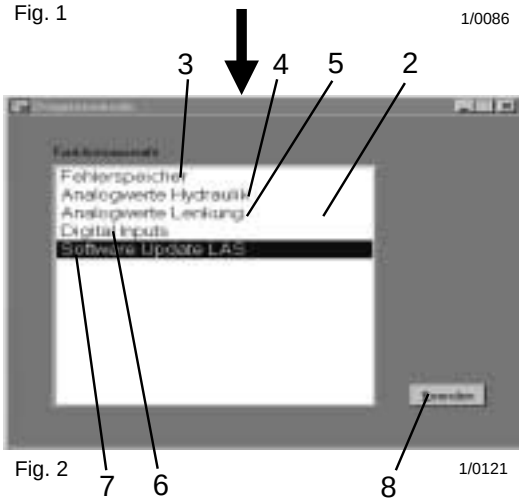

Fig. 2 1/0121

Extended

The Diagnosis Erweitert menu point (9) is not relevant for servicing work and is protected with a password.

Copyright protected. No part of this manual may be reproduced in any form. Copyright reserved.

https://truckmanualshub.com/

Servicemaster

Diagnosis

Error memory

When Fehlerspeicher (1) is selected, the error memory of the LAS-module is read out and displayed (2).

The following information is displayed:

- The number of errors stored (3).
- The error number (4) with the operating hour (5) when the error occurred for the first time.

Remark: Each error is only entered once.

- Delete the error memory with Löschen (6).
- The error memory can be read out again with Lesen (7).
- Return to the Main menu for Diagnosis with Beenden (8).

If errors have occurred, they are allocated to an error class. They are entered in the error memory according to this
classification. Errors that occur are given an error number (see sheet no. V28) and are shown on the display.

Error class 1 (top priority)
An error is displayed and remains on the display until it has been rectified, e.g. if the operator wants to move the vehicle but travel is only possible in creep speed, since the battery lock is not active.
The maintenance symbol flashes for the duration of the error. The error is not stored.

Error class 2
Errors are displayed for as long as they are present. They are not displayed if an error of a higher class has occurred. If there are several errors in this class, they are shown one after the other at intervals of 2-seconds. The first time the error occurs, the error number and the reading on the hour counter are stored. The maintenance symbol flashes during the error.

Error class 3
Errors in this class are shown every 2 seconds, alternating with the operating hours (e.g. carbon brushes). They are only displayed if no errors of a higher class have occurred. If there are several errors in this class, the next error is added to the alternating display sequence. The first time the error occurs, the error number and the reading on the hour counter are stored.
The maintenance symbol lights up for the duration of the error.

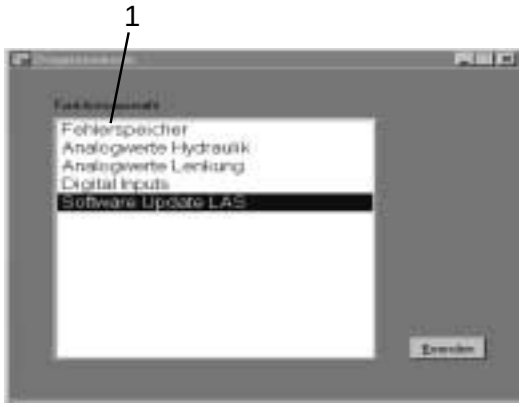

Fig. 1 1/0121

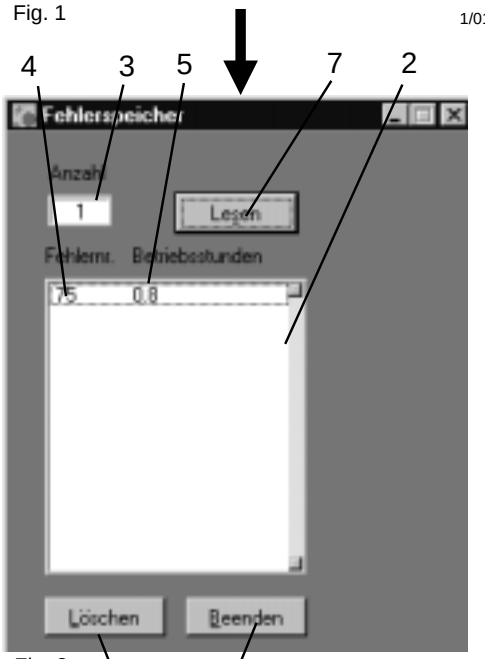

Fig. 2 1/0122

Copyright protected. No part of this manual may be reproduced in any form. Copyright reserved.

https://truckmanualshub.com/

Servicemaster

Diagnosis

List of errors

Error	Cause: LAS	Cause: FPS	Cause: Steering	ERR. No.	Class / remark
Battery open, foot pedal and accelerator pedal pressed		X		01	1
Communication error LAS - FPS, LAS not receiving telegrams from FPS	X (S-CPU)			03	2
Incorrect sequence Accelerator pedal pressed before foot switch		X		06	1
Pedal voltage not OK		X		07	1
Pedal voltage range outside 4V - 9.6V		X		08	1
EEPROM faulty, data content is incorrect, calculated check-sum does not match the stored checksum		X		10	1
Driver short-circuit a) Driver for main contactor control has short-circuited b) Driver for main contactor control is not OK c) Microcontroller ST 6215 is faulty		X		11	1
No field current		X		12	1
High field current		X		13	1
Pump I = 0 ever or Pump STBY I too high		X		14	1
Load capacitors; incorrect voltage value on switching-on		X		15	1
VMN (Volt Motor Negative) not in order		X		16	1
V-field not OK		X		17	1
STBY I high or I = 0 always		X		18	1
Main contactor closed or coil short-circuit		X		19	1
Drive motor temperature		X		20	1
Drive motor carbon brush		X		21	3
Excess temperature in power unit for travel		X		22	1
Pump motor temperature		X		30	1
Pump motor carbon brush		X		31	3
Excess temperature in power unit for hydraulics		X		32	1
SOK (Control OK Signal) faulty; from FPS -> LAS a) when FPS detects short-circuit at SOK output b) when LAS does not see 0V at SOK input after 3 secs.	X	X		42	1
Battery faulty U < 30 volts		X		43	1

Remark: For a detailed description of the FPS errors, see sheet no. M24.
The FPS errors are also stored in the error memory of the FPS itself (see sheet no. V55).
For a detailed description of the LAS errors, see sheet no. MXX

Copyright protected. No part of this manual may be reproduced in any form. Copyright reserved.

https://truckmanualshub.com/

List of errors, continued

Error	Cause: LAS	Cause: FPS	Cause: Steering	ERR. No.	Class / remark
Lifting pot., wire breakage (arm 1+arm 2) > 11V or < 8.5V	X(S-CPU)			50	2
Side shift pot., wire breakage (arm 1+arm 2) > 11V or < 8.5V	X(S-CPU)			51	2
Tilting pot., wire breakage (arm 1+arm 2) > 11V or < 8.5V	X(S-CPU)			52	2
Transv. pot., wire breakage (arm 1+arm 2) > 11V or < 8.5V	X(S-CPU)			53	2
Potentiometers for lifting, side shifting, tilting, transverse outside the zero window on switching on	X(S-CPU)			54	1 from LAS 1.23
Commissioning not yet carried out, commissioning bit not yet set, ÜWA-CPU not yet activated	X(S-CPU)			55	1
Communication error on LAS between S-CPU and ÜWA-CPU	X(S-CPU)			56	2
Communication error on CAN bus between LAS and display a) LAS has not received PDOs from display for more than 1 sec. b) Display has not received PDOs from LAS for more than 1 sec. c) Display has not received PDOs on version request LAS/steering	X(S-CPU)			58	2
Hydraulic output for lifting/lowering detected wire breakage/short-circuit	X(S-CPU)			60	1
Hydraulic output for side shifting detected wire breakage/short-circuit	X(S-CPU)			61	1
Hydraulic output for tilting detected wire breakage/short-circuit	X(S-CPU)			62	1
Hydraulic output for transverse/add. 1 detected wire breakage/short-circuit	X(S-CPU)			63	1
Hydraulic output for add. 2 detected wire breakage/short-circuit	X(S-CPU)			64	1
Electr. brake output detected wire breakage/short-circuit	X(S-CPU)			65	1
Hydraulic output for lifting/lowering active, pot. for lifting not selected	X(Ü-CPU)			70	2
Hydraulic output for side shifting active, side shifting pot. not selected	X(Ü-CPU)			71	2
Hydraulic output for tilting active, tilting pot. not selected	X(Ü-CPU)			72	2
Hydraulic output for transv./add1 active, transv. pot. not selected	X(Ü-CPU)			73	2
Hydraulic output for add. 2 active, transv. pot. not selected	X(Ü-CPU)			74	2
Brake output active, handbrake switch not selected	X(Ü-CPU)			75	2
Safety relay K1 (3+48V) contact short-circuit (in LAS-module)	X(Ü-CPU)			78	2
Safety relay K2 (3+24V) contact short-circuit (in LAS-module)	X(Ü-CPU)			79	2
Electr. steering supply voltage faulty			X	80	2
Electr. steering power unit excess current			X	81	2
Electr. steering power unit excess temperature			X	82	2
Electr. steering setpoint generator wire breakage or short-circuit			X	83	2
Electr. steering actual value generator wire breakage or short-circuit			X	84	2
Electr. steering motor model error			X	85	2
Electr. steering motor position controller error			X	86	2
Electr. steering internal error			X	87	2
Electr. steering CAN Bus error			X	88	2
Electr. steering EEPROM error, incorrect checksum			X	89	2
CPU error, LAS internal	X(Ü-CPU)			90	2
EEPROM parameter set is incorrect, calculated checksum does not match stored checksum	X(S-CPU)			91	2 from LAS 1.23
Communication error CAN Bus, LAS cannot send any more data, display and steering are not responding	X(S-CPU)			95	2
Communication error CAN Bus between LAS steering a) LAS has not received a data change for more than 200ms b) CAN - wire breakage to steering	X(S-CPU)			98	2
Electr. steering does not send "Steering active" when vehicle moves	X(S-CPU)			99	2 from LAS 1.23
Communication error CAN Bus (see FE95)	X(S-CPU)			97	2 from LAS 1.35
Steering torque too low when vehicle travelling	X(S-CPU)			94	2 from LAS 1.35

Remark: For a detailed description of the LAS errors, see sheet no. MXX.
For a detailed description of the steering errors, see sheet no. B8.

Copyright protected. No part of this manual may be reproduced in any form. Copyright reserved.

https://truckmanualshub.com/

Servicemaster

Diagnosis

Setpoint signals for the hydraulics

When Analogwerte Hydraulik (1) is selected, the setpoint signals from the joystick / 4-lever system (potentiometer signals) are displayed (2).

Remark: Because the potentiometers are "2-channel" potentiometers (see sheet no. MXX), 2 setpoint signals are always needed for one axis. When the potentiometer in question is actuated, one signal increases (e.g. S1) and the other decreases at the same time (e.g. S2).

Haupthub S1/S2 (3): Setpoint signals 1 and 2 from the main lifting potentiometer.

Schieben S1/S2 (4): Setpoint signals 1 and 2 from the reach potentiometer.

Neigen S1/S2 (5): Setpoint signals 1 and 2 from the tilting potentiometer.

Quer S1/S2 (6): Setpoint signals 1 and 2 from the mast trans. shift potentiometer.

Remark: In the version with a joystick, nothing is displayed with Quer S1/S2 (0.02V), since no potentiometer is connected here.

In the "Wert" column (7), the relevant input voltage signals are displayed (see sheet no. V15).

Neutral position:	approx. 5V
Joystick / lever pulled:	increases to approx. 8V
Joystick / lever pushed:	decreases to approx. 2V

The sum of the two signals (S1+S2) must always be within a range of 8.5V - 11V, otherwise an error is detected at the relevant potentiometer (see sheet no. V29, FE 50-53).

In the "Digit" column (8), the changed value of the internal analogue/digital converter (A/D converter) is displayed in the LAS.

You can return to the diagnosis menu with Beenden (9).

Remark: The analogue signals an also be called up on the display with the "Onboard diagnosis" (see sheet no. MXX).

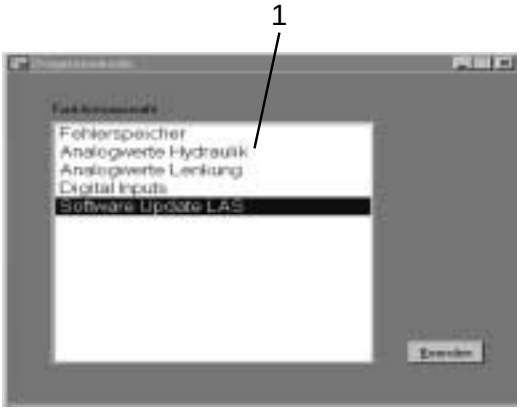

Fig. 1 1/0121

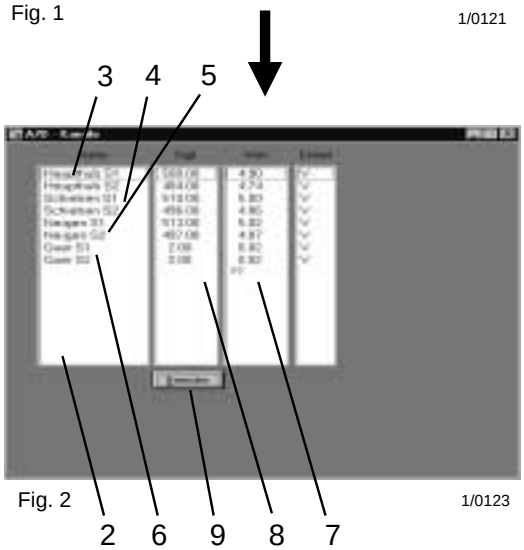

Fig. 2 1/0123

Copyright protected. No part of this manual may be reproduced in any form. Copyright reserved.

https://truckmanualshub.com/

Servicemaster

Diagnosis

Setpoint/actual value signals, steering

When Analogwerte Lenkung (1) is selected, the signals from the setpoint/actual value potentiometer are displayed (2).

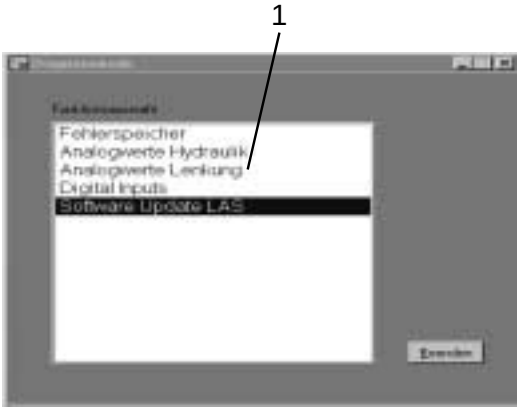

Fig. 1 1/0121

Remark: This is only possible from Servicemaster software version 1.11.
For further details about the setpoint potentiometer signals, see sheet no. B14.
For further details about the actual value potentiometer signals, see sheet no. B19
For information about the steering wheel "flutter", see sheet no. V10.

Lenkrad S1/S2 (3): Signals from the setpoint potentiometer (90° offset).

Lendrad Gleichlauf (4): Display of the flutter fluctuation of setpoints 1 and 2.

Remark: As long as the display is "green", the fluctuation is within the permissible tolerance range. Outside the permissible tolerance range, the display changes to "red" V10).

Lenkrad Querstrom (5): This is the static current that flows continually through the setpoint potentiometer. It is approx. 6-8 mA. If the deviation is more than > 2 mA, calibration of the A/D converter must be carried out (see sheet no. V8). If the current is too high or too low (short-circuit / wire breakage), the display changes from "green" to "red" (I < 5 mA / I > 18 mA).

Drehschemel S1 (6): Signal from the actual value potentiometer.

Drehschemel Querstrom (7): This is the static current that flows continually through the actual value potentiometer (see steering wheel cross-current)

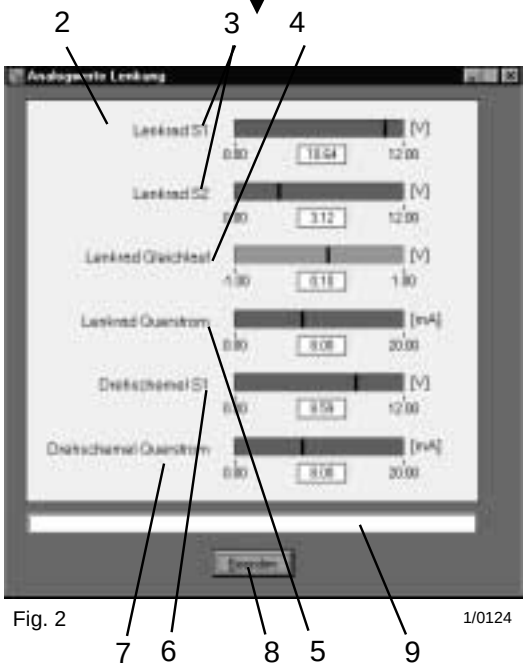

Fig. 2 1/0124

Use Beenden (8) to return to the main diagnosis menu.

Remark: The "Cross-current" query is not possible with steering versions up to and including V2.08. 0 mA is displayed here and the following message appears in the text field (9):
"Kommunikation Lenkung gestört". This is not of any significance.

Copyright protected. No part of this manual may be reproduced in any form. Copyright reserved.

https://truckmanualshub.com/

Servicemaster

Diagnosis

Input switching signals, LAS-module

When Digital inputs (1) is selected, all the input signals that are connected to the LAS-module can be tested to ensure that they function correctly.
When a signal is applied to the LAS-module, this is symbolised by the selection field (2) being filled in (in the example, the JOH signal is applied).

Use Beenden (3) to return to the main diagnosis menu.

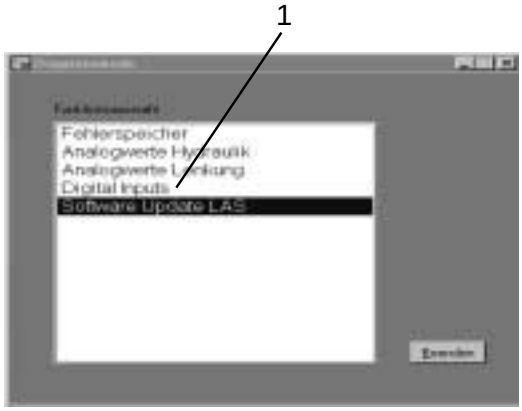

Fig. 1 1/0121

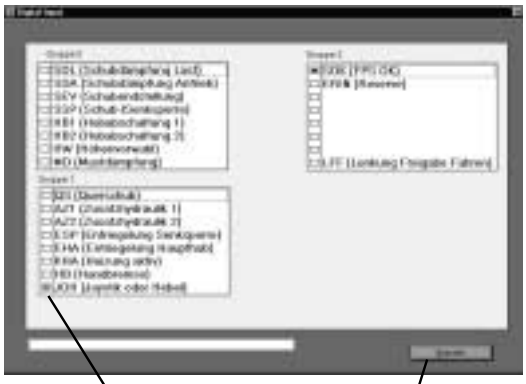

Fig. 2 1/0124

Explanation of the signals:

Remark: The abbreviations used for the signals are those used in the electrical circuit diagram.

SDL = Inductive proximity switch, reach damping, load side

SDA = Inductive proximity switch, reach damping, drive wheel side

SEV = Inductive proximity switch, reach end position, load side (option in connection with SSP)

SSP = Inductive proximity switch, lift 0.4 m for side shifting/lowering lock

HB1 = Inductive proximity switch, intermediate lift stop (option)

HB2 = Inductive proximity switch, end lift stop (option)

HW = Inductive proximity switch, reference height display (option)

MD = Mast damping (reserve)

QS = Button for selecting transverse side shift (only with joystick version, option)

AZ1 = Button for selecting additional hydraulics 1 (option)

AZ2 = Button for selecting additional hydraulics 2 (option)

ESP = Button for releasing side shifting/lowering lock (option)

EHA = Button for releasing intermediate lift stop (option)

KHA = Thermostat switch for heating on (cold store option)

HB = Switch for electromagn. brake open/closed

JOH = Joystick coding

SOK = FPS OK

ERIN = Reserve

LFF = Steering OK (enable travel)

Remark: The LFF signal is included from Servicemaster Software V1.23. It is a signal that is sent via the CAN bus from the steering to the LAS-module. It is sent when the swiching signal "Steering OK" is set (see sheet no. B4).

Copyright protected. No part of this manual may be reproduced in any form. Copyright reserved.

https://truckmanualshub.com/

Servicemaster

Diagnosis

LAS software update

The basic software of the main computer in the LAS-module can be updated by selecting Software Update LAS (1). This software update puts the LAS-module into a kind of "New status", i.e. all the data that has previously been stored is deleted!
For this reason, the sequence in this process must be maintained exactly as described below.

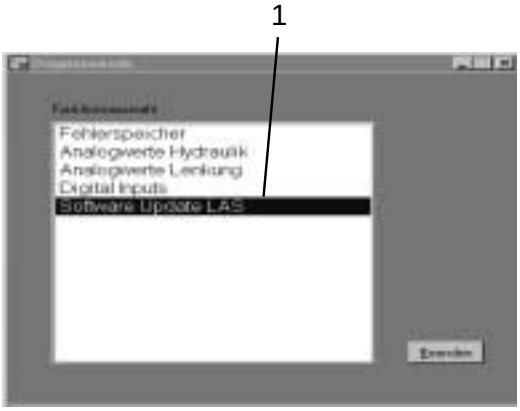

Fig. 1 1/0121

Note: The Servicemaster software V1.11 is not 100% compatible with the LAS-module main computer version V1.0 or V1.01.
If the LAS-module is fitted with these versions, a "data download" to the LAS-module is not possible. The error message "Übertragung nicht erfolgreich" (2) appears.
In this case, a software update on the module must be carried out without fail.
The software version in the LAS-module can be called up on the display with the "Onboard diagnosis" (see sheet no. MXX)

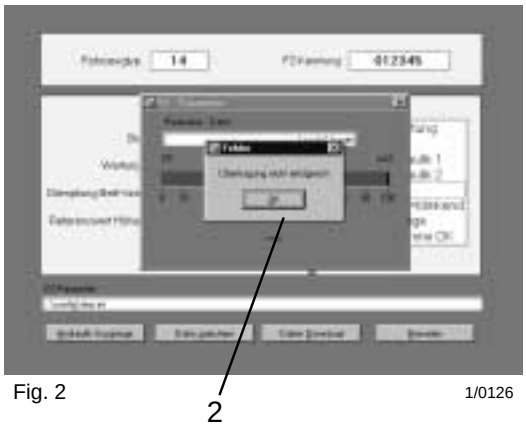

Fig. 2 1/0126

Remark: The principle described here for updating the software on LAS-module version 1.23 also applies for future updates. It is important for the relevant "update file (hex file)" to be stored in the "c:\FmService\Src" directory!

Procedure for update

- Connect the computer to the diagnosis interface on the vehicle (see sheet no. V3) and start the Servicemaster. Use the Parameter - Daten Upload function (3) to load the data out of the LAS module.

Remark: The upload process is displayed as a graphic (4)!

Fig. 3 1/0085

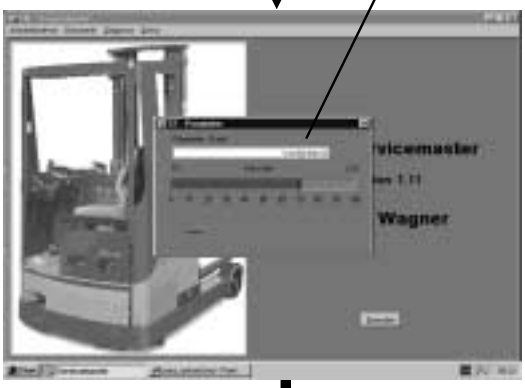

Fig. 4 1/0127

Copyright protected. No part of this manual may be reproduced in any form. Copyright reserved.

https://truckmanualshub.com/

Servicemaster

Diagnosis

LAS software update

- Store the data as a vehicle-related file with Datei speichern (1), e.g. 87364.ini (Fig. 2, see sheet no. V20).

Remark: The vehicle number is stamped into the side shift carriage below the right-hand mast bearing.

- When the save operation is complete, click on Beenden (2).
- Select Diagnosis - Standard (3) and in the next window click on Software Update LAS (4).
- Confirm the next message, which is "Software Update LAS starten", with OK . The update process can be aborted with Abbruch .
- As instructed in the next message, "Fahrzeug kurz aus / einschalten" (switch the vehicle off briefly and then on again). Then confirm this process with OK . The Abbruch Button can also be used here to stop the process.

Fig. 1 1/0114

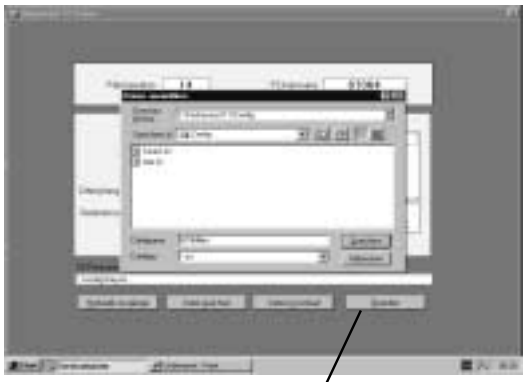

Fig. 2 1/0117

Fig. 3 1/0086

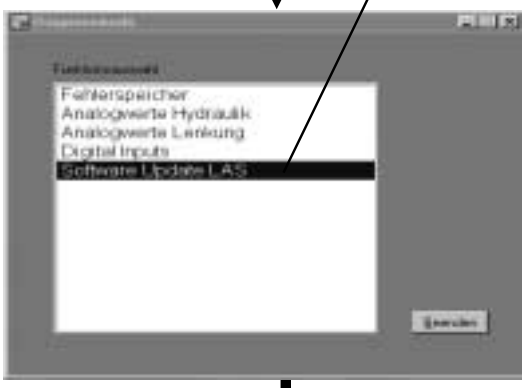

Fig. 4 1/0121

Copyright protected. No part of this manual may be reproduced in any form. Copyright reserved.

https://truckmanualshub.com/

Servicemaster

Diagnosis

LAS software update

- In the window that has now opened - "HEX-Datei auswählen" (1), select the "LasDc123.hex" file (2) (for update to V1.23). The software update can be started with the Load button (3).

Remark: Additional hex files can also be stored here for further updates in the future (e.g. LasDc124.hex). The relevant file must then be selected.

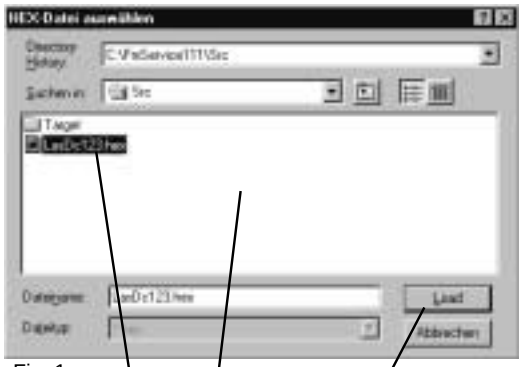

Fig. 1 1/0128

- The progress of the update can be followed on the bar chart display (4) (takes about 3 mins.).
- Confirm the final message with OK .

Remark: The final image that now appears continues to be displayed until the mouse is activated briefly!

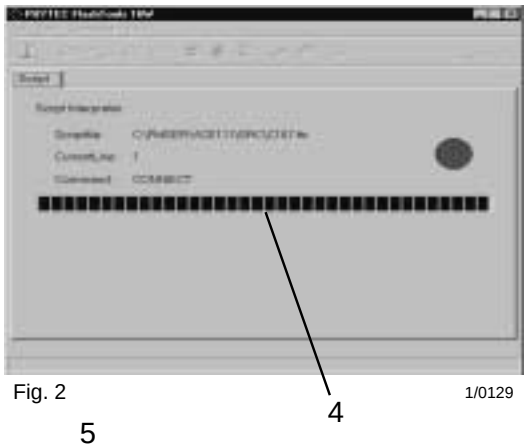

Fig. 2 1/0129

- In the "DIAGNOSIS MODE" window, which is now available again, click on Beenden . You are now back in the "Servicemaster start menu" again.
- Switch the vehicle off and then on again.
- When the vehicle is switched on again, the error message "FE55" appears on the vehicle display and "-------" is shown on the height display.

Remark: If "FE 91" appears, it must first be deleted from the error memory (see sheet no. V27). Then continue with the next step.

- The LAS-module must now be "put into operation" again. Start this process with "Inbetriebnahme - Hydraulik" (5).
- In the "Typauswahl" window, select the Datei laden button (6).

Fig. 3 1/0084

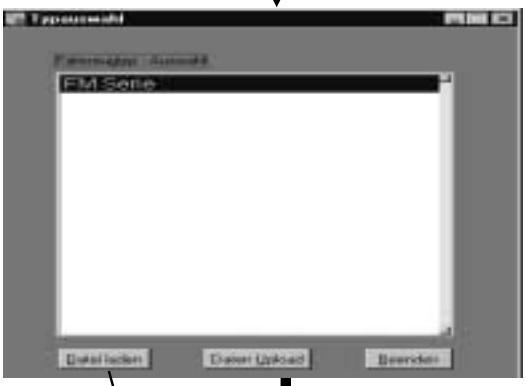

Fig. 4 1/0110

Copyright protected. No part of this manual may be reproduced in any form. Copyright reserved.

https://truckmanualshub.com/

Servicemaster

Diagnosis

LAS software update

- Select the file that was previously saved (in this example 87364.ini) and load it with the Select button (1).
- In the "Commissioning" window, click on the Nullfenster übernehmen command and then use the Daten Download button to transfer the vehicle data back into the LAS-module.
  The transfer process can be observed on the red progress bar.
- When the transfer is complete, conclude the process with the Beenden button.
  Also close the next window (Typauswahl) with Beenden .
- Use "Diagnose - Standard" to read out the error memory of the LAS-module (2) and reset the error memory with Löschen (3).
- Use the Beenden (4) button to close diagnosis mode and the Servicemaster software in general.

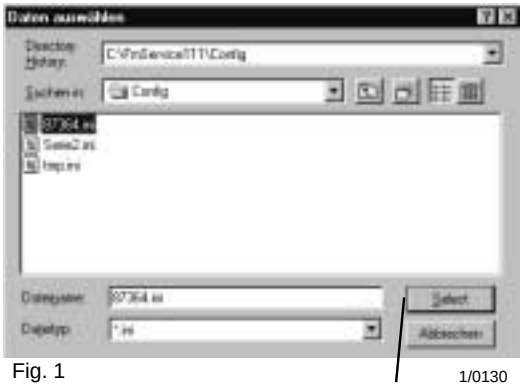

Fig. 1 1/0130

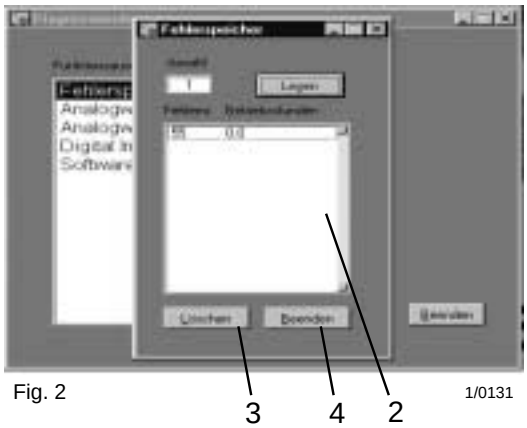

Fig. 2 1/0131

You can then check that the update has been carried out successfully with the "Onboard diagnosis".
To do so, select the "Software query" menu point (menu point 5) with the display keyboard.
If the software has been updated to version V1.23, the code "5L 1.23" should appear on the display (see sheet no. MXX). Similarly, if the software has been updated to another version, the relevant number should appear.

Copyright protected. No part of this manual may be reproduced in any form. Copyright reserved.

https://truckmanualshub.com/

WinPuls E

Menu guide

Fig. 1 1/0146

This software is needed for the FPS for the following:

- Changing travel parameters (speed, acceleration, deceleration).
- Reading-in accelerator pedal (teaching-in).
- Programming the hour counter.
- Reading / deleting error messages
- Reading data out of the FPS and storing as a file
- Sending data from a file to the FPS.
- Diagnosis

Main menu

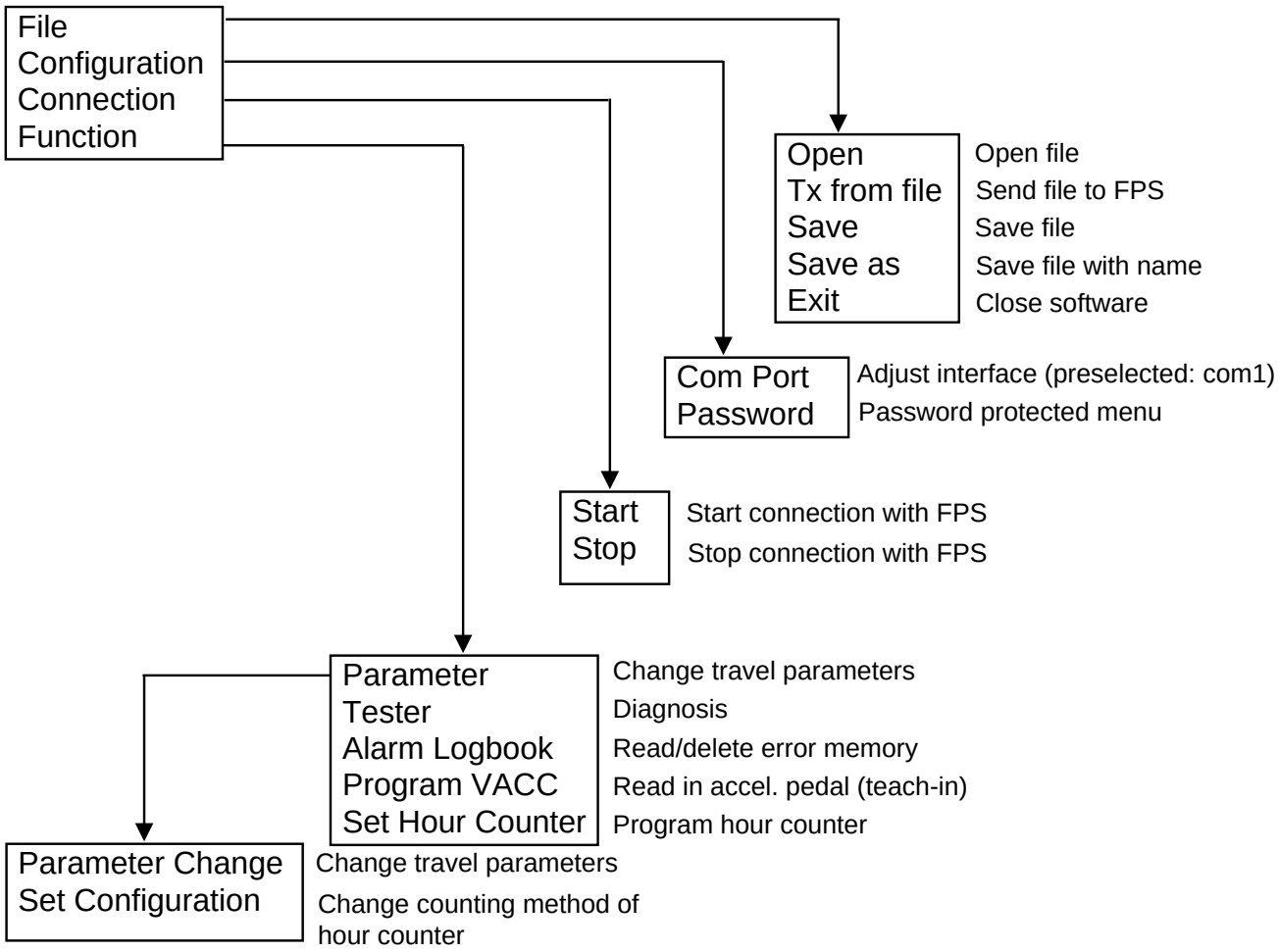

Copyright protected. No part of this manual may be reproduced in any form. Copyright reserved.

https://truckmanualshub.com/

WinPulsE

Starting/stopping connection to FPS

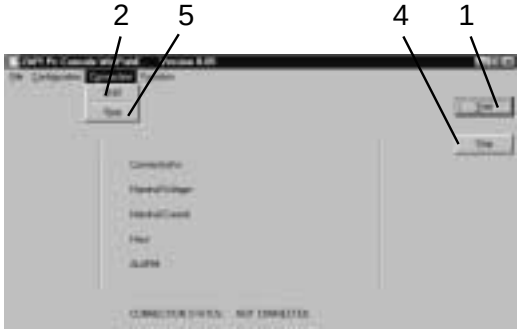

Fig. 1 1/0147

Fig. 2 1/0118

- Click on the Start button (1) with the mouse.

OR

- Click on Start (2) in the "Connection" menu.

The following information appears on the display (3):

Remark: It is a prerequisite that the computer must be connected to the diagnosis interface (see sheet no. V3).

- Connect to: **COMBIWAG.V2.02**
  (current vehicle software version, can vary)
- Nominal voltage: 48V
- Nominal Current: 300A
- Hour XXXh
  (Display of the actual operating hours of the FPS)
- Alarm:
  (if fitted, current error as full text)
- CONNECTION STATUS: CONNECTED
  (Status display to indicate that a connection has been made to the FPS or, if not connected:
  NOT CONNECTED)

Breaking the connection

- Click on the Stop button (4) with the mouse.

OR

- Click on Stop (5) in the "Connection" menu.

Copyright protected. No part of this manual may be reproduced in any form. Copyright reserved.

https://truckmanualshub.com/

WinPulsE

Reading data out of the FPS (Receive from RAM)

Before adjustments can be made, the data must be read out of the FPS.

- In the menu bar, click on "Function" and then "Parameters" (1).
- In the window that then opens, click on the Receive from RAM button(2).
- The parameters are read out of the FPS. This takes about 25 secs.
- The parameters are then available (3).
- To close the active window, click on the Close (4) button.

Remark: Once the data has been read out of the FPS, the parameters and configuration can be changed. It is also possible to store the complete data set (see sheet no. V40, 41). If there is no User_Comment (5) in the "Parameter change" window, the data is from the FPS. If there is a comment, the data is from a vehicle file that has previously been opened by the computer.

Fig. 1 1/0149

Fig. 2 1/0150

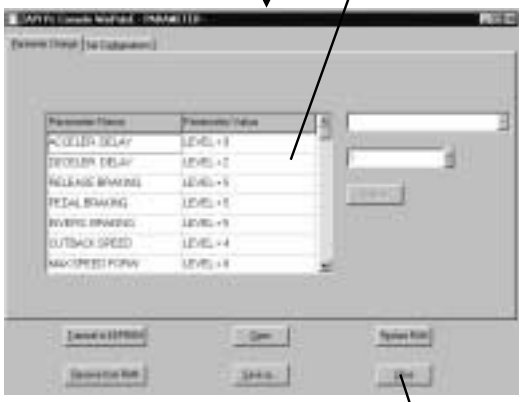

Fig. 3 1/0151

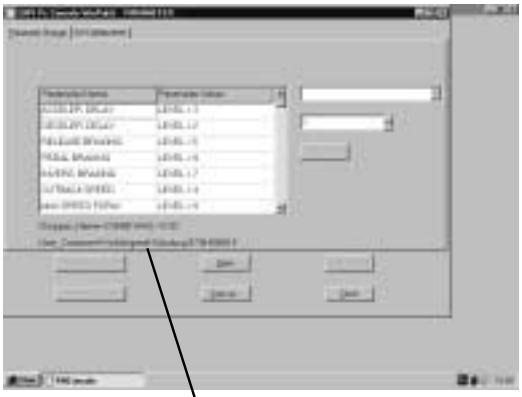

Fig. 4 1/0152

Copyright protected. No part of this manual may be reproduced in any form. Copyright reserved.

https://truckmanualshub.com/

WinPulsE

Saving/opening a data set on the computer

Saving the data with "menu" (Save as...)

Before data can be stored, the data must be read out of the FPS (see sheet no. V39).

- In the "File" menu, click on "Save as..." (1).
- A dialogue window called - Save File - (2) opens.
- In this window, a name must be entered in the "File name" input field (3) (e.g. veh. no. 12345).

Remark: The vehicle number is stamped into the side shift carriage below the right-hand mast bearing.

- In the "Save in" input field (7), another directory can be selected in whch the file is to be stored (e.g. customer directory). The standard setting is the WinPulsE directory.
- The file can be saved in the selected directory with the Save (5) button.
- Finally, an additional text can be entered in another dialogue window - Enter a Command - (6). This window must be confirmed with OK (7).
- The saving operation can be aborted with the Quit button (8).

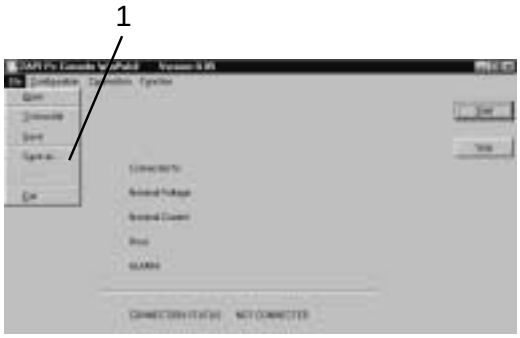

Fig. 1 1/0153

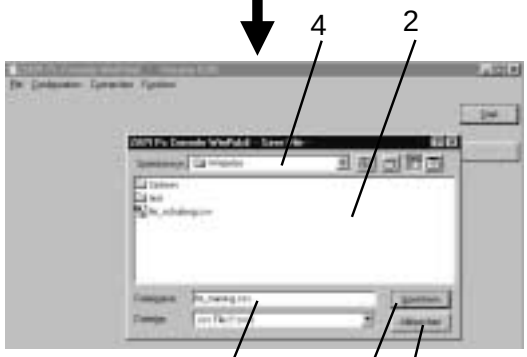

Fig. 2 1/0154

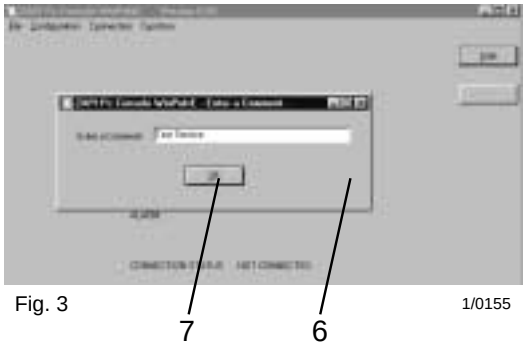

Fig. 3 1/0155

Copyright protected. No part of this manual may be reproduced in any form. Copyright reserved.

https://truckmanualshub.com/

WinPulsE

Saving/opening a data set on the computer

Saving the data with "Parameter" (Save as...)

- In the menu bar, click on "Function" and then "Parameter" (1) klicken
- The "Parameter Change" window (2) opens.

Remark: In the event that no data has yet been read out of the FPS, a "Receive from RAM" (3) must be carried out (see sheet no. V39).

- Select the [Save as....] button
- The - Save as... - dialogue window (5) opens.
- A name must be entered here in the "File name" input field (6) (e.g. Veh. no. 12345).

Remark: The vehicle number is stamped into the side shift carriage below the right-hand mast bearing.

- In the "Save in" input field (7), another directory can be selected in whch the file is to be stored (e.g. customer directory). The standard setting is the WinPulsE directory.
- The file can be saved in the selected directory with the [Save] (8) button.
- Finally, an additional text can be entered in another dialogue window - Enter a Command - (6). This window must be confirmed with [OK] .
- The saving operation can be aborted with the [Quit] button (9).

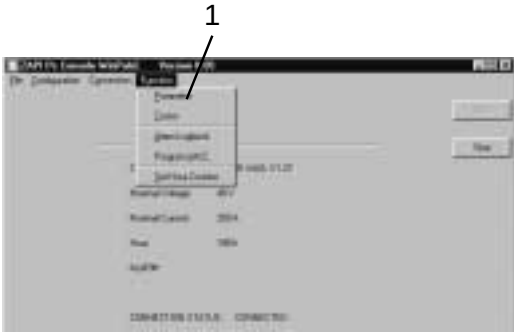

Fig. 1 1/0149

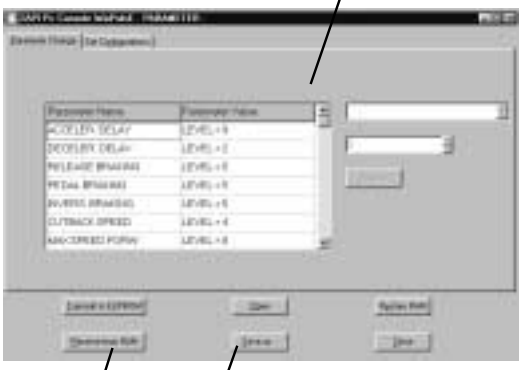

Fig. 2 1/0151

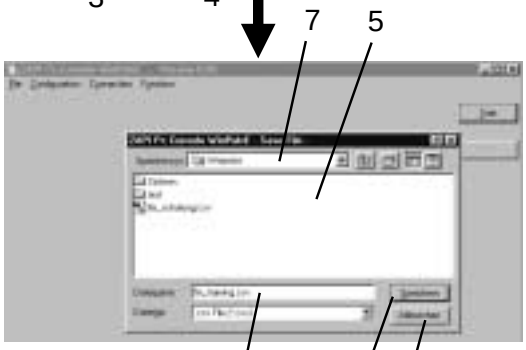

Fig. 3 1/0154

Copyright protected. No part of this manual may be reproduced in any form. Copyright reserved.

https://truckmanualshub.com/

WinPulsE

Saving/opening a data set on the computer

Opening a data set (file) (Open)

There are 2 means of opening a file that has previously been saved.

Option 1:

- In the menu bar, click on "File" and then "Open" (1).
- The "Open" window (2) opens.
- In the "Search in" input field (3), select the directory in which a vehicle file has been stored, e.g. the customer directory. All the saved files are listed in the selection window (4).

Remark: The standard setting is the WinPulse directory.

- Select the file you want (5). This should appear in the "File name" window (6).
- The file can be read in with the Open (7) button. The "Parameter Change" window (8) opens and the parameters are displayed (9).
- There is a User_Comment (10) under the selection window that was entered when the file was saved (see sheet no. V40).

Remark: A file that is opened in this way cannot be loaded directly into the FPS. It can only be changed!

Fig. 1 1/0153

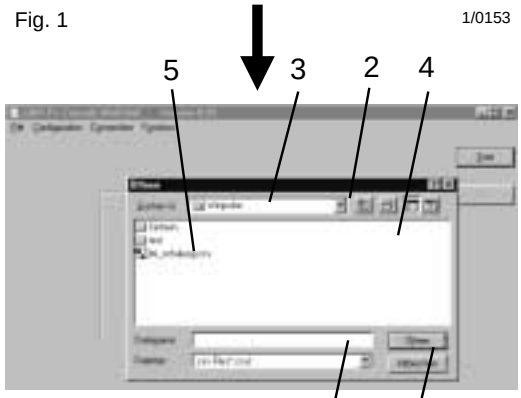

Fig. 2 1/0156

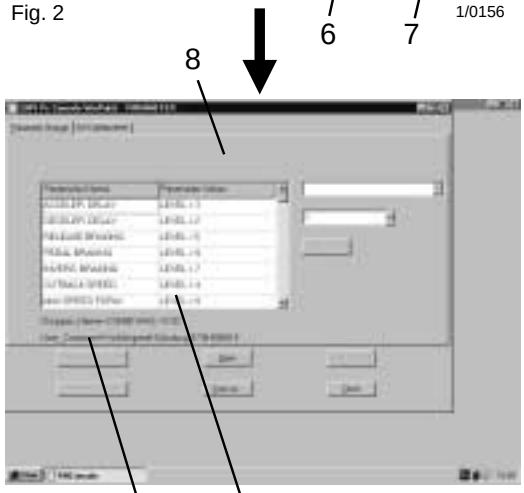

Fig. 3 1/0152

Copyright protected. No part of this manual may be reproduced in any form. Copyright reserved.

https://truckmanualshub.com/

WinPulsE

Saving/opening a data set on the computer

Opening a data set (file) (Open)

Option 2:

Alternatively, the file can be opened from the "Parameter Change" window (1).

- Select the Open button (2). The "Open" window (3) appears.
- In the "Search in" input field (4), select the directory in which a vehicle file has been stored, e.g. the customer directory. All the saved files are listed in the selection window (5).

Remark: The standard setting is the WinPulse directory.

- Select the file you want (6). This should appear in the "File name" window (7).
- The file can be read in with the Open (7) button. The "Parameter Change" window (9) opens and the parameters are displayed (9).
- There is a User_Comment (10) under the selection window that was entered when the file was saved (see sheet no. V40).

Remark: A file that is opened in this way cannot be loaded directly into the FPS. It can only be changed!

- The current window can be quit by selecting the Close (11) button.

Fig. 1 1/0150

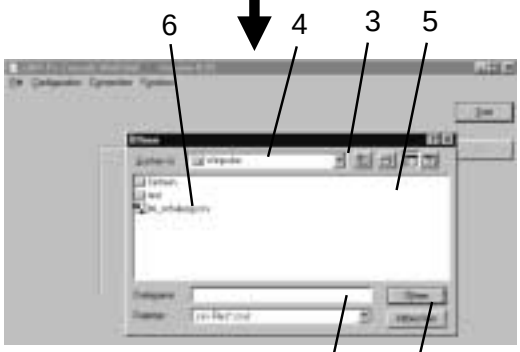

Fig. 2 1/0156

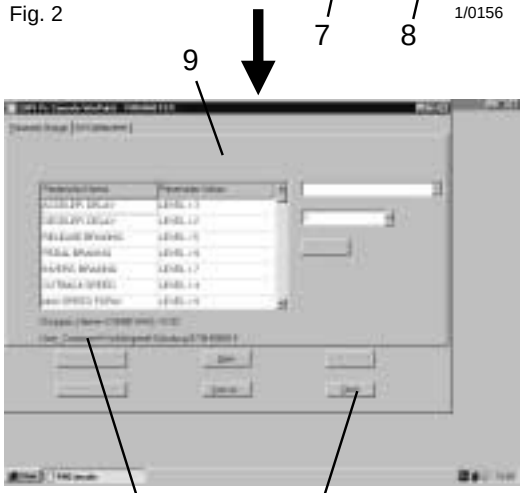

Fig. 3 1/0152

Copyright protected. No part of this manual may be reproduced in any form. Copyright reserved.

https://truckmanualshub.com/

WinPulsE

Saving/opening a data set on the computer

Saving a data set (file) (Save)

The file that has previously been opened and possibly modified (see sheet nos. V42, 43) can be stored under the same name again.

- In the menu bar, click on "File" and then "Save" (1).
- The file that has been opened and possibly changed is overwritten immediately.

Fig. 1 1/0153

Copyright protected. No part of this manual may be reproduced in any form. Copyright reserved.

https://truckmanualshub.com/

WinPulsE

Saving data in the FPS

Sending a data set (file) directly to the FPS (Tx from file)

Before data can be transmitted, the connection must be made (see sheet no. V38)

- In the menu bar, click on "File" and then "Tx from file" (1).
- The "Open" window (2) appears.
- In the "Search in" input field (3), select the directory in which a vehicle file has been stored, e.g. the customer directory. All the saved files are listed in the selection window (4).

Remark: The standard setting is the WinPulse directory.

- Select the file you want (5). This should appear in the "File name" window (6).
- The Open button(7) opens the -Tx from file Confirmation - window (8) with "Are you sure?" (safety query) .
- The process can be aborted with the No button (9).
- The file can be sent directly to the FPS with the Yes button (4).
- When the transmission process is complete, the relevant information window is automatically faded out.
- The new parameters can be tested immediately.

Fig. 1 1/0153

Fig. 2 1/0156

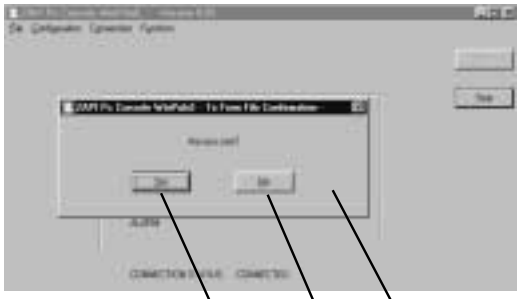

Fig. 3 1/0157

Copyright protected. No part of this manual may be reproduced in any form. Copyright reserved.

https://truckmanualshub.com/

WinPulsE

Changing the parameters (Parameter Change)

Reading parameters out of FPS and changing them (Receive from RAM)

Before parameters can be changed, a connection must be made (see sheet no. V38). Data must be read out of the FPS (see sheet no. V39) or a vehicle file must be opened (see sheet no. V42).

Procedure for "Data from the FPS":

- In the menu bar, click on "Function" and then "Parameter" (1).
- The - Parameter Change - window (2) opens.
- Select the Receive from RAM button (3); the data is read out of the FPS (see sheet no. V39).

Remark: This process is only necessary if no data has yet been read out of the FPS or if no vehicle file has yet been opened.

- In the selection window (4), use the scroll bar (6) to find the parameter you need (5) and then click on it.

Remark: The selected parameter is displayed in the selection window with its name and the value that is currently set (7), and is active for alteration (for a list of parameters, see sheet no. V 48)

- The current value can be changed with the selection fields (8).

OR

- By using the + or - keys on the keyboard.

OR

- By double clicking the mouse in the change window (9) - the background to the number then turns blue - and entering a value between 0 and 9 (see list of parameters on sheet no. V48) directly in the window.

Remark: Parameters changed in this way can be tested immediately, since they are written directly into the RAM of the FPS.

Fig. 1 1/0149

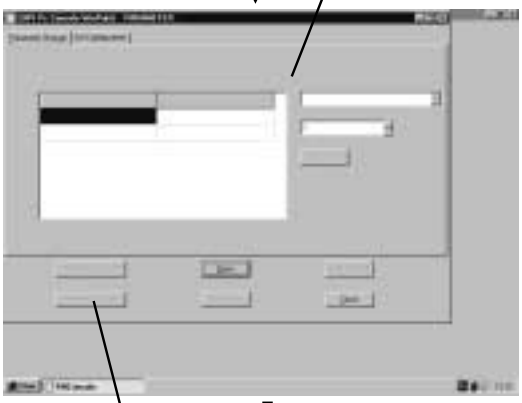

Fig. 2 1/0150

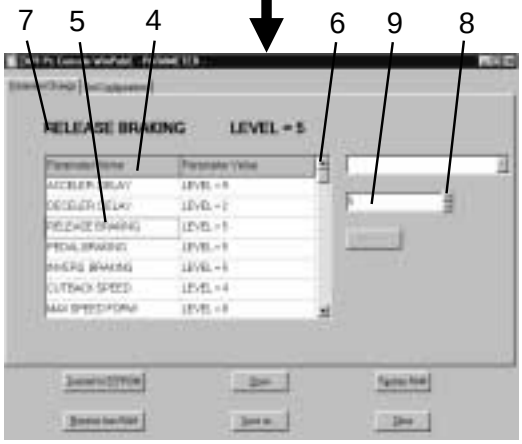

Fig. 3 1/0158

Copyright protected. No part of this manual may be reproduced in any form. Copyright reserved.

https://truckmanualshub.com/

WinPulsE

Changing the parameters
(Parameter Change)

Saving parameters in the FPS
(Transmit to EEPROM)

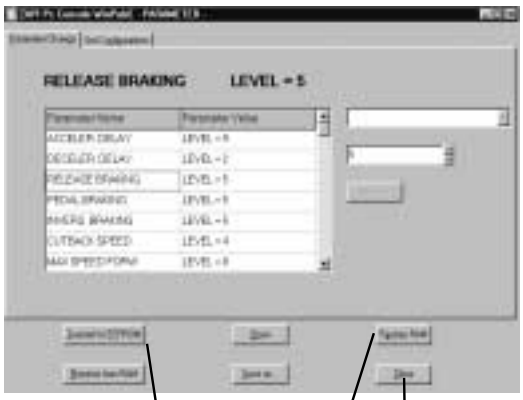

Fig. 1 1/0158

1 3 2

If the changed / tested parameters are in order, they must be stored permanently in the FPS (in the EEPROM of the FPS).

- Select the Transmit to EEPROM button (1). The data is written into the FPS. This is indicated by a brief "flashing" of the button.
- Use the Close button (2) to close the window and return to the "Start mask".

Restoring parameters (Restore RAM)

When the parameters have been changed (see sheet no. V46), the values that were originally read in with the "Receive from RAM" command can be restored. To do so, select the Restore RAM button (3).

Remark: This function is only possible if no "Transmit to EEPROM" has been carried out in the meantime, i.e. the parameters are not yet stored permanently in the FPS.

Copyright protected. No part of this manual may be reproduced in any form. Copyright reserved.

https://truckmanualshub.com/

WinPulsE

Changing parameters
(Parameter Change)

List of parameters

Table of the adjustable parameters

Parameter	Einheit	Wert										Factory setting
		0	1	2	3	4	5	6	7	8	9	
Acceler Delay	sec.	0.3	0.6	0.9	1.3	1.6	1.9	2.2	2.5	2.8	3.1	3
Deceler Delay	sec.	6.1	6.3	6.5	7.0	7.4	8.1	8.8	9.7	10.6	11.5	2
Release Braking	sec.	soft									hard	5
Pedal Braking	sec.	soft									hard	9
Inverse Braking	sec.	soft									hard	7
CutBack Speed	% Vmax	min									max	4
Max Speed Forw.	km/h	min									max	9
Max Speed Back.	km/h	min									max	9
Traction Imax*	A	247	252	257	262	267	273	280	287	293	300	5
Creep Speed	% PWM	2.3	3.5	4.7	5.9	7.0	8.2	9.4	10.6	11.8	12.9	0
Pump Imax.	A	329	335	342	349	355	364	373	382	391	400	8

*__***Remark:***__ If the drive motor armature current is to be measured (see sheet no. M18).

Explanation of parameters:

Acceler. Delay:	The time needed for the vehicle to reach the required speed.
Deceler. Delay:	Braking when the accelerator position is changed
Release braking:	Generator brake when accelerator pedal /deadman switch is released
Pedal braking:	Generator brake when foot brake pedal is pressed
Inverse braking:	Braking when the travel direction is changed
CutBack speed:	Speed for CutBack travel (adjustable between approx. 1.5 and 3.5 km/h)
Max Speed forw.:	Maximum speed forwards (adjustable between approx. 7.5 and 11 km/h)
Max Speed back.:	Maximum speed reverse (adjustable between approx. 7.5 and 11 km/h)
Traction Imax:	Drive motor armature current
Creep speed:	Minimum speed, slight movement of accelerator pedal
Pump Imax:	Pump motor current

Copyright protected. No part of this manual may be reproduced in any form. Copyright reserved.

https://truckmanualshub.com/

WinPulsE

Changing the configuration
(Set Configuration)

Changing the configuration

Before the configuration can be changed, a connection must be made (see sheet no. V38). The data must be read out of the FPS (see sheet no. V39) or a vehicle file must be opened (see sheet no. V42).

Procedure for "Data from the FPS":

- In the menu bar, click on "Function" and then "Parameter" (1).
- The -Parameter- window (2) opens.
- In the -Parameter- window, click on "Set Configuration" (3). The input window opens (4).
- Select the Receive from RAM button (5), and the data is read out of the FPS.

Remark: This process is only necessary if no data has yet been read out of the FPS or if no vehicle file has yet been opened.

- In the selection window (6), click on the "Hour Counter" parameter (7).

Remark: The selected parameter is displayed in the selection window with its name and the option that is currently set (8), and is active for alteration.

- The arrow key (9) can be used to display the options that can be set (10) and to change them:

  - Keyon: Hour counter counts when key switch ON
  - Running: Hour counter only counts when a motor is driven by the FPS
  - Running and Lowering : The hour counter counts when the motors are driven or the main lift lowering function is active

Fig. 1 1/0149

Fig. 2 1/0150

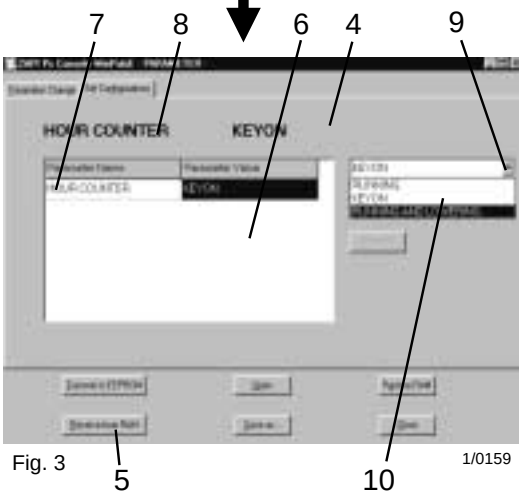

Fig. 3 1/0159

Copyright protected. No part of this manual may be reproduced in any form. Copyright reserved.

https://truckmanualshub.com/

WinPulsE

Changing the configuration
(Set Configuration)

Saving the configuration in the FPS
(Transmit to EEPROM)

Remark: In order to test the changed configuration or to store it in the FPS, the data must be sent to the FPS. The complete data set is always sent.

- In the -Set Configuration- window (1), click on the Transmit to EEPROM button (2).
  The data is written into the FPS. This is indicated by a brief "flashing" of the button.
- Use the Close button (3) to quit the active window.

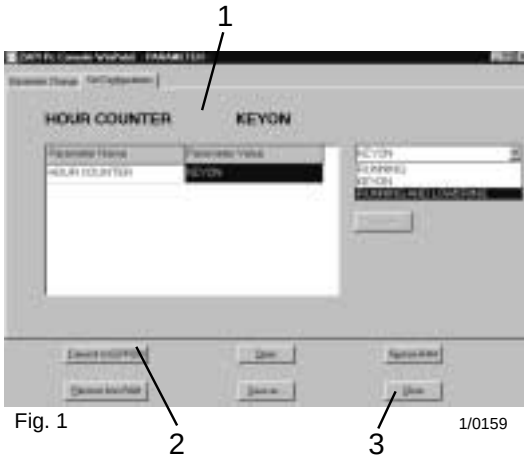

Fig. 1 1/0159

Copyright protected. No part of this manual may be reproduced in any form. Copyright reserved.

https://truckmanualshub.com/

WinPulsE

Reading in the accelerator pedal
(Program VACC)

Remark: This process must be carried out every time the accelerator pedal is replaced.

Before the accelerator pedal can be read in (teaching-in), the connection must be made (see sheet no. V38).

Procedure:

- In the menu bar, click on "Function" and then "Program VACC" (1).
- The -Program VACC- window (2) opens.
  The max./min. values (3) that are currently stored are displayed.
- Use the Acquire button (4) to start the teaching-in process. The min./max. values are set to zero.
- Press the accelerator pedal slowly and constantly through to the end stop. The min./max. values are automatically adopted (3).
- The -Save min/max- window (6) can be opened with the Save min/max button (5).
- The values can be stored in the FPS with the Yes command (7).
- The process can be aborted with the No command (8).
- Use the Close button (3) to quit the active window.

Fig. 1 1/0149

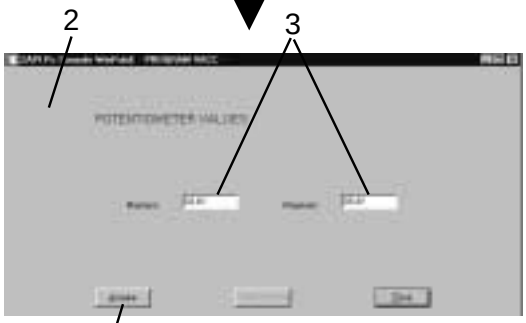

Fig. 2 1/0160

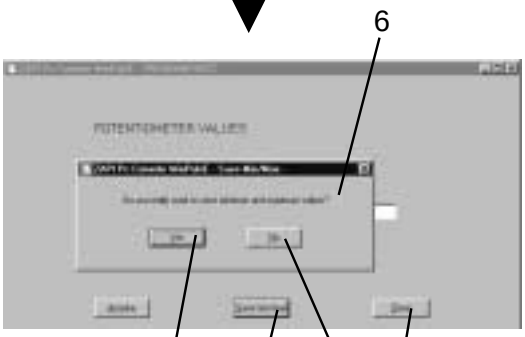

Fig. 3 1/0161

Copyright protected. No part of this manual may be reproduced in any form. Copyright reserved.

https://truckmanualshub.com/

WinPulsE

Test function
(Tester)

Remark: Display function for various FPS signals.
No settings can be made in this function.

- In the menu bar, click on "Function" and then "Tester" (1).
- The -Tester- window (2) opens.
  The data for the tester is read automatically out of the FPS.
- In the selection window (3), use the scroll bar (4) to find the function you require and click on it with the mouse. The function is automatically displayed in the "Test name" test window (5) with the corresponding "Test value" (6).

Remark: A maximum of 4 functions can be displayed at one time. If you wish to display more functions, one or all the functions must first be deleted.

- Click on the function you want to delete with the mouse. The background to the function turns blue, e.g. "Brake switch" (7).
- Use the Clear Signal button (8) to delete the selected function.
- The Clear all button (9) deletes all the selected test points from the display window (10).
- Use the Close button (3) to quit the active window.

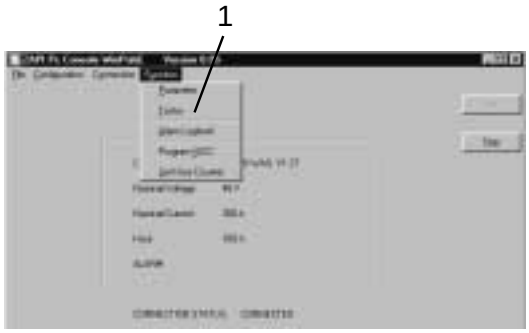

Fig. 1 1/0149

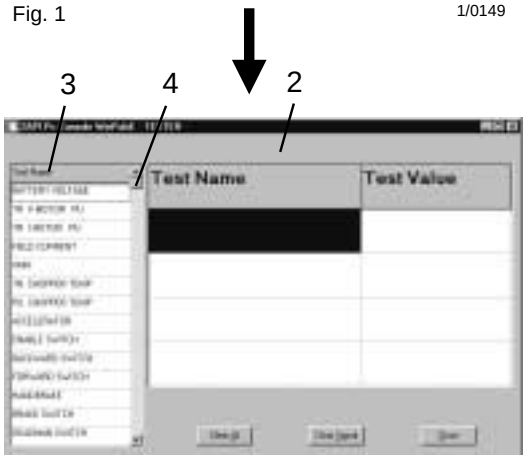

Fig. 2 1/0162

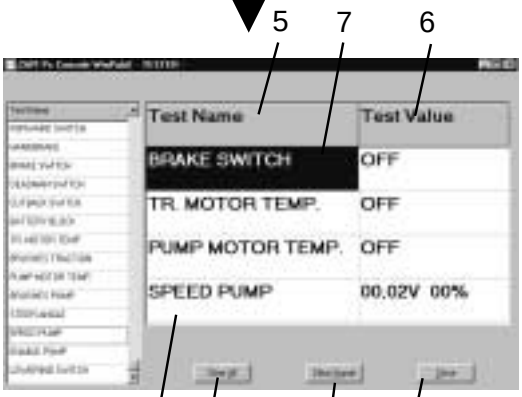

Fig. 3 1/0163

Copyright protected. No part of this manual may be reproduced in any form. Copyright reserved.

https://truckmanualshub.com/

WinPulsE

Test function
(Tester)

Guide to test functions

Available test points	Displayed value	
BATTERY VOLTAGE	Battery voltage value	V
TR V MOTOR PU	Drive motor - pump motor - voltage (armature)	...V ...V
TR I Motor PU *	Drive motor - pump motor - current (armature)	...A ...A
FIELD CURRENT	Drive motor field current	...A
VMN	Timed negative drive motor (armature)	...V
TR CHOPPER TEMP	Temperature - travel amplifier	...°C
PU CHOPPER TEMP	Temperature - pump amplifier	...°C
ACCELERATOR	Travel potentiometer voltage (4.0 - 9.6 V, depending on accelerator pedal)	...V ...%
ENABLE SWITCH	Micro-switch, accelerator pedal (ON / OFF) ON - switch closed	ON/OFF
BACKWARD SWITCH	Travel direction switch, reverse (ON / OFF) ON - travel direction selected	ON/OFF
FORWARD SWITCH	Travel direction switch, forwards (ON / OFF) ON - travel direction selected	ON/OFF
HANDBRAKE	Switch for electro-magn. brake open / closed ON - brake open (switch closed)	ON/OFF
BRAKE SWITCH	Micro-switch, brake pedal OFF - brake pedal not actuated (switch closed)	ON/OFF
DEADMAN SWITCH	Deadman switch (ON/OFF) ON - Deadman switch actuated	ON/OFF
CUTBACK SWITCH	Cutback switch OFF - no cutback travel (switch closed)	ON/OFF
BATTERY BLOCK	Micro-switch, battery lock OFF - locked (switch closed)	ON/OFF

*In the display, the currents are exchanged, i.e. if the pump motor is driven, the current is displayed under the drive motor!

Copyright protected. No part of this manual may be reproduced in any form. Copyright reserved.

https://truckmanualshub.com/

WinPulsE

Test function
(Tester)

Guide to test functions

Available test points	Displayed value	
TR MOTOR TEMP	Temperature monitoring for drive motor (ON / OFF) OFF - Temperature OK (sensor closed)	ON/OFF
BRUSHES TRACTION	Carbon brush monitoring, drive motor (ON / OFF) OFF - Carbon brushes OK (sensor closed)	ON/OFF
PUMP MOTOR TEMP	Temperature monitoring, pump motor (ON / OFF) OFF - Temperature OK (sensor closed)	ON/OFF
BRUSHES PUMP	Carbon brush monitoring, pump motor (ON / OFF) OFF - carbon brushes OK (sensor closed)	ON/OFF
STEER ANGLE	No function	
SPEED PUMP*	Pump setpoint (from LAS-module) and pump motor speed 0.00V Perc. = 0%	
ENABLE PUMP	Enable pump (from LAS-module) (ON / OFF) ON - enable signal applied	ON/OFF
LOWERING SWITCH	Lowering counter info. (from LAS-module) (ON/OFF) ON - lowering information available	ON/OFF

*Only half the value is displayed, since the LAS-module specifies max. 10V setpoint, but only 5V is displayed!

Copyright protected. No part of this manual may be reproduced in any form. Copyright reserved.

https://truckmanualshub.com/

WinPulsE

Reading out the error memory (Alarm Logbook)

Remark: This is the display function for errors that have occurred.
No adjustments can be made in this function.

- In the menu bar, click on "Function" and then "Alarm Logbook" (1).
- The Alarm Logbook window (2) opens.
  The data for the logbook is automatically read out of the FPS.
- The stored FPS errors are shown in plain text in the display window (3).

Alarm Name (4):	Error message in plain text (see sheet no. V56).
Repetitions (5):	Counter for frequency with which the error has occurred.
Temperature (6):	FPS temperature when the error occurred
Hour (7):	Time (FPS-internal hour counter), at which the error occurred.

- The error memory can be read out again with the Update button (8).
- The Clear button (9) first calls up a safety query (10), so that the error memory can subsequently be deleted.
- The error memory can be deleted with Yes (11).
- The deletion process can be aborted with No (12).
- The Close button (13) closes the active window.

Remark: A maximum of 5 different errors can be displayed. If a new error occurs, this is put in 1st place and the last error is deleted.
When an error has occurred, it is shown in the display window (14) and on the display in the form of an error code (FE XX).

Fig. 1 1/0149

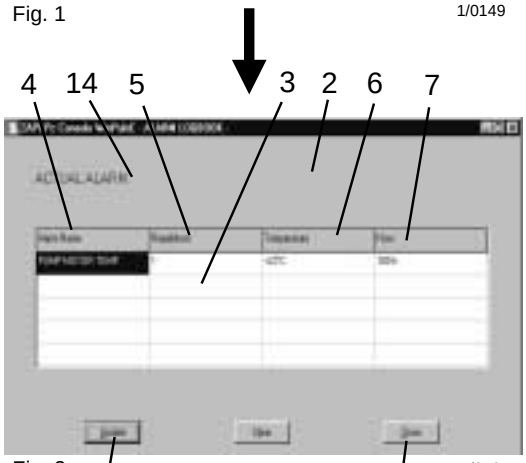

Fig. 2 1/0164

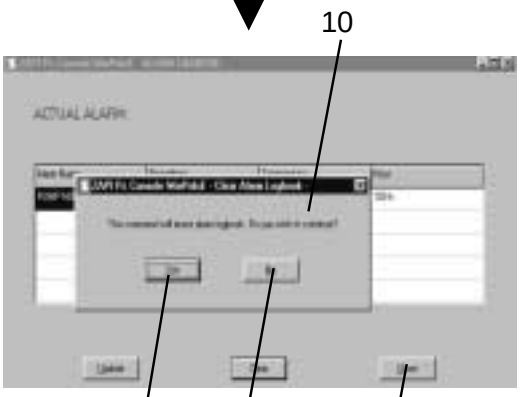

Fig. 3 1/0165

Copyright protected. No part of this manual may be reproduced in any form. Copyright reserved.

https://truckmanualshub.com/

WinPulsE

Table of error codes

Message/error code	Main contactor	Description	Possible cause	Possible action
Batterie offen (FE01) (Battery lock) see M24	Does not drop out	Battery lock not locked	•Micro-switch faulty •Wiring •Logic board, FPS	→ Check/replace → Check/replace → Replace FPS
Falsche Reihenfolge (FE06) (Incorrect Start) see M24	Does not drop out	Start sequence not in order (deadman switch, accelerator pedal)	•Micro-switch error, accelerator pedal •Foot switch error •Wiring error •Logic board, FPS	→ Check/replace → Check/replace → Check → Replace FPS
Pedalspg. nicht i.O. (FE07) (VACC not ok) see M25	Does not drop out or stays open on switching on	The setpoint of the travel potentiometer is > 1V than the minimum programmed value as long as the enable switch is open	•Teaching-in not carried out •Potentiometer wrongly adjusted •Enable switch does not close •FPS logic board faulty	→ Carry out → Check/replace → Check/replace → Replace FPS
Bereich Pedalspg. (FE08) (ACC out of range) see M25	Does not drop out or stays open on switching on	Travel setpoint is outside the planned range (4-9.6V)	•Travel potentiometer faulty •FPS logic board faulty	→ Check/replace → Replace FPS
EEPROM KO (FE10) see M25	Does not drop out	Error in non-volatile memory	•EEPROM error •Micro-processor error •Logic board error	→ → Replace FPS →
Treiber Kurzschluß (FE11) (Driver shorted) see M25	Drops out	Error in control of the main contactor	•Main contactor coil error •Short-circuit, main contactor driver •Wiring error •Logic board error	→ Check/replace → Replace FPS → Check → Replace FPS
Logikkarte defekt#1 (FE11) (Logic failure) see M25	Drops out or stays open on switching on	Error in control of the main contactor	•Logic board faulty	→ Check/replace
Schütztreiber (FE11) Contactor driver) see M25	Drops out or stays open on switching on	Error in control of the main contactor	•Main contactor coil error •Driver open •Logic board error	→ Check/replace → Replace FPS → Replace FPS
Mikro ST 6215 KO (FE11) see M26	Drops out or stays open on switching on	Micro-processor faulty	•Logic board error	→ Replace FPS
Kein Feldstrom (FE12) (No field current) see M26	Drops out or stays open on switching on	Field current lower than required	•Field not connected •Logic board error •Ribbon cable from logic board to travel amplifier faulty •Travel amplifier error	→ Check motor and wiring → Replace → Replace FPS → Replace FPS

Remark: For a detailed description, see sheet nos. M24-M32! Some of the errors are also stored in the error memory of the LAS-module (see sheet no. V27)!

Copyright protected. No part of this manual may be reproduced in any form. Copyright reserved.

https://truckmanualshub.com/

WinPulsE

Table of error codes

Message/error code	Main contactor	Description	Possible cause	Possible action
Hoher Feldstrom (FE13) (High field current) see M26	Drops out or stays open on switching on	Current flows through the field, although not driven	•Logic board error •Ribbon cable from logic board to travel amplifier faulty •Test shunt error	Replace FPS
Pumpe I = 0 immer (FE14) (Pump I = 0 ever) see M26	Does not drop out	No current flow, although the pump motor is driven	•Hydraulics amplifier error •Logic board error •Pump motor error	Replace FPS
Pumpe stby I hoch (FE14) (Pump stby I high) see M26	Drops out or stays open on switching on	Current flow in pump motor, although not driven	•Logic board error •Hydraulics amplifier error	Replace FPS
Ladung Kondensatoren (FE15) (Capacitor charge) see M26	Drops out or stays open on switching on	Capacitors do not charge	•Motors faulty •Hydraulics/travel amplifiers faulty	Check/replace Replace FPS
VMN nicht OK (FE16) (VMN not OK) see M28	Drops out or stays open on switching on	Voltage at the drive motor different from the applied voltage	•MOSFET short-circuit •Drive motor faulty •Logic board error	Replace FPS Check/replace Replace FPS
V Feld nicht OK (FE17) (V Field not OK) see M29	Drops out or stays open on switching on	The field voltage is not half the battery voltage	•Drive motor error •MOSFETs error •Logic board error	Check/replace Replace FPS Replace FPS
Stby I hoch (FE18) (Stby I high) see M29	Drops out or stays open on switching on	Current flow in drive motor armature, although not driven	•Travel amplifier error •Logic board error	Replace FPS
I=0immer (FE18) (I=0ever) see M29	Drops out or stays open on switching on	No current flow, although the drive motor is driven	•Travel amplifier error •Logic board error •Drive motor error	Replace FPS Replace FPS Check/replace
Hauptschütz geschlossen (FE19) (Contactor closed) see M30	Drops out or stays open on switching on	Discharge circuit of the capacitors faulty	•Main contactor contacts welded •Logic board error	Check/replace Replace FPS
Spulenkurzschluß (FE19) (Coil shorted) see M30	Drops out or stays open on switching on	Main contactor short-circuit	•Main contactor short-circuit •Main contactor driver •Logic board error	Check/replace Replace FPS Replace FPS

Remark: For a detailed description, see sheet nos. M24-M32! Some of the errors are also stored in the error memory of the LAS-module (see sheet no. V27)!

Copyright protected. No part of this manual may be reproduced in any form. Copyright reserved.

https://truckmanualshub.com/

WinPulsE

Table of error codes

Message/error code	Main contactor	Description	Possible cause	Possible action
Fahrmotortemperatur (FE20) (Traction Motor Temp) see M30	Does not drop out	Drive motor excess temperature, output is reduced	•Temperature >140°C •Temperature switch faulty •Wire breakage •Logic board error	Replace FPS
Kohlebürsten Fahrmotor (FE21) (Traction brushes) see M30	Does not drop out	Carbon brush wear in drive motor, display only	•Carbon brushes worn •Wiring	Replace Check
Übertemperatur (FE22) (Th.Protection) see M31	Does not drop out	Excess/under temperature at travel amplifier, output is reduced	•Temperature > 77°C •Temperature < -10°C •Logic board error •Temperature sensor faulty	Replace FPS
Pumpenmotortemperatur (FE30) (Pump Motor Temp) see M31	Does not drop out	Excess temperature at pump motor, pump switches off after 15 seconds	•Temperature >160°C •Temperature switch faulty •Wire breakage •Logic board error	Replace FPS
Kohlebürsten Pumpenmotor (FE31) (Pump brushes) see M31	Does not drop out	Carbon brush wear in pump motor, display only	•Carbon brushes worn •Wiring	Replace Check
Pump Temperatur (FE32) (Pump Temperature) see M31	Does not drop out	Excess/under temperature at hydraulics amplifier, output is reduced	•Temperature > 77°C •Temperature < -10°C •Logic board error •Temperature sensor faulty	Replace FPS
SOK k.o. (FE42) (State output ko) see M32	Drops out or stays open on switching on	Short-circuit at status output	•LAS-module error •Logic board error	Replace Replace FPS
Batterie k.o. (FE43) (Battery out of range) see M32	Does not drop out	Battery voltage < 30V	•Battery voltage too low •Logic board error	Charge battery Replace FPS

Remark: For a detailed description, see M24-32! Some of the errors are also stored in the error memory of the LAS-module (see sheet no. V27)!

Copyright protected. No part of this manual may be reproduced in any form. Copyright reserved.

https://truckmanualshub.com/

WinPulsE

Changing the hour counter
(Set Hour Counter)

The operating hours that are shown on the display can be modified here. However, the "internal operating hours" of the FPS cannot be changed!

- In the menu bar, click on "Function" and then "Set Hour Counter" (1).
- The -Set Hour Counter- window opens (2).
- The current operating hour is shown on the input window (3).
- The operating hours can be changed with the selection fields (4).

OR

- Double click with the mouse in the input window (3). The background to the displayed value turns blue and the required number of hours can be entered on the keyboard.
- Use the Acquire button (5) to reset the original value again.

Remark: A Save operation (6) cannot be carried out prior to this.

- The value that has been entered can be stored in the FPS with Save (6). The newly set value can be seen on the display immediately.
- The Close button (7) closes the active window.

Remark: No "Transmit to EEPROM" is necessary, since the data is changed directly in the FPS.

Fig. 1 1/0149

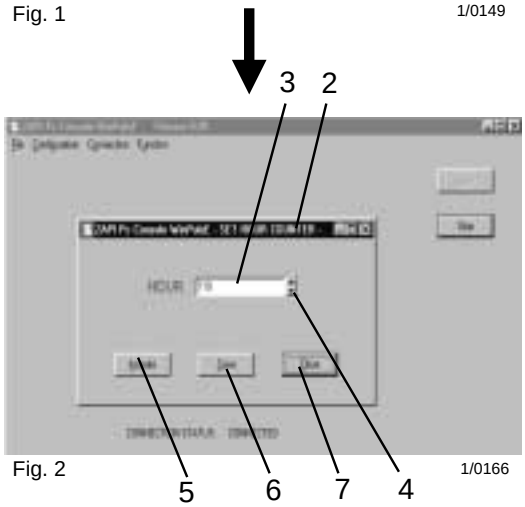

Fig. 2 1/0166

Copyright protected. No part of this manual may be reproduced in any form. Copyright reserved.

https://truckmanualshub.com/

WinPulsE

Other functions

Closing the program (Exit)

- In the menu bar, click on "File" and then "Exit" (1).
- The program is closed.

OR

- Use the X button (2) in the top right-hand corner of the WinPulsE window.

Fig. 1 1/0153

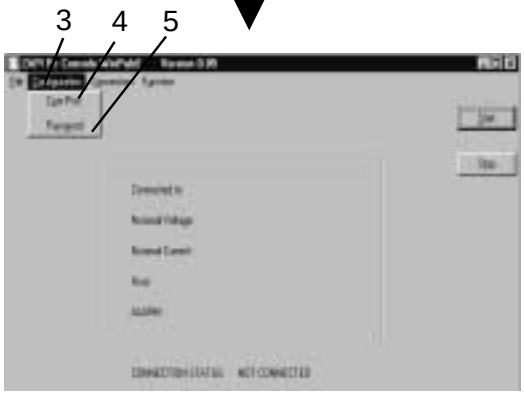

Fig. 2 1/0167

Configuring the software (Configuration)

- In the menu bar, click on "Configuration" (3).
- The computer interface via which the software communicates with the FPS can be set with "Com Port" (4). The standard setting is Comport 1.
- "Password" is not relevant for service work

Copyright protected. No part of this manual may be reproduced in any form. Copyright reserved.

https://truckmanualshub.com/

WinPulsE

Other functions

Keyboard commands

To enter the menu bar (1) you must press the keys Shift + F10 or ALT . The background to the first menu point (File) turns blue.

Use the ← and → keys to move between the individual points in the main menu (File, Configuration, etc.).

Use the ↓ key to open the submenu you require. The ↑ and ↓ keys can now be used to select the required function.

The function is started with the ENTER ↵ key.

To change over between Parameter Change and Set Configuration (2):

Press the ⇤⇥ key, until "Parameter Change" is active (Parameter Change). Then use the ← and → keys to switch over between the individual functions.

To enter the selection window (3), the ⇤⇥ key must be pressed until the background to the first parameter (4) turns blue.
Then press the ↓ and ↑ keys until the required parameter is shown in the selection window (5). The parameter can be set with the + and - keys.

The ⇤⇥ key can be used to access the function buttons like Transmit, Receive (6) etc.

The ENTER ↵ key is used to execute the required function.

Fig. 1 1/0146

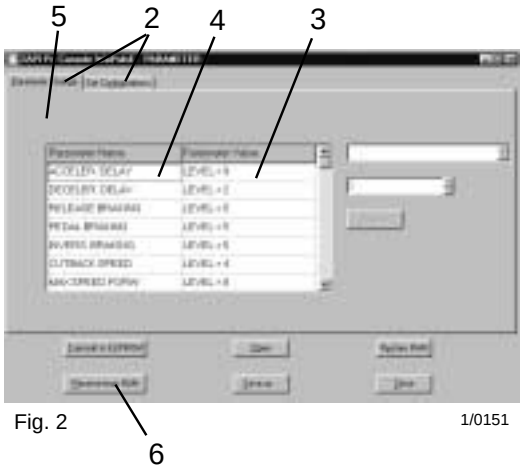

Fig. 2 1/0151

Copyright protected. No part of this manual may be reproduced in any form. Copyright reserved.