OPERATOR'S MANUAL

https://truckmanualshub.com/

Quick Table of Contents

•Introduction 1
•Cab And Frame Access 5
•Getting To Your Engine..... 9
•Controls And Displays 16
•Seat And Restraint Systems..... 63
•Driver's Checklists..... 76
•Starting And Operating The Vehicle..... 80
•Maintenance and Service..... 112
•Vehicle Identification 184
•Consumer Information 185
•Subject Index 187

California Proposition 65 Warning

- Diesel engine exhaust and some of its constituents are known to the State of California to cause cancer, birth defects, and other reproductive harm.
- Other chemicals in this vehicle are also known to the State of California to cause cancer, birth defects or other reproductive harm.
- Battery posts, terminals, and related accessories contain lead and lead compounds, chemicals known to the State of California to cause cancer and reproductive harm. Wash hands after handling.

https://truckmanualshub.com/

PART 1: INTRODUCTION

This manual contains useful information for the safe and efficient operation of your Peterbilt vehicle. It also provides information on maintaining your vehicle in the best condition, with an outline for performing safety checks and basic preventive maintenance inspections.

We have tried to present the information you'll need to learn about your vehicle's functions, controls, and operation - and to present it as clearly as possible. We hope you'll find this manual easy to use.

Please remember, though -- this manual is not a training manual. It can't tell you everything you need to know about driving your Peterbilt vehicle. For that you need a good training program or truck driving school. If you have not been trained, get the proper training before you drive. Only qualified drivers should drive this vehicle.

There will be times when you need to take this manual out of your Peterbilt. When you do, please be sure to return it to the cab when you are finished using it. That way it will be there when you need it the next time or when you pass the vehicle on to the next user.

How to Find What You Want

There are several tools built into this manual to help you find what you need quickly and easily.

First is the **Quick Table of Contents**. Located at the front of the manual, this lists the main subjects covered and gives page numbers where you can find these subjects. Use the Quick Table of Contents to find information on a large subject like "Maintenance."

Cross-referenced citations also help you get the information you need. If some other part of the manual contains further information on the subject you are reading about, we'll indicate that in a cross-reference like this: (See PART 6: DRIVER'S CHECKLIST). You won't have to go searching for more information.

Finally you'll find a helpful **Subject Index**. It's in the back of the manual and alphabetically lists the subjects covered. So if you want information on brakes, for example, just look under Brake in the Subject Index. You'll find all the pages listed where brakes or braking are discussed.

A Special Word about Repairs

Your Peterbilt dealer's service center is the best place to have your vehicle repaired. You can find Peterbilt dealers all over the country with the equipment and trained personnel to get you back on the road quickly - and keep you there.

Your vehicle is a complex machine. Anyone attempting repairs on it needs good mechanical training and the proper tools. If you are sure you have these requirements, then you can probably perform some repairs yourself. However, all warranty repairs must be performed by an authorized Peterbilt service facility. If you aren't an experienced mechanic, or don't have the right equipment, please leave all repairs

https://truckmanualshub.com/

to an authorized service facility. They are the ones equipped to do the job safely and correctly.

WARNING! Attempting repair work without sufficient training, service manuals, and the proper tools can be dangerous. You could be injured or you could make your truck unsafe. Do only those tasks you are fully qualified to do.

Maintenance Manuals. If you do decide to do any complex repair work, you'll need the Peterbilt Maintenance manuals. Order them from your authorized dealer. Please provide your Chassis Serial Number when you order, to be sure you get the correct manuals for your vehicle. Allow about four weeks for delivery. There will be a charge for these manuals.

Final Chassis Bill of Material. A complete, nonillustrated computer printout listing of the parts used to custom-build your Peterbilt vehicle is available through the Peterbilt dealer from whom your purchased your vehicle.

WARNING! Modifying your vehicle can make it unsafe. Some modifications can affect your truck's electrical system, stability, or other important functions. Before modifying your vehicle, check with your dealer to make sure it can be done safely.

Additional Sources of Information

Operator's manuals are also supplied by the manufacturers of components such as the engine, seats, transmission, and radio in your Peterbilt. If you are missing any of these manuals, ask your Peterbilt dealer to supply them.

Your new Peterbilt's glove box also contains a copy of the **Truck Driver's Handbook**, published by the American Trucking Association. Refer to it for important information on driving your vehicle. Another place to learn more about trucking is a local truck driving school. Contact one near you to find out what kinds of instruction it offers.

Federal and state agencies also have information you can ask for. The Interstate Commerce Commission can give you information about regulations governing transportation across state lines. And various agencies in state governments are sources for regulations that differ from state to state.

Warnings

We've put a number of warning messages in this manual. They are there for your protection and information. Please read them and follow them. They can help you to avoid injury to yourself and your passengers as well as to prevent costly damage to your vehicle. We've

https://truckmanualshub.com/

used certain symbols and “signal words” to indicate what kind of message is going to follow. When you see these symbols & words, you know that you need to pay special attention. Please don’t ignore any of these signals.

WARNING!

When you see this symbol & word, the message that follows is especially vital. This signals something that can cause serious injury or death. This message will tell you what the hazard is, what can happen if you don’t heed the warning, and how to avoid it. For example:

WARNING! Attempting repair work without sufficient training, service manuals, and the proper tools can be dangerous. You could be injured or you could make your vehicle unsafe. Do only those tasks you are fully qualified to do.

CAUTION:

This symbol & word signals something that could damage your vehicle. And you might receive an injury, too. For example:

CAUTION: Continuing to operate a vehicle with insufficient oil pressure will cause serious engine damage.

NOTE:

Gives you information we feel you’d like to have. It could have to do with care of your vehicle or with driving more efficiently:

NOTE: A cold compressor can cause refrigerant to liquefy and warp the valve plates or cause a hydraulic lock. Warm the engine before starting the air conditioner.

Please take the time to read these messages when you see them. And remember:

WARNING! Something that could injure you seriously.

CAUTION: Something that could cause injury to you or your vehicle.

NOTE: Useful information.

https://truckmanualshub.com/

PART 1: INTRODUCTION

Vehicle Safety

Make sure your Peterbilt is in top working condition before heading out on the road—it is the *responsible* driver's duty to do so. Inspect the vehicle according to PART 6: DRIVER'S CHECKLIST.

WARNING! Do not drink and drive. Your reflexes, perceptions, and judgment can be affected by even a small amount of alcohol. You could have a serious—or even fatal accident—if you drive after drinking. Please do not drink and drive or ride with a driver who has been drinking.

WARNING! The use of alcohol, drugs, and certain medications will seriously impair perception, reactions, and driving ability. These circumstances can substantially increase the risk of an accident and personal injury.

Please remember, this manual is not a training manual. It cannot tell you everything you need to know about driving your Peterbilt vehicle. For that you need a good training program or truck driving school. If you have not been trained, get the proper training before you drive. Only qualified drivers should drive this vehicle.

Every new Peterbilt vehicle is designed to conform to all Federal Motor Vehicle Safety Standards applicable at the time of manufacture. However, even with these safety features, continued safe and reliable operation depends greatly upon regular vehicle maintenance. The vehicle must be operated within the range of its mechanical capabilities and the limits of its load ratings. (See the Tire and Rim Weight Ratings label on the driver's door edge.)

PART 2: GETTING INTO AND OUT OF THE CAB AND FRAME ACCESS

https://truckmanualshub.com/

Be careful whenever you get into or out of your vehicle's cab. Whether you have a COE or conventional cab, always maintain at least three points of contact with your hands on the grab handles and your feet on the steps.

WARNING! Jumping out of the cab or getting into the cab without proper caution is dangerous. You could slip and fall, possibly suffering a serious injury. Keep steps clean. Clean any fuel, oil, or grease off of the steps before entering the cab. Use the steps and grab handles provided, and always keep at least three points of contact between your hands and feet and the truck. Look where you are going.

COE: The pictures below show the best way to enter and exit a COE cab.

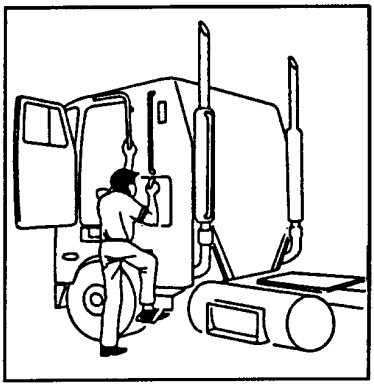

Three points of contact as you begin

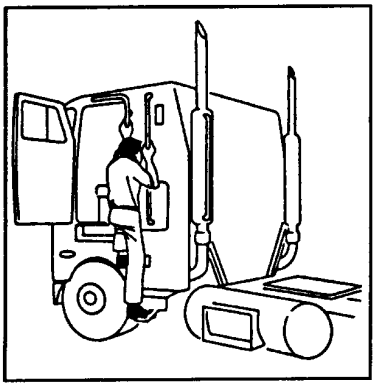

Three points of contact as you climb up or down

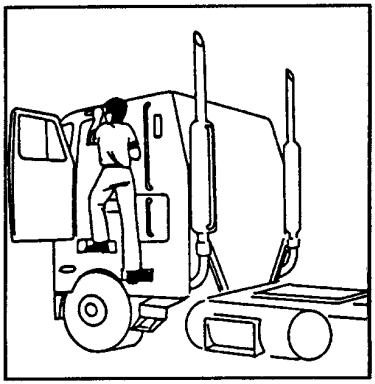

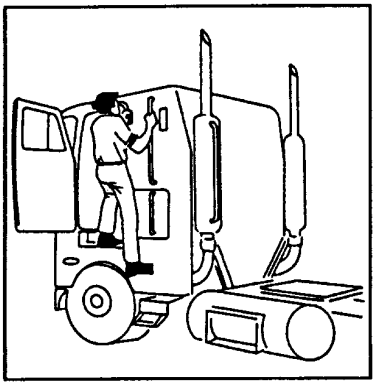

Three points of contact as you step in or out

02957

PART 2: GETTING INTO AND OUT OF THE CAB AND FRAME ACCESS

https://truckmanualshub.com/

CONVENTIONAL: The picture below shows the best way to enter and exit a Conventional Cab.

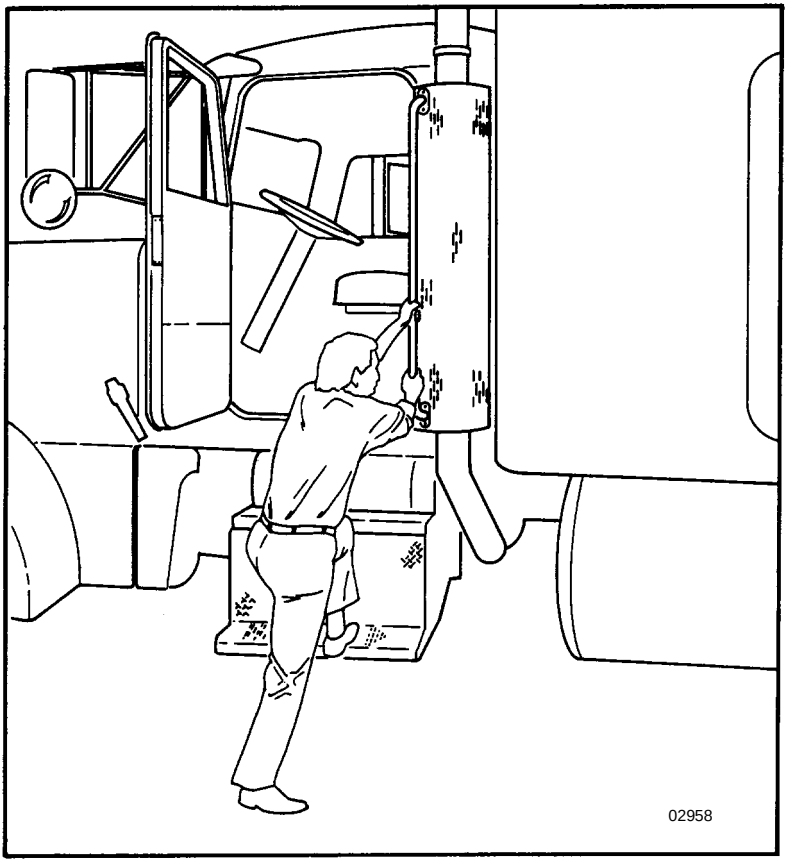

Door Lock and Keys

Doors can be locked from the inside by using the lock button. Close the door then push the button down to lock. Doors automatically unlock when you open them from inside, and can be locked from the outside with the key only.

WARNING! To lessen the chance and/or severity of personal injury in case of an accident, always lock the doors while driving. Along with using the lap/shoulder belts properly, locking the doors helps prevent occupants from being thrown from the vehicle.

To lock or unlock the doors from outside the cab, insert the key in the lock.Turn the key toward the rear to lock; forward to unlock.

https://truckmanualshub.com/

Climbing Onto the Deck Plate

When you are climbing onto and off the deck plate, maintain at least three points of contact with your hands on the grab handles and your feet on the steps.

WARNING!

- ***You can be hurt if you aren't careful climbing onto and off the deck plate. You can slip and fall, especially if the surfaces are wet or icy, or if you step in oil, fuel, or grease. Keep steps clean. Always maintain at least three points of contact between your hands and feet and the steps and deck plate.***
- ***Do not climb onto and off the deckplate–use steps and grabhandle provided. If there is no deck plate, or if proper steps and grab handles aren't provided, don't climb onto the area behind the cab. Peterbilt did not intend for the area to be a step if handrails or proper steps are not provided.***

The pictures below show you the right way to get on and off the area behind your cab.

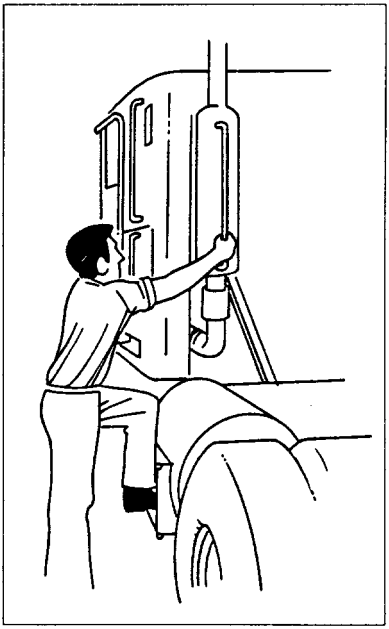

Hold handles as you step up.

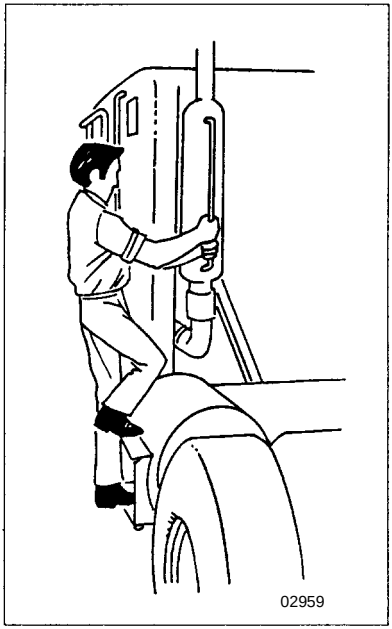

Three points of contact.

PART 2: GETTING INTO AND OUT OF THE CAB AND FRAME ACCESS

https://truckmanualshub.com/

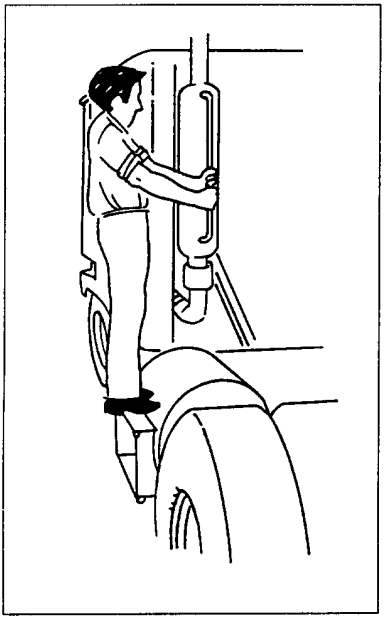

Three points of contact as you reach the deck area.

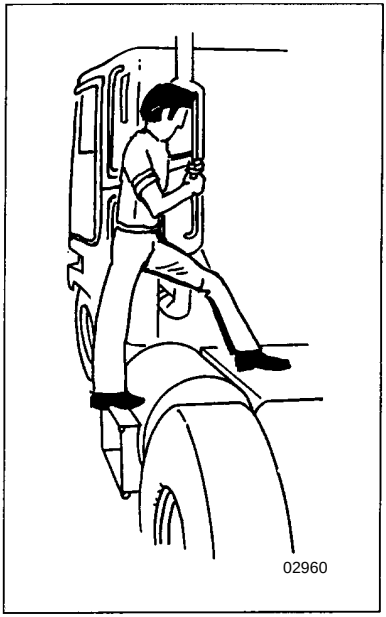

Three points of contact as you step to deckplate.

WARNING! Do not step on vehicle components without antiskid surfaces or use components not designed for entry-and-exit use. You could fall and injure yourself if you step on a slippery surface. For example:

- ***You could fall and injure yourself if you step onto a fuel tank surface. A fuel tank is not a step. The tank surface can get very slippery, and you might not be able to prevent a fall. Don't step onto the surface of a fuel tank. Use only the steps and handholds provided, not chain hooks, quarter fenders, etc.***
- ***Always reinstall steps before entering the cab or accessing the deck plate. Without steps, you could slip and fall, resulting in possible injury to yourself.***

NOTE: Any alteration (adding bulkheads, headache racks, tool boxes, etc.) behind the cab or sleeper that affects the utilization of grab handles, deck plates, or frame access steps installed by Peterbilt must comply with FMCSR 399.

https://truckmanualshub.com/

Hood Hold Downs (Conventional Cabs)

Your hood hold downs keep your hood from opening unexpectedly

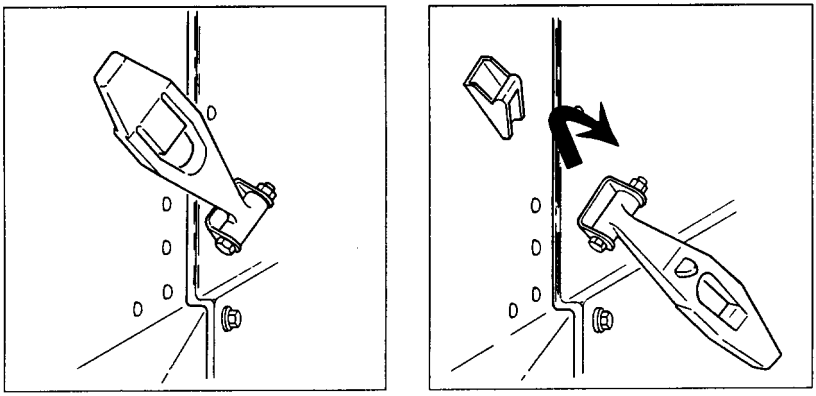

Latched Unlatched 02961

CAUTION: If you do not latch your hood securely, it could open during operation and cause vehicle damage. Be sure to latch the hood securely.

Hood Tilt (Conventional Cabs)

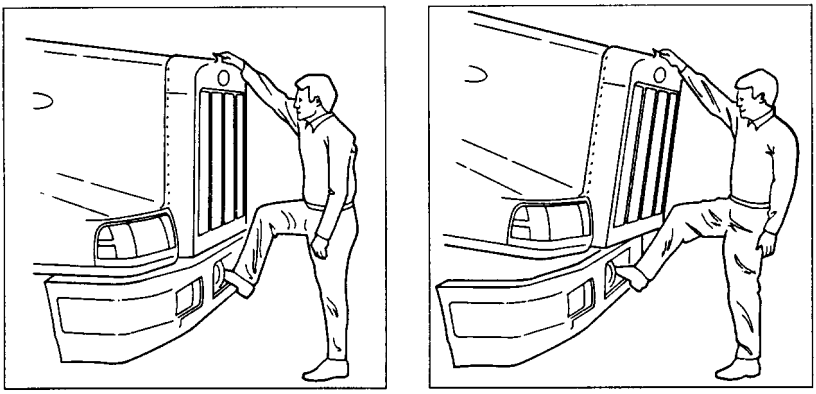

Proper Way To Tilt Hood 02962

To open your hood, unlock the hood hold downs by unlatching them. Put one hand on the top of the hood front, one foot on the bumper, and one foot on the ground. Tilt the hood forward.

WARNING! Before opening or closing the hood, be sure there are no people or objects in the way. A hood could hurt someone in the way of its descent.

https://truckmanualshub.com/

PART 3: GETTING TO YOUR ENGINE

Safety Cable

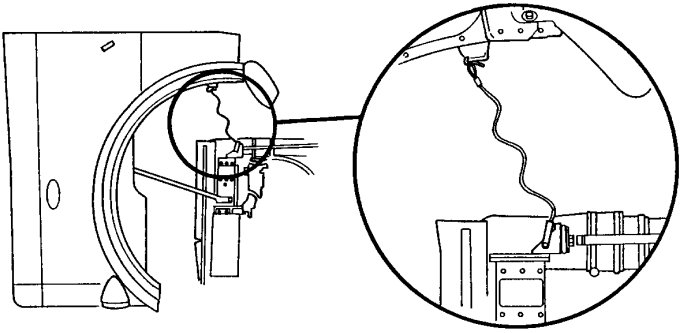

Hooked Cable

WARNING! If the hood falls, anyone under it could be injured. Always attach the safety cable to keep a hood open any time anyone gets under a hood for any reason.

To attach the safety cable: The cable is on the driver's side of the radiator. Attach it to the hook on the hood.

COE Cab Tilt System

If you have a COE type of vehicle, your cab tilts forward for maintenance on the engine and other components. An independent hydraulic system raises and lowers the cab. And a positive dual locking device increases safety and reduces the danger of mishaps while you are driving.

WARNING! Getting any part of your body under an unsecured cab could cause a serious or fatal accident. The cab could fall and crush you. Always make sure the mechanical lock is fully engaged before getting under the cab, or before letting anyone else get under it. See below for instructions on using the mechanical lock.

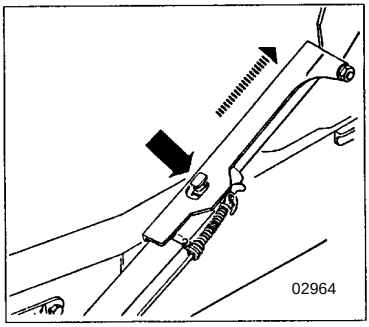

Mechanical Lock

https://truckmanualshub.com/

CAUTION: Raising the cab with heavy objects in the cab, sleeper, or luggage compartment can cause serious damage to the cab tilting mechanism and cab. Before tilting the cab, remove heavy items such as tire chains and tools. Remove or stow securely any loose items. And shut the doors tightly.

Cab tilting instructions are labeled and installed on the base of the passenger seat in your cab.

WARNING! You can be seriously injured by the cab if you do not follow safety precautions. Whenever you raise or lower the cab, or when you work under the cab, please remember the following safety rules:

- ***Be sure no one is under the front of the cab. Whether you are raising or lowering the cab, KEEP CLEAR.***
- ***Never work under a raised cab unless it is properly supported. This means use an overhead hoist of sufficient capacity to support the cab safely. Never prop the cab up instead of using a hoist. The prop could fail and let the cab fall on you or anyone else working under the cab.***
- ***Always be sure the safety latch is engaged when you or anyone else works under the cab.***
- ***Perform work only when the cab is in the mechanically locked position or in the full tilt position.***
- ***When your cab's hydraulic system needs service or repair:***
  - ***Have maintenance and repair done only by someone qualified in hydraulic systems.***
  - ***Be sure no one tries to bleed the system with the cab raised. This will defeat the safety system. The cab can fall and crush anyone under it.***
  - ***Do not tamper with any part of the cab tilt cylinders, including removing the velocity fuses. To do so will defeat their purpose. The cab could fall and crush anyone under it. If you have any need for repair involving the velocity fuses, have a qualified truck mechanic do the work.***

NOTE: In case of oil loss in the system or a lock-up in the tilt cylinders, refer to the maintenance manual for repair instructions.

https://truckmanualshub.com/

PART 3: GETTING TO YOUR ENGINE

To Raise the Cab:

1. Park the vehicle on a level surface to ensure proper hook and latch alignment.
2. Apply the parking brake.
3. Make sure the shift lever is in Neutral. This will prevent the shift lever from getting caught on the cab during tilt operation.
4. Secure or remove all loose items in the cab and luggage compartments. Close all doors.
5. Check the clearance above and ahead of the cab. Be sure there will be enough room to clear roof antennae, roof fairings, and side extenders when you tilt the cab. Check for obstructions overhead, such as branches, power lines, lights, etc. Check also for obstructions in front, such as walls, work benches, other vehicles, etc.
6. Place the control valve handle in the Tilt (Raise) position.

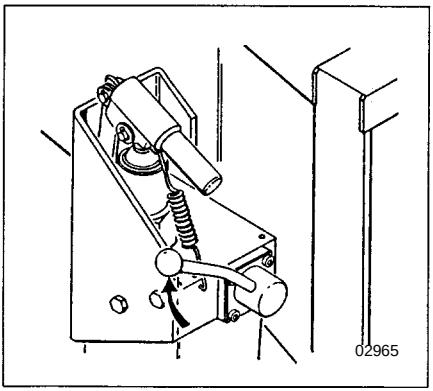

Handle in Tilt Position

7. Pump the cab up until the mechanical lock engages. Now put the control valve handle in the center position.

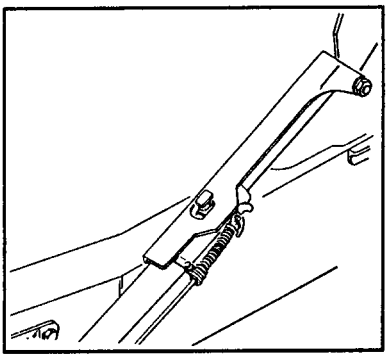

Mechanical lock engaged

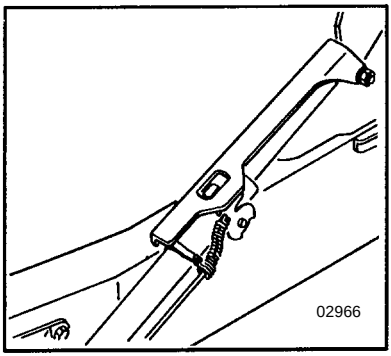

Mechanical lock disengaged

https://truckmanualshub.com/

When the cab is raised to the point where the weight of the cab is greater in front of its hinges than to the rear, gravity will make it fall forward. It will fall at a controlled rate.

8. If you want the cab in the full forward position, pull the cable to disengage the mechanical lock. You may have to free the lock by raising or lowering the cab to relieve pressure on the locking mechanism.

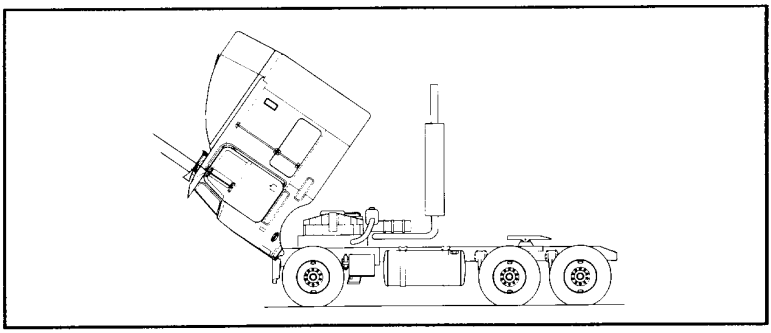

Cab locked at 55º

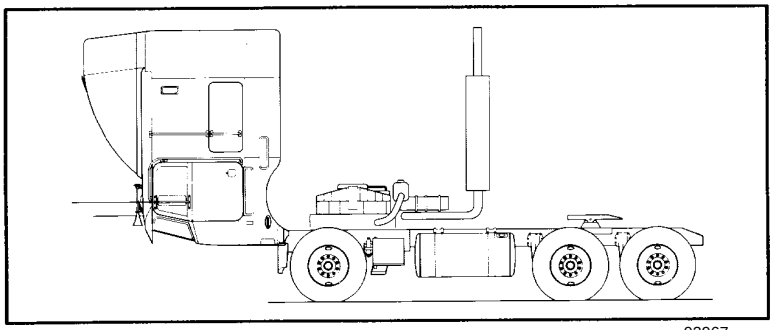

Cab at full tilt position

02967

WARNING! When the cab is tilted fully (90°), the roof-mounted antenna mast could injure someone. Remove or flag the mast before tilting the cab all the way forward.

CAUTION: When tilting the cab to the full tilt, or vice versa, hold the safety lock bar up to prevent it from engaging at the locked position. If it does lock, your cab could be severely damaged.

https://truckmanualshub.com/

PART 3: GETTING TO YOUR ENGINE

To Lower the Cab

1. Place the control valve handle in the Return (Down) position.

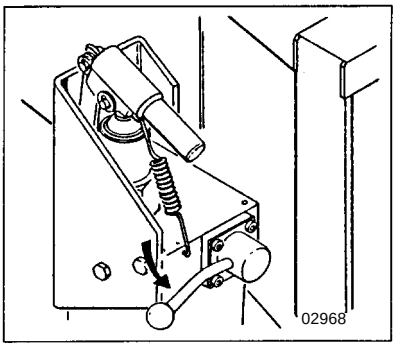

Handle in Lower position

2. Release the mechanical lock. Hold the safety lock bar up.
3. Pump until the cab starts to descend. The valve system will control the speed in either direction automatically.

CAUTION: Do not try to pump the cab down or hold it down with hydraulic force. If you do, cab damage will occur.

4. Leave the handle in the down position for at least 20 seconds after the cab touches down. This allows time for the full spring force to develop in the cab latch. Inspect the hooks to be sure they are closed. If they are not properly engaged, raise the cab slightly and guide the latch, if necessary, while lowering the cab.

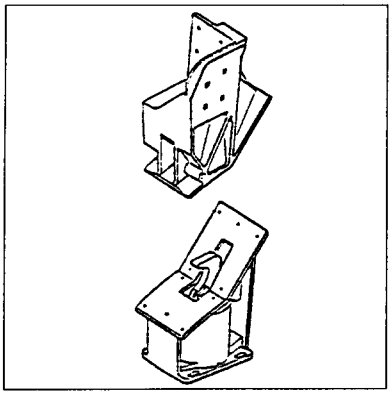

Cab tilt not locked

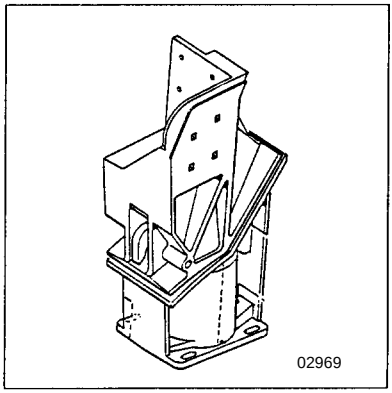

Cab tilt locked

https://truckmanualshub.com/

WARNING! Placing any part of your body between the cab and the frame could result in serious injury. Keep hands and feet out from under the cab if it must be raised to re-engage the cab latches. Guide the cab from the outer surfaces only.

5. Return the control valve handle to the Lock (Center) position for normal operation.

CAUTION:

- ***Do not continue to operate the pump after the cab is in the full Down position. Additional pumping could cause structural damage to the cab.***
- ***Driving with the cab tilt lock unsecured can damage your vehicle. Check daily to be sure the lock is closed securely.***

NOTE: In case of oil loss in the system or a lock-up in the tilt cylinders, refer to the maintenance manual for repair instructions.

https://truckmanualshub.com/

PART 4: CONTROLS AND DISPLAYS

Your Instrument Panel

This part explains the location of the various features on your vehicle and describes their function. For information on using these features in driving, see the paragraphs below. Please remember that each Peterbilt is custom-made. Your instrument panel may not look exactly like the one in the pictures below. We have tried to describe all the most common features and controls available. You can pick out the parts that apply to you and read them to be fully informed on how your particular vehicle operates.

Typical Conventional Cab Instruments and Controls

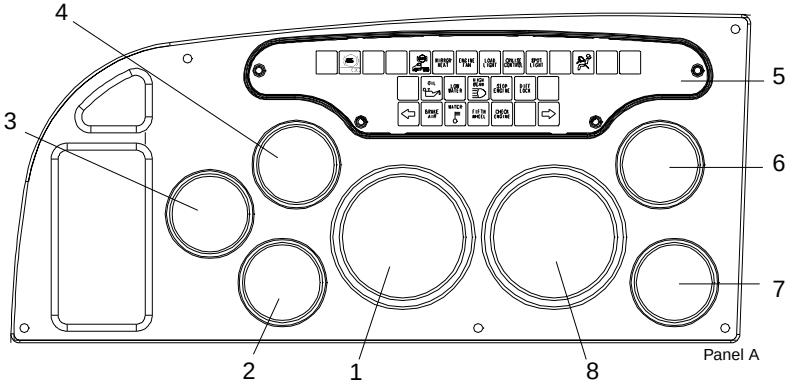

Panel A

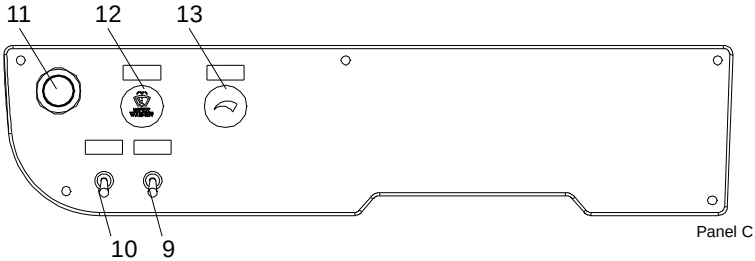

Panel C

LEFT SIDE

1. Tachometer
2. Oil Pressure
3. Clock
4. Oil Temperature
5. Warning Lamp Cluster
6. Water Temperature
7. Dual Air Pressure
8. Speedometer
9. Clearance Lamps
10. Headlamps
11. Ignition Key Switch
12. Windshield Wiper/Washer
13. Panel Light Dimmer

https://truckmanualshub.com/

PART 4: CONTROLS AND DISPLAYS

Conventional

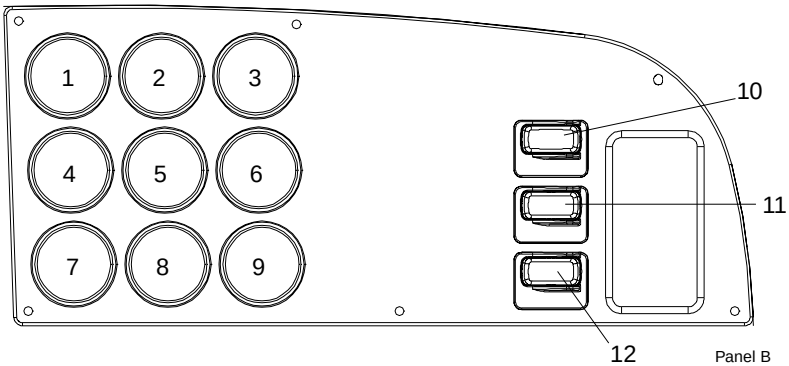

Panel B

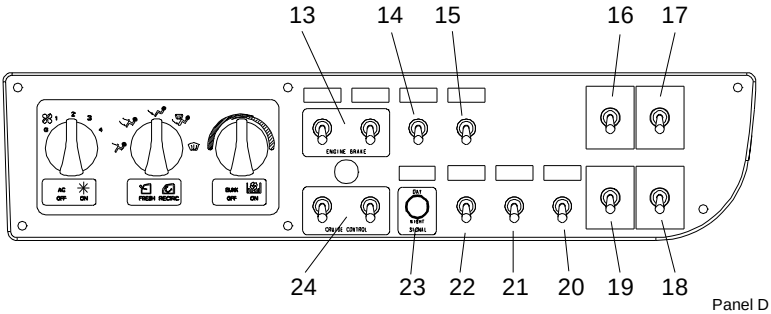

Panel D

RIGHT SIDE

1. Fuel
2. Air Cleaner Restriction
3. Transmission Oil Temperature
4. Voltmeter
5. Manifold Pressure
6. Front Driver Oil Temperature
7. Air Application
8. Pyrometer
9. Rear Driver Oil temperature
10. Air Suspension
11. Fifth Wheel
12. Interaxle Differential Lock
13. Engine Brake
14. Engine Fan
15. Fuel Tank Selector
16. LH Air Window
17. RH Air Window
18. Sleeper Door Lock
19. Cab Door Lock
20. RH Mirror
21. Mirror Heat
22. LH Mirror
23. Day/Night Signal
24. Cruise Control

https://truckmanualshub.com/

PART 4: CONTROLS AND DISPLAYS

Typical COE Instruments and Controls

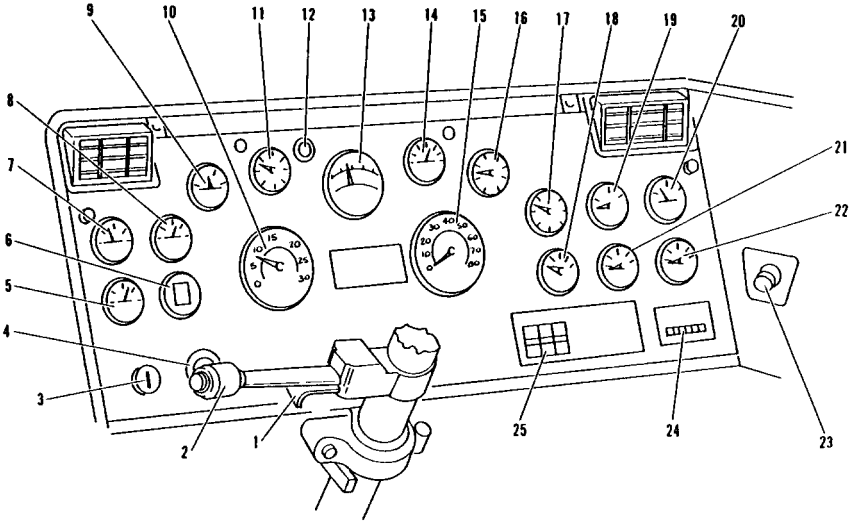

02973

LEFT SIDE

1. Hazard Flasher
2. Turn Signal
3. Ignition Switch
4. Start Button
5. Manifold Pressure
6. Air Cleaner Restriction Gauge
7. Ammeter
8. Voltmeter
9. Engine Oil Temperature
10. Tachometer
11. Oil Pressure
12. ABS Warning Lamp
13. Pyrometer
14. Water Temperature
15. Speedometer
16. Air Pressure
17. Air Pressure
18. Transmission Temperature
19. Fuel Gauge
20. Clock
21. Front Driver Temperature
22. Rear Driver Temperature
23. Lighter
24. Trip Odometer
25. Shift Pattern Decal (if used)

https://truckmanualshub.com/

PART 4: CONTROLS AND DISPLAYS

COE

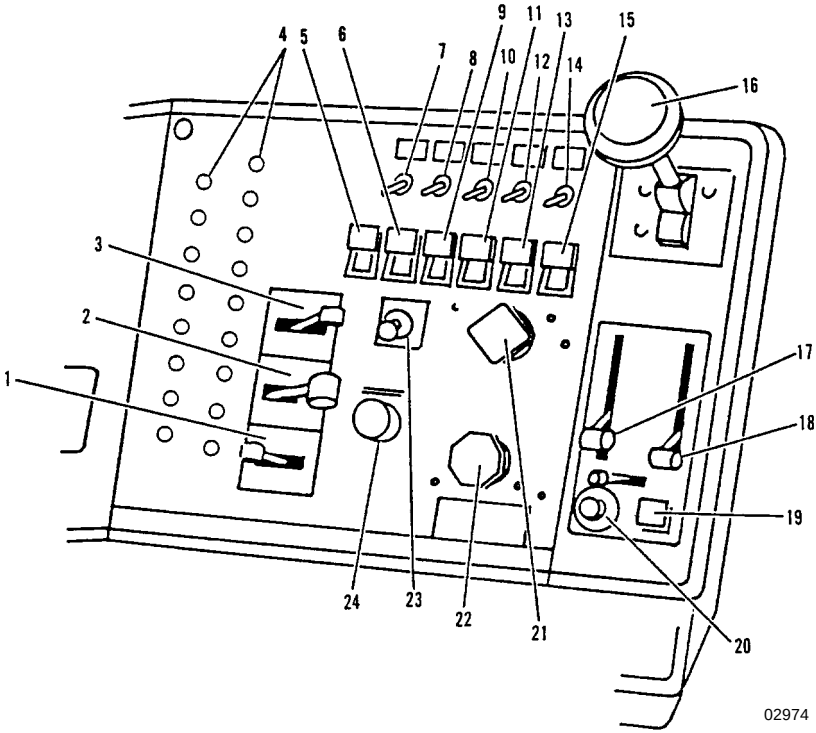

RIGHT SIDE

1. Air Suspension Switch
2. 5th Wheel Lock
3. Lockout Differential Switch
4. Reset Circuit Breakers
5. Retarder Switch
6. Loading Lamp
7. Fuel Tank Selector L/R
8. Light Toggle Switch
9. Spot Light
10. Engine Brake
11. Mirror Heat
12. Clearance Lamps
13. Engine Fan
14. Headlamps
15. Ether Switch
16. Trailer Brake Hand Valve
17. Cab Air Selector
18. Cab Heat Control
19. Cab Ventilation
20. Cab A/C Control
21. Parking Brake Valve
22. Trailer Air Supply
23. Right Hand Air Window
24. Windshield Washer / Wiper

https://truckmanualshub.com/

PART 4: CONTROLS AND DISPLAYS

Steering Column-Mounted Controls

Turn Signal and Indicator Lights

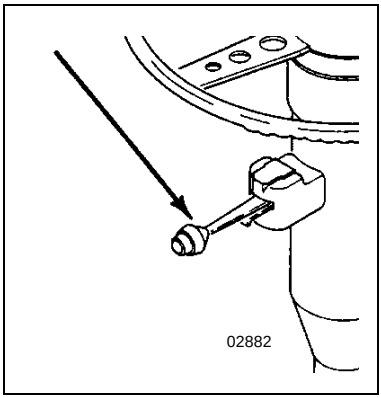

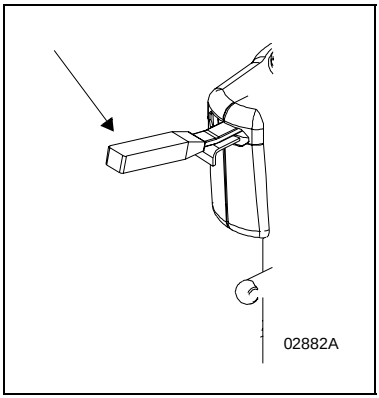

Model 379 vehicles built on or after 5/1/98 with SRS

Your turn signal lever is mounted on the left side of the steering column below the steering wheel. Green directional indicator lights appear on the instrument panel.

NOTE: The ignition key must be turned to ON for the signal/ switch to operate.

To operate the signal, move the lever in the direction of the turn.

WARNING! After you complete a turn, shut the system off by returning the lever to the "OFF" (center) position. The switch's lever action is NOT self-canceling. Failure to shut off a turn signal could confuse other drivers and result in an injury accident. An indicator light in the instrument panel will flash until the turn signal is turned off.

https://truckmanualshub.com/

Hazard Flasher

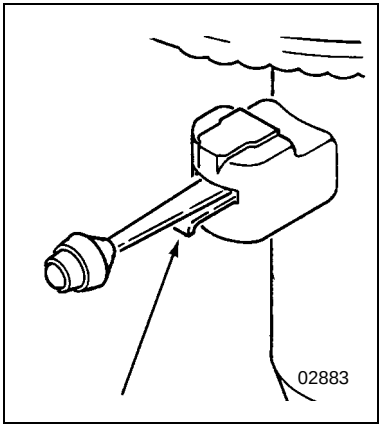

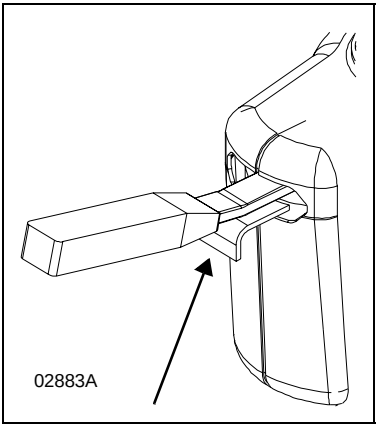

Model 379 vehicles built on or after 5/1/98 with SRS

The four-way Hazard Flasher switch is on the turn signal body, just below the turn signal lever. It will operate with the key switch in the on or off position. Use your hazard flasher whenever you are off the road or on the side of the road, or in a potentially hazardous situation. Pull it out to activate the system. All turn signals will flash at once. To turn it off, move the turn signal lever up or down. Of course, in normal stopping in traffic, such as at a stop light, you do not use your flashers.

WARNING! Use your Hazard Flasher Warning System any time you have to stop off the road or on the side of the road, day or night. A hard-to-see vehicle can result in an injury accident. Another vehicle could run into you if you do not set your flashers. Always move the vehicle a safe distance off the road when stalled or stopped for repairs. A disabled vehicle can be dangerous for you and others.

- ***The hot exhaust system could ignite dry grass, spilled fuel, or other substances. Do not park or operate your vehicle where the exhaust system could contact dry grass, brush, spilled fuel, or any other material that could cause a fire.***

Air Horn

Your Peterbilt has an air horn in addition to an electric horn. Control the air horn by pulling on the lanyard extending from the overhead header panel.

https://truckmanualshub.com/

High Beam Headlights

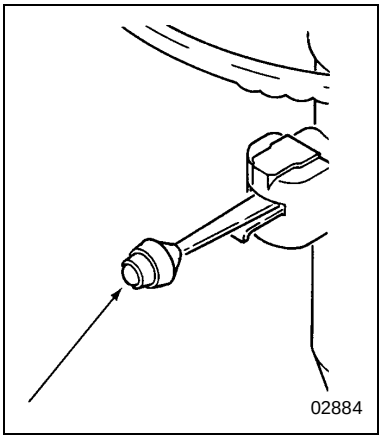

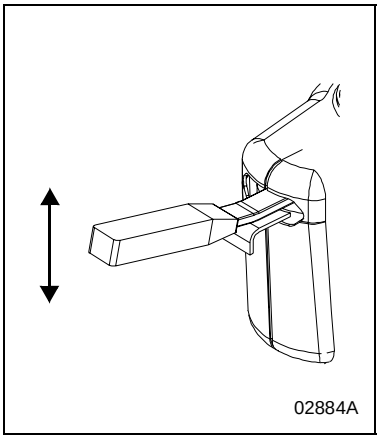

Model 379 vehicles built on or after 5/1/98 with SRS

All Peterbilt vehicles come equipped with a combination turn signal and high beam/low beam switch. To switch your headlights lower or higher

- For Model 379 vehicles built on or after 5/1/98 with SRS: Gently pull the turn signal lever up, towards the steering wheel, until you hear the switch “click” and the beam changes.
- For all other vehicles: Push and release the button on the end of the turn signal lever

Electric Horn

Your Peterbilt has an electric horn. To sound the horn, press on the button or bar in the center of the steering wheel.

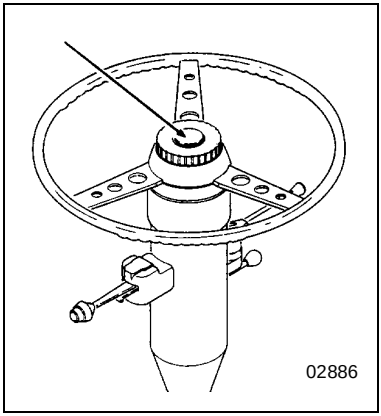

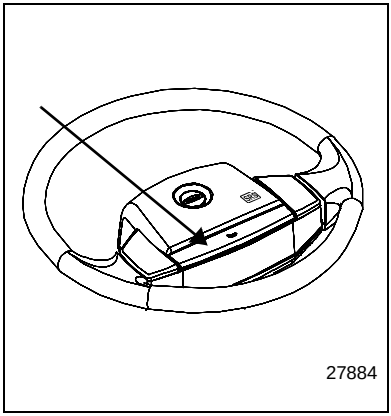

Model 379 vehicles built on or after 5/1/98 with SRS

https://truckmanualshub.com/

Trailer Brake Hand Valve

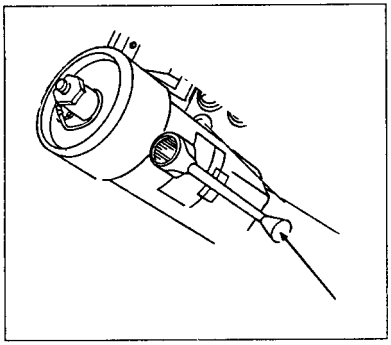

Conventional

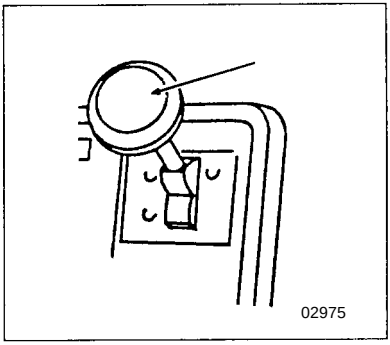

COE

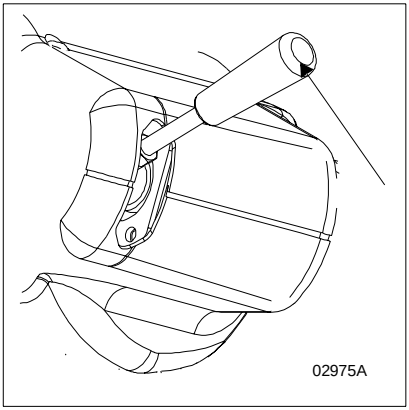

Model 379 vehicles built on or after 5/1/98 with SRS

This hand valve provides air pressure to apply the trailer brakes only. It operates independently of the foot treadle valve.

To operate the trailer brake hand valve: Pull down on the lever under the right side of the steering wheel or on the dash (COE models).

WARNING! Grabbing the trailer hand brake lever instead of the BrakeSaver lever could lead to an accident. If you have these levers, they may be close together on your steering wheel column. Be sure you get the one you want. The BrakeSaver lever is bent, while the trailer parking brake lever is straight (see page 36).

See "Brake Safety and Emergency" for more complete information on when and how to use your trailer brake. Or see the Index, under Brake."

NOTE: The trailer brake is not to be used as the main means of braking. To use this brake frequently instead of using the foot brake will wear out the trailer brake sooner.

https://truckmanualshub.com/

PART 4: CONTROLS AND DISPLAYS

WARNING! It is dangerous to use air-applied trailer brakes for parking or holding a vehicle. Air system pressure can bleed down and release the brakes. You could have a vehicle roll-away resulting in an accident. You or others could be badly injured. Always apply the parking brakes for parking or holding your vehicle on grade.

Tilt- Telescoping Steering Column

The tilting feature of the steering wheel allows forward and rearward movement of the wheel. The telescoping feature allows you to move the wheel up and down.

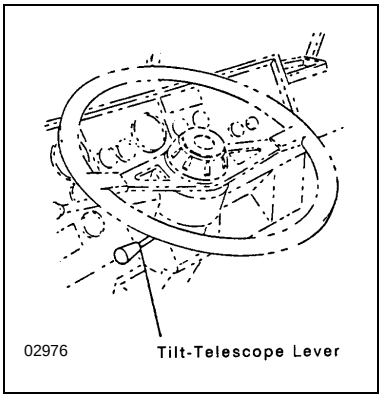

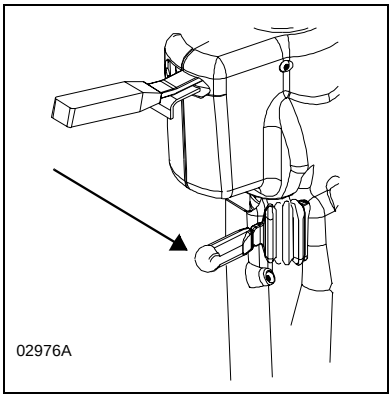

Model 379 vehicles built on or after 5/1/98 with SRS

WARNING! Adjusting the Tilt-Telescoping Steering Wheel while the vehicle is in motion could cause loss of control. You wouldn't be able to steer properly and could have an accident. Make all adjustments to the steering mechanism while the vehicle is stopped.

- Model 379 vehicles

  To tilt the wheel: Push the lever away from yourself. Move the steering wheel to the desired angle, then release the lever to lock.

  To raise or lower the wheel: Pull the lever towards yourself. Push or pull the wheel to the desired height, then release the lever to lock.

- All other models

  To tilt the wheel: Pull the lever towards yourself. Move the steering wheel to the desired angle, then release the lever to lock.

  To raise or lower the wheel: Push the lever away from yourself. Push or pull the wheel to the desired height, then release the lever to lock.

https://truckmanualshub.com/

Dash-Mounted Features

Keys and Locks

Conventional Models: The same key fits your ignition, doors, and sleeper luggage compartment.

COE Models: The same key operates the ignition and opens the doors and the glove box.

Frame-mounted tool box locks and locking fuel tank caps each have individual keys.

Ignition Switch

Your ignition switch has three (COE) or four (conventional) positions:

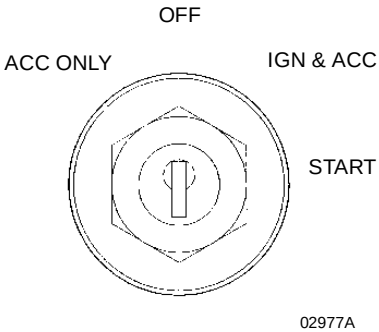

ACC (Accessory):	With your key in this position you can play the radio or use other accessories, but your engine won't start.
OFF:	In this position all systems are off, and you can remove your key.
IGN & ACC:	This position allows you to turn on the engine and all accessory power.
START:	Starter activation to start engine (conventional models only).

https://truckmanualshub.com/

PART 4: CONTROLS AND DISPLAYS

Starter Button

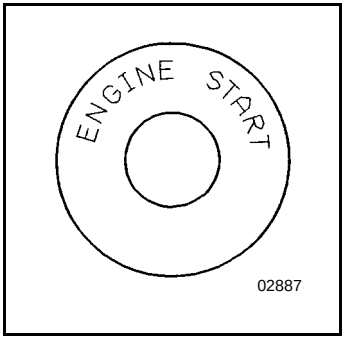

On COE models: with the key switch in the IGN & ACC position, push the starter button; this will engage the starter motor and crank the engine.

Manual Override for Engine Shutdown

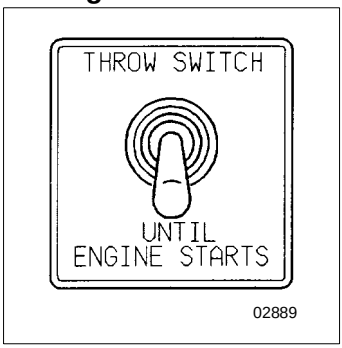

On vehicles with an engine shutdown, you will have to hold the manual throw switch in the UP position until normal engine pressures are reached. If you have one of these systems, a label on the control panel will say so.

For detailed starting procedures, see the Index, under Starting and Operating 80.

https://truckmanualshub.com/

Hand Throttle Control

WARNING! Do not use the hand throttle control as a cruise control. It could cause an accident and you could be seriously injured. In an emergency you might not be able to unset it in time to save yourself and your vehicle from an accident. Never try to control road speed with your hand throttle control. Always push in the hand throttle before driving the vehicle.

If you have a hand throttle, in conventional cabs it is usually located to the left of the driver's seat, mounted on the floor. In COEs it is under the lefthand dash. It can be especially helpful in cold weather to keep your engine running at above idle speed when you leave the vehicle briefly.

For more information on idling your engine safely, see the Index, under Engine.

Headlights

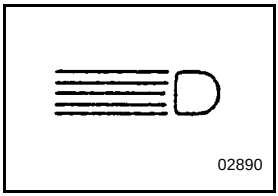

The headlights are controlled by the control panel switch showing this symbol. When the headlights are ON, the dash lights, side, and tail lamps are also on.

WARNING! Do not use daytime running lights (DRL) during periods of darkness or reduced visibility. Do not use DRL as a substitute for headlights or other lights during operations that require lighting of your vehicle. Doing so could lead to an injury accident

NOTE: On vehicles equipped with daytime running lights (DRL), the high-beam headlamps go on automatically at reduced brightness if the engine is running and the head-lamp switch is turned off. The daytime running lights are turned off automatically while the parking brake is engaged. If the headlamp switch is turned on, the DRL system is over-ridden & headlamps operate normally.

https://truckmanualshub.com/

PART 4: CONTROLS AND DISPLAYS

Panel Light Knob

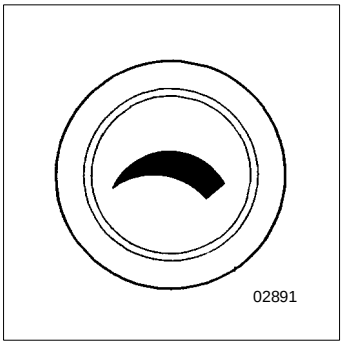

The Panel Light Knob lets you vary the brightness of your instrument panel lights.

To Operate Your Panel Light Knob:

1. Turn on either the headlights, clearance lights, or fog / driving lights.
2. To brighten the instrument panel lights, turn the knob clockwise (to the right).
3. To dim the instrument lights or to turn them off, turn the knob counterclockwise (to the left).

ID and Clearance Lights Switch

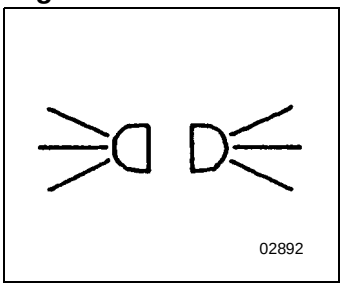

These are the amber lights on top of your cab, the lights on the front and sides of the trailer, and the red lights on the rear of a truck or trailer. They are controlled by the control panel switch labelled CL LPS.

https://truckmanualshub.com/

Fog Lights Switch

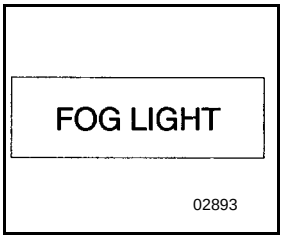

If your vehicle has fog lights, turn them ON or OFF with the control panel switch labelled FOG LIGHT.

NOTE: State requirements vary as to when high beams and fog lights can and cannot be used together. Further, some states allow only four lights to be used together; some allow more. Whether you have dual or composite lights will affect how many lights you can have on at one time. Always comply with the state requirements where you are driving.

Dome Light Switch

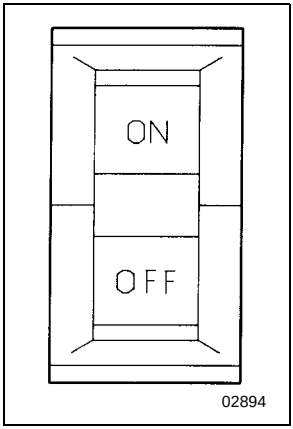

A three-position switch controls each dome light.

Position 1 (Center): Light is OFF.

Position 2 (Upward): Light will stay ON.

Position 3 (Downward): Light will turn ON when a door is opened and OFF when the door is closed.

https://truckmanualshub.com/

PART 4: CONTROLS AND DISPLAYS

Windshield Wipers and Washers

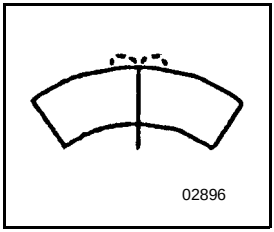

Wiper

To turn on the wipers rotate the knob to the right. As the knob is rotated, the speed of the wipers increases. To turn off the wipers, rotate the knob to the left.

Washer

To use the washer, push the knob showing the symbol above. With the electric wipers, the wipers will come on for a short time when the washer starts.

WARNING! Do not drive with worn or dirty wiper blades. They can reduce visibility, making driving hazardous. Clean blades regularly to remove road film and wax build-up. Use an alcohol-based cleaning solution and a lint-free cloth, and wipe along the blades.

CAUTION: Do not use antifreeze or engine coolant in the windshield washer reservoir—damage to seals and other components will result.

Intermittent Windshield Wiper Control

Two-speed intermittent windshield wipers are controlled by the control panel knob with the symbol shown above. To turn on the wipers, rotate the knob to the right.

As you turn the knob further to the right, intermittent delay decreases until the knob encounters the first position for continuous operation. Turn the knob further right to the next position for higher speed continuous operation. Turn off the wipers by rotating the knob to the left.

https://truckmanualshub.com/

Air Suspension Deflate Switch (Dump Valve)

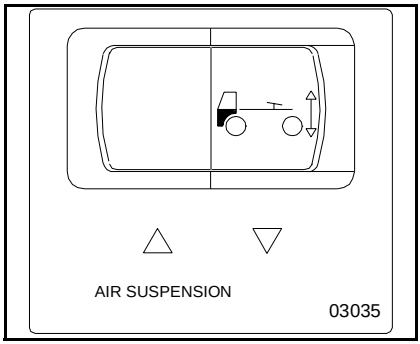

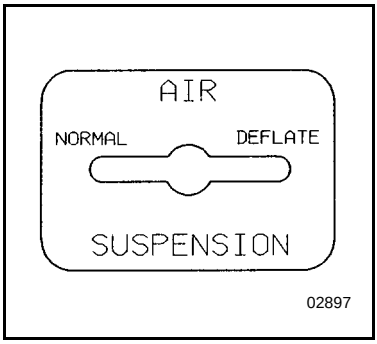

Your Peterbilt vehicle may have an air suspension deflation switch which allows the air in the suspension to be exhausted from a switch on the dash. The purpose of this feature is to allow you to lower your tractor to get under a trailer.

You may notice a guard over the switch. This prevents you from accidentally deflating the suspension.

WARNING! Operating the Air Suspension Deflate Switch (Dump Valve) while driving can lead to an accident. Sudden deflation while your vehicle is moving can affect handling and control. Use this switch only when your vehicle is not moving.

CAUTION: Operating a vehicle with air suspension bags either overinflated or underinflated may cause damage to driveline components. If a vehicle must be operated under such conditions, do not exceed 5 mph.

https://truckmanualshub.com/

PART 4: CONTROLS AND DISPLAYS

Engine Fan Switch

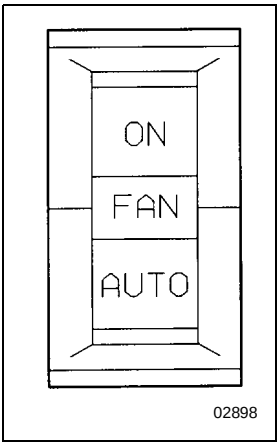

The engine fan switch allows you to control the engine fan manually or automatically. With the ignition key switch ON and the fan switch in the ON position, the engine fan will be on regardless of engine temperature. With the engine fan switch in the AUTOMATIC position, the engine fan will automatically turn on when the engine coolant reaches a temperature of about 200°F.

WARNING! Do not work on the fan with the engine running. Anyone near the engine fan when it turns on could be badly injured. If it is set at ON, it will turn on any time the ignition key switch is turned to the ON position. In AUTOMATIC, it could engage suddenly without warning. Before turning on the ignition or switching from AUTOMATIC to ON, be sure no one is near the fan.

CAUTION: The fan or equipment near it could be damaged if the fan turns on suddenly when you don't expect it. Keep all tools and equipment such as rags away from the fan, and take care no one turns on the ignition when someone is working near the fan.

CAUTION: Do not operate the engine fan in the manual (ON) position for extended periods of time. The fan hub was designed for intermittent operation. Sustained operation will shorten the fan hub's service life as well as reduce fuel economy.

https://truckmanualshub.com/

Cruise Control Switch

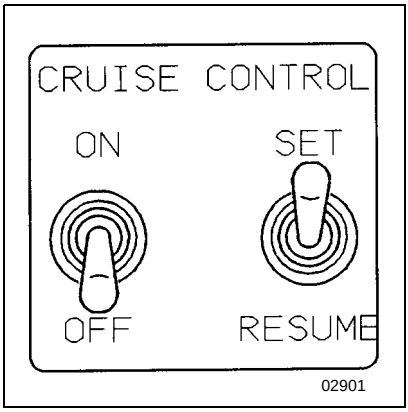

WARNING! Do not operate the cruise control when operating on road surfaces with poor traction (wet, icy, or snow covered roads) or in heavy traffic. Accelerations caused by the normal operation of the cruise control could cause you to lose control of the vehicle resulting in an injury accident.

NOTE: Cruise control functions and features may vary depending upon which engine you have. For specific explanation of your cruise control, see the cruise control or engine manual included with your vehicle.

The master switch turns the cruise control ON or OFF. The second switch allows you to SET the desired speed or RESUME the desired speed after the cruise control function has been interrupted.

In conventional models with Eaton transmissions, the cruise control switches may be located on the shift control knob (see illustration):

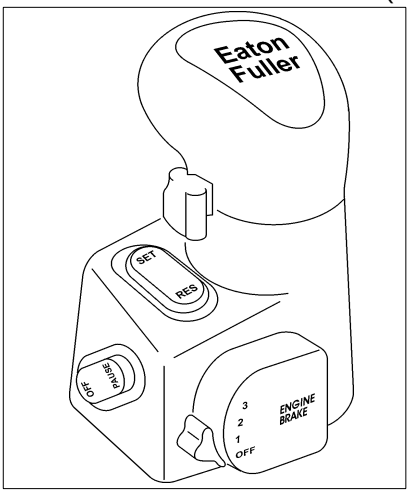

https://truckmanualshub.com/

PART 4: CONTROLS AND DISPLAYS

Power Mirror Switch

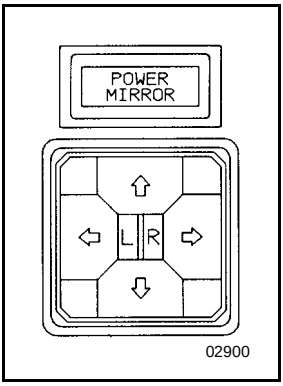

WARNING! Convex mirrors can distort images and make objects appear smaller and farther away than they really are. You could have an accident if you are too close to another vehicle or other object. Keep plenty of space between your vehicle and others when you turn or change lanes. Remember that other objects are closer than they may appear.

The power mirror control controls the adjustment of the right and left outside mirrors. To adjust: Push to R or L to select which mirror you want to adjust. Next push the arrow that points toward the direction you want to move the mirror.

Mirror Heat Switch

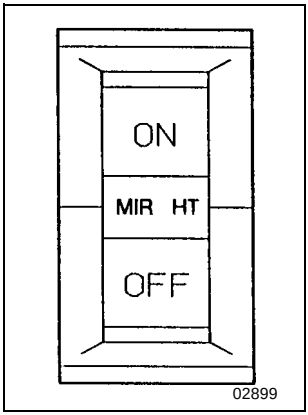

NOTE: The Power Mirror Switch does not control the adjustment of the convex mirrors.

Mirror heat is controlled by the control panel switch labelled MIR HT. If the vehicle is equipped with this switch, mirror heat can be switched on to help remove frost and ice from the mirror glass.

https://truckmanualshub.com/

Digital Message Center

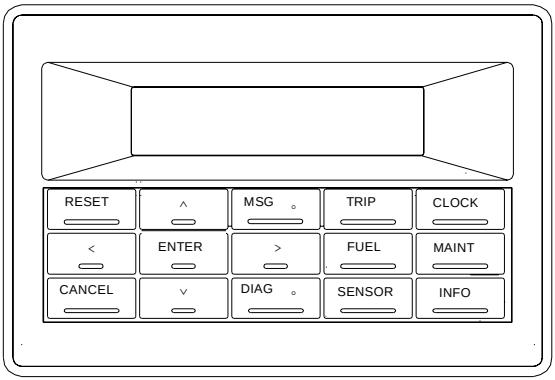

03038

The optional digital message center (DMC) is an onboard computer used to provide the following:

- trip information
- clock/calendar
- fuel economy
- sensor data
- fault codes
- maintenance information
- warning messages

The DMC is available on conventional models. The DMC vacuum-fluorescent display is capable of displaying 40 characters. Navigation through the information is done by means of an integral keypad. Refer to the DMC operator's manual that came with the vehicle for more information on using this component.

https://truckmanualshub.com/

Brakesaver

The Caterpillar BrakeSaver provides auxiliary braking to slow the vehicle and to control speed on long grades. Refer to the BrakeSaver Operation section of the Caterpillar manual for complete operating instructions.

Manual Control Lever

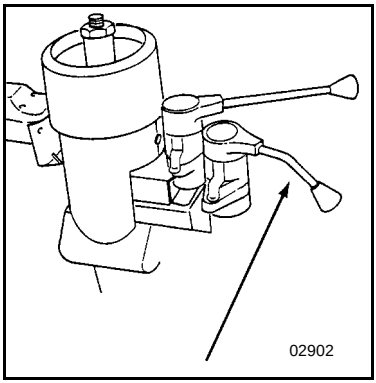

This hand-operated control lever provides modulated application of the BrakeSaver in the manual or ON mode. How much braking you get depends on how much you move the lever.

Manual and Automatic Control Switch

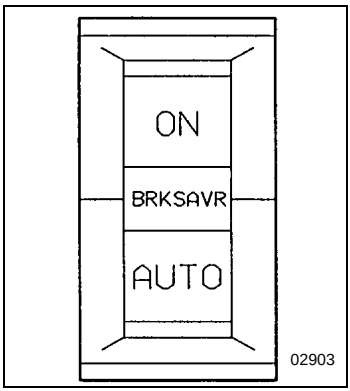

With the switch in the AUTOMATIC position, the BrakeSaver will be fully applied automatically when the operator has the vehicle in gear and takes his or her foot off the accelerator pedal.

With the switch in the ON position, the BrakeSaver will be applied constantly, regardless of whether the operator has the vehicle in gear or his or her foot off the accelerator.

A Control Air Pressure gauge and an Engine Oil Temperature gauge are provided with the BrakeSaver.

https://truckmanualshub.com/

Jacobs Engine Brake or Cummins “C” Brake Switch

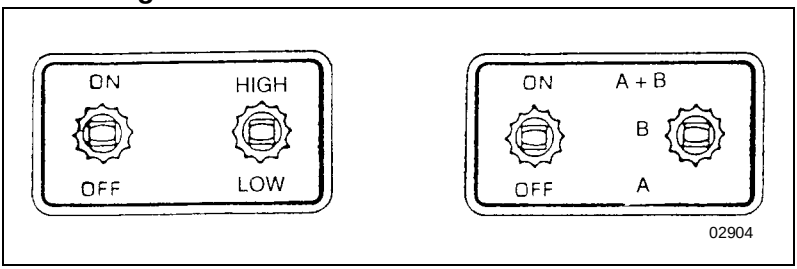

2-Mode and 3-Mode Systems

WARNING! Using the engine brake when operating on surfaces with poor traction (such as wet or icy, slippery roads or gravel) could cause loss of control.

The ON/OFF switch turns the system ON or OFF. The second switch performs the progressive braking function that controls the amount of retarding:

- If you have the three-mode system, you can select low (A), medium (B), or high (A + B) retarding.
- If you have the two-mode system, you can select HIGH or LOW.

In conventional models with Eaton transmissions, the engine brake switch may be located on the shift control knob (see illustration):

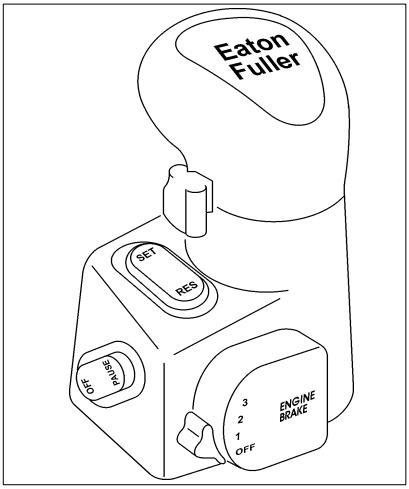

For more information on when and how to use the engine brake in your vehicle, see the engine brake manufacturer’s owner’s manual that is included with your vehicle.

https://truckmanualshub.com/

Interaxle Differential Lock Switch

WARNING! Placing the differential lock in the "LOCK" position while your wheels are spinning could cause loss of control or axle damage. You could be hurt. Switch to "LOCK" only when your wheels are not spinning.

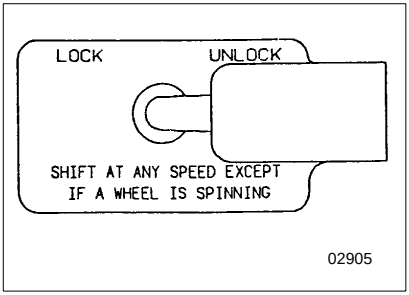

The interaxle differential allows differential action between the forward rear and the rear rear driving axles. The interaxle differential lock switch allows the operator to LOCK or UNLOCK the differential. The guard over this switch prevents you from accidentally activating the lock.

See "Interaxle Differential" on page 87 for more information on using your interaxle differential.

Two-Speed Rear Axle (Range) Switch

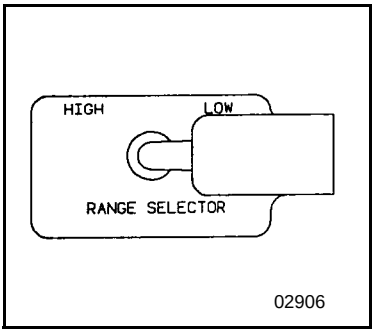

If your vehicle is equipped with a two-speed rear axle, you can select the axle range by the dash mounted switch shown above. The low range provides maximum torque for operating off-highway. The high range is a faster ratio for highway speeds.

For information on how to operate your two-speed rear axle properly and safely, see PART 7: STARTING & OPERATING THE VEHICLE or check the Index, under Two-Speed Rear Axle (Range) Switch 38.

https://truckmanualshub.com/

Fifth Wheel Lock (Slider Adjustment) Switch

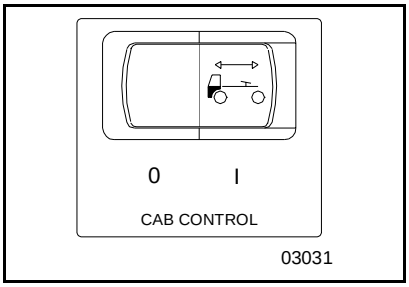

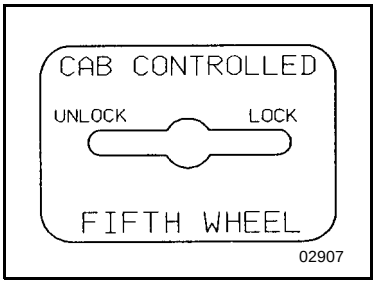

WARNING! Do not move of the fifth wheel while the tractor-trailer is in motion. Movement of the fifth wheel while a tractor-trailer is moving can cause a serious accident. Your load could shift suddenly, causing you to lose control of the vehicle. Never operate the vehicle with the switch in the unlock position. Always inspect the fifth wheel after you lock the switch to be sure the fifth wheel is engaged

Vehicles having an air slide fifth wheel have a fifth wheel slider lock controlled by a switch on the instrument panel. By placing the switch in the unlock position, you can slide the fifth wheel to various positions to adjust weight distribution. There is a guard over this switch to protect you against accidentally activating or releasing the lock.

VARASHIELD® Wind Deflector Switch

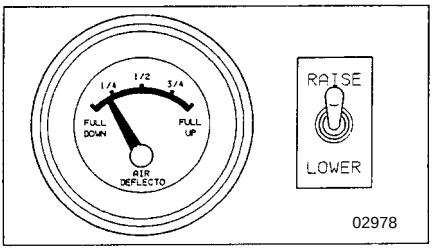

The VARASHIELD Wind Deflector is a roof-mounted, adjustable shield for improving vehicle aerodynamics.

You may have a manual or an electric VARASHIELD. The electric model is controlled by a dash-mounted toggle switch. If you have one of these, you may vary the VARASHIELD angle from 0 degrees to 50 degrees while the vehicle is stationary or in motion. The gauge on the dash indicates the position.

https://truckmanualshub.com/

PART 4: CONTROLS AND DISPLAYS

WARNING! Operating the electric VARASHIELD with someone near it can be dangerous. Moving parts could cause an injury to hands, feet, or anything else in the way. Do not operate the VARASHIELD when anyone is near it.

CAUTION: The electric motor of a VARASHIELD is designed for use during moderate, slow speed operation only. Do not operate it while driving at speeds greater than 35 mph. Do not operate the VARASHIELD if it is obstructed by ice or packed snow. Additionally, excessive continuous operation could cause the motor to overheat. Do not change the angle continually.

Manual Adjust

WARNING! You could fall and be badly injured by trying to climb to the top of the cab without the right equipment. Always use a ladder or scaffolding to get up to adjust your manual VARA-SHIELD.

If you have the manual VARASHIELD, you will adjust it from the roof of the cab. Move it to the desired angle with the telescoping strut that is secured by a bolt and locknut. Proper VARASHIELD angle is affected by wind, trailer height, and the gap between the tractor and trailer. Usually the VARASHIELD should be down, at 0 degrees, when the tractor is operating without a trailer or pulling a flatbed. With all other trailers, you adjust the VARA-SHIELD to its best angle by noticing the lower manifold boost pressure at cruise (as indicated by the manifold pressure gauge), or the reduction in road dirt deposited on the front of the trailer.

Parking Brake Valve and Trailer Air Supply Valve

Single Valve

Your parking brake valve is a yellow diamond-shaped knob located on the right-hand control panel of conventional cab models and on

https://truckmanualshub.com/

the console panel of COE models. It controls the parking brakes for straight truck or tractor-trailer combinations.

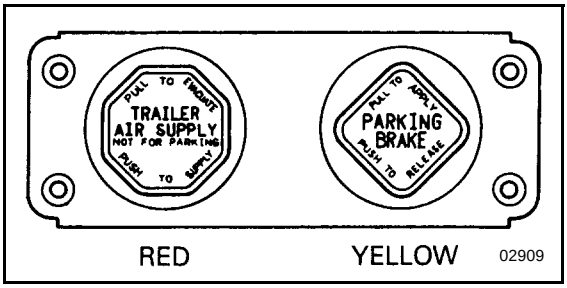

WARNING! Stopping with the parking brake controls can cause a sudden wheel lock-up, loss of control, or can cause you to be overtaken by following vehicles. You could be severely injured. Never pull out the parking brake valve while the vehicle is moving.

To apply all parking brakes, pull the yellow, or parking brake, knob out. The truck or tractor parking brakes will set, and the Trailer Air Supply Valve (red octagon knob) will automatically trip ("pop out") and set the trailer parking brakes. To release both truck/tractor and trailer parking brakes, push in BOTH yellow and red knobs. For full information on using parking brakes, see the Index, under Brakes.

Heater-Air Conditioning Controls

Your heat and air conditioning controls are mounted on the dog house instrument panel in COE models and below the right hand instrument panel in conventional models. Additionally, the sleeper compartment may also contain a separate heating and cooling system with separate controls.

WARNING! Exhaust fumes from the engine contain carbon monoxide, a colorless and odorless gas. Do not breathe the engine exhaust gas. A poorly maintained, damaged or corroded exhaust system can allow carbon monoxide to enter the cab or sleeper. Entry of carbon monoxide into the cab is also possible from other vehicles nearby. Failure to properly maintain your vehicle could cause carbon monoxide to enter the cab/sleeper and causes serious illness.

CAUTION: Never idle your vehicle for prolonged periods of time if you sense that exhaust fumes are entering the cab or sleeper. Investigate the cause of the fumes and correct it as soon as possible. If the vehicle must be driven under these conditions, drive only with the windows slightly open. Failure to repair the source of the exhaust fumes may lead to personal harm.

https://truckmanualshub.com/

PART 4: CONTROLS AND DISPLAYS

NOTE: Keep the engine exhaust system and the vehicle's cab/sleeper ventilation system properly maintained. It is recommended that the vehicle's exhaust system and cab/sleeper be inspected

- *By a competent technician every 15,000 miles*
- *Whenever a change is noticed in the sound of the exhaust system*
- *Whenever the exhaust system, underbody, cab or sleeper is damaged*

NOTE: To allow for proper operation of the vehicle ventilation system, keep the inlet grille at the base of the windshield clear of snow, ice, leaves and other obstructions at all times.

NOTE: Do not stay in the vehicle with the engine running or idling for more than 10 minutes with the vehicle's Heater and A/C ventilation system in RECIRC or at LOW FAN SPEED. Even with the ventilation system On, running the engine while parked or stopped for prolonged periods of time is not recommended.

NOTE: If you are required to idle your vehicle for long periods of time, install an auxiliary heater or automatic idle control. These auxiliary devices can reduce fuel consumption and save you money.

NOTE: When idling for short periods of time

- *Set the heating or cooling system to Heat or A/C*
- *Set the fan to Medium or High speed*
- *Set the controls to FRESH AIR*

NOTE: If other vehicles are parked next to you idling, move your vehicle or do not stay in your vehicle for prolonged periods of time.

To Set the Heater-Air Conditioning Controls

COE:

The COE panel contains two toggle switches and three sliding levers for providing cab temperature control in all weather conditions (see illustration below). A secondary panel is located on the upper left wall of the bunk or sleeper and contains two toggle switches and a rotary thermostat switch to control the temperature. The thermostat controls the operation of the blower to maintain temperature within the selected range.

https://truckmanualshub.com/

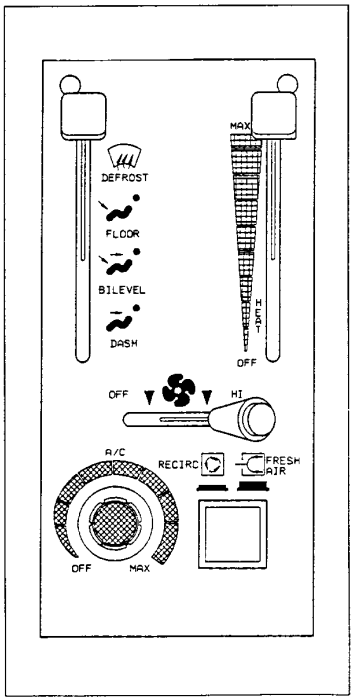

COE Cab Control Panel

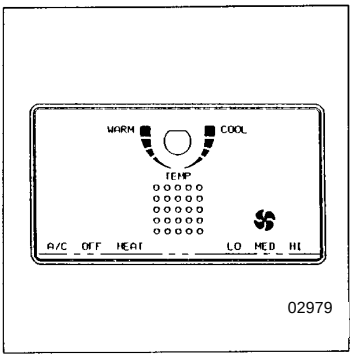

COE Sleeper Control Panel

Conventional Cab:

The Conventional cab's control panel may have up to six controls (four for vehicles without a sleeper unit); see illustration below:

- A rotary knob (A) in the upper left portion controlling the blower speed with four settings.
- A rotary knob (B) in the upper center portion controlling the movement of air within the cab. This control is continuously variable through five modes (clockwise from left):
  - Panel
  - Panel/Floor
  - Floor
  - Defrost/Floor
  - Defrost
- A rotary knob (C) in the upper right portion controlling the air temperature.
- A rocker switch (D) in the lower left portion to engage the air conditioner compressor (only vehicles with air conditioning).

https://truckmanualshub.com/

- A rocker switch (E) in the lower center portion to select either fresh or recirculated air mode.
- A rocker switch (F) on the lower right portion to send power to the “bunk” or sleeper control panel (only vehicles with a sleeper unit).

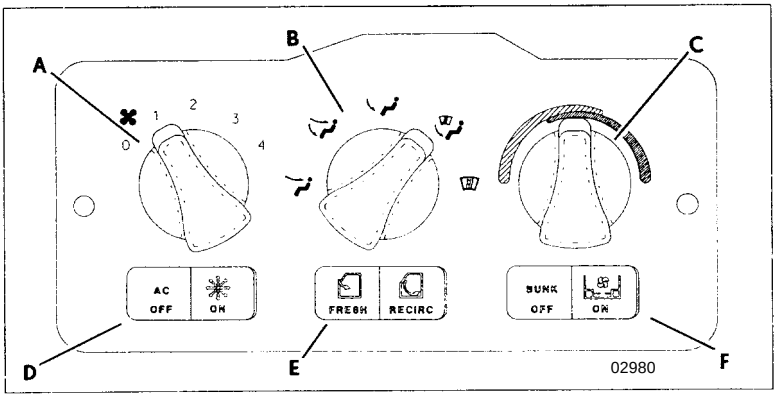

Conventional Cab Control Panel (vehicle with heater and air conditioning and equipped with a sleeper)

The conventional sleeper control panel will have three controls (two for vehicles without air conditioning); see next illustration

- A rotary knob (A) in the left portion controlling the blower speed with four settings.
- A rotary knob (B) in the right portion controlling the air temperature.
- A rocker switch (C) in the center portion to engage the air conditioner compressor (only vehicles with air conditioning).

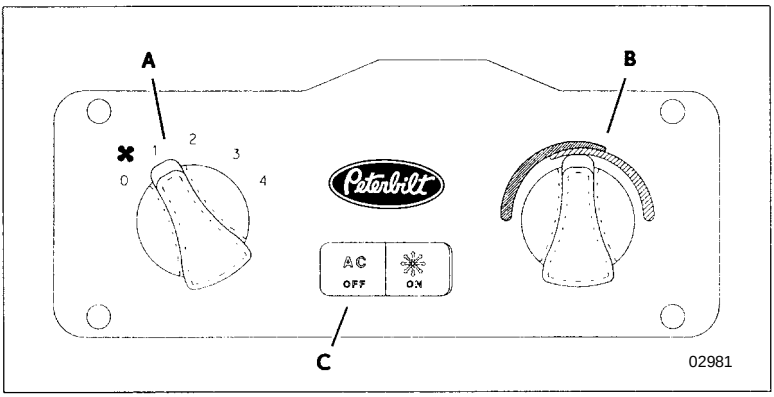

Conventional Sleeper Control Panel (vehicle with heating and air conditioning)

https://truckmanualshub.com/

The cab “bunk” control rocker switch must be ON for the sleeper controls to function.

- **To heat the cab,** select the desired air mode and set the temperature knob to hot (the red position on the control) and the blower to whatever speed makes you most comfortable.

WARNING! Do not drive with visibility reduced by fog, condensation, or frost on the windshield. Your view may be obscured, which could result in an injury accident. For clear visibility and safe driving it is extremely important for you to follow the instructions pertaining to the function and use of the ventilation/heating and defogging/defrosting system. If in doubt, consult your dealer. Maximum heating output and fast defrosting can be obtained only after the engine has reached operating temperature.

CAUTION: During extreme cold weather, do not blow hot defroster air onto cold windshields. This could crack the glass. Turn the air flow control lever to Defrost and adjust the fan speed accordingly while the engine warms. If the engine is already warm, move the temperature selector to Cool, then gradually increase the temperature when you see that the windshield is starting to warm up.

- **To defog the windshield,** select the Defrost mode and turn the blower speed to high. Set the temperature knob to hot (the red position on the control). The air conditioner is automatically activated to remove moisture from the cab. After the windshield is clear, adjust the mode, blower speed, and temperature to your comfort.
- **To cool the cab,** turn on the A/C switch, set the temperature knob to cool (the blue position on the control), and the blower to high until the cab becomes cool. Then you can turn down the blower if you wish.

For Efficient Cooling:

1. Be sure all heater - air conditioner controls are off.
2. Start the engine. Allow time for warm-up.

CAUTION:

- ***A cold compressor can cause refrigerant to liquefy and warp the valve plates or cause a hydraulic lock. Warm the engine before starting the air conditioner.***
- ***To avoid damage to the compressor& blower motors, turn off all controls when a system is not in use.***

3. Set the air control in the RECIRC mode.

https://truckmanualshub.com/

4. Close all windows.
5. Idle the engine between 1000 and 1500 RPM and turn the blower speed control to high.
6. After the cab temperature cools to a comfortable level, adjust the blower speed and controls to keep the desired condition.

NOTE: When the air conditioner isn't in regular use, operate it for at least 15 minutes at least once a month or every 5,000 miles(8,000 Km), whichever comes first. This will lubricate the seals in the air conditioning system. The air conditioning system is active when the Defrost mode is selected.

Cigarette Lighter

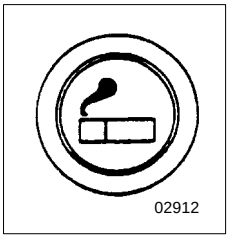

Lighter

To operate your lighter, push the knob in. After a few moments the lighter will automatically pop out, ready to use. After use, insert the knob, but don't push it in. The lighter circuit is protected by a 20-ampere fuse to prevent damage should the lighter get stuck in the IN position. If this fuse needs replacement, check to ensure that the lighter is not stuck before replacing the fuse.

WARNING! Do not exceed the voltage/amperage capacity of the cigarette lighter. It could result in a fire. Follow all warnings and instructions in the operator's manual for the appliance you are using.

The lighter receptacle may be used to power auxiliary equipment that does not draw more than 20 amperes maximum.

Ashtray

WARNING! Paper or other combustible substances in an ashtray could cause a fire. Keep all burnable materials besides smoking materials out of the ashtray.

https://truckmanualshub.com/

Glove Compartment

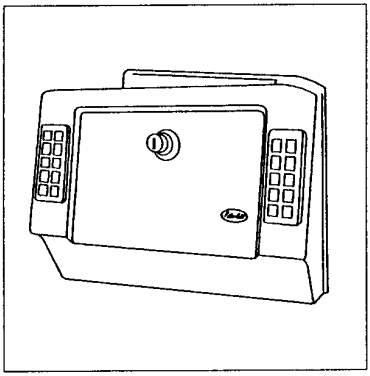

Conventional

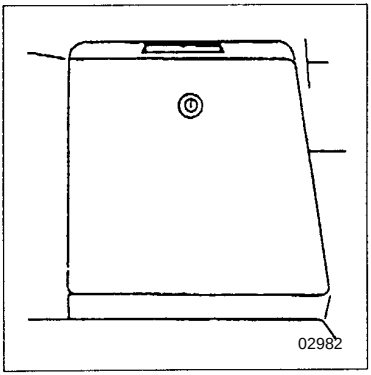

COE

To open your glove compartment, push or turn the latch. To close it, push the cover up and press to latch it.
The glove compartment can be locked. Turn your ignition key clockwise (right) to lock and counterclockwise (left) to unlock.

WARNING! An open glove compartment can be dangerous. In an accident or sudden stop, you or a passenger could be thrown against the cover and injured. Keep the cover closed when the vehicle is in motion.

https://truckmanualshub.com/

PART 4: CONTROLS AND DISPLAYS

Gauges

On the pages that follow you will find descriptions of some of the gauges on your instrument panel. For more information about using them in driving, see PART 7: STARTING & OPERATING THE VEHICLE. Also check the Index under the name of the gauge or function you want to know more about.

WARNING! Do not ignore a warning light or buzzer. These signals tell you something is wrong with your vehicle. It could be a failure in an important system, such as the brakes, which could lead to an accident. Have the appropriate system checked immediately.

Speedometer / Odometer

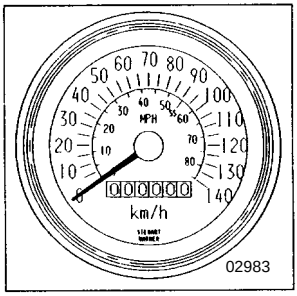

The speedometer indicates your vehicle's speed in miles per hour and in kilometers per hour. The odometer, in the center of the speedometer, records the miles your vehicle has traveled.

Trip Odometer

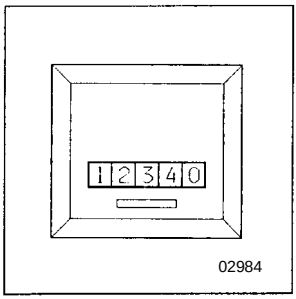

Some vehicles are also equipped with a trip odometer which tells how many miles the vehicle has gone on a particular trip. To use it, press the button next to the trip odometer. The numbers will record 0, and will then begin to count the miles traveled. To start over, just push the button again.

https://truckmanualshub.com/

Tachometer

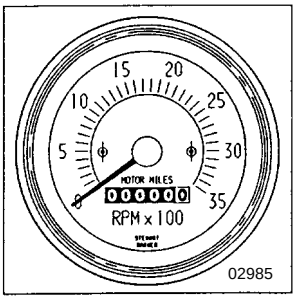

Your tachometer measures the engine speed in revolutions-per-minute (RPM). Watching your tachometer is important to driving efficiently. It will let you match driving speed and gear selection to the operating range of your engine. If your engine speed gets too high, you can select a higher gear to lower the RPM. If your engine speed drops too low, you can select a lower gear to raise the RPM.

Air Application Gauge

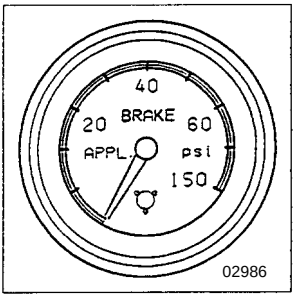

This gauge will show you how much air pressure is being applied from your foot brake valve or trailer brake hand valve.

https://truckmanualshub.com/

PART 4: CONTROLS AND DISPLAYS

Dual Air Pressure Gauge (Air Reservoir)

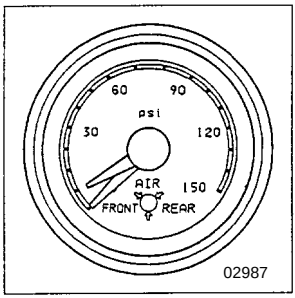

The dual air pressure gauge indicates the amount of air pressure in the brake system in pounds per square inch (psi). The white pointer shows the front reservoir air pressure, and the red pointer indicates pressure in the rear reservoir. Ensure the air pressure registers more than 100 psi in both service systems before you move the vehicle.

If the pressure in either or both circuits is too low for normal brake operation (the pointer of one gauge is in the red sector), a warning light in the panel will glow and the audible alarm will sound.

WARNING! The air pressure warning light and the audible alarm indicate a dangerous situation. There is not enough air pressure in the reservoirs for repeated braking and the brake system has failed. If air pressure falls below 60 psi (414 kPa) the spring brakes could suddenly apply, causing a wheel lockup, loss of control, or your vehicle to be overtaken by following vehicles. You could be in an accident and severely injured. If these alarms come on while you are driving, bring your vehicle to a safe stop right away. If the light and alarm do not turn off at start-up, do not try to drive the vehicle until the problem is found and fixed

https://truckmanualshub.com/

Engine Oil Pressure Gauge

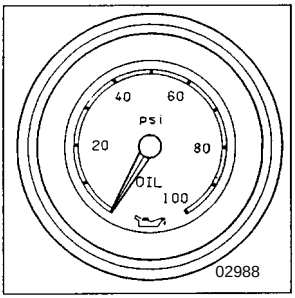

It is important to maintain oil pressure within acceptable limits. Your engine manual will give normal operating pressures for your engine.

CAUTION: Continuing to operate your vehicle with insufficient oil pressure will cause serious engine damage

If your oil pressure fails to rise within 10 seconds after your engine starts, stop the engine and determine the cause.

If your oil pressure suddenly drops while you are driving, bring the vehicle to a stop as soon as possible in a safe location off the road and turn off the engine. Wait a few minutes to allow oil to drain into the oil pan, and then check the oil level. Add oil if necessary. If the problem persists, contact an authorized service center.

Check the engine manufacturer's manual for the correct oil pressure ranges for your engine.

Water Temperature Gauge

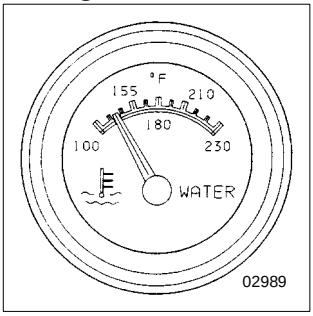

The water temperature gauge shows the temperature of the engine coolant. Under normal operating conditions the water temperature gauge should register between 165° and 205° F (74° and 90° C). Under certain conditions, somewhat higher temperatures may be acceptable. But the maximum allowable temperature is 210° F (99° C) with the cooling system pressurized, except for certain special engines. Check your engine manual to be sure.

https://truckmanualshub.com/

Engine Overheating

WARNING! Do not remove the radiator fill cap while the engine is hot. Scalding steam and fluid under pressure may escape and cause serious personal injuries. You could be badly burned.

- ***Wait until the coolant temperature is below 122°F (50°C).***
- ***Protect face, hands, and arms by covering the cap with a large, thick rag to protect against escaping fluid and steam.***
- ***Carefully and slowly turn the cap one-quarter of a turn or until it reaches the first stop—allowing excess pressure to escape—push down and turn for final removal.***

Wait until the coolant temperature is below 122° F (50° C). Protect your face, hands, and arms by covering the cap with a large, thick rag to protect you against escaping fluid and steam. Before you completely remove the cap, carefully and slowly turn the cap part way to allow excess pressure to escape. Then push down and turn for final removal.

The cooling system may overheat if the coolant level is below normal or if there is a sudden loss of coolant (such as a worn hose splitting). It may also temporarily overheat during severe operating conditions such as climbing a long hill on a hot day or stopping after high-speed driving.

If the “Engine Coolant Temperature” warning light comes on, or you have any other reason to suspect the engine may be overheating:

- Stop the vehicle, but DON’T TURN OFF THE ENGINE unless a low water warning device indicates a loss of coolant.
- With the transmission in neutral, check to be certain the oil pressure gauge reads normal. Increase the engine speed to about 1100 - 1200 RPM, maximum. Return the idle speed to normal after 2 or 3 minutes. If the warning light doesn’t go off or the temperature gauge doesn’t begin to drop, then turn the engine off.
- If the overheating came from severe operating conditions, the temperature should have cooled by this time. If it has not, stop the engine and let it cool before checking to see if the coolant is low.

https://truckmanualshub.com/

Fuel Gauge

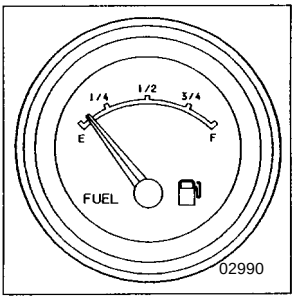

WARNING! Do not remove a fuel tank cap near an open flame. Hot fuel vapors are combustible and can cause an explosion or fire resulting in injury or death.

The fuel gauge shows the approximate amount of fuel in the fuel tanks. Besides empty and full, the gauge also indicates 1/4, 1/2, and 3/4 of total capacity. You will want to keep your fuel tanks at least half full to reduce condensation of moisture in the tanks. This moisture can damage your engine.

WARNING! Carrying additional fuel containers in your vehicle is dangerous. Full or empty, they may leak, explode, and cause or feed a fire. Don't carry extra fuel containers - even empty ones.

Warning Lights and Buzzers

WARNING! Ignoring a warning light or buzzer could lead to an accident. These signals tell you something is wrong with your vehicle. It could be a failure in an important system, such as your brakes. Never ignore a warning signal. Have the appropriate system checked right away.

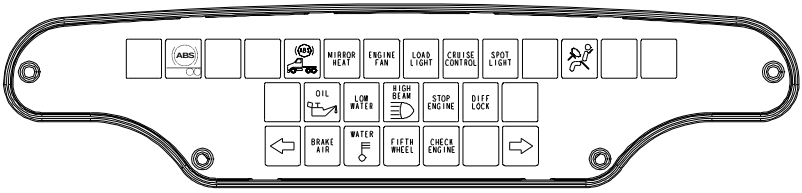

Conventional Lamp Cluster

https://truckmanualshub.com/

PART 4: CONTROLS AND DISPLAYS

COE Lamp Cluster

When you turn on your ignition, the following will turn on for 3 - 5 seconds, as a test to let you know they are working.

LAMPS:

- •Diff Lock
- •Water Temp
- •Mirror Heat
- •Brake Air
- •Fifth Wheel
- •Oil Pressure
- •ABS
- •Trailer ABS
- •Low Water
- •Left Turn
- •Load Light
- •High Beam
- •Right Turn
- •Engine Fan
- •Airbag System Warning Light

BUZZER: The warning buzzer sounds to let you know some of the systems are working.

OPTIONAL LAMPS: Additional lamps may be operational depending on how the truck is equipped. These will also turn on for three seconds as a test to let you know they are working (see ABS lamp information on page 93). After this self-test period, the module operates normally.

The warning lights and buzzer may indicate something is wrong with one of the vital systems on your vehicle. Check the lights frequently, and respond properly as soon as you see one go on. These lights could save you from a serious accident.

WARNING! Ignoring a warning light could lead to an accident. These signals tell you something is wrong with your vehicle. It could be a failure in an important system, such as the brakes. Never ignore a warning signal. Have the appropriate system checked right away.

https://truckmanualshub.com/

Transmission Temperature Gauge

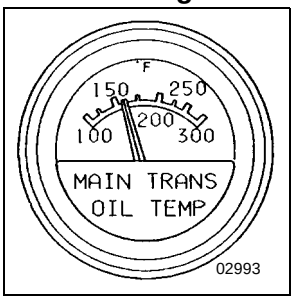

Your Transmission Temperature Gauge indicates the temperature of the oil in your transmission. Watch this gauge to know when your transmission is overheating. If it is, have it checked by an authorized service representative.

Maximum transmission temperature may vary, depending upon the transmission and type of lubricant. Check your transmission's owner's manual.

Forward Drive Axle Temperature Gauge

Rear Drive Axle Temperature Gauge

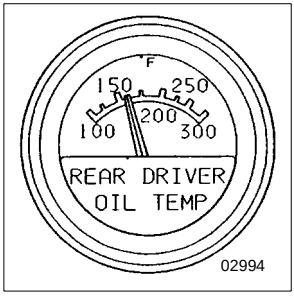

These gauges indicate the temperature of the lubricant in your vehicle's axle(s). These temperatures will vary with the kind of load you are carrying and the driving conditions you encounter. Maximum axle temperature may vary, depending upon the axle and type of lubricant. Very high temperatures signal a need to have your axle(s)' lubrication checked.

CAUTION: Driving with very hot temperatures in your rear drive axles can cause serious damage to axle bearings and seals. Have your axle lubrication checked if you notice a sign of overheating.

https://truckmanualshub.com/

PART 4: CONTROLS AND DISPLAYS

Manifold Pressure Gauge

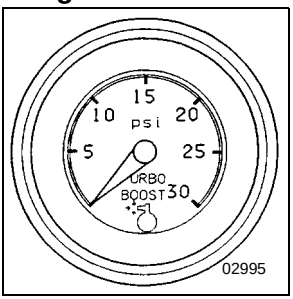

Your manifold pressure gauge indicates the power your engine is putting out by showing the amount of turbo boost. If the pressure indicated by your manifold pressure gauge goes down, there may be something wrong with your engine. Have it checked by a qualified service person.

Pyrometer

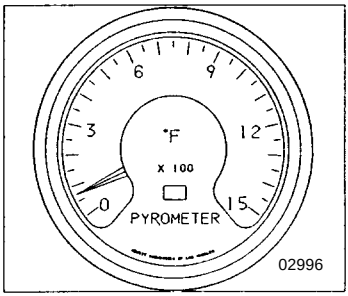

The pyrometer gauge indicates engine exhaust gas temperature. Since it responds almost immediately to changes in exhaust gas temperature, the pyrometer is an excellent indicator of engine output.

Monitor it in conjunction with the tachometer and manifold pressure gauge. The pyrometer can be a useful aid to operating your truck more efficiently and avoiding sudden changes in engine operating temperature. See your engine owner's manual for maximum temperature recommendations.

Ammeter

Your ammeter tells you whether your electrical system is "in balance" and operating normally. If not, it may be drawing power from the alternator (positive reading) or from the batteries (negative reading).

NOTE: Under normal conditions the ammeter will read nearly "zero." If it begins to read noticeably above or below the "zero" balance point, have the system checked out immediately. If you do not, you could have a roadside breakdown.

https://truckmanualshub.com/

Air Filter Restriction Indicator or Gauge

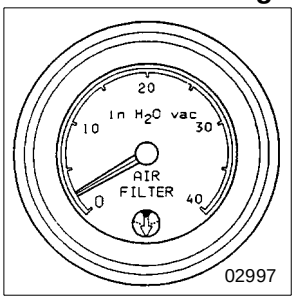

This gauge indicates the condition of the engine air cleaner and is measured by inches of water (H_2O). A clean filter should register 7" H_2O (may vary with system design) and a filter whose life is over will register approximately 25" H_2O.

CAUTION: Continued operation with the Air Filter Restriction Gauge reading 25" H_2O may cause damage to the engine. Inspect the filter and replace if necessary. Holes in the paper element render an air cleaner useless and may cause the Air Filter Restriction Gauge to give a false reading, even if the element is clogged. Replace the element if it is damaged.

Shift Pattern Display

The correct shift pattern for your vehicle appears on your control panel or windshield or on a medallion in the shift knob. It is important that you know more about your transmission than just the shift pattern. Please read the manufacturer's manual that is included with your vehicle.

Mirrors

Your vehicle is equipped with outside mirrors to enable you to see to the sides and behind your vehicle. Be sure they are adjusted properly before you drive off. You will have the best field of view to the side if you adjust each mirror so you can just see the side of your vehicle in the inboard part of the mirror.

WARNING! Optional convex outside rear view mirrors make objects appear smaller and farther away than they really are. You could have an accident if you were too close to another vehicle or other object. Keep plenty of space between your vehicle and others when you turn or change lanes. Remember that other objects are closer than they seem.

https://truckmanualshub.com/

Luggage Compartment(s)

An interior luggage compartment is under the bunk in the Conventional sleeper. The exterior compartment is beneath the bunk, opening from the driver's side, on the outside of the cab.

WARNING! Carrying objects loose in your cab or sleeper can be dangerous. In a sudden stop, or even going over a bad bump, they could fly forward and strike you or a passenger, possibly causing serious injury. Secure loose objects. Carry any heavy objects in the exterior luggage compartment and close it securely.

Appliances in the Cab

You may decide to equip your vehicle with a radio, a refrigerator, or other appliances and conveniences. Be sure they are compatible with your truck's electrical system. Secure them in the cab so they can't fly loose in a sudden stop.

WARNING! In a sudden stop or collision a heavy object in your cab could strike you or anyone with you. You could be injured or even killed. Secure any appliance (such as a refrigerator or radio) you add to your cab.

UltraSleeper Table

Follow the procedure below to deploy the table in an UltraSleeper.

1. Pull on the leg loop (see Illustration) until the leg snaps open.

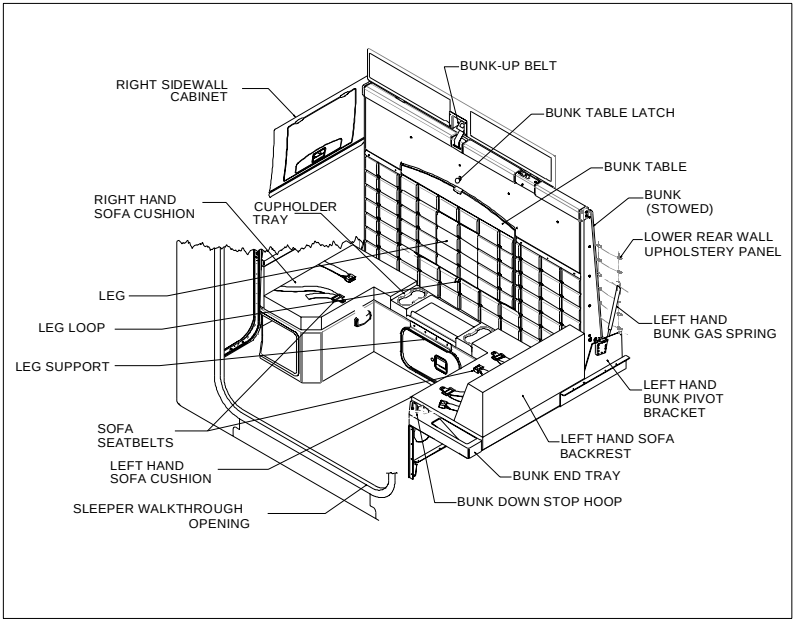

https://truckmanualshub.com/

2. Raise the bunk table latch and pull the table away from the bunk.
3. Lower the table and guide the leg into the leg support, which is bolted to the door jamb of the through-compartment access door (see previous illustration).

Follow the procedure below to stow the table.

CAUTION: To avoid possible damage or injury from an unrestrained table, ensure that the table is latched when in the stowed position.

1. Lift the table.
2. Raise the bunk table latch and stow the table completely in the recess in the bunk.
3. Lower the bunk table latch and snap the table leg in place.

UltraSleeper Refrigerator

Follow the procedure below to operate the refrigerator.

NOTE:

- *For additional information about the refrigerator, refer to the refrigerator owner's manual that came with this appliance.*
- *During periods of extended refrigerator use, it may be necessary to run the engine to avoid excess drain on the vehicle's batteries.*
- *Refrigerator cooling ability decreases as sleeper temperature increases.*

The main power supply to the refrigerator and cooling fan (located behind the refrigerator) is controlled by a switch labeled "REFRIG/FAN" located on the sleeper control panel.

- To turn the refrigerator and cooling fan on, move the REFRIG/FAN switch to ON, then turn the thermostat dial (located inside the refrigerator) clockwise from the OFF setting.
- To turn the refrigerator and cooling fan off, turn the thermostat dial inside the refrigerator counterclockwise to the OFF setting, then move the REFRIG/FAN switch to OFF.
- To turn only the refrigerator off, turn the thermostat dial counterclockwise to OFF.

https://truckmanualshub.com/

UltraSleeper Bunk

Follow the procedure below to deploy the bunk in an UltraSleeper.

CAUTION: To avoid possible damage, do the following before deploying the bunk:

- ***Ensure that the table is latched in the stowed position and that the right sidewall cabinet door is latched closed (see previous illustration).***
- ***Remove all items from the center cupholder tray, bunk down stop tray, and sofa cushions (see previous illustration).***
- ***Place sofa seatbelts flat on the cushions or stow them under the cushions.***
- ***Remove and stow the left-hand sofa backrest (see previous illustration).***

NOTE: Bunk upswing and downswing will be assisted and dampened, respectively, by the bunk gas springs. The amount of assistance and dampening will vary with sleeper temperature: these amounts are reduced in colder temperatures and increased in warmer temperatures.

1. Unlatch the bunk-up belt (see previous illustration) and pull the bunk forward. The bunk will swing down and come to rest in a horizontal position.
2. Latch the bunk in the down position. Ensure the bunk latch engages. If the bunk latch doesn't properly engage the down stop bracket hoop as shown below, or if there is too much play between latch & hoop, have the latch adjusted by a Peterbilt dealer.

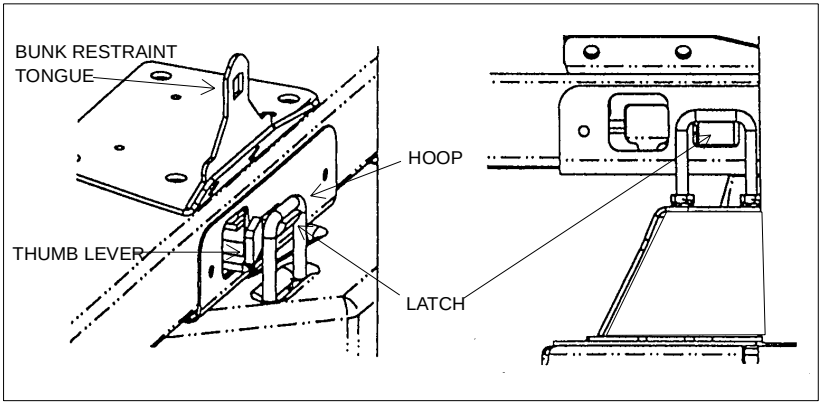

3. Attach the bunk restraint end buckles to the bunk restraint tongues.

https://truckmanualshub.com/

The UltraSleeper bunk restraint is attached to the sleeper in three locations (see illustration below):

- The bunk front: Access to the bunk is easiest when one or both of the bunk restraint (buckle) ends are detatched from the bunk restraint tongues.
- The roofbow: The roofbow-mounted tether straps are adjustable so that the restraint may be tightened up when fully deployed.
- The upper rear wall: The restraint is attached to the upper rear wall by two removeable mounting bolts.

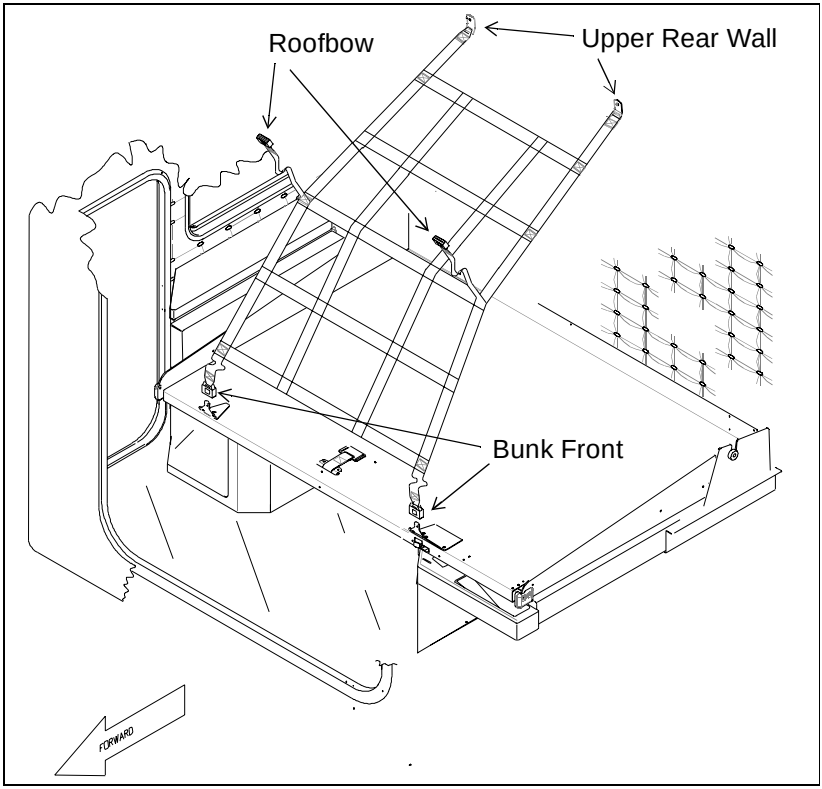

https://truckmanualshub.com/

Follow the procedure below to stow the bunk in an UltraSleeper.

CAUTION: To avoid damage, do the following before stowing the bunk:

- ***Ensure that the right sidewall cabinet door is latched closed.***
- ***Remove all items from the top of the bunk mattress, and arrange bedding so that items will not slide down the mattress and fall behind the bunk.***

NOTE: If the restraint is left unattached from the roofbow and bunk restraint tongues, then it may get pinched behind the pivoting bunk and the rear wall of the sleeper when the bunk is stowed. If this happens, unbuckle the bunk-up belt and rotate the bunk open just enough to reach behind the bunk. Free the restraint net, then rotate the bunk fully down.

1. (Optional) Detach the bunk restraint end buckles from the bunk restraint tongues.
2. Push in on the thumb lever of the bunk down latch to release the bunk.
3. Lift up the bunk and swing it up to a vertical stowed position.

WARNING! To avoid possible damage or injury from an unrestrained bunk, always latch the bunk-up belt when the bunk is stowed.

4. Latch the bunk-up belt. If the bunk leans forward when stowed, have the belt adjusted or the gas springs serviced by a Peterbilt dealer.

https://truckmanualshub.com/

PART 5: SEAT AND RESTRAINT SYSTEMS

Seat

For information on the features and adjustment of the seat, see the seat manufacturer's literature included with the vehicle.

WARNING! Do not drive or ride with your seat back in the reclined position. You could be injured by sliding under the seat belts in a collision.

WARNING! Do not adjust the driver's seat while the vehicle is moving. The seat could move suddenly and unexpectedly and can cause you to lose control of the vehicle. Make all adjustments to the seat while the vehicle is stopped. After adjusting the seat and before driving off, ensure that the seat is firmly latched in position.

Seat Belts And Their Proper Use

Seat (or safety) belts have proven to be the single most effective means available for reducing the risk of serious injury and death in motor vehicle accidents. It's not just an opinion -- it's a fact: Seat belts save lives.

WARNING! Do not drive vehicle without your seat belt and your riders' belt fastened. Riding without a safety belt properly fastened can lead to increased injury or death in an emergency. Unbelted riders could be thrown into the windshield or other parts of the cab or could be thrown out of the cab. They could strike another person. Injuries can be much worse when riders are unbelted. Always fasten your seat belt

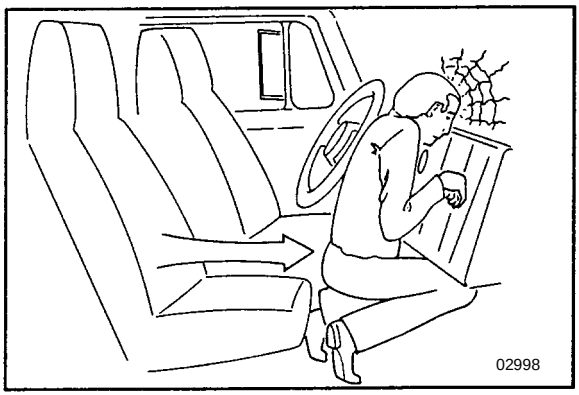

Person In Crash, Unbelted

https://truckmanualshub.com/

Shoulder Belt

Your combination shoulder-lap belt needs proper adjustment:

- The lap portion should be worn as low on the hips as possible.

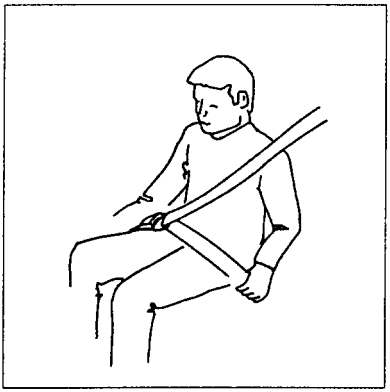

Properly worn belt

Improperly worn belt

WARNING! You can be seriously injured if your belt is buckled too high. In a crash, it would apply force to your abdomen, not your pelvic bones. This could cause serious internal injuries. Always wear your seat belt low over your pelvic bones.

- The shoulder portion should fit snugly across your body. It should always be worn over the shoulder next to the door. It you put the belt under your arm, it can't protect you properly.

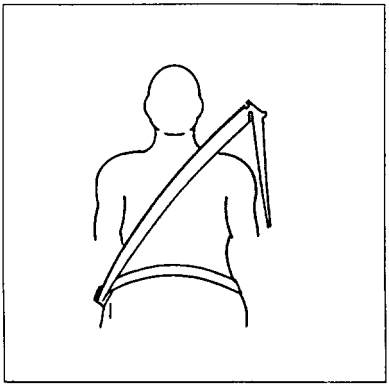

Correct (over arm)

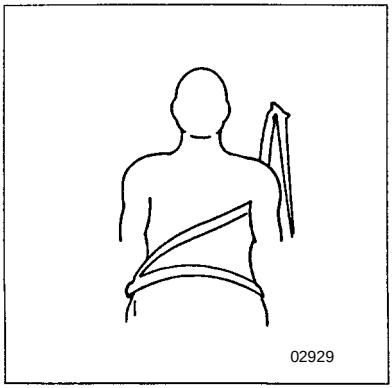

Incorrect (under arm)

https://truckmanualshub.com/

WARNING! Wearing the shoulder belt under your arm could lead to serious injury. In a crash your body would move too far forward, increasing the chance of head and neck injury. And the belt would apply too much force to the ribs, which aren't as strong as your shoulder bones. You could also suffer internal injuries. Wear the shoulder belt over your shoulder.

- Be sure, also, that your belt is not too loose. A loose belt could allow you to slide under it in an accident, and that could bring the belt up around your abdomen.

WARNING! A too-loose seat belt can lead to injury in a crash. It can allow you to fall too far forward, possibly causing head and neck injuries. You could strike the wheel or the windshield. Adjust your belt so that there is no more than one inch (25 mm) of slack.

- Watch that you don't twist the belt in the process of putting it on. A twisted belt won't work as well to protect you.

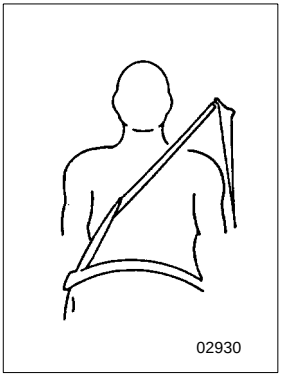

Twisted Belt

WARNING! You could be seriously injured by a twisted belt. In a crash, the full width of the belt wouldn't be protecting you. And the twisted belt could cut into your body. Straighten the belt before buckling it. If you can't, have your dealer or service person fix it.

To connect your shoulder-lap belt: Grasp the belt tongue and pull in a smooth, slow motion across your chest and lap. Insert the tongue into the buckle on the inboard side of the seat. Push down until you hear a click. Pull on the belt to make sure it is buckled. Check that it is positioned correctly on your body.

https://truckmanualshub.com/

PART 5: SEAT AND RESTRAINT SYSTEMS

Komfort-Lok® Feature

Your Peterbilt contains a feature designed to eliminate cinching and provide improved safety and comfort. Cinching is the condition where a belt becomes continually tighter around you during a rough, bouncy ride. The need for this feature increases with rough road conditions, particularly over long distances.

To eliminate cinching simply activate the Komfort-Lok feature at the appropriate time:

1. Fasten your seat belt according to the directions above.
2. You are now ready to activate the Komfort-Lok. Lean forward to pull a little slack (about 1 inch) in the belt. Be sure to allow only a small amount of slack. See the Warning on a loose belt, on the previous page.

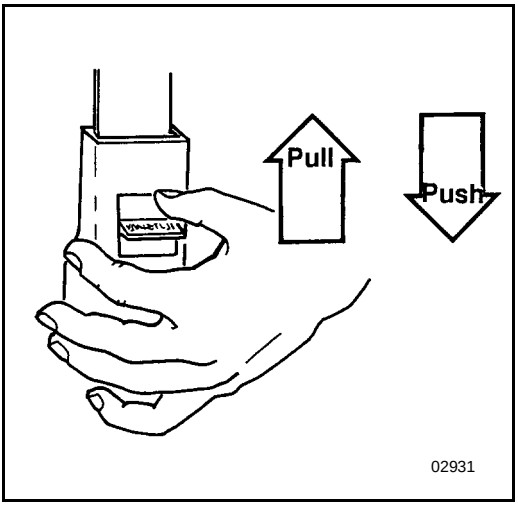

Komfort-Lok®

3. When the slack is right, flip the latch cover up, cinching it into place. This locks the Komfort-Lok.
4. To release the Komfort-Lok latch, reach up and pull the latch cover open (down), or simply pull down on the shoulder belt.
5. When you want to get out of the cab, release the latch, then just push the button on the buckle.

https://truckmanualshub.com/

Pregnant Women: Sometimes pregnant women worry that in a crash the seat belt could hurt the baby. But if a woman wears her belt properly - low over her pelvis, below her abdomen - the belt won't harm the baby, even in a crash. And remember - the best way to keep an unborn baby safe is to keep the mother safe.

Pregnant Woman With Belt Properly Worn

Sleeper Bunk Restraints

If your cab is equipped with a sleeper, be sure to use the restraint device. You may have belts which either are over the bunk or cover the opening. Of course, you do not need to use a restraint if you sleep in a parked vehicle. But anyone using the sleeper while the truck is in motion should be restrained in a safety device.

You will notice that if your Peterbilt has an upper bunk, it has no restraint device. This is because no one should ever be in an upper bunk when the vehicle is moving.

WARNING!

- ***In an accident an unrestrained person lying in a sleeper bunk could be seriously injured. He or she could be thrown from the bunk. Be sure anyone occupying the sleeper is restrained while a vehicle is moving.***
- ***Be sure that no one ever rides in the upper bunk. That person would be thrown out in an accident and could be very seriously injured.***

Passengers

Anyone riding in your vehicle should wear a seat belt. The responsible operator sees to it that everyone in the vehicle rides safely - and that means with a seat belt.

https://truckmanualshub.com/

Some Other Safety Restraint Tips:

- Don't wear belts over rigid or breakable objects in or on your clothing. Such things might be eyeglasses, pens, keys, etc. These could cause injury in an accident.
- Damaged belts in the cab or sleeper must be replaced. Belts that have been stretched, cut, or worn out may not protect you in an accident.
- Avoid catching belts in the doors or seat hardware. They could be damaged.
- Don't modify or disassemble the seat belts in your vehicle. They won't be available to keep you and your passengers safe.
- Never bleach or dye seat belts; chemicals can weaken them. Do, however, keep them clean by following the care label on the belts. Let them dry completely before allowing them to retract.
- If any seat belt is not working properly, see an authorized Peterbilt dealer for repair or replacement.

Tether Belts

Tether belts are installed on suspension seats. They help secure the seat to the floor to restrain it in case of a sudden stop or an accident.

WARNING! Do not remove, modify, or replace the tether belt system with a different tether system. A failed or missing tether belt could allow a seat base to fully extend in the event of an accident leading to greater injuries or death.

Tether Adjustment

WARNING! Failure to adjust tether belts properly can cause excessive movement of the seat in an accident. This could lead to greater injuries for you. Tether belts should be adjusted so that they are taut when the seat is in its most upward and forward position.

WARNING! Before driving or riding in a vehicle, ensure that there is adequate head clearance at maximum upward travel of seat. Serious injury may occur if head clearance is not adequate. Shorten the tether belt as necessary to provide adequate head clearance.

- Make sure the tether belt is attached to the cab deck and seat frame. It should be routed through the buckle on each side.
- To lengthen the tether, turn the buckle to a right angle to the webbing. Then pull the buckle. To shorten the tether, pull on the strap.

https://truckmanualshub.com/

Inspection of the Restraint System

WARNING! Failure to properly inspect and maintain restraint systems can lead to serious injury or loss of life. Without periodic inspection and maintenance to detect unsafe conditions, seat restraint components can wear out or not protect you in an accident.

The typical three-point seat systems in passenger cars may seem very similar to the three-point seat belt system in heavy duty vehicles, but there are some key differences that all users of this system should be aware of:

- In typical passenger vehicle automotive seat belt applications, the normal life of the vehicles is usually 8 to 10 years and the total mileage frequently does not exceed 125,000 miles (200,000 km). Heavy duty vehicles often see this type of mileage in a very short period of time, and accumulation of mileage in excess of 500,000 miles (800,000 km) during the vehicle lifetime is not unusual.
- A significant difference in the two systems is the amount of movement of webbing in the system. In an automotive application, there is little movement of the seat belt system, except when the user puts on or takes off the belt. In trucks, however, there is almost constant movement of the belt through hardware due to ride characteristics and seats which are designed to move, in order to enhance driver comfort. There can even be movement of the webbing in the seat belt system when the belt in not being used. Relative movement between the seat and the cab, which normally occurs whenever the truck is in operation, can cause wear of the seat belt webbing.
- Environmental conditions represent another major difference in the systems in automobiles and heavy duty and specialty vehicles. Unlike the automotive environment, heavy duty and specialty vehicles may be very dirty, and have more exposure to the Sun's damaging ultraviolet rays, thus resulting in a reduction of the life of the seat belt system.

The high mileage associated with heavy duty vehicles and possible wear of the 3-point seat belt system, the continual relative movement of the system, the possible contact with the vehicle seat or other parts of the cab structure, and the potential exposure of this system to severe environmental conditions make it crucial to inspect the three-point seat belt systems regularly. It is recommended that the seat belt system in a vehicle be inspected every 20,000 miles (32,000 km) or more often if the vehicle is exposed to severe environmental conditions. Any seat belt system that shows cuts, fraying, extreme or unusual wear, significant discoloration due to UV exposure, abrasion to the seat belt webbing, or damage to the buckle, latch plate, retractor hardware or any other obvious problem should be replaced immediately, regardless of mileage.

https://truckmanualshub.com/

PART 5: SEAT AND RESTRAINT SYSTEMS

WARNING! It is important to remember that any time a vehicle is involved in an accident, the entire seat belt system must be replaced. Unexposed damage caused by the stress of an accident could prevent the system from functioning properly the next time it is needed, which could result in severe injury or even death.

One of the most critical areas to be inspected is the seat belt webbing. Constant movement of the belt actually means the webbing is experiencing wear as it travels in and out of the retractor, through the pillar loop web guide and through the various pieces of hardware associated with the belt. The following guidelines detail how to inspect for cuts, fraying, extreme or unusual wear of the webbing, etc. and damage to the buckle, retractor, hardware, or other factors which indicate that belt replacement is necessary.

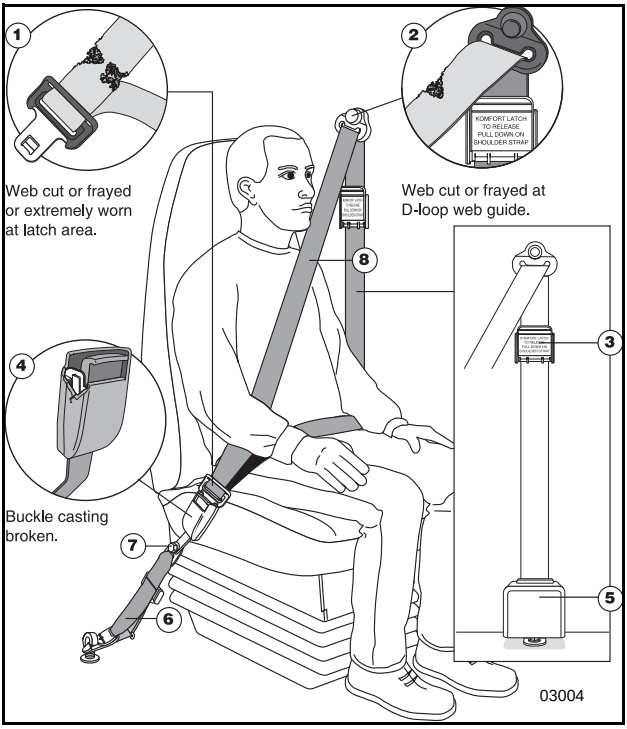

1. Check the web wear in the system. The webbing must be closely examined to determine if it is coming into contact with any sharp or rough surfaces on the seat or other parts of the cab interior. These areas are typical places where the web will experience cutting or abrasion. Cuts, fraying, or excessive wear would indicate the need for replacement of the seat belt system.
2. The D-loop web guide is the area where almost constant movement of the seat belt webbing occurs because of relative movement between the seat and the cab.

https://truckmanualshub.com/

3. Check the Komfort Latch™ for cracks or possible damage and that it works properly.
4. Check the buckle and latch for proper operation and to determine if the latch plate is worn, deformed, or damaged.
5. Inspect the retractor web storage device, that is mounted on the floor or B-pillar of the vehicle for damage. The retractor is the heart of the occupant restraint system and can often be damaged if abused, even unintentionally. Check retractor web storage device operation to ensure that it is not locked up and that it spools out and retracts webbing properly.

WARNING! Failure to adjust tether belts properly can cause excessive movement of the seat in an accident. This could lead to greater injuries for you. Tether belts should be adjusted so that they are taut when the seat is in its most upward and forward position.

6. If adjustable tethers are being used, be sure they are adjusted in accordance with installation instructions. Tethers must also be inspected for web wear, just as with the seat belt systems.
7. Mounting hardware should be evaluated for corrosion, and for tightness of bolts and nuts.
8. Check web in areas exposed to ultraviolet rays from the sun. If the color of the web in these areas is gray to light brown, the physical strength of this web may have deteriorated due to exposure to the sun's ultraviolet rays; replace the system.

WARNING! Replace the entire belt system (retractor and buckle side) if replacement of any one part is necessary. Unexposed damage to one or more components could prevent the system from functioning properly the next time it is needed, which could result in severe injury or even death.

If the inspection indicates that any part of the seat belt system requires replacement, the entire system must be replaced, both retractor and buckle side. An installation guide is attached to every replacement belt. This set of instructions is entitled "***THREE-POINT SEAT BELT INSTALLATION GUIDE."*** There are separate seat belt instruction guides for suspension and fixed bench seats. Use the proper guide for your type of seat, and follow the instructions very closely. It is vitally important that all components must be remounted back in the same position as the original components that were removed. This will maintain the design integrity of the mounting points for the seat belt assembly.

Once the need for replacement of the seat belt has been determined, be certain that it is only replaced with the recommended replacement seat belt. The occupant restraint system has been developed and tested specifically for this vehicle. If the vehicle was originally equipped with a lap belt, it cannot be replaced with a three-point shoulder harness system, because the cab mounting points are not structurally designed for a three-point seat belt.

https://truckmanualshub.com/

PART 5: SEAT AND RESTRAINT SYSTEMS

Airbag System

General Information

WARNING!

- ***Always wear your seat belt. Relying on the driver airbag alone could lead to more severe injuries in a collision. The airbag supplements your seat belt to provide proper occupant restraint.***
- ***Do not place objects, accessory equipment or stickers on or near the airbag module on the steering wheel. Any such objects could increase the risk of personal injury if the vehicle is in a collision severe enough for the airbag to inflate or could prevent the module from deploying properly.***
- ***Being too close to the steering wheel during airbag deployment could cause possible injury. Airbags need room to inflate. For the best protection***

  -fasten your seat belt

  -sit in a normal upright position

  -comfortably extend your arms to reach the steering wheel

Your vehicle may be equipped with a driver-side airbag system, otherwise known as a Supplemental Restraint System (SRS). The driver's airbag provides supplemental protection to the standard 3-point seat belt assembly in a severe frontal collision. For maximum safety, ALL occupants should always wear their seat belts whether or not an airbag is provided at their seating position to minimize the risk of severe injury or death in the event of a crash. *A properly worn seat belt is your best protection in any collision .*

The airbag system is designed to deploy during severe frontal or head-on collisions, where the vehicle collides with an object severe enough to warrant airbag protection. Less severe frontal collisions, collisions from the rear, side, or rollover accidents may not activate the system. This is normal and does not mean the airbag is faulty.

CAUTION: If the airbag system warning light stays on, doesn't come on when you start your vehicle, or comes on while driving the vehicle, take your vehicle to the nearest Peterbilt dealer for service immediately! The airbag system may have a fault that will render the system inoperable.

https://truckmanualshub.com/

Airbag System/SRS Description

The airbag system is made up of several components within the cab including

- Airbag module - mounted to center of steering wheel
- Sensor/Control system - on the floor aft of the driver seat
- Airbag (SRS) system warning light in the light bar
- Various electrical wiring harnesses and connectors
- Seat belts

Airbag Module

CAUTION: The airbag module must be replaced by an authorized Peterbilt dealer every 10 years from the air-bag's date of installation. Failure to replace the airbag module could result in nondeployment or insufficient deployment.

The driver airbag module is located in the center of the steering wheel and inflates in the event of a serious frontal collision. The module has the letters "SRS" embossed into it.

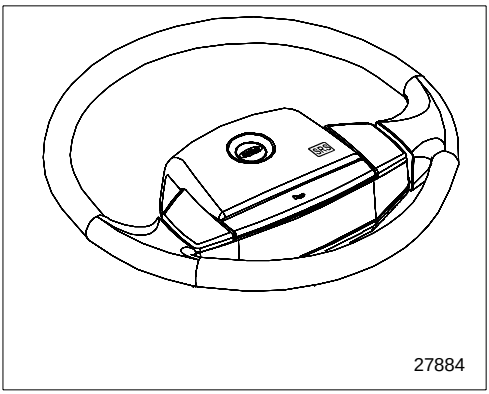

The angle of impact of the collision, crash severity, and type of object impacted play a part in whether the airbag system deploys or not. The driver airbag module is used as a supplement to the seat belt restraint system. The function of the airbag is to inflate at a precise calibrated vehicle deceleration level, typically found in higher speed frontal impacts, to provide supplemental protection for the driver. In collisions where the airbag does deploy, the seat belt is needed to help keep the driver in the correct position for the airbag to provide proper protection. The ignition must be on for the airbag to deploy.

https://truckmanualshub.com/

PART 5: SEAT AND RESTRAINT SYSTEMS

Sensor/Control Unit

The sensor/control unit is mounted on the floor of the vehicle behind the driver seat. It detects the rate of deceleration and monitors system function. The control unit has a single point electronic crash sensor. The sensor monitors the crash direction and severity of the impact. When the crash sensor detects an impact severe enough to require the airbag, it activates the inflator. A non-toxic argon gas is released to inflate the airbag cushion at the proper time. The airbag module trim cover rotates out of the way from the force of the inflating bag as the cushion reaches full size. The cushion inflates, then deflates by venting the argon gas through the airbag fabric. All this occurs in approximately one second.

Airbag (SRS) System Warning Light

CAUTION: If the airbag system warning light stays on, doesn't come on when you start your vehicle, or comes on while driving the vehicle, take your vehicle to the nearest Peterbilt dealer for service immediately! The airbag system may have a fault that will render the system inoperable.

There is an airbag system warning light in the warning light bar in the dash. The system performs self-diagnostics during vehicle start-up. The light will flash for approximately 5 seconds when the ignition is turned to the "RUN" or "START" position. When the system is operating correctly, the light will go out after 5 seconds.

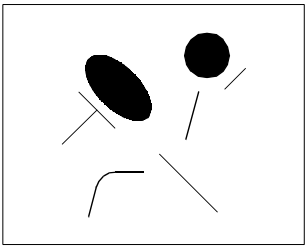

Airbag Electrical Components

WARNING! Do not attempt to repair, probe, or splice any part of the air bag system. Modifications or repairs to any part of the airbag system could result in system failure or sudden, inadvertent deployment of the airbag module and could result in possible injury. One of the components for the airbag electrical system is a clock spring harness located in the hub of the steering column. Repair work should only be performed by an authorized Peterbilt dealer.

https://truckmanualshub.com/

To connect the airbag module, sensor/control system, and the airbag warning light, numerous electrical connectors and harnesses are installed in the vehicle. They can be identified by a yellow covering. ***There are no serviceable components in the airbag system.*** When working on the vehicle's electrical system, ensure that no damage is done to the SRS electrical components as it may prevent the airbag system from operating properly or may cause it to inadvertently deploy.

CAUTION: Do not remove any steering driveline component. If removal of any steering component occurs, the clock spring harness can be damaged resulting in expensive repairs or system failure. Any repair or replacement of steering gear, steering shaft, steering column, or steering wheel must be done by an authorized Peterbilt dealer.

If an Airbag Deployment Occurs

WARNING!

- ***The airbag inflator becomes hot during deployment. To avoid burns immediately after a deployment, do not place any part of your body on the steering wheel hub.***
- ***Never attempt to drive your vehicle if the airbag has deployed. Have your vehicle towed to an authorized Peterbilt dealer anytime the airbag deploys and have the dealer replace the airbag module and check the entire system. The vehicle may not be safe to steer and the system can no longer provide proper protection.***

CAUTION: If a collision causes the airbag to deploy, the nylon airbag cushion material may cause abrasions and/or skin reddening to the driver as the airbag deploys and unfolds itself from the steering wheel. The abrasions are similar to friction rope, carpet, or floor burns. They are not caused by contact with chemicals. They are not permanent and normally heal quickly. However, if the affected areas blister, or have not healed within a few days, consult your doctor.

Vehicle Operation or Modification

The SRS sensing unit installed in your vehicle is calibrated for a specific cab and sleeper combination vehicle and designated for on-highway operation/service. Any change from the vehicle's original cab and sleeper combination or operation can cause the airbag not to perform or function properly as originally designed. If your vehicle was built with a sleeper unit, the sleeper unit must not be removed. If it is necessary to remove the sleeper and operate the vehicle, the SRS system must be deactivated by an authorized Peterbilt dealer.

https://truckmanualshub.com/

PART 6: DRIVER'S CHECKLIST

To keep your vehicle in top shape, and to maintain its high level of safety for you, your passengers, and your load, make a thorough inspection every day before you drive. You'll save maintenance time later -- and the safety checks could help prevent a serious accident. Please remember, too, that Federal law requires a pre-trip inspection and so do commercial trucking companies.

For more information, you can refer to Federal Motor Carrier Safety Regulation 392.7 which tells you that interstate commercial motor vehicles are not to be driven unless the driver is sure that certain parts and accessories are in working order.

You aren't expected to become a professional mechanic. The purpose of your inspections is to find anything that might interfere with the safe and efficient transportation of yourself and your load. If you do find something wrong and can't fix it yourself, please have a qualified mechanic fix it right away.

Safe Vehicle Operation

For your safety, as well as those around you, be a responsible driver:

- If you drink, do not drive.
- Do not drive if you are tired, ill, or under emotional stress.

Much has gone into the manufacturing of your Peterbilt, including advanced engineering techniques, rigid quality control, and demanding inspections. These manufacturing processes will be enhanced by you—the safe driver—who observes the following:

- knows & understands how to operate a vehicle and all its controls
- maintains the vehicle properly
- uses driving skills wisely

WARNING! Do not drink and drive. Your reflexes, perceptions, and judgment can be affected by even a small amount of alcohol. You could have a serious—or even fatal accident—if you drive after drinking. Please do not drink and drive or ride with a driver who has been drinking.
The use of alcohol, drugs, and certain medications will seriously impair perception, reactions, and driving ability. These circumstances can substantially increase the risk of an accident and personal injury.

https://truckmanualshub.com/

PART 6: DRIVER'S CHECKLIST

The daily checks listed below are the foundation of your overall preventive maintenance program. See PART 8: MAINTENANCE AND SERVICE for the complete preventive maintenance schedule for your vehicle.

Approaching the Vehicle

1. Check the overall appearance and condition. Are windows, mirrors, and lights clean and unobstructed?
2. Check beneath the vehicle. Are there signs of fuel, oil, or water leaks?
3. Check for damaged, loose, or missing parts. Are there parts showing signs of excessive wear or lack of lubrication? Have a qualified mechanic examine any questionable items and repair them without delay.

Checking Under the Hood or Cab

With the engine stopped:

1. Check the engine oil level; top up as necessary. Refer to your engine's operating manual for the type of oil to use.
2. Check the engine coolant level while the engine is cold. Top up as necessary with premixed coolant. Refer to the instructions on page 160 for adding coolant to the proper level.
3. Check the engine belts. Refer to the instructions on page 160 to check belt condition and adjust tension.
4. Check brake lines and hoses.
5. Check all other accessories, controls, belts, hoses, and wiring for condition and adjustment.
6. Check the windshield washer fluid level; top up as necessary (Conventional).
7. Check the power steering fluid reservoir; top up as necessary.
8. Check the steering components (pitman arm; draglink; power steering hoses, etc.)
9. Drain the fuel/water separator.

Checking the Luggage Compartment

1. Check the fire extinguisher charge.
2. Check the road emergency kit. Is it complete?
3. Check the windshield washer fluid level; Top up as necessary (COE).

https://truckmanualshub.com/

PART 6: DRIVER'S CHECKLIST

Checking Outside the Vehicle

WARNING!

- ***Diesel fuel in the presence of an ignition source (such as a cigarette) could cause an explosion. You could be seriously injured. A mixture of gasoline or alcohol with diesel fuel increases this risk of explosion. Use only the fuel recommended for your engine.***
- ***Hot fuel vapors are combustible and can cause an explosion or fire resulting in injury or death. Do not remove a fuel tank cap near an open flame.***

1. Be sure all wheel studs and cap nuts are secure. Check wheel cap nut torque weekly; refer to the instructions on page 152.
2. Check tires for condition and proper inflation.
3. Check the front wheel bearing lube level.
4. Check parking (spring) brakes as to the condition and tightness of air lines, breathers, clamp rings & bolts, mounting studs, and release bolts.
5. Check turn signal operation.
6. Check emergency flashers and exterior lamps.
7. Check the fuel tanks. Is there enough fuel? Are the tank caps secure?
8. Visually inspect the fuel tank mounting hardware. Are the tank straps tight? Is the webbing in place?
9. If equipped with fuel tank steps: are they damaged or broken? Is the grommet/windlace in place between the tank and side plate? Are bolts missing or loose?
10. Check the air cleaner and muffler(s). Are they tight and secure?
11. Check the trailer connections. Are they secure and the lines clear? If they are not being used, are they stored properly?
12. Is the trailer spare wheel secure? Inflated?
13. Is the landing gear up and the handle secured?
14. Check the 5th wheel. Is the kingpin locked?
15. Is the sliding 5th wheel locked?
16. Check for loose or missing suspension fasteners.
17. Check springs or other suspension parts for damage such as cracks, gouges, distortions, bulges, or chafing.
18. Check the air system. Are there leaks?

https://truckmanualshub.com/

19. Drain excess moisture from all air supply tanks. Make sure the drain cocks are closed. This procedure is also required for air supply tanks equipped with automatic drain valves.
20. Check that cab latch or hood hold-downs are hooked.

In - Cab Checklist

CAUTION: To avoid injury while entering or leaving the cab, keep your feet in contact with the steps and your hands on the handhold. Always have three points of contact as you enter or exit a cab. See PART 2: GETTING INTO AND OUT OF THE CAB AND FRAME ACCESS of this manual for more information.

1. Adjust the seats.
2. Fasten and adjust safety restraint belts. (See PART 5: SEAT AND RESTRAINT SYSTEMS or the Index, under Restraint Systems 63.)
3. Sleeper Restraints: Check and inspect condition. (See PART 5: SEAT AND RESTRAINT SYSTEMS or the Index, under Restraint Systems 63.)
4. Adjust the steering column.
5. Check mirror adjustment.
6. Operate air-powered devices to circulate lubricants.

After Engine Warmup

Check automatic transmission oil (if equipped).

*NOTE: The above items should be checked daily, as a **minimum.** They are **in addition to**, not **in place of** Federal Motor Carrier Safety Regulations. These may be purchased by writing to:*

Superintendent of Documents
U.S. Government Printing Office
Washington, DC 20402

https://truckmanualshub.com/

PART 7: STARTING & OPERATING THE VEHICLE

Since each vehicle is custom-equipped, all engine operation instructions in this manual are general. You will want to consult the manual for your engine to find out details about your specific engine's needs. You may need to use a slightly different procedure from the one outlined here.

Also check the ATA Truck Driver's Handbook in your glove box. It will give you tips on starting, shifting, and driving a truck.

Below are instructions for both normal-temperature starting and cold-weather starting.

Normal Temperature Starting Procedure

When the outside temperature is above 50° F (10° C), you can use the following procedure.

1. Set the parking brake.
2. Put your main transmission in Neutral.
3. Disengage (depress) the clutch (with manual transmission).
4. Turn the key switch to ON.

- If your vehicle is equipped with a digital message center (DMC), the DMC display will come on in the "Clock" mode.

CAUTION: Never operate the starter motor while the engine is running. The starter and flywheel gears could clash or jam, severely damaging them.

NOTE: Some starters are equipped with overcrank protection. Check the "Engine Operation and Maintenance Manual" for details.

5. Press the starter button.

If the engine does not start within 30 seconds, release the starter button. To avoid overtaxing the starter motor or the batteries, don't use the starter for more than 30 seconds. Let the starter motor cool and the batteries recover for two minutes before trying again.

If the engine still won't start after a couple of tries, check the manual override shutdown valve and fuel lines for possible fuel starvation or air leaks. Starting failure may mean fuel isn't reaching the injectors.

6. As soon as the engine starts, begin to watch the oil pressure gauge. Check your engine manufacturer's manual for the right pressure for your engine. If the oil pressure doesn't rise within a few seconds, stop the engine. Find out what is wrong before restarting the engine.

7. Slowly engage (release) the clutch after the engine has started.

https://truckmanualshub.com/

8. Wait until normal engine oil pressure registers on the gauge before idling or accelerating the engine beyond 1000 RPM.

NOTE: If your vehicle has a DDC engine, and if it has not been started for more than 30 days, squirt about half a cup (120 ml) of clean, specified engine oil into the turbocharger oil inlet port. Use an oil can. This will keep the turbocharger bearings lubricated until the engine oil pressure gets up to normal.

Cold Temperature Starting Procedure

In cold weather, fast engine starting helps relieve the loads on the electrical system and cranking motor. Using the special cold starting equipment will help starting. If you follow a few simple guidelines, you will extend the service life of your engine.

•Keep the electrical system in top condition.

•Use the best quality fuel of the recommended grade.

•Use recommended engine lubricating oil.

Ether Metering Equipment

WARNING! The fluid in ether starting systems is extremely flammable and poisonous. If ignited, it could burn you badly. If you swallow it, it can be harmful or fatal.

- ***Do not smoke when testing, installing, or servicing an ether starting unit. Service it in a well-ventilated area away from heat, open flames, or sparks.***
- ***If swallowed, do not induce vomiting. Call a physician immediately.***
- ***Wear goggles to avoid getting fluid in your eyes. Avoid getting it on your skin and avoid breathing the fumes. If fluid does get in your eyes or fumes irritate your eyes, flush for 15 minutes with large amounts of clean water. Contact an eye specialist.***
- ***Do not move or relocate the ether cylinder or tubing from its original installation. It must be mounted to protect it from engine exhaust heat and from moving parts which could damage it.***
- ***Do not store the spare cylinder in the cab.***
- ***In warm weather, when you will not need the ether starting system, remove the ether bottle from your truck and store it safely. Return the protective cap to the bottle mounting connector.***

https://truckmanualshub.com/

In cold weather the engine will start faster and the starter motor will work more easily if ether is injected into the engine cylinder while the engine is being cranked.

Automatic System

When you press your ignition starter button, the cranking motor and the ether system are engaged. When needed, starting fluid is released from a pressurized cylinder, flows through a valve and tubing, and sprays from a nozzle in you engine's air intake system.

Preheater With Glow Plug

If you have a Caterpillar 3306 PCTA or an earlier model engine, you may have a glow plug. The glow plug preheater aids cold starting by burning fuel in the intake manifold and heating the intake air. This feature can be very helpful if you operate your truck in cold weather.

For more helpful starting information, refer to the engine manual that came with your vehicle.

Engine Warmup

The purpose of engine warmup is to allow oil film to be established between pistons and liners, shafts and bearings while your engine gradually reaches operating temperature.

Warmup Procedure

1. After you've started your engine, idle it at approximately 600 RPM while you check
   - oil pressure
   - air pressure
   - alternator output
2. After a few minutes of idling at 600 RPM, increase your idle speed to 900 or 1000 RPM. Continue your warmup. This procedure allows oil to warm and flow freely while pistons, liners, shafts, and bearings expand slowly and evenly. In extremely cold temperatures, you may have to increase idle speed.

NOTE: In colder climates where the temperature is often below freezing, the warmup for turbocharged engines is especially important. Chilled external oil lines leading to the turbocharger will slow the oil flow until the oil warms, reducing oil available for the bearings. Watch the engine oil temperature or pressure gauge for a warming trend before increasing engine idle speed (RPM).

3. Continue the engine warmup until the coolant temperature reaches at least 130° F (54° C). At this temperature, you can use partial throttle. Wait until the coolant temperature is at least 160° F (71° C) before operating at full throttle.

https://truckmanualshub.com/

PART 7: STARTING & OPERATING THE VEHICLE

WARNING! Exhaust fumes from the engine contain carbon monoxide, a colorless and odorless gas. Do not breathe the engine exhaust gas. A poorly maintained, damaged or corroded exhaust system can allow carbon monoxide to enter the cab or sleeper. Entry of carbon monoxide into the cab is also possible from other vehicles nearby. Failure to properly maintain your vehicle could cause carbon monoxide to enter the cab/sleeper and causes serious illness.

CAUTION: Never idle your vehicle for prolonged periods of time if you sense that exhaust fumes are entering the cab or sleeper. Investigate the cause of the fumes and correct it as soon as possible. If the vehicle must be driven under these conditions, drive only with the windows slightly open. Failure to repair the source of the exhaust fumes may lead to personal harm.

NOTE: Keep the engine exhaust system and the vehicle's cab/sleeper ventilation system properly maintained. It is recommended that the vehicle's exhaust system and cab/sleeper be inspected

- *By a competent technician every 15,000 miles*
- *Whenever a change is noticed in the sound of the exhaust system*
- *Whenever the exhaust system, underbody, cab or sleeper is damaged*

NOTE: Do not stay in the vehicle with the engine running or idling for more than 10 minutes with the vehicle's Heater and A/C ventilation system in RECIRC or at LOW FAN SPEED. Even with the ventilation system On, running the engine while parked or stopped for prolonged periods of time is not recommended.

NOTE: If other vehicles are parked next to you idling, move your vehicle or do not stay in your vehicle for prolonged periods of time.

CAUTION: The use of a winterfront can result in excessive engine coolant, oil, and charge air (intake) temperatures, which can lead to overheating and possible engine damage. If you must use a winterfront, refer to the "Engine Operation and Maintenance Manual" for operating restrictions and recommendations.

https://truckmanualshub.com/

Transmission Warmup

COE Only

WARNING! Do not operate this vehicle if you notice a gradual or sudden increase in cable shift effort or a decrease in the usable travel. Take the vehicle to the nearest authorized Peterbilt dealer for repair. Failure to correct either of these conditions could result in serious injury or death.

CAUTION: Cables are designed to be contaminant resistant, not contaminant proof. Protect cable from contaminants, chemicals, and physical damage which may damage the control cable.

NOTE: Shift control cables are lubricated for life and are non-repairable. The cables cannot be lubricated and/or repaired. If you detect a broken seal, moisture, or if the cable has frozen, the shift cable must be replaced. Do not apply heat to thaw or improve performance of the cables.

In cold weather you may find shifting sluggish when you first start the engine. Transmission warmup is especially important at this time, but it is always a good idea to warm up your transmission before starting out on the road. To warm up the transmission lubricating oil during engine warmup, with a single transmission:

- Check that the transmission is in Neutral.
- Release the clutch pedal.

If you have a two-transmission combination:

- Put the main transmission in gear.
- Put the auxiliary transmission in Neutral. This will allow the transmission countershaft to turn, agitating the oil and warming it.

Idling the Engine

Under most circumstances, idling your engine for long periods merely wastes fuel. In severe arctic weather conditions, however, you may need longer idling to be sure all parts of your engine are fully lubricated.

WARNING! To reduce the chance of personal injury and/or vehicle damage from overheated engines, which can result in a fire, never leave the engine idling without an alert driver present. If the engine should overheat, as indicated by the engine coolant temperature light, immediate action is required to correct the condition. Continued unattended operation of the engine, even for a short time, may result in serious engine damage or a fire.

https://truckmanualshub.com/

CAUTION: Do not allow your engine to idle, at low rpm's (400–600 rpm), longer than five minutes. Long periods of idling after the engine has reached operating temperatures can decrease engine temperature and cause gummed piston rings, clogged injectors, and possible engine damage from lack of lubrication. The normal torsional vibrations generated can also cause transmission wear.

During the time it takes you to drink a cup of coffee, your engine can cool as much as 60° F (33° C) below normal operating temperature. To keep the engine warm during a short break, turn it off. And don't allow your engine to idle longer than five minutes.

Putting The Vehicle In Motion

This section discusses the clutch and transmission operation to get your Peterbilt underway.

WARNING! Do not carry loose objects in your cab, it can be dangerous. In a sudden stop, or even going over a bump in the road, they could fly through the air and strike you or a passenger. You could be injured or even killed. Secure all loose objects in the cab before moving the vehicle.

Shifting The Transmission

You will find a shift pattern either on a decal in your cab or on a medallion in the shift knob. Check to be sure you know the correct sequence for your particular transmission. Refer to the transmission manual included with your vehicle for complete instructions in the operation of your transmission.

Shifting Gears in a New Vehicle

Shift carefully in a new vehicle. The transmission may be a little stiff at first. So be careful to avoid gear clashing.

When you are operating a new vehicle or one that has been exposed to cold weather, you want the transmission lubricant to circulate and coat the contacting surfaces of the gears. Metal contacting metal in moving parts may seriously damage your transmission. So don't drive in one gear for long until the transmission lubricant has had a chance to coat those contacting surfaces.

Operating the Clutch

"Riding" the Clutch

The clutch pedal is not a footrest. Driving with your foot on the clutch pedal will allow your clutch to slip, causing excessive heat and wear. You can damage your vehicle this way.

https://truckmanualshub.com/

Clutch Travel

CAUTION: Always use first gear or a low speed range to start the vehicle in motion. The use of a higher gear or speed range forces undue strain on the engine, clutch, other transmission components, and may cause damage.

To put your vehicle into motion, push down on the clutch pedal until the clutch brake makes contact. This contact will occur at about 1/2 inch to 1 inch from the end of pedal stroke. Select a gear low enough to let your vehicle start forward with the throttle at idle until the clutch is fully engaged.

The total stroke of the clutch pedal is about 10 inches. The first 1 3/4 to 2 inches is free travel. After that is the release stroke, the part that fully releases the clutch. The last 1/2 to 1 inch engages the clutch brake. If your vehicle is new, watch the free travel in your clutch carefully for the first few hundred miles. As your clutch lining wears and high spots get worn smooth, you will get less free travel.

Always start out in a low gear with a ceramic-faced clutch. Starting in higher gears, even with a light load, will cause a very jumpy start and excessive wear.

And don't allow your vehicle to roll in the opposite direction at all during clutch engagement. If you need to start up on an incline, apply your service brakes before you release the parking brake. Then release your service brakes as you engage the clutch and apply throttle.

Release Bearing Wear

When you must idle your engine for any period of time, shift your transmission to neutral and engage the clutch (take your foot off the pedal). This helps prevent unnecessary wear of your clutch release bearing. And it is less tiring for you, too.

Clutch Adjustment

Inspect manual and self-adjusting clutches regularly to maintain correct clutch adjustment. Have your dealer's service department perform any adjustments necessary. Do not adjust your clutch by adjusting the external linkage without first checking (and correcting if necessary) the internal clutch adjustment. Using only the external linkage adjustment could damage the clutch.

Clutch Brake

Your clutch brake is used for stopping gear rotation to let you shift into 1st gear or reverse when your vehicle is at a standstill.

About the last 1/2 to 1 inch of clutch pedal travel activates your clutch brake. So if you are stopped and want to shift directly into 1st or reverse, depress the clutch pedal until contact with the clutch brake is made to stop transmission gear rotation.

https://truckmanualshub.com/

If you have a butt-tooth condition and can't shift the transmission, gradually release the clutch. Then the drive gear can roll enough to allow the teeth to line up properly and complete the shift.

CAUTION: Be careful not to apply the clutch brake while the vehicle is moving. The purpose of the clutch brake is to stop the transmission so that you can shift into a starting gear without grinding. Applying the clutch brake when the vehicle is moving causes a braking effect on the entire vehicle. This wear naturally shortens the service life of your clutch brake.

Double Clutching

Whether you are upshifting or down shifting, it is best to double clutch. Double clutching is easier on your transmission and on your engine, helping your vehicle match engine speed with driveline speed and achieving clash-free shifts. To double clutch:

1. Push down the clutch pedal to disengage the clutch.
2. Move the gear shift lever to neutral.
3. Release the pedal to engage the clutch. This lets you control the RPM of the mainshaft gears. Thus you can match the RPM of the mainshaft gears to those of the output shaft.

   Upshifts - Let the engine and gears slowdown to the RPM required for the next gear. Use the tachometer to determine optimum RPM for gear engagement.

   Downshifts - Press accelerator to increase engine and gear speed to the RPM required in the lower gear. Use the tachometer to determine optimum RPM for gear engagement.
4. Now quickly press the pedal to disengage the clutch. Move the gear shift lever to the next gear speed position.
5. Release the pedal to engage the clutch.

Interaxle Differential

On vehicles with tandem rear axles, the interaxle differential allows each axle to turn independently. Differential action between the tandems relieves stress on the rear axles and tires and provides better performance.

https://truckmanualshub.com/

When operating normally on paved, dry surfaces, keep your truck's interaxle differential in the UNLOCK position.

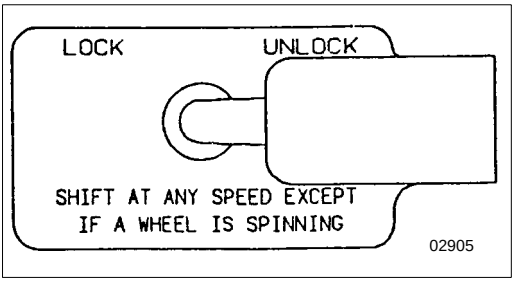

Switch In Unlock Position

In the LOCK position, continuous operation on a paved, dry surface stresses the tandem axles, possibly causing internal damage to them.

Shift into the LOCK position to operate on slippery surfaces like

- Ice or snow - with or without tire chains.
- Dirt roads.
- Loose sand, mud, or other off-road conditions.

Switch into LOCK when checking performance on a chassis dynamometer.

WARNING! Do not put the differential lock in the LOCK position while the wheels are spinning freely (slipping), you could lose control of the vehicle or cause axle damage—you could be injured. Switch to LOCK only when the wheels are not spinning.

WARNING! Do not operate the vehicle on dry pavement with the differential locked; it could lead to an injury accident. On dry pavement, you will not be able to steer well with the differential locked. Lock the differential only when operating on surfaces with poor traction, such as wet, slippery roads or loose gravel.

WARNING! Do not use the differential lock during downhill operation or at speeds above 25 mph (40 km/h). When it is engaged under these conditions, your vehicle will exhibit "understeer" handling characteristics. This "understeer" condition will cause your vehicle to not turn as quickly and more steering effort will be required, which can cause an injury accident.

To reduce load on the drive train, ease up on the throttle pedal whenever you shift into LOCK or UNLOCK.

https://truckmanualshub.com/

Dual Range (Two Speed) Axles

If you have this option, dual range axles provide two rear axle ratios for operating under heavy loads or off-highway as well as for over the road trucking. The Low range provides maximum torque for off-road work. The High range is a faster ratio for highway speeds and conditions. A switch on your instrument panel controls this function. You will notice that it has a guard to protect you from activating it accidentally.

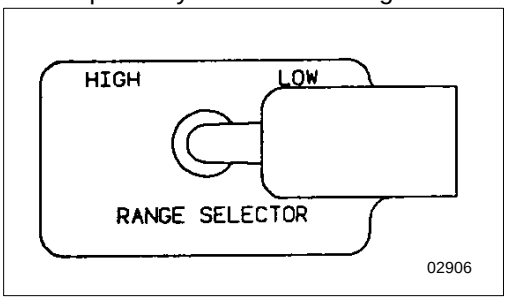

Range Selector

Here's how to use your dual range axle:

WARNING! Never shift the axle when moving down hill. Engine driveline disengagement may occur, eliminating engine retardation and allowing the wheels to spin faster than the current speed of the engine. This may require severe braking to slow the vehicle down and can result in an injury accident.

1. Unlock the interaxle differential before starting.
2. Put the Range Selector in the LOW range. Shift the transmission to start the truck moving.
3. Off-Highway: When you are driving on rough terrain and secondary roads, or under a very heavy load, keep the axle in the LOW range. Shift your transmission to maintain the road speed you want.
4. When you go from off-highway to highway driving, shift the axle to the HIGH range this way:

- Be sure the differential is UNLOCKED.
- Keep the accelerator down and move the Range Selector lever to HIGH.
- Keep driving with the accelerator down until you want the axle to shift.
- Then release the accelerator until the axle has shifted.
- You are now in the HIGH axle range on the highway. Shift the transmission normally to reach your desired cruising speed.

https://truckmanualshub.com/

5. If you need to downshift the axle for more power:

- Keep the accelerator down & move the Range Selector lever to LOW.
- Keep driving with the accelerator down until you want to downshift the axle.
- Then release and depress the accelerator pedal quickly to increase the engine RPM.
- The axle will shift to the LOW range.

Important Tips on Operating Your Dual Range Axle

NOTE: If your vehicle has an automatic transmission, it may be necessary to shift it to the Neutral position momentarily to allow the main differential lock splines to fully engage or disengage.

- To avoid damaging your vehicle, shift the axle at a slower speed until you are used to driving with the dual range axle.

When driving on a surface with good traction, keep the interaxle differential unlocked. You can drive with the axle in LOW or HIGH range.

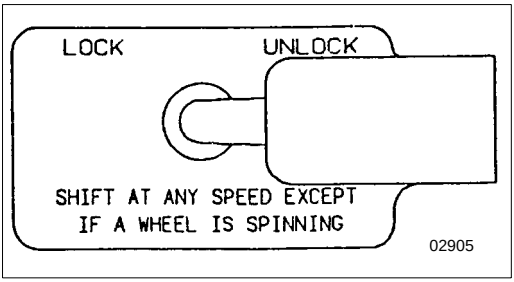

Interaxle In Unlock

- When you are driving with poor traction, lock the differential. When you have the differential locked, drive with the axle in LOW range only.

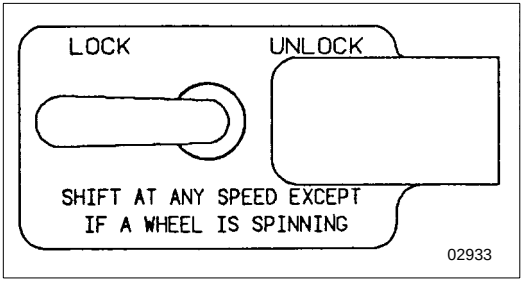

Interaxle In Lock

- Always UNLOCK the interaxle differential before shifting the axle speed range.

https://truckmanualshub.com/

CAUTION: If you shift the axle range with the interaxle differential in LOCK, you could do serious damage to your axles. Never shift the axle range with the differential locked.

- Park the truck with the Range Selector in LOW.

Automatic and Automated Transmissions

An automatic or automated transmission makes shifting much easier, of course. But because your truck pulls a heavy load, if you have such a transmission, it is important to use it efficiently. For correct operation, see the manual for your automatic or automated transmission included with your vehicle.

WARNING! If your vehicle has a Freedomline™ transmission, be aware that it can roll backwards when stopped on a hill or grade, or when starting from a stop on a hill or grade. This could cause serious damage or personal injury. Observe the following guidelines:
•When stopped on a hill or grade, press the brake pedal.
•When starting from a stop on a hill or grade, quickly remove your foot from the brake pedal and firmly press on the accelerator pedal.

There is no “park” position. So you will need to apply the parking brake before leaving the cab.

WARNING! Do not leave the cab without applying the parking brake. The truck could roll and cause an injury accident. Always apply the parking brake before you leave the cab.

Transmission Retarder

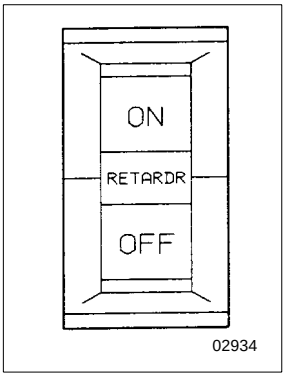

Retarder Switch

If you have this option, it will act like a brake to slow your vehicle without using the brakes. Take your foot off the throttle and operate the retarder switch. When you do not need full retarder effect, you can

https://truckmanualshub.com/

apply it intermittently (off and on) to cause gradual or partial slowing. Continuous application of your retarder will cause your hydraulic fluid to get hotter. Intermittent application will help prevent overheating.

WARNING! Relying completely on your automatic transmission hydraulic retarder is dangerous. If your engine shuts down, your retarder will not operate. If you are going fast, or going downhill at any speed, you could lose control and have a serious accident. When you are using your retarder, be ready in an emergency to apply your service brakes suddenly.

Auxiliary Transmission

If you have an auxiliary transmission, see your transmission manufacturer's manual for its proper operation.

If Your Vehicle Must Be Towed

CAUTION: Remove the driveline and axle shafts or lift the driving wheels off the ground before towing the vehicle. You could seriously damage your vehicle by towing it with the driveline connected and the drive wheels on the ground. Worse, when vehicles are towed either by wrecker or piggy-back, the lubricant in the top front of the drive axle will drain to the rear. This will leave the top components dry. The resulting friction will seriously damage them. Always remove the main driveshaft and axle shafts before towing your vehicle.

Returning a Towed Vehicle to Service

You will have to add lubricant to prevent damage after your vehicle has been towed.

1. Into the pinion cage, add 1 pint (.47 liter) of lubricant, OR

   Into the inter-axle differential, add 2 pints (.94 liter) of lubricant.

   See the Index, under Lubricant Specifications, for the lubricant required by each axle.
2. After adding the specified type and amount of lubricant, drive the vehicle. It should be unloaded. Drive 1 to 2 miles (1.5 to 3 km) at a speed lower than 25 mph (40 km/h).

This will thoroughly circulate the lubricant through the assembly.

Anti-Lock Braking System Operating Information

This vehicle may be equipped with an anti-lock braking system (ABS). This ABS reduces the possibility of wheel lock-up. If a wheel is about to lock during braking, the ABS will automatically adjust air pressure to the brake chambers on the appropriate wheel(s) to prevent wheel lock-up. The ABS is automatically turned on when the ignition switch is turned on.

https://truckmanualshub.com/

WARNING! The brake system is a critical vehicle safety system. For the safety of you and others around you, have the vehicle submitted for periodic preventive maintenance checks as well as having any suspected problems immediately checked by an Authorized Service Center. Failure to properly maintain your brake system can lead to serious injury accidents.

WARNING! Do not drive through water deep enough to wet brake components, as it may cause the brakes to work less efficiently than normal. The vehicle's stopping distance may be longer than expected, and the vehicle may pull to the left or right when brakes are applied, which could contribute to an accident.

WARNING! Do not rely on an anti-lock brake system that is functioning improperly. You could lose control of the vehicle resulting in a severe accident and personal injury. If any ABS lamp goes on while you are driving or stays on after the self-check, that anti-lock system might not be working. That ABS may not function in an emergency. You will still have conventional brakes, but not anti-lock brakes. If any warning lamp indicates a problem, have that ABS checked.

ABS Warning Lamps

Truck/Tractor ABS Warning Lamp

A truck/tractor ABS warning lamp illuminates when the ignition switch is first turned on and will remain on until the system self-test has been completed successfully. Normally, this ABS lamp will remain on until a speed of no more than 9 mph has been reached and the speed sensors have been checked for correct output. The lamp should remain off after this point unless a failure in the system is detected. The truck/tractor ABS lamp is located in the warning lamp cluster (see page 53 and page 54).

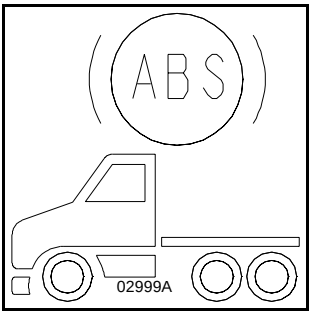

https://truckmanualshub.com/

CAUTION: If the truck/tractor ABS warning lamp does not illuminate when the ignition is first turned on, there is a problem with the bulb or wiring. The driver should have this checked as soon as possible.

Trailer ABS Warning Lamp

Trucks, tractors, and trailers built on and after March 1, 2001 are equipped with power line communication (PLC) per U.S. FMVSS 121, including a trailer ABS warning lamp in the cab (see page 53 and page 54):

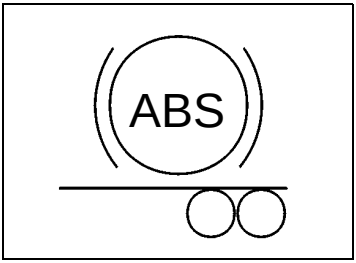

CAUTION: If the trailer ABS warning lamp does not illuminate when the ignition is first turned on, there is a problem with the bulb or wiring. The driver should have this checked as soon as possible.

NOTE: A successsful warning lamp illumination and bulb check at ignition on does not indicate that the trailer you may be connected to has trailer ABS. You should personally inspect every trailer to determine its braking system.

A trailer ABS warning lamp will illuminate for a bulb check when the ignition switch is first turned on - whether or not a trailer is connected to the vehicle. If the bulb check is satisfactory, the lamp will next do either of the following:

1. If no trailer is connected, or if a non-ABS-equipped trailer is connected, the trailer ABS lamp will go off after a few seconds.

NOTES:

- *A "properly connected" ABS-equipped trailer is*
  -a trailer with PLC hooked up to the J560 connector
  -a trailer without PLC that is hooked up to an optional ISO 3731 connector
- *For doubles or triples: PLC does not distinguish between trailers. An ABS problem in any trailer will activate the trailer ABS warning lamp.*

https://truckmanualshub.com/

2. If an ABS-equipped trailer is properly connected, the trailer ABS warning lamp will remain illuminated for a few more seconds while the trailer ABS is tested.

- If no trailer ABS problems are detected, the lamp will go off.
- If a trailer ABS problem is detected, the lamp will remain on. The driver should have the trailer's ABS problem corrected before the vehicle is driven with that trailer attached.

Wheel Spin Control Warning Lamp

Your truck/tractor ABS may have an acceleration slip regulation (ASR) or automatic traction control (ATC) feature. Either of these features is monitored by a wheel spin control warning lamp. In conventional models this lamp is located in the warning lamp cluster (see page 53). In COE models, this lamp is located on the main dash:

The Wheel Spin Control warning lamp will briefly illuminate and then go out when the ignition switch is first turned on. The Wheel Spin Control warning lamp will illuminate whenever the ASR or ATC system detects drive wheel spin. The lamp will remain illuminated as long as wheel spin is detected and the ASR or ATC system is applying the drive wheel brakes or reducing engine torque. Do not allow the Wheel Spin Control lamp to remain on continuously for an extended length of time. Extended continuous use of the ASR / ATC can cause overheating of the drive wheel brakes. Engine torque or vehicle speed should be reduced to eliminate wheel spin and prevent excessive application of the ASR/ATC system. Except for checking for proper illumination of the ABS and Wheel Spin Control warning lamps when first starting the vehicle, and for monitoring these lamps while driving, no special operating procedures are required. For detailed system description, see service literature for your specific ABS that was provided with your vehicle.

Digital Message Center

If so equipped, the digital message center (DMC) in a vehicle will detect faults during operations. When a new fault is detected, a LED next to the DIAG key on the DMC's keypad will illuminate. All faults are either active or inactive (active faults are conditions that still exist).

https://truckmanualshub.com/

- Active faults cannot be erased until they become inactive. They should be investigated as soon as possible.
- Inactive faults can be erased by using the CANCEL key on the DMC.

Refer to your DMC operator's manual for more information.

Bobtail Brake Proportioning System

NOTE: The following information is applicable only to tractor configurations built on or after March 1, 1997 and not registered in the United States.

Peterbilt tractors without anti-lock brake systems (ABS) are typically equipped with a bobtail brake proportioning system. When a trailer is not connected, the drive axle brake application pressure will automatically be limited by the proportioning system. When driven in a bobtail mode, these tractors will require greater brake pedal application to provide the equivalent braking to a bobtail tractor not equipped with a proportioning system.

WARNING! Because of the increased use of the steer axle brakes when driving bobtail, always ensure the steer axle brakes are functioning and properly adjusted. Failure to do so can lead to decreased braking ability, longer stopping distances, loss of vehicle control, and can cause an accident.

Brake Safety and Emergency

WARNING! Do not operate the vehicle in the event of a malfunction in any air circuit. The vehicle should not be operated until the system is repaired and both braking circuits, including all pneumatic and mechanical components, are working properly. Loss of system air can cause the service brakes not to function resulting in the sudden application of the spring brakes causing wheel lock-up, loss of control, or overtake by following vehicles. You could be in an accident and severely injured.

WARNING! Unless you have an anti-lock braking system, always avoid completely depressing the service brake pedal, if possible, even during emergency braking. Depressing the brake pedal too aggressively can cause the wheels to lock, which can lead to an uncontrolled skid and could cause an accident.

To stop your vehicle in an emergency, vary the service brake application pressure to provide maximum braking force without locking the wheels. Use engine compression to assist the service brakes; i.e., don't depress the clutch pedal until the engine reaches idle speed.

https://truckmanualshub.com/

Overheated Brakes

Under normal braking conditions, the energy generated will bring the internal brake drum temperature to about 500° F (260° C). This is well within the safe zone: The maximum safe temperature of linings for drum type brakes is usually about 800° F (427° C).

But if service brakes are used improperly or for prolonged periods, internal brake drum temperatures may commonly exceed 800° F (427° C). Such brake overheating may be detected by a burning smell or smoke coming from a drum. If this occurs, you should immediately stop and check for cracked brake drums or lining fires. If neither exists, get back behind the wheel and resume a slow speed as soon as possible to cool the brakes.

Parking Brakes and Their Use

The yellow diamond-shaped knob on your instrument panel controls your parking brakes. These are spring brakes which you activate by releasing air pressure from their chambers. When they are not in use, air pressure compresses the springs and releases the brakes. But putting the valve in the Park position exhausts air from the chambers and allows the springs to extend and apply the brakes. Also, if your system air drops below the safe operating level, the spring brakes will apply automatically, bringing your vehicle to a stop.

WARNING! On trailers built before March 1975 you may not have parking brakes if the trailer reservoir pressure leaks down. If you depend on them to hold your vehicle, they could release, causing a serious accident. These older trailers have emergency brakes not designed for parking. They will apply only if there is enough trailer reservoir pressure. Don't use your trailer emergency brakes for parking. Apply your tractor parking valve too.

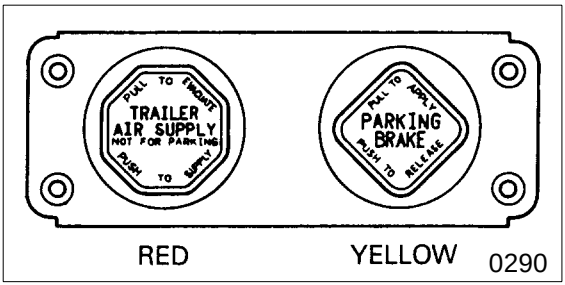

Red / Yellow Controls

https://truckmanualshub.com/

WARNING! Do not leave the cab without applying the parking brake. The truck could roll and cause an injury accident. Always apply the parking brake before you leave the cab.

WARNING! Stopping with the parking brake controls can cause a sudden wheel lock-up, loss of control, or can cause you to be overtaken by following vehicles. You could be severely injured. Never pull out the parking brake valve while the vehicle is moving.

WARNING! Do not use the trailer hand brake or service brakes to park and hold an unattended vehicle—use the parking brakes. Because service brakes work with air pressure, these brakes could slowly release. Your vehicle could roll, causing a serious accident. Someone could be hurt or killed. Never rely on the service brakes to hold a parked vehicle.

WARNING! Never drive your vehicle with the parking brake applied. Always release the parking brakes prior to moving the vehicle. Failure to disengage the parking brakes prior to moving your vehicle could result in excessive heat build-up in the brake system, resulting in a fire.

NOTE: Today's diesel electronic engines have significant torque and startability power at low RPM. Combinations of engine speed and available torque may over-power the vehicle's parking brakes.

To apply all your parking brakes, pull the yellow knob Out. The parking brakes will set. And the trailer air supply valve (red octagon knob) will automatically pop out, releasing air pressure and setting the trailer brakes.

CAUTION: Do not try to put the vehicle in motion before pressure in the system reaches 100 psi (689 kPa) because the wheels are locked by the spring brake action. Unnecessary stress and possible brake malfunction could occur if the vehicle is forced to move before the air system reaches 100 psi (689 kPa).

To release your truck or tractor brakes ONLY, push in the yellow knob. Your trailer will remain parked.

- To release the trailer brakes ONLY, push in the red knob. The truck or tractor will remain parked.
- To release the full combination of brakes, push in BOTH yellow and red knobs.

https://truckmanualshub.com/

Trailer Air Supply Valve

The red octagon knob controls the air supply to the trailer.

To supply air to the trailer system and release the trailer parking brakes:

- Allow the tractor air system pressure to build up to operating level.
- Push the red knob in.
- Hold the red knob in by hand until the trailer air pressure builds to a pre-set level, about 45 psi. At this point it will remain in.

The yellow knob will remain out; the tractor will remain parked. If you ever have a failure or disconnect of the air supply hose to the trailer, the trailer parking brakes will set. The red knob will automatically pop out and seal off the tractor air reservoirs to protect the tractor air system pressure.

When operating the tractor “bobtail”: The red knob must remain out to protect the tractor air system pressure

Manually Releasing Spring Brakes

You may sometime have to release your vehicle’s spring brakes by hand to allow the vehicle to be towed. This could happen if the system air pressure doesn’t reach operating pressure because your engine or compressor is not working properly. You will have to release the spring brakes at the spring brake chambers.

WARNING! Do not operate a vehicle when the spring brakes have been released manually. Driving a vehicle that has had its spring brakes manually released is extremely dangerous. You would probably have no brakes at all. You could have a serious or fatal accident.

WARNING! Releasing the spring brakes on an unsecured vehicle could lead to an accident. The truck could roll, causing severe injury. Always secure the truck with wheel chocks, chains, or other safe means to prevent rolling before manually releasing the spring brakes.

NOTE: The primary purpose of the manual release feature is to permit the vehicle to be towed to a repair facility.

https://truckmanualshub.com/

To release spring brakes manually:

1. Remove the cap from the spring chamber.

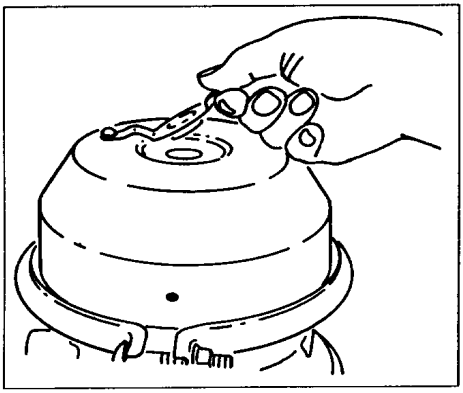

2. Remove the release stud assembly from the side pocket; remove the release nut and washer from the release stud.

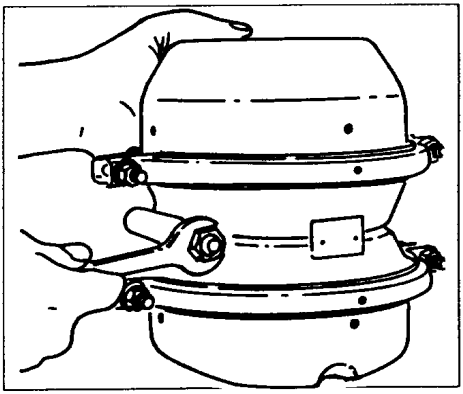

3. Slide out the release stud.

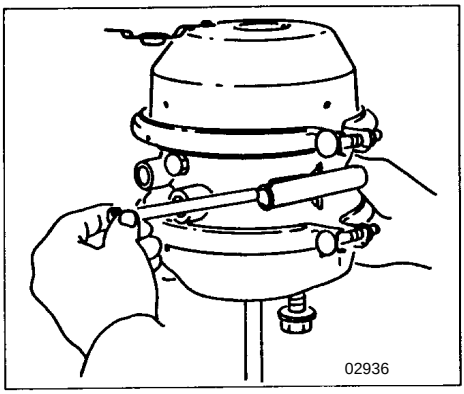

https://truckmanualshub.com/

4. Insert the release stud through the opening in the spring chamber where the cap was removed. Insert it into the pressure plate. Turn the release stud 1/4-turn clockwise in the pressure plate. This secures the cross pin into the cross pin area of the pressure plate and locks it into the manual release position.

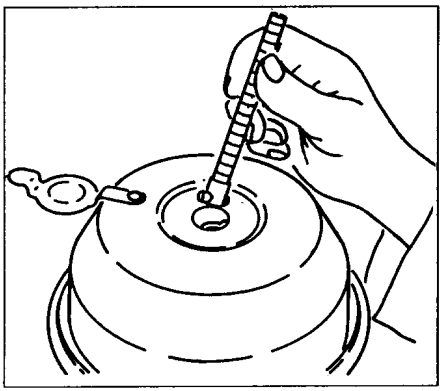

5. Assemble the release stud washer and nut on the release stud.

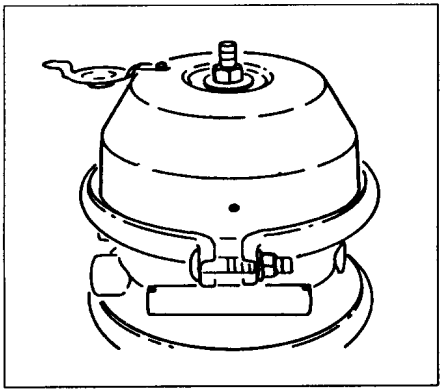

6. With a wrench, turn the release stud assembly nut until the compression spring is 90% - 95% caged. While doing this, check to make sure the push rod (adapter push rod or service push rod) is retracting. Do not over-torque the release stud assembly. (S-Cam type maximum 50 ft.-lb, Wedge type maximum 30 ft.-lb.) The spring brake is now mechanically released.

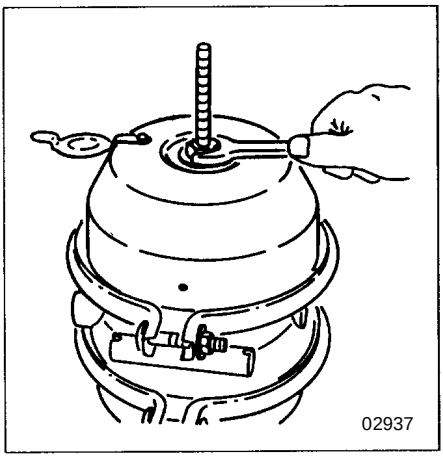

https://truckmanualshub.com/

WARNING! Disassembling the spring brake chamber is dangerous and could cause serious injury. These chambers contain a powerful spring that is compressed. Sudden release of this spring could cause you to be badly injured. Do not disassemble a spring brake chamber.

Retarders

Various retarders are available which function against the engine, driveline, or transmission. These are devices that use your engine's power to slow down your vehicle. They save wear and tear on your service brakes and can be a safety feature, too, because they can keep your brakes from overheating.

Ideally, you should always slow your vehicle with your retarder (where permitted by law) and use your service brakes only for stopping completely. Operating this way will greatly prolong the life of your brakes.

WARNING! In an emergency, the retarder might not stop you fast enough to prevent an accident. You could be badly hurt if you relied only on your retarder. Use the service brakes for quick stops. The retarder is not an emergency brake.

WARNING! The retarder is NOT intended as the primary brake for the vehicle, nor is it an emergency brake. The retarder only helps the service brakes by using pressure to slow the drivetrain. Use the service brakes for quick stops.

WARNING! The service brakes must be used in an emergency. The retarder alone might not stop you fast enough to prevent an accident. You could be badly hurt if you relied only on the retarder.

WARNING! Do not use the retarder when operating on road surfaces with poor traction (such as wet, icy, or snow covered roads or gravel). Retarders can cause the wheels to skid on a slippery surface. You could lose control of the vehicle if the wheels begin to skid, resulting in an accident.

https://truckmanualshub.com/

Driving Bobtail or with an Unloaded Trailer

We recommend that you do not use your engine retarder to slow down when you are bobtailing or pulling an empty trailer.

WARNING! Using an engine retarder can cause a wheel lockup. The trailer is not loading the tires enough to give the traction you may need. When you are bobtail or unloaded, you can have a serious accident if your wheels lock suddenly during braking. You could be injured. Don't use your retarder when you are driving bobtail or with an unloaded trailer.

Pyrometer

Maintaining Correct Operating Temperature

The optional pyrometer indicates engine exhaust gas temperature. Because it responds almost immediately to changes in exhaust temperature, the pyrometer is an excellent indicator of engine output.

If you watch engine speed and exhaust temperature ranges, the pyrometer can help you operate your truck more efficiently and avoid sudden changes in engine operating temperature.

CAUTION: Do not allow the pyrometer reading to exceed the specified maximum operating temperature. If the pyrometer has no label specifying the maximum operating temperature for the pyrometer, contact your engine distributor for a recommendation.

NOTE: Different size injectors or changes in altitude may affect engine operating and exhaust temperatures.

Procedure For Reducing High Pyrometer Temperature Readings

1. If the pyrometer indicates excessive temperature, ease up slightly on the throttle.
2. If RPM and speed drop, downshift one gear to help lower the exhaust temperature.
3. Observe the pyrometer reading. If the temperature continues to be high, continue downshifting until acceptable operating temperatures can be maintained.

https://truckmanualshub.com/

Stopping The Engine

Before Stopping The Engine

A hot engine stores a great amount of heat. And it doesn't cool down immediately after you shut it off. Always cool your engine down before shutting it off. You will greatly increase its service life.

Idle the engine at 1000 RPM for five minutes. Then low idle for thirty seconds before shutdown. This will allow circulating coolant and lubricating oil to carry away heat from the cylinder head, valves, pistons, cylinder liners, turbocharger, and bearings. This way you can prevent serious engine damage that may result from uneven cooling.

Turbochargers

This cooling-down practice is especially important on a turbocharged engine. The turbocharger contains bearings and seals that are subjected to hot exhaust gases. While the engine is operating, heat is carried away by circulating oil. If you stop the engine suddenly after a hard run, the temperature of the turbocharger could rise as much as 100°F (55°C) above the temperature reached during operation. A sudden rise in temperature like this could cause the bearings to seize or the oil seals to loosen.

Refuel Before the Final Stop

Air space in your fuel tanks allows water to condense there. To prevent this condensation while you are stopped, fill your tanks to 95% of capacity.

Final Stop

To make sure your vehicle is ready to go after a long stop (such as over night), please follow the suggestions below. Your vehicle will be easier to get going when you are ready, and it will be safer for anyone who might be around it.

Please remember, too, that in some states it is illegal to leave the engine running and the vehicle unattended.

Final Stopping Procedures

1. Set the parking brake before leaving the driver's seat.

   To hold your vehicle while it is parked, don't rely on

   •Air Brakes

   •Hand Control Valve for Trailer Brakes

   •Engine Compression

https://truckmanualshub.com/

WARNING! Using the trailer hand brake or air brakes to hold a parked vehicle is dangerous. Because they work with air pressure, these brakes could come loose. Your vehicle could roll, causing a serious accident. Someone could be hurt or killed. Always set the parking brakes. Never rely on the trailer hand brake or truck air brakes to hold a parked vehicle.

2. If you are parked on a steep grade, block the wheels.

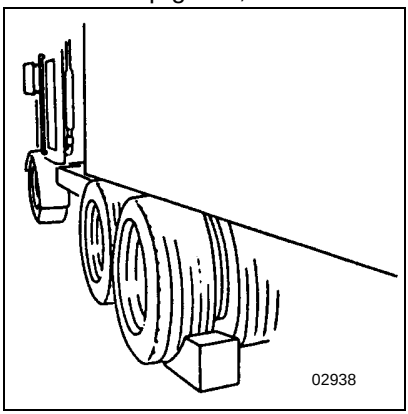

Blocked Wheels

3. Drain water from the air reservoirs.

   While the engine and air supply system are still warm, drain moisture from the air reservoirs. Open the reservoir drains just enough to drain the moisture. Don't deplete the entire air supply. Be sure to close the drains before leaving the vehicle.

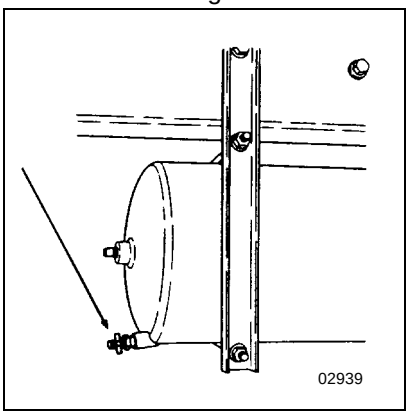

Opening Drains

4. Secure the vehicle. Close all the windows and lock all the doors.

https://truckmanualshub.com/

Setting Ride Height

Vehicles equipped with rear air suspensions have their ride height and axle (pinion) angle(s) preset at the factory. These are precision settings and should not be altered. Incorrectly adjusted ride height may result in improper interaxle U-joint working angles. This can result in premature driveline wear and driveline vibration. If your vehicle is equipped with a Peterbilt rear air suspension, and if it becomes necessary to reset the ride height, you may temporarily set it by following the next procedure. Proper ride height measurement and values are shown in the illustration and table below.

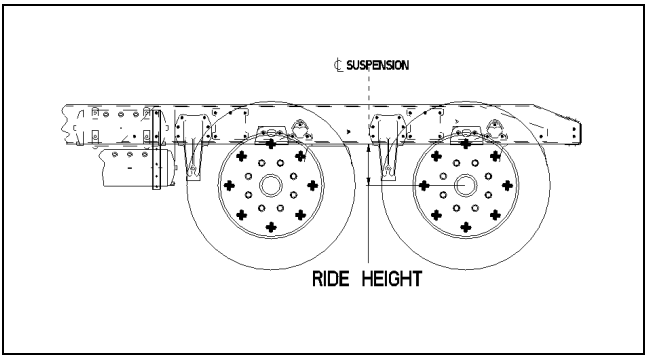

Ride Height Measurement (Location for Tandem Axles Shown)

Proprietary Rear Air Suspension	Ride Height [inches (mm)]*	
	Single Drive	Tandem Drive
Air Leaf	N/A	11.70 (297)
Air Trac	11.00 (279)	11.00 (279)
Low Air Leaf	8.50 (216)	8.50 (216)
Low Low Air Leaf	N/A	6.50 (165)
FLEX Air	N/A	8.50 (216)
*These values are for a fully laden vehicle		

Follow this procedure to temporarily set ride height.

WARNING! To prevent possible injury and damage to property, ensure that a vehicle is parked and the wheels chocked before beginning this procedure.

CAUTION: Completing this procedure will enable you to safely reach the nearest authorized Peterbilt repair facility to have ride height and pinion angle reset using the proper equipment and technique. Do this as soon as possible to avoid potential driveline damage.

NOTE: Suitable wheel chocks are at a minimum an 18-inch (46 cm) long 4x4.

1. Ensure that the air supply and delivery plumbing of the height control valve is consistent with the illustration on the next page.

https://truckmanualshub.com/

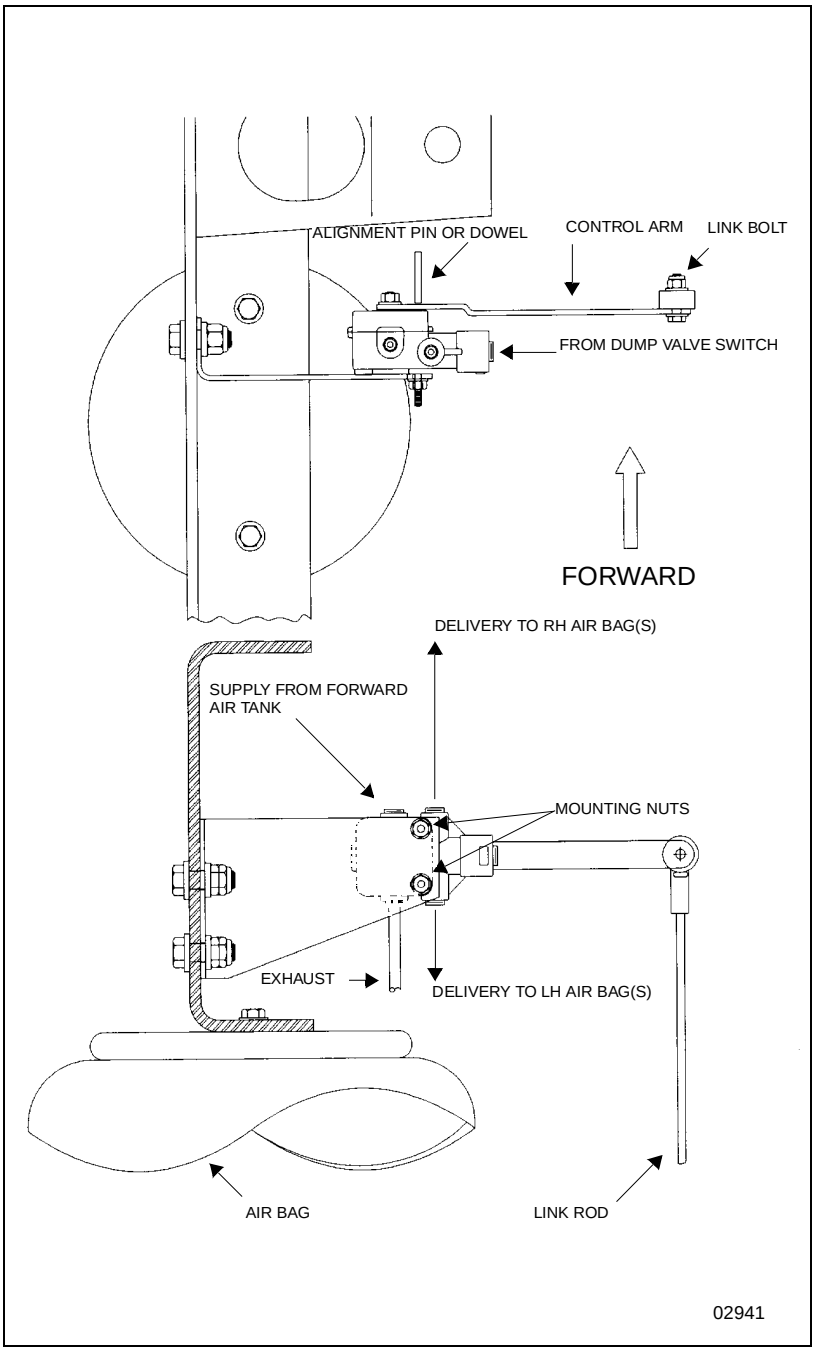

Typical Height Control Valve (Top & Rear Views Looking Forward)

https://truckmanualshub.com/

CAUTION:

- ***The rear of a vehicle will drop about 3 1/2 inches (88 mm) when the air springs are deflated. Ensure that no persons or objects that could be injured or damaged are under the vehicle before deflating the air springs.***
- ***To minimize risk of damage or injury, do not use a dump valve to deflate the air springs. Rotate the height control valve(s) manually to ensure positive control of air spring deflation.***
- ***To minimize risk of injury, keep away from air springs as they are being inflated.***

NOTE: On dual-valve systems, begin with the LH valve on the next step.

2. Loosen the fasteners mounting a height control valve to its bracket.

NOTE: At least one of the mounting holes in the height control valve bracket will be slotted to permit rotating the valve.

3. Rotate the valve either clockwise or counterclockwise until air pressure in the air springs provides the ride height specified for that suspension. Measure the ride height from the bottom of the frame rail to the approximate centerline of the rearmost drive axle hub:

- For tandem axles, make the vertical measurement at the centerline of the suspension (see illustration on page 106).
- For a single axle, make the measurement in front of the axle, in the area forward of the tires but not past the suspension bracket.

4. When at the correct ride height, ensure that the height control valve lever is in the neutral position, then install either the built-in alignment pin or a 1/8-inch (3 mm) dowel (see page 107).
5. Torque the mounting fasteners to 55 — 75 Lb. in. (6.2 — 8.5 N.m.).
6. Remove the alignment pin or dowel.
7. Repeat Steps 2 through 6 above for the RH valve on vehicles with a dual-valve system.

https://truckmanualshub.com/

Driving With Deflated Air Springs

If an air spring is ruptured, there will be enough air pressure to drive the vehicle to a safe stop off the highway to investigate the problem.

WARNING! Your brakes could fail if you continue driving with deflated air springs. Air escaping from the system will lower the air pressure, which could cause a spring brake to engage. The spring brake may cause your brakes to drag and burn up the linings. Don't continue to operate in this condition.

You can get to a repair facility if you do the following:

- Remove the height control link connected to the axle and to the suspension air valve control arm. This will cause the air valve control arm to center in the closed position.
- The air system can then be pumped up to normal pressure for continued operation.

WARNING! Low air pressure could make the brakes unsafe for driving. Before driving the vehicle, make sure the pressure does pump up to over 100 psi for normal brake operation. If the air pressure does not pump up to at least 100 psi, don't try to move the vehicle.

CAUTION: Operating a vehicle with air suspension bags either overinflated or underinflated may cause damage to driveline components. If a vehicle must be operated under such conditions, do not exceed 5 mph.

https://truckmanualshub.com/

Driving Tips And Techniques

This section covers additional driving tips and techniques on how to drive your Peterbilt more efficiently. For further information, read the American Trucking Association's (ATA) *Truck Driver's Handbook*. It will give you more tips on starting, shifting, and driving your vehicle.

Coasting

WARNING! Do not coast with the transmission in neutral or with the clutch pedal depressed—it is a dangerous practice. Without the use of the retarding power of the drivetrain, your vehicle can reach dangerous speeds. At very high speeds you may not be able to put the transmission in any gear. At high speeds you could seriously damage your vehicle or cause an accident when you put the transmission in gear. The engine speed could exceed the maximum governed speed and cause a serious accident due to mechanical failures.

Do not coast with the transmission in neutral or with the clutch pedal depressed. Besides being illegal and dangerous, coasting is also expensive. It causes premature failure or damage to the clutch and transmission and overloads the brake system.

Coasting with the transmission in neutral also prevents proper transmission component lubrication. During coasting the transmission is driven by the rear wheels, and the countershaft gear (which lubricates the transmission components by oil splash) will only be turning at idle speed.

Descending a Grade

WARNING! Do not hold the brake pedal down too long or too often while going down a steep or long grade. This could cause the brakes to overheat and reduce their effectiveness. As a result, the vehicle will not slow down at the usual rate. To reduce the risk of personal injury and/or an accident, before going down a steep or long grade, reduce speed and shift the transmission into a lower gear to help control your vehicle speed. Failure to follow procedures for proper downhill operation could result in loss of vehicle control.

https://truckmanualshub.com/

Engine Overspeed

CAUTION: To avoid engine damage, do not let the engine rpm go beyond the maximum governed rpm—valve damage could result if overspeed conditions occur.

NOTE: Often these recommendations are secondary to maintaining an adequate and safe speed relative to the surrounding traffic and road conditions.

- Operate the engine within the optimum engine rpm range and do not allow the rpm's to exceed the maximum governed speed. See your *Engine Operation and Maintenance manual* for information regarding engine rpm. When the engine is used as a brake to control vehicle speed (e.g., while driving down a grade), do not allow the engine rpm to exceed maximum governed speed.
- Under normal load and road conditions operate the engine in the lower end of the range.

Use of Tachometer

The tachometer is an instrument that aids in obtaining the best performance of the engine and manual transmission, serving as a guide for shifting gears. Refer to the *Engine Operation and Maintenance manual* for optimum engine rpm.

If the engine rpm moves beyond the maximum governed speed, indicating an overspeed condition, apply the service brake or shift to a higher gear to bring engine rpm within the optimum speed range.

- When driving downhill: shift to a lower gear, use the engine brake (if so equipped), and use the service brake, keeping the engine speed below 2,100 rpm.

When the engine speed reaches its maximum governed speed, the injection pump governor cuts off fuel to the engine. However, the governor has no control over the engine rpm when it is being driven by the vehicle's transmission, for example, on steep downgrades. Apply service brakes or shift to a higher gear.

Fuel economy and engine performance is also directly related to driving habits:

- The best results in trip time and fuel economy are obtained while driving the vehicle at a steady speed.
- Shift into higher or lower gears (or apply the service brake) to keep engine rpm near the lower end of the optimum operating range.
- Avoid rapid acceleration and braking.

https://truckmanualshub.com/

PART 8: MAINTENANCE AND SERVICE

Preventive Maintenance Schedule

Your preventive maintenance program begins with the daily checks you perform. See PART 6: DRIVER'S CHECKLIST for these. If you check your Peterbilt vehicle regularly, you can avoid many large, expensive, and time-consuming repairs. Your vehicle will operate better, be safer, and last longer. Neglect of recommended maintenance may in some cases void your vehicle's warranty. So for your safety and the life of your vehicle, please follow the Maintenance Schedule. Remember - there may be maintenance operations that demand skills and equipment you don't have. If so, please take your vehicle to an expert mechanic, for your safety and your vehicle's safety.

WARNING! It can be dangerous to attempt maintenance work without sufficient training and the proper tools. You could be injured, or you could make your vehicle unsafe. Do only those maintenance items you are fully trained and equipped to do.

- ***Before attempting any procedures in the engine compartment, stop the engine and let it cool down. Hot components can burn skin on contact.***
- ***Be alert and cautious around the engine at all times while the engine is running.***
- ***If work has to be done with the engine running, always (1) set the parking brake, (2) chock the wheels, and (3) ensure that the shift lever or selector is in Neutral.***
- ***Exercise extreme caution to prevent neckties, jewelry, long hair, or loose clothing from getting caught in the fan blades or any other moving engine parts.***
- ***Disconnect the battery ground strap whenever you work on the fuel system or the electrical system. When you work around fuel, do not smoke or work near heaters or other fire hazard. Keep an approved fire extinguisher handy.***
- ***Always support the vehicle with appropriate safety stands if it is necessary to work underneath the vehicle. A jack is not adequate for this purpose.***
- ***When working underneath the vehicle without appropriate safety stands but with the wheels on the ground (not supported), make sure that (1) the vehicle is on hard level ground, (2) the parking brake is applied, (3) all wheels are chocked (front and rear) and (4) the engine cannot be started. Remove the ignition key.***
- ***Never start or let the engine run in an enclosed, unventilated area. Exhaust fumes from the engine contain carbon monoxide, a colorless and odorless gas. Carbon monoxide can be fatal if inhaled.***

NOTE: Suitable wheel chocks are at a minimum an 18-inch (46 cm) long 4x4.

https://truckmanualshub.com/

PREVENTIVE MAINTENANCE (PM) INTERVALS					
I	A	B	C	D	E
At the first 15,000 mi./ 24,000 km or at the first PM	15,000 mi./ 24,000 km/ Monthly	30,000 mi./ 48,000 km	60,000 mi./ 96,000 km/ 6 months	120,000 mi./ 192,000 km/ Annually	240,000 mi./ 384,000 km

NOTE:

- *Where questions or discrepancies develop between these recommendations and component supplier recommendations, consult the supplier for specific recommendations.*
- *Maintenance requirements of specific vocational configurations will dictate whether the intervals used are determined based on mileage, time in service, hours operating, etc.*
- *These maintenance practices and intervals are intended as additional requirements and are not to replace, in whole or in part, the pretrip inspection requirements of the Commercial Driver's License (CDL) as established in the Federal Commercial Motor Vehicle Safety Act of 1986.*

If you operate your vehicle off-highway or in very heavy-duty applications such as mining, logging, or earth moving, you will need to perform maintenance checks and services more frequently. The charts on the following pages show the maintenance intervals for recommended maintenance practices.

NOTES:

- Engine lubricating oil change intervals aren't listed here. Refer to your engine's operating manual for recommendations. For specific information on maintenance procedures consult your vehicle maintenance manual.
- The initial fill of drive axle lubricant must be changed before the end of the first scheduled maintenance interval. Refer to the information on page 137 before you put a new vehicle into service.
- The initial fill of lubricant in manual transmissions must be changed before the end of the first maintenance interval. See page 134 for specific information.
- If your vehicle is equipped with an automatic transmission, consult the owner's manual for it that came with your vehicle to obtain lubricant check and change intervals.

https://truckmanualshub.com/

SYSTEM	COMPONENT	MAINTENANCE TASK	Recommended PM Interval					
			I	A	B	C	D	E
Frame	Fifth Wheel	Check the kingpin lock and plate for wear and function; lubricate (NLGI #2 grease).		X				
	Frame Fasteners	Check for tightness; tighten to the specified torque value as required (see page 170).					X	
	Crossmembers and Mounting Brackets	Inspect for cracks and loose fasteners. Replace or tighten to the specified torque value as required (see page 170).					X	
Front Axle	Steering knuckles, thrust bearings, kingpins, drawkeys, tie rod ends, steering stops, & bushings	Inspect for wear and damage and for endplay. Shim or replace as required (see page 168).					X	
	Kingpin bushings & tie rod ball ends	Lubricate with approved grease.				X		
	Total Vehicle Alignment	Check and adjust as required.	X				X	
Front Suspension	Front Spring	Inspect for cracked leaves, worn bushings, & excessive corrosion.				X		
	Spring Pins & Shackles	Inspect for worn parts and excessive joint clearance. Shim or replace as required.				X		

https://truckmanualshub.com/

SYSTEM	COMPONENT	MAINTENANCE TASK	Recommended PM Interval					
			I	A	B	C	D	E
Front Suspension	Spring Pins	Lubricate.		X				
	Shock Absorbers	Inspect for leaking, body damage, and damaged or worn bushings. Replace as required.				X		
	Shock Absorbers	Check for proper function.		X				
	U-bolts (ON HIGHWAY)	Check the general condition and the tightness of the nuts. Tighten the nuts to the specified torque value as required (see page 169).	X			X		
	U-bolts (OFF HIGHWAY)	Check the general condition and the tightness of the nuts. Tighten the nuts to the specified torque value as required (see page 169).		X				
Drive Axle (Dana)	Axle Housing	Visually inspect for damage or leaks.				X		
	Axle Housing	Check oil level. Check “cold.” Torque the drain plug.				X		
	Axle Housing	Drain the lubricant while warm. Flush each unit with clean flushing oil. Change the lubricant.	See information on page 140					
	Air Shift Unit	Check the lubricant level.				X		
	Air Shift Unit	Remove the housing cover and drain the lubricant. Wash the parts thoroughly and dry in air.					X	

https://truckmanualshub.com/

SYSTEM	COMPONENT	MAINTENANCE TASK	Recommended PM Interval					
			I	A	B	C	D	E
Drive Axle (Dana)	Breather	Clean or replace.					X	
	Lube Pump (ON HIGHWAY)	Remove the magnetic strainer and inspect for wear particles. Wash in solvent and dry in air.					X	
	Lube Pump (OFF HIGHWAY)	Remove the magnetic strainer and inspect for wear particles. Wash in solvent and dry in air.				X		
	Lube Filter (ON HIGHWAY)	Change.					X	
	Lube Filter (OFF HIGHWAY)	Change.				X		
	Magnetic drain plug and breather (ON HIGHWAY)	Clean or replace.					X	
	Magnetic drain plug and breather (OFF HIGHWAY)	Clean or replace.				X		
Drive Axle (Meritor)	Axle Housing	Check the “cold” fill level at the differential carrier plug for a pinion angle of less than 7 degrees, or at the axle bowl plug for a pinion angle of greater than 7 degrees. Tighten the plug to 35 - 50 Lb. ft. (47 - 68 N.m.)				X		
	Axle Housing	Visually inspect for damage or leaks.				X		

https://truckmanualshub.com/

SYSTEM	COMPONENT	MAINTENANCE TASK	Recommended PM Interval					
			I	A	B	C	D	E
Drive Axle (Meritor)	Axle Housing	Drain and replace the lubricant.	See information on page 139					
	Lubricant filter	Change the filter.					X	
	Breather	Check the operation. If the cap doesn't rotate freely, replace.				X		
	Input shaft & pinion shaft	Check and adjust the endplay.					X	
	Axle shaft	Tighten the rear axle flange nuts to the specified torque value.					X	
	Interaxle differential	Check the operation.					X	
Rear Suspension	U-bolts	Check the torque. Tighten to specified torque value as required (see page 169).	X			X		
	Frame & crossmember bolts	Check the torque. Tighten to specified torque value as required (see page 170).					X	
	Mounting brackets and fasteners	Check the condition and the fastener torque. Tighten to the specified torque value as required (see page 170).	X				X	
Brakes	Brake lining	Inspect; replace as required.		X				
	Slack adjusters	Check the push rod travel and check the control arm for cracks. Adjust at reline (see page 143).		X				
	Slack adjusters	Lubricate (NLGI #2 grease).		X				

https://truckmanualshub.com/

SYSTEM	COMPONENT	MAINTENANCE TASK	Recommended PM Interval					
			I	A	B	C	D	E
Brakes	Brake camshaft bearing	Lubricate (NLGI #2 grease).				X		
	Brake treadle valve	Clean the area around the treadle, boot, and mounting plate. Check the pivot and mounting plate for integrity. Check the plunger boot for cracks. Lubricate roller pin, pivot pin, and plunger (NLGI #2 grease).				X		
	Brake treadle valve	Rebuild through an authorized Peterbilt service facility.					X	
	Brake air system	Check air lines and fittings for leaks (see page 143). Adjust routing as required to reduce chafing. Check tank mounting and condition.		X				
	Brake air system	Clean or replace the inline filters.				X		
Hub, Drum, & Hubcap	Hubs (non-LMS)	Check the bearing endplay and adjust as required (see page 152).			X			
	Hubs (non-LMS) with out-runner seals	Clean the components and check for excessive wear or damage. Change the oil and seal (see page 141).						X
	Hubs (non-LMS) with standard seals	Clean the components and check for excessive wear or damage. Change the oil and seal (see page 141).					X	
	Hub seals (all)	Check for leaks; replace as required.			X			

https://truckmanualshub.com/

SYSTEM	COMPONENT	MAINTENANCE TASK	Recommended PM Interval					
			I	A	B	C	D	E
Hub, Drum, & Hubcap	LMS Hubs (Dana)	Check the bearing endplay and adjust as required (see page 152).					X	
	LMS Hubs (Dana) with Synthetic Lubricant	Clean the components and check for excessive wear or damage. Change the oil and seal (see page 141).	500,000 miles/ 800,000 km					
	LMS Hubs (Dana) with Mineral Lubricant	Clean the components and check for excessive wear or damage. Change the oil and seal (see page 141).	360,000 miles/ 576,000 km					
	Brake drums	Inspect for visible cracks, heat checking, galling or scoring of the braking surface, and for severe corrosion on the outside surface. Check for out-of-round or oversize condition [0.080 in. (2 mm) more than the original diameter]. Replace as required.			X			
	Hubcaps	Clean the sight window. Check the center plug, mounting flange, and fill plug for leaks and for proper installation. Replace broken or damaged parts. Check the lubricant level and add as required.		X				
Main & auxiliary transmission	Main & auxiliary transmission and transfer case	Inspect for visible damage, signs of overheating, and leaks.	X	X				
	Main & auxiliary transmission and transfer case	Check the drain plugs for tightness.			X			

https://truckmanualshub.com/

SYSTEM	COMPONENT	MAINTENANCE TASK	Recommended PM Interval					
			I	A	B	C	D	E
Main & auxiliary transmission	Oil cooler	Clean the fins (air-to-oil type) and body. Check the hose condition and for leaks; replace as required.				X		
Main & auxiliary transmis-sion (Dana)	Main & auxiliary transmis-sion	Check the oil level; refill as required (see page 134 and page 136).			X			
Main & auxiliary transmis-sion (Dana)	Main & auxiliary transmis-sion (ON HIGHWAY)	Drain the lubricant while warm. Flush each unit with clean flushing oil.	500,000 miles/ 800,000 km					
Main & auxiliary transmis-sion (Dana)	Main & auxiliary transmis-sion (OFF HIGHWAY)	Drain the lubricant while warm. Flush each unit with clean flushing oil.	X			X		
Main & auxiliary transmission (Meritor)	Transfer Case	Check the oil level; refill as required (see page 138).	X	X				

https://truckmanualshub.com/

SYSTEM	COMPONENT	MAINTENANCE TASK	Recommended PM Interval					
			I	A	B	C	D	E
Main & auxiliary transmission (Meritor)	Transfer Case	Drain lubricant while warm. Flush each unit with clean flushing oil.			X			
Main & auxiliary transmission (ZFMeritor)	Freedomline Transmission	Change the oil (see page 138).	500,000 miles/ 800,000 km					
Air Intake	Air intake piping, mounting, and charge air cooler	Check the system for broken pipes, leaks, joint integrity, cleanliness, and proper support (see page 173).				X		
	Engine air intake tubing	Disassemble, clean, check for cracks, leaks, and joint integrity.					X	
	Cold starting aids	Check for leaks and proper operation (see page 81).					X	
	Air cleaner	Replace the element as indicated (see page 173).	When required by the air restriction indicator					
Clutch	Clutch pedal shaft	Check for excessive looseness and lubricate (NLGI #2 grease).		X				
	Clutch pedal	Check for proper free pedal (see page 158).		X				
	Clutch release linkage	Check for excessive looseness and lubricate (NLGI #2 grease).		X				
	Clutch release bearing	Lubricate.		X				

https://truckmanualshub.com/

SYSTEM	COMPONENT	MAINTENANCE TASK	Recommended PM Interval					
			I	A	B	C	D	E
Clutch	Clutch release shaft	Lubricate.		X				
Cooling	Hoses	Check the radiator and heater hoses for leaks.	X			X		
	System	Flush, drain, and refill with new coolant mix (see page 159).						X
	System	Check concentration of antifreeze solution and condition of coolant. (see page 159).		X				
	System	Change coolant filter; add conditioner and supplemental cooling additives (SCAs) (see page 159).					X	
	Fan clutch housing	Check for leaks (see page 172).	X			X		
Tires & Wheels	Tires	Check inflation pressure (see page 146).	Weekly “cold” using calibrated gauge					
	Tires	Inspect for cuts, irregular wear, missing lugs, sidewall damage, etc.		X				
	Disc wheels	Inspect the wheel disc for any cracks or surface irregularities. Inspect the rim edge and bead seat area for damage. Replace any damaged wheels - DO NOT ATTEMPT TO REPAIR.		X				
	Demountable rims	Inspect the mounting ring, rim gutter, side ring, and lock ring for damage; replace as required.		X				

https://truckmanualshub.com/

SYSTEM	COMPONENT	MAINTENANCE TASK	Recommended PM Interval					
			I	A	B	C	D	E
Tires & Wheels	Wheel nuts and studs	Check the tightness of the fasteners and tighten the fasteners to the specified torque as required (see page 152).		X				
	Wheel nuts and studs	Inspect for damaged hex corners, stripped or damaged threads, and excessive corrosion; clean or replace as required.		X				
Power Steering	Reservoir	Check the fluid level (see page 142).		X				
	Reservoir (ON HIGHWAY)	Drain, replace the filter, and refill (see page 142).	X					X
	Reservoir (OFF HIGHWAY)	Drain, replace the filter, and refill (see page 142).	X				X	
	Steering gear	Check the lash of the sector shaft; adjust as required.				X		
	Steering gear	Grease the trunnion bearing (EP NLGI #2 lithium-based, moly-filled, HD grease).				X		
	Steering gear	Grease the input shaft seal (EP NLGI #2 lithium-based, moly-filled, HD grease).				X		
	Power assist cylinder	Lubricate the ball joints. Inspect for leaking rod seals, damaged ball joint boots, and damage to cylinder rod or barrel.		X				
	Hoses and tubes	Check for leaks and chafing.				X		
	Steering linkage	Check all joints for excessive lash; replace as required (see page 168).					X	

https://truckmanualshub.com/

SYSTEM	COMPONENT	MAINTENANCE TASK	Recommended PM Interval					
			I	A	B	C	D	E
Power Steering	Draglink tube clamp and ball socket	Check the torque; tighten to specified torque value as required.	X			X		
	Pitman arm clamp bolt and nut	Check the torque; tighten to specified torque value as required.	X			X		
	Steering intermediate shaft	Check the torque on the pinch bolt and nut.	X			X		
	Steering intermediate shaft U-joints (ON HIGHWAY)	Lubricate [EP NLGI #2 HD grease, +325° F to -10° F (+163° C to -23° C) range].	X			X		
	Steering intermediate shaft U-joints (OFF HIGHWAY or CITY DELIVERY)	Lubricate [EP NLGI #2 HD grease, +325° F to -10° F (+163° C to -23° C) range].	X		X			
	Draglink and tie rod arm ball sockets (ON HIGHWAY)	Lubricate (EP NLGI #2 lithium-based, moly-filled, HD grease).	X		X			
	Steering intermediate shaft U-joints (OFF HIGHWAY or CITY DELIVERY)	Lubricate (EP NLGI #2 lithium-based, moly-filled, HD grease).	X	X				
Fuel & Tanks	Fuel tanks	Inspect tanks, brackets, hoses, and fittings for correct location, tightness, abrasion damage, and leaks; repair or replace as required.				X		

https://truckmanualshub.com/

SYSTEM	COMPONENT	MAINTENANCE TASK	Recommended PM Interval					
			I	A	B	C	D	E
Fuel & Tanks	Fuel tank breathers	Check for proper function; clean the drain hoses.					X	
	Fuel tank straps	Check the strap tightness; tighten to proper torque value as required: -Aluminum tank: 30 Lb. ft. (41 N.m.) -Cylindrical Steel tank: 8 Lb. ft. (11 N.m.)	X		X			
	Fuel tank steps	Check for snug fit of side plates against tank and tank straps. Check for damaged or broken steps, missing bolts, and missing grommet between tank and side plate. Replace missing or damaged parts and adjust for fit as required.		X				
Driveshafts	Models 1610-1810 & SPL-90 slip member & U-joints	Lubricate.	X	X				
	Model SPL-100 slip member & U-joints	Lubricate.				X		
	Models SPL-140/140HD/170/170HD/250/250HD slip members & U-joints	Lubricate.				X		
	Models SPL-140XL/170XL/250XL slip members and U-joints (ON HIGHWAY & LINE HAUL)	Lubricate.	360,000 miles/576,000 km/every 3 years					

https://truckmanualshub.com/

SYSTEM	COMPONENT	MAINTENANCE TASK	Recommended PM Interval					
			I	A	B	C	D	E
Driveshafts	Models SPL-140XL/ 170XL/250XL slip members and U-joints (OFF HIGHWAY & CITY)	Lubricate.					X	
Battery Boxes, Tool Boxes, and Steps	Battery cables	Check the condition of the cables, cushion clamps, and routing. Replace a cushion clamp if the rubber has deteriorated. Repair or tighten terminals, and secure cables to prevent chafing. Replace damaged cables (cuts, cracks, or excessive wear) (see page 162).	X			X		
	Batteries	Check for cracks and damage, electrolyte level, condition of terminals, and tightness of holddowns (see page 162).				X		
	Battery box and tray	Check the box integrity. Clean the drain tube and check for acid leaks. Check condition of all equipment mounted under the box.				X		
Electrical & lights	Headlamps	Check the aim and adjust as required.				X		
	Warning lights in light bar	Check at the ignition start position to verify bulbs function (see page 53).		X				
	Turn signal	Visual check.		X				
	Stop lights	Visual check.		X				

https://truckmanualshub.com/

SYSTEM	COMPONENT	MAINTENANCE TASK	Recommended PM Interval					
			I	A	B	C	D	E
Electrical & lights	Reverse lights	Visual check.		X				
	Alternator	Check operation and output.				X		
	Alternator	Check tightness of the pulley nut.				X		
	Alternator	Check the tension of the drive belt (see page 171).				X		
	Alternator	Check tightness of the terminal hex nuts.				X		
	Starter	Check torque on hex nuts.				X		
	ECM connector	Check the tightness of the ECM connector.				X		
	Wheel sensors	Check for damaged sensors and connectors, and worn or frayed wires.				X		
	Fuel tank sending unit	Check the mounting screws and electrical connections for worn or damaged wires and connectors.	X		X			
	Power supply harnesses (engine, transmission, etc.)	Check for worn or damaged insulation, corroded terminals, frayed wires, and oil or fluid leaks on the connectors or wiring.		X				
	Power supply harnesses (engine, transmission, etc.)	Wash to remove excess grease.				X		
Cab structure, doors, & hoods	Hood	Lubricate the lower hood pivot (only if lube fittings are present).				X		

https://truckmanualshub.com/

SYSTEM	COMPONENT	MAINTENANCE TASK	Recommended PM Interval					
			I	A	B	C	D	E
Cab, doors, & hoods	Hinges and latch	Lubricate with silicone spray.				X		
	Body & cab holddown bolts	Check the condition and tightness.					X	
	Tilt pump	Check the oil level; refill as required.				X		
	Cab tilt system	Check for hydraulic leaks.					X	
Heating & Air Conditioning	Air conditioner	Operate the system. (NOTE: The air conditioning system is active when the Defrost/Defog mode is selected.)		X				
	Heater & air conditioner	Perform the checks listed on page 175.			X			
	Cab air filter	Clean; replace after a maximum of three cleanings.				X		
	Heater & air conditioner	Full operational and diagnostic check.					X	
Exhaust	System	Check for leaks and proper support (see page 174).t		X				
Air	Air compressor governor	Replace air strainer.			X			
	Air lines	Check condition and routing to prevent chafing.			X			
	System	Lubricate (see page 156).				X		
	Inline filters	Replace elements or clean with solvent.				X		

https://truckmanualshub.com/

SYSTEM	COMPONENT	MAINTENANCE TASK	Recommended PM Interval					
			I	A	B	C	D	E
Air	Air dryer	Perform the checks listed on page 157.			X			
	Air dryer (ON HIGHWAY)	Overhaul.	360,000 miles/ 576,000 km					
	Air dryer (OFF HIGHWAY)	Overhaul.					X	
Engine	Basic Engine	The maintenance and service interval recommendations for the specific engine are the maintenance requirements specified in the engine manufacturer's Operations and Maintenance Manual included with the vehicle. Strict adherence to these recommendations is required to maintain warranty coverage. The maintenance and service interval recommendations for the engines vary significantly, depending on the manufacturer and the model of the engine. As a minimum, perform the operations listed below:						
	Fuel filter	Drain, clean, and refill or replace as required (see page 167).		X				
	Bypass oil filter	Clean filter and change element.		X				
	Block	Clean with steam or solvent.			X			
	Crankcase breather	Clean.			x			
	Manifold nuts	Tighten to specified torque.			X			
	Oil pan Capscrew	Tighten to specified torque.			X			

https://truckmanualshub.com/

SYSTEM	COMPONENT	MAINTENANCE TASK	Recommended PM Interval					
			I	A	B	C	D	E
Engine	Drive pulleys	Check for tightness.			X			
	Turbocharger	Check manifold and mounting.			X			
	Radiator shutters	Check controls.			X			
	All lines and seals	Check for leaks.			X			
	Mounts	Check for tightness.			X			
	Fan hub	Lubricate; check for air leaks. If vehicle is not equipped with an air filter/dryer, check the inline filter to the fan hub (see page 172).			X			

https://truckmanualshub.com/

Lubricant Specifications

WARNING! Handle lubricants carefully. Vehicle lubricants (oil and grease) are poisonous and can cause sickness. They can also damage the paint on the vehicle.

In this section you will find the basic information you need to do the routine lubrication your vehicle requires. Of course you will want to schedule service more frequently if you are operating under severe conditions such as extreme heat or cold, with very heavy loads, off-road, etc. For any special service requirements, consult your service manuals and your lubricant supplier. And please remember: one key to keeping your truck running at top economy and in prolonging its life is proper lubrication servicing. Neglecting this essential aspect of vehicle care can cost time and money in the long run.

CAUTION: Do not mix different types of lubricants. Mixing lubricants (oil and grease) of different brands or types could damage vehicle components; therefore, drain (or remove) old lubricants from the unit before refilling it.

Engine

Proper engine lubrication depends on the outside temperatures where you will be driving. Use the oil recommended for the conditions you are most likely to be facing. You will find a complete engine lubrication service guide in the Engine Operation Manual that came with your vehicle. There, the engine manufacturer explains more fully all the maintenance operations that you — and a qualified service mechanic — need to perform on your engine.

WARNING! Exhaust fumes from the engine contain carbon monoxide, a colorless and odorless gas. Do not breathe the engine exhaust gas. A poorly maintained, damaged or corroded exhaust system can allow carbon monoxide to enter the cab or sleeper. Entry of carbon monoxide into the cab is also possible from other vehicles nearby. Failure to properly maintain your vehicle could cause carbon monoxide to enter the cab/sleeper and causes serious illness.

CAUTION: Never idle your vehicle for prolonged periods of time if you sense that exhaust fumes are entering the cab or sleeper. Investigate the cause of the fumes and correct it as soon as possible. If the vehicle must be driven under these conditions, drive only with the windows slightly open. Failure to repair the source of the exhaust fumes may lead to personal harm.

https://truckmanualshub.com/

PART 8: MAINTENANCE AND SERVICE

NOTE: Keep the engine exhaust system and the vehicle's cab/sleeper ventilation system properly maintained. It is recommended that the vehicle's exhaust system and cab/sleeper be inspected

- *By a competent technician every 15,000 miles/24,000 km*
- *Whenever a change is noticed in the sound of the exhaust system*
- *Whenever the exhaust system, underbody, cab or sleeper is damaged*

Master Lubrication Index

Lubricant Symbol Key

BB: Ball Bearing grease

CB: Engine oil for mild to moderate requirements

CC/CD: Engine oil for severe requirements (MIL-L-2104B / MIL-L-45199B w/ 1.85% max. sulfated ash content)

CD: Engine oil meeting API "Five engine test sequence"

CD50: SAE 50W synthetic transmission fluid

CE: Engine oil meeting severe duty service requirements for direct-injection turbocharged engines.

CL: Multipurpose chassis grease

C4: Type C4 transmission fluid (torque fluid)

EP: Extreme Pressure Lubricant

GL: Straight mineral gear lubricant

HD: Hypoid Gear Oil, A.P.I. - GL-5, SAE 80W-90

HT: High Temperature grease (Timken Spec. 0-616)

MP: Multipurpose gear lubricant (MIL-L-2105B)

WB: Wheel Bearing grease (Timken Spec. 0-610)

NOTE: The responsibility for meeting these specifications, the quality of the product, and its performance in service rests with the lubricant supplier.

https://truckmanualshub.com/

Component Lubrication Index

Component	Lubricant
Universal Joints	EP
Drive Shaft Splines	CL
Wheel Bearings (driven hubs)	HD
Wheel Bearings (nondriven hubs)	CD50
Wheel Bearings (all grease-lubricated hubs)	WB
Steering Column	CL
Alternator Bearing	BB*
Fan Hub	BB*
Power Steering Reservoir	C4
Steering Drag Link	CL
Steering Knuckles	CL
Spring Pins	CL
Clutch Release Bearings	BB
Brake Shoe Anchor Pins	HT
Brake Cam Bearings	HT
Slack Adjusters	CL
Starter Bearings	CC
Turbocharger Aneroid	CC
Water Pump	BB*
Cab Tilt Hydraulic Reservoir	Hydraulic Jack Oil, MIL-L-5056B
Speedometer Cables	Lubriplate Aero or equivalent

*Consult manufacturer or lubricant supplier for special details.

For oil reservoirs with side filler plugs (transmissions, axles, steering gear boxes, transfer cases, etc.) the oil must be **level** with the filler opening.

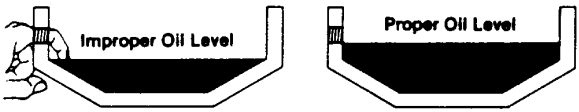

Use care when checking the oil level with a finger. Just because you can reach the oil level with a finger, does not mean the oil level is correct.

02942

https://truckmanualshub.com/

Fuller Transmission Lubrication

Fuller transmissions are designed so that the internal parts operate in a bath of oil circulated by the motion of gears and shafts. Grey iron parts have built-in channels where needed to help lubricate bearings and shafts. All parts will be amply lubricated if these procedures are closely followed:

1. Maintain oil level; check it regularly.
2. Change oil regularly.
3. Use the correct grade and type of oil.
4. Buy oil from a reputable dealer.

Lubrication Change and Inspection

Highway Use

- Refer to the Eaton Fuller transmission manual for servicing information.
- Refer to the oil change vs. temperature chart below for special oil change information. The “intermittent peak temperature” is the maximum temperature observed for a short time in a fully loaded vehicle performing normally.

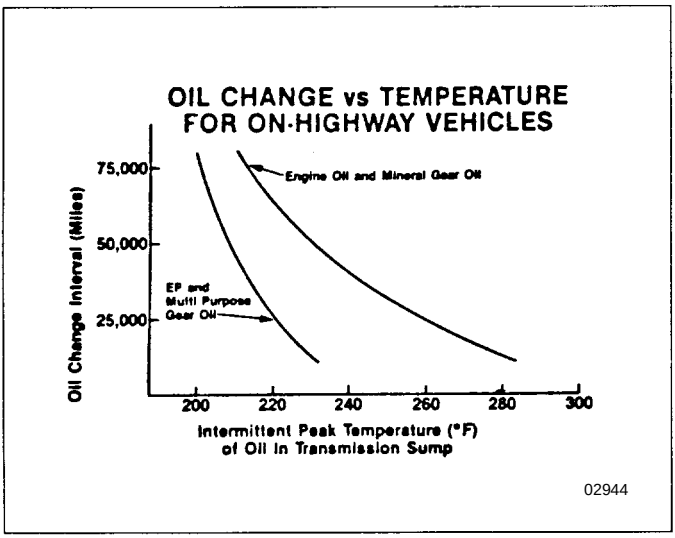

Off-Highway Use

- Refer to the Eaton Fuller transmission manual for servicing information.

https://truckmanualshub.com/

CAUTION: Exceeding the recommended oil change intervals may be harmful to the life of the transmission and the transmission oil cooler.

Recommended Lubricants

Type	Grade (SAE)	Ambient Temperature
Heavy Duty Engine Oil MIL-L-2104B, C, or D; API - SF, or API-CD (Previous API designations acceptable)	50	Above 10° F (-12° C)
	40	Above 10° F (-12° C
	30	Below 10° F (-12° C)
Mineral gear oil with rust and oxidation inhibitor API-GL-1	90	Above 10° F (-12° C)
	80W	Below 10° F (-12° C)
Synthetic Lubricant*	50	All
* See your Peterbilt dealer for approved brands.		

Allison Transmission Lubrication

Refer to your transmission manual (furnished separately) for lubrication information.

https://truckmanualshub.com/

Spicer Transmission Lubrication

It is extremely important to use the proper lubricants and maintain the correct oil levels in Spicer units. This will ensure proper lubrication and operating temperatures in these units.

Recommended Lubricants

The lubricants listed below are recommended, in order of preference, for use in all Spicer mechanical transmissions, auxiliaries, and transfer cases. Do not use extreme pressure additives such as those found in multipurpose or rear axle-type lubricants. These additives are not required in Spicer transmissions, and may in some cases create transmission problems. Multipurpose oils, as a group, have relatively poor oxidation stability, a high rate of sludge formation, and a greater tendency to react with or corrode the steel and bronze parts.

Type	Grade (SAE)	Ambient Temperature
Heavy Duty Engine Oil MIL-L-2104D or MIL-L-46152B, API-SF or API-CD (MIL-L-2104B or C or MIL-L-46152 designations are acceptable)	30, 40, or 50	Above 0° F (-18° C)
	30	Below 0° F (-18° C)
Mineral gear oil (R & O type) API-GL-1	90	Above 0° F (-18° C)
	80	Below 0° F (-18° C)
Synthetic Engine Oil meeting MIL-L-2104D or MIL-L-46152B, API-SF or API-CD	CD50 CD30	All
*Synthetic Gear Oil Meeting MIL-2105C or API-GL5	EP75W90 EP75W140	All
*EP Gear Oils are not recommended when lubricant operating temperatures are above 230° F (110° C).		

https://truckmanualshub.com/

Oil Changes

CAUTION: When adding oil, types and brands of oil should not be intermixed because of possible incompatibility, which could decrease the effectiveness of the lubrication or cause component failure.

An initial oil change and flush should be performed after the transmission has been placed in actual service. This change should be made any time after 3000 miles (4800 km) but never longer than 5000 miles (8000 km) of over-the-road service. In off-highway use, the change should be made after 24 hours but before 100 hours of service have elapsed.

Refilling

Remove all dirt around filler plug. Refill with new oil of the grade recommended for the existing season and prevailing service. Fill to the bottom of the level testing plug positioned on the side of the transmission. **Do not** overfill the transmission. Overfilling usually results in oil breakdown due to excessive heat and aeration from the churning action of the gears. Early breakdown of the oil will result in heavy varnish and sludge deposits that plug up oil ports and build up on the splines and bearings. Overflow of oil can also escape onto clutch or parking brakes. When adding oil, **do not** mix different types of oil.

https://truckmanualshub.com/

Meritor Transmission Lubrication

Lubrication Change and Inspection

- An initial oil change and flush should be performed after the transmission has been in service for 5000 miles (8000 km).
- Refer to the Meritor Transmission manual for servicing information.

Recommended Lubricants

Type Of Lubricant	Grade (SAE)	Ambient Temperature
Heavy-Duty Engine Oil A.P.I.-CD, -CE, -SF or -SG (Previous A.P.I. designations acceptable)* MIL-L-2104B, C, or D*	50	Above 10° F (-12° C)
	40	Above 10° F (-12° C)
	30	Below 10° F (-12° C)
Mineral Gear Oil with Rust and Oxidation Inhibitor, A.P.I.-GL-1*	90	Above 10° F (-12° C))
	80	Below 10° F (-12° C)
Synthetic Oil, Meritor Specification 0-81 *@	50	All
Mobil Trans SHC50 Synthetic#	50	All

* Multi-weight and EP gear oils are not recommended.

DO NOT MIX OILS IN THE TRANSMISSION.

@ See your Peterbilt dealer for Meritor-approved lubricant brands.

Freedomline transmission

https://truckmanualshub.com/

Meritor Axle Lubrication

NOTE: Axles utilized in 100% off-highway use are not eligible for Meritor's Advanced Lube Rear Drive Axle program.

Under Meritor's Advanced Lube Rear Drive Axle program, the axles listed below are exempt from an initial lubricant change:

AVAILABLE ADVANCED LUBE AXLES			
RS-17-145	RS-23-180	RT-40-145	RT-44-145P
RS-19-145	RS-26-180	RT-40-145P	RT-46-160
RS-21-145	RS-30-180	SQ-100A	RT-46-160P
RS-23-160	RT-34-145	SQ-100AP	RT-52-160
RS-23-161	RT-34-145P	RT-44-145	RT-52-160P

Meritor rear axles that do not appear on the list above will continue to require an initial drain at 3000-5000 miles (4800-8000 km).

- Refer to the Meritor Field Maintenance Manual for a particular axle for lubricant specifications.
- See your Peterbilt dealer for Meritor-approved lubricant brands.
- Refer to the following chart for lubricant change intervals:

Application	Type Of Lubricant	Mileage Interval
Linehaul	Synthetic	240,000 Miles (384,000 km)
	Synthetic with Pump and Filter	500,000 Miles (800,000 km)
	Mineral Base	120,000 miles (192,000 km)
City Delivery	Synthetic	120,000 miles (192,000 km)
	Synthetic with Pump and Filter	240,000 Miles (384,000 km)
	Mineral Base	120,000 miles (192,000 km)
Vocational	Synthetic	120,000 miles (192,000 km)
	Synthetic with Pump and Filter	120,000 miles (192,000 km)
	Mineral Base	120,000 miles (192,000 km)

- Change the lubricant filter every 120,000 miles (192,000 km). Top off the lubricant level with a similar lubricant.

https://truckmanualshub.com/

Eaton/Dana Axle Lubrication

- The original mineral-based lubricant must be drained within 3000-5000 miles (4800-8000 km) on all Eaton axles. This initial change is very important because it flushes out break-in contaminants that might otherwise cause premature wear.
- No initial drain is required on Eaton axles that are factory filled with an Eaton-approved synthetic lubricant.
- Mineral-based lubes must be drained within the first 5000 miles (8000 km) if converting to an Eaton-approved synthetic lube.
- Change the lubricant within the first 5000 miles (8000 km) of operation after a carrier head replacement, regardless of the lubricant type.
- Refer to the Eaton Field Maintenance Manual for a particular axle for lubricant specifications.
- See your Peterbilt dealer for Eaton-approved lubricant brands.
- Refer to the chart below for lubricant change interval.

Type of Lubricant	On-Highway Miles(km)	Maximum Change Interval	On/Off Highway Severe Service Miles (km)	Maximum Change Interval
Mineral-Based	120,000 (192,000)	Yearly	60,000 (96,000)	Yearly
Eaton-Approved Synthetic	240,000 (384,000)	2 Years	120,000 (192,000)	Yearly
Eaton-Approved Synthetic in axle with extended drain interval option	360,000 (576,000)			

https://truckmanualshub.com/

Wheel Bearing Lubrication

Oil-lubricated Driven Hubs

Use hypoid oil, A.P.I.-GL-5 SAE 80W-90 or equivalent. A minimum of 1 quart (921 ml) of oil is required for proper lubrication of each drive hub. Add oil through the filler hole in the hub; if none, add oil through the differential filler hole. (Note: Remember to replace vent plug or threaded filler plug when done.) Allow time for the oil to seep through the bearings when initially filling a hub. Maintain the differential oil level by adding oil until its surface is even with the bottom of the filler hole (see page 133).

Oil-lubricated Nondriven Hubs

Use CD50 synthetic transmission fluid SAE 50W or equivalent. A minimum of 9 oz. (270 ml) of lubricant is required for proper lubrication of an LMS™ hub; 10 - 13 oz. (295 - 400 ml) is required for a non-LMS hub, depending on wheel design. Allow time for the fluid to seep through the bearings when initially filling a hub. When properly filled, the fluid level will lie between the fluid level line and 1/4” above the line. (Note: Remember to replace vent plug when done.)

Grease-Lubricated Hubs

Repack the hub bearing with clean wheel bearing grease after disassembling, cleaning, and inspecting.

Universal Joint Lubrication

Refer to the Spicer Universal Joints and Driveshafts service manual and lubrication specifications.

https://truckmanualshub.com/

Steering Gear Lubrication

CAUTION: When adding fluid, be sure to use fluid of the same type. Do not mix different fluids. While many fluids have the same description and intended purpose, they should not be mixed due to incompatible additives. If incompatible (insoluble) fluids are mixed in a power steering system, air bubbles can be produced at the interface of the two fluids. This can cause cavitation, which reduces the lubrication between moving parts in the gear. This could result in worn components.

Inspection

NOTE: Before removing reservoir cover, wipe outside of cover so that no dirt can fall into the reservoir.

1. Check the fluid level; add fluid if required.
2. Check fluid for contamination, discoloration, or burnt smell; correct source of such problems before replacing fluid & filter.

Replacement

1. Replace both the fluid and filter as per the chart below.
2. Bleed the system if necessary

Steering Gear	Fluid *	Inspect [miles(km)]	Replace (miles/months)
TRW	Type C-4 Fluid	Every 15,000 (24,000)	Every 240,000 (384,000)/24
Sheppard	Type C-4 Fluid	Every 15,000 (24,000)	Every 240,000 (384,000)/24

*Extremely low temperatures may require lower viscosity fluids; consult your Peterbilt dealer for recommendations

@See TRW or Sheppard Service Manuals for additional fluid listings

Servicing Specific Systems And Units

This section will help you keep your Peterbilt vehicle in good running condition. There are a number of checks you can do, and you may be able to do some of the service work yourself. But please: let your dealer's service department do any work you don't have the tools or skill to perform. Authorized service mechanics are trained in the proper technical and safety procedures to fix your Peterbilt vehicle right.

https://truckmanualshub.com/

WARNING! It is dangerous to work on a vehicle without the right know-how and proper tools. You could be badly injured, and you could damage the vehicle. Do only work you know you are fully capable of doing, and for which you have the right tools.

Brake Adjustment

WARNING! To prevent uncontrolled vehicle movement and reduce risk of personal injury, park the vehicle on a hard level surface, apply the parking brake, and chock all wheels securely.

To operate your vehicle safely and profitably, you need some understanding of its brake systems. For more on brakes, see the Index, under Brakes.

Brake adjustment and brake balance must be set carefully to (1) make the most efficient use of the forces available for braking and (2) allow equal stopping forces at all wheels.

CAUTION: The air brake system of this vehicle was configured for ONE of the following operations: tractor or truck, and complies with the respective portions of FMVSS 121. A tractor shall not be operated or configured as a truck, nor shall a truck be operated or configured as a tractor, without significant modifications to the air brake system in order to retain compliance with FMVSS 121. Contact your Peterbilt dealer for instructions.

Once a brake system is set to specifications, changing any one of its components or any combination of components may cause the system to not work as well. All parts have to work together to perform as they should. Any replacement components in your brake system should be exactly equal to the original components. Any changes from the original specifications can affect the whole system.

All of the following areas are interrelated and must conform to original specifications:

- Tire Size
- Cam Radius
- Wedge Angle
- Drum Radius
- Brake Linings
- Brake Chambers
- Slack Adjusters

https://truckmanualshub.com/

PART 8: MAINTENANCE AND SERVICE

WARNING! A nonconforming part in your brake system could cause an accident. Sizes and types are so related to one another that a seemingly unimportant change in one may result in a change in how well your brakes work for you on the road. If parts don't work together properly, you could lose control of your vehicle. Be sure any replacement parts in your brake system conform exactly to original specifications.

All vehicle operators should check their brakes regularly. Always adjust your brakes when they are cool.

Perform these checks & adjustments every 15,000 miles (24,000 km):

WARNING! Brake linings with a thickness below the specified minimum will have lining rivets exposed. Use of such linings can damage the brake drum and also reduce brake efficiency, which could cause an accident or system failure.

- Have brake linings inspected by a qualified mechanic for wear at least every 15,000 miles. In severe service or off-highway applications inspect the linings more frequently.
- Check the air system for leaks:

1. Build up air pressure in the system to the governor cut-out point.
2. Stop the engine.
3. Release the parking brakes (push in the yellow knob).
4. Watch the rate of air pressure drop. The rate of drop should not be more than 2 psi (14 kPa) per minute.
5. Now start the engine and build up the air pressure again.
6. Stop the engine. Ensure that the parking brakes are still released (i.e., the yellow knob is pushed in).
7. Fully apply the service brakes.
8. Watch the rate of air pressure drop registered by the air gauge. The rate of drop should not be more than 3 psi (21 kPa) per minute.
9. If you find excessive leakage, a leakage test should be made at the air line connections and at all air brake control units. To perform a leakage test, refer to the detailed instructions in the Peterbilt Maintenance Manual, or take your vehicle to an authorized Peterbilt dealer.

Readjust the brakes if pushrod travel reaches 1 3/4 inches (44.4 mm) for steer axle brakes or 2 inches (51 mm) for rear axle brakes [2 1/4 inches (57 mm) for Type 36 chambers] at 80 - 90 psi (550 - 620 kPa) application pressure.

https://truckmanualshub.com/

CAUTION: The brake adjuster alone does not ensure proper brake operation. Inspect all brake components. All brake components work together and must be checked periodically to ensure the brake system works properly. See the Peterbilt Master Maintenance Manual for more information on brake maintenance.

If you have manual slack adjusters:

- Adjust the slack adjuster until the brake is tight.
- Then back off two or three clicks until the shoes are just free. You can determine this by spinning the wheel or tapping on the drum and listening for a clear ringing sound.

Normal pushrod travel is about 1 to 1 3/8 inch front and rear after brakes have been properly adjusted.

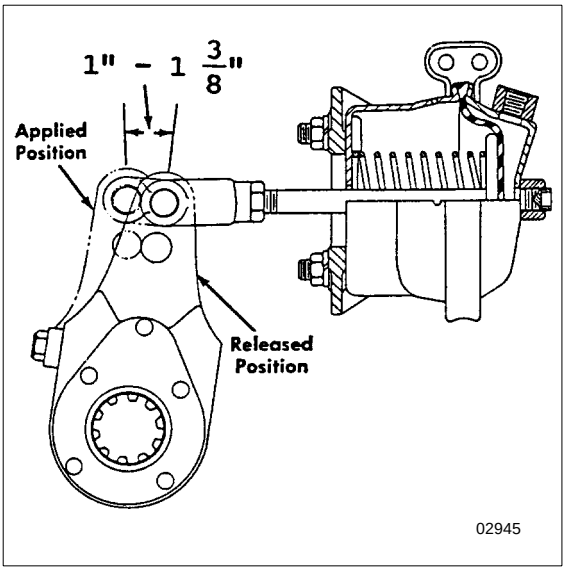

Correct Pushrod Travel

If you have automatic slack adjusters:

Constant manual adjustment of automatic slack adjusters can shorten the life of your internal clutch. If proper stroke cannot be maintained, replace the slack adjuster.

Operational Checks of Automatic Slack Adjusters

- Measure brake chamber stroke with the spring brake released and the air pressure at 100 psi (690 kPa) minimum. Correctly installed and functioning auto slack will produce the following strokes:

https://truckmanualshub.com/

-Type 36 chamber (rear brakes) should have a 1 1/2 inch to 2 1/4 inch (38 mm to 57 mm) stroke.

-Type 30 chamber (rear brakes) should have a 1 1/2 inch to 2 inch (38 mm to 51 mm) stroke.

-Type 16, 20, & 24 chambers (front brakes) should have a 1 inch to 1 3/4 inch (25.4 mm to 44.4 mm) stroke.

- If the stroke exceeds the above specifications, check to verify that the slack adjuster is working. With the air system at 100 psi (690 kPa) or more, apply the brake. If adjustment is necessary and the slack adjuster is working, the adjusting hex nut will rotate during the chamber return stroke. Installing a wrench on the hex nut will make this easier to see. On each stroke after the first, the amount of adjustment and chamber travel will be less.

Tires, Wheels, And Rims

Tires

Your tires are a very important part of your vehicle's whole braking system. How fast you can stop depends in large measure on how much friction you get between the road and your tires.

In addition, keeping your tires in good condition is essential to the safe, efficient operation of your vehicle. Regular, frequent inspection and the right care will give you the assurance of safe and reliable tire operation. Here are some tips on maintaining your tires.

WARNING! Underinflated tires could cause a serious accident. The extra heat caused by underinflation can cause sudden tire failure. Low pressure may affect control at the front wheels. You could be seriously hurt in an accident that could result. Keep your tires inflated to the manufacturer's recommended limit.

1. Underinflated Tires. Low pressure is a tire's worst enemy. Underinflation allows tires to flex improperly, causing high temperatures to build up. Heat causes early tire damage such as flex break, radial cracks, and ply separation. Low pressure may affect control of your vehicle, especially at the front wheels. Most tire wear problems are caused by underinflation as the result of slow leaks, so you'll want to check tire pressure regularly.

Checking Inflation Pressure

Give your tires a visual test every day, and check inflation with a gauge every week.

https://truckmanualshub.com/

WARNING! You can be badly injured trying to fix tires. Don't mount or dismount a tire yourself; have any wheel service performed by an expert. And stand away from the tire assembly while the expert is working.

- When checking tire pressure, inspect each tire for damage to sidewalls, cuts, cracks, uneven wear, rocks between duals, etc. If a tire appears underinflated, check for damage to the wheel assembly. Don't forget to check between dual wheels. If you find wheel damage, have an expert tire service repair it.
- Maximum tire pressure will be indicated on the sidewall of a tire.
- Check pressure only when the tires are cool. Warm or hot tires cause pressure buildup and will give you an inaccurate reading. So never deflate a warm tire to the specified pressure.
- Lower tire pressure does not give you more traction on ice or snow. This is an old myth that refuses to die. Underinflation actually reduces traction, steering control and tire load capacity.

2. Overloaded tires. Overloading your truck is as damaging to your tires as underinflation. The following chart shows how neglect or deliberate abuse can affect the life of your tires.

EFFECT OF LOAD PRESSURE ON TIRE LIFE

Vehicle Load	Normal	20% Over	40% Over	60% Over	80% Over	100% Over
Tire Pressure	Normal	20% Low	30% Low	35% Low	45% Low	55% Low
Expected Total Tire Mileage	Normal	70%	50%	40%	30%	25%

3. Overinflated tires. Too much air pressure reduces the tire tread contact area and results in rapid wear in the center of the tread.

WARNING! Overinflated tires can cause accidents. They wear more quickly than properly inflated tires. And they are more subject to punctures, cracks, & other damage. They could fail and cause you to lose control of your vehicle. Be sure all tires are inflated correctly according to the manufacturer's recommendations.

The chart on page 150 gives you the right load and inflation rates for different tire sizes. Please follow it for the safest and most economical use of your tires.

https://truckmanualshub.com/

4. Matching tires. Be sure to buy matched tires for your vehicle, especially on the rear axles. Mismatched tires can cause stress between axles and cause the temperature of your axle lubricant to get too hot. Matched tires will help your driveline last longer and will give you better tire mileage.

WARNING! Mismatched tires are dangerous. Mixing tire types may lessen the road-holding ability of both types of tires. You can lose control and be injured. Never mix tires of different design, such as steel belted radials and bias ply tires. Make sure, too, that you use the right size tires on each wheel. Some vehicles require different sizes on front and rear wheels. For safety, always use the recommended size and type of tires.

5. Replacing Tires.

Front: Replace front tires when less than 4/32 in. of tread remains. Check at three places equally spaced around the tire.

Drive Axles or Trailers: Replace tires on drive axles or trailers when less than 2/32 in. of tread depth remains in any major groove. Check at three places equally spaced around the tire.

See next illustration for recommended measuring points for tread depth:

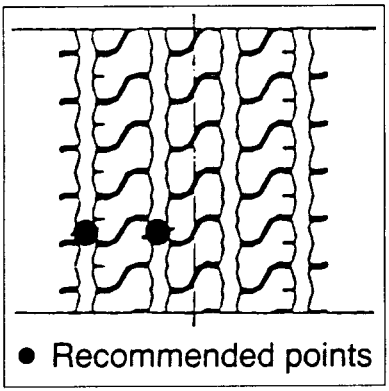

Steer Tire

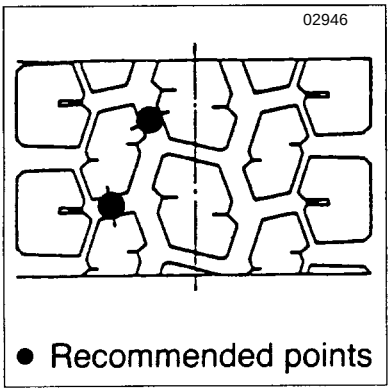

Drive Tire

WARNING! Regrooved tires or tires with reinforcement repairs can be dangerous on steering axles. They could cause you to lose control of your vehicle. Do not install regrooved or reinforcement-repaired tires on your steering axles.

https://truckmanualshub.com/

NOTE: To prolong your tires' life and make them safer, have their radial and lateral run-out checked at your dealer. And of course you should have your tires balanced any time you change a tire.

6. Tire chains. If you need tire chains, install them on both sides of each driving axle.

CAUTION: Chains on the tires of only one tandem axle can damage the driveline U-joints and the interaxle differential. Your repairs could be costly & time-consuming.

https://truckmanualshub.com/

Load Range Letters and Corresponding Ply Rating
(E = 10 ply; F - 12 ply; G - 14 ply; H - 16 ply)

SINGLE RADIAL TIRES FOR VEHICLES IN HIGHWAY SERVICE

Tire Size	Load Range	Tire Load Limits At Various Cold Inflation Pressures (psi)											
		70	75	80	85	90	95	100	105	110	115	120	125
11R22.5	G	4530	4770	4990	5220	5420	5640	5840	**6040**				
11R22.5	H	4530	4770	4990	5220	5430	5640	5840	6040	6240	6430	**6610**	
11R24.5	G	4820	5070	5310	5550	5780	6000	6210	**6430**				
11R24.5	H	4820	5070	5310	5550	5780	6000	6210	6430	6630	6240	**7030**	
275 / 70R22.5	E	4385	4580	**4765**									
275 / 70R22.5	F	4385	4580	4765	5010	5220	**5425**						
275 / 70R22.5	G	4385	4580	4765	5010	5220	5425	5630	5830	**6025**			
275 / 70R22.5	H	4385	4580	4765	5010	5220	5425	5630	5830	6025	6220	6410	**6600**
295 / 75R22.5	G	4500	4725	4945	5155	5370	5575	5780	5980	**6175**			
285 / 75R24.5	G	4545	4770	4990	5210	5420	5675	5835	6040	**6175**			

DUAL RADIAL TIRES FOR VEHICLES IN HIGHWAY SERVICE

11R22.5	G	4380	4580	4760	4950	5120	**5300**						
11R22.5	H	4380	4580	4760	4950	5120	5300	5470	5630	**5800**			
11R24.5	G	4660	4870	5070	5260	5450	**5640**						
11R24.5	H	4660	4870	5070	5260	5450	5640	5820	6000	**6170**			
275 / 70R22.5	E	**4335**											
275 / 70R22.5	F	4335	4560	4750	**4935**								
275 / 70R22.5	G	4335	4560	4750	4935	4095	4280	4420	**4540**				
275 / 70R22.5	H	4335	4560	4750	4935	4095	4280	4420	4540	4850	**5070**		
295 / 75R22.5	G	4500	4690	4885	5075	5260	5440	**5675**					
285 / 75R24.5	G	4540	4740	4930	5205	5310	5495	**5675**					

NOTE:

1. *Pressure listed is the minimum for the load.*
2. *All tire load figures are in pounds.*
3. *Figures in **Bold face** indicate maximum recommended load.*

Source: Bridgestone Tire

https://truckmanualshub.com/

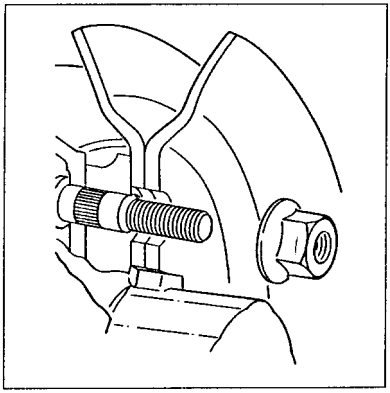

Hub Pilot Mount

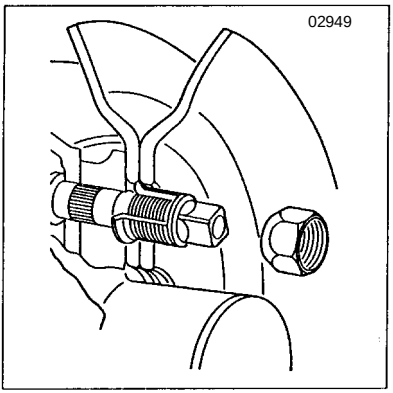

Ball Seat Mount

Hub, Drum, and Stud Assembly

The hub pilot mounting system uses M22x1.5 metric threads (about 7/8 in. dia.). The stud stands out at least 1.9 in. beyond the brake drum. All studs are right hand threads. Pilot bosses machined on the hub fit tightly to the wheel center bore.

The ball seat mounting uses 3/4 x 16 or 1-1/8 x 16 threads. The dual mounting studs provide 1.3 - 1.44 in. standout. Right hand and left hand threads are required. Inner and outer cap nuts center the wheels by seating against wheel ball seats.

Wheels

Pilot mount wheels have stud holes that are reamed straight through (no ball seats). Center bore diameter is 8-21/32 in. Budd Uni-Mount - 10 wheels have UNIMOUNT stamped on the disc.

Ball seat wheels have spherical chamfers machined on each stud hole. Center bore diameter is 8-23/32 in.

Wheel Nuts

Nut has a hex body and a flange for clamping against wheel face. Hex size is 33 mm (same as 1-5/16 in.).

Inner and outer cap nuts mate with spherical chamfers on wheels. Inner nut has 13/16 in. square end. Outer nut has 1-1/2 in. hex.

WARNING! Mismatched wheel components are dangerous. Equipment that does not exactly match original specifications or that is mismatched could cause your wheels to break and separate from the vehicle. The resulting accident could be very serious. Each mounting system is engineered for use only with its correct mating part. Be sure properly matched components are used for each type of mounting.

https://truckmanualshub.com/

Wheel Cap Nut Torque

At the first 100 miles, have all wheel cap nuts torqued to their specified value. After that, check wheel cap nuts at least once a week. Contact the Service Department at your dealership for information on the proper installation procedure for the wheels on your truck. This is a job you may not be able to do yourself. You need the right torquing equipment to do it.

Wheel Bearing Adjustment

For safe, reliable operation and adequate service life, your wheel bearings must be checked and adjusted properly. The person best equipped to do this is your authorized dealer's service mechanic.

Disc Wheels

To check the torque on disc wheels, follow the crisscross sequence below. See the Specifications chart for proper torque specification.

WARNING!

- ***Grooves in the wheel disc or other damage to the disc can lead to a serious accident. The disc will be weakened and can eventually come off, maybe causing you to lose control of your vehicle. Be sure to use the right components and the right tools.***
- ***The end of the wheel wrench must be smooth. Burrs on the end of the wrench can tear grooves in the disc, especially on aluminum wheels. These grooves may lead to cracks in the disc, and can cause it to fail.***

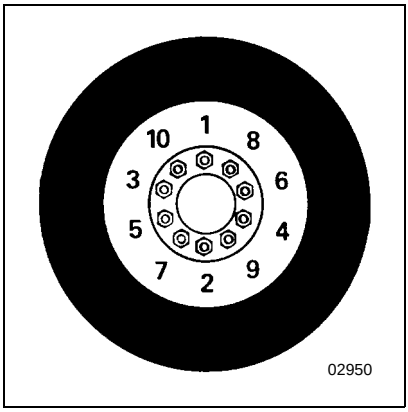

Crisscross Sequence For Disc Wheels

Demountable Rims

To check the torque on demountable rims, follow the crisscross sequence shown on the next page. See the Specifications chart for proper torque specification.

https://truckmanualshub.com/

WARNING! Use only components marketed by PACCAR Parts. Use of non–original equipment could cause wheel breakage and wheel separation from vehicle. Each mounting system is engineered only for use with its correct mating part. Be sure that properly matched components are used for each type of mounting. The comparison chart on page 142 illustrates the differences between parts used in hub–piloted mount and ball seat mount applications. Only PACCAR Parts supplied hub–piloted or ball–seat mounted wheels may be used on this vehicle.

- ***If you are not fully qualified and not equipped with the proper tools and equipment, do not attempt to raise the vehicle or remove or install the damaged tire and wheel assembly. Obtain expert help. A person can be seriously injured and/or damage can result from using the wrong service methods. Truck tires and wheels should be serviced only by trained personnel using proper equipment. Do not reinflate a tire that has been run flat or is seriously low on air without first removing the tire from the rim and inspecting for damage.***
- ***Follow OSHA regulations per section 1910.177.***
- ***Do not exceed the speed rating of tires. Exceeding the speed rating may result in sudden tire failure and loss of vehicle control.***
- ***Follow all warnings and cautions contained within the tire and wheel manufacturers literature.***
- ***Only properly trained personnel should service tire and rim assemblies***

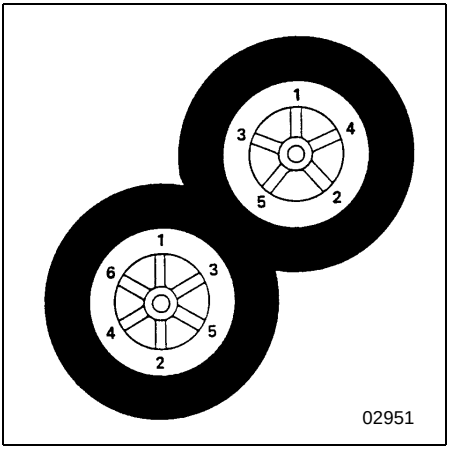

Crisscross Sequence For Demountable Rims

https://truckmanualshub.com/

CAP NUT TORQUE SPECIFICATIONS (R12/01)			
WHEEL AND NUT CONFIGURATION	STUD SIZE	TORQUES FOR INNER & OUTER CAP NUTS	
		Lb. Ft.	N.m
Stud-Piloted Disc Wheels	3/4”-16 Inner 1 1/8”-16 Outer	450-500	610-680
Heavy Duty Stud-Piloted Disc Wheels	15/16”-12 Inner 1 5/16”-12 Outer	750-900	1025-1225
PHP-10; Budd Uni-Mount-10; WHD-8	M22 x 1.5-6H	450-500	610-680
Cast Spoke Wheel Assembly		Rim Clamp Nut Torque	
	1/2” Dia.	80-90	110-120
	5/8” Dia.	160-185	220-250
	3/4” Dia.	225-245	305-335

Vehicle Loading

WARNING! The components of your vehicle are designed to provide satisfactory service if the vehicle is not loaded in excess of either the gross vehicle weight rating (GVWR) or the maximum front and rear gross axle weight ratings (GAWRs). Axle weight ratings are listed on the driver’s door edge. Supervise all loading to ensure that (1) the Gross Vehicle Weight Rating (GVWR) is not exceeded and (2) the load is distributed correctly so that the weight distribution is within the limits of the front and rear axle load ratings. Severe damage to your vehicle, difficult handling, or an accident could occur if your vehicle is not loaded properly.

GVW: GVW is the Gross Vehicle Weight. This is the TOTAL WEIGHT your vehicle is designed to carry. Never carry so heavy a load that you exceed the GVW rating of your Peterbilt vehicle.

Axle Weight: Your front and rear axles are rated according to the load they are designed to carry. You will find this number listed on the driver’s door frame.

Load Distribution: Be sure any load you carry is distributed so that no axle has to support more than its load limit.

https://truckmanualshub.com/

WARNING! An unevenly distributed load or a load too heavy over one axle can affect the braking and handling of your vehicle and cause an accident. Even if your load is under the legal limits, be sure it is distributed evenly.

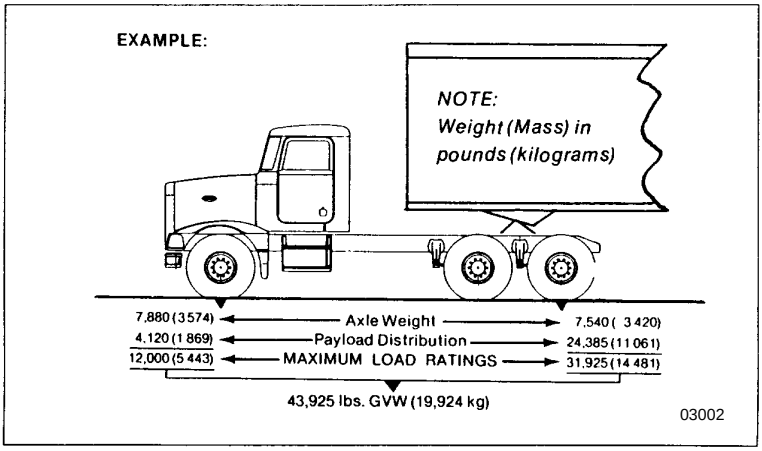

Example Of Weight Distribution

https://truckmanualshub.com/

PART 8: MAINTENANCE AND SERVICE

Your Vehicle's Air System

WARNING! Prior to the removal of any air system component, always block and hold the vehicle by a secure means other than the vehicle's own brakes. Depleting air system pressure may cause vehicle to roll. Keep hands away from chamber push rods and slack adjusters, they may apply as system pressure drops.

- ***After completing any repairs to the air system, always test for air leaks, and check the brakes for safe operation before putting the vehicle in service.***
- ***Never connect or disconnect a hose or line containing air pressure. It may whip as air escapes. Never remove a component or pipe plug unless you are certain all system pressure has been depleted.***
- ***Never exceed recommended air pressure and always wear safety glasses when working with air pressure. Never look into air jets or direct them at anyone.***
- ***Never attempt to disassemble a component until you have read and understood recommended procedures. Some components contain powerful springs and injury can result if not properly disassembled. Use only proper tools and observe all precautions pertaining to use of those tools.***

The operation of the vehicle's braking system and many vehicle accessories depends upon the storage and application of a high-pressure air supply.

Your vehicle's compressor takes outside air and compresses it, usually to 100-120 psi. The compressed air then goes to the reservoirs to be stored until needed. When you operate your air brakes, the stored compressed air flows into the chambers where it is used to apply your truck and trailer brakes. That is why, when you push down on your brake pedal, you don't feel the same amount of pressure on the pedal that you do when you apply the brakes on your car. All you are doing on your truck is opening an air valve to allow air to flow into the brake chambers.

Air Supply System

Contamination of the air supply system is the major cause of problems in air-operated components such as brake valves, wiper motors, and suspension height control valves. To keep contaminants to the lowest possible level, follow these maintenance procedures.

https://truckmanualshub.com/

WARNING! If the supply and service tanks are not drained at the recommended frequency, water could be sent to all air lines and valves. This could cause corrosion, which could compromise the brake system safety and potentially cause an accident.

Daily

- Drain moisture from the supply and service air tanks.
- Operate air devices to circulate lubricants within the unit.

Periodically

- Clean filter screens ahead of the valves by removing the screens and soaking them in solvent. Blow them dry with pressurized air before reinstalling them.

Twice a Year

- Add approximately 1/4 oz. (7.5 ml) of light viscosity lubricant to the air line leading to the wiper motor. Acceptable lubricants are Dow Corning 200 fluid, 200 CS viscosity, and Sprague Wiper Lube. If you have alcohol dryers installed in the air system, the alcohol can wash away lubricants from the wiper motors.

CAUTION: Don't use penetrating oil, brake fluid, or wax-based oils in the air system. These fluids may cause severe damage to air system components.

- Maintain the air compressor to prevent excessive oil by-pass. See your shop manual for maintenance details.
- Replace worn seals in valves and air motors as they are needed.

Air Dryer

NOTE: A small amount of oil in the system may be normal and should not, by itself, be considered reason to replace a desiccant cartridge; oil-stained desiccant can function adequately.

Every 900 operating hours or 30,000 miles/48,000 km or 3 months, check for moisture in the air brake system by opening reservoirs, drain cocks, or valves and checking for the presence of water. A tablespoon of water in a reservoir would point to the need for a desiccant cartridge change. However, the following should be considered first:

- Air usage is exceptionally high/abnormal for a highway vehicle. This may be due to accessory air demands or some other unusual air requirement that doesn't allow the compressor to load/unload in a normal fashion or it may be due to excessive leaks in the air system.

https://truckmanualshub.com/

- When more than a 30-degree F (17-degree C) range of temperature occurs in one day, small amounts of water can accumulate in the air brake system due to condensation. Under these conditions, the presence of small amounts of moisture is normal and should not be considered as an indication that the dryer is not performing properly.
- An outside air source may have been used to charge the air system, in which case this air did not pass through the drying bed.

Transmission And Drive Train

Clutch Adjustment

Clutch pedal free travel is usually 1 3/4 in. to 2 in. (34 to 51 mm). This should be your guide for determining whether your truck needs clutch adjustment. Some vehicles have automatic clutch adjustment. If yours doesn't have this feature, adjustment will have to be done by a trained certified mechanic. Have the adjustment done before clutch pedal free travel is reduced to the minimum allowable 1/2 in. (13 mm).

https://truckmanualshub.com/

Engine Cooling System

WARNING! Removing the radiator cap on a hot engine can cause scalding coolant to spray out and burn you badly. If the engine has been in operation within the previous 30 minutes, be very careful in removing the radiator cap. Protect face, hands, and arms against escaping fluid and steam by covering the cap with a large, thick rag. If you see any steam or coolant escaping, don't try to remove it until the radiator cools down. If you see nothing escaping, still remove the cap very slowly and carefully. Be ready to back off if any steam or coolant begins to escape.

What to Add to Your Cooling System

Water

Water must be clean & free of corrosive and scale-forming chemicals. Your drinking water may not be good for your vehicle. Approved additives help neutralize water's harmful effects on your cooling system. Ask your dealer to recommend the best ones for you.

If the cooling system in your truck has a treated spin-on water filter, install the service filter on all B checks. See the Preventive Maintenance Schedule in this manual. For more detailed recommendations check with the service department at your dealership or check the engine manufacturer's operation and maintenance manual.

If, in an emergency, the radiator was filled with water known to contain gypsum, sulfur, or chlorine:

1. Drain the cooling system as soon as possible.
2. Flush the system.
3. Replace the filters.
4. Refill with premixed coolant. Consult your maintenance manual for the correct filters to install.

Low Silicate Antifreeze

WARNING! Handle coolant and antifreeze carefully. Ethylene glycol antifreeze is poisonous. Store in original fluid container only, and always keep out of reach of children.

Always install a low silicate antifreeze. Premix your coolant to maintain the correct proportion of antifreeze and coolant conditioner chemicals. Install only enough low silicate antifreeze to provide the required protection against freezing.

The chart on the next page shows the temperature protection provided by low silicate ethylene glycol antifreeze in relation to the proportion mixed with water.

https://truckmanualshub.com/

Antifreeze (percent by volume)		0	10	20	30	40	50	53	57	60	68	70	80	90	100
Temp. Protec-tion	Deg C	0	-4	-9	-16	-24	-36	-40	-46	-53	-68	-65	-49	-35	-16
	Deg F	+32	+24	+16	+4	-12	-34	-40	-50	-63	-92	-85	-57	-31	+4

Antifreeze Mixture: A 53% mixture of low silicate antifreeze with 47% water is sufficient for year-round normal operation. This will normally protect your engine from freezing and boil-over. Note in the chart that 100% antifreeze is no more effective than a 30% mixture.

NOTE: Never exceed a 64/36 antifreeze/water mix ratio, it will increase the risk of silicate drop-out. Additionally, it may not increase antifreeze protection, and it could decrease it.

Some Tips about Additives:

- If you add supplemental coolant additives to your radiator, maintain them at the recommended levels. Read the label carefully. Too much additive could harm your vehicle.
- Antifreeze solutions containing antileak additives may quickly restrict your water filter. If this happens, your filter won't work. So stay away from antileak additives.
- Don't add rust inhibitors, radiator sealants, or water pump lubricants containing soluble oil to the coolant. These additives can cause the anticorrosion chemicals not to work.

Topping Up (For a Standard or Low Flow System)

With the engine cold, top up with premixed coolant. Add the coolant through the pressure cap neck on the surge tank or recovery bottle. The surge tank or recovery bottle is on top of the radiator, on the firewall, on the service module, or on the front of the cab. For the proper level, see illustration on next page.

CAUTION: Never install 100% antifreeze for top-up coolant. It could damage your vehicle.

NOTE: If frequent topping up is necessary and there are no visible signs of coolant leaks when the engine is cold, check for leaks with the engine operating at normal operating temperature.

Refilling Your Radiator

1. Be sure the radiator and engine block drains are closed.
2. Move the heater control to maximum heat position.

https://truckmanualshub.com/

3. Remove the surge tank pressure cap.

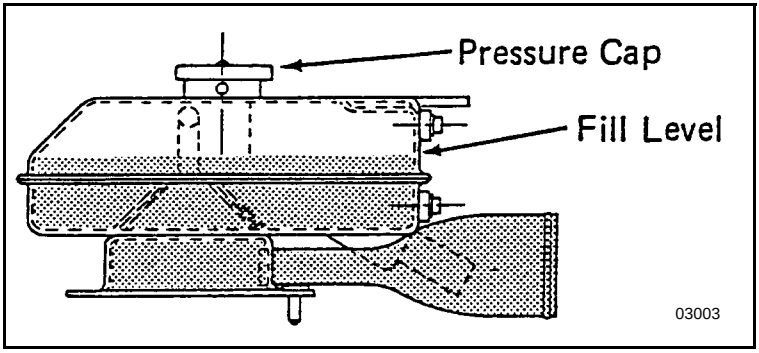

Surge Tank

4. Through the surge tank, fill the system with premixed coolant. Pour it in a steady flow until the radiator is full.
5. Start the engine.
6. Idle at low RPM.
7. Complete the filling. Do it as quickly as possible.
8. Idle the engine until it reaches normal operating temperature.
9. Fill the radiator as necessary to raise the coolant level to the proper Replace the surge tank pressure cap.

Check the coolant level after each trip when the engine has cooled. Add coolant as necessary. You may find your coolant level is not up to the correct level soon after you have filled the radiator. This may be because all the trapped air in the system has not yet been purged. It takes a little time for all the air to leave the system after you fill your radiator.

NOTE: Do not overfill a cooling system. Excess coolant may result in overflow, loss of antifreeze, and reduced corrosion protection. For a cold engine, the proper coolant level is 1 in. below the radiator cap seal. For an operating engine at normal temperature, coolant should be even with the radiator cap seal.

https://truckmanualshub.com/

Electrical

CAUTION: Do not modify or improperly repair the vehicle's electrical system or power distribution box. All electrical repairs should be performed by a qualified service technician. Improper repair or modifications will void your warranty and/or cause serious damage to your vehicle.

Battery Care

Regular attention to the charging system will help prolong the service life of your batteries. Here are some common causes of battery failure:

- Overcharge: This condition may result from improper voltage regulator adjustment. It results in overheating of the battery, warped plates, and evaporation of electrolyte.
- Undercharge: Your voltage regulator may be malfunctioning or is improperly adjusted, the drive belt is slipping, or your vehicle has undergone long periods of standing idle or short distance driving. These conditions result in battery plates becoming covered with a hard coating.
- Vibration: Loose battery hold-downs may cause battery plate failure.
- Short Circuits: These discharge a battery by draining electricity.
- Dirty or Loose Connections: Bad connections may stop the flow of electrical power to and from the battery.

Recharging Batteries

Except for using small trickle chargers to maintain battery condition, you should have your vehicle's batteries charged by a qualified service facility. To help reduce the risk of personal injuries, follow these guidelines carefully when recharging a battery:

WARNING! A battery contains gas that is explosive and flammable. It could injure you severely. A spark or flame near a battery on charge may cause it to explode with great force. Follow these guidelines carefully when recharging a battery:

- Before attempting any service in the electrical installation, disconnect the battery negative cable.
- Allow no sparks or open flame anywhere near the charging area.
- Charge a battery only in a well-ventilated area, such as outdoors or in a fully open garage which contains no pilot lights or other flames.

https://truckmanualshub.com/

WARNING! Always make sure the battery charger is OFF before connecting or disconnecting the cable clamps. Do not connect or disconnect charger cables while the charger is operating to reduce the danger of explosions.

- Always make sure the battery charger is OFF before connecting or disconnecting the cable clamps.

WARNING! Always shield your eyes and avoid leaning over the battery whenever possible.

- Use protective eyewear.

CAUTION: Never use a metallic funnel to add distilled water. It could come in contact with a terminal, creating a short circuit, resulting in severe injury or damage to your vehicle.

- Maintain the full level of electrolyte in the batteries. This reduces the volume of gas in the cells. The electrolyte level should always be between 0.4–0.6 in. (10–15mm) above plates. **Fill with distilled water only.** After distilled water has been added, wait at least a half hour to measure solution density (specific gravity). The specific gravity should be between 1.258–1.265 or the electrolyte level within “MIN” and “MAX” marks.
- Before attempting any work on the batteries or electrical system, remove all jewelry. If metal jewelry or other metal comes in contact with electrical circuits, a short circuit may occur causing you to be injured—plus electrical system failure and damage.
- To avoid short circuits and damage to yourself or the vehicle, never place metal tools or jumper cables on the battery or nearby. Metal that accidentally comes in contact with the positive battery terminal or any other metal on the vehicle (that is in contact with the positive terminal), could cause a short circuit or an explosion.
- Keep all batteries away from children

WARNING! Charger cables must be connected positive to positive (+ to +) and negative to negative (– to –). Reversing polarity can damage the electrical system.

- Never reverse battery poles.
- Battery terminals should not be coated with improper grease. Use petroleum jelly or commercially available, noncorrosive, nonconducting terminal coatings.
- Keep the battery clean and dry.

https://truckmanualshub.com/

- Look for any signs of damage.
- Battery acid that may spill during charging should be washed off with a solution of warm water and baking soda to neutralize the acid. If you accidentally get acid in your eyes or on your skin, immediately rinse with cold water for several minutes and call a doctor.
- Do not charge a frozen battery; allow it to thaw out first. And always allow the battery to thaw gradually—do not apply direct heat. Gas trapped in the ice may cause an explosion.
- Never attempt to place the vehicle in motion, or run the engine with batteries disconnected.
- When fast charging, remove the battery caps so pressure doesn't accumulate.
- Never use a fast charger as a booster to start the engine. This can seriously damage sensitive electronic components such as relays, radio, etc., as well as the battery charger. Fast charging a battery is dangerous and should only be attempted by a competent mechanic with the proper equipment.

Slow Battery Charging

NOTE: Follow the instructions that come with your battery charger. It is not necessary to remove the battery from the compartment.

1. Make sure the electrolyte level in each cell is between the "MIN" and "MAX" marks. If the fluid level is below the "MIN" mark, correct the condition.
2. Disconnect the battery cables.
3. Connect charger cables.
4. Start charging the battery at a rate not over 6 amperes. Normally, a battery should be charged at no more than 10 percent of its rated capacity.
5. After charging, turn OFF charger and disconnect charger cables.

Jump Starting Batteries

If your battery is discharged (dead), you may be able to start it by using energy from a good battery in another vehicle. This is termed "jump starting." Because of the various battery installations in optional electrical systems, Peterbilt does not recommend that you attempt to jump start your vehicle. If you have a battery problem, contact a Peterbilt Dealer or a reputable towing service. But if you are unable to do this, and must jump-start your vehicle, then ensure that you follow the precautions and instructions below.

https://truckmanualshub.com/

WARNING! Batteries contain acid that can burn and gasses that can explode. Ignoring safety procedures can cause you or others to be badly hurt.

- ***Never jump start a battery near fire, flames, or electrical sparks. Batteries generate explosive gases. Keep sparks, flame, and lighted cigarettes away from batteries***
- ***Do not allow battery fluid to contact eyes, skin, fabrics, or painted surfaces. Always wear eye protection. Battery acid that may spill during charging should be washed off with a solution of warm water and baking soda to neutralize the acid. If you accidentally get acid in your eyes or on your skin, immediately rinse with cold water for several minutes and call a doctor.***
- ***Be careful that metal tools or any metal in contact with the positive terminal do not contact the positive battery terminal and any other metal on the vehicle at the same time. Remove metal jewelry; avoid leaning over a battery. If metal jewelry or other metal comes in contact with electrical circuits, a short circuit may occur causing you to be injured—plus electrical system failure and damage to the vehicle.***
- ***Do not try to jump start or charge a frozen battery. (Even a battery with ice particles on the electrolyte surface is dangerous.) Allow it to thaw out first. And always allow battery to thaw gradually—do not apply direct heat. Gas trapped in the ice may cause an explosion.***
- ***Do not try to jump start a vehicle if the electrolyte level in the battery of either vehicle is low. Maintain the full level of electrolyte in the batteries. This reduces the volume of gas in the cells.***
- ***The voltage of the booster battery must have a 12–volt rating. And the capacity of the booster battery should not be lower than that of the discharged battery. Use of batteries of different voltage or substantially different capacity rating may cause an explosion. To avoid serious personal injury and damage to the vehicle, heed all warnings and instructions of the jumper cable manufacturer. The jumper cables must be long enough so that the vehicles do not touch.***
- ***Applying a higher voltage booster battery will cause expensive damage to sensitive electronic components, such as relays, and the radio. Improper hook–up of jumper cables or not following these procedures can damage the alternator or cause serious damage to both vehicles or yourself.***
- ***Battery posts, terminals, and related accessories contain lead and lead compounds, chemicals known to the State of California to cause cancer and reproductive harm. Wash hands after handling.***

https://truckmanualshub.com/

CAUTION: Departures from these procedures could also cause serious damage to both vehicles. Improper use of a booster battery to start a vehicle may cause an explosion.

To Jump Start Your Vehicle:

1. Wear eye protection and remove rings, metal watch bands, and any other metal jewelry.
2. Set the parking brakes. Place the transmissions of both vehicles in Neutral. Do not let the vehicles touch one another. Turn the ignition key to Off in the vehicle with the discharged battery. Also turn off lights, heater, and any other unnecessary electrical load.
3. If either battery has vent caps, remove them and check the fluid level. If it is OK, replace the caps before going further. If the level is low, add distilled water, and replace the caps before proceeding. If no water is available, remove the caps and cover the filler openings with a cloth before proceeding. After jump starting the vehicle, dispose of the cloth.

WARNING! If you do not cover the filler openings on the battery, electrolyte could boil out of the openings and hurt someone or damage the vehicle. Replace caps securely if there is enough fluid in the battery, or cover with a cloth if no water is available and your fluid is low.

4. Attach one end of a jumper cable to the dead battery's positive terminal. This will have a large red "+" or "P" on the battery case, post, or clamp. Attach the other end of the same cable to the positive terminal of the good battery.
5. Attach the remaining jumper cable FIRST to the negative battery terminal (black "-" or "N") of the good battery, and then to the chassis or ground of the vehicle being jump started.
6. Start the engine in the vehicle with the good battery. Let it run a few minutes. Then start the engine in the vehicle with the dead battery. If the engine fails to start, do not continue to crank the starter but contact the nearest Authorized Service Center.

WARNING! When disconnecting jumper cables, make sure they do not get caught in any moving parts in the engine compartment.

7. Reverse the above sequence exactly when removing the jumper cables. Take care that your first step is to remove the cable from the chassis or ground of the vehicle that was jump-started.

https://truckmanualshub.com/

Removing and Installing Batteries

CAUTION: Always reinstall the battery compartment cover (step) before entering the cab. Without the battery cover you could slip and fall, resulting in possible injury to yourself.

Whenever you have to install a battery or remove one, follow these guidelines for the safety of yourself and the battery.

- Ensure all switches on the vehicle are turned Off.
- Disconnect the ground cable first when removing a battery.
- Connect the ground cable last when installing a battery.

Fuel System

Location of Fuel Shut-off Valves: Fuel shut-off valves for the fuel crossover line are on the bottom of the secondary fuel tank, at the crossover line connection. They are optional on the primary fuel tank.

Specification: Use only diesel fuel as recommended by engine manufacturers.

WARNING! A mixture of gasoline or alcohol with diesel fuel in the presence of an ignition source (such as a cigarette) could cause an explosion. You could be seriously injured. Use only the recommended diesel fuel.

CAUTION: If anyone ever pours gasoline into your fuel tank, drain the entire system. Otherwise, the pump and engine will be damaged. Don't try to dilute the gasoline by adding diesel fuel (See Warning above).

Fuel Filters

Please follow these recommendations when you are changing your fuel filters or strainer elements. Your engine will run better and last longer if you do. See the engine manufacturer's recommendations for proper water and micron requirements.

1. When removing filters, cover any electrical equipment and wiring that might get soaked with fuel. Diesel fuel may permanently damage electrical insulation.
2. When installing spin-on (throwaway) filters, hand tighten them only to 1/2 to 2/3 turn after gasket contact. Mechanical tightening of these filters may distort or crack the filter head.

NOTE: To expel air from density-type strainer elements, soak them in clean fuel before installing them.

https://truckmanualshub.com/

3. When replacing a fuel filter element, don't use a substitute. Install only filter elements designed for fuel filtration. First clean and inspect the shell. Then insert the new element and fill the container at least 2/3 full of clean fuel before installing the shell.
4. Throw away old gaskets. Replace them with new ones to ensure a positive seal.
5. Position the shell and gasket properly. Then tighten the cover nut or bolt just enough to prevent fuel leakage.
6. After starting the engine, check for leaks around the filter.

Steering

WARNING! A steering system that is not working properly can cause an accident. You could lose control of your vehicle if the steering is not in good order. For driving safety, give your steering gear and components the following visual checks frequently. Check them especially after trips over rough roads.

Check:

- Tierod for straightness
- Draglink clamp for looseness or interference
- Ball joints and steering U-joints for looseness
- Steering wheel for excessive freeplay. Check the simplest probable causes first:

  -Unequal tire pressures

  -Loose cap nuts

  -Bent tierod

  -Loose wheel bearing

If these checks do not reveal the problem, or if you correct them and still have a steering problem, take your truck to an authorized dealer for evaluation.

Front End Alignment

For driving safety and comfort, and to prolong the life of your vehicle, it is important to have proper front end alignment. Check tire wear frequently. Uneven tire wear is a sign that your front end or rear axles may be misaligned.

If you see uneven wear, take your vehicle to a service center familiar with aligning front ends on Peterbilt vehicles.

https://truckmanualshub.com/

Rear Axle Alignment

Continual road shock and load stresses may force your rear axles out of alignment. If you detect rapid tire wear on the rear axles, you may have misaligned axles. If you suspect you do, have your rear axle alignment checked and adjusted by an authorized dealership.

U-Bolt Tension for Front and Rear Axles

It is important that U-bolts remain tight. Off-highway use of your vehicle will cause them to loosen faster. But all vehicles need to have their U-bolts checked and tightened regularly. Be sure someone with the proper training and the right tools checks and tightens the U-bolts on your Peterbilt. The proper torque requirements are specified in the Peterbilt Maintenance Manual for your vehicle.

WARNING! U-bolts that are too loose can cause an injury accident. Loose U-bolts can cause uneven tire wear, poor alignment, and loss of control of your vehicle. You probably can't tighten U-bolts correctly yourself. But be sure to have them checked and tightened regularly by an authorized mechanic.

- ***For on-highway vehicles, tighten the U-bolts after the first 15,000 miles (24,000 km). Then tighten them every 60,000 miles (96,000 km) after that.***
- ***For off-highway vehicles, tighten the U-bolts after the first day or two of operation. Then tighten them every 15,000 miles (24,000 km) after that.***

WARNING! Failure to maintain the specified torque values or to replace worn parts can cause component system failure, possibly resulting in an injury accident. Improperly tightened (loose) suspension U–bolts can lead to unsafe vehicle conditions, including: hard steering, axle misalignment, spring breakage or abnormal tire wear.

Frame Fastener Torque Specifications

Fastener Type	Fastener Size	Torque	
		Lb. ft.	N.m.
Bolt / Locknut / Hardened Washer	1/2 Inch	86 - 108	117 - 147
	5/8 Inch	130 - 163	176 - 221
	M12	65 - 85	89 -115
	M16	155 -195	210 - 264
	M20	495 - 605	668 - 818

CAUTION: When installing bolts on the frame, use only metric grade 10.9 bolts of the proper length.

https://truckmanualshub.com/

Standard Capscrew Torque Specifications

SAE Grade Number	5		8	
Capscrew Body Size (inches-thread)	Torque		Torque	
	Lb. ft.	N.m.	Lb. ft.	N.m.
1/4-20	6 - 9	8 - 12	9 - 12	12 - 16
-28	7 - 10	9.5 - 14	10 - 14	14 - 19
5/16-18	13 - 18	18 - 24	18 - 25	24 - 34
-24	14 - 20	19 - 27	20 - 28	27 - 38
3/8-16	22 - 32	30 - 43	31 - 44	42 - 60
-24	25 - 40	34 - 54	35 - 50	47 - 68
7/16-14	35 - 50	47 - 68	50 - 71	68 - 96
-20	39 - 56	53 - 76	56 - 80	76 - 108
1/2-13	54 - 77	73 - 104	76 - 109	103 - 149
-20	58 - 87	79 - 118	86 - 123	117 - 167
9/16-12	78 - 111	105 - 151	110 - 158	149 - 214
-18	87 - 124	118 - 168	123 - 176	167 - 239
5/8-11	108 - 154	147 - 209	153 - 218	208 - 296
-18	122 - 174	166 - 236	173 - 247	235 - 335
3/4-10	192 - 273	260 - 370	271 - 386	367 - 523
-16	214 - 305	290 - 414	303 - 431	411 - 583
7/8-9	309 - 441	419 - 598	437 - 624	593 - 846
-14	341 - 486	462 - 659	482 - 589	654 - 799
1 -8	464 - 662	629 - 898	656 - 935	889 - 1268
1-12	508 - 724	689 - 982	718 - 1023	973 - 1386

The torque values in the previous tables are based on the use of clean and dry threads.

For standard capscrews:

1. Always use the torque values listed the capscrew table.
2. Reduce torque by 10% when engine oil is used as a lubricant.
3. Reduce torque by 20% if new plated capscrews are used.

Frame Fasteners

1. Go around your vehicle as per the Preventive Maintenance Schedule and tighten all frame fasteners with a torque wrench.
2. Always use the torque values listed in frame fastener table.
3. Always torque fasteners from the nut end.

https://truckmanualshub.com/

Engine Accessories

Accessory Drive Belts

You can extend the reliability and service life of your vehicle's drive belts with proper attention to installation, adjustment, and maintenance. Neglect could cause belt failure. The result could be the loss of the electrical or air system as well as possible engine damage from overheating. So it's a very good idea to check your belts frequently and replace them as soon as you detect trouble.

Follow the procedure below to install an accessory drive belt:

1. Loosen the pulley bracket(s) and shorten the distance between the pulley centers. Install the new belt without forcing it. Do not roll or pry the belt over the pulley.

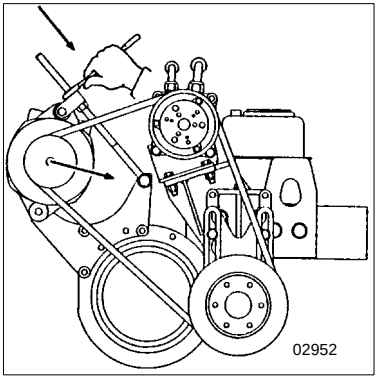

Pulley Brackets

2. Check the pulley alignment and adjustment if necessary. Pulley misalignment must not be more than 1/16 in. for each 12 inches of belt free span (1.5 mm for each 300 mm of belt free span). Belt free span is measured between pulley centers.
3. Check the riding depth. Belt riding depth should not vary more than 1/16 in. (1.5 mm) on match belt sets.
4. Check that the belt does not ride on the bottom of the pulley groove, and that the outside edge of the belt does not stick out more than 1/16 in. (1.5 mm) beyond the outside edge of the pulley.

Belt Tension

NOTE: Engines equipped with poly-vee belts are equipped with tensioners and therefore require no belt adjustments.

Alternator drive belts (all widths), new or used, should be adjusted to 105-125 pounds (467-566 N.) of tension.

https://truckmanualshub.com/

The best method of testing belt tension is to apply a good quality commercial gauge. If a tension gauge is not available, use this method of testing:

- Apply 25 pounds (111 N.) of force midway between the pulleys.
- Deflection should be one belt thickness for each foot of distance between the pulley centers.

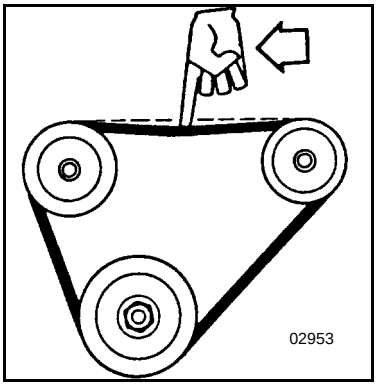

Tension Test

Retensioning New Belts

A belt is considered “used” after 30 minutes of operation.

New belts will loosen after running for an hour or more. Check for proper tension after the first period of operation. If the belt can be deflected 1/8 in. (3 mm) more than specified above, tighten according to the section above on belt tension. Do not tighten belts beyond specified limits. Damage to bearings and the belts may occur.

Fan Clutch / Fan

WARNING! Thermatic fans engage suddenly without warning and can hurt you badly. Stay away from the fan when the engine is running.

To Check Your Fan:

1. Check the fan assembly mounting bolts for tightness. Inspect the blades for damage.
2. Check the clutch operation by starting the engine when it is cold. Then idle it at about 800 RPM. Listen for air leaks. Check that the fan is not working while the engine is warming. When the clutch engages, note the reading on the vehicle’s panel-mounted coolant temperature gauge. If the fan clutch engages at low engine temperature or cycles on and off more frequently than it should (receives “false signals”), have the problem corrected at your dealership.

https://truckmanualshub.com/

Air Intake System

Engine heat, vibration, and age combine to loosen air intake connections and cause cracks in the tubing and elbows. Leaks in the intake system allow abrasive dust to enter the engine and quickly cause expensive damage. During your daily walk-around inspection, carefully check all tubing, elbows, clamps, supports, and fasteners for condition and tightness.

Under normal operating conditions, we recommend complete disassembly and cleaning of the air intake system annually.

Under severe operating conditions, such as heavy off-highway use, the disassembly and cleaning should be more frequent. Replace any defective parts. With the possible exception of mounting brackets, don't repair defective parts.

Air Cleaners

The following service information is basic to all air cleaner makes and models.

Service the air cleaner filter elements as specified in the Preventive Maintenance Schedule. If your vehicle is equipped with an optional air inlet restriction indicator, service the filter elements when the air inlet restriction indicator locks in the extreme Up position. Paper elements require care and proper handling because they are critical to engine service life.

Turbocharger

When servicing the air intake and exhaust systems on a turbocharged engine, check the following. If you detect any deficiencies, take the vehicle to an authorized dealer for servicing. Delay could lead to severe and expensive damage to your vehicle.

- Lubricating System. Check the oil lines, housing, and connections. Look for leaks, damage, or deterioration. Leaks could mean you have damaged oil lines or oil seals.
- Manifold. With the engine operating, check for leaking manifold or flange gaskets.
- High Frequency Vibration. Vibration may indicate turbo rotor imbalance. Have your dealer investigate this immediately.

WARNING! Do not operate engine with turbocharger intake piping disconnected. Working around a turbocharger with the intake piping removed can be dangerous. A suction is created when the engine is running. This suction could draw your hand or anything else near it into the impeller fan. You cold be seriously injured. Always keep the intake piping connected when you will be running the engine.

https://truckmanualshub.com/

Exhaust System

Details of inspection and maintenance of your exhaust system are covered below, under Noise Control System. Check the Index for page reference.

Anti-lock Braking System (ABS)

For details of use and maintenance of your anti-lock system, see the anti-lock braking system service literature that came with your truck.

Below are some general notes on repairing your anti-lock braking system:

- The foundation brake system must be in proper working order to ensure the best ABS performance.
- Before welding anywhere on the vehicle, detach the ABS ECU connector and all other electronic control units.
- Never detach the ECU connector with the ignition turned on.
- Do not attempt to repair ABS/ASR/ATC electrical cables that are outside the vehicle. Replace faulty cables as an assembly.
- When servicing brakes, hubs, or axle, recoat the ABS sensors with anti-seize compound. Make sure the sensor is pushed against the pulse wheel after the hub is reinstalled. On rear axles, the sensor should be pushed fully into the mounting block before reinstalling the hub.
- Check ABS wiring harnesses and piping periodically for chafing or other problems. No regular maintenance is required on the ABS components.
- During wheel balancing, dyno testing, or any time the ignition is on with part of the ABS disconnected, a failure code will be recorded. After servicing or testing of the vehicle is completed, clear the failure codes.

If, due to operating conditions, a brake application causes either wheel on the same axle to begin skidding, wheel speed sensors immediately signal the anti-lock controller in the modulator assembly. The controller responds instantly by signaling the solenoids in the modulator which activate the air valves, reducing application pressure as needed to prevent the wheels from locking up. If this over-riding correction is effective, application pressure is allowed to build up to the original input.

Any malfunction of the anti-lock system on one or more axles will cause the system to fail-safe, and the panel-mounted amber warning light will come on, indicating both a malfunction, and automatic shutdown of the system. If the air system is intact (indicated by the pressure gauges), the service brakes will continue to function normally, but without benefit of the anti-lock feature.

https://truckmanualshub.com/

WARNING! Although the brakes will continue to operate with a malfunction in either circuit, the vehicle should not be operated until the system is repaired, and both braking circuits, including all pneumatic and mechanical components, are working properly.

CAUTION: Do not attempt to recycle the anti-lock system until the vehicle has been brought to a full stop.

NOTE: If one wheel on any driven axle continues to slip or spin for approximately 4 seconds, this will cause the anti-lock controller for that axle to go into the fail-safe mode, and the warning light will give a shutdown signal. In this case, the anti-lock system can be turned back on, and the warning light extinguished, by turning the key switch OFF and ON, after the vehicle has been brought to a full stop. When the key switch is turned back on, the warning light will illuminate and remain on for 3 to 5 seconds. This is a built-in function test of the warning light.

Cab Heater-Air Conditioner

The combination heater-air conditioner provides comfort for those in the cab through accurate control of the cab environment in all weather conditions. Regular attention will help you keep your unit running well.

NOTE: Keep the engine exhaust system and the vehicle's cab/sleeper ventilation system properly maintained. It is recommended that the vehicle's exhaust system and cab/sleeper be inspected

- By a competent technician every 15,000 miles
- Whenever a change is noticed in the sound of the exhaust system
- Whenever the exhaust system, underbody, cab or sleeper is damaged

NOTE: To allow for proper operation of the vehicle ventilation system

- *keep the inlet grille at the base of the windshield clear of snow, ice, leaves and other obstructions at all times.*
- *keep the exhaust pipe area clear to help reduce the buildup of exhaust gases under the vehicle.*

Perform the following checks every 3 months or 30,000 miles / 48,000 km, whichever occurs first:

Heater

- Check all heater controls for full-range operation.

https://truckmanualshub.com/

- Check hoses, connections, and heater core for condition and leaks.
- Check the drain pan of the fresh air vent for trapped water before assuming that there is a leak in the heating system.
- If the heater core is leaking, take the vehicle to a Peterbilt dealer for proper heater service or repair.
- Check the heater core for debris blocking the air flow. If the blower is functioning properly, yet the heater is not operating properly, the heater core may be clogged. Clean the heater core if necessary. If the condition persists, take the vehicle to a Peterbilt dealer for proper heater service or repair.

Air Conditioner

WARNING! The air conditioning system is under pressure. If not handled properly, it could explode, causing injury to you and your vehicle. Any servicing that requires depressurizing and recharging the air conditioning system must be conducted by a qualified technician with the right facilities to do the job.

NOTE: Engines equipped with poly-vee belts are equipped with tensioners. No belt adjustments can be made. Replace a poly-vee belt when the indicator on the tensioner is no longer within the recommended (green) range.

- Check the compressor belt for condition and proper tension. Adjust 105 - 125 pounds.
- Check the compressor and drive clutch for noise and vibration. If you find problems, have the system checked thoroughly. A malfunctioning clutch usually indicates trouble elsewhere in the system.
- Check the evaporator core and condenser core for debris restricting air flow. Clean if necessary. Small particles may be removed with compressed air blown through the core in the opposite direction of normal air flow.

CAUTION: Small particles blown by compressed air could injure your eyes. Wear eye protection any time you blow compressed air.

- Check all hoses for kinks, deterioration, chafing, and leaks. Adjust kinked or chafing hoses to eliminate restrictions and prevent further wear.
- On tilt-cab vehicles, verify that hoses are routed around the pivot point so that lifting the cab does not strain them.

https://truckmanualshub.com/

- Check all components and connections for refrigerant leaks. If you discover a leak, don't try to tighten a connection. Tightening a connection may cause a worse leak. Have a qualified technician correct the problem.

NOTE: A leaking evaporator or condenser core cannot be repaired; it must be replaced.

- Have the air conditioning system fully inspected annually by your dealer.

Special Precautions

WARNING! Excessive heat may cause your air conditioning system to explode. Never weld, solder, steam clean, or use a blow torch near any part of the air conditioning system. If a refrigerant leak develops in the presence of excessive heat or an open flame, hazardous gases may be generated. These gases may cause unconsciousness or death. If the system is leaking refrigerant:

- ***Stay away from the hot engine until the exhaust manifold has cooled.***
- ***Don't permit any open flame in the area. Even a match or a cigarette lighter may generate a hazardous quantity of phosgene gas.***
- ***Don't smoke in the area. Inhaling gaseous refrigerant through a cigarette may cause violent illness.***

Appearance

Painted Surfaces

CAUTION: Do not aim the water jet directly at door locks or hatch. Tape the key holes to prevent water from seeping into the lock cylinders. Water in lock cylinders should be removed with compressed air. To prevent locks from freezing in the winter, squirt glycerin or lock deicer into the lock cylinders.

- Wash frequently to remove grime and caustic deposits that may stain the finish. Apply cool or lukewarm water. You may want to use a mild soap.
- Avoid washing your vehicle in bright sunlight.

WARNING! Handle cleaning agents carefully. Cleaning agents may be poisonous. Keep them out of the reach of children.

https://truckmanualshub.com/

- Road tar may be removed with a special commercial tar remover or mineral spirits.
- Waxing offers added protection against staining and oxidation. But to allow enough time for your truck's finish to cure, wait about ninety days after the date of manufacture before waxing. Don't wax in the hot sun. Don't friction burn the paint with a buffing machine.

Aluminum and Chrome Surfaces

- Clean aluminum wheels and bumpers with warm water.
- Tar remover will get rid of heavy deposits of road grime.
- To prevent spotting, wipe aluminum surfaces dry after washing.
- Under corrosive conditions, such as driving on salted roads, clean aluminum parts with steam or high pressure water from a hose. A mild soap solution will help. Rinse thoroughly.
- Chrome surfaces are best cleaned with fresh water. Wipe dry to preserve their luster. A commercial chrome cleaner will remove light rust. After cleaning, wax flat surfaces and apply a thin coat of rust preventive lubricant around bolts or other fasteners.

Stainless Steel

To clean and restore the finish of stainless steel components:

1. In a plastic pail mix 4 tsp of alum (a powder found in grocery stores or drugstores), with 32 oz. of water (warm water will dissolve alum faster, but cool will work).
2. Apply the alum/water solution with a pad of steel wool (0000 grade or finer). GENTLY wipe the component lengthwise; no pressure is necessary.
3. It is the chemical reaction between the carbon steel of the wool and the alum solution which cleans the stainless, not the scrubbing of abrasive action of application.
4. You may also use any stainless cleaner recommended for cleaning boat parts.

Interior

- Wipe vinyl upholstery and lining with a good commercial upholstery cleaner. Do not use acetone or lacquer thinner.
- Clean fabric upholstery with upholstery shampoo specially formulated for this purpose. Follow instructions on the container.

Weatherstripping

Occasionally spray weatherstripping on doors and windows with silicone compound to help preserve resiliency. This is especially useful in freezing weather to prevent doors and windows from sticking shut with ice.

https://truckmanualshub.com/

Chassis

Hose dirt and grime from the entire chassis. Then if an oil leak develops, you will be able to detect it easier.

Noise Control System

Noise Emission Warranty

Peterbilt Motors Company warrants to the first person who purchases this vehicle for purposes other than resale and to each subsequent purchaser that this vehicle, as manufactured by Peterbilt Motors Company, was designed, built and equipped to conform at the time it left Peterbilt's control with all applicable U.S. EPA Noise Control Regulations.

This warranty covers this vehicle as designed, built and equipped by Peterbilt, and is not limited to any particular part, component or system of the vehicle manufactured by Peterbilt. Defects in design, assembly or in any part, component or system of the vehicle as manufactured by Peterbilt, which at the time it left Peterbilt's control caused noise emissions to exceed Federal standards, are covered by this warranty for the life of the vehicle.

Tampering with Noise Control System Prohibited

Federal law prohibits the following acts or the causing thereof:

(1) The removal or rendering inoperative by any person other than for maintenance, repair, or replacement, of any device or element of design incorporated into any new vehicle for the purpose of noise control prior to its sale or delivery to the ultimate purchaser or while it is in use, or (2) the operation of the vehicle after such device or element of design has been removed or rendered inoperative by any person.

Among those acts presumed to constitute tampering are

Noise Insulating Blankets

- Removing noise insulators from engine block or from around the oil pan.
- Cutting holes in, or cutting away part of, noise insulators.
- Removing hood-mounted noise insulation.

Engine Electronic Control Unit (ECU)

- Modifying ECU parameters.

Engine Cooling System

- Removing or rendering inoperative the fan clutch.
- Removing the fan shroud.

Air Intake System

- Removing or rendering inoperative the air cleaner / silencers or intake piping.

https://truckmanualshub.com/

Exhaust System

- Removing or rendering inoperative the exhaust system components.
- Inner Fender Shields and Cab Skirts
- Removing shields or skirts.
- Cutting away parts of shields, skirts or damaged or loose portions of shields or skirts.

Fuel System

- Removing or rendering engine speed governor inoperative, allowing engine speed to exceed manufacturer's specifications.
- Removing air signal attenuator on engines equipped with this device.

Inspection & Maintenance Instructions for Noise Control System

The following instructions are based on regular inspection of the noise control system. If, during regular inspection or maintenance of other systems or components, you find something wrong with parts of the noise control system, inspect those parts more frequently to be sure they are performing up to specification.

At the end of this section you will find the Maintenance Log. This is a schedule of inspection and maintenance intervals for each component.

Exhaust System

- Manifold

  Check for exhaust leaks and condition of gaskets. Replace any blown gaskets. Use a torque wrench to check all cap-screws, including those at the flanges. Refer to the engine manufacturer's service manual for proper tightening sequence and torque values.

- Joints and Clamps

  Check for leaks, and tighten as necessary. Check for deterioration or dents in pipes and clamps which could allow exhaust to escape.

  On tilt-cab units, check exhaust balljoint for condition and proper fit.

- Piping

Check for rust, corrosion, and damage. If piping is perforated at any point, temporary patching or lagging is acceptable until you can have permanent repairs made. On turbocharged engines check joints at the flanges and mounting brackets for tightness.

- Mufflers

Check clamps and mounting brackets for security. Check internal baffling for security. You can do this by listening for rattling sounds while tapping the muffler with a rubber mallet or revving the engine up and

https://truckmanualshub.com/

down through its normal operating range. Check muffler for rust and corrosion.

- Exhaust Tail Pipe(s)

Check the mounting security. Tighten as necessary. The miter cut at the tip of the pipe must be facing the rear of the truck. Do not modify the end of the pipe in any way.

Fan Shroud

WARNING! The engine fan can engage at any time without warning. Anyone near the fan when it turns on could be badly injured. Before turning on the ignition, be sure that no one is near the fan. Do not work on the fan with the engine running.

Check all fasteners for tightness. Check for stress cracks in the shroud. Make sure the shroud is adjusted so that it does not touch the fan blades.

Hood Insulation Blanket

Fasteners: Check all fasteners for condition and security. Repair or replace any broken or defective fasteners.

Blanket: Check for chafing, tears, etc. Patch it if necessary. Find the cause of the damage. If any component or accessory is causing wear or damage and can't be relocated, put reinforcing pads on the blanket at the site of wear.

Engine Mounted Noise Insulators

Fasteners: Check for condition and security. How you do this will depend on the method of attaching the noise insulators on the engine and around the oil pan (bolts, snap fasteners, or straps). Tighten loose fasteners; repair or replace any worn or damaged fasteners.

Insulators: Check insulators around fasteners and stress points, especially where they may be affected by engine vibration. Repair any cracked or damaged mounting points. Use suitable reinforcing plates to ensure that the insulators will remain in position.

Inner Fender Shields and Cab Skirts

Fasteners: Check all fasteners for security, especially the self-tapping hex head screws. Remove and replace any loose rivets.

Shields and Skirts: Check shields and skirts for cracks at mounting and stress points. Check fender shields for tire marks, worn spots, or damage from objects thrown from tire treads. You can repair cracked or damaged fiberglass fender shields with fiberglass and resin.

If you find damage at a fastening point, you can gain additional strength by installing a suitable reinforcing plate. This plate should be drilled to accept a rivet and laminated to the shield with fiberglass and resin.

https://truckmanualshub.com/

Check cab skirts, sills, and brackets for overall condition and repair them as necessary. Damaged rubber fender shields or cab skirting cannot be repaired. You will need to replace it.

Your authorized dealership can perform all of these checks and repairs or replacements.

Air Intake System

Do all checks and maintenance chores listed in this manual under Engine Air Intake System and Air Cleaner (See Index). Check the induction tubing, elbow connections, clamps, brackets, and fasteners for deterioration, cracks, and security. If you find an air leak anywhere between the air cleaner and the engine, repair that leak immediately.

CAUTION: Air leaks cause excessive noise and may result in serious damage to the engine. If you do not repair them the engine damage won't be covered by your warranty. Repair all air leaks as soon as you find them.

https://truckmanualshub.com/

NOISE CONTROL SYSTEM MAINTENANCE LOG

COMPONENT	RECOMMENDED INTERVAL (MILES)	DATE & R.O. NUMBER	REPAIR FACILITY & LOCATION	WORK PERFORMED	DATE & R.O. NUMBER	REPAIR FACILITY & LOCATION	WORK PERFORMED
EXHAUST SYSTEM-ROUTING INTEGRITY	25,000						
MUFFLER INTERNAL BAFFLES	250,000						
SHUTTERS SHROUDS	25,000						
HOOD INSULATION BLANKET	10,000						
ENGINE-MOUNTED HOSE INSULATORS FASTENERS	10,000						
INNER FENDER SHIELDS	50,000						
CAB SKIRT FASTENERS	50,000						
AIR INTAKE SYSTEM INTEG-RITY ELEMENT	5,000						
CLUTCH-TYPE FAN DRIVE	10,000						

https://truckmanualshub.com/

PART 9: VEHICLE IDENTIFICATION NUMBERS

Each vehicle completed by Peterbilt Motors Company uses a Vehicle Identification Number (VIN) that contains the model year designation of your Peterbilt. The practice is in compliance with 49 CFR 565, Code of Federal Regulations.

The Vehicle Identification Number is on the brass Peterbilt name plate and also on the foil labels on the left hand door post. The VIN contains 17 digits. The 10th digit is the code for the model year of your vehicle. The example VIN below from a 1999 model shows how this code works:

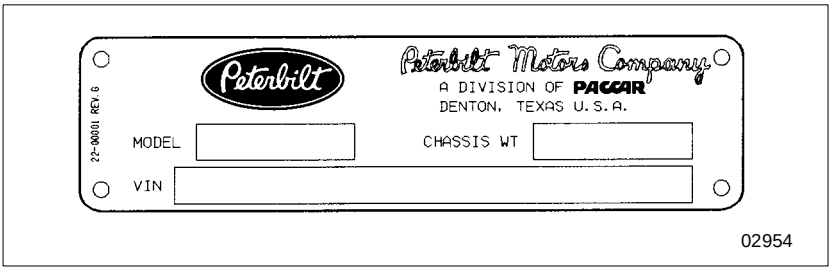

EXAMPLE VIN: 1XP 9D2X9 6 X D 345678

Model Year — X

Plant Code — D

Serial Number — 345678

X = 1999	Y = 2000	D = Denton Factory
1 = 2001	2 = 2002	N = Nashville Factory
3 = 2003	4 = 2004	
5 = 2005	6 = 2006	
7 = 2007	8 = 2008	
9 = 2009		
0 (zero) = Glider Kit		

https://truckmanualshub.com/

PART 10: CONSUMER INFORMATION

WARNING! Diesel engine exhaust and some of its constituents are known to the State of California to cause cancer, birth defects, and other reproductive harm. Other chemicals in this vehicle are also known to the State of California to cause cancer, birth defects or other reproductive harm. This warning requirement is mandated by California law (Proposition 65) and does not result from any change in the manner in which Peterbilt trucks are manufactured.

Federal Safety Standard Certification Label

The National Highway Traffic Safety Administration regulations require a label certifying compliance with Federal Safety Standards, for United States and U.S. Territories, be affixed to each motor vehicle and prescribe where such label may be located.

This certification label, which indicates the date of manufacture and other pertinent information, is located on the left hand cab door post.

02955

How To Order Parts

When you need replacement parts for your Peterbilt vehicles, contact your nearest authorized Peterbilt dealer, who may be located from the “Peterbilt Authorized U.S. and Canadian Dealers” listing (Cat. No. 5212).

When you order, it is IMPORTANT than you have the following information ready:

- Your name and address.
- Serial number of the truck.
- The name of the part you need.
- The name and number of the component for which the part is required.
- The quantity of parts you need.
- How you want your order shipped.

https://truckmanualshub.com/

PART 10: CONSUMER INFORMATION

The National Highway Traffic Safety Administration requires that the following information be included in the owner's manual of motor vehicles manufactured after September 1, 1990:

NHTSA Consumer Information

If you believe that your vehicle has a defect which could cause a crash or could cause injury or death, you should immediately inform the National Highway Traffic Safety Administration (NHTSA) in addition to notifying Peterbilt Motors Company.

If NHTSA receives similar complaints, it may open an investigation, and if it finds that a safety defect exists in a group of vehicles, it may order a recall and remedy campaign. However, NHTSA cannot get involved in individual problems between you, your dealer, and Peterbilt Motors Company.

To contact NHTSA, you may either call the Auto Safety Hotline toll-free at 1-800-424-9393 (366-0123 in Washington, D.C.) or write to: Administrator, NHTSA, 400 Seventh Street, S.W., Washington, D.C. 20590. You can also get other information about auto safety from the Hotline.

Environmental Protection

WARNING! Diesel engine exhaust and some of its constituents are known to the State of California to cause cancer, birth defects, and other reproductive harm. Other chemicals in this vehicle are also known to the State of California to cause cancer, birth defects or other reproductive harm. This warning requirement is mandated by California law (Proposition 65) and does not result from any change in the manner in which Peterbilt trucks are manufactured.

Some of the ingredients in engine oil, hydraulic oil, transmission and axle oil, engine coolant, diesel fuel, air conditioning refrigerant (R12, R134a, and PAG oil), batteries, etc., may contaminate the environment if spilled or not disposed of properly. Contact your local government agency for information concerning proper disposal.

https://truckmanualshub.com/

PART 11: SUBJECT INDEX

A
Antifreeze 159
Anti-lock brakes 93
Appearance 177
Appliances in the Cab 58
B
Battery
  compartment cover 167
  electrolyte 163
  recharging 163
  slow battery charging 164
Brake
  operation 93
Brake system
  truck & tractor 93
C
Cab Tilting 10–11
Cap Nut Torque Specifications 154
Cleaning the vehicle 177
Coasting 110
Consumer Information 186
Controls
  Air Horn 21
  Air Suspension Deflate Switch (Dump Valve) 31
  Brakesaver 36
  Cigarette Lighter 46
  Cruise Control Switch 33
  Digital Message Center 35
  Dome Light Switch 29
  Electric Horn 22, 24
  Engine Fan Switch 32
  Fifth Wheel Lock (Slider Adjustment) Switch 39
  Fog Lights Switch 29
  Hand Throttle Control 27
  Hazard Flasher 21
  Headlights 27
  Heater-Air Conditioning Controls 41
  High Beam Headlights 22
  ID and Clearance Lights Switch 28
  Interaxle Differential Lock Switch 38
  Jacobs Engine Brake or Cummins "C" Brake Switch 37
  Manual Override 26
  Mirror Heat Switch 34
  Panel Light Knob 28
  Parking Brake Valve and Trailer Air Supply Valve 40
  Power Mirror Switch 34
  Starter Button 26
  Tilt- Telescoping Steering Column 24
  Trailer Brake Hand Valve 23
  Turn Signal and Indicator Lights 20
  Two-Speed Rear Axle (Range) Switch 38
  VARASHIELD® Wind Deflector Switch 39
  Windshield Wipers and Washers 30

https://truckmanualshub.com/

PART 11: SUBJECT INDEX

Cooling system
  coolant change 159
  temperature 52
D
Dash
  COE 18–19
  Conventional 16–17
Defogging/defrosting system 45
Descending a grade 110
Door lock 177
Driver's Checklist 76
Driving
  vehicle inspection 76
E
Economical driving 110
Electrical system
  batteries 162, 163
  battery charging 164
  jumper cables 165
Electrolyte 163
Engine
  overspeed 111
  temperature 52
  winterfronts 83
Engine Warmup 82
Environmental Protection 186
Exhaust fumes 112
F
Federal motor vehicle safety standards 4
Federal Safety Standard Certification Label 185
G
Gauges and Displays 48
  Air Application Gauge 49
  Air Filter Restriction Indicator or Gauge 57
  Ammeter 56
  Drive Axle Temperature Gauge 55
  Dual Air Pressure Gauge (Air Reservoir) 50
  Engine Oil Pressure Gauge 51
  Fuel Gauge 53
  Manifold Pressure Gauge 56
  Pyrometer 56
  Speedometer / Odometer 48
  Tachometer 49
  Transmission Temperature Gauge 55
  Trip Odometer 48
  Warning Lights and Buzzers
    COE 54
    Conventional 53
  Water Temperature Gauge 51
Glove Compartment 47
GVWR - gross vehicle weight rating 154
H
Heater and air conditioner 45
Hood Tilting 9

https://truckmanualshub.com/

J
Jumper cables 165
K
Keys 6
Keys and Locks
  Ignition Switch 25
L
Lubrication
  Axle 139–140
  coasting 110
  Steering Gear 142
  Transmission 134–138
  types and brands 131
  Universal Joint 141
  Wheel Bearing 141
Lubrication Index 132
Luggage Compartment(s) 58
M
Maintenance Schedule 112
Mirrors 57
N
Noise Control System 179
P
Parking brake
  brake system, operation 91, 98
  use 112
R
Restraint Systems 63
  Airbag System 72
  Inspection 69
  Komfort-Lok® Feature 66
  Shoulder Belt 64
  Sleeper Bunk Restraints 67
  Tether Belts 68
S
Safe vehicle operation 76
Safety precautions, maintenance 112
Safety stands 112
Seat 63
Seat adjustment 63
Servicing Specific Systems 142
  Air Intake System 173
  Air System 156
  Anti-lock Braking System (ABS) 174
  Brake Adjustment 143
  Cab Heater-Air Conditioner 175
  Electrical 162
  Engine Accessories 171
  Engine Cooling System 159
  Frame Fastener Torque Specifications 169
  Steering 168
  Tires, Wheels, And Rims 146
  Transmission And Drive Train 158

https://truckmanualshub.com/

PART 11: SUBJECT INDEX

Shifting gears 110, 111
Standard Capscrew Torque Specifications 170
Starting and Operating 80
  Anti-Lock Braking System 92
  Automatic And Automated Transmissions 91
  Auxiliary Transmission 92
  Bobtail Brake Proportioning System 96
  Brake Safety and Emergency 96
  Digital Message Center 95
  Driving Bobtail or with an Unloaded Trailer 103
  Driving With Deflated Air Springs 109
  Dual Range (Two Speed) Axles 89
  Idling the Engine 84
  If Your Vehicle Must Be Towed 92
  Interaxle Differential 87
  Manually Releasing Spring Brakes 99
  Operating the Clutch 85
  Overheated Brakes 97
  Parking Brakes and Their Use 97
  Pyrometer 103
  Retarders 91, 102
  Setting Ride Height 106
  Shifting The Transmission 85
  Starting Procedure
    Cold Temperature 81
    Normal Temperature 80
  Stopping The Engine 104
  Trailer Air Supply Valve 99
T
Tachometer 111
Transmission
  lubrication 134
  warmup 84
U
UltraSleeper
  Bunk 60
  Refrigerator 59
  Table 58
V
Vehicle
  driving 76
Vehicle Identification Number 184
Vehicle inspections 76
Vehicle weight rating 154
W
Wheels and tires
  replacement 153
Windshield washer reservoir 30
Numerics
49 CFR 565, Code of Federal Regulations 184

https://truckmanualshub.com/

NOTES

https://truckmanualshub.com/

NOTES

https://truckmanualshub.com/

Other Publications

Order either of the two publications shown below through your Peterbilt dealer. There is a charge for each. Allow four weeks for delivery.

Custom Maintenance Manual

This manual contains both proprietary and supplier service information specifically compiled for the components on your vehicle.

The material in this manual is the same as that used by Peterbilt dealers. It includes inspection, maintenance, overhaul, and troubleshooting procedures.

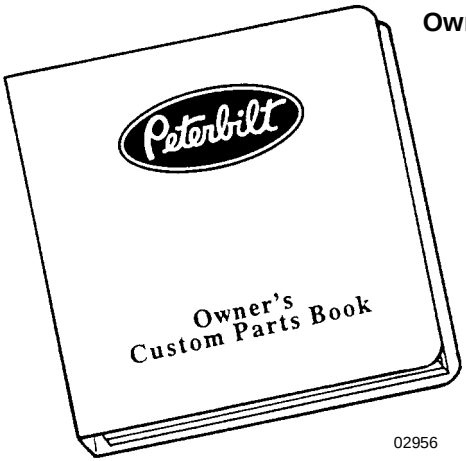

02956

Owner's Custom Parts Book

This book is a complete, unillustrated, computer-generated list of the parts used to custom-build your Peterbilt vehicle. Please provide your Chassis Serial Number when ordering.

https://truckmanualshub.com/

Peterbilt Motors Company
P.O. Box 90208
Denton, Texas 76202

A DIVISION OF PACCAR