https://truckmanualshub.com/

Isuzu

4HK-1 and 6HK-1

ENGINE

FUEL SYSTEM

CE APPLICATIONS

Revised 8/29/06 **Form Number 5137**

https://truckmanualshub.com/

Table Of Contents

Isuzu 4HK-1 and 6HK-1 Engine Overview

The Tier III CX330 Excavators are equipped with an Isuzu 6HK-1 model common rail fuel system Engine. The Isuzu 4HK-1 model will be used in at least one other Excavator model. These engines have 4 valves per cylinder, operated by a single overhead cam to optimize air flow, fuel economy and emissions. The injector is now located at the center of the piston under the valve cover. The fuel system is now totally electronically controlled. These engines use an water cooled Exhaust Gas Recirculation, (EGR) system, which allows a controlled amount of exhaust gas to return back to the intake. This EGR system is used to reduce the emissions level of the engine. These engines also use an air to air aftercooling intake air system. The air to air intake system ports pressurized air flow between the turbocharger and the intake manifold through an air to air heat exchanger in front of the radiator. The 4HK-1 model has a displacement of 317 cubic inches (in^3) or 5193 cubic centimeters (cc). The 6HK-1 model has a displacement of 475 cubic inches (in^3) or 7790- cubic centimeters (cc).

The ECM calculates the basic injection amount based on the signals from throttle position sensor, boost pressure sensor, crank position sensor, cam position sensor, etc. It regulates the opening/closing period of common rail pressure control valve and the electric activation of each injector according to the common rail pressure, engine coolant temperature, etc. at this time, to correct the optimum injection timing and injection amount.

At engine start (after the key switch is turned to the START position to start the engine, and until the return of the key switch to the ON position), the fuel injection quantity is controlled based on information from the start signal, engine speed, and engine coolant temperature. At low temperature, the fuel injection quantity increases. When the engine starts completely, this boosted quantity mode at starting is cancelled and normal running mode is restored.

The ECM calculates the current altitude based on the barometric pressure sensor signal. It corrects the fuel flow according to the altitude etc. at this time.

The Excavator machine controller communicates with the engine controller (ECM) via the CAN Data Bus system to control engine speed, return to idle command, activate the work modes and also to set the engine speed required for the breaker mode.

Engine Performance Needs

1. Air
2. Compression
3. Fuel

Isuzu 4HK-1 and 6HK-1 Engine Overview

The electronic control system for the Isuzu 4HK-1 and 6HK-1 Engines use input information from a number of sensors and from the Excavator controller to determine the quantity and timing of the fuel delivery to the engine.
The engine control module (ECM), is located on the inside rear of the cab. The ECM has two connectors, one an 81 pin and one 40 pin, for inputs and outputs. The engine control module requires downloading of control software to give it the ability to control all functions.

Inputs to 40 pin engine harness connector:

- The common rail fuel pressure sensor has 3 wires and is located on the common rail. This sensor detects the fuel pressure in the common rail, converts the pressure into a voltage signal, and sends the signal to the ECM. Higher common rail pressure provides higher fuel pressure sensor voltage while lower pressure provides lower fuel pressure sensor voltage.

- The 2 wire variable resistor fuel temperature sensor is installed on the fuel supply pump. The fuel temperature sensor measures the temperature of the drain fuel from the pump. When the fuel temperature sensor is cold, the sensor resistance is high. When the fuel temperature increases, the sensor resistance decreases. With high sensor resistance, the ECM detects a high voltage on the signal circuit. With lower sensor resistance, the ECM detects a lower voltage on the signal circuit.

Fuel Temp. (°C)	Fuel Temp. (°F)	Ohms Ω	Fuel Temp. (°C)	Fuel Temp. (°F)	Ohms Ω
140	284	75	40	104	1,150
120	248	111	20	68	2,450
100	212	184	0	32	5,740
80	176	318	-20	-4	15,000
60	140	584	-40	-40	45,770

- The 2 wire engine coolant temperature sensor is located on the thermostat housing at the right front corner of the engine. The coolant sensor's temperature detection component uses a thermistor. A 5 volt reference voltage is applied at all times to the sensor from the ECM. The ECM detects a voltage change due to a resistance value change in the sensor caused by the coolant temperature change.

Coolant Temp. (°C)	Coolant Temp. (°F)	Ohms Ω	Coolant Temp. (°C)	Coolant Temp. (°F)	Ohms Ω
140	284	76	40	104	1,161
120	248	118	20	68	2,500
100	212	190	0	32	5,773
80	176	325	-20	-4	15,216
60	140	591	-40	-40	47,365

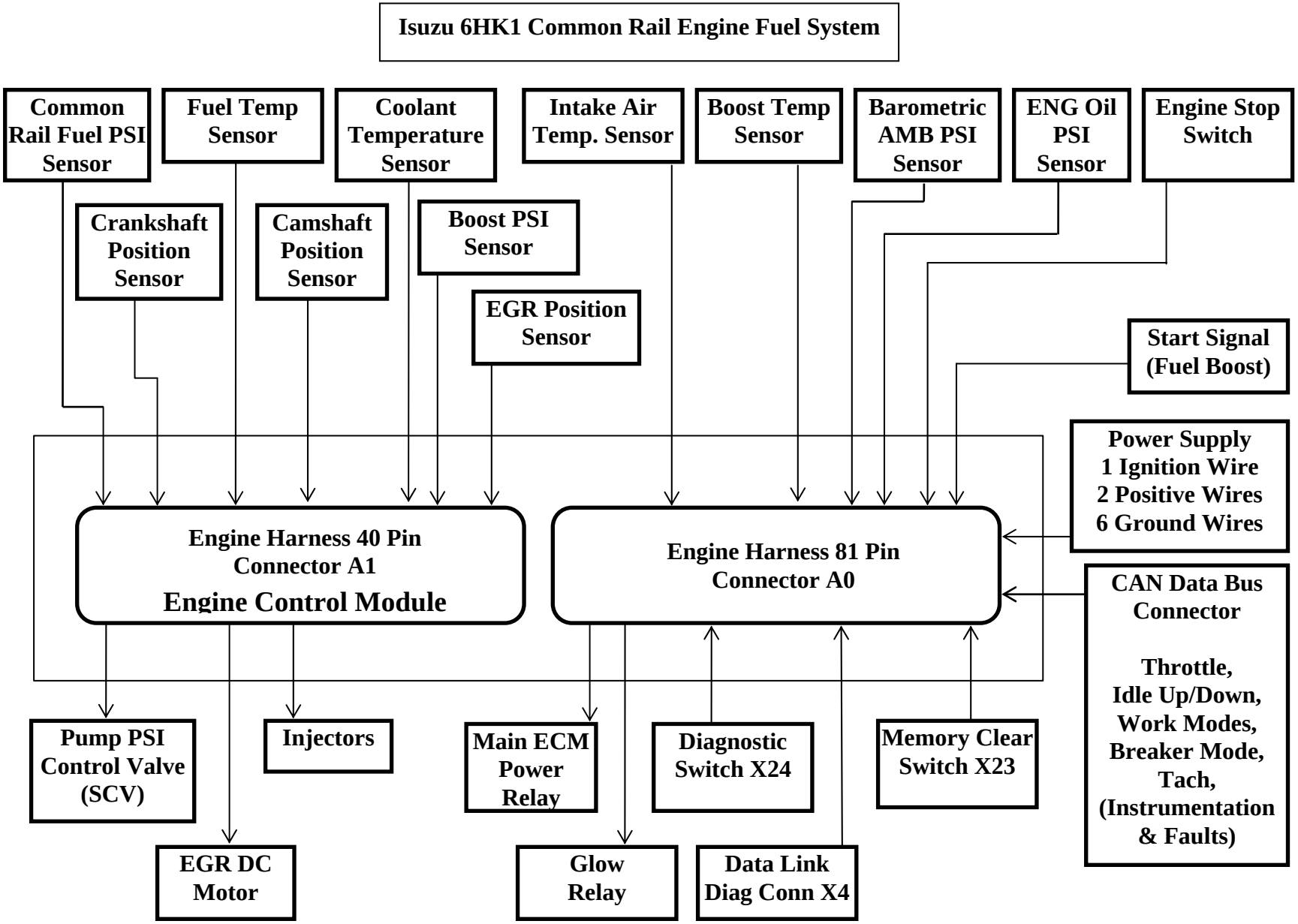
Isuzu 6HK1 Common Rail Engine Fuel System
Common Rail Fuel PSI Sensor
Fuel Temp Sensor
Coolant Temperature Sensor
Intake Air Temp. Sensor
Boost Temp Sensor
Barometric AMB PSI Sensor
ENG Oil PSI Sensor
Engine Stop Switch
Crankshaft Position Sensor
Camshaft Position Sensor
Boost PSI Sensor
EGR Position Sensor
Start Signal (Fuel Boost)
Power Supply
1 Ignition Wire
2 Positive Wires
6 Ground Wires
Engine Harness 40 Pin Connector A1
Engine Control Module
Engine Harness 81 Pin Connector A0
CAN Data Bus Connector
Throttle, Idle Up/Down, Work Modes, Breaker Mode, Tach, (Instrumentation & Faults)
Pump PSI Control Valve (SCV)
Injectors
Main ECM Power Relay
Diagnostic Switch X24
Memory Clear Switch X23
EGR DC Motor
Glow Relay
Data Link Diag Conn X4

Isuzu 4HK-1 and 6HK-1 Engine Overview (continued)

Inputs to 40 pin engine harness connector(continued):

- The 2 wire crankshaft position sensor (CKP) is located on the flywheel housing at the left rear corner of the engine. The CKP sensor detects 45 projections equally spaced every 7.5° around the flywheel periphery. There is also a space (equal to 3 projections) to act as a top dead center (TDC) reference signal for the engine control module (ECM). With these 45 pulses and the TDC reference signal, the ECM calculates the engine speed and exact position of the crankshaft.

- The 2 wire camshaft position sensor (CMP) is located on the cylinder head at the rear of the camshaft gear. The camshaft position sensor detects a total of the number of the cylinders in the engine plus an extra one. The extra hole indicates the top dead center position of number 1 cylinder. Five through holes (four holes arranged equally every 90° on the gear and one reference hole) on the camshaft gear flange surface on the 4HK-1 Engine. Seven through holes (six holes arranged equally every 60° on the gear and one reference hole) on the camshaft gear flange surface on the 6HK-1 Engine. The camshaft position sensor indicates the rotational position of the camshaft to the ECM. The CMP signal input, determines the crank angle and the ECM can use it to control fuel injection and calculate the engine speed. The crankshaft position sensor (CKP) typically controls these functions, however it is done by CMP sensor if the CKP sensor is faulty.

Diagnostic aid

If there is relevant Error Code to the crankshaft (CKP) sensor and Camshaft (CMP) sensor, the engine will not start until memory clear is performed.
If an intermittent trouble is suspected, the following may be the cause:

- Improper connection of harness connector
- Defective harness routing
- Worn harness cover
- Wire disconnection inside harness cover

- The 3 wire boost pressure sensor is located in the piping to the intake manifold of the engine. The sensor converts the boost pressure into the voltage signal and sends it to engine control module (ECM). The ECM should detect a higher signal voltage at a high boost pressure.

- The 4 wire Exhaust Gas Recirculation (EGR) position sensor is installed in EGR valve and detects the valve lift amount of EGR.

  Note:
  Do not disassemble the EGR position sensor. If it is faulty, replace it as EGR valve assembly.

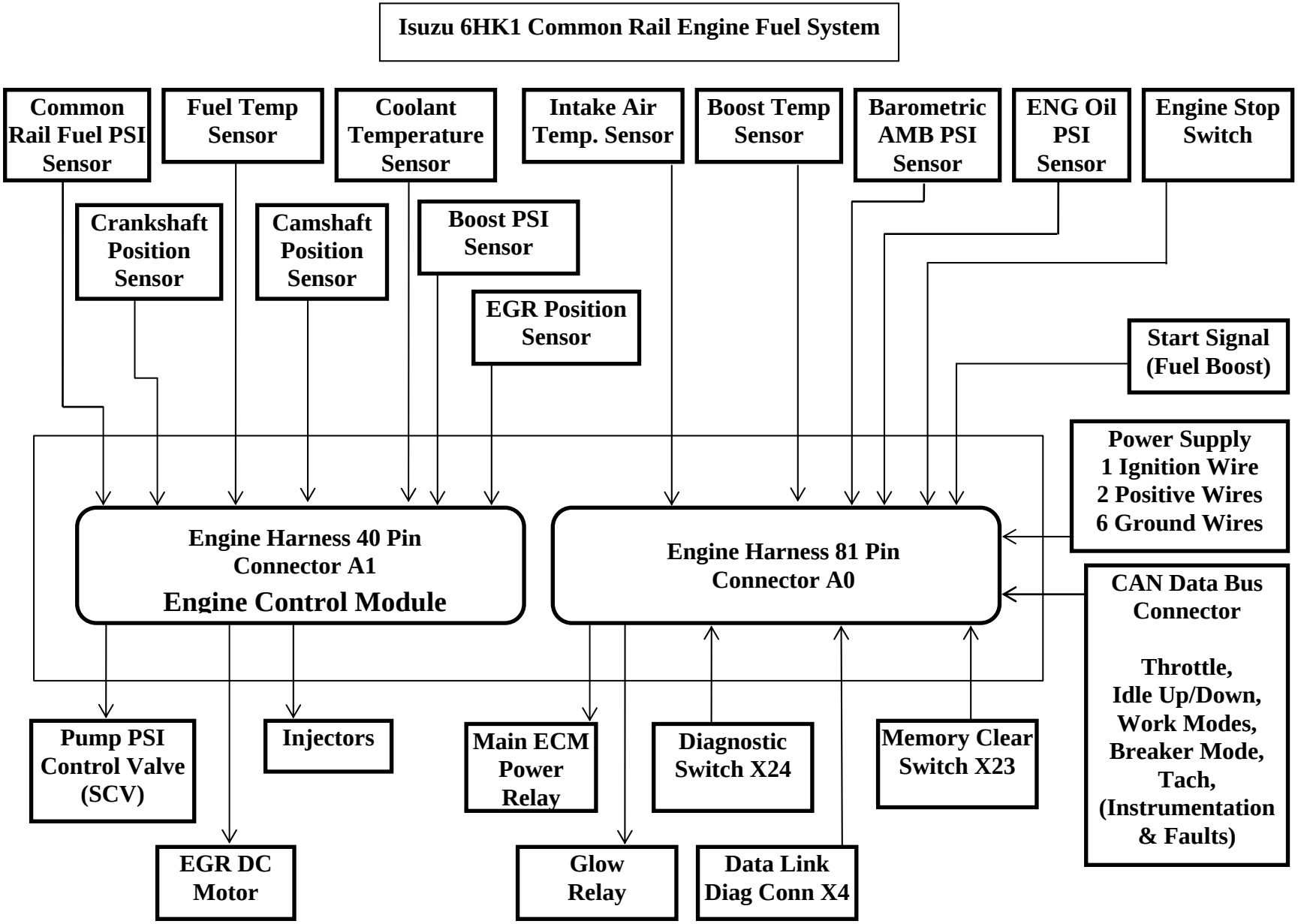
Isuzu 6HK1 Common Rail Engine Fuel System
Common Rail Fuel PSI Sensor
Fuel Temp Sensor
Coolant Temperature Sensor
Intake Air Temp. Sensor
Boost Temp Sensor
Barometric AMB PSI Sensor
ENG Oil PSI Sensor
Engine Stop Switch
Crankshaft Position Sensor
Camshaft Position Sensor
Boost PSI Sensor
EGR Position Sensor
Start Signal (Fuel Boost)
Power Supply
1 Ignition Wire
2 Positive Wires
6 Ground Wires
Engine Harness 40 Pin Connector A1
Engine Control Module
Engine Harness 81 Pin Connector A0
CAN Data Bus Connector
Throttle, Idle Up/Down, Work Modes, Breaker Mode, Tach, (Instrumentation & Faults)
Pump PSI Control Valve (SCV)
Injectors
Main ECM Power Relay
Diagnostic Switch X24
Memory Clear Switch X23
EGR DC Motor
Glow Relay
Data Link Diag Conn X4

Isuzu 4HK-1 and 6HK-1 Engine Overview (continued)

Inputs to 81 pin engine harness connector:

- The 2 wire intake air temperature (IAT) sensor is installed on intake air tube and detects the temperature of intake air for optimum fuel injection control.

- The 2 wire boost temperature sensor is installed onto the EGR valve on the upstream side of intake manifold. The sensor is a thermistor type. The resistance in the sensor changes as the temperature changes. When the intake temperature sensor is cold, the sensor resistance is high. When the intake temperature increases, the sensor resistance decreases. With high sensor resistance, the ECM detects a high voltage on the signal circuit. With lower sensor resistance, the ECM detects a lower voltage on the signal circuit.

- The 3 wire barometric pressure sensor is installed on the machine and converts the ambient barometric pressure into a voltage signal. The ECM calculates barometric pressure by this voltage signal and corrects the fuel injection amount (high-altitude correction) as the machine works at a higher elevation.

- The 3 wire engine oil pressure sensor is located on the left side of the engine just below and forward of the high pressure injection pump.

- An engine emergency stop signal is sent from the machine controller to the engine controller. The machine controller receives an engine stop signal from the stop switch located in the instrument cluster.

- As the engine is started (after the key switch is turned to the START position to start the engine, and until the return of the key switch to the ON position), optimum fuel injection quantity is delivered based on information from the starter switch signal, engine speed, and the engine coolant temperature sensor (ECT). At low temperature, the fuel injection quantity increases. As the engine starts completely, this boosted quantity mode at starting is cancelled and normal running mode is restored.

- Power Supply – Ignition power is sent to the engine control module (ECM) any time that the key switch is in the run position. When the ignition signal is present, the ECM activates the main relay. Once the Main Relay (K33 on machine schematic) is activated, battery power is fed to the ECM through the relay normally open (NO) contact to pins number 2 and 6. When the key switch is turned to the off position, the ECM continues to hold the main relay activated for a period of time to allow the ECM to power down safely. This delay is about 10 seconds. The ECM has six ground connections in total.

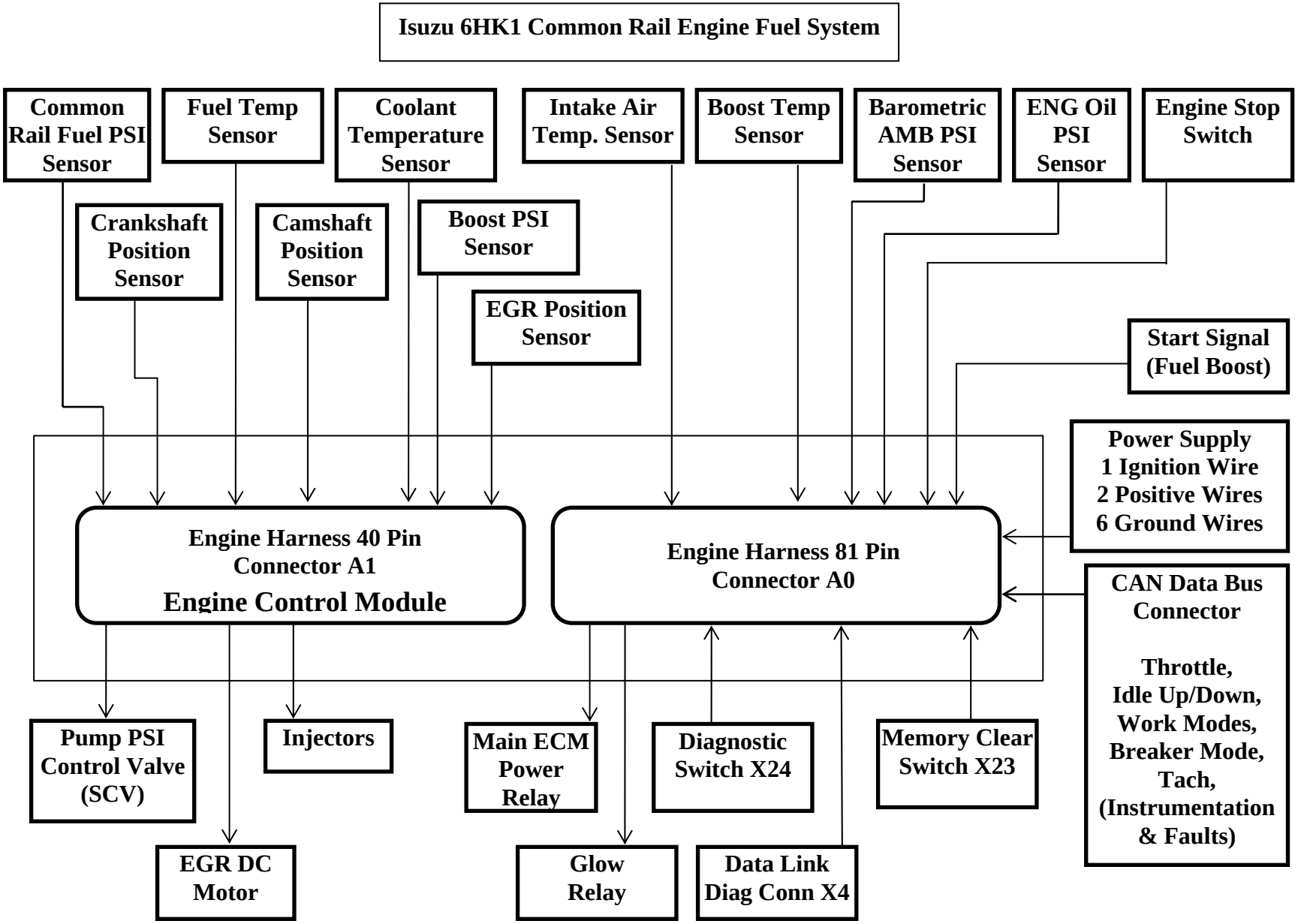
Isuzu 6HK1 Common Rail Engine Fuel System
Common Rail Fuel PSI Sensor
Fuel Temp Sensor
Coolant Temperature Sensor
Intake Air Temp. Sensor
Boost Temp Sensor
Barometric AMB PSI Sensor
ENG Oil PSI Sensor
Engine Stop Switch
Crankshaft Position Sensor
Camshaft Position Sensor
Boost PSI Sensor
EGR Position Sensor
Start Signal (Fuel Boost)
Power Supply
1 Ignition Wire
2 Positive Wires
6 Ground Wires
Engine Harness 40 Pin Connector A1
Engine Control Module
Engine Harness 81 Pin Connector A0
CAN Data Bus Connector
Throttle, Idle Up/Down, Work Modes, Breaker Mode, Tach, (Instrumentation & Faults)
Pump PSI Control Valve (SCV)
Injectors
Main ECM Power Relay
Diagnostic Switch X24
Memory Clear Switch X23
EGR DC Motor
Glow Relay
Data Link Diag Conn X4

Isuzu 4HK-1 and 6HK-1 Engine Overview (continued)

Inputs to 81 pin engine harness connector: (continued)

- The CAN (Controller Area Network) Data Bus Connector transmits communication between the engine controller and the Excavator controller. This connector transmits throttle, idle up/down, work mode, breaker mode, tachometer, instrumentation and fault code information.
- The memory clear (X23), diagnostic switch (X24) and data link (X4) connectors are not used with the Case Electronic Service Tool (EST) diagnostic system. They are required when using the Tech 2 Diagnostic Tool.

Outputs from 81 pin engine harness connector:

- When the ignition signal is present from the keyswitch, the ECM activates the main relay. Once the Main Relay (K33 on machine schematic) is activated, battery power is fed to the ECM through the relay normally open (NO) contacts to pins number 2 and 6. When the key switch is turned to the off position, the ECM continues to hold the main relay activated for a period of time to allow the ECM to power down safely. This delay is about 10 seconds.

- The glow control relay system consists of the ECM, glow relay, glow plug. When the key switch is turned ON with low engine coolant temperatures, the ECM determines the glow time and operates the glow relay (K2). After a certain time has elapsed, the ECM will turn the glow relay to “OFF”. Also, after-glow function allows to stabilize idling immediately after starting.

Outputs from 40 pin engine harness connector:

- The engine driven high pressure injection pump pressurizes fuel to feed to the common rail. The injection pump has a suction control valve (SCV), and a fuel temperature (FT) sensor. The suction control valve (SCV) is installed onto high pressure pump section and controls supply of fuel (discharge amount) to common rail. The engine control module (ECM) regulates period of electrical activation time of the SCV to regulate the fuel discharge amount.

  Do not replace the SCV. If it is faulty, replace it as supply pump ASM.

- The exhaust gas recirculation (EGR) system recirculates a part of the exhaust gas to the engine intake to reduce the combustion temperature inside the cylinders to reduce NOx (nitrogen oxides) in the exhaust gas. The EGR valve opening is calculated according to the engine coolant temperature (ECT), the engine speed, and the target fuel injection quantity. The EGR motor is the brushless DC motor, and is driven by three phases. The ECM drives the EGR motor through the EGR motor drive circuits U, V, and W. The motor rotates with a combination of the three-phase signals. The ECM sets the Error Code when the EGR motor drive duty is high and the difference between the target EGR position and actual EGR position is large.

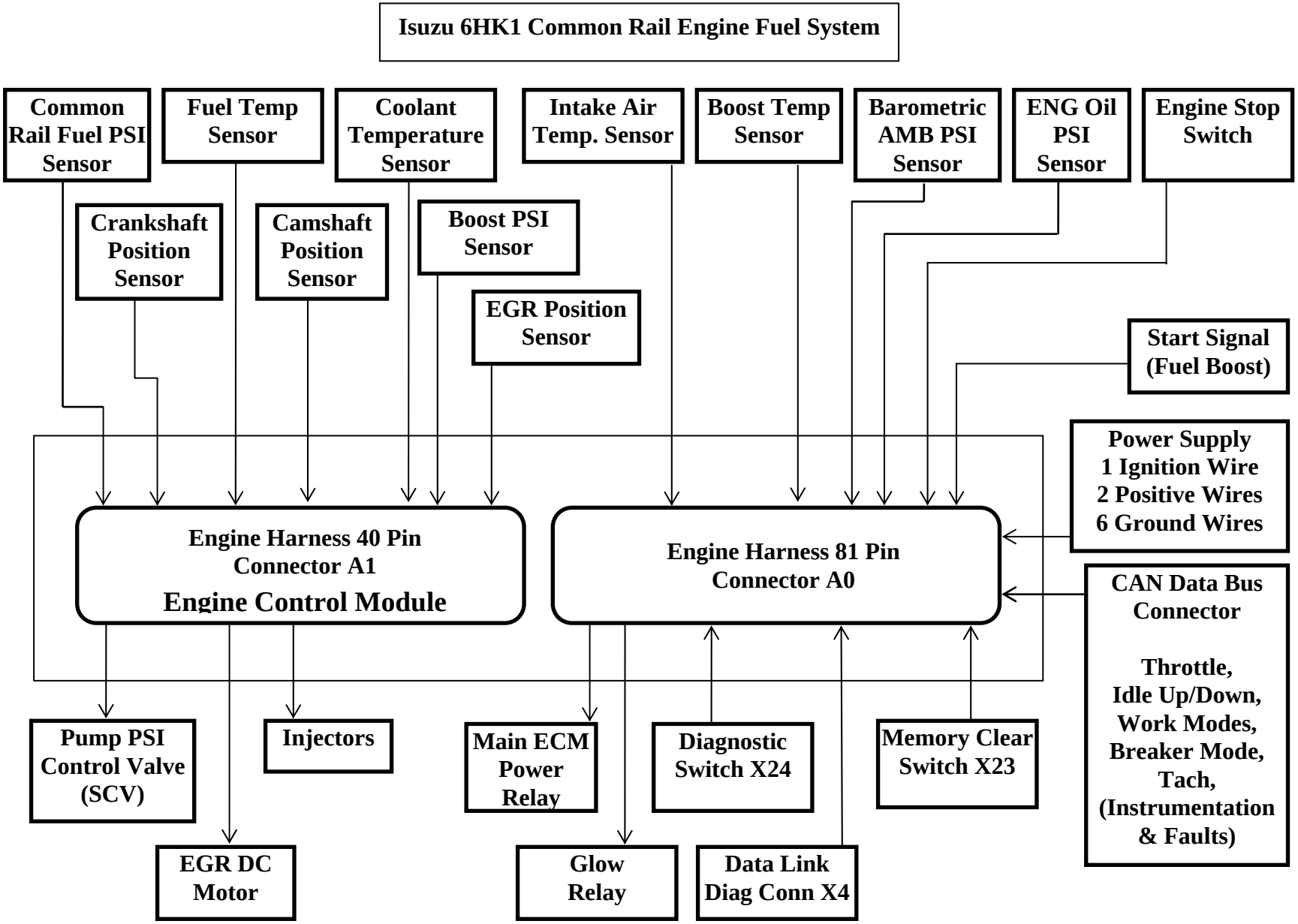
Isuzu 6HK1 Common Rail Engine Fuel System
Common Rail Fuel PSI Sensor
Fuel Temp Sensor
Coolant Temperature Sensor
Intake Air Temp. Sensor
Boost Temp Sensor
Barometric AMB PSI Sensor
ENG Oil PSI Sensor
Engine Stop Switch
Crankshaft Position Sensor
Camshaft Position Sensor
Boost PSI Sensor
EGR Position Sensor
Start Signal (Fuel Boost)
Power Supply
1 Ignition Wire
2 Positive Wires
6 Ground Wires
Engine Harness 40 Pin Connector A1
Engine Control Module
Engine Harness 81 Pin Connector A0
CAN Data Bus Connector
Throttle, Idle Up/Down, Work Modes, Breaker Mode, Tach, (Instrumentation & Faults)
Pump PSI Control Valve (SCV)
Injectors
Main ECM Power Relay
Diagnostic Switch X24
Memory Clear Switch X23
EGR DC Motor
Glow Relay
Data Link Diag Conn X4

Isuzu 4HK-1 and 6HK-1 Engine Overview (continued)

Outputs from 40 pin engine harness connector: (continued)

- The injectors are controlled by the engine control module (ECM). The ECM sends a common power supply to injectors 1, 3 and 5. The ECM also sends a common power supply to injectors 2, 4 and 6. The ECM fires the injectors by controlling the ground of the individual injectors. The ECM calculates the basic injection amount and timing based on the signals from throttle position sensor, boost pressure sensor, crankshaft (CKP) sensor, camshaft (CMP) sensor, etc. The timing of the injection is controlled by when the injector activates. The fuel quantity delivered is based upon the amount of time that the injector is open and also the pressure supplied by the common rail. To improve combustion in cylinders, the system injects a little fuel (pre-injection or pilot injection) and ignites it at the beginning of the cycle. A second injection (main injection) delivers the fuel required deliver the horsepower needed.

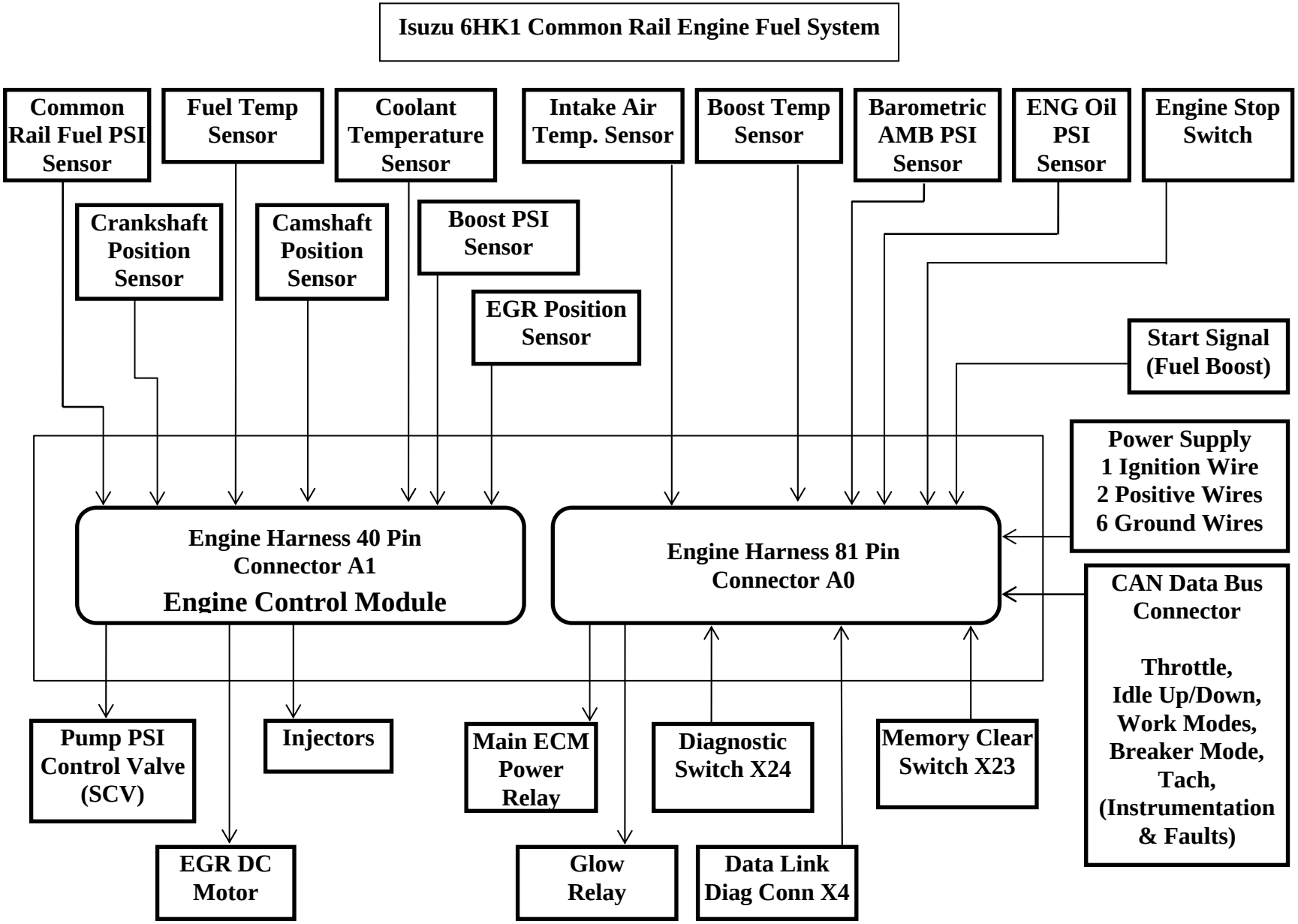
Isuzu 6HK1 Common Rail Engine Fuel System
Common Rail Fuel PSI Sensor
Fuel Temp Sensor
Coolant Temperature Sensor
Intake Air Temp. Sensor
Boost Temp Sensor
Barometric AMB PSI Sensor
ENG Oil PSI Sensor
Engine Stop Switch
Crankshaft Position Sensor
Camshaft Position Sensor
Boost PSI Sensor
EGR Position Sensor
Start Signal (Fuel Boost)
Power Supply
1 Ignition Wire
2 Positive Wires
6 Ground Wires
Engine Harness 40 Pin Connector A1
Engine Control Module
Engine Harness 81 Pin Connector A0
CAN Data Bus Connector
Throttle, Idle Up/Down, Work Modes, Breaker Mode, Tach, (Instrumentation & Faults)
Pump PSI Control Valve (SCV)
Injectors
Main ECM Power Relay
Diagnostic Switch X24
Memory Clear Switch X23
EGR DC Motor
Glow Relay
Data Link Diag Conn X4

Isuzu 4HK-1 and 6HK-1 Engine Fuel Schematic Overview

Fuel System Hydraulic Function

Fuel comes from the tank and typically will go through a prefilter assembly. From the prefilter, the fuel then flows to an electric fuel pump, located in the hydraulic pump compartment. The 24 volt electric fuel pump is powered directly by the battery relay, through the 65 amp fuse (F23) and the 10 amp electrical fuel pump fuse (F8) in the fuse box. The electric fuel pump then sends the fuel through the fuel filter also located hydraulic pump compartment to the inlet port of the high pressure injection pump.

The high pressure injection pump is mounted at the left rear of the engine. This pump needs to be timed to the engine. To install the pump, bring the engine to TDC and then align the mark on the pump drive gear to the mark on the front face of the high pressure pump. Once these conditions are met, install the injection pump. The high pressure injection pump has a shaft driven gerotor feed (charge) pump which provides fuel to the pump pressure control valve (Suction Control Valve SCV). The gerotor pump outlet pressure is controlled by the regulation valve to provide a constant pressure at the inlet of the high pressure pumping pistons. The high pressurepump PSI regulator (SCV), located in the injection pump, controls the flow output of the high pressure pump. The high pressure pump supplies the quantity of fuel to the common rail required to maintain the pressure dictated by the engine control unit (ECM). This assures that only the required amount of fuel is pressurized, improving energy efficiency and limiting heating of fuel in the system. The common rail pressure will range from 3625 to 29,000 PSI (25 to 200 MPa). Excess flow from the feed pump and internal leakage from the injection pump returns to the tank. The fuel temperature sensor (FT) monitors the temperature of this fuel.

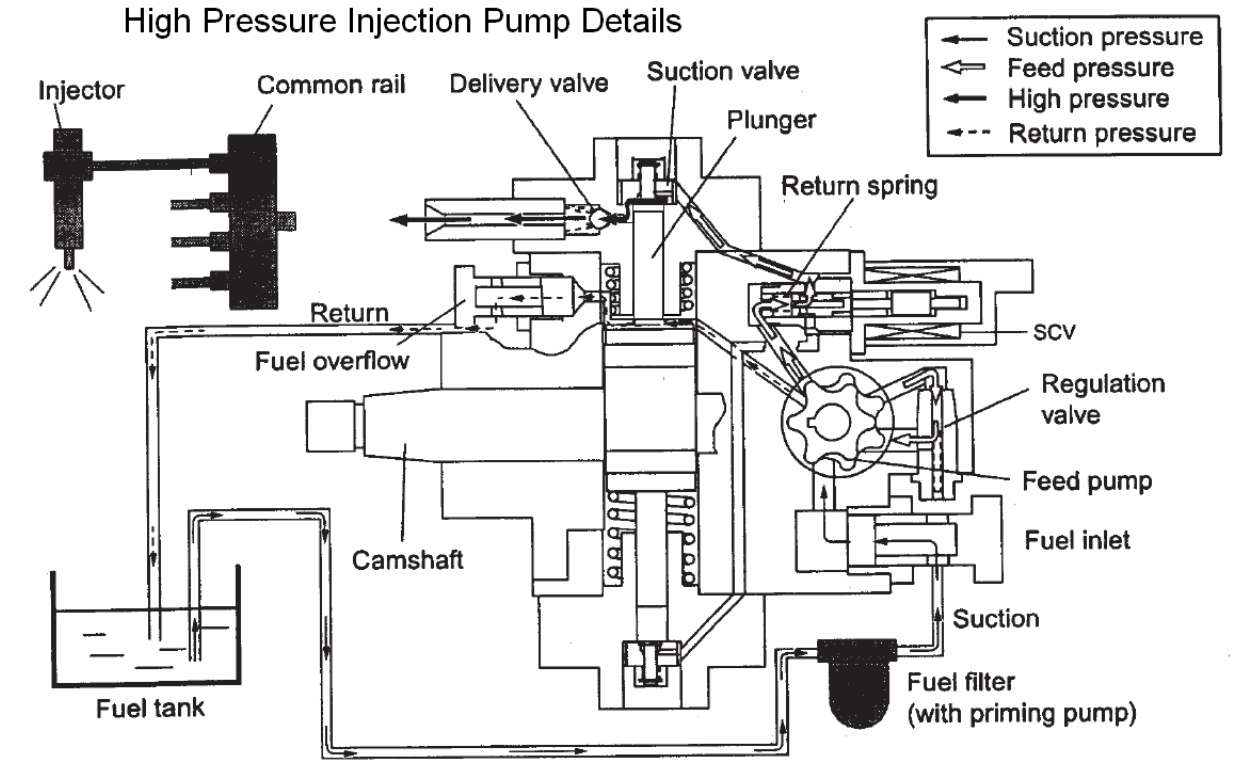

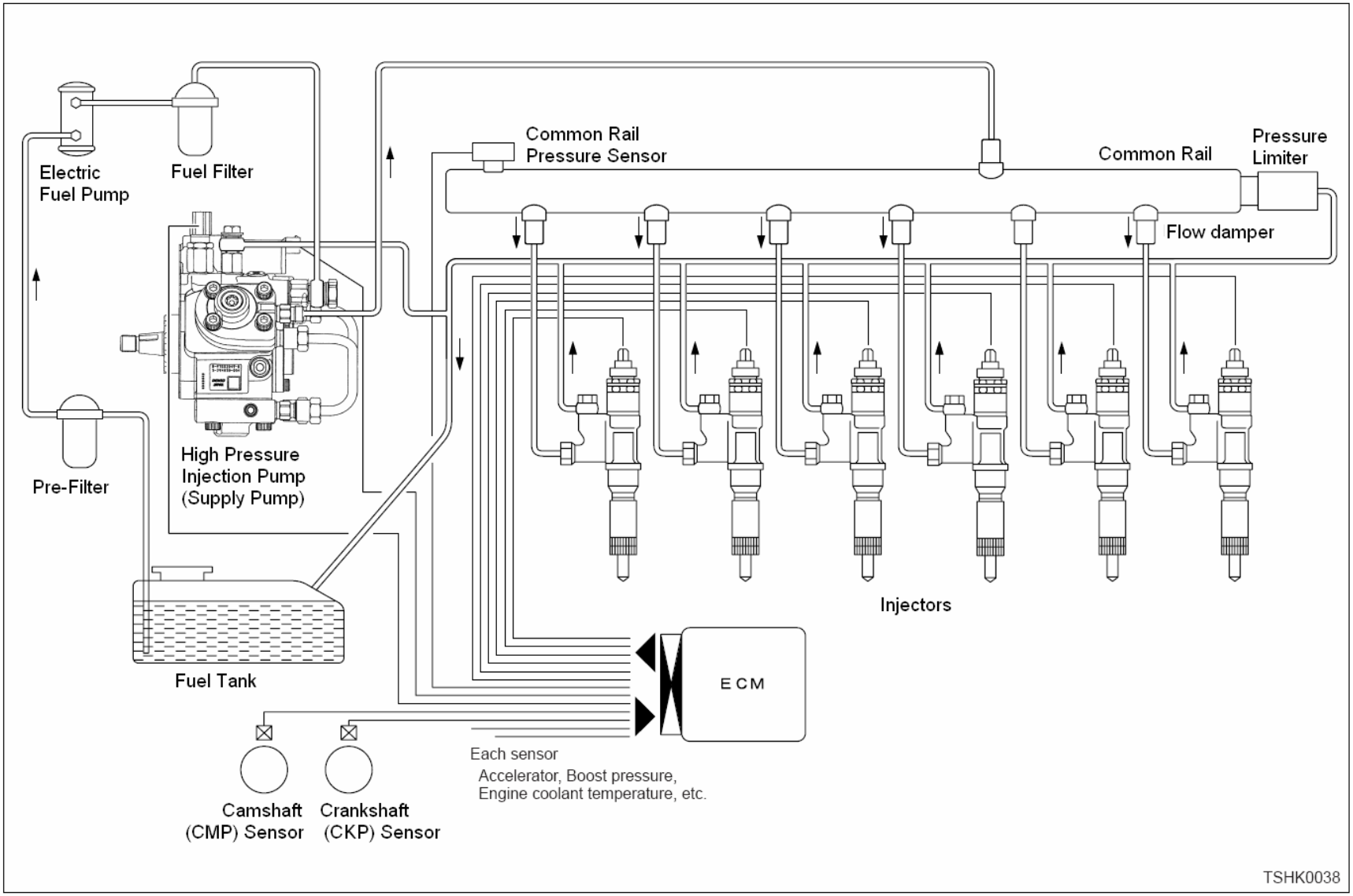
Electric
Fuel Pump
Fuel Filter
Common Rail
Pressure Sensor
Common Rail
Pressure
Limiter
Flow damper
High Pressure
Injection Pump
(Supply Pump)
Pre-Filter
Injectors
Fuel Tank
ECM
Each sensor
Accelerator, Boost pressure,
Engine coolant temperature, etc.
Camshaft
(CMP) Sensor
Crankshaft
(CKP) Sensor
TSHK0038

Isuzu 4HK-1 and 6HK-1 Engine Fuel Schematic Overview

The common rail system stores high pressure fuel between the supply pump and the injectors. The common rail also serves as an accumulator to dampen the fuel pulsations from the pump. Flow dampers are located at the outlet of the common rail to the lines to the injectors. They minimize the pulsation of fuel pressure inside the common rail. The flow dampers also cut off the fuel flow in case an injection line or injector leaks. An orifice in the flow damper piston supplies the fuel to the injectors. An orifice in a spring loaded damper piston acts as a pulsation damper. In the event that there is excessive flow through the orifice, the leading end of the piston closes off the fuel supply to the injection pipe or injectors. The piston again allows fuel flow when the fuel pressure inside the common rail becomes about 0.6 MPa (87 psi).

High pressure fuel from the common rail is available to the inlet of all of the injectors. A high pressure line connects the common rail to each injector. The high pressure supply tube is to be replaced each time it is removed. Each injector has a solenoid valve which, when triggered, causes the injection of a high pressure fuel mist into the combustion chamber. This injection can happen more that once during each firing cycle to control emissions and also make the engine run quieter.

When each injector fires a small amount of drain flow is generated. The injector drain flow collects into a common drain tube which returns to the fuel tank.

A safety relief valve, located at the rear of the common rail, limits the maximum pressure to a maximum of approximately 33,350 PSI (230 Mpa). This can happen if the flow control solenoid valve (SCV) becomes defective. The common rail pressure sensor is located at the bottom of the common rail.

Flow Damper Open

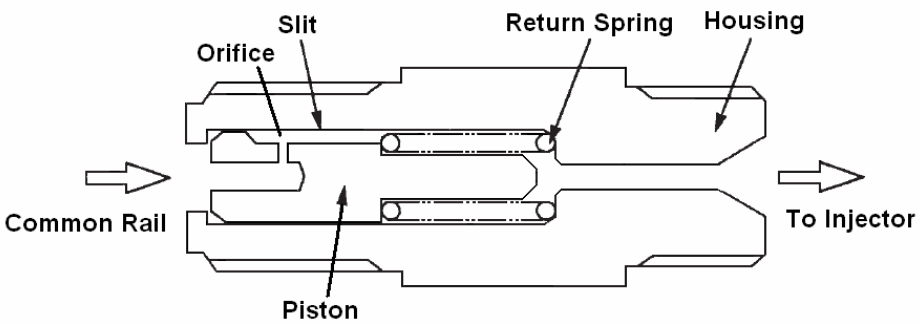

Flow Damper Closed

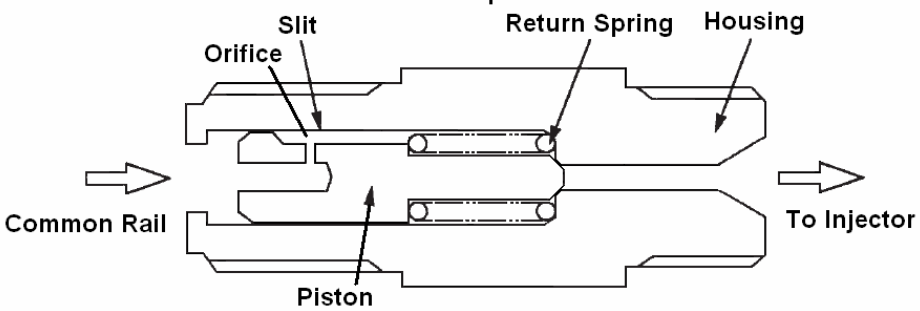

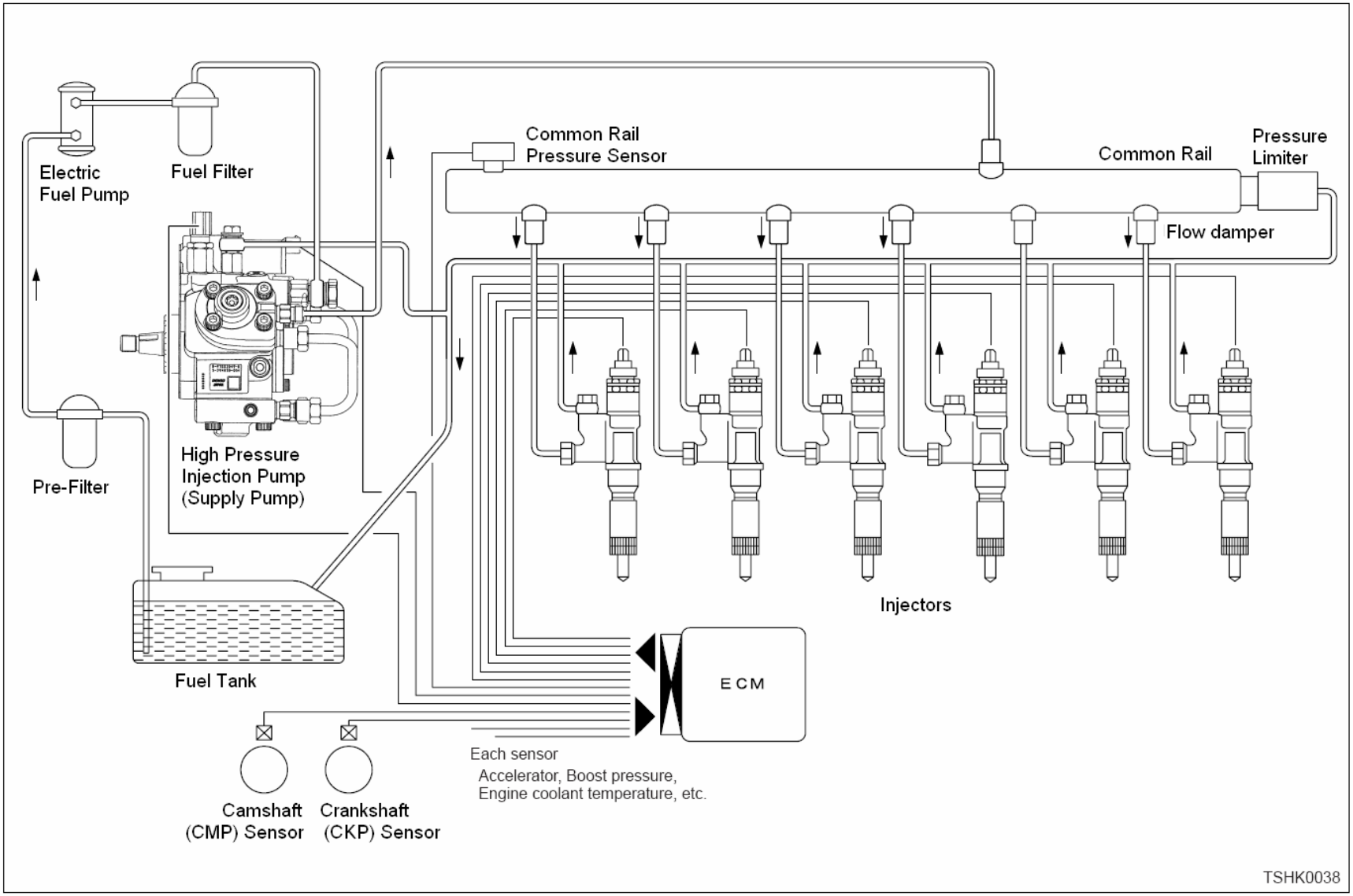
Electric
Fuel Pump
Fuel Filter
Common Rail
Pressure Sensor
Common Rail
Pressure
Limiter
Flow damper
High Pressure
Injection Pump
(Supply Pump)
Pre-Filter
Injectors
Fuel Tank
ECM
Each sensor
Accelerator, Boost pressure,
Engine coolant temperature, etc.
Camshaft
(CMP) Sensor
Crankshaft
(CKP) Sensor
TSHK0038

https://truckmanualshub.com/

Isuzu 4HK-1 and 6HK-1 Engine Sensor Locations

Isuzu 6HK1 Engine Sensor Locations

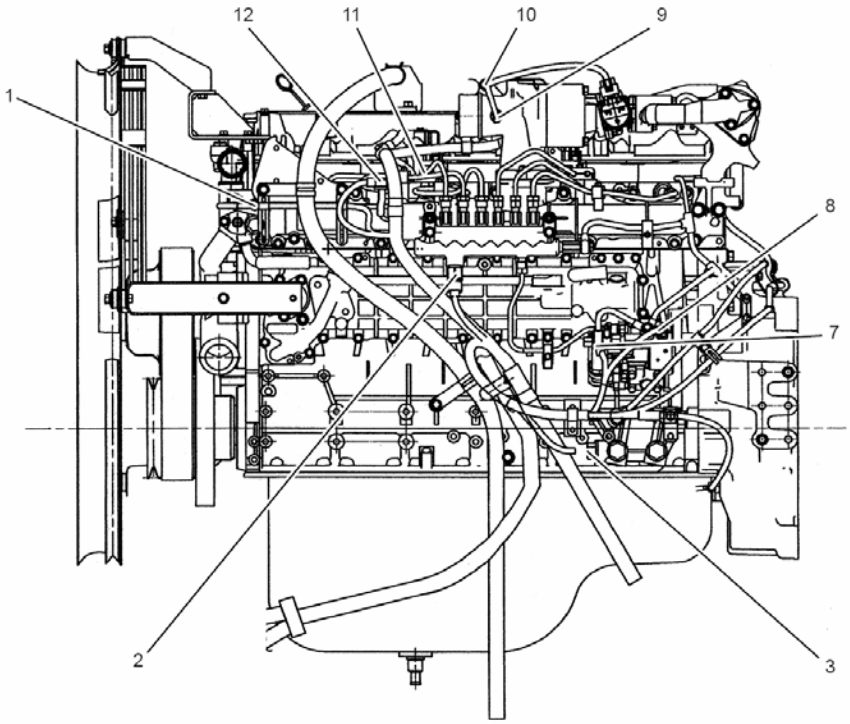

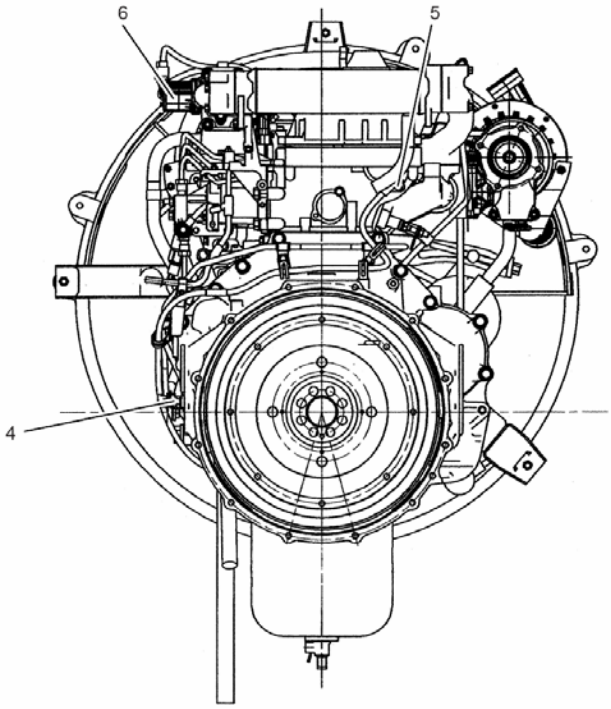

1. Engine coolant temp (ECT) sensor
2. Common rail pressure sensor
3. Engine oil pressure sensor
4. Crankshaft (CKP) Sensor
5. Camshaft (CMP) Sensor
6. EGR valve
7. Suction control valve (SCV)
8. Fuel temperature (FT) sensor
9. Boost temperature sensor
10. Boost pressure sensor
11. Injector
12. Glow plug

Exhaust gas Recirculation (EGR) System

Exhaust Gas Recirculation system is abbreviated to EGR system. It recirculates part of exhaust gas into intake manifold to mix an inert gas with intake air. This leads to lower the combustion temperature to limit emissions of nitrogen oxide (NOx).

It controls amount of EGR by opening/closing the EGR valve installed between exhaust manifold and intake manifold. It determines amount of EGR, based on the engine speed and load rate on engine (fuel injection amount), and operates the EGR valve to control the amount of EGR.

The cooling system (EGR cooler) equipped on the EGR gas passage allows to cool down high temperature EGR gas and mix it with new air to lower the combustion temperature further, resulting in limiting NOx effectively (Cooled EGR).

On the 4HK1 and 6HK1-TC model engines, the EGR system has the check valve to stop backward flow of EGR gas and flows it in one direction only.

The engine control module (ECM) operates the EGR motor according to engine speed, engine load, etc. to control amount of EGR valve lift. The amount of valve lift is detected by EGR position sensor. The dark color area in the figure shows that the valve lift amount is large, and the darkest color area shows that the valve lift amount is almost 100%.

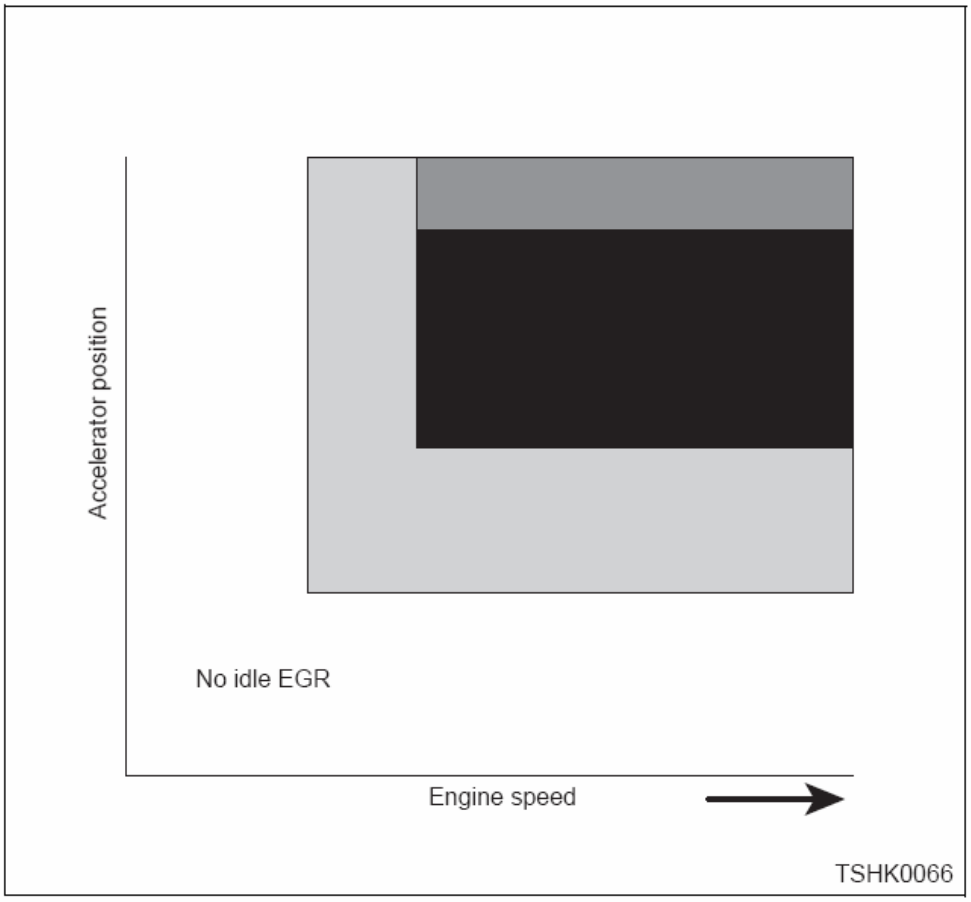

EGR System Schematic

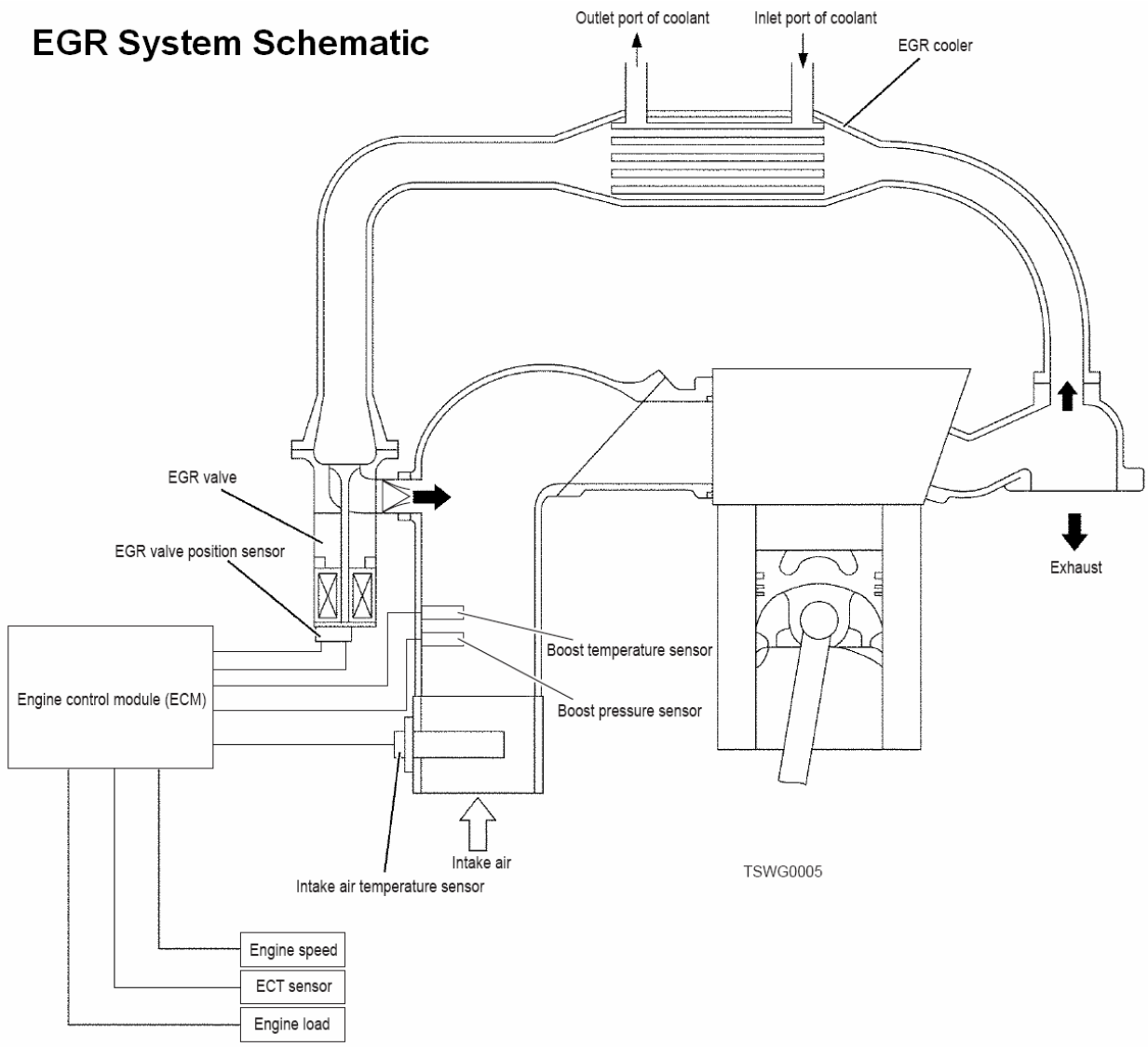

https://truckmanualshub.com/

https://truckmanualshub.com/

Installation of ECM

Install the ECM in the reverse order of removal.
EGR valve position learning is required after replacing the ECM.

1. Turn the key switch to “ON”.
2. Turn the key switch to “OFF”.
3. Leave as it is, "OFF", for 10 seconds.

Failure to perform the EGR valve position learning may result in detection of Error Code for EGR.

About ECM power off

The power supply inside the ECM does not go off for about 10 seconds after turning the key switch OFF. If the ECM power needs to be off such as for memory clear, wait for more than 10 seconds after turning the key switch OFF.

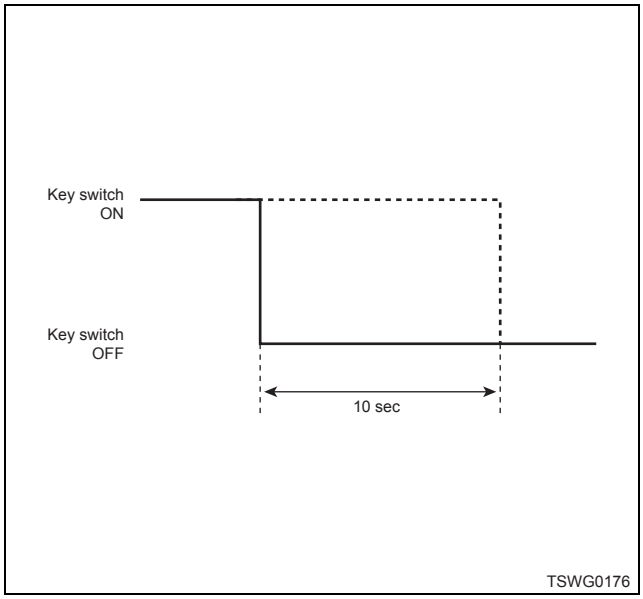

https://truckmanualshub.com/

Senser and actuator

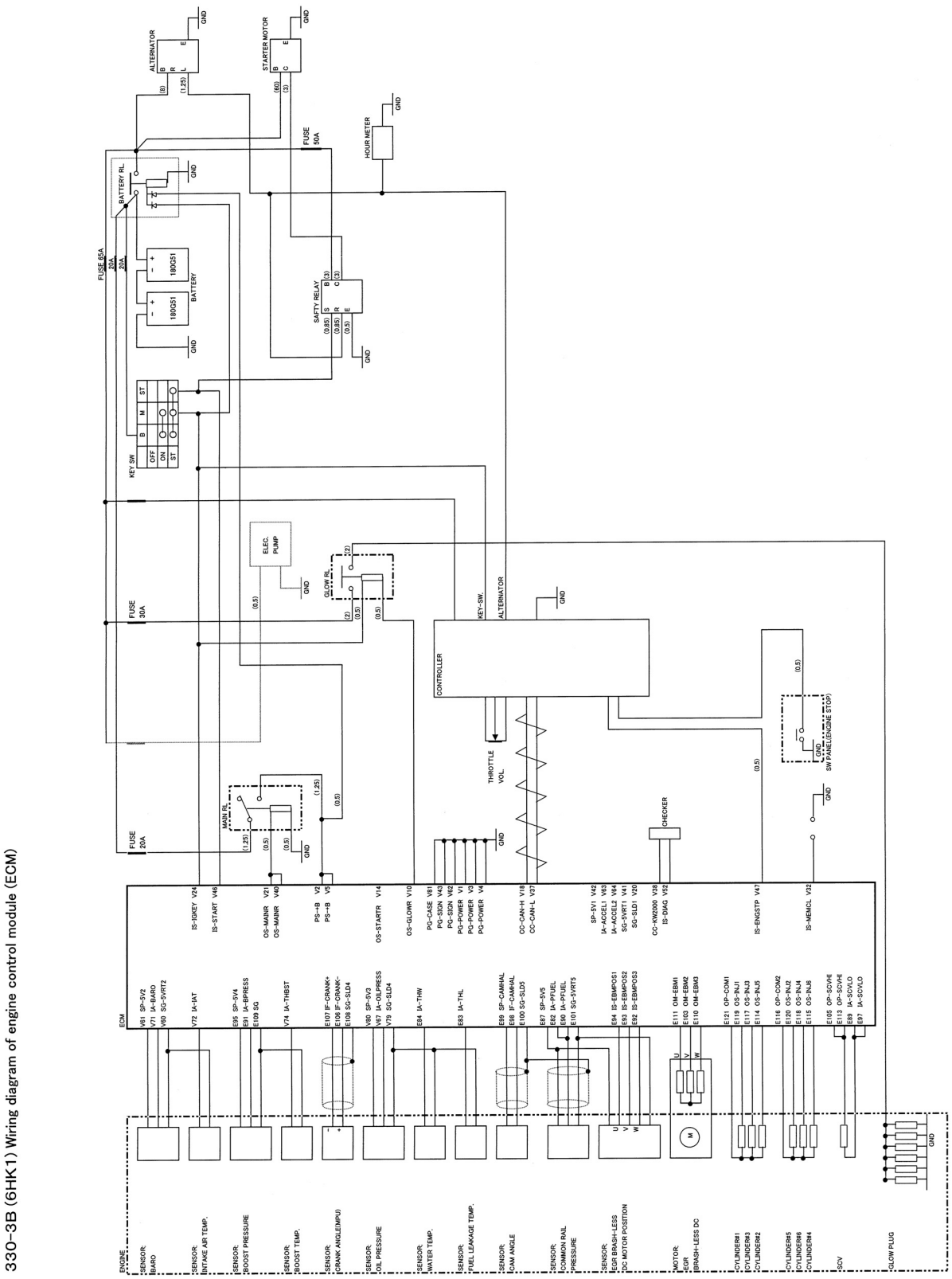

*Refer at last page.(About wiring diagrams)

https://truckmanualshub.com/

Circuit diagram

(Refer to “Wiring diagrams” for a way to read the diagram.)

Main relay circuit

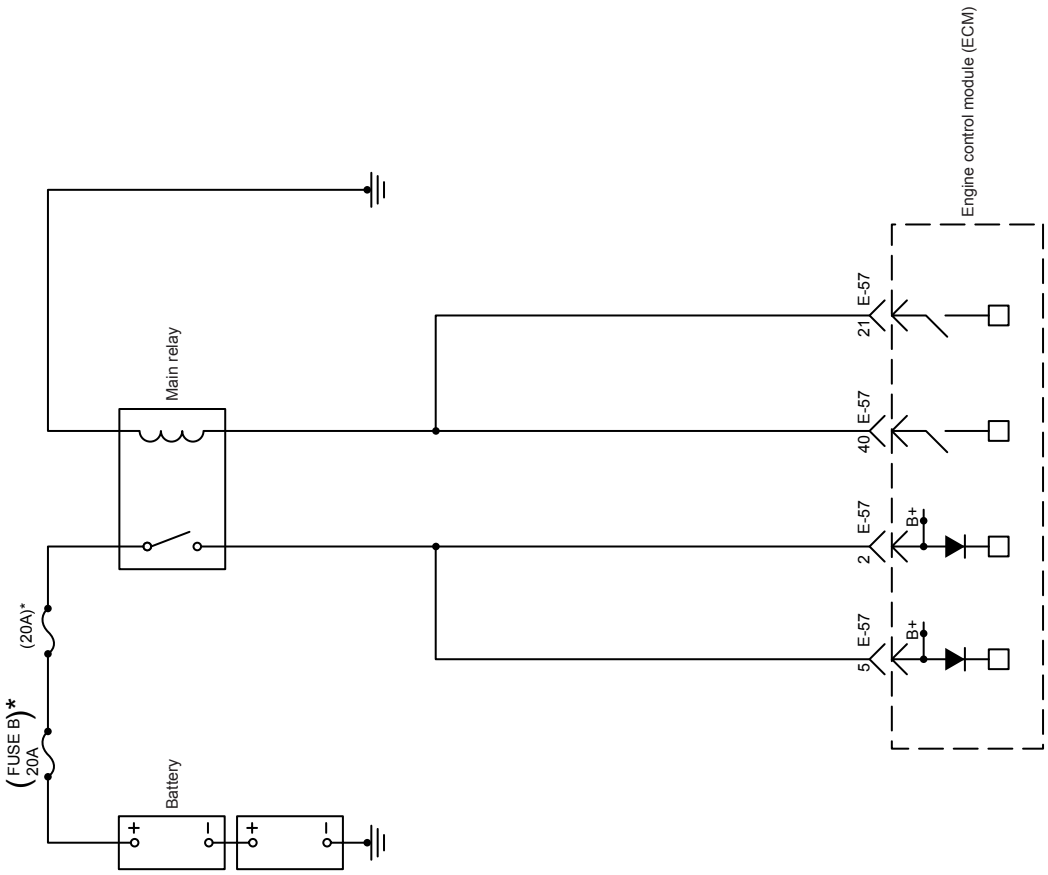

TSWG0027

https://truckmanualshub.com/

Starter for safety relay, glow circuit

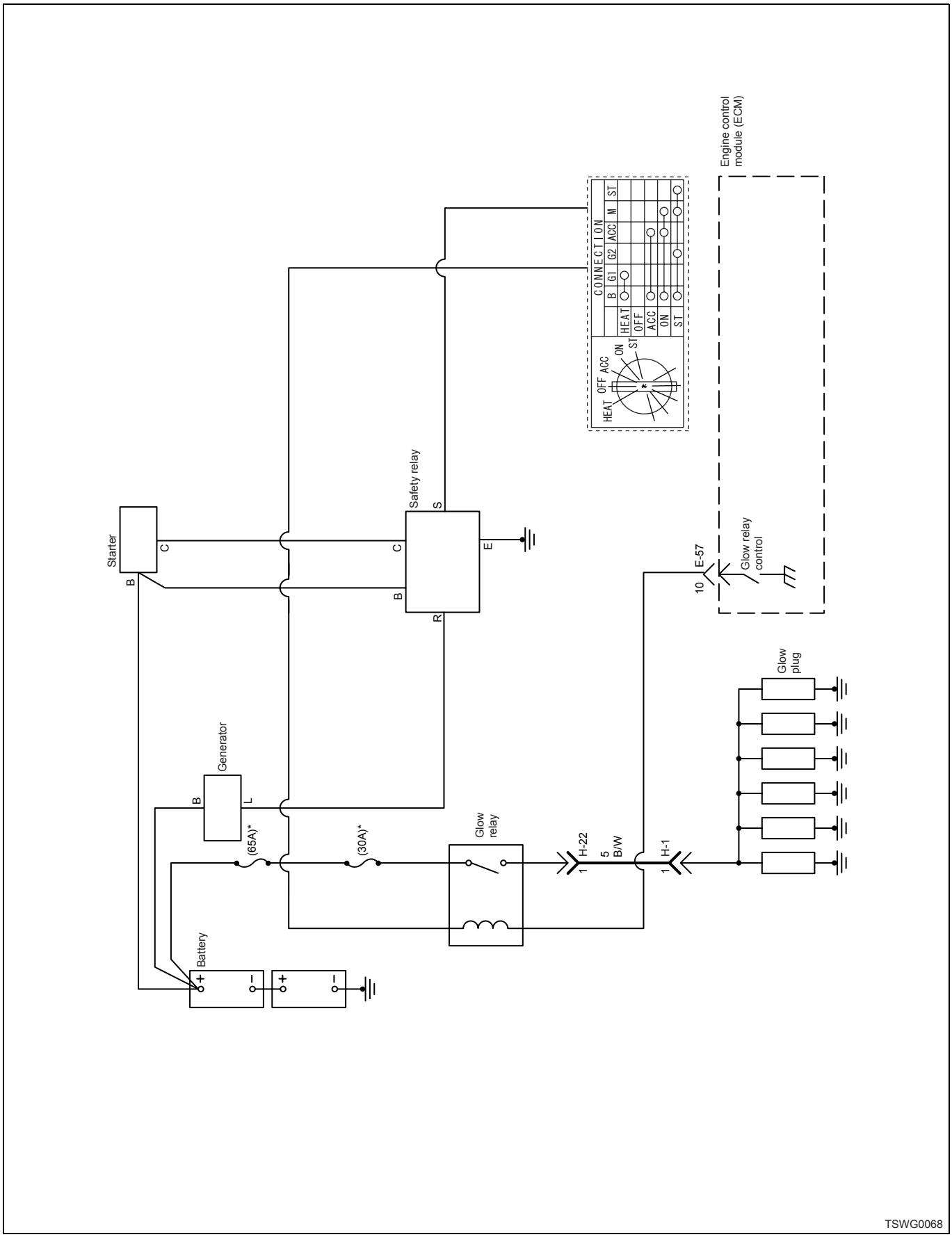

https://truckmanualshub.com/

CAN, GND, DLC circuits

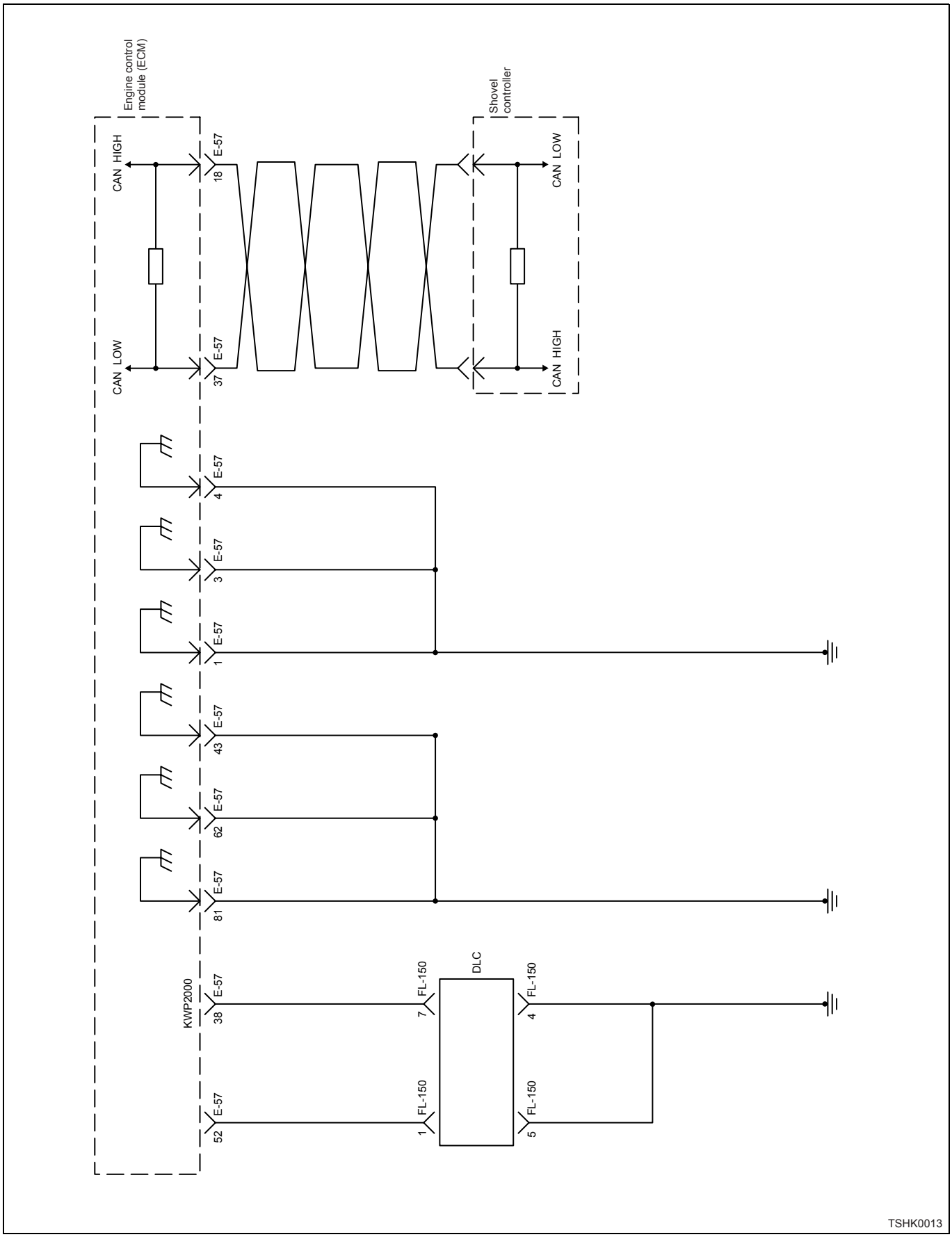

https://truckmanualshub.com/

Injector circuit

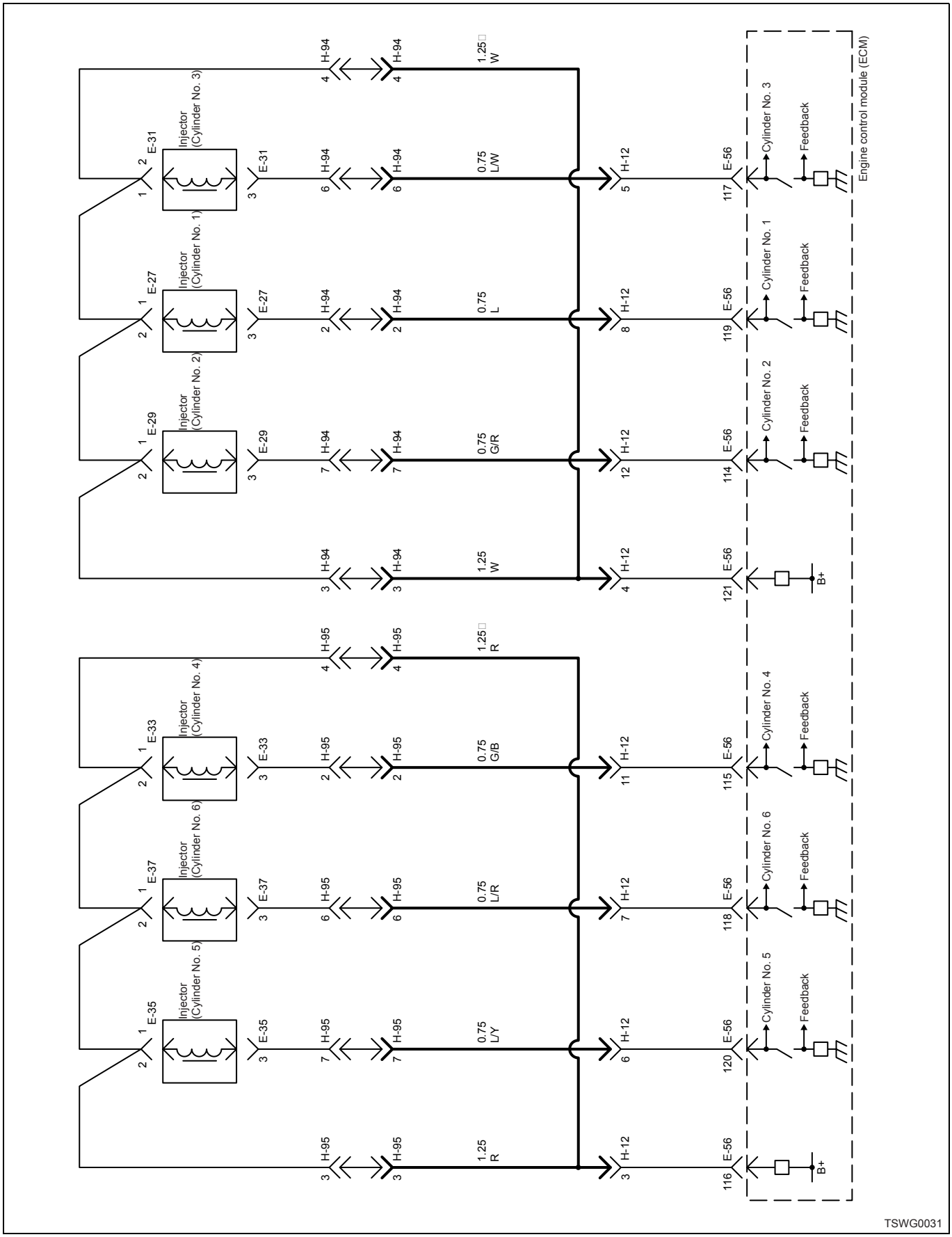

https://truckmanualshub.com/

SCV circuit

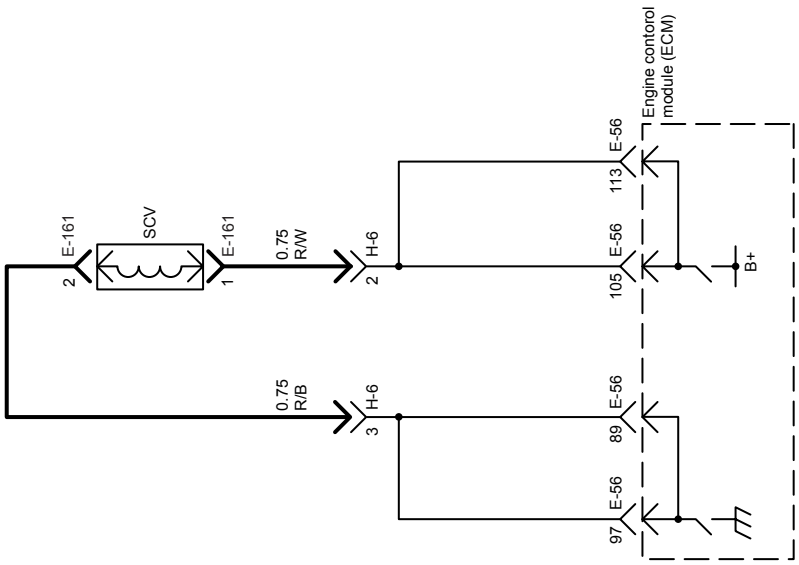

TSHK0016

https://truckmanualshub.com/

CKP sensor, fuel temperature sensor, engine coolant temperature sensor, engine oil pressure sensor circuit

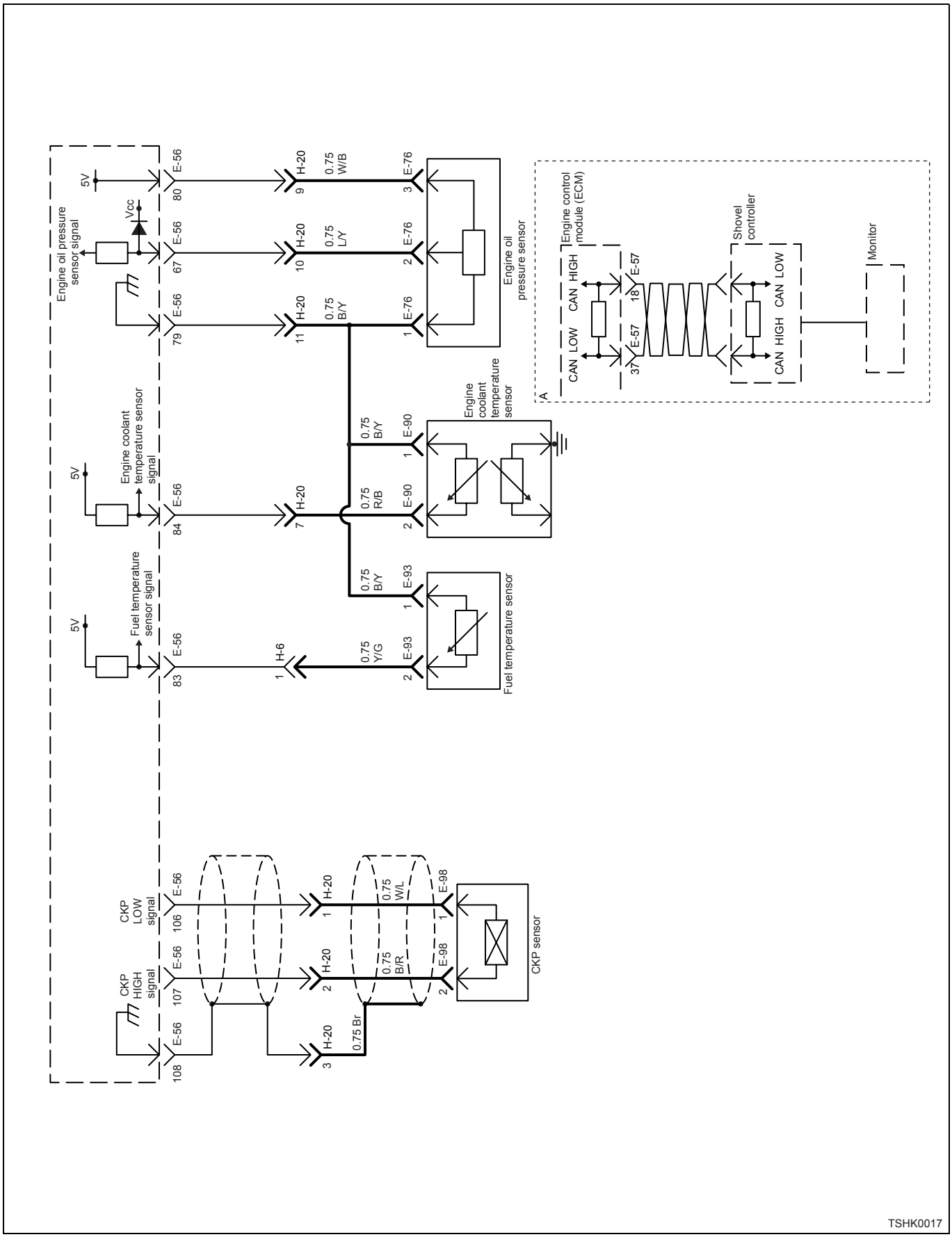

https://truckmanualshub.com/

Boost temperature sensor, boost pressure sensor circuit

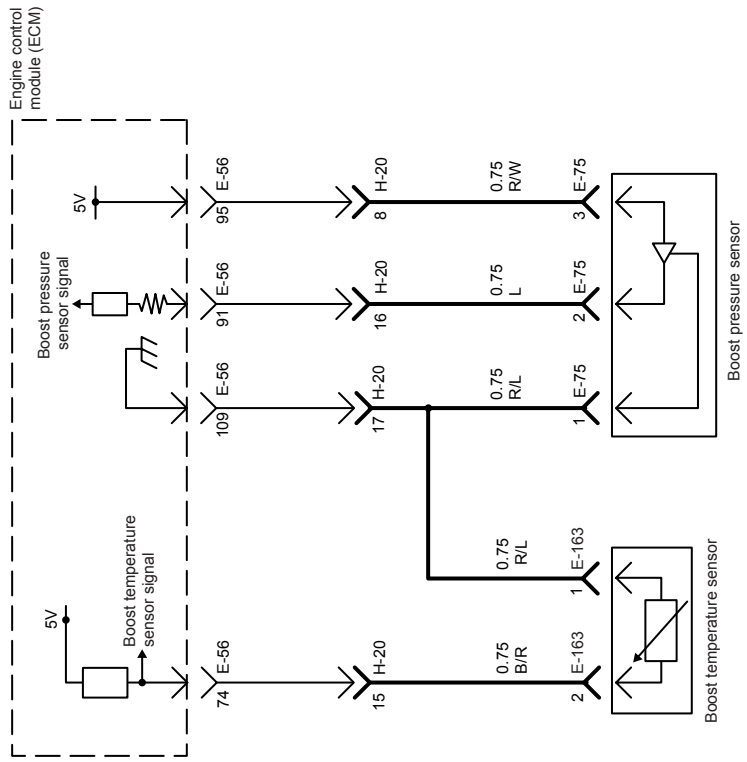

TSWG0034

https://truckmanualshub.com/

CMP sensor, common rail pressure sensor, EGR circuit

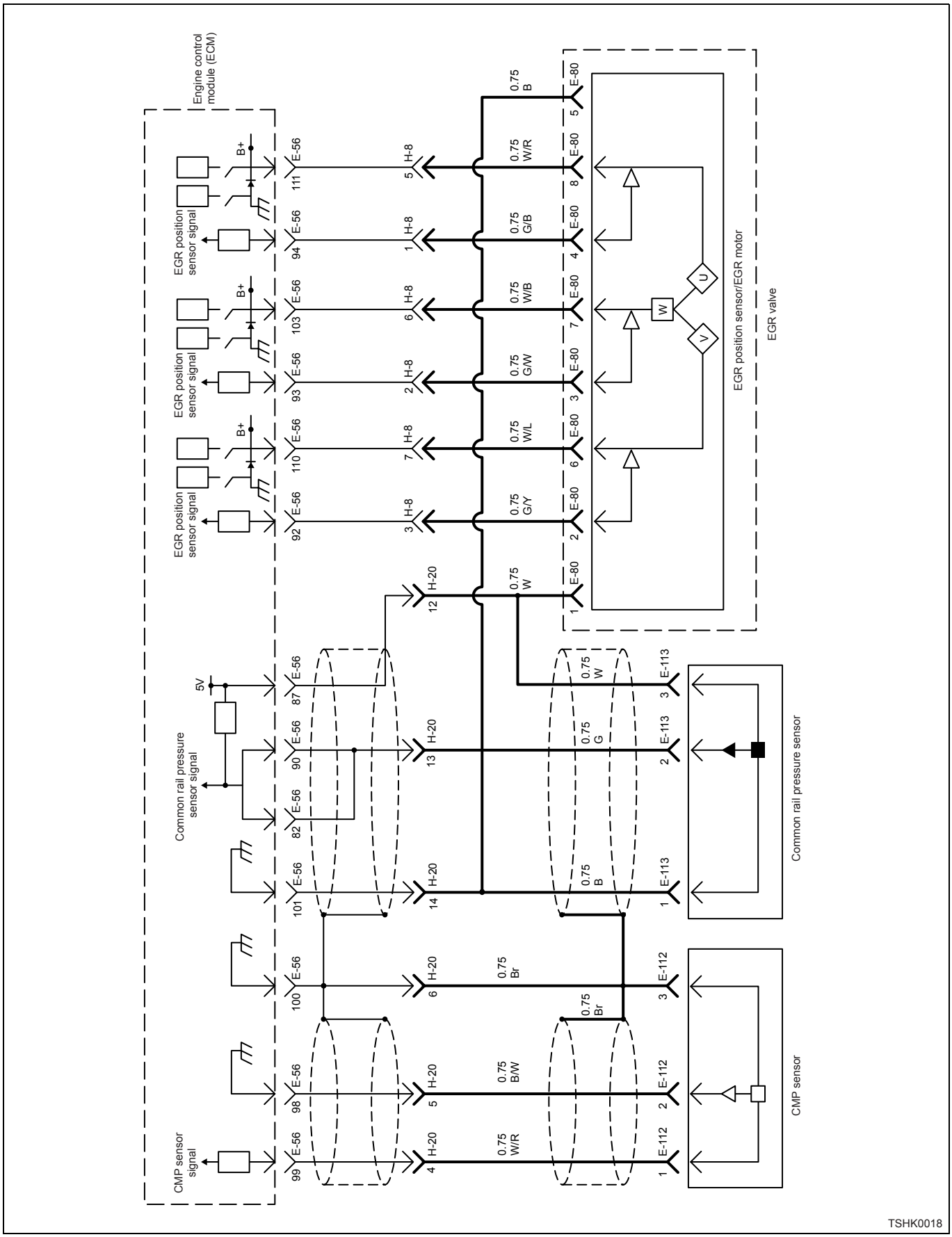

https://truckmanualshub.com/

Memory clear switch, engine stop switch circuit

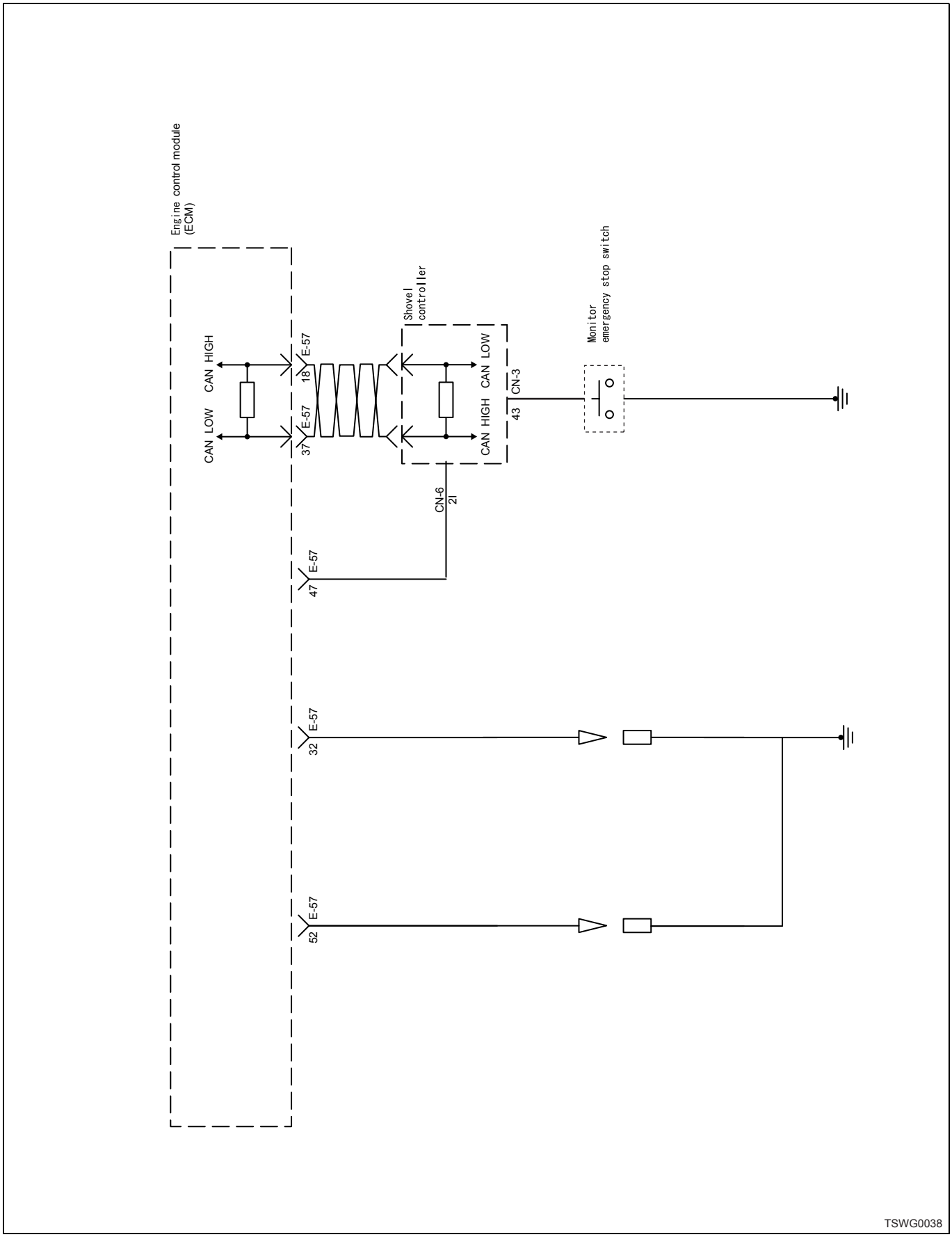

https://truckmanualshub.com/

This page Is Intentionally Left Blank.

https://truckmanualshub.com/

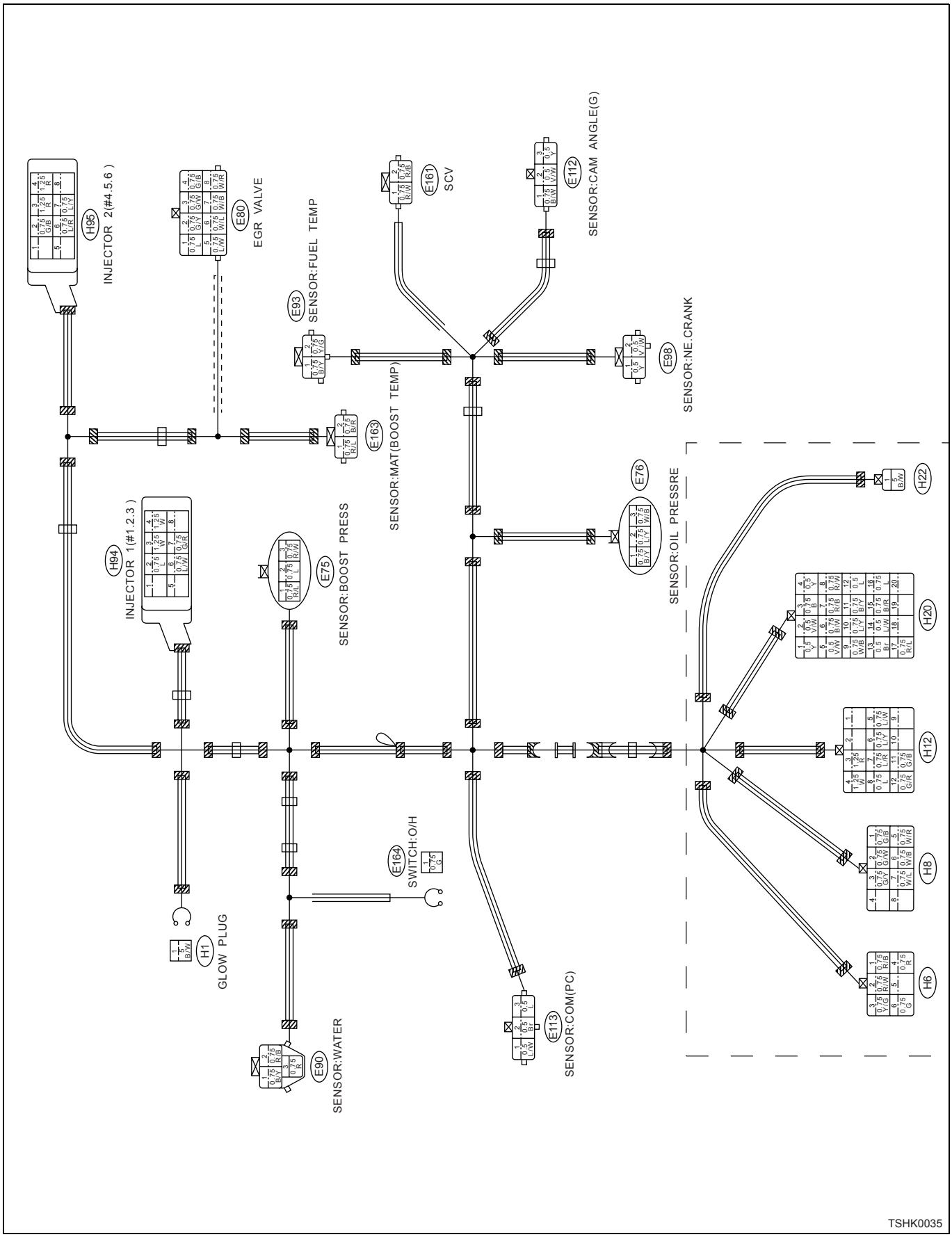

https://truckmanualshub.com/

E75

Terminal Number	
1	Boost pressure sensor GND
2	Boost pressure sensor Vout
3	Boost pressure sensor Vcc

E76

Terminal Number	
1	Engine oil pressure sensor GND
2	Engine oil pressure sensor Vout
3	Engine oil pressure sensor Vcc

E80

Terminal Number	
1	EGR Vcc
2	EGR hall sensor W
3	EGR hall sensor V
4	EGR hall sensor U
5	EGR GND
6	EGR motor W
7	EGR motor V
8	EGR motor U

E90

Terminal Number	
1	ECT GND
2	ECT +
3	ECT meter

E93

Terminal Number	
1	Fuel temperature sensor GND
2	Fuel temperature sensor +

E98

Terminal Number	
1	CKP +
2	CKP GND

E112

Terminal Number	
1	CMP shield
2	CMP GND
3	CMP +

E113

Terminal Number	
1	Common rail pressure sensor GND
2	Common rail pressure sensor Vout
3	Common rail pressure sensor Vcc

E161

Terminal Number	
1	SCV — Hi
2	SCV — Lo

E163

Terminal Number	
1	Boost temperature sensor GND
2	Boost temperature sensor +

E164

Terminal Number	
1	Overheating switch

H1

Terminal Number	
1	Glow

https://truckmanualshub.com/

H6

Terminal Number	
1	SCV–Lo
2	SCV–Hi
3	Fuel temperature sensor +
4	ECT meter
5	—
6	Overheating switch

H8

Terminal Number	
1	EGR hall sensor U
2	EGR hall sensor V
3	EGR hall sensor W
4	—
5	EGR motor U
6	EGR motor V
7	EGR motor W
8	—

H12

Terminal Number	
1	—
2	—
3	Injector power supply 2
4	Injector power supply 1
5	OS — INJ3 signal
6	OS — INJ2 signal
7	OS — INJ4 signal
8	OS — INJ1 signal
9	—
10	—
11	OS — INJ6 signal
12	OS — INJ5 signal

H20

Terminal Number	
1	CKP +
2	CKP GND
3	CKP shield
4	CMP +
5	CMP GND
6	CMP shield
7	ECT +
8	Boost pressure sensor Vcc
9	Engine oil pressure sensor Vcc
10	Engine oil pressure sensor Vout
11	Engine oil pressure sensor GND
12	Common rail pressure sensor Vcc
13	Common rail pressure sensor Vout
14	Common rail pressure sensor GND
15	Boost temperature sensor +
16	Boost pressure sensor Vout
17	Boost pressure sensor GND
18	—
19	—
20	—

H22

Terminal Number	
1	Glow

H94

Terminal Number	
1	—
2	OS — INJ1 signal
3	Injector power supply 1
4	Injector power supply 2
5	—
6	OS–INJ3 signal
7	OS–INJ5 signal
8	—

https://truckmanualshub.com/

H95

Terminal Number	
1	—
2	OS–INJ6 signal
3	Injector power supply 2
4	Injector power supply 1
5	—
6	OS–INJ4 signal
7	OS–INJ2 signal
8	—

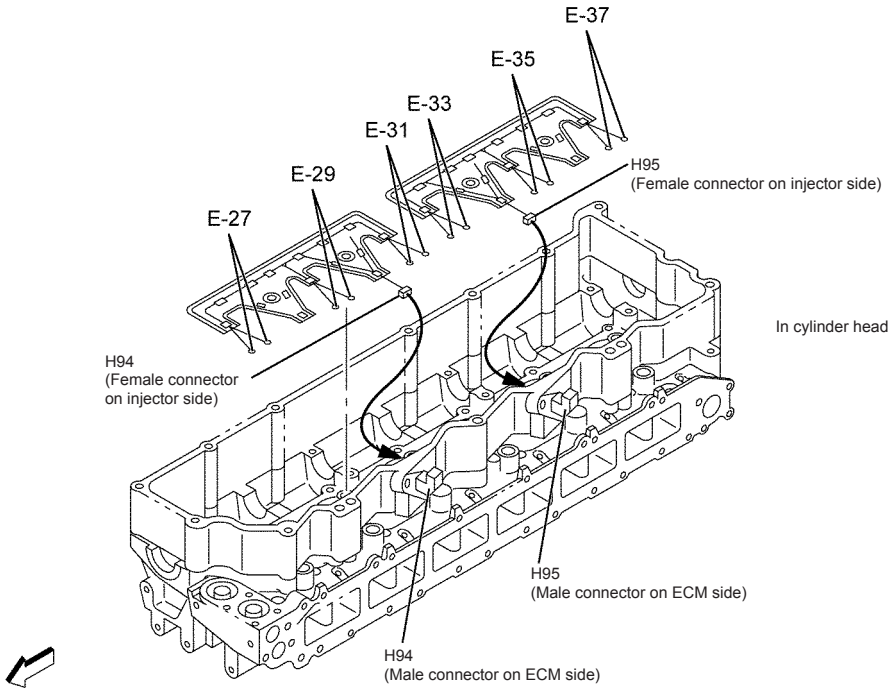

TSWG0041

https://truckmanualshub.com/

Connector list

No.	Connector Face
E-27	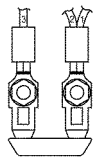 003-128 #1 injector (Silver)
E-29	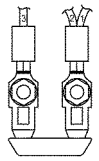 003-128 #2 injector (Silver)
E-31	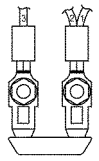 003-128 #3 injector (Silver)
E-33	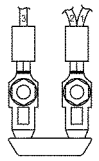 003-128 #4 injector (Silver)
E-35	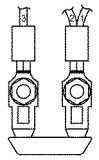 003-128 #5 injector (Silver)
E-37	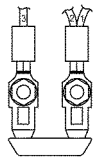 003-128 #6 injector (Silver)
E-56	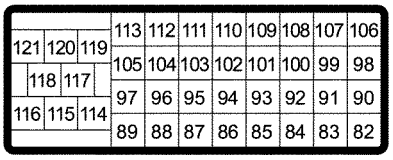 040-004 (Gray)
E-57	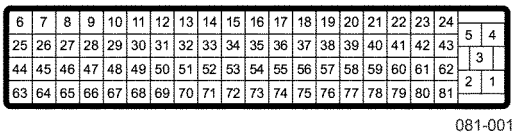 081-001 (Gray)

No.	Connector Face
E-75	003-501
E-76	003-501 (Black)
E-80	008-031 (Black)
E-90	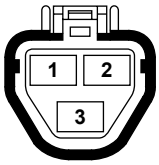 003-500 (Blue)
E-93	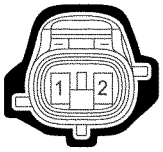 002-232 (Gray)
E-98	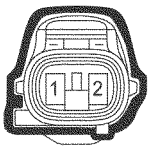 002-233 (Black)
E-112	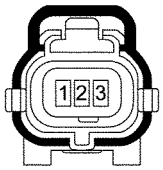 003-067 (Black)
E-113	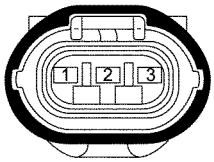 003-097 (Gray)

https://truckmanualshub.com/

No.	Connector Face
E-114	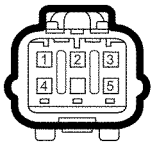 005-034 (Black)
E-161	002-178 (Brown)
E-162	002-178 (Dark gray)
E-163	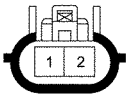 002-006 (Gray)
E-164	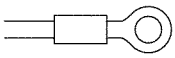 000-012
FB-124	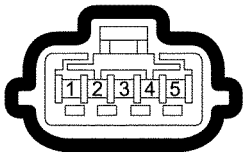 005-029 (Black)
FL-150	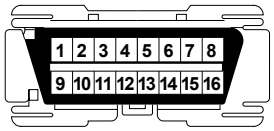 016-500
FL-269	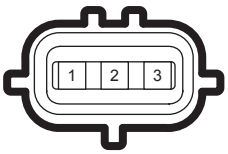 003-502

No.	Connector Face
H1	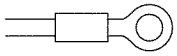 000-012 (Black)
H-6	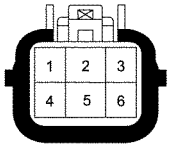 006-001 (Gray)
H-6	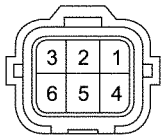 006-011 (Gray)
H-8	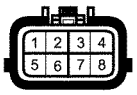 008-009 (Black)
H-8	008-010 (Black)
H-12	012-013 (Gray)
H-12	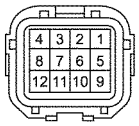 012-014 (Gray)
H-20	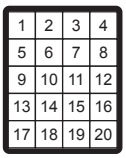 020-500

https://truckmanualshub.com/

No.	Connector Face
H-20	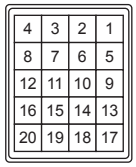 020-501
H22	001-034 (White)
H22	001-003 (White)
H-94 (ECM side)	008-046 (Gray)
H-94 (ECM side)	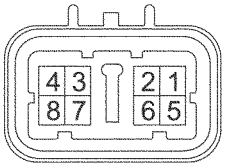 008-047 (Gray)
H-94 (Injector side)	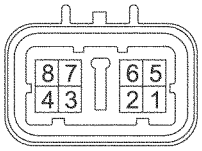 008-052 (Gray)
H-94 (Injector side)	008-051 (Gray)
H-95 (ECM side)	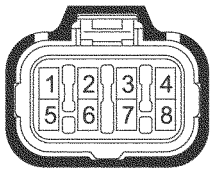 008-046 (Gray)

No.	Connector Face
H-95 (ECM side)	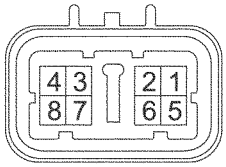 008-047 (Gray)
H-95 (Injector side)	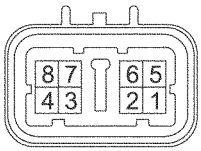 008-052 (Gray)
H-95 (Injector side)	008-051 (Gray)

https://truckmanualshub.com/

This page Is Intentionally Left Blank.

https://truckmanualshub.com/

Error Code: 0088

Common rail pressure is abnormally high (1st or 2nd stage).

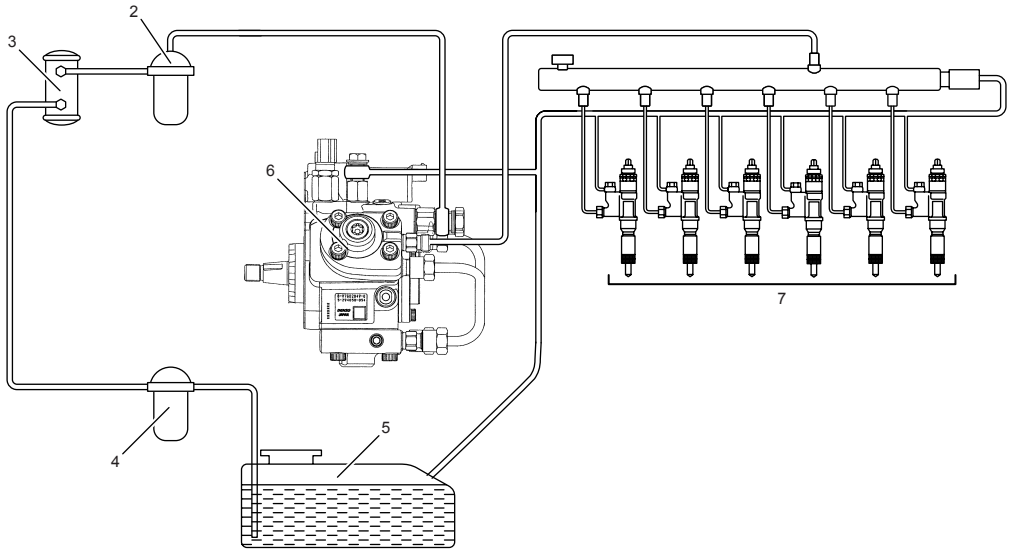

Name

1. Common rail
2. Fuel filter
3. Electromagnetic Pump
4. Pre-filter
5. Fuel tank
6. Supply pump
7. Injector

https://truckmanualshub.com/

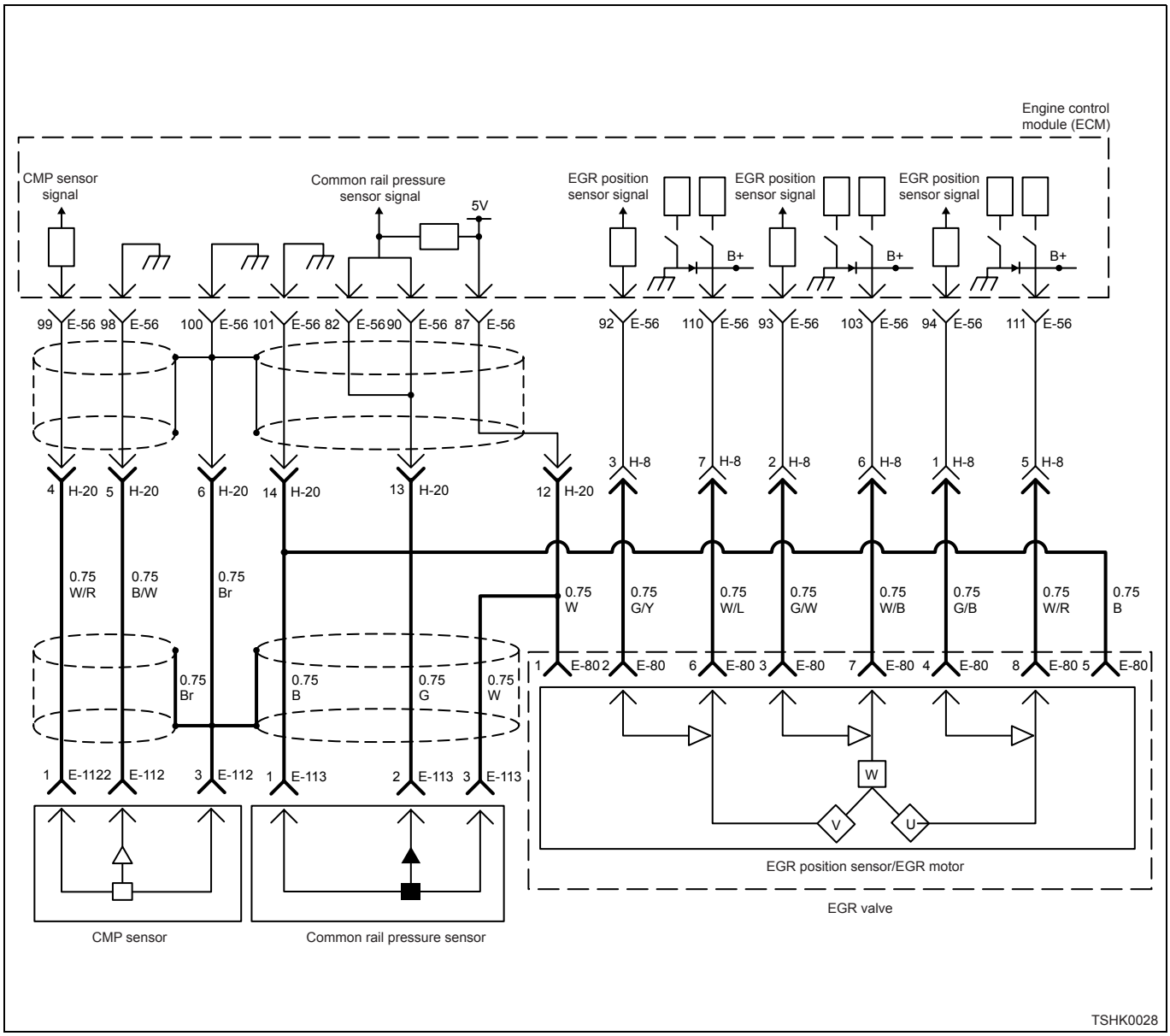

Description of circuit

The common rail pressure sensor detects the common rail internal pressure. The common rail pressure sensor is installed to the common rail. As the common rail internal pressure changes depending on engine condition, output voltage of the common rail pressure sensor will change (if the common rail internal fuel pressure is low, output voltage becomes low, if the pressure is high, the output voltage becomes high as well). The engine control module (ECM) reads this output voltage change, converting it into common rail internal pressure, to utilize for control. Dedicated communication circuits are used for the sensor power supply (5V), SIG, and ground in the common rail pressure sensor, which are connected to the ECM. Also, the sensor circuit is shielded to avoid electrical noise etc.

Main trouble symptom

- Intense engine vibration
- Rough idling
- Output lowering
- Engine blow up fault
- Black smoke emitted
- Excessive output possible

Preconditions when Error Code is set

1st step

- Key switch input voltage is 18V or more.
- Error Code 0088, 0192, 0193, or 1635 is not detected.
- Actual rail pressure is 2 MPa or more, and 70 rpm or more.

2nd step

- Battery voltage is normal.
- Error Code 0088, 0192, 0193, or 1635 is not detected.
- Actual rail pressure is 2 MPa or more, and 70 rpm or more.

https://truckmanualshub.com/

Error Code set condition

1st step

- Rail pressure is more than 185MPa for 5 seconds or more.
- Common rail pressure sensor voltage is 3.9 V or more.

2nd step

- 1st stage is completed, and rail pressure is more than 190MPa for 5 seconds or more.
- Common rail pressure sensor voltage is 4.0 V or more.

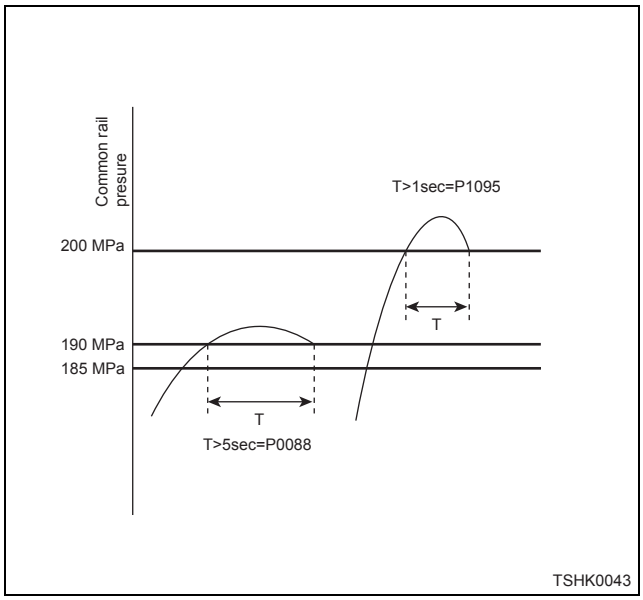

Action taken when Error Code is set

- "ELEC. PROBLEM" is displayed.

Back-up mode

- L mode fixed.
- Limited injection amount 3 (multi-injection stopped)
- Target RP upper limit (80MPa)

Recovery from failure

- Recovery pattern 1.

Refer to “List of diagnostic trouble code” and “About recovery from failure” error.

The conditions to clear the Error Code

- The error code is cleared from the current trouble when the condition is either repaired or disappeared.

Refer to "About recovery from failure".

Diagnostic aid

If the intermittent trouble is suspected, followings may be the cause.

- Improper connection of harness connector
- Defective harness routing
- Worn harness cladding
- Wire disconnection inside harness cladding

Following inspections are necessary to detect these causes.

- Improper connection of harness connector and ECM connector
  - Poor connection of terminal from connector
  - Unmatched terminals are fitted.
  - Damage of connector lock
  - Poor contact between terminal and wire
- Damaged harness
  - Visually check the harness for damage.
  - Check the relevant items while moving the connector and the harness which are related to the sensor.

Step	Action	Value	YES	NO
1	Check the error code 0088.	—	Go to Step 2.	—
2	1. Start the engine. 2. Check the Error Code. 3. Are the fuel-related parts only just replaced? Air bleeding may not be performed sufficiently after replacing fuel-related parts. Bleed air again. Check the Error Code after bleeding air. Is any of the 0088, 0192, 0193, or 1635 detected?	—	Go to the relevant Error Code detected.	Go to Step 3.

https://truckmanualshub.com/

Step	Action	Value	YES	NO
3	1. Check the fuel return pipe between the supply pump and the fuel tank for breakage, twist, etc. 2. Check for clogging or twisting in the vent hose of the fuel tank. 3. Check for foreign matter in the fuel tank. 4. If the trouble is detected, repair as required. 5. Enforce the diagnostic aid. Is the trouble detected?	—	Go to Step 6.	Go to Step 4.
4	1. Replace the common rail (common rail pressure sensor) since it seems that abnormal value of the pressure sensor is detected. **Note:** **For work procedure, refer to "Engine section" in the service manual.** 2. Check the Error Code. Is the trouble detected?	—	Go to Step 5.	Go to Step 6.
5	Replace the supply pump. **Note:** **For work procedure, refer to "Engine section" in the service manual.** Is the procedure completed?	—	Go to Step 6.	—
6	Check the Error Code again. 1. Connect all the harnesses. 2. Clear the Error Code. Refer to "How to clear diagnosis trouble code (Error Code)" of "Procedure of trouble diagnosis" in this section for how to clear Error Codes. 3. Turn the key switch to "OFF" for more than 10 seconds. 4. Test run with the "Preconditions when Error Code is set". 5. Check the Error Code. Is Error Code 0088 detected?	—	Go to Step 2.	Go to Step 7.
7	Check if other Error Code is detected. Is other Error Code detected?	—	Go to each Error Code diagnosis.	Verify repair.

https://truckmanualshub.com/

About common rail pressure sensor

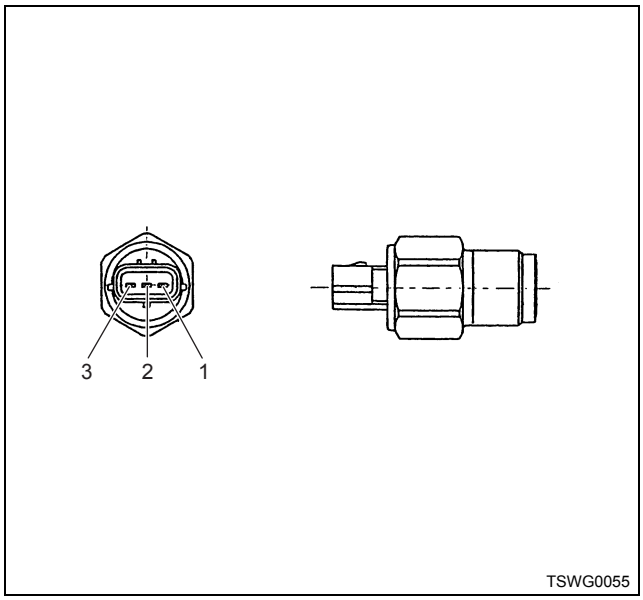

Name

1. Sensor ground
2. Sensor signal
3. Sensor power supply

Characteristics of common rail pressure sensor

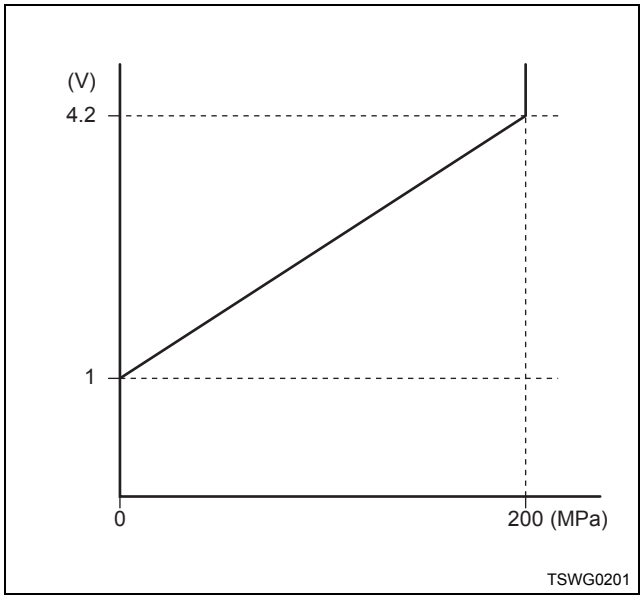

https://truckmanualshub.com/

Preliminary ELECTRONIC SERVICE TOOL (EST)

Engine Module Programming System (EMPS) - Summary

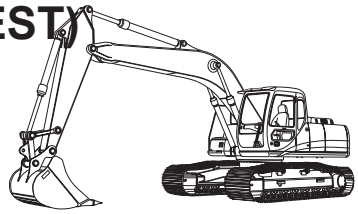

Connecting the EST

Select the programming/diagnostic cables to connect:

1. Electronic Service Tool Computer
2. 380002727 EMPS/EST Protocol Adapter Box
3. Power Supply
   - 380002724 AC Adapter Cable use port DC IN2
   - 380002725 Battery Adapter Cable use port DC IN1
4. ECM located under HVAC cover behind seat.
5. 380002726 EMPS/EST ECM Cable
6. 380002728 EMPS/EST RS232 Null Modem Cable

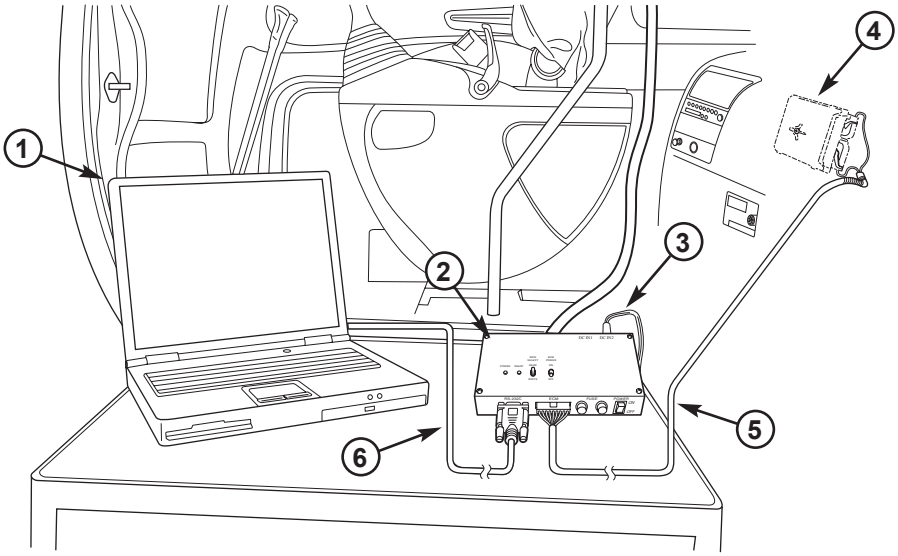

Start the Engine Download Tool - Isuzu EMPS

The Additional Tools screen provides a button linking the Electronic Service Tool to:

- Engine Diagnostic Tool - Isuzu EMPS

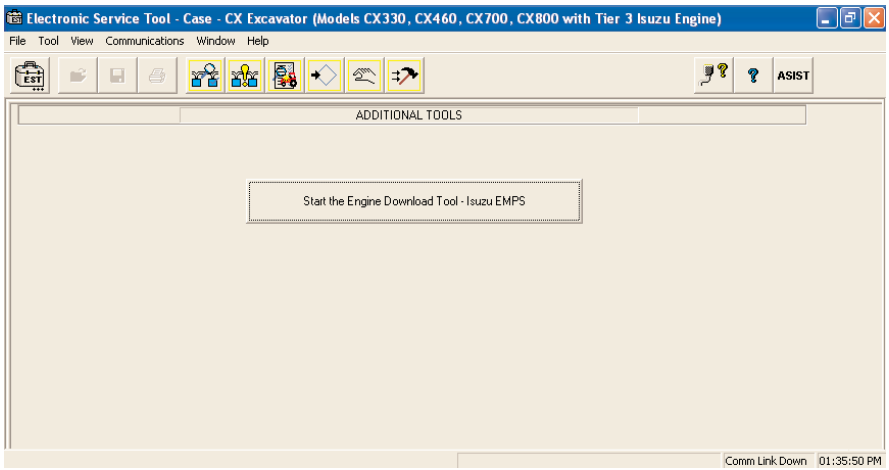

EMPS

The EMPS program is used to perform the following ECM service procedures:

- ECM Reflash
- Injector Replacement
- Replace ECM (same model)
- Factory Setting

1. The EMPS application is operated from its location on the Electronic Service Tool hard disk drive.

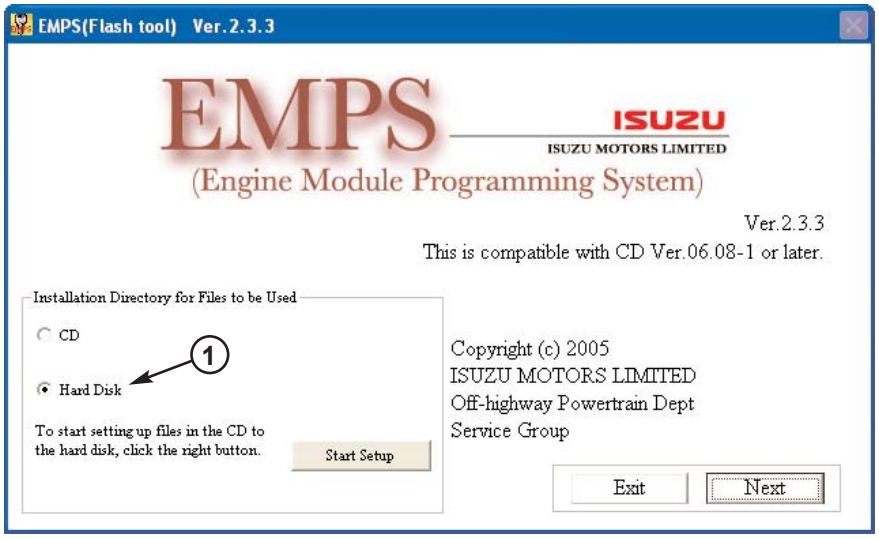

Copyright © 2006 CNH America LLC All Rights Reserved

https://truckmanualshub.com/

Preliminary ELECTRONIC SERVICE TOOL (EST)

Engine Module Programming System (EMPS) - Summary

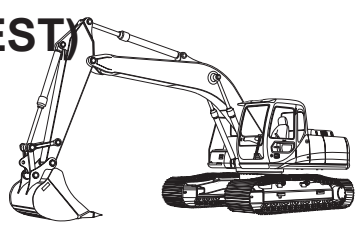

Selecting an EMPS Process

Select an EMPS operation from the Process Menu.

- **ECM Reflash -** Select when the ECM control program is suspected to have damaged/corrupted files. This selection reinstalls the same operating software files on the ECM as determined by current Serial Number listed on the ECM.
- **Injector Replacement -** Select when an injector(s) is/are replaced. This operation provides injector QR Code information to the ECM to optimize engine fuel system performance. Refer to diagram for injector QR Code locations.
- **Replace ECM (same model) -** Select when the ECM is replaced.
- **Factory Setting -** Select when the ECM control program is suspected to have damaged/corrupted files. Restores ECM to the factory settings as determined by a specific Serial Number.

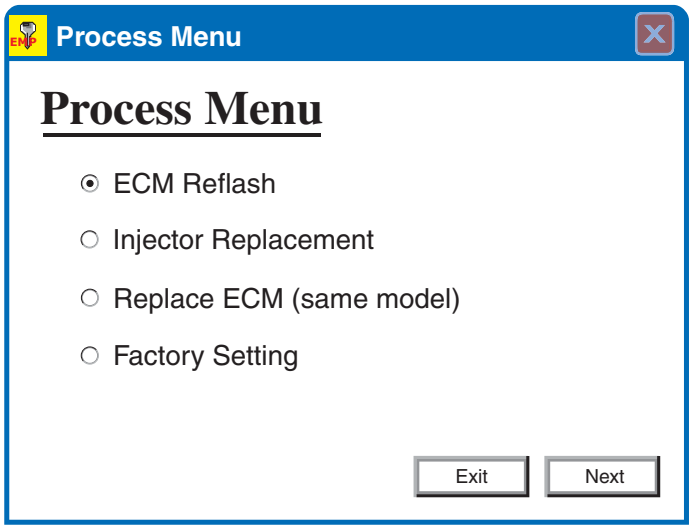

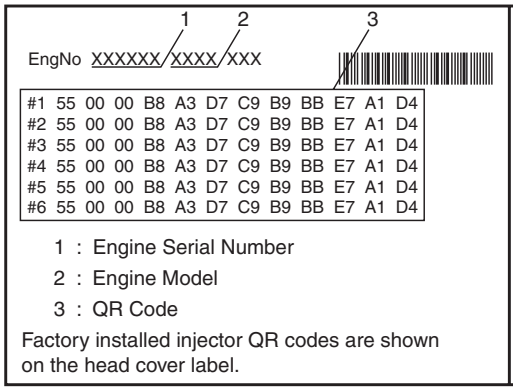

1 : Engine Serial Number
2 : Engine Model
3 : QR Code

Factory installed injector QR codes are shown on the head cover label.

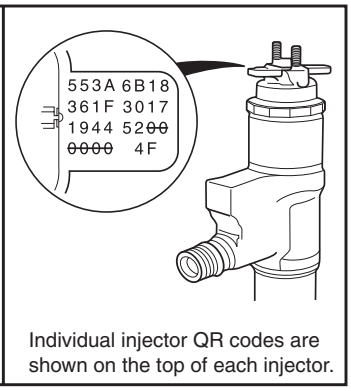

Individual injector QR codes are shown on the top of each injector.

Selecting the Manufacturer

Select SUMITOMO as the manufacturer for all CNH applications.

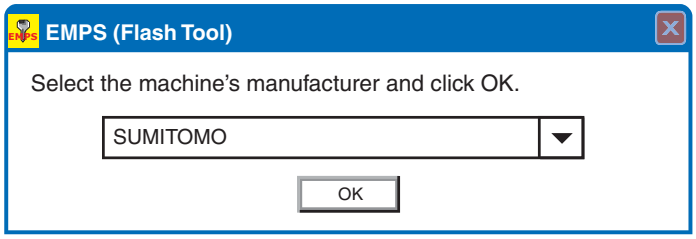

Clearing the ECM Memory

The engine will not operate properly unless the ECM memory is cleared.

- Install the vehicle ECM harnesses and then clear the ECM memory.

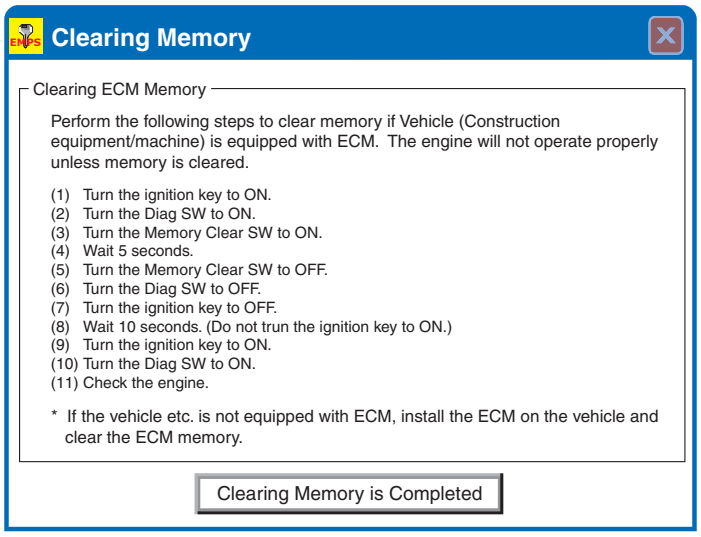

Copyright © 2006 CNH America LLC All Rights Reserved

https://truckmanualshub.com/

This page Is Intentionally Left Blank.