https://truckmanualshub.com/

WEAM000101

Operation & Maintenance Manual

PC20R-8
PC27R-8

HYDRAULIC EXCAVATOR

SERIAL NUMBER

PC20R-8 - F30791 and up

PC27R-8 - F31103 and up

WARNING

Unsafe use of this machine may cause serious injury or death. Operators and maintenance personnel must read this manual before operating or maintaining this machine. This manual should be kept inside the cab for reference and periodically reviewed by all personnel who will come into contact with the machine.

KOMATSU

Utility

Downloaded from www.Manualslib.com manuals search engine

https://truckmanualshub.com/

Downloaded from www.Manualslib.com manuals search engine

https://truckmanualshub.com/

1.1 FOREWORD

- This manual has been carried out by Komatsu Utility in order to supply their customers with all the necessary information on the machine and the safety regulations related to it, together with the use and maintenance instructions that enable the operator to exploit the capacity of the machine with optimal results and to keep the machine efficient over time.
- The operation manual, together with the spare parts catalogue, is an integral part of the machine and must accompany it, even when it is resold, until its final disposal.
- The manual must be handled with the greatest care and always kept on board the machine, so that it can be consulted at any moment; it must be placed in the appropriate compartment inside the seat support, where also the ownership documents and the logbook are usually kept.
- This manual must be given to the persons who have to use the machine and carry out the routine maintenance operations; they must read the contents carefully more than once, in such a way as to clearly understand what are the correct operating conditions and the dangerous conditions that must be avoided.
  In case of loss or damage, request a new copy to Komatsu Utility or your Komatsu Utility Dealer.
- The illustrations contained in this manual may represent machine configurations available on request.
  The machines are constantly upgraded in order to increase their efficiency and reliability; this manual sums up all the information regarding the state of technical progress at the moment in which the machine is launched on the market.
  Consult your Komatsu Utility Dealer for any updated information.
- Punctual periodic annotations regarding the maintenance operations that have been carried out are important to have a clear prospect of the situation and to know exactly what has been done and what has to be done after the next maintenance interval. Therefore, it is advisable to consult either the hour meter and the maintenance plan frequently.
- Over the years Komatsu Utility Dealers have gathered considerable experience in customer service.
  If more information is needed, do not hesitate to contact your Komatsu Utility Dealer: he always knows how to get the best performance from the machine, he can suggest the use of the equipment that is most suitable for specific needs and can provide the technical assistance necessary for any change that may be required to conform the machine to the safety standards and traffic rules.
  Furthermore, Komatsu Utility Dealers also ensure their assistance for the supply of Komatsu Utility genuine spare parts, which alone guarantee safety and interchangeability.
- The table included in this manual must be filled in with the machine data, which are the data that must always be indicated to the Dealer when requiring assistance and ordering spare parts.

CAUTION

- **The incorrect use of the machine and inappropriate maintenance operations may cause serious injuries and even death.**
- **Operators and maintenance personnel must carefully read this manual before using the machine or performing maintenance operations.**
- **Any serious accident that may occur during the use of the machine or during maintenance operations is due to failure to comply with the instructions given herein.**
- **The procedures and precautions described in this manual are valid for application to the machine only when it is used correctly.**
  If the machine is used for any purpose or in any way other than those described herein, the operator shall be responsible for his own safety and for the safety of any other person involved.

Downloaded from www.Manualslib.com manuals search engine

https://truckmanualshub.com/

1.2 INFORMATION ON SAFETY

Many accidents are caused by insufficient knowledge of and failure to comply with the safety regulations prescribed for the maintenance operations that must be performed on the machine.
In order to avoid accidents, before starting work and before carrying out any maintenance operation, carefully read and be sure to understand all the information and warnings contained in this manual and given on the plates applied onto the machine, so that you can follow the instructions without making mistakes.
To identify the messages regarding safety that are included in this manual and written on the machine plates, the following words have been used.

DANGER

- **This word is used in the safety warnings in the manual and on the plates when the situation is dangerous and it may possibly result in serious injuries or even death.**
  These messages describe the safety precautions to be taken in order to avoid any risk. Non-compliance with these instructions may also result in serious damage to the machine.

CAUTION

- **This word is used in the safety warnings in the manual and on the plates to signal risks that may cause moderate damage or injuries.**
  The message can be used even to indicate the risk of damage to the machine only.

IMPORTANT

- **This word is used when precautions are indicated, which must be taken to avoid actions that may shorten the life of the machine.**

Komatsu Utility cannot reasonably predict every circumstance that might involve a potential hazard during the operation or maintenance of the machine; for this reason, the safety messages included in this manual and applied onto the machine may not include all possible safety precautions.
If all the procedures and operations prescribed for this machine are kept to, you can be sure that the operator and the persons in the vicinity can work in total safety, with no risk of damaging the machine. In case of doubt regarding the safety measures necessary for some procedures, contact Komatsu Utility or your local Dealer.

DANGER

- **Before starting any maintenance operation, position the machine on a firm and level surface, lower the equipment to the ground, engage the safety locks of either the equipment and the controls and stop the engine.**

DANGER

- **To make the information clearer, some illustrations in this manual represent the machine without safety guards. Do not use the machine without guards and do not start the engine when the engine protection casing is open, if this is not expressly prescribed for some specific maintenance operations.**

Downloaded from www.Manualslib.com manuals search engine

https://truckmanualshub.com/

DANGER

- **It is strictly forbidden to modify the setting of the hydraulic system safety valves; Komatsu Utility cannot be held liable for any damage to persons, property or the machine, if this has been tampered with by modifying the standard setting of the hydraulic system.**

DANGER

- **Before carrying out any electrical welding, disconnect the battery and the alternator (See "2.8.13 PRECAUTIONS CONCERNING THE BATTERY AND THE ALTERNATOR").**

DANGER

- **Install only authorized additional equipment (See "6.1.3 CHARACTERISTICS OF THE OPTIONAL EQUIPMENT").**

Downloaded from www.Manualslib.com manuals search engine

https://truckmanualshub.com/

1.3 INTRODUCTION

1.3.1 INTENDED USES

The KOMATSU UTILITY MACHINES described in this manual have been designed and constructed to be used mainly for EXCAVATION and EARTH-MOVING OPERATIONS.

If provided with suitable safety devices, they can be used with authorized optional equipment having the characteristics illustrated at point “6.1 AUTHORIZED OPTIONAL EQUIPMENT”.

1.3.2 IMPROPER OR UNAUTHORIZED USES

CAUTION

- **This paragraph describes some of the improper or unauthorized uses of the machine; since it is impossible to predict all the possible improper uses, if the machine happens to be used for particular applications, contact your Komatsu Utility Dealer before carrying out the work.**

IMPORTANT

- **The instructions regarding the authorized optional equipment are given in the relevant operation and maintenance manuals; if the equipment is supplied by Komatsu Utility, these publications are enclosed to this manual.**
- **The instructions regarding the assembly of the authorized equipment, the controls requiring special arrangements on the machine and the hydraulic couplings necessary for the operation of the equipment are grouped in the final section of this manual.**

KOMATSU UTILITY MACHINES are constructed exclusively for the handling, excavation and treatment of inert materials; therefore, the following uses are absolutely forbidden:

- USE OF THE MACHINE BY MINORS OR INEXPERIENCED PERSONS.
- USE OF THE MACHINE FOR LIFTING PERSONS OR OBJECTS.
- TRANSPORT OF CONTAINERS WITH FLAMMABLE OR DANGEROUS FLUIDS.
- USE OF THE BUCKET FOR DRIVING OR EXTRACTING PILES.
- USE OF THE MACHINE FOR TOWING DAMAGED VEHICLES.

Downloaded from www.Manualslib.com manuals search engine

https://truckmanualshub.com/

1.3.3 MAIN CHARACTERISTICS

- Simple and easy operation
- Hydrostatic transmission obtained through two axial piston motors that operate epicyclic reduction gears.
- Upper structure rotation achieved through an orbital hydraulic motor (for PC20R only).
- Upper structure rotation achieved through an axial piston hydraulic motor acting on an epicyclic reduction gear (for PC27R only)
- Main equipment servolevers ensuring also combined movements that can be modulated proportionally and continually.
- Pedal controls for the boom swing and the optional equipment.
- Lever controls for travel and blade.
- Travel speed increase achieved through a pedal-operated push button.
- Complete series of instruments visible from the operating position.
- Lever accelerator.
- Easy maintenance with simplified intervals.

1.3.4 RUNNING-IN

Every machine is scrupulously adjusted and tested before delivery.
A new machine, however, must be used carefully for the first 100 hours, in order to ensure proper running-in of the various components.
If the machine is subjected to excessive work load at the beginning of operation, its potential yield and its functionality will be shortly and untimely reduced.
Every new machine must be used carefully, paying special attention to the following indications:

- After the start, let the engine idle for 5 minutes, in such a way as to warm it up gradually before actual operation.
- Avoid operating the machine with the limit loads allowed or at high speed.
- Avoid abrupt starts or accelerations, useless sudden decelerations and abrupt reversals.
- After the first 250 hours, carry out the following operations, in addition to those to be performed every 250 hours:
  1 - Change the oil in the travel reduction gears.
  2 - Check and adjust the engine valve clearance.

SYNTHETIC BIODEGRADABLE OIL TYPE HEES

On machines in which the synthetic biodegradable oil type HEES is used, the following operations are to be performed besides the standard maintenance operations:

- After the first 50 hours of operation, change the hydraulic circuit drain filter.
- After the first 500 hours of operation, change the hydraulic circuit oil.

☞ **IMPORTANT**

- **When changing the oil filters (cartridges), check their inner part to make sure that there are no deposits.**
  If considerable deposits are observed, find out what may have caused them before starting the machine.
- **The number of operating hours is indicated by the hour meter.**

Downloaded from www.Manualslib.com manuals search engine

https://truckmanualshub.com/

1.4 PRODUCT IDENTIFICATION

The KOMATSU UTILITY EXCAVATOR and its main components are identified by serial numbers stamped on the identification plates.
The serial number and the identification numbers of the components are the only numbers that must be indicated to the Dealer when requiring assistance and ordering spare parts.

1.4.1 MACHINE SERIAL NUMBER

The machine serial number is stamped on the front upper part of the main frame, on the left side.

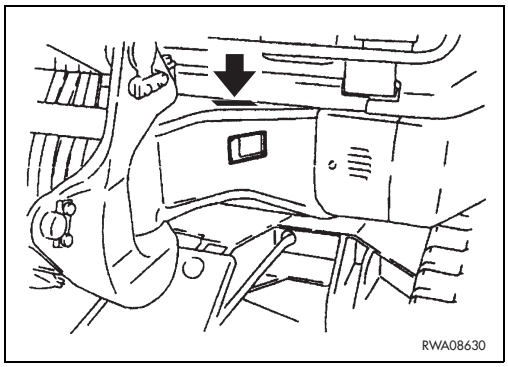

1.4.2 MACHINE IDENTIFICATION PLATE

The KOMATSU UTILITY EXCAVATORS described in the present manual are provided with the CE mark, which certifies that they are in compliance with the harmonized standards of the European Community.
The plate provided with the mark is applied onto the front wall of the main frame, on the left side.

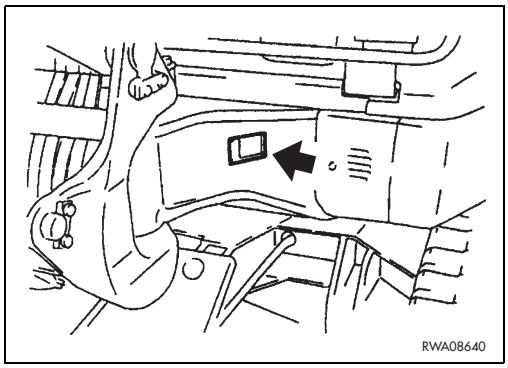

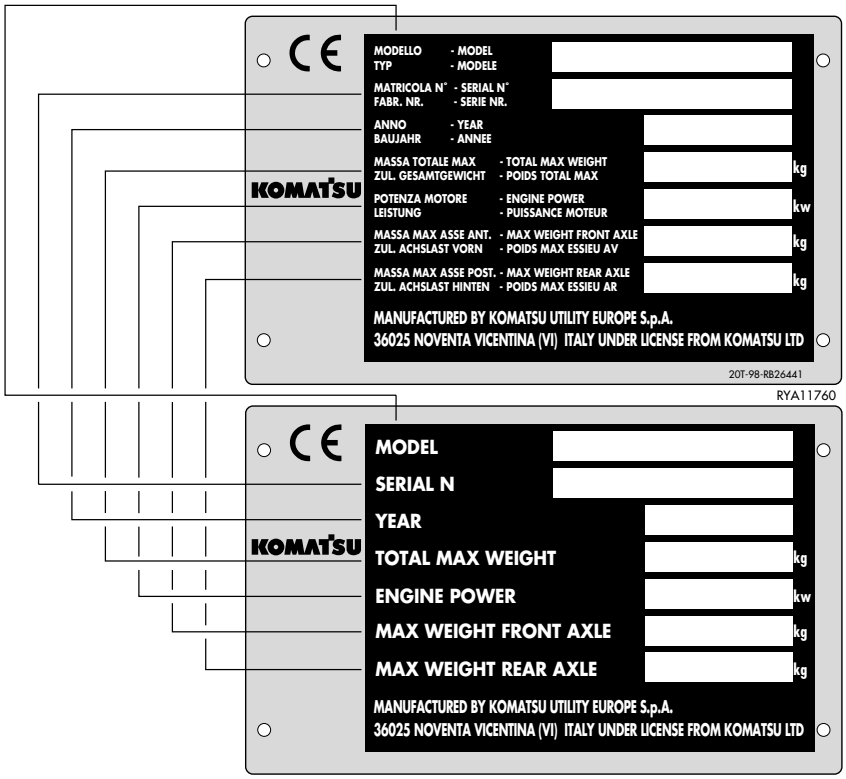

Downloaded from www.Manualslib.com manuals search engine

https://truckmanualshub.com/

1.4.3 ENGINE SERIAL NUMBER AND EXHAUST GAS EMISSION PLATE

The engine serial number is stamped on the plate positioned on the top of the engine cylinder head cover.

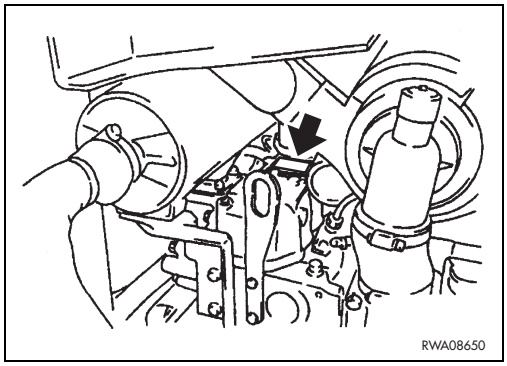

The exhaust gas emission plate is applied on the top of the engine cylinder head cover.

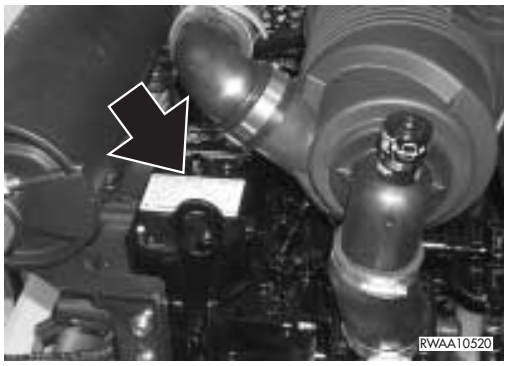

1.4.4 TRAVEL REDUCTION GEAR SERIAL NUMBER

The serial number of the travel reduction gear is stamped on the plate positioned on the outer side of the reduction gear cover.

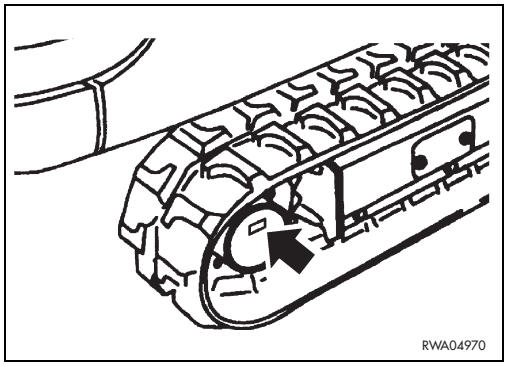

Downloaded from www.Manualslib.com manuals search engine

https://truckmanualshub.com/

1.4.5 SWING MOTOR SERIAL NUMBER (for PC20R only)

The serial number of the swing reduction gear is stamped on the plate positioned on the swing motor head.

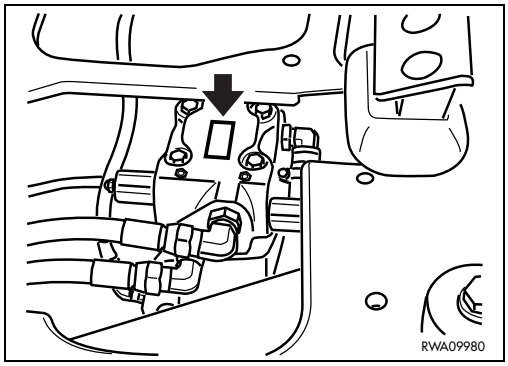

1.4.6 SWING REDUCTION GEAR SERIAL NUMBER (for PC27R only)

The serial number is stamped on the plate positioned laterally on the reduction gear body.

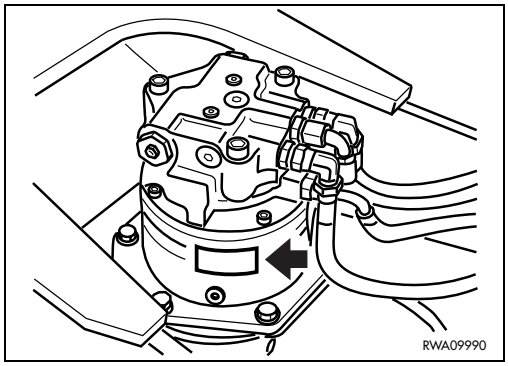

1.4.7 CAB SERIAL NUMBER

The CAB serial number is stamped on the plate positioned on the top left side.

Downloaded from www.Manualslib.com manuals search engine

https://truckmanualshub.com/

1.4.8 SERIAL NUMBERS AND DEALER'S ADDRESS

Machine n. _____ Model _____

Engine n. _____

Travel reduction gear n. _____

Swing motor (for PC20R only) n. _____

Swing reduction gear (for PC27R only) n. _____

Cab n. _____

Dealer:

_____

_____

_____

_____

Address: _____

_____

_____ Tel. _____

Person to contact: _____

NOTES: _____

Downloaded from www.Manualslib.com manuals search engine

https://truckmanualshub.com/

Downloaded from www.Manualslib.com manuals search engine

https://truckmanualshub.com/

Page

TABLE OF CONTENTS

1.1 FOREWORD 1

1.2 INFORMATION ON SAFETY 2

1.3 INTRODUCTION 4

1.3.1 INTENDED USES 4
1.3.2 IMPROPER OR UNAUTHORIZED USES 4
1.3.3 MAIN CHARACTERISTICS 5
1.3.4 RUNNING-IN 5

1.4 PRODUCT IDENTIFICATION 6

1.4.1 MACHINE SERIAL NUMBER 6
1.4.2 MACHINE IDENTIFICATION PLATE 6
1.4.3 ENGINE SERIAL NUMBER AND EXHAUST GAS EMISSION PLATE. 7
1.4.4 TRAVEL REDUCTION GEAR SERIAL NUMBER 7
1.4.5 SWING MOTOR SERIAL NUMBER (for PC20R only) 8
1.4.6 SWING REDUCTION GEAR SERIAL NUMBER (for PC27R only) 8
1.4.7 CAB SERIAL NUMBER 8
1.4.8 SERIAL NUMBERS AND DEALER'S ADDRESS 9

SAFETY AND ACCIDENT PREVENTION

2.1 SAFETY, NOISE AND VIBRATION PLATES 20

2.1.1 POSITION OF THE SAFETY PLATES 20
2.1.2 PICTOGRAMS AND RELEVANT MEANINGS 22
2.1.3 POSITION OF THE NOISE PLATES ON MACHINES WITH CAB 26
2.1.4 POSITION OF THE NOISE PLATES ON MACHINES WITH CANOPY 27
2.1.5 VIBRATIONS TO WHICH THE OPERATOR IS SUBJECTED 27

2.2 GENERAL PRECAUTIONS 28

2.2.1 GENERAL SAFETY RULES 28
2.2.2 SAFETY DEVICES AND GUARDS 28
2.2.3 CLOTHING AND PERSONAL PROTECTION ITEMS 28
2.2.4 UNAUTHORIZED MODIFICATIONS 29
2.2.5 LEAVING THE OPERATOR'S SEAT 29
2.2.6 GETTING ON AND OFF THE MACHINE 30
2.2.7 PREVENTING FIRES DUE TO FUEL AND OIL 30
2.2.8 PREVENTING BURNS 31
2.2.9 PREVENTING DAMAGE DUE TO ASBESTOS POWDER 31
2.2.10 PREVENTING DAMAGE CAUSED BY THE WORK EQUIPMENT 32
2.2.11 FIRE EXTINGUISHERS AND FIRST AID KIT 32
2.2.12 PRECAUTIONS CONCERNING THE CAB STRUCTURE 32
2.2.13 PRECAUTIONS CONCERNING THE EQUIPMENT 32

2.3 PRECAUTIONS TO BE TAKEN BEFORE STARTING THE ENGINE 33

2.3.1 SAFETY ON THE WORK SITE 33
2.3.2 FIRE PREVENTION 33
2.3.3 PRECAUTIONS TO BE TAKEN FOR THE OPERATOR'S CAB 33
2.3.4 ROOM VENTILATION 34
2.3.5 PRECAUTIONS TO BE TAKEN FOR THE LIGHTS 34
2.3.6 CLEANING THE WINDOWS - CHECKING THE WINDSHIELD WIPER BLADES 34

Downloaded from www.Manualslib.com manuals search engine

https://truckmanualshub.com/

Page

2.4 PRECAUTIONS TO BE TAKEN WHEN WORKING 35
2.4.1 STARTING THE ENGINE 35
2.4.2 CHECK THE DIRECTION BEFORE STARTING THE MACHINE 35
2.4.3 CHECKS FOR TRAVELLING IN REVERSE 35
2.4.4 MOVING THE MACHINE 36
2.4.5 MOVING ON SLOPES 37
2.4.6 WORKING ON SLOPES 38
2.4.7 UNAUTHORIZED OPERATIONS 38
2.4.8 PREVENTING ELECTROCUTION 39
2.4.9 VISIBILITY 40
2.4.10 WORKING ON ICY OR SNOW-COVERED SURFACES 40
2.4.11 PREVENTING DAMAGE CAUSED BY THE WORK EQUIPMENT 40
2.4.12 WORKING ON LOOSE GROUND 40
2.4.13 PARKING THE MACHINE 41
2.5 TRANSPORTING THE MACHINE ON MOTOR VEHICLES 42
2.5.1 LOADING AND UNLOADING 42
2.5.2 TRANSPORT 42
2.6 BATTERY 43
2.6.1 PREVENTING RISKS THAT MAY BE DUE TO THE BATTERY 43
2.6.2 STARTING WITH BOOSTER CABLES 43
2.7 PRECAUTIONS FOR THE REMOVAL 44
2.8 PRECAUTIONS FOR MAINTENANCE 45
2.8.1 WARNING PLATES 45
2.8.2 TOOLS 45
2.8.3 PERSONNEL 45
2.8.4 EQUIPMENT 46
2.8.5 WORKING UNDER THE MACHINE 46
2.8.6 CLEANING THE MACHINE 46
2.8.7 USE OF THE ENGINE DURING MAINTENANCE OPERATIONS 47
2.8.8 PERIODICAL CHANGE OF THE PARTS THAT ARE CRITICAL FOR SAFETY 47
2.8.9 STOP THE ENGINE BEFORE CARRYING OUT ANY MAINTENANCE OPERATION OR INSPECTION 47
2.8.10 RULES TO BE FOLLOWED DURING FUEL OR OIL TOPPING UP 48
2.8.11 CHECKING THE COOLANT LEVEL IN THE RADIATOR 48
2.8.12 USING LAMPS 48
2.8.13 PRECAUTIONS CONCERNING THE BATTERY AND THE ALTERNATOR 49
2.8.14 PRECAUTIONS CONCERNING THE STARTER 49
2.8.15 HANDLING HIGH-PRESSURE PIPES 50
2.8.16 PRECAUTIONS TO BE TAKEN WHEN HANDLING HIGH-PRESSURE OIL 50
2.8.17 PRECAUTIONS FOR MAINTENANCE OPERATIONS AT HIGH TEMPERATURES AND HIGH PRESSURE 50
2.8.18 COOLING FAN AND BELT 51
2.8.19 WASTE MATERIALS 51
2.8.20 PRECAUTIONS FOR THE USE OF THE synthetic biodegradable oil type HEES 51

Downloaded from www.Manualslib.com manuals search engine

https://truckmanualshub.com/

Page

DESCRIPTION AND USE OF THE MACHINE

3.1 SAFETY LOCKS . . . 54
3.1.1 MACHINE LOCKS . . . 54

3.2 GENERAL VIEWS . . . 55
3.2.1 GENERAL VIEW OF THE MACHINE WITH CAB . . . 55
3.2.2 GENERAL VIEW OF THE MACHINE WITH CANOPY . . . 56
3.2.3 GENERAL VIEW OF THE DRIVER'S SEAT . . . 57

3.3 INSTRUMENTS AND CONTROLS . . . 58
3.3.1 INSTRUMENTS . . . 58
3.3.2 WARNING LIGHTS . . . 60
3.3.3 SWITCHES AND PUSH BUTTONS . . . 62
3.3.4 ELECTRICAL ACCESSORIES . . . 65
3.3.5 MACHINE CONTROLS . . . 67

3.4 FUSES AND RELAYS . . . 75
3.4.1 FUSES . . . 75
3.4.1.1 EQUIPMENT FUSES . . . 75
3.4.1.2 MAIN FUSE . . . 76
3.4.2 RELAYS . . . 77

3.5 GUARDS AND DRIVER'S SEAT . . . 78
3.5.1 ENGINE HOOD . . . 78
3.5.2 RIGHT COUNTERWEIGHT . . . 79
3.5.3 CANOPY . . . 79
3.5.4 CAB . . . 80
3.5.5 VENTILATION AND HEATING . . . 83
3.5.6 SEAT . . . 84
3.5.7 SAFETY BELT . . . 84
3.5.8 EMERGENCY EXIT . . . 85
3.5.9 TECHNICAL DOCUMENTATION CASE . . . 85
3.5.10 FIRE EXTINGUISHER . . . 86
3.5.11 FIRST AID KIT . . . 86

3.6 USE OF THE MACHINE . . . 87
3.6.1 CHECKS BEFORE STARTING THE ENGINE . . . 87
3.6.1.1 VISUAL CHECKS . . . 87
3.6.1.2 DAILY CHECKS . . . 87
3.6.1.3 OPERATIONAL CHECKS . . . 88
3.6.2 STARTING THE ENGINE . . . 89
3.6.2.1 STARTING WITH WARM ENGINE OR IN TEMPERATE CLIMATES . . . 89
3.6.2.2 STARTING WITH COLD ENGINE OR IN COLD CLIMATES . . . 90
3.6.3 WARMING THE ENGINE . . . 91
3.6.4 HEATING THE HYDRAULIC OIL . . . 91
3.6.5 HOW TO MOVE THE MACHINE . . . 91
3.6.5.1 STEERING (CHANGING DIRECTION) . . . 93
3.6.5.2 MOVING ON SLOPES . . . 94
3.6.5.3 MAXIMUM IMMERSION DEPTH . . . 95

Downloaded from www.Manualslib.com manuals search engine

https://truckmanualshub.com/

Page

3.7 PARKING THE MACHINE 96
3.7.1 PARKING ON LEVEL GROUND 96
3.7.2 PARKING ON SLOPES 97
3.8 STOPPING THE ENGINE 98
3.9 TRANSPORTING THE MACHINE ON MOTOR VEHICLES 99
3.9.1 LOADING AND UNLOADING THE MACHINE 99
3.9.2 TRANSPORT 100
3.10 LIFTING THE MACHINE 101
3.11 PRECAUTIONS TO BE TAKEN IN THE COLD SEASON 102
3.11.1 FUEL AND LUBRICANTS 102
3.11.2 COOLANT 102
3.11.3 BATTERY 102
3.11.4 OTHER PRECAUTIONS 103
3.11.5 PRECAUTIONS TO BE TAKEN AT THE END OF WORK 103
3.12 PRECAUTIONS TO BE TAKEN IN THE WARM SEASON 104
3.13 USING THE WORK EQUIPMENT 105
3.13.1 ORGANIZING THE WORK AREA 105
3.13.2 POSITIONING THE MACHINE FOR DIGGING OPERATIONS 106
3.13.3 DIGGING METHOD 107
3.13.4 CHANGING THE BUCKET 108
3.14 LONG PERIODS OF INACTIVITY 109
3.14.1 BEFORE THE PERIOD OF INACTIVITY 109
3.14.2 DURING THE PERIOD OF INACTIVITY 110
3.14.3 AFTER THE PERIOD OF INACTIVITY 110
3.15 TROUBLESHOOTING 111
3.15.1 OCCURRENCES THAT ARE NOT FAILURES 111
3.15.2 HOW TO REMOVE THE MACHINE 111
3.15.3 AFTER THE FUEL HAS RUN OUT 112
3.15.4 IF THE BATTERY IS DOWN 112
3.15.4.1 STARTING WITH BOOSTER CABLES 113
3.15.5 OTHER TROUBLES 114
3.15.5.1 ELECTRICAL CIRCUIT 114
3.15.5.2 HYDRAULIC SYSTEM 114
3.15.5.3 ENGINE 115

Downloaded from www.Manualslib.com manuals search engine

https://truckmanualshub.com/

Page

MAINTENANCE

4.1 GUIDE TO MAINTENANCE 118

4.2 MAINTENANCE NOTES 120

4.2.1 NOTES REGARDING THE ENGINE 120

4.2.1.1 ENGINE OIL 120

4.2.1.2 COOLANT 120

4.2.1.3 FUEL 121

4.2.2 NOTES REGARDING THE HYDRAULIC SYSTEM 121

4.2.3 NOTES REGARDING THE ELECTRICAL SYSTEM 122

4.2.4 NOTES REGARDING LUBRICATION 122

4.2.5 PARTS SUBJECT TO WEAR THAT PERIODICALLY NEED CHANGING 123

4.3 FUEL, COOLANT AND LUBRICANTS 124

4.3.1 HOMOLOGATED HEES SYNTHETIC BIODEGRADABLE LUBRICANTS 126

4.4 DRIVING TORQUES FOR SCREWS AND NUTS 127

4.4.1 STANDARD DRIVING TORQUES 127

4.4.2 SPECIFIC DRIVING TORQUES 127

4.5 LUBRICATION 128

4.5.1 LUBRICATION DIAGRAM 128

4.6 PERIODICAL CHANGE OF THE COMPONENTS THAT ARE CONNECTED WITH SAFETY 129

4.6.1 CRITICAL PARTS FOR SAFETY 130

4.7 MAINTENANCE PLAN 133

4.7.1 WHEN REQUIRED 136

4.7.1.a WASHING THE COOLING CIRCUIT 136

4.7.1.b DRAINING THE FUEL TANK 137

4.7.1.c CHECKING THE ELECTRICAL SYSTEM 138

4.7.1.d CHECKING THE STEEL TRACK TENSION 138

4.7.1.e CHECKING THE RUBBER TRACKS 140

4.7.1.f CHECKING THE RUBBER TRACK TENSION 142

4.7.1.g CHANGING THE RUBBER TRACK 144

4.7.1.h CHECKING, CLEANING OR CHANGING THE AIR CLEANER CARTRIDGE . . 146

4.7.2 MAINTENANCE INTERVALS IN CASE OF USE OF THE DEMOLITION HAMMER (BREAKER) 147

4.7.2.a CHANGING THE HYDRAULIC OIL FILTER 147

4.7.2.b CHANGING THE HYDRAULIC OIL 147

4.7.3 CHECKS BEFORE STARTING 148

4.7.3.a VARIOUS CHECKS 148

4.7.3.b CHECKING THE COOLANT LEVEL 148

4.7.3.c CHECKING THE FUEL LEVEL 149

4.7.3.d CHECKING THE ENGINE OIL LEVEL 149

4.7.3.e CHECKING THE OIL LEVEL IN THE HYDRAULIC CIRCUIT 150

4.7.3.f CHECKING THE AIR CLEANER CLOGGING INDICATOR 151

4.7.3.g CHECKING THE FUEL FILTER FOR SEDIMENT AND WATER 151

4.7.4 MAINTENANCE AFTER THE FIRST 50 HOURS OF OPERATION (Only for machines in which the synthetic biodegradable oil type HEES is used) 152

4.7.5 MAINTENANCE EVERY 100 HOURS OF OPERATION 153

4.7.5.a LUBRICATING THE JOINTS AND THE BALL-BEARING RING 153

Downloaded from www.Manualslib.com manuals search engine

https://truckmanualshub.com/

Page

4.7.6 MAINTENANCE AFTER THE FIRST 250 HOURS OF OPERATION 155
4.7.7 MAINTENANCE EVERY 250 HOURS OF OPERATION 155
4.7.7.a ADJUSTING THE FAN BELT TENSION 155
4.7.7.b CHECKING THE BATTERY ELECTROLYTE LEVEL 156
4.7.7.c CHECKING THE OIL LEVEL IN THE TRAVEL REDUCTION GEARS 156
4.7.7.d CHANGING THE HYDRAULIC SYSTEM OIL FILTER 157
4.7.7.e CHANGING THE ENGINE OIL 158
4.7.8 MAINTENANCE AFTER THE FIRST 500 HOURS OF OPERATION (Only for machines in which the synthetic biodegradable oil type HEES is used) 159
4.7.9 MAINTENANCE EVERY 500 HOURS OF OPERATION 159
4.7.9.a CHANGING THE ENGINE OIL FILTER 159
4.7.9.b CHANGING THE FUEL FILTER 160
4.7.9.c CHANGING THE FUEL PUMP PRECLEANER 161
4.7.9.d CLEANING THE OUTSIDE OF THE RADIATORS 162
4.7.9.e DRAINING THE HYDRAULIC OIL TANK (Only for machines in which the synthetic biodegradable oil type HEES is used) 163
4.7.10 MAINTENANCE EVERY 1000 HOURS OF OPERATION 164
4.7.10.a CHANGING THE OIL IN THE TRAVEL REDUCTION GEARS 164
4.7.11 MAINTENANCE EVERY 2000 HOURS OF OPERATION 165
4.7.11.a CHANGING THE HYDRAULIC SYSTEM OIL AND CLEANING THE SUCTION FILTER 165
4.7.11.b CHANGING THE COOLANT 168
4.7.11.c CHECKING AND ADJUSTING THE ENGINE VALVE CLEARANCE 169
4.7.11.d CHECKING THE ALTERNATOR AND THE STARTER 169

TECHNICAL SPECIFICATIONS

5.1 TECHNICAL DATA 172
5.1.1 STANDARD OVERALL DIMENSIONS (for model PC20R only) 172
5.1.2 TECHNICAL CHARACTERISTICS PC20R 173
5.1.3 STANDARD OVERALL DIMENSIONS (for model PC27R only) 174
5.1.4 TECHNICAL CHARACTERISTICS PC27R 175
5.1.5 LIFTING CAPACITY WITH CAB (for model PC20R only) 176
5.1.6 LIFTING CAPACITY WITH CANOPY (for model PC20R only) 177
5.1.7 LIFTING CAPACITY WITH CAB (for model PC27R only) 178
5.1.8 LIFTING CAPACITY WITH CANOPY (for model PC27R only) 179

Downloaded from www.Manualslib.com manuals search engine

https://truckmanualshub.com/

Page

AUTHORIZED OPTIONAL EQUIPMENT

6.1 AUTHORIZED OPTIONAL EQUIPMENT 182
6.1.1 PRECAUTIONS REGARDING SAFETY 182
6.1.2 PRECAUTIONS REGARDING THE INSTALLATION OF EQUIPMENT 183
6.1.3 CHARACTERISTICS OF THE OPTIONAL EQUIPMENT 184
6.2 ARRANGEMENT FOR THE INSTALLATION OF THE DEMOLITION HAMMER (BREAKER) 185
6.2.1 DESCRIPTION AND CONTROL 185
6.2.2 USE OF THE DEMOLITION HAMMER AND RULES TO BE OBSERVED 185
6.2.3 INSTALLING AND REMOVING THE DEMOLITION HAMMER 189
6.2.3.1 INSTALLING THE HAMMER 189
6.2.3.2 REMOVING THE HAMMER 190
6.2.4 MAINTENANCE 190
6.3 ARRANGEMENT FOR THE OPERATION OF OPTIONAL EQUIPMENT 191
6.3.1 SELECTION VALVE (1) 191
6.3.2 CONTROL PEDAL (2) 192
6.3.3 ASSEMBLYING AND CONNECTING THE EQUIPMENT 193
6.3.4 MAINTENANCE 194

Downloaded from www.Manualslib.com manuals search engine

https://truckmanualshub.com/

Downloaded from www.Manualslib.com manuals search engine

https://truckmanualshub.com/

SAFETY AND ACCIDENT PREVENTION

Downloaded from www.Manualslib.com manuals search engine

https://truckmanualshub.com/

2.1 SAFETY, NOISE AND VIBRATION PLATES

2.1.1 POSITION OF THE SAFETY PLATES

- The safety plates must always be legible and in good conditions; for this reason, if they are dirty with dust, oil or grease, it is necessary to clean them with a solution made of water and detergent.
  Do not use fuel, petrol or solvents.
- If the plates are damaged, ask for new ones to Komatsu Utility or to your Komatsu Utility Dealer.
- In case of replacement of a component provided with a safety plate, make sure that this plate is applied also on the new piece.
- The machine can be provided with other plates in addition to those indicated below; keep also to the instructions given in the additional plates, in any case.

MACHINE WITH CAB

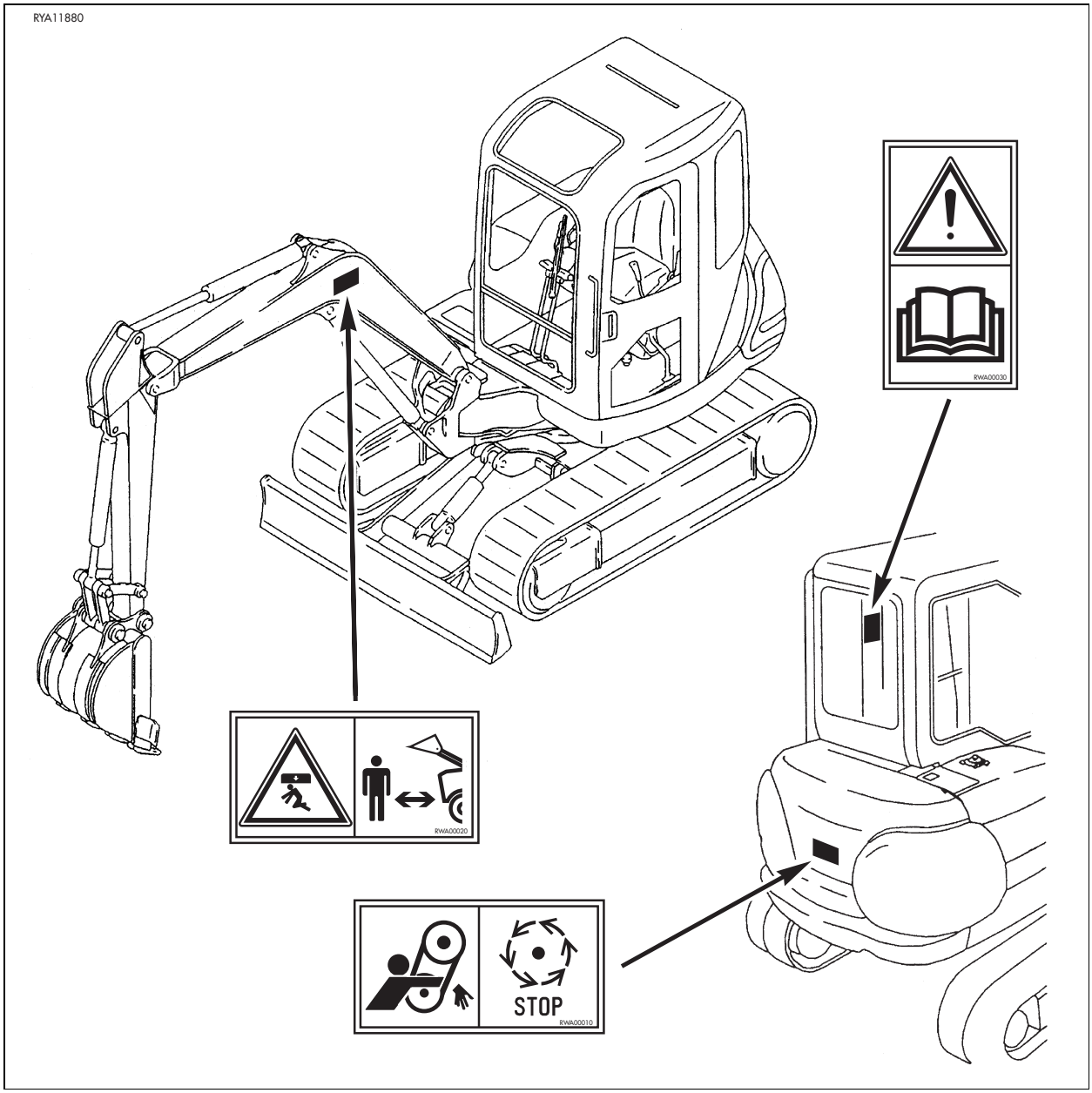

Downloaded from www.Manualslib.com manuals search engine

https://truckmanualshub.com/

MACHINE WITH CANOPY

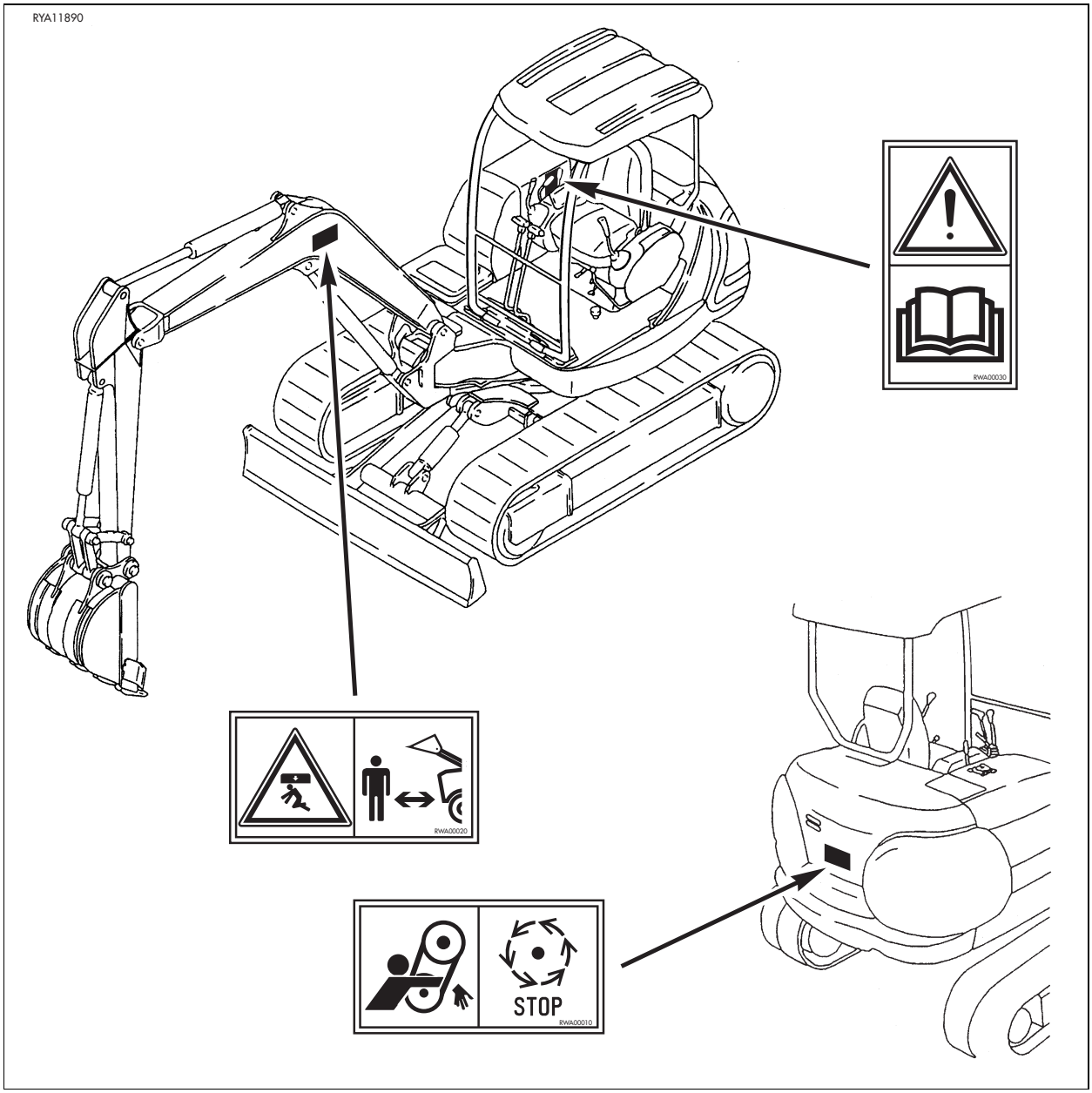

Downloaded from www.Manualslib.com manuals search engine

https://truckmanualshub.com/

2.1.2 PICTOGRAMS AND RELEVANT MEANINGS

The warning and danger plates applied onto the machine are accompanied or represented by pictograms.
The personnel in charge with the operation and maintenance of the machine must know the symbols contained in the pictograms perfectly; the following description illustrates what they look like and their respective meanings.

DANGER IN THE WORK AREA

- Do not approach or stand within the equipment operating radius when the boom and the bucket are raised.

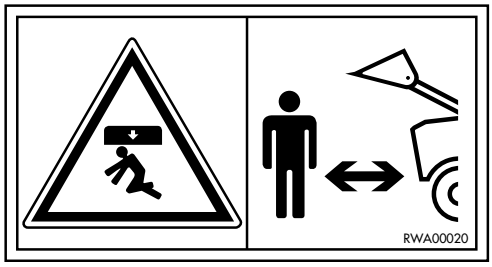

DO NOT OPEN THE HOOD

- Do not open or remove the hood when the engine is running.

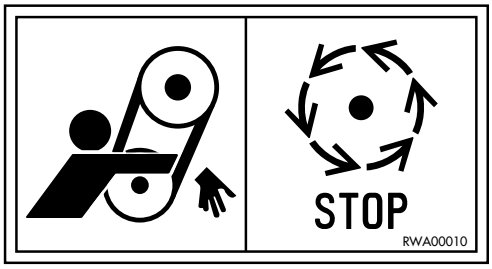

CONSULT THE MANUAL

- Carefully read the contents of the manual before using the machine or performing maintenance operations.

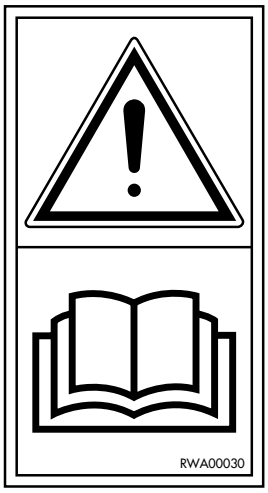

HYDRAULIC OIL TOPPING UP

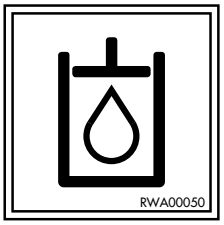

Downloaded from www.Manualslib.com manuals search engine

https://truckmanualshub.com/

FILLING THE HYDRAULIC SYSTEM WITH OIL

(Only for machines in which the synthetic biodegradable oil type HEES is used)

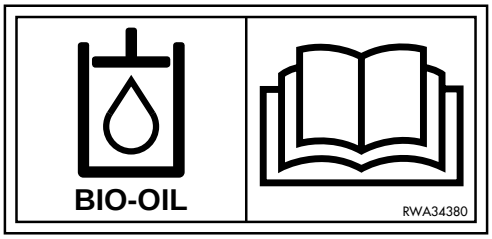

REFUELLING

ENGINE LUBRICATING OIL FILTER

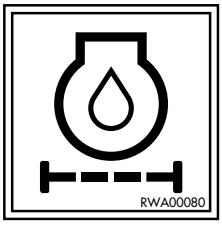

FUEL FILTER

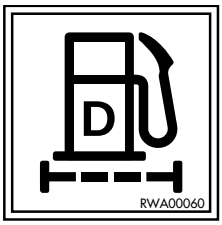

ENGINE AIR SUCTION FILTER

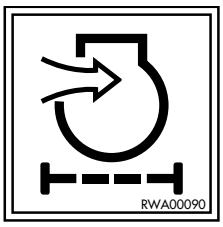

ENGINE COOLANT

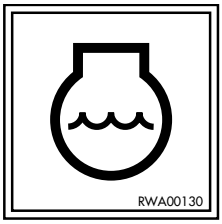

Downloaded from www.Manualslib.com manuals search engine

https://truckmanualshub.com/

ENGINE COOLANT PRESSURE

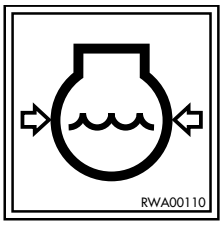

HYDRAULIC OIL LEVEL

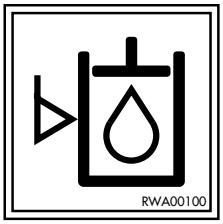

HYDRAULIC OIL FILTER

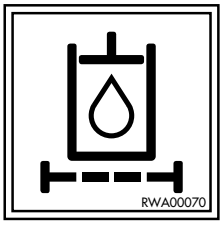

ELECTRIC OUTLET

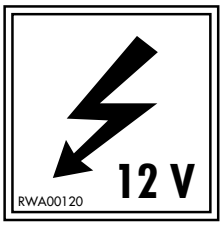

ANCHORAGE POINT

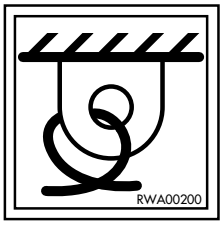

EMERGENCY EXIT

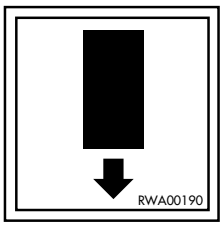

Downloaded from www.Manualslib.com manuals search engine

https://truckmanualshub.com/

LIFTING POINT

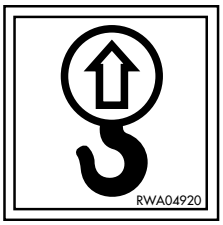

DO NOT LIFT MORE THAN 1000 kg

Downloaded from www.Manualslib.com manuals search engine

https://truckmanualshub.com/

2.1.3 POSITION OF THE NOISE PLATES ON MACHINES WITH CAB

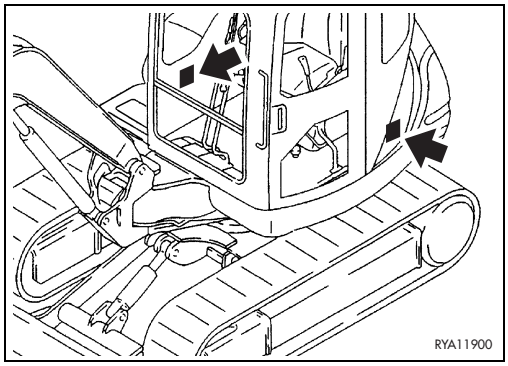

- The noise plates must always be legible and in good conditions; for this reason, if they are dirty with dust, oil or grease, it is necessary to clean them with a solution made of water and detergent.
  Do not use fuel, petrol or solvents.
- If the plates are damaged, ask for new ones to Komatsu Utility or to your Komatsu Utility Dealer.
- In case of replacement of a component provided with a noise plate, make sure that this plate is applied also on the new piece.

NOISE OUTSIDE THE CAB

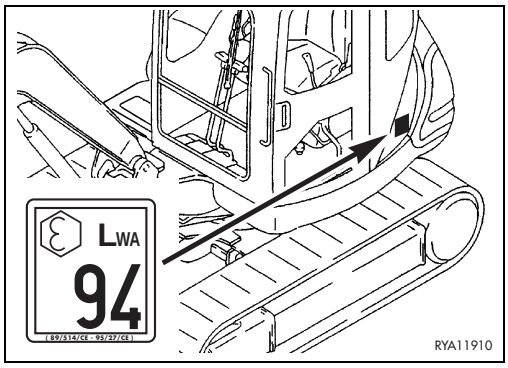

- This value indicates the noise level outside the machine and refers to the noise perceived by persons in the vicinity of the work area.

NOISE INSIDE THE CAB

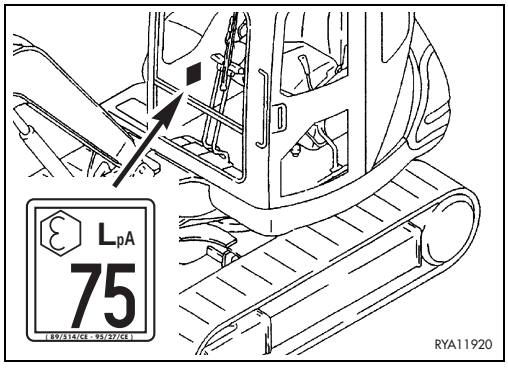

- This value indicates the maximum noise level perceived by the operator’s ears inside the cab when this is completely closed.

Downloaded from www.Manualslib.com manuals search engine

https://truckmanualshub.com/

2.1.4 POSITION OF THE NOISE PLATES ON MACHINES WITH CANOPY

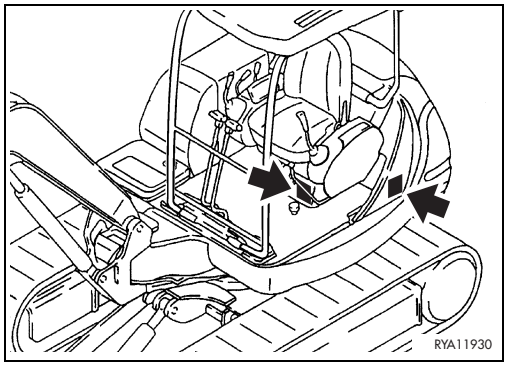

- The noise plates must always be legible and in good conditions; for this reason, if they are dirty with dust, oil or grease, it is necessary to clean them with a solution made of water and detergent.
  Do not use fuel, petrol or solvents.
- If the plates are damaged, ask for new ones to Komatsu Utility or to your Komatsu Utility Dealer.
- In case of replacement of a component provided with a noise plate, make sure that this plate is applied also on the new piece.

EXTERNAL NOISE

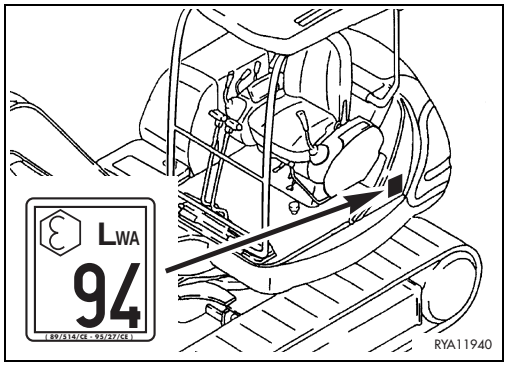

- This value indicates the noise level outside the machine and refers to the noise perceived by persons in the vicinity of the work area.

NOISE PERCEIVED BY THE OPERATOR

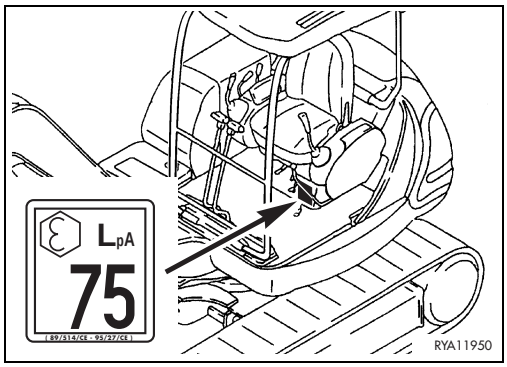

- This value indicates the maximum noise level perceived by the operator's ears.

2.1.5 VIBRATIONS TO WHICH THE OPERATOR IS SUBJECTED

- According to the results of the tests carried out to determine the vibrations transmitted to the operator by the machine, the upper limbs are subjected to vibrations lower than 2.5 m/sq.sec., while the seated part of the body is subjected to vibrations lower than 0.5 m/sq.sec.

Downloaded from www.Manualslib.com manuals search engine

https://truckmanualshub.com/

2.2 GENERAL PRECAUTIONS

2.2.1 GENERAL SAFETY RULES

- Only trained and authorized personnel can use the machine and perform maintenance operations.
- Follow all the safety rules, precautions and instructions when using the machine or performing maintenance operations.
- When working with other operators or when the work site is often occupied by other operators, make sure that everyone knows and understands all the agreed signals and, in any case, that everyone works in such a way as to be able to see the machine and to be visible to the operator.

2.2.2 SAFETY DEVICES AND GUARDS

- Make sure that all the guards and covers are in the correct position. Have guards and covers changed or repaired if damaged. Neither use the machine without guards, nor remove the guards when the engine is running.
- Always use the proper safety devices to lock the machine when parking and fasten the safety belt.
- For the safety devices, see “3.1 SAFETY LOCKS”.
- For the safety belt, see “3.5.7 SAFETY BELT”.
- Do not remove the safety devices and always keep them in good operating conditions.
- Any improper use of the safety devices may result in serious injuries or even death.

2.2.3 CLOTHING AND PERSONAL PROTECTION ITEMS

- Do not wear large or loose clothes, rings and watches and do not approach the machine with loose long hair, since they can get entagled in the moving parts of the machine and cause serious injuries or damage.
  Avoid also wearing clothes dirty with oil or fuel, since they are flammable.
- Wear a hard hat, goggles, safety shoes, mask, gloves and headphones when operating the machine or performing maintenance operations.
- Always wear safety goggles, a hard hat and heavy gloves if your job involves scattering metal chips or minute materials; these precautions are particularly useful when driving the equipment connection pins with a hammer and when blowing compressed air into the air filter and the radiator to clean them. During these operations, make also sure that no one is standing or working near the machine without the necessary protections.
- When working for 8 hours with a noise level exceeding 90 dBA, it is necessary to use headphones or ear plugs and be particularly careful, especially at the end of the work shift.

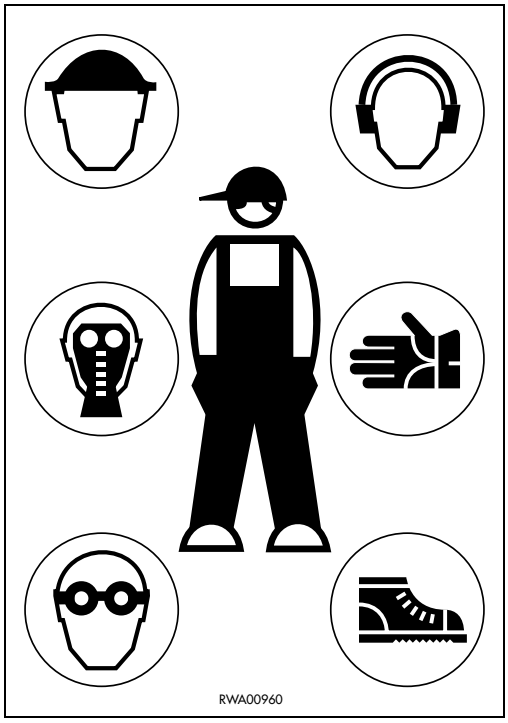

Downloaded from www.Manualslib.com manuals search engine

https://truckmanualshub.com/

2.2.4 UNAUTHORIZED MODIFICATIONS

- Any modification made without the authorization of Komatsu Utility can involve hazards.
- Before making a modification, consult your Komatsu Utility Dealer. Komatsu Utility declines any responsibility for injuries or damage caused by unauthorized modifications.

2.2.5 LEAVING THE OPERATOR'S SEAT

- When leaving the operator's seat, even if temporarily, make sure that the machine is in a safe position. (See "2.4.13 PARKING THE MACHINE").
- Before leaving the operator's seat, carry out the following operations in the sequence indicated below:
  1 - Rest the equipment onto the ground.
  2 - Connect the safety devices of the boom swing, optional equipment and upper structure rotation controls.
  3 - Lock the equipment control by shifting the safety device lever to the lock position.
  4 - Stop the engine (See "3.8 STOPPING THE ENGINE").

If you have to go so far away that you will not be able to see the machine, extract the ignition key.

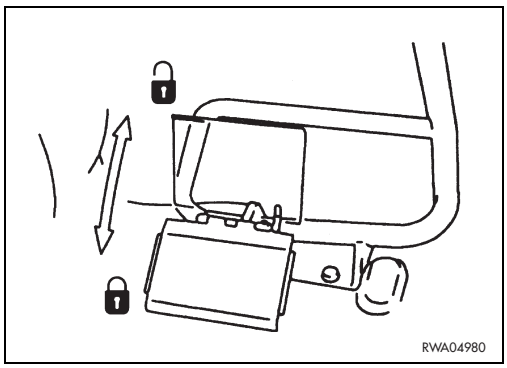

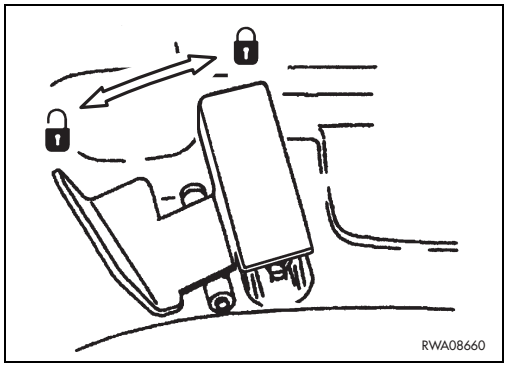

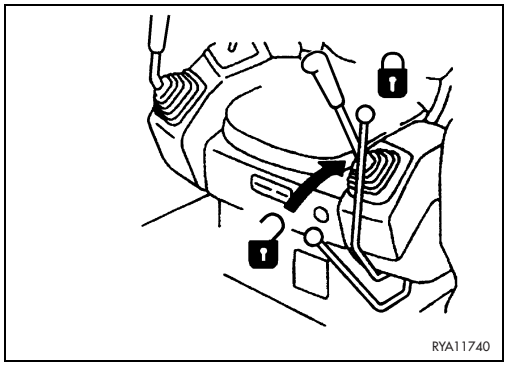

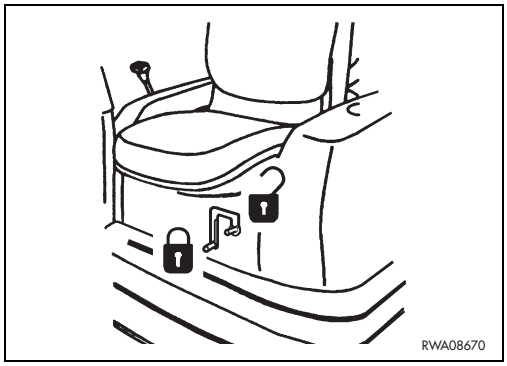

Downloaded from www.Manualslib.com manuals search engine

https://truckmanualshub.com/

2.2.6 GETTING ON AND OFF THE MACHINE

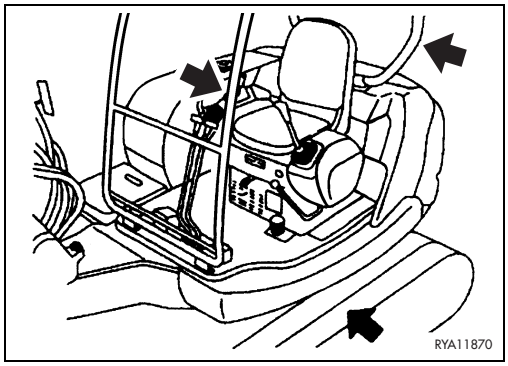

- Do not jump on or off the machine, either when it is at rest and when it is moving.
- When getting on or off the machine, always use the handles and the tracks; get on and off the machine very carefully.
- Never hold or rest on the control levers.
- Either when getting on and when getting off the machine, always maintain three points of contact (holding or resting points), in order to avoid losing your balance and falling down.
- Tighten the handle connection screws if they are loose and clean the handles and tracks if they are dirty with oil or grease. Carefully clean the cab floor if it is dirty with oil, grease, mud or rubble.

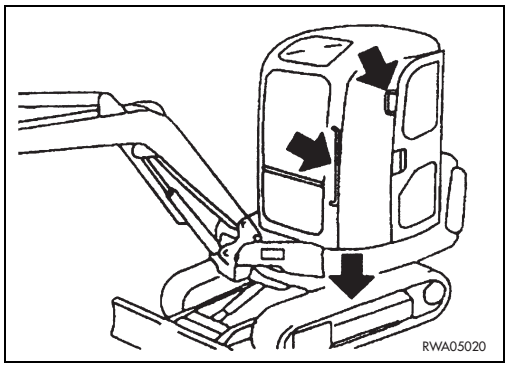

2.2.7 PREVENTING FIRES DUE TO FUEL AND OIL

Fuel, oil and some types of antifreeze can be easily ignited if they get in contact with a flame. Fuel is particularly flammable and therefore extremely hazardous.

- Keep any naked flame away from flammable fluids.
- Stop the engine and do not smoke when refuelling.
- Top up with fuel and oil only after stopping the engine and in well ventilated areas.
- Top up with fuel and oil in a well delimited area and do not allow unauthorized persons to approach.
- When refuelling, hold the fuel gun firmly and keep it constantly in contact with the filler until you have finished, in order to avoid sparks due to static electricity.
- After topping up, tighten the fuel and oil safety caps securely.
- Do not fill the tank completely, in order to leave room for the fuel to expand.
- In case some fuel is spilled, wipe it up immediately.

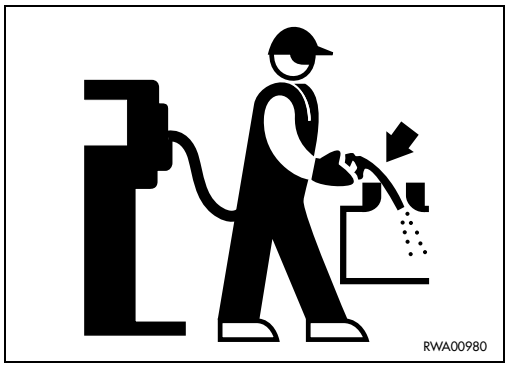

Downloaded from www.Manualslib.com manuals search engine

https://truckmanualshub.com/

2.2.8 PREVENTING BURNS

- If the engine coolant, the engine oil and the hydraulic oil are hot, use heavy cloths and wear gloves, heavy clothing and safety goggles before carrying out any check or touching the hot parts.
- Before checking the coolant level, stop the engine and let the fluid cool down.
  If a check is necessary due to the overheating of the engine, slowly loosen the radiator plug to release any residual pressure before removing it. The hot fluid that spurts out may cause serious burns.
- Before checking the engine oil and hydraulic circuit oil levels, stop the engine and let the oil cool down. The hot oil that can be sprayed out of the tank may cause serious burns.

2.2.9 PREVENTING DAMAGE DUE TO ASBESTOS POWDER

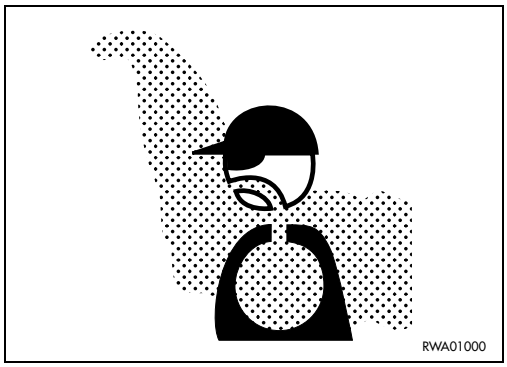

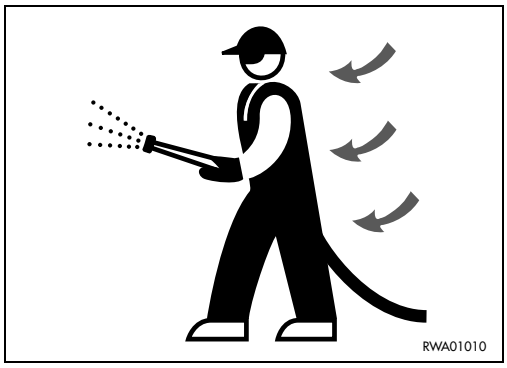

- Asbestos powder can be hazardous to your health if it is inhaled.
- If you handle materials containing asbestos fibers, keep to the instructions given below:
  1 - **Do not use compressed air, but only aspirators** to clean the machine and make sure that the room in which you are working is properly ventilated.
  2 - Use low-pressure water to keep down the dust when cleaning.
  3 - If there is danger that there may be asbestos powder in the air, operate the machine with the wind to your back whenever possible.
  4 - Even if the cab provides suitable protection, use an approved and homologated respirator.
  5 - The powder gathered during the cleaning operations must be dampened and put in a sealed and marked container, so that it can be safely disposed of according to the regulations in force.

Downloaded from www.Manualslib.com manuals search engine

https://truckmanualshub.com/

2.2.10 PREVENTING DAMAGE CAUSED BY THE WORK EQUIPMENT

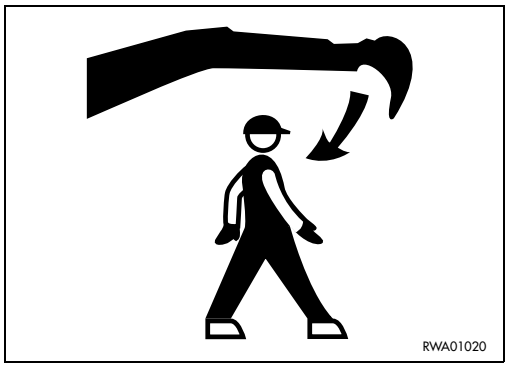

- Do not stand within or approach the operating radius of the work equipment, even when the operator is on board the machine and the engine is running.
- Do not stand or work under the arms or the articulations when the arms are lifted, if you are not sure that the safety locks have been duly engaged.
- Do not carry out any operation requiring the lifting of the arms, if you are not sure that the locks are correctly positioned and coupled to the arms.

2.2.11 FIRE EXTINGUISHERS AND FIRST AID KIT

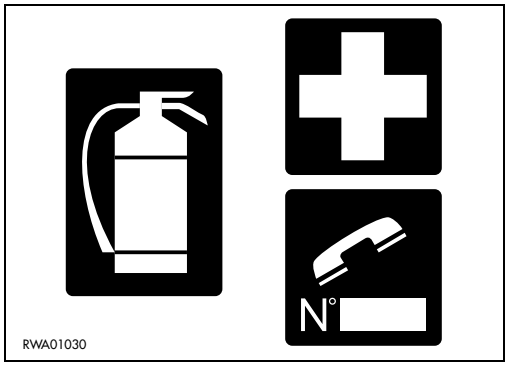

- Make sure that fire extinguishers have been provided and check their position.
- Periodically make sure that the fire extinguishers are loaded and that you know how to use them.
- Find out where the first aid kit has been located.
- Periodically make sure that the first aid kit contains the necessary disinfectants, bandages, medicins, etc.
- It is necessary to know what to do in case of fire.
- Make sure that you have the phone numbers of the persons or structures you may need to contact in case of an emergency at hand (either at the work site and where maintenance operations are performed).

2.2.12 PRECAUTIONS CONCERNING THE CAB STRUCTURE

- If the cab is inadvertently hit or the machine overturns during work, the cab may be damaged with consequent reduction of its stiffness and of the safety that must be guaranteed to the operator.
  Consult Komatsu Utility or your Komatsu Utility Dealer to have the cab structure and resistance checked in case of impact or damage.

2.2.13 PRECAUTIONS CONCERNING THE EQUIPMENT

- When installing and using optional equipment, carefully read the relevant instruction manual and keep to the indications given therein.
- Do not use optional or special equipment without the authorization of Komatsu Utility or the Komatsu Utility Dealer.
  The installation and use of unauthorized equipment may create safety problems and adversely affect the efficiency and life of the machine.
- Komatsu Utility cannot be held liable for any injury, accident, product failure resulting from the installation and use of unauthorized equipment.

Downloaded from www.Manualslib.com manuals search engine

https://truckmanualshub.com/

2.3 PRECAUTIONS TO BE TAKEN BEFORE STARTING THE ENGINE

2.3.1 SAFETY ON THE WORK SITE

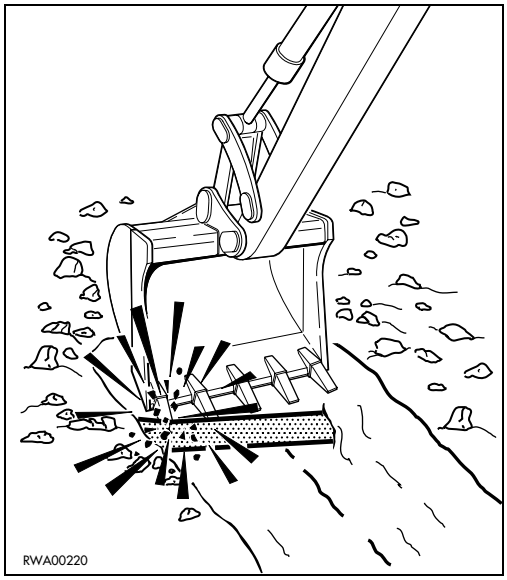

- Before starting the engine, thoroughly check the area for any unusual condition of the ground due to which work may be dangerous.
- Check the conditions of the ground at the work site and before starting the engine define the work plan and the best and safest operating procedure.
- Make the ground surface as level as possible before carrying out any operation.
- In case of work on the road, protect pedestrians and cars by designating a person for work site traffic duty and install fences around the work site.
- If water lines, gas lines, and telephone or high-voltage electrical lines are located under the work site, contact the relevant utility company in order to find out their exact positions or to make them ineffective until the end of the operations. Be careful not to sever or damage any of these lines.
- Check the depth and flow of water before operating in water or on river banks.

2.3.2 FIRE PREVENTION

- Completely remove all wood chips, rubbish, paper and other flammable materials that may have accumulated inside the engine compartment, since they can cause fires.
- Check the fuel and hydraulic system pipes for leaks and if necessary repair them. Wipe up any excess oil, fuel or other flammable fluids.
- Make sure that fire extinguishers are available in the work area.

2.3.3 PRECAUTIONS TO BE TAKEN FOR THE OPERATOR'S CAB

- Do not leave objects or tools lying around in the operator's cab. They may hinder the operation of the controls and cause serious accidents.
- Keep the cab floor and the controls (pedals and levers) clean, by removing any trace of oil and grease and, as far as the floor is concerned, remove any excess dirt (earth, stones, etc.).
- Check the safety belt and change it if it is broken or damaged.
  Replace any component only with homologated parts available at Komatsu Utility or its Dealers.

Downloaded from www.Manualslib.com manuals search engine

https://truckmanualshub.com/

2.3.4 ROOM VENTILATION

- Before starting the machine in confined or poorly ventilated places, provide for proper ventilation or connect the engine exhaust pipe to a suction duct. The engine exhaust gases can be deadly.

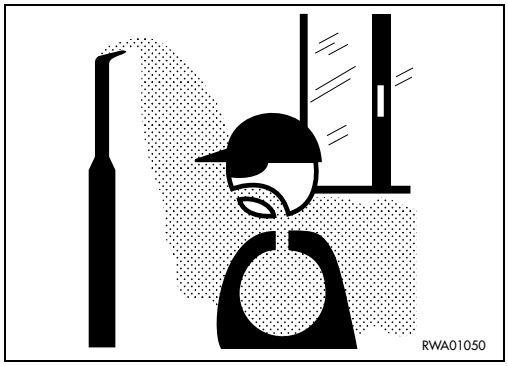

2.3.5 PRECAUTIONS TO BE TAKEN FOR THE LIGHTS

- Remove any trace of dirt from the lights, in such a way as to ensure perfect visibility on the work area.
- Make sure that the working lights are installed as prescribed. Make also sure that they come on correctly.

2.3.6 CLEANING THE WINDOWS - CHECKING THE WINDSHIELD WIPER BLADES

- Remove any trace of dirt from the cab windows, in order to ensure perfect visibility on the work area.
- Check the conditions of the windshield wiper blades; the scraping wire must be smooth, with no indentations and attached to the rubber back of the blade.
  In case of doubts on the efficiency of the scraping wire, change the blades.

Downloaded from www.Manualslib.com manuals search engine

https://truckmanualshub.com/

2.4 PRECAUTIONS TO BE TAKEN WHEN WORKING

2.4.1 STARTING THE ENGINE

- Before getting on the machine, walk around it and check for people and objects that might be in the way.
- Do not start the engine if warning plates have been attached to the control levers.
- When starting the engine, sound the horn as an alert signal.
- Start the engine only while seated with fastened safety belt.
- Do not allow anyone to get on the machine.

2.4.2 CHECK THE DIRECTION BEFORE STARTING THE MACHINE

- Before operating the machine travel levers, check the position of the blade.
  If the blade is positioned on the back of the machine, the operation of the travel levers is inverted.
  In this condition, take care not to mistake the travel movements during the use of the machine.
  (See “3.6.5 HOW TO MOVE THE MACHINE”).

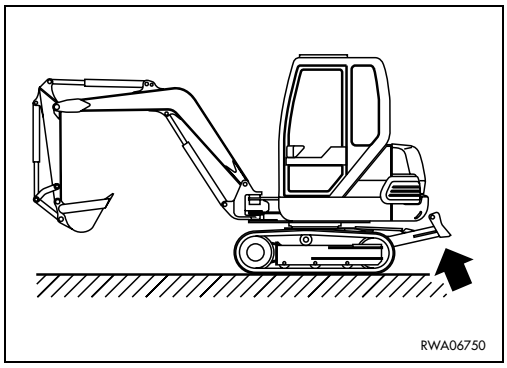

2.4.3 CHECKS FOR TRAVELLING IN REVERSE

- When operating in areas that may be hazardous or have poor visibility, designate a person to direct the movements of the machine and traffic on the work site.
- Make sure that no unauthorized person is within the machine operating radius or in its travel direction.
  If necessary, put up appropriate fences.
- Before moving the machine, sound the horn in order to warn the persons near the work area.
- There are blind spots behind the machine, which cannot be seen and where someone may be standing: therefore, it is necessary to make sure that there is no one behind the machine before travelling in reverse.

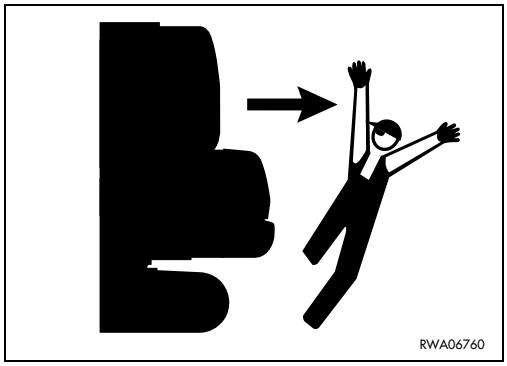

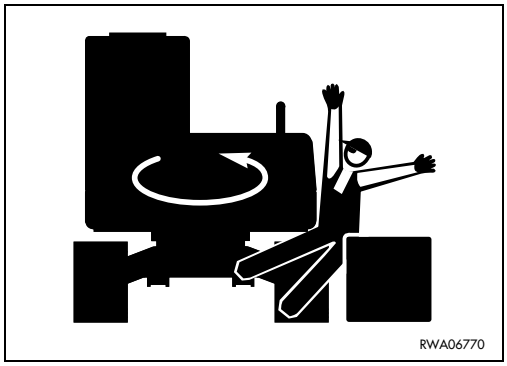

Downloaded from www.Manualslib.com manuals search engine

https://truckmanualshub.com/

2.4.4 MOVING THE MACHINE

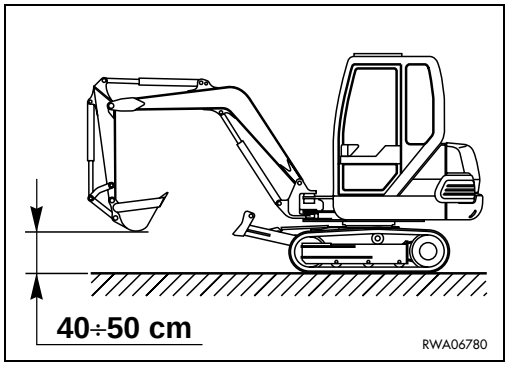

- When moving the machine, position the bucket at about 40÷50 cm from the ground; this position makes it possible to evaluate the space required for the movements more precisely and at the same time ensures the stability of the machine.
- Make sure that the driver's seat is directed towards the blade. Otherwise, pay attention to the steering and advance manoeuvres, since they are inverted.
- If the equipment control levers must be used during travel, avoid moving them abruptly; sudden manoeuvres change the attitude of the machine and make driving difficult.
- When travelling on rough ground, keep the speed low and avoid sudden movements of the bucket arm.

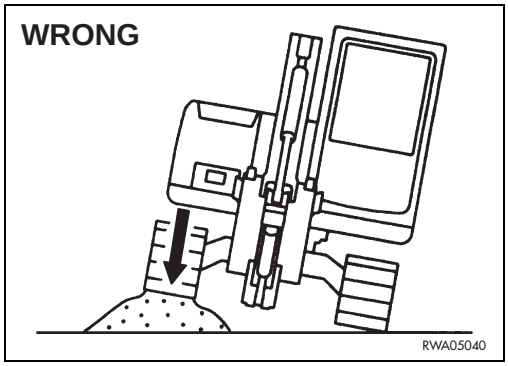

- If possible, avoid moving on obstacles.
  If the machine has to travel over an obstacle, keep the equipment as close to the ground as possible and travel at low speed.
  Never move on obstacles that may incline the machine considerably (over 10°).
- If one of the two rubber tracks moves on an obstacle or gets into a hole in the ground, the machine may overturn.
  In these cases, reduce the speed to minimum and be very careful to the balance of the machine.

Downloaded from www.Manualslib.com manuals search engine

https://truckmanualshub.com/

2.4.5 MOVING ON SLOPES

- Operations on slopes and on river or lake banks with damp ground may result in the tipping over or slipping of the machine.
- On hills, banks or slopes, keep the bucket very close to the ground (20÷30 cm from the ground) and in case of emergency quickly lower it to the ground to help the machine stop.
- Do not change direction and avoid travelling obliquely when working on slopes. It is advisable to go down or up to a flat place to perform these operations.
- Do not travel on wet grass or thick layers of leaves: if the machine moves obliquely in these conditions, it may slip.
- Do not move on slopes with inclination exceeding 30°, since the machine may overturn.
- When the fuel level indicator reaches the red reserve area during work on a slope, immediately provide for refuelling; due to the inclination of the machine, the engine may suck in air and suddenly stop, which represents a grave risk for the safety of the operator and of the persons before the machine.
- If the engine should stop all of a sudden, immediately lower the bucket to the ground.

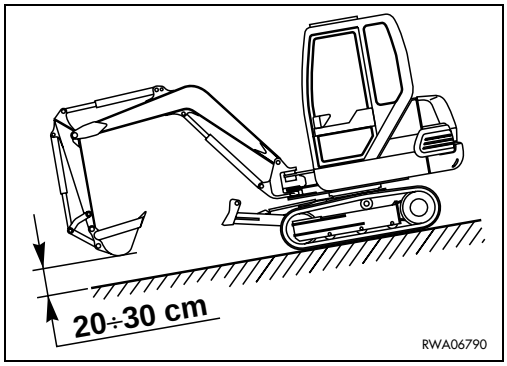

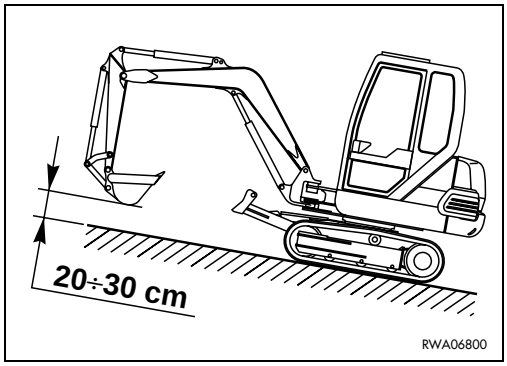

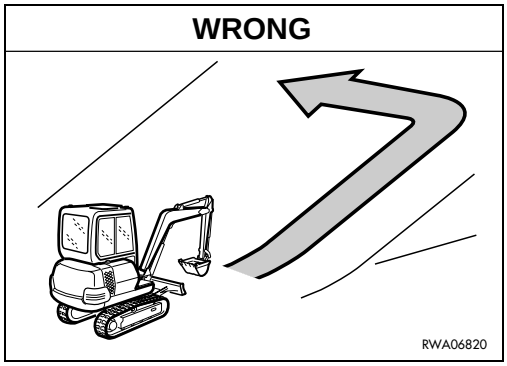

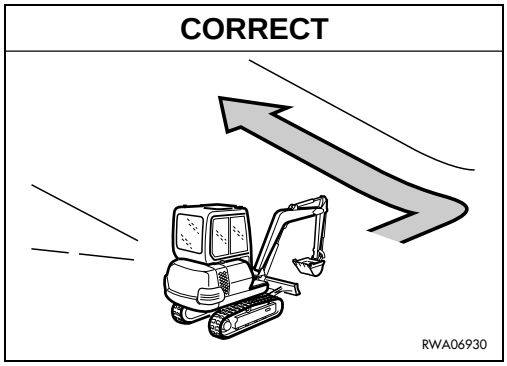

Downloaded from www.Manualslib.com manuals search engine

https://truckmanualshub.com/

2.4.6 WORKING ON SLOPES

- When working on slopes, if possible avoid rotating the upper structure, since the machine may lose balance and overturn.
  It is particularly dangerous to swing on slopes when the bucket is full.
  If these operations must last longer, accumulate soil in such a way as to create a horizontal platform on which the machine can be positioned.

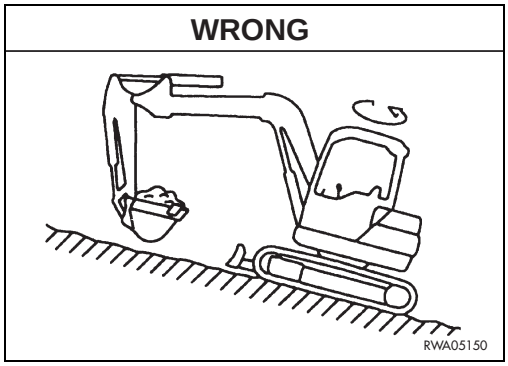

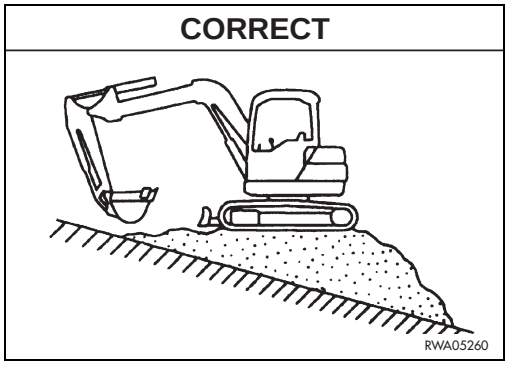

2.4.7 UNAUTHORIZED OPERATIONS

- Do not dig under overhangs.
  The protruding surface, in fact, may collapse on the machine.
- Do not dig too deeply under the front part of the machine, since the ground may collapse and cause the machine to fall down.

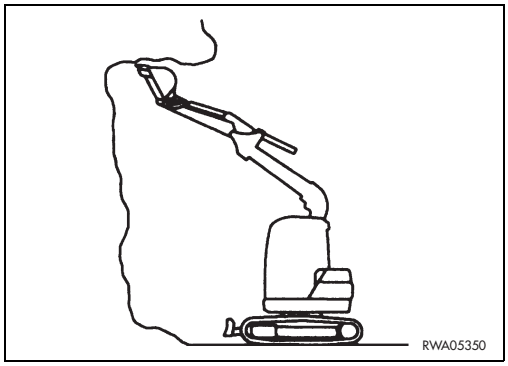

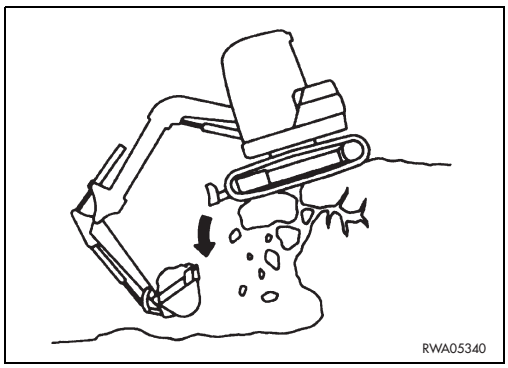

Downloaded from www.Manualslib.com manuals search engine

https://truckmanualshub.com/

2.4.8 PREVENTING ELECTROCUTION

- Digging operations near overhead electric lines are extremely dangerous and they may also cause death due to electrocution; for this reason, when working near overhead electrical lines always respect the minimum safety distances prescribed by the competent authorities and by the accident-prevention rules in force.
- As far as underground long-distance lines are concerned, the minimum distance depends on the covering of the ducts in which the cables are laid.
- The basic safety precautions to be taken to prevent this risk are the following:

  1 - Wear shoes with thick rubber or leather soles.

  2 - Request the aid of another person who can warn you if the machine gets too close to the electric line.

  3 - Operate at low speed.

  4 - Learn what is to be done first in case of electrocution.

  5 - Keep the phone number of the electricity company and of the nearest first aid station at hand.
- If the work equipment gets accidentally entangled in the cables, the operator must not leave the cab until the electricity company has insulated the line.
- When carrying out this kind of operations, warn everyone standing in the work area to keep at the minimum distance prescribed from the machine and the work equipment.
- Ask the electricity company what are the voltage of the cables and the minimum safety distance in advance.

DANGER

- **The minimum distances from overhead lines can vary in the different countries, according to the climate and to the humidity percentage in the air.**
  Indicatively, the distances indicated in the table should be respected.

Cable voltage	Min. safety distance
1.0 kV (distribution line)	5 m
6.6 kV (2÷3 insulators)	5.2 m
33 kV (min. 3 insulators)	5.5 m
66 kV (min. 6 insulators)	6 m
154 kV (min. 10 insulators)	8 m
275 kV (min. 19 insulators)	10 m

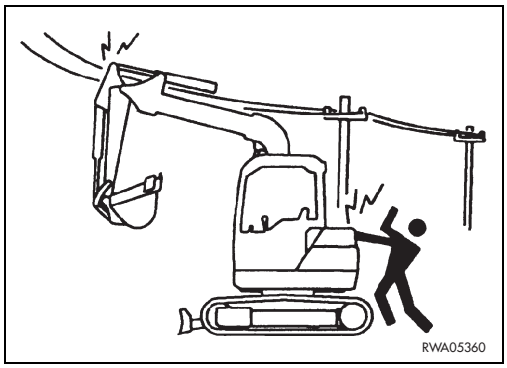

Downloaded from www.Manualslib.com manuals search engine

https://truckmanualshub.com/

2.4.9 VISIBILITY

- Switch on the working lights as soon as visibility decreases.
- If visibility decreases due to mist, smoke or heavy rain, stop the machine in a safe position and wait for the weather to improve until visibility becomes acceptable.

2.4.10 WORKING ON ICY OR SNOW-COVERED SURFACES

- If the ground is icy or covered with snow, even a slight slope may cause the machine to slip sidewards, therefore it is advisable to move at low speed and to avoid abrupt starts, stops or turns.
- When it has snowed heavily, the road shoulders and any obstacle are buried in the snow and are not visible, therefore proceed with care when clearing the snow.

2.4.11 PREVENTING DAMAGE CAUSED BY THE WORK EQUIPMENT

- When working in tunnels, galleries, under electric cables or other ducts (air, telephone lines) and wherever the height is limited, proceed with the greatest care to prevent the bucket or the arms from causing any damage.

2.4.12 WORKING ON LOOSE GROUND

- Avoid operating the machine too close to the edge of cliffs, overhangs and deep ditches.
  These areas may collapse, making the machine fall down or tip over and this could result in serious injuries or death.
  Remember that after heavy rain or earthquakes these dangerous conditions usually get worse.
- The earth laid near ditches is loose and can easily collapse due to the weight or vibrations of the machine.
  Be extremely careful: always fasten the safety belt and close the cab door, if provided.
- In case of work in areas where stones or other material may fall on the machine, install the FOPS protection device.

Downloaded from www.Manualslib.com manuals search engine

https://truckmanualshub.com/

2.4.13 PARKING THE MACHINE

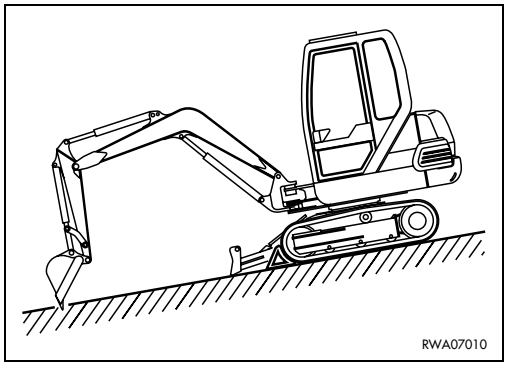

- Park the machine on firm and level ground. If this is not possible and it is necessary to park on a slope, position the machine with the bucket directed downwards and carry out the following operations:
  1 - Rotate the bucket to the dumping position and lower the arms until thrusting the teeth into the ground.
  2 - Stop the engine.
  3 - Put wedges or safety blocks under the tracks.
- Always rest the work equipment on the ground; if it is necessary to park with raised arms, make sure that the safety locks are engaged.

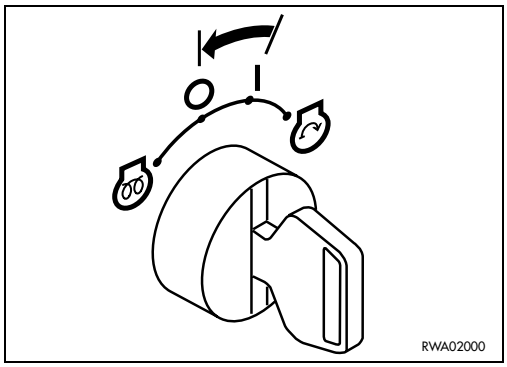

- Lock the equipment control by shifting the safety device lever to the lock position.
- When leaving the machine, remove the ignition key.
- If it is necessary to park on public roads, provide for signalling the presence of the machine according to the local regulations in force (signalling fires, fences, road works ahead, alternated direction and direction signs, etc.).

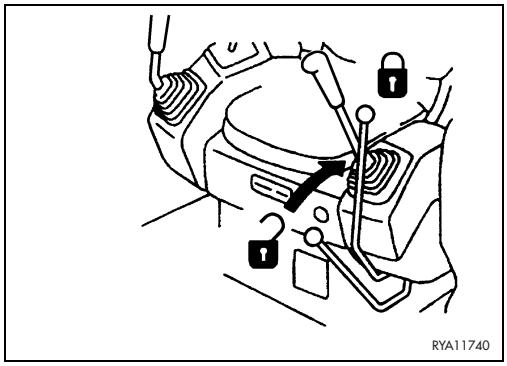

Downloaded from www.Manualslib.com manuals search engine

https://truckmanualshub.com/

2.5 TRANSPORTING THE MACHINE ON MOTOR VEHICLES

2.5.1 LOADING AND UNLOADING

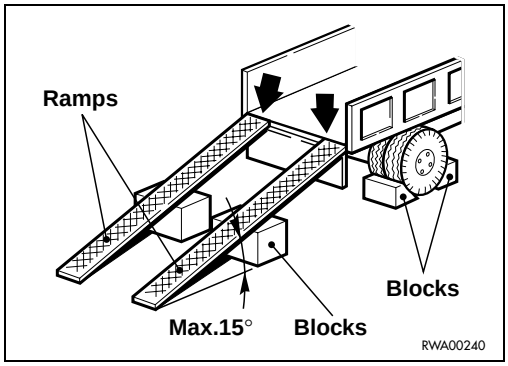

- Loading and unloading the machine on/from a motor vehicle always involves potential hazards. Proceed with extreme care.
- Perform loading and unloading on firm, level ground. Maintain a safety distance from the edges of ditches or from road sides.
- If the vehicles used have not been appositely equipped, put support blocks under the ramps, in order to avoid any bending.
- Always lock the wheels of the transporting vehicle with wedges.
- Always use ramps that are sufficiently wide and can support the weight of the machine. The longitudinal axes of the ramps must be parallel to each other and perpendicular to the loading side board and their distance must be suitable for the tread of the machine.
- Make sure that the ramps are securely positioned and fastened to the loading board and that they have the same length.
- Position the ramps with a maximum inclination of 15°.
- Make sure that the ramp surface is clean and there is no trace of grease, oil, soil and ice; remove dirt from the tracks before starting to load the machine on the vehicle.
- The machine must be loaded on the vehicle with the bucket directed forwards, that is, in the direction of advancement of the vehicle.
- Do not correct the trajectory of the machine on the ramps. If necessary, get down the ramps and start the operation again.
- After loading the machine, block the tracks with wedges and secure it with tie-downs or chains that prevent even any sideward shift (see “3.9 TRANSPORTING THE MACHINE ON MOTOR VEHICLES”).

2.5.2 TRANSPORT

- Define the route to be followed, taking in consideration the width, height and weight of the transport means and of the machine.
  Make sure that the dimensions of the machine are compatible with the road and any gallery, subway, bridge, electric and telephone lines, etc.
- Keep to the regulations in force regarding the permissible width, height, weight of the machine and the transport speed.

Downloaded from www.Manualslib.com manuals search engine

https://truckmanualshub.com/

2.6 BATTERY

2.6.1 PREVENTING RISKS THAT MAY BE DUE TO THE BATTERY

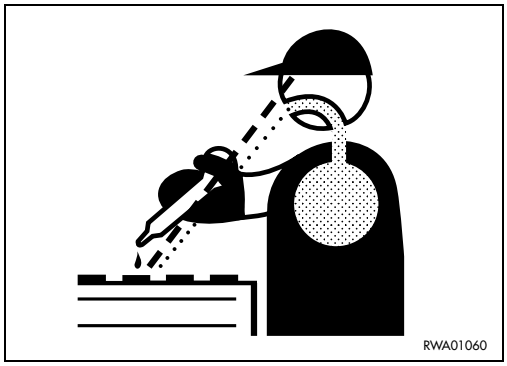

- Electrolytic batteries contain sulphuric acid that can quickly burn the skin and corrode clothes making holes in the fabric. If you spill acid on yourself, immediately rinse the involved area with plenty of water.
- Battery acid may cause blindness if splashed into the eyes. If acid gets accidentally into your eyes, flush them immediately with plenty of water and consult a doctor without delay.
- If you accidentally swallow some acid, drink a large quantity of water or milk, beaten egg white or vegetable oil and in any case antiacid substances like magnesia, bicarbonate, etc. call a doctor or a poisoning prevention center immediately.
- When handling batteries, always wear safety goggles.
- Batteries generate hydrogen. Hydrogen is highly explosive and can be easily ignited with small sparks or naked flames.
- Before working with batteries, stop the engine and remove the ignition key.
- Avoid short-circuiting the battery terminals through accidental contact with metal objects or tools or through the inversion of the terminals.
- Tighten the battery terminals securely. Loose terminals may generate sparks and even cause the explosion of the battery.

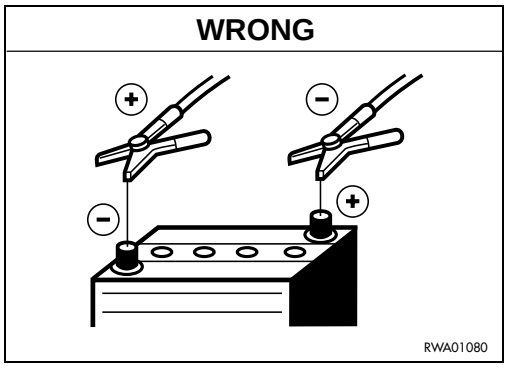

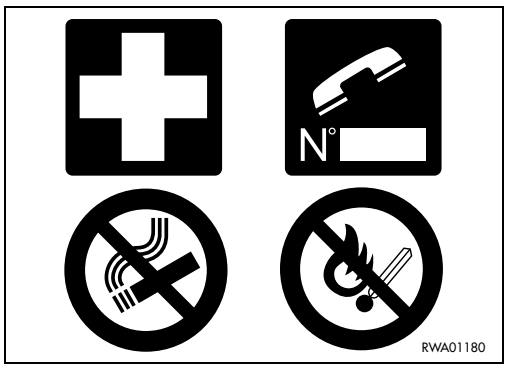

2.6.2 STARTING WITH BOOSTER CABLES

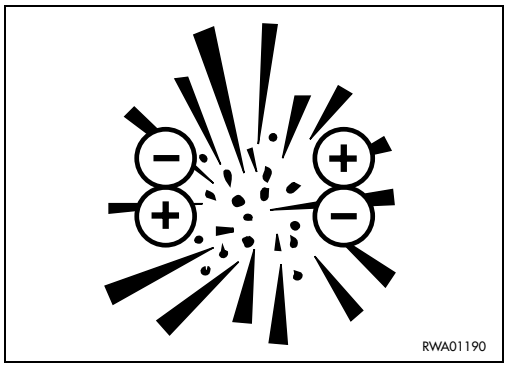

- When starting the machine with booster cables, always wear safety goggles.
- When starting the engine by means of another machine, avoid any contact between the two machines.
- Be sure to connect the positive cable (+) first and then the negative or earth cable (–) when connecting the booster cables. Disconnect first the negative or earth (–) cable and then the positive cable (+) after the start.
- Connect the batteries in parallel: positive to positive and negative to negative.
- When connecting the earth cable to the frame of the machine to be started, operate as far as possible from the battery. (See “3.15.4 IF THE BATTERY IS DOWN”).

Downloaded from www.Manualslib.com manuals search engine

https://truckmanualshub.com/

2.7 PRECAUTIONS FOR THE REMOVAL

- The draw hook must be used only for the first aid and not for towing the machine.
- Before moving the machine, make sure that all the controls are in neutral.
- Incorrect manoeuvres may result in serious injuries or even death.
- To move the machine, use properly dimensioned steel cables; do not use worn cables or cables with broken strands (A), twisted cables (B), deformed cables (C).
- During the removal, no one can be allowed to get near the machines or the cable.
- Do not get astride the cable.
- Remove the machine only as much as necessary to permit the required repairs.
- Put wooden blocks between the towing cable and the machine body, in order to avoid wear or damage.
- Do not remove the machine in any way other than that indicated at point “3.15.2 HOW TO REMOVE THE MACHINE”).

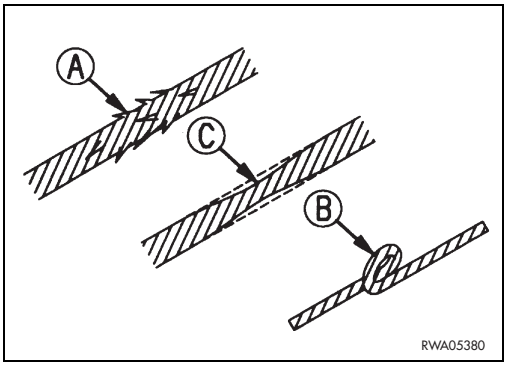

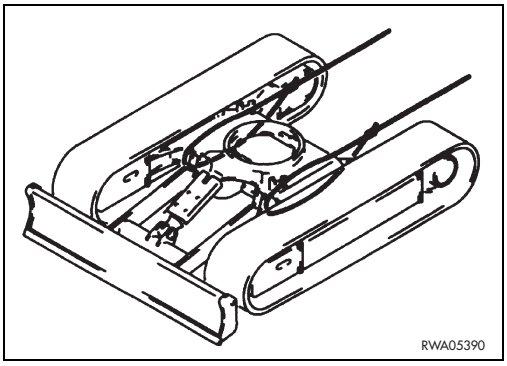

CAUTION

- **The maximum applicable force for the removal is the following:**
  F=2675 kg (for PC20R only)
  F=3065 kg (for PC27R only).
- **Use cables having the same length and draw continuosly and constantly, without jerks.**
- **Arrange and couple the machine to be removed by positioning it on the same axis as the towing vehicle; the drawing force must be parallel to the axis of movement of the machine.**

Downloaded from www.Manualslib.com manuals search engine

https://truckmanualshub.com/

2.8 PRECAUTIONS FOR MAINTENANCE

2.8.1 WARNING PLATES

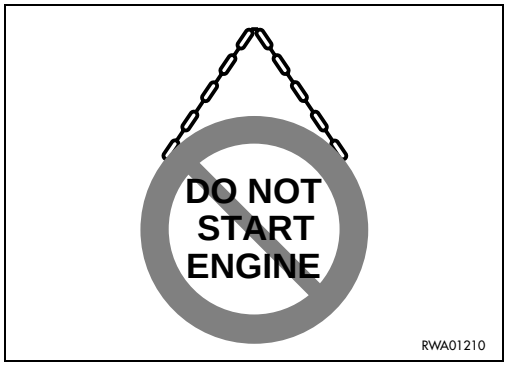

- Before starting any maintenance operation, position the machine on a firm and level surface, rest the equipment onto the ground, engage the safety locks of either the equipment and the controls and stop the engine.
- If another person starts the engine and operates the control levers while the operator is providing for service, this may result in serious injuries or even death.
- To avoid these risks, always attach warning plates to the control levers and to the ignition key before performing any maintenance operation; if necessary, attach additional warning tags also around the machine and in particular on the cab door handles.

2.8.2 TOOLS

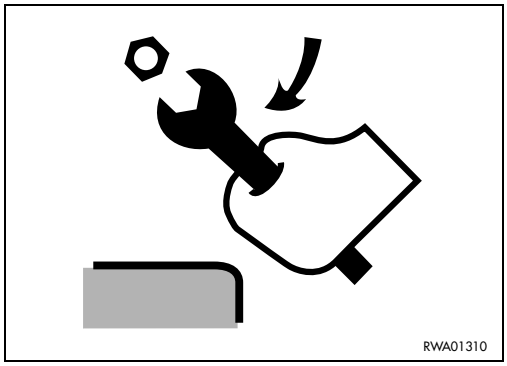

- Use only the tools provided with the machine and high-quality tools suitable for the tasks to be performed.
- Do not use worn, damaged, low-quality tools or tools that are not suitable for the tasks to be performed, in order to avoid any personal injury.
- After use, always clean the tools carefully and put them in the appropriate compartment (1) positioned inside the seat support.

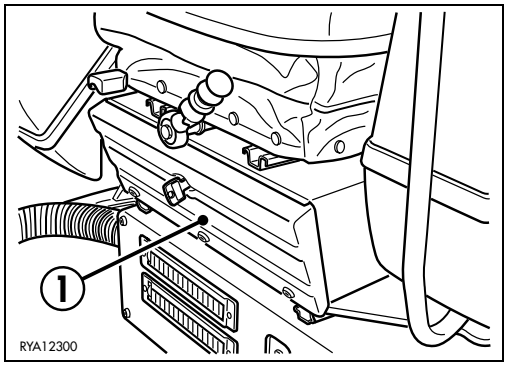

2.8.3 PERSONNEL

- Only authorized and duly trained personnel can service and repair the machine; additional precautions must be taken when grinding, welding and using a sledge hammer or heavy hammers.
- When assemblying the equipment or cylinder connection pins, use wooden, plastic or in any case not excessively hard tools to check the centering of the holes.
  Do not use your fingers, since you run the risk of cutting them.

Downloaded from www.Manualslib.com manuals search engine

https://truckmanualshub.com/

2.8.4 EQUIPMENT

- The normal or special equipment that must be installed on the machine or that have been removed must be stored in safe places, preventing them from falling down. If they fall on someone, they can cause serious bodily harm.
- When assemblying or removing any equipment, make sure that the ropes and the lifting hook are in good conditions and properly dimensioned for the load to be lifted.

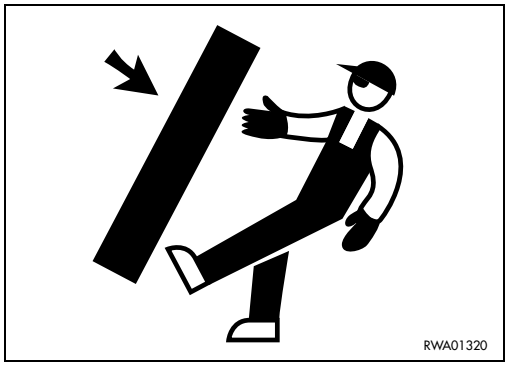

2.8.5 WORKING UNDER THE MACHINE

- Always lower the work equipment to the ground or in any case to its lowest position before performing service or repairs under the machine.
- Always lock the machine tracks securely.
- Do not work under the machine, if this is not sufficiently supported.

2.8.6 CLEANING THE MACHINE

- Spilled oil or grease, scattered tools or broken pieces are dangerous, because they may cause someone to slip or trip. Always keep the machine and the work site clean and tidy.
- To clean the machine, use a pressurized jet of warm water or steam and the appropriate detergents available on the market. Do not use gas oil, oil or solvents, since the former leave an oily coat that favours the sticking of dust, while the latter (even if weak) damage the painted surfaces and therefore facilitate rusting.
- While cleaning the machine, keep the pressurized jet at a minimum distance of approx. 60 cm in order not to damage the warning plates and the pictograms.
  If the plates are damaged, request Komatsu Utility or your Komatsu Utility Dealer to send you spare plates and change them.
- Water into the electrical system provokes the oxidation of the contacts and may hinder the start of the machine or even make it start suddenly and abruptly. For this reason, never use water or steam jets to clean sensors, connectors or the inside of the operator's cab.

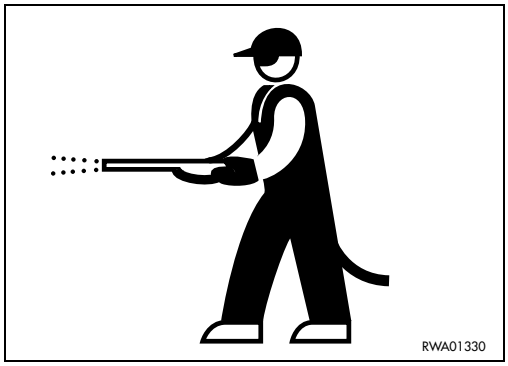

Downloaded from www.Manualslib.com manuals search engine

https://truckmanualshub.com/

2.8.7 USE OF THE ENGINE DURING MAINTENANCE OPERATIONS

- During maintenance operations, let the engine run only when indispensable. If it is necessary to have the engine running (for example, to wash the cooling circuit or to check the functionality of the alternator), an operator should constantly remain in the cab, in order to be able to stop the engine whenever necessary.
- During maintenance operations with running engine, never move the control locking devices from the “lock” position or change the position of the travel levers.
  Service personnel must not move any control lever.
- When carrying out maintenance operations, do not touch the moving parts of the machine and avoid wearing large and loose clothes.

2.8.8 PERIODICAL CHANGE OF THE PARTS THAT ARE CRITICAL FOR SAFETY

- Periodically change the following parts, which are important to prevent fires.
  Fuel supply system: fuel delivery and return pipes.
  Hydraulic system: main delivery pipes of the hydraulic pump.
- Even if they seem to be in good conditions, these components must be periodically changed with new ones. In fact, these components tend to deteriorate over time.
- If one of these parts is defective, change or repair it even if the change interval has not elapsed yet. (See “4.6 PERIODICAL CHANGE OF THE COMPONENTS CONNECTED WITH SAFETY).

2.8.9 STOP THE ENGINE BEFORE CARRYING OUT ANY MAINTENANCE OPERATION OR INSPECTION

- Stop the machine only on firm and level ground and stop the engine before carrying out any maintenance operation or inspection.
- If the engine must turn during a maintenance operation, shift the safety device lever to the LOCK position and carry out the maintenance operation with the help of another person; one operator must remain on the machine and the words and signs to be used must be agreed upon in advance.
- The person who carries out the maintenance operation must be very careful not to touch any moving part of the engine.

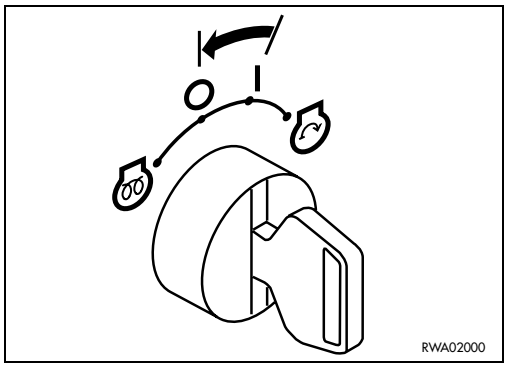

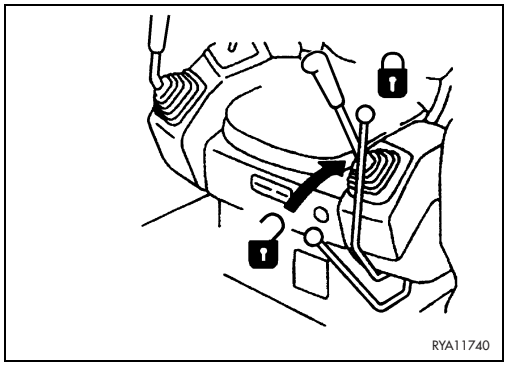

Downloaded from www.Manualslib.com manuals search engine

https://truckmanualshub.com/

2.8.10 RULES TO BE FOLLOWED DURING FUEL OR OIL TOPPING UP

- Keep away from naked flames while refuelling or topping up oil.
- Spilled fuel or oil make the ground slippery and may cause accidents; clean any dirty area immediately and carefully.
- Always tighten the fuel tank and the hydraulic circuit oil safety caps securely.
- Do not use fuel to clean any part of the machine that may be dirty with oil or dust.
- Always top up the fuel and oil tanks in properly ventilated place and avoid smoking.
- When refuelling, hold the fuel gun firmly and keep it constantly in contact with the filler until you have finished, in order to avoid sparks due to static electricity.
- Do not fill the tank completely, in order to leave room for the fuel to expand.

2.8.11 CHECKING THE COOLANT LEVEL IN THE RADIATOR

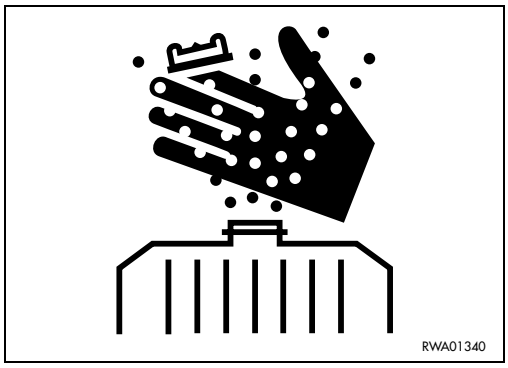

- Let the engine and the radiator cool down before checking the coolant level.
- If it is necessary to remove the cap with hot engine, wear suitable clothes and protections and loosen the cap slowly, in order to gradually release the pressure.

2.8.12 USING LAMPS

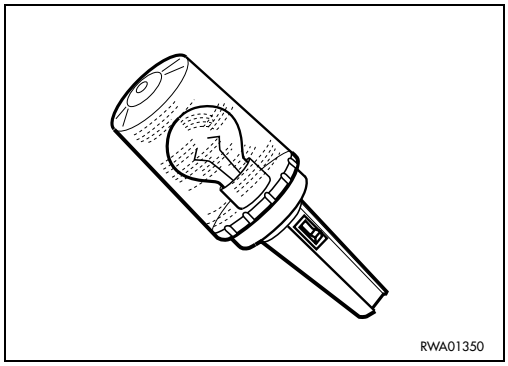

- When checking the fuel, oil, coolant or battery electrolyte levels, always use homologated explosion-proof lamps.
  If such lighting equipment is not used, there is danger of fire or explosion.

Downloaded from www.Manualslib.com manuals search engine

https://truckmanualshub.com/

2.8.13 PRECAUTIONS CONCERNING THE BATTERY AND THE ALTERNATOR

- When repairing the electrical system, disconnet the battery in order to stop the flow of current.

IMPORTANT

- **Disconnect first the negative earth cable (–) and then the positive cable (+).**
  At the end of the operation, reconnect first the positive cable (+) and then the negative cable (–).

- If electrical welding operations are to be carried out on the machine, it is necessary to disconnect the battery and also the alternator.

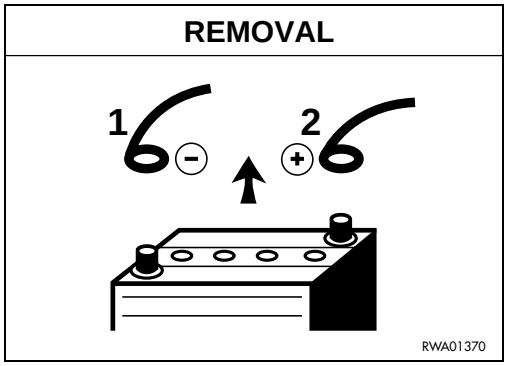

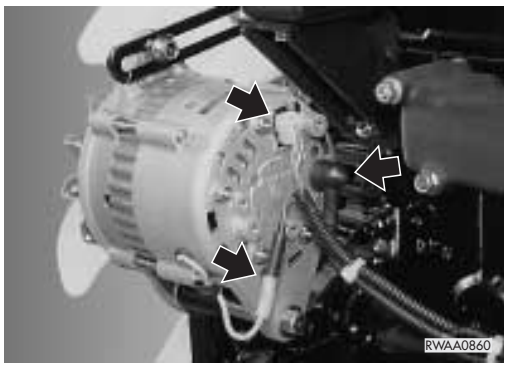

2.8.14 PRECAUTIONS CONCERNING THE STARTER

- Do not start the engine by tampering with the terminals of the starter, since the machine may move.
- Sudden or accidental movements of the machine may cause serious injuries or even death.

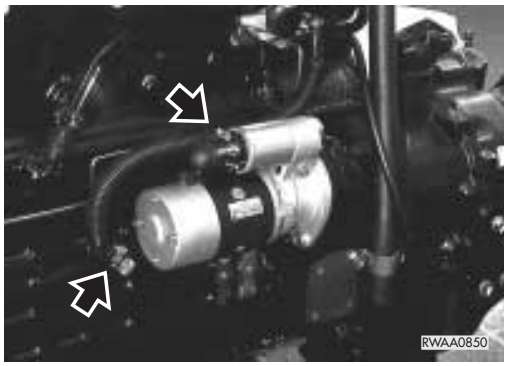

Downloaded from www.Manualslib.com manuals search engine

https://truckmanualshub.com/

2.8.15 HANDLING HIGH-PRESSURE PIPES

- Do not bend high-pressure pipes or rub them with abrasive or cutting objects.
  Do not use any bent or cracked pipes or hoses that were previously rejected because of leaks or fastening defects, since they may burst during use.
- Always repair or replace any loose or faulty fuel or oil pipe. Any leakage of fuel or oil may cause fires.

2.8.16 PRECAUTIONS TO BE TAKEN WHEN HANDLING HIGH-PRESSURE OIL

- Do not forget that the work equipment circuits are always under pressure; for this reason, when it is necessary to add or drain hydraulic oil or to perform maintenance operations or inspections on the hydraulic circuit, it is advisable to lower the equipment to the ground and completely release the pressures and the residual pressure present in the tank.
  Small leakages from pipes under pressure and the resulting jets are extremely dangerous, since they can perforate the skin and penetrate in the blood circulation or injure the eyes.
  For this reason, always wear goggles and thick gloves during the inspections and use a piece of cardboard or a sheet of plywood to check for oil leakages.
  If you are hit by a jet of high-pressure oil or are injured, even if slightly, immediately consult a doctor.

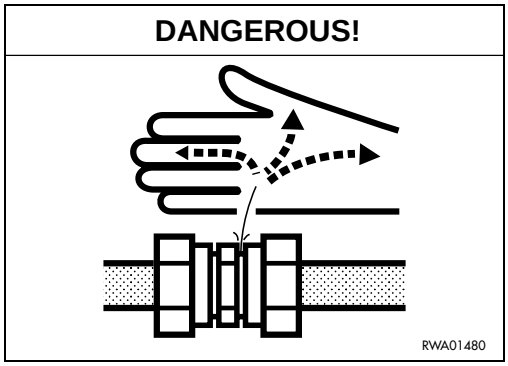

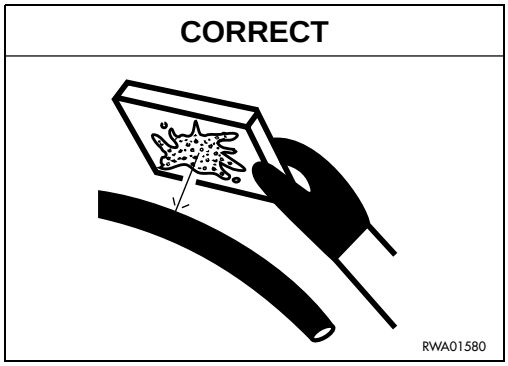

2.8.17 PRECAUTIONS FOR MAINTENANCE OPERATIONS AT HIGH TEMPERATURES AND HIGH PRESSURE

- When the machine is stopped at the end of operations, the engine coolant, the oil and all the components are hot and the hydralic circuits are under pressure.
  In these conditions, if the coolant, the hydraulic oil and the engine oil are to be drained in order to change them or the filters, there are serious risks of damage and burns.
  Wait for the temperature to lower within the normal operating range (40÷45) before carrying out the maintenance operations in accordance with the procedures indicated in the relevant sections of this manual).

Downloaded from www.Manualslib.com manuals search engine

https://truckmanualshub.com/

2.8.18 COOLING FAN AND BELT

- Be careful to the revolving parts and do not allow anyone to get too close to these parts, since clothes or parts of the body may get caught into them.
- If hands, clothes, or tools touch the fan blades or the belt, they may be cut, torn or seriously damaged; for this reason, avoid touching the revolving parts.

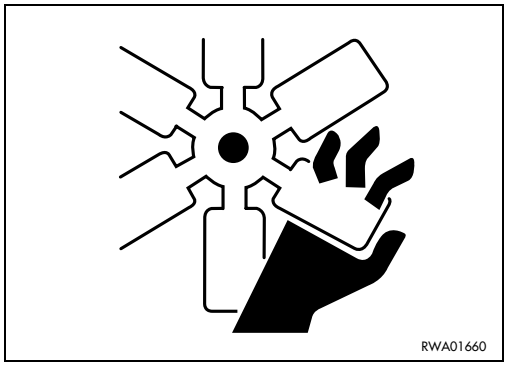

2.8.19 WASTE MATERIALS

- Do not dispose of used oil in the sewer system, rivers, etc.
- Always put used oil in containers. Never drain the oil directly onto the ground.
- Keep to the laws and regulations in force when disposing of harmful substances such as oil, fuel, solvents, used filters and batteries.

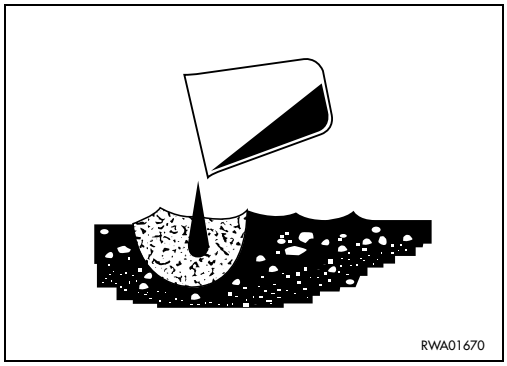

2.8.20 PRECAUTIONS FOR THE USE OF THE SYNTHETIC BIODEGRADABLE OIL TYPE HEES

- It is not possible to mix the synthetic biodegradable oil type HEES with ordinary hydraulic oils, since when the temperature increases insoluble compounds are generated, which are deposited on the filters and clog them (the maximum concentration of ordinary oil cannot exceed 1% of the total quantity of oil).
- The biodegradable oil can be used only in the hydraulic system; it cannot be used for the endothermic engine, the transmissions, the braking system, etc.
- Before introducing the synthetic biodegradable oil in the hydraulic system, empty the system completely, disconnecting the cylinders and all the parts that may contain ordinary oil, and replace the drain filter with a new one.
  Start the engine and let it idle without using the work equipment , wait until the oil reaches a temperature of at least 40°C, then start moving the equipment, so that all the parts of the system are filled with oil. Stop the engine and check the oil level (see “4.7.3.e CHECKING THE HYDRAULIC SYSTEM OIL LEVEL”).

Downloaded from www.Manualslib.com manuals search engine

https://truckmanualshub.com/

Downloaded from www.Manualslib.com manuals search engine

https://truckmanualshub.com/

THE MACHINE AND ITS OPERATIONS

Downloaded from www.Manualslib.com manuals search engine

https://truckmanualshub.com/

3.1 SAFETY LOCKS

DANGER

- **If it is necessary to stop the machine, lower the equipment to the ground and always engage the safety device by shifting the lever to the lock position. (See “3.3.5 pos. 8 MACHINE CONTROLS”).**
- **If the operator expects that he may need to stop the machine with raised arms, he is responsible for preparing and installing locks or safety devices that must ensure safety.**
- **During travel, position the upper structure so that it is directed towards the blade before engaging the antirotation lock.**
- **Non-compliance with these rules may result in serious damage.**

3.1.1 MACHINE LOCKS

- The machine is provided with an upper structure antirotation lock (1) that can be operated from the driving position; always lock the upper structure rotation before leaving and when transporting the machine.
- The other applications of the safety locks concern:
  a) The engagement of the lock (2) on the boom swing control pedal and of the lock (3) on the optional equipment control pedal.
  b) The lock position of the safety device (4) for the locking of the equipment, travel and boom swing controls.

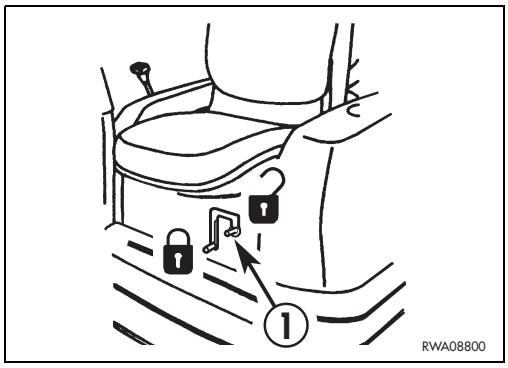

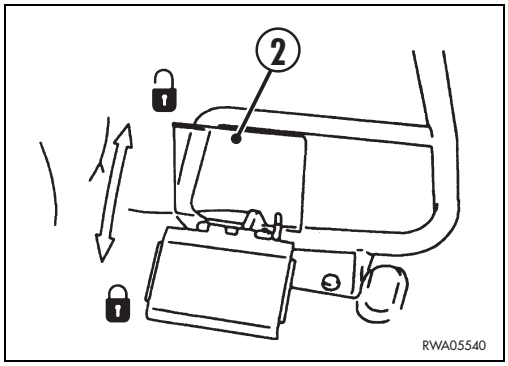

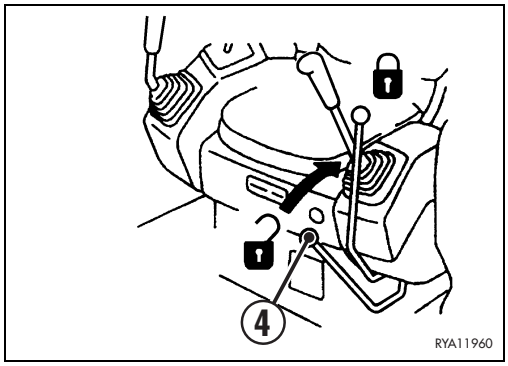

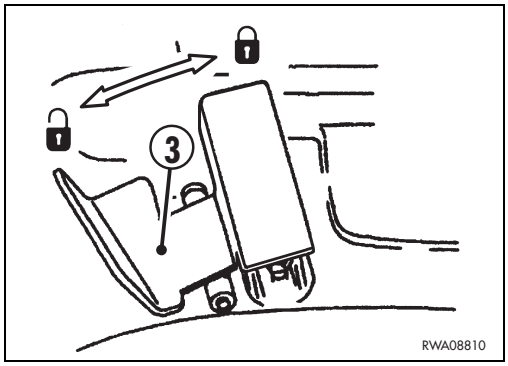

Downloaded from www.Manualslib.com manuals search engine

https://truckmanualshub.com/

3.2 GENERAL VIEWS

3.2.1 GENERAL VIEW OF THE MACHINE WITH CAB

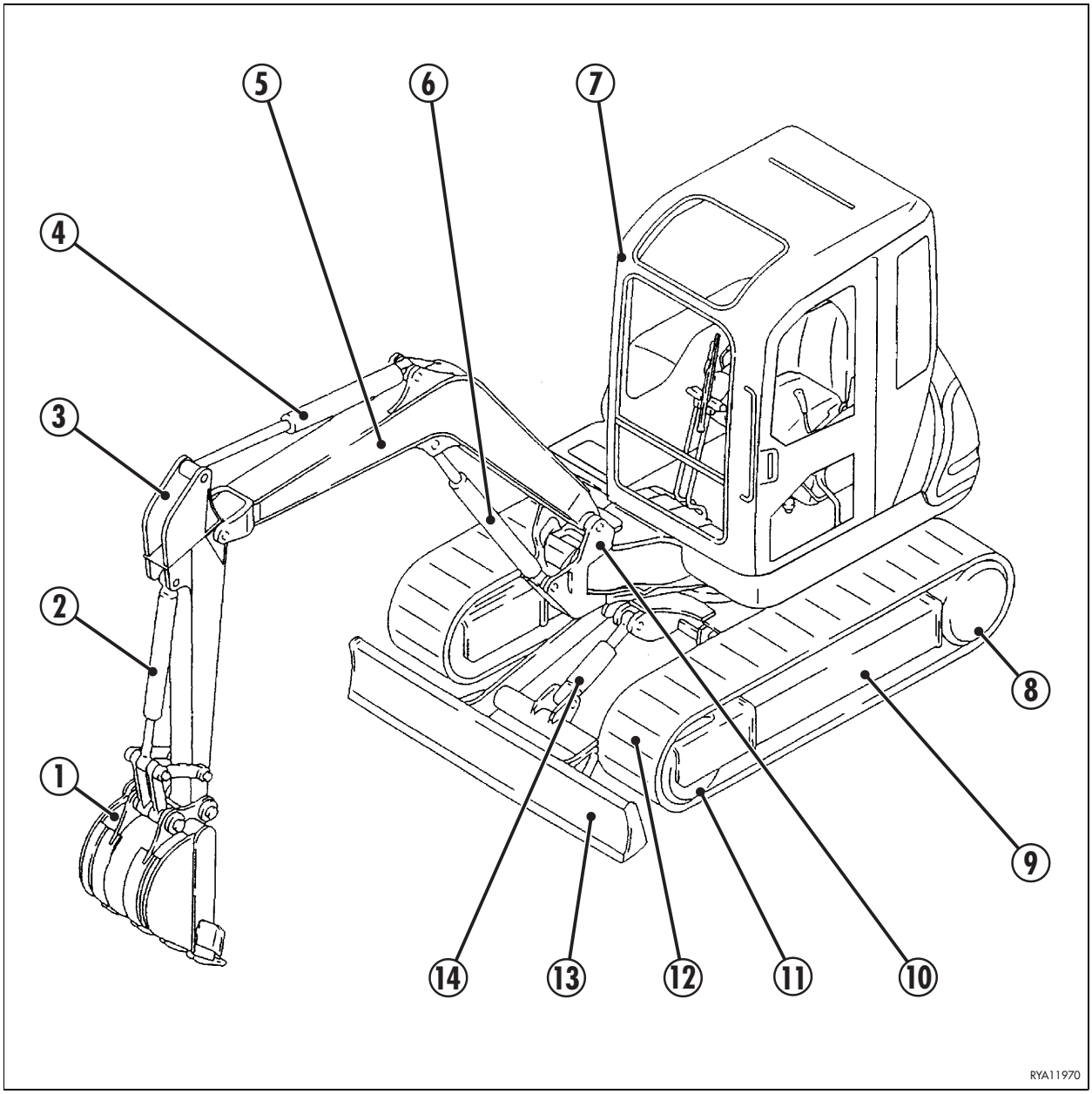

1 - Bucket
2 - Bucket cylinder
3 - Arm
4 - Arm cylinder
5 - Boom
6 - Lifting cylinder
7 - Cab
8 - Sprocket
9 - Undercarriage
10 - Revolving support
11 - Idler roller
12 - Track
13 - Blade
14 - Blade cylinder

Downloaded from www.Manualslib.com manuals search engine

https://truckmanualshub.com/

3.2.2 GENERAL VIEW OF THE MACHINE WITH CANOPY

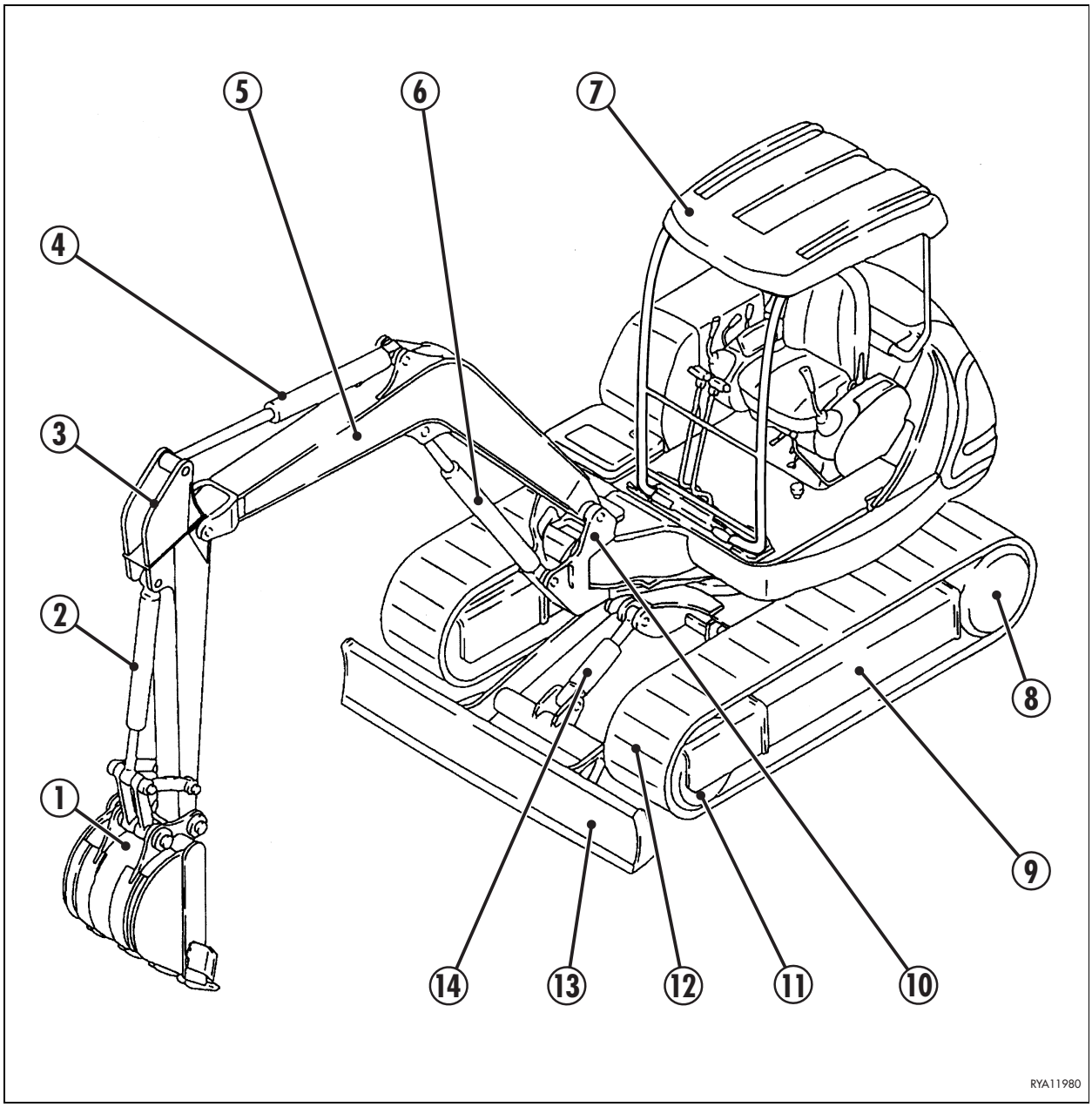

1 - Bucket
2 - Bucket cylinder
3 - Arm
4 - Arm cylinder
5 - Boom
6 - Lifting cylinder
7 - Canopy
8 - Sprocket
9 - Undercarriage
10 - Revolving support
11 - Idler roller
12 - Track
13 - Blade
14 - Blade cylinder

Downloaded from www.Manualslib.com manuals search engine

https://truckmanualshub.com/

3.2.3 GENERAL VIEW OF THE DRIVER'S SEAT

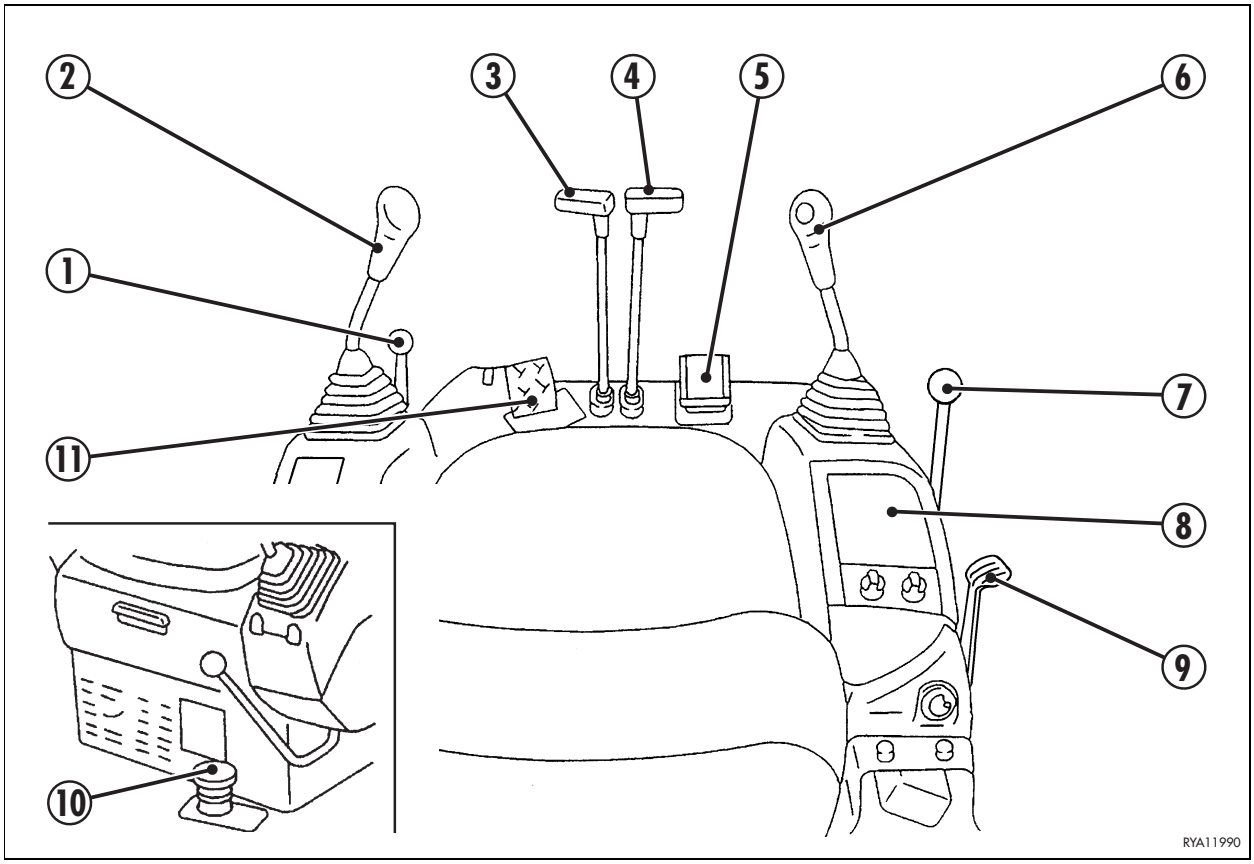

1 - Left safety lever
2 - Arm-upper structure rotation control
3 - Left track control lever
4 - Right track control lever
5 - Boom swing control pedal
6 - Bucket - boom lifting control
7 - Blade control
8 - Dashboard
9 - Accelerator control
10 - Speed increase control
11 - Optional equipment control pedal
12 - Rotation locking pin

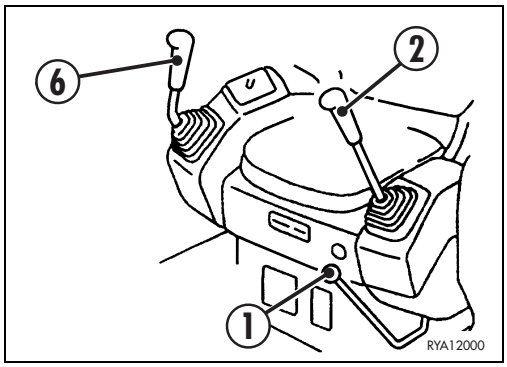

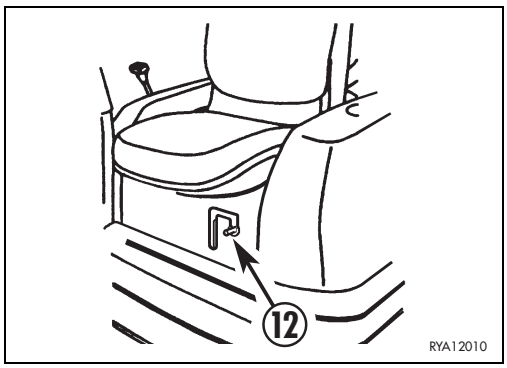

Downloaded from www.Manualslib.com manuals search engine

https://truckmanualshub.com/

3.3 INSTRUMENTS AND CONTROLS

3.3.1 INSTRUMENTS

1 - Hour meter
2 - Engine coolant temperature indicator
3 - Fuel level indicator

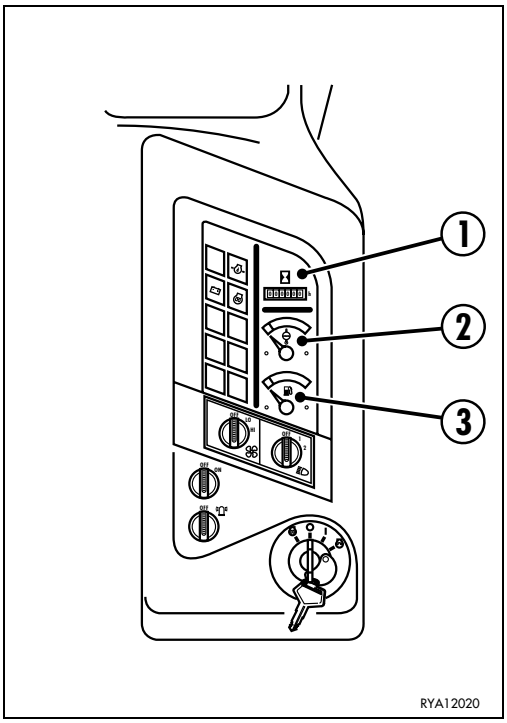

1 - HOUR METER

This instrument indicates the total number of operating hours of the engine. The count is continuous and the number is increased by 1 when the engine has run for one hour, independently of its speed.
The hour meter keeps functioning even if the machine is not travelling or working.
The reading is to be considered valid for the calculation of the maintenance intervals.

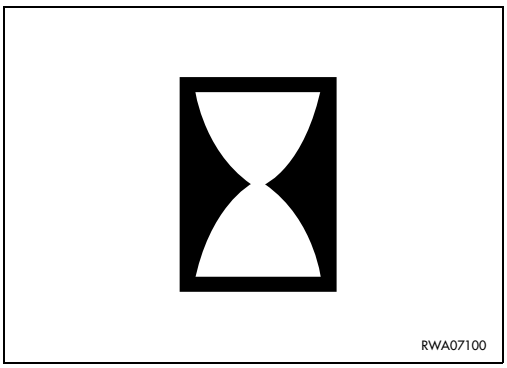

Downloaded from www.Manualslib.com manuals search engine

https://truckmanualshub.com/

2 - ENGINE COOLANT TEMPERATURE INDICATOR

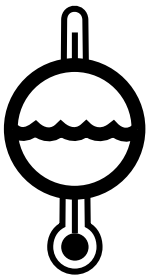

It indicates the temperature of the engine coolant, which must normally be 80-85°C.
After the start, it is necessary to let the engine warm up before beginning work.
If during operation the indicator exceeds the limit values and enters the overheating sector (red), let the engine idle until the indicator returns to the normal temperature sector (green).
When the indicator is in the overheating sector (red), the acoustic alarm sounds, too.
If this inconvenience occurs again, try to locate the fault (see 3.15.5.3 TROUBLE-SHOOTING - ENGINE).

3 - FUEL LEVEL INDICATORT

It indicates the fuel level in the tank; this information is available only when the ignition key is in position «**I**» (see pos. 9).

Downloaded from www.Manualslib.com manuals search engine

https://truckmanualshub.com/

3.3.2 WARNING LIGHTS

1 - Engine oil pressure warning light
2 - Generator warning light
3 - Pre-heating warning light

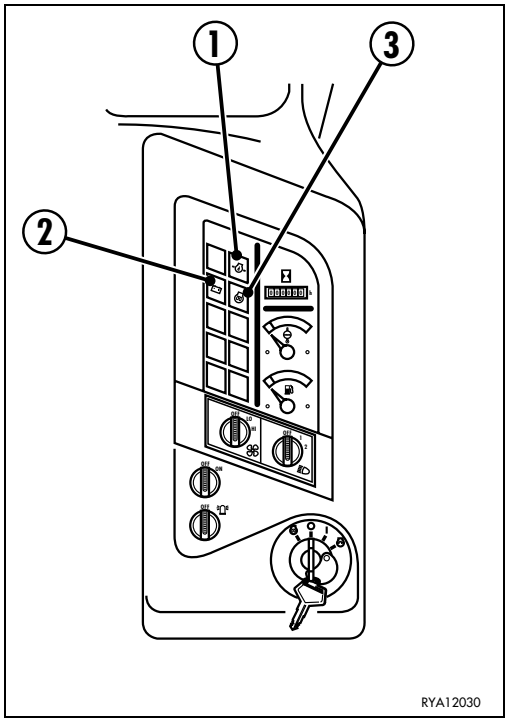

1 - ENGINE OIL PRESSURE WARNING LIGHT

This warning light comes on and makes the acoustic alarm sound with engine at rest when the ignition circuit is operated, then goes out as soon as the engine lubrication circuit is pressurized.
If this warning light remains on or comes on when the engine is running, stop the machine immediately and try to locate the trouble.

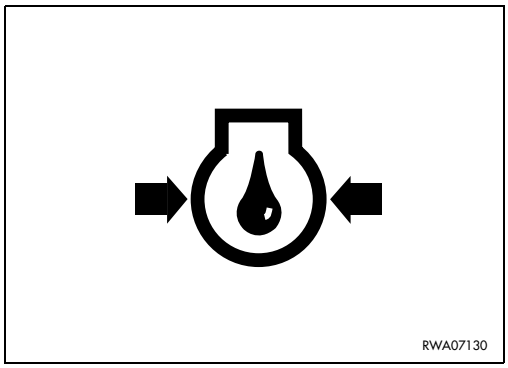

Downloaded from www.Manualslib.com manuals search engine

https://truckmanualshub.com/

2 - GENERATOR WARNING LIGHT

This warning light comes on and makes the acoustic alarm sound when the ignition circuit is energized and goes out when the engine exceeds the idling speed; if this warning light remains on even when the engine is running at the normal operating speed, this means that the alternator does not work and the battery is not charged correctly.

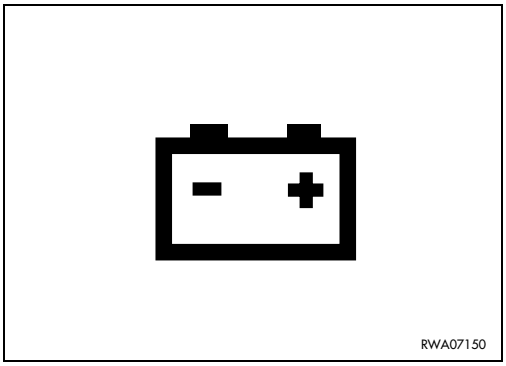

IMPORTANT

- **If the warning light remains off when the ignition key is turned to position «I», this means that the alternator is faulty or broken.**

3 - PRE-HEATING WARNING LIGHT

This warning light comes on when the ignition key is turned to position « » to start the engine at low temperatures (see “3.6.2.2 STARTING WITH COLD ENGINE OR IN COLD CLIMATES”).

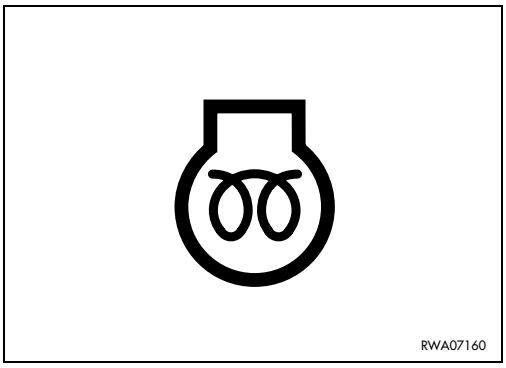

Downloaded from www.Manualslib.com manuals search engine

https://truckmanualshub.com/

3.3.3 SWITCHES AND PUSH BUTTONS

1 - Fan switch
(with cab only)

2 - Working light and instrument light switch

3 - Ignition switch

4 - Boom overload alarm switch
(if installed)

5 - Revolving light switch
(if installed)

6 - Horn

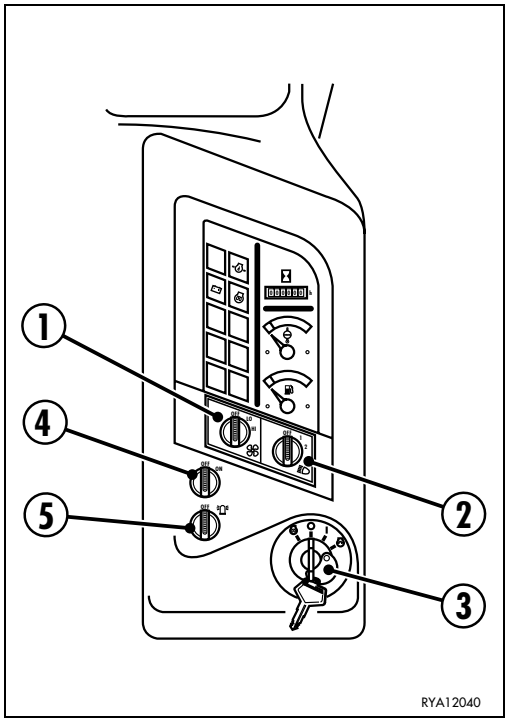

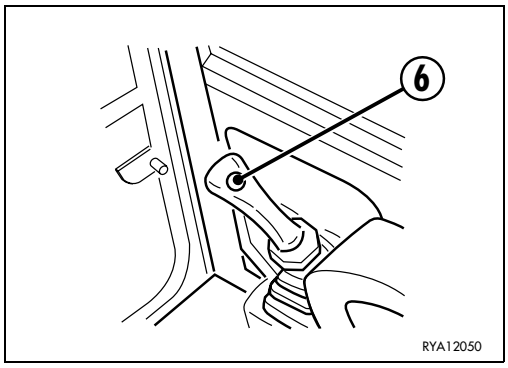

1 - FAN SWITCH (with cab only)

This is a two-speed switch that operates the fan motor. If operated after the opening of the tap installed in the engine compartment, it ensures the circulation of warm air and serves as heating switch. (See “3.3.5 VENTILATION AND HEATING”).

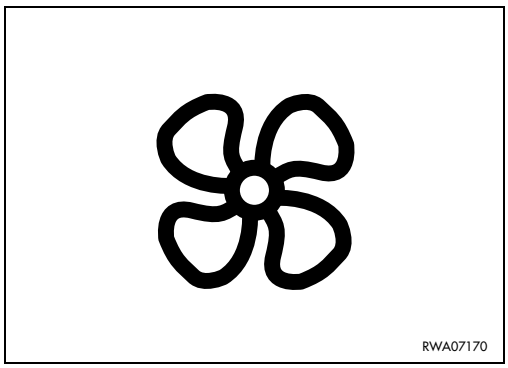

Downloaded from www.Manualslib.com manuals search engine

https://truckmanualshub.com/

2 - WORKING LIGHT AND INSTRUMENT LIGHT SWITCH

This is a rotary switch with three positions marked by the following symbols: (OFF - 1 - 2).

1) Enables the instrument light circuit

2) Enables the working light circuit

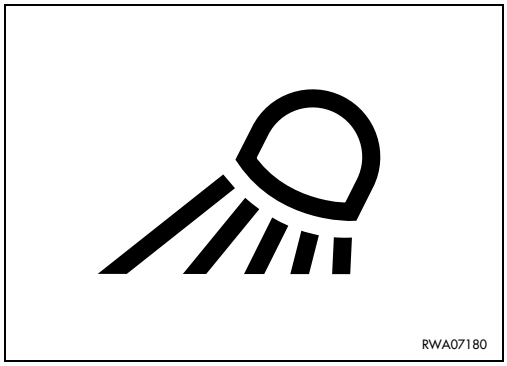

3 - IGNITION SWITCH

This is a rotary key switch with four positions marked by the following symbols: « » - **O** (OFF) - **I** - « » (START).
For the use of this switch, see “3.6.2 STARTING THE ENGINE”).

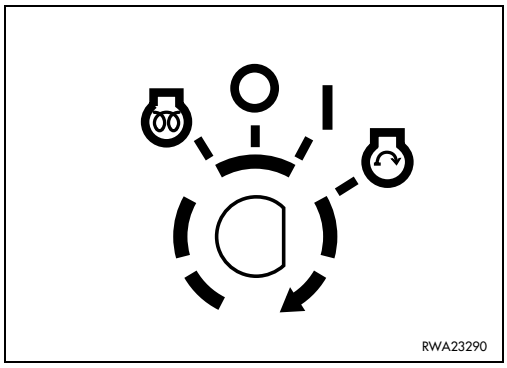

4 - BOOM OVERLOAD ALARM SWITCH (if installed)

This is a rotary switch with two positions (OFF - ON) and, if operated, makes it possible to define when the capacity limit has been reached.

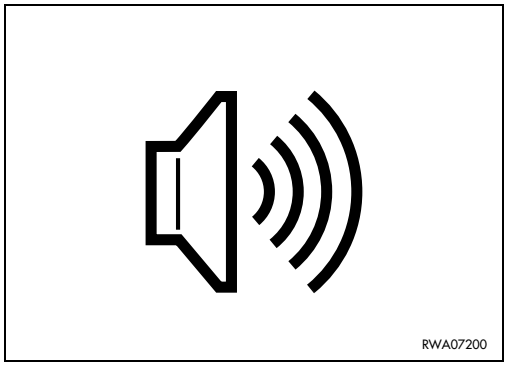

5 - REVOLVING LIGHT SWITCH (if installed)

This is a tow-position rotary switch and, if pressed, operates the revolving light.

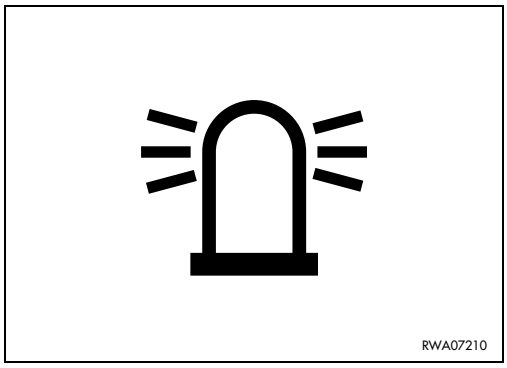

Downloaded from www.Manualslib.com manuals search engine

https://truckmanualshub.com/

6 - HORN

This push button is positioned on the right lever grip and serves to warn the persons in the vicinity at the beginning of work and in case of danger.

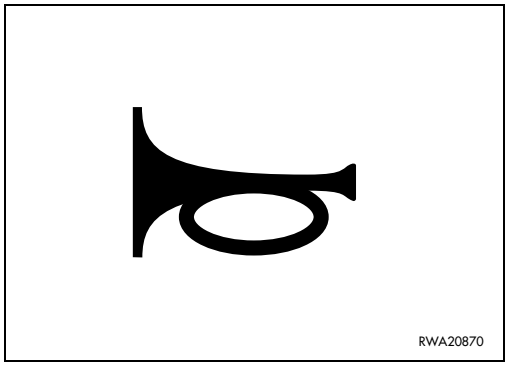

Downloaded from www.Manualslib.com manuals search engine

https://truckmanualshub.com/

3.3.4 ELECTRICAL ACCESSORIES

1 - Engine acoustic alarm
2 - Windshield wiper / washer switch (with cab only)
3 - Overhead lamp (with cab only)
4 - Electric outlet

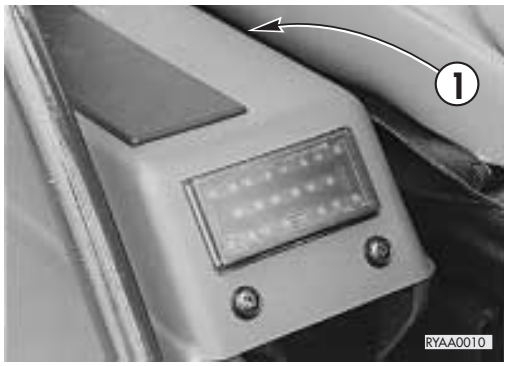

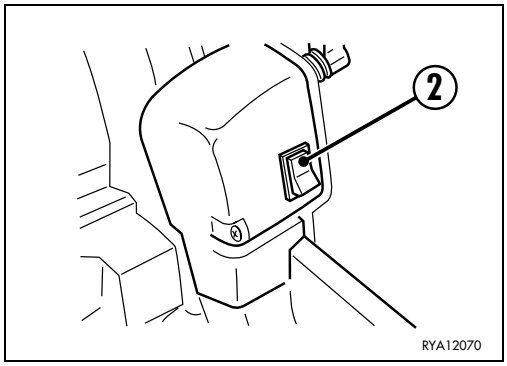

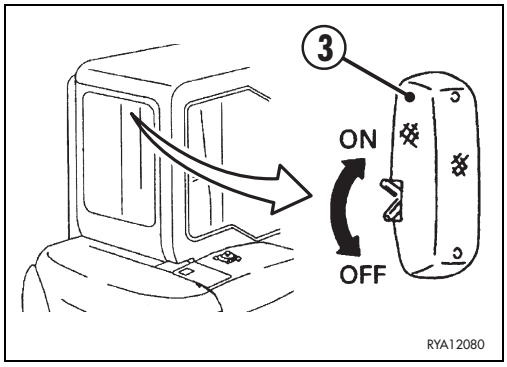

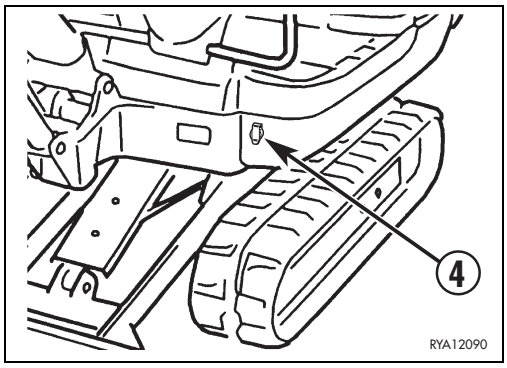

Downloaded from www.Manualslib.com manuals search engine

https://truckmanualshub.com/

1 - ENGINE ACOUSTIC ALARM

This alarm starts sounding when the circuits are energized with the ignition key (rotation to position “**I**”) and is automatically disconnected when the engine is started.
If the alarm sounds during the use of the machine, it indicates:

- Engine oil low pressure.
- Overheating of the engine cooling circuit.
- Faulty alternator or worn out belt.

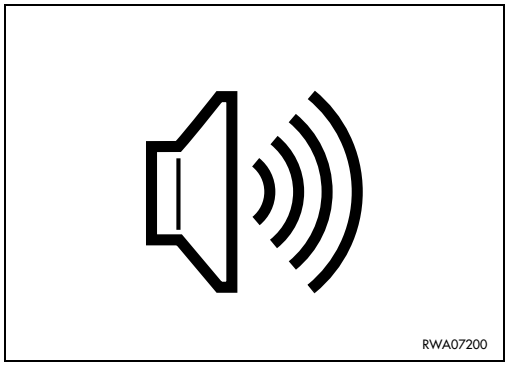

2 - WINDSHIELD WIPER / WASHER SWITCH (only on machines with cab)

With the first click it operates the windshield wiper, while with the second click (with automatic return to the first) it operates the windshield washer.

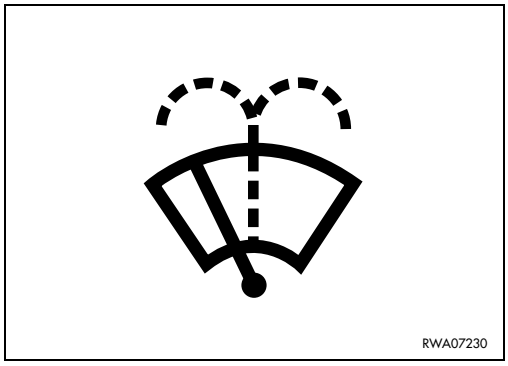

3 - OVERHEAD LAMP (only on machines with cab)

It is used to check the instruments and the inside of the cab when visibility is insufficient.
To turn it on, press the switch to position ON.

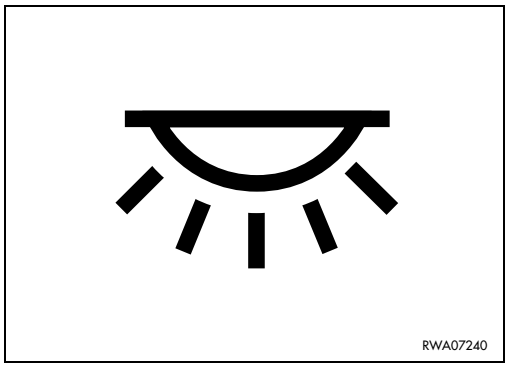

4 - ELECTRIC OUTLET

An electric outlet is positioned on the front part of the machine for the connection of a lighting device for routine and maintenance operations.
It is a two-pole outlet and is in compliance with the ISO 4165-1979 standard.
Power supply 12V

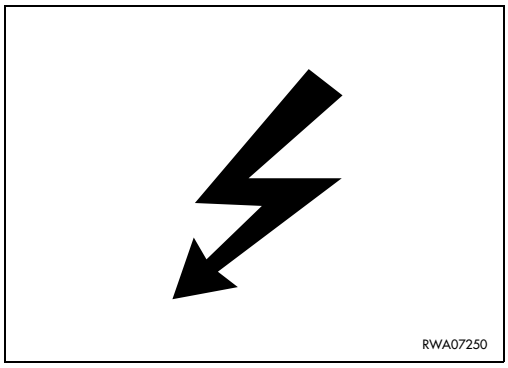

Downloaded from www.Manualslib.com manuals search engine

https://truckmanualshub.com/

3.3.5 MACHINE CONTROLS

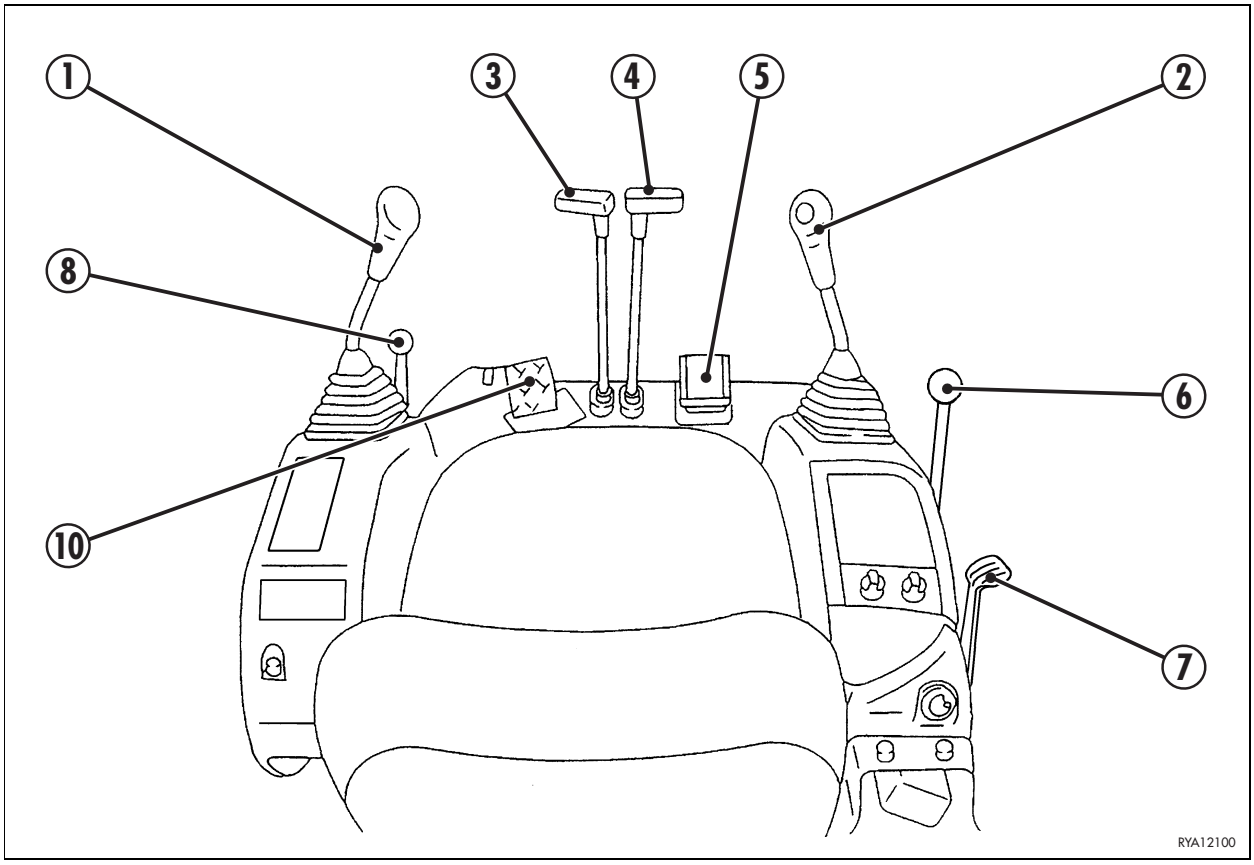

1 - Left equipment control lever
2 - Right equipment control lever
3 - Left travel and steering control lever
4 - Right travel and steering control lever
5 - Boom swing control pedal
6 - Blade control lever
7 - Accelerator lever
8 - Left safety device control lever
9 - Speed increase push button
10 - Optional equipment control pedal
11 - Upper structure rotation locking lever

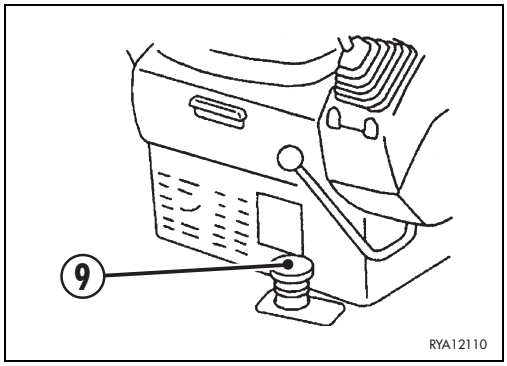

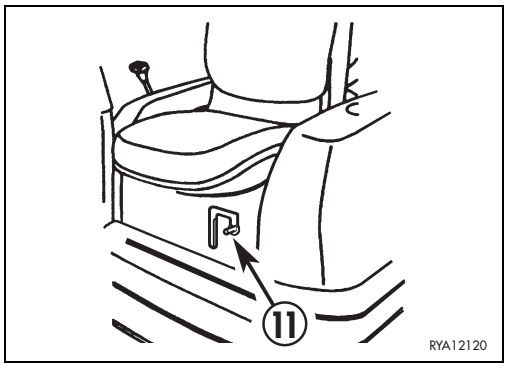

Downloaded from www.Manualslib.com manuals search engine

https://truckmanualshub.com/

1-2 - EQUIPMENT CONTROL LEVERS

DANGER

- **Before carrying out any manoeuvre with these levers, the operator must be seated in the work position with fastened safety belt; before any manoeuvre he must perform the operations described in “3.13 USING THE WORK EQUIPMENT”).**
- **Before leaving the operating position, lower the equipment to the ground and lock the safety device, then stop the engine.**

The control lever (1) is positioned on the operator’s left and controls the arm and the upper structure rotation, while the control lever (2) is positioned at the operator’s left and controls the boom and the bucket.

The following diagrams show the basic manoeuvres and the possible combined manoeuvres.

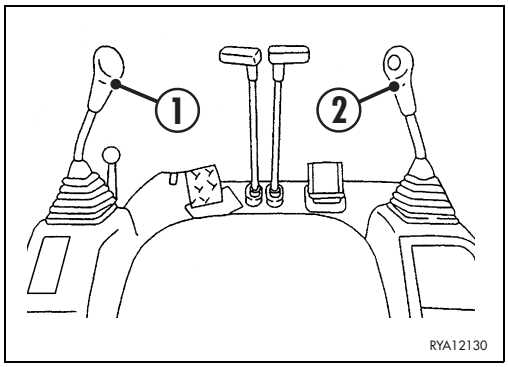

LEVER 1 (BASIC MANOEUVRES)

N - Neutral
A - Arm opening
B - Rotation to the right
C - Arm folding
D - Rotation to the left

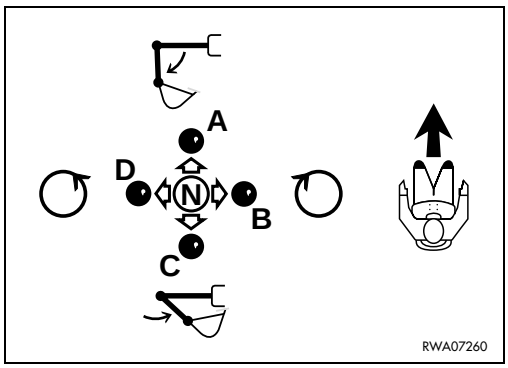

LEVER 2 (BASIC MANOEUVRES)

N - Neutral
A - Boom lowering
B - Bucket opening
C - Boom raising
D - Bucket folding

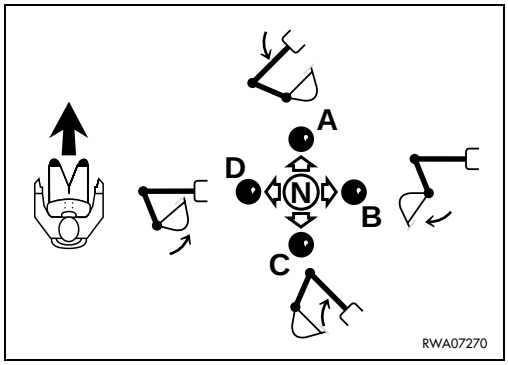

Downloaded from www.Manualslib.com manuals search engine

https://truckmanualshub.com/

If the levers are operated in directions that are inclined with respect to the machine axis, simultaneous movements proportional to the angle of inclination are obtained, since the two hydraulic distributors corresponding to each single function are engaged at the same time.

LEVER 1 (COMBINED MANOEUVRES)

N - Neutral
A - Arm opening and rotation to the left
B - Arm opening and rotation to the right
C - Rotation to the right and arm folding
D - Rotation to the left and arm folding

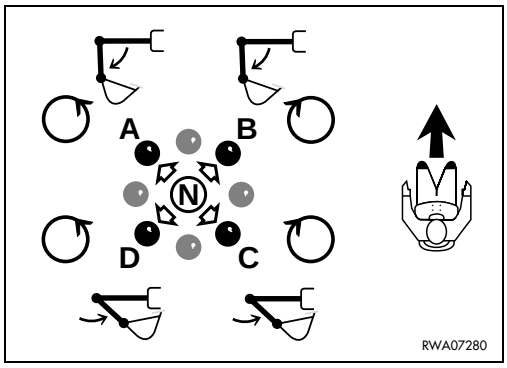

LEVER 2 (COMBINED MANOEUVRES)

N - Neutral
A - Boom lowering and bucket folding
B - Boom lowering and bucket opening
C - Bucket opening and boom lifting
D - Bucket folding and boom lifting

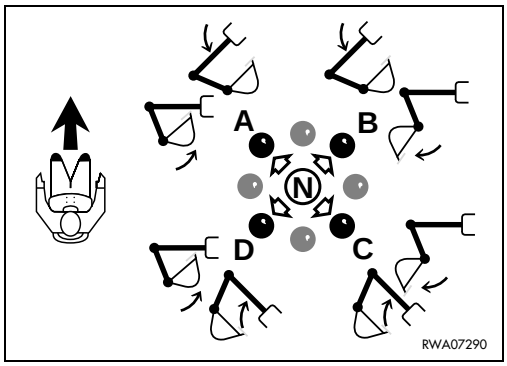

IMPORTANT

- **Before rotating the upper structure, make sure that the rotation locking pin is raised (released).**
- **The horn is positioned on the right lever grip and must be used to warn the persons in the vicinity at the beginning of work and in case of danger.**
- **All movements are locked by shifting the safety device lever to the lock position (see pos. 8).**

Downloaded from www.Manualslib.com manuals search engine

https://truckmanualshub.com/

3-4 - TRAVEL AND STEERING CONTROL LEVERS

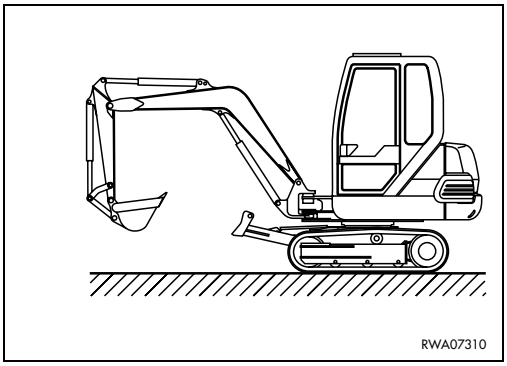

DANGER

- **Before carrying out any manoeuvre with these levers, the operator must be seated in the work position with fastened safety belt.**
- **Before moving, make sure that the upper structure is directed towards the blade and that all the safety devices have been engaged; if the upper structure is turned by 180°, the controls are inverted.**
  (See "3.6.5 HOW TO MOVE THE MACHINE").
- **Failure to comply with these rules may result in serious accidents.**

The levers (3) and (4) serve to operate the left and right travel motors, respectively, and control the forward and the reverse gear according to the movements indicated.

N - Neutral

A - Forward gear

B - Reverse gear

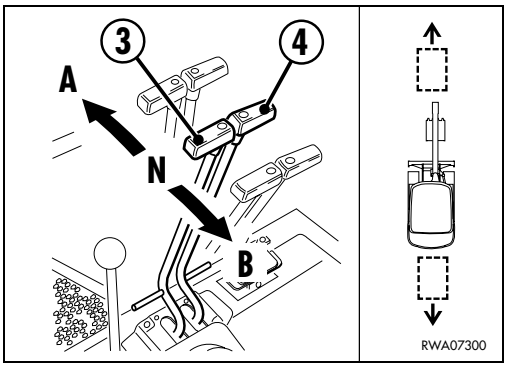

IMPORTANT

- **All movements are locked by shifting the safety device lever to the lock position (see pos. 8).**

5 - BOOM SWING CONTROL PEDAL

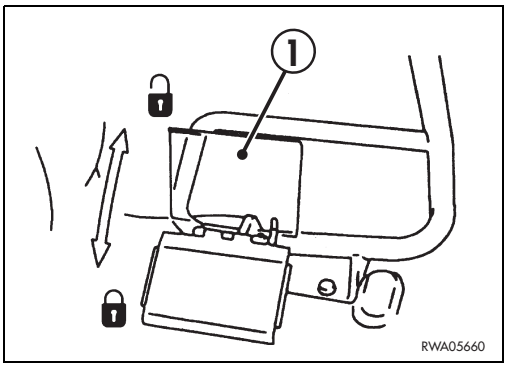

DANGER

- **Always engage the safety device (1) when the use of this control pedal is not required, during travel and when parking the machine.**
  If this control pedal is inadvertently pressed, it may cause serious accidents.

This pedal controls the boom swing to the right and to the left according to the movements indicated.

N - Neutral

A - Swing to the left

B - Swing to the right

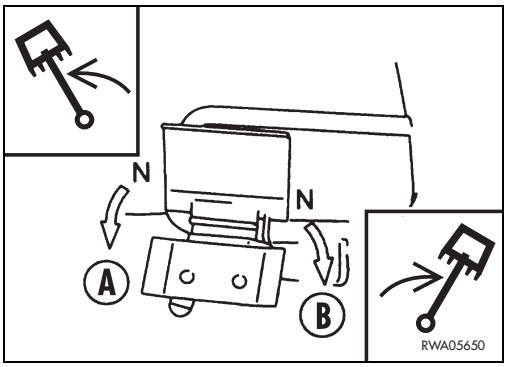

IMPORTANT

- **All movements are locked by shifting the safety device lever to the lock position (see pos. 8).**
- **The boom swing is useful when it is necessary to dig beyond the track outline; do not use it during the work cycle.**

Downloaded from www.Manualslib.com manuals search engine

https://truckmanualshub.com/

6 - BLADE CONTROL LEVER

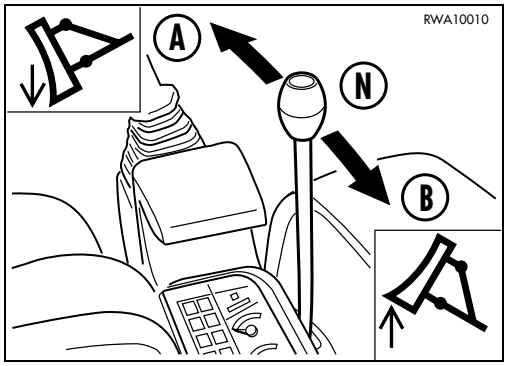

DANGER

- **Before moving the machine, make sure that the blade is completely raised.**

This lever controls the raising and lowering of the blade according to the movements indicated.

N - Neutral

A - Blade lowering

B - Blade raising

7 - ACCELERATOR LEVER

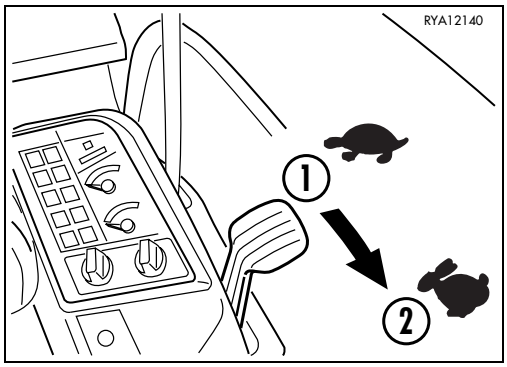

This lever serves to adjust the speed and power of the engine.

- Idling position (1):
  Lever pushed completely forward.
- Maximum speed position (2):
  Lever pulled completely backward.

Use the accelerator lever with care, especially when the machine is under strain or is working in difficult conditions. Avoid any useless acceleration, in order to reduce consumption and extend the life of either the engine and the machine.

Downloaded from www.Manualslib.com manuals search engine

https://truckmanualshub.com/

8 - SAFETY DEVICE CONTROL LEVER

DANGER

- **Before leaving the operating position, lower the equipment to the ground and shift the safety device lever to the lock position.**

To lock the safety device, raise the lever (8), which will automatically shift to the lock position.
To unlock the safety device, push the lever (8) downwards until engaging it in the check coupling.

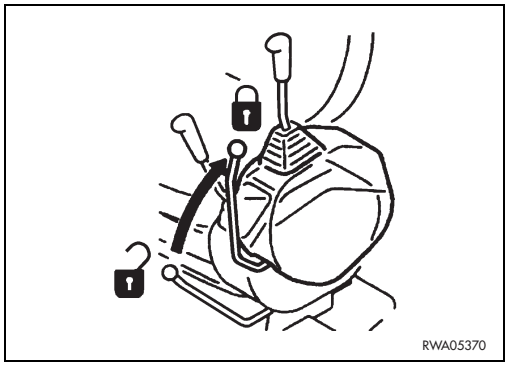

IMPORTANT

- **The movements of the equipment, the travel and the boom swing are locked when the safety device lever is in the lock position.**

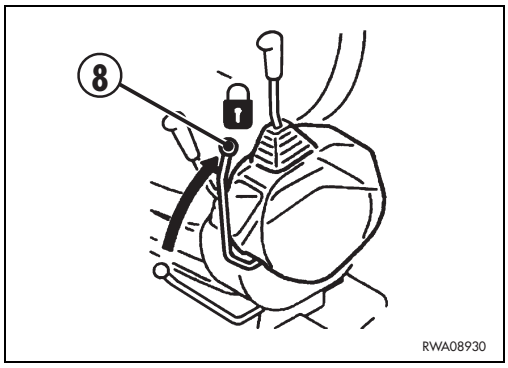

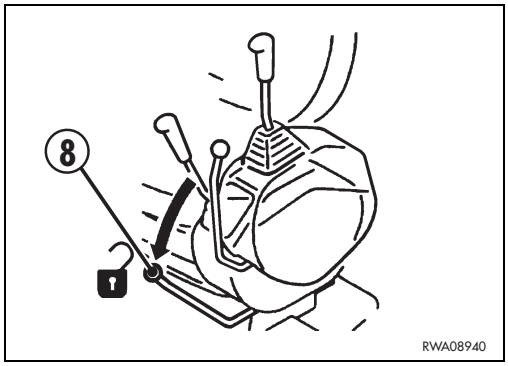

Downloaded from www.Manualslib.com manuals search engine

https://truckmanualshub.com/

9 - SPEED INCREASE PUSH BUTTON

This pedal makes it possible to increase the machine travel speed.
By pressing it, you increase the speed; by releasing it, you return to the normal speed.

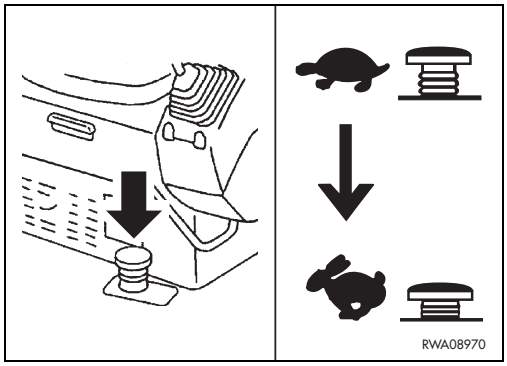

IMPORTANT

- **Do not use the speed increase pedal when changing direction or performing a counter-rotation.**

10 - OPTIONAL EQUIPMENT CONTROL PEDAL

DANGER

- **Always engage the safety lock (1) when it is not necessary to use this pedal, when the machine is travelling and when it must be parked.**
  If the control pedal is inadvertently pressed, this may cause serious accidents.

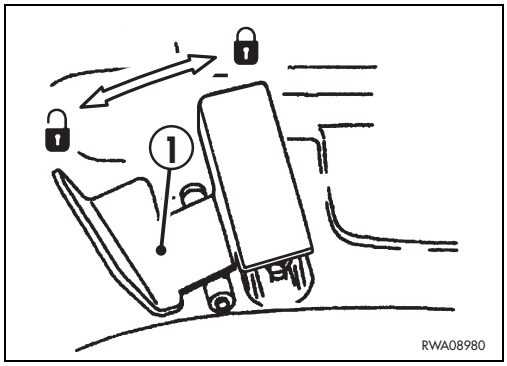

This pedal controls the delivery and return of the optional equipment oil, according to the movements indicated below.

N - Neutral (IDLE)

A - Left delivery

B - Right delivery

For the use of the pedal, see “6.1 AUTHORIZED OPTIONAL EQUIPMENT”.

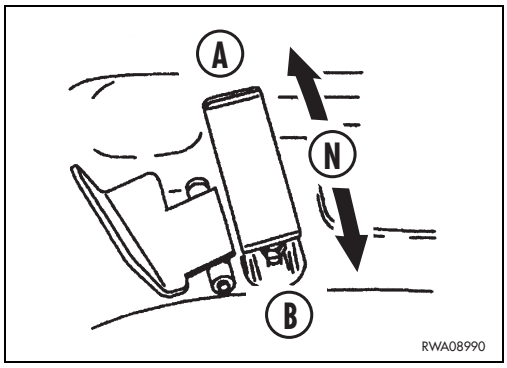

Downloaded from www.Manualslib.com manuals search engine

https://truckmanualshub.com/

11 - UPPER STRUCTURE ROTATION LOCKING LEVER

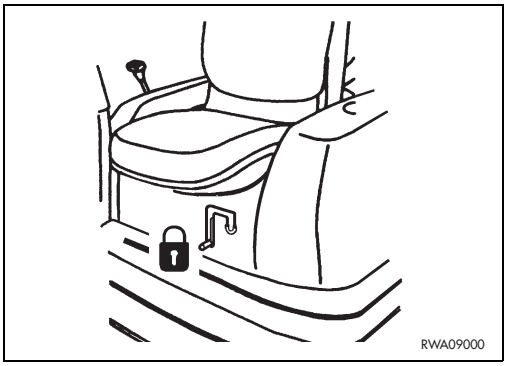

DANGER

- **During travel and transport of the machine the rotation locking lever must be shifted to the lock position; shift the lever to the lock position after rotating the upper structure so that it is parallel to the undercarriage.**
- **During travel, make sure that the upper structure is directed towards the blade; if the upper structure is rotated by 180°, the controls are inverted.**

When the lever is in the lock position, it prevents the rotation of the upper structure.
To release the upper structure from the mechanical constraint, raise the lever and set it to the unlock position.

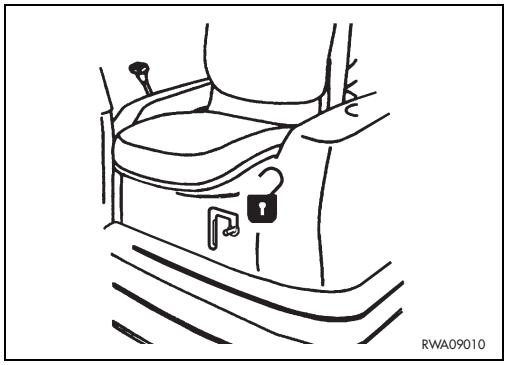

IMPORTANT

- **Do not rotate the upper structure when the lever is in the lock position.**

Downloaded from www.Manualslib.com manuals search engine

https://truckmanualshub.com/

3.4 FUSES AND RELAYS

IMPORTANT

- **When changing a fuse, make sure that the ignition key is in position «O».**
- **If the fuses are oxidized, corroded or do not fit perfectly in their seat, replace them only with new fuses having the same capacity.**
- **If the engine does not run when the ignition switch is turned to position (⏻) (START), check the main fuse and if necessary change it.**

3.4.1 FUSES

The equipment fuses are grouped on a single base positioned on the left control box, while the main fuse is positioned inside the battery compartment.

3.4.1.1 EQUIPMENT FUSES

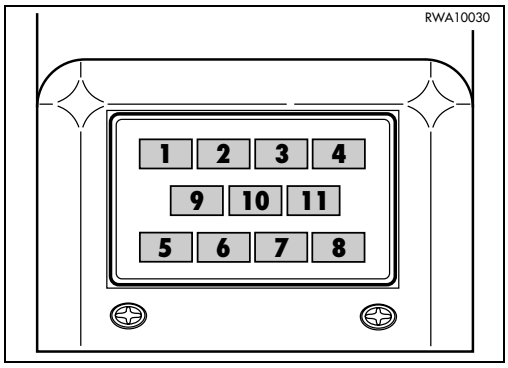

POSITION	COLOUR	CAPACITY (A)	INVOLVED CIRCUIT
1	Green	30	Engine stop
2	Violet	3	Engine accosting alarm, start relay, instrument power supply
3	Light blue	15	Fan
4	Red	10	Arrangement for radio set installation
5	Brown	7,5	Revolving light, servocontrol solenoid valve
6	Red	10	Fuel pump, horn, TBG
7	Brown	7,5	Hammer solenoid valve
8	Brown	7,5	Outlet, cab
9	Brown	7,5	Alternator, speed increase solenoid valve
10	Brown	7,5	Engine stop solenoid
11	Brown	7,5	Working light

Downloaded from www.Manualslib.com manuals search engine

https://truckmanualshub.com/

3.4.1.2 MAIN FUSE

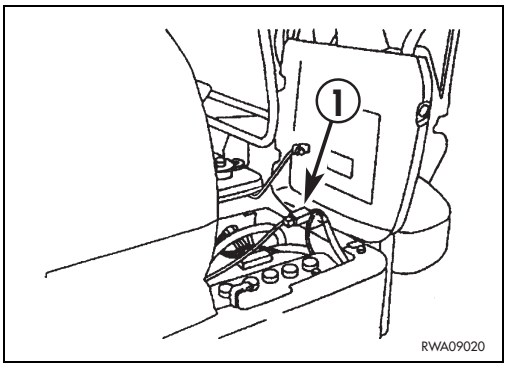

POSITION	COLOUR	CAPACITY (A)	INVOLVED CIRCUIT
1	–	60	System main fuse

Downloaded from www.Manualslib.com manuals search engine

https://truckmanualshub.com/

3.4.2 RELAYS

The horn relay is positioned inside the right control box, under the dashboard, while the other relays are grouped on a single base positioned inside the left control box.

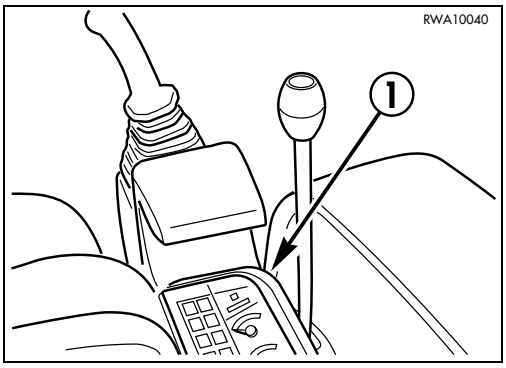

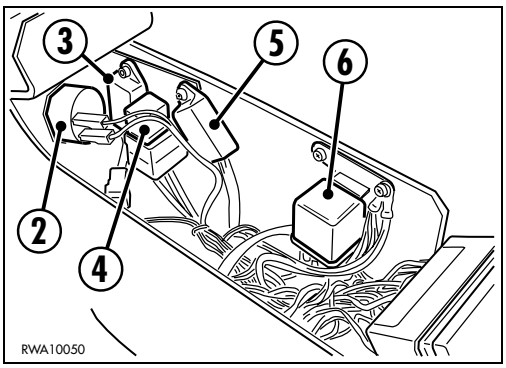

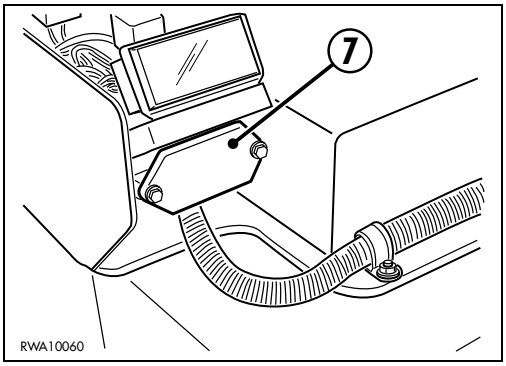

POSITION	DESCRIPTION
1	Horn relay
2	Engine acoustic alarm
3	Preheating warning light timer
4	Preheating relay
5	Solenoid excitation timer (start)
6	Solenoid excitation relay (start)
7	Safety relay

Downloaded from www.Manualslib.com manuals search engine

https://truckmanualshub.com/

3.5 GUARDS AND DRIVER'S SEAT

3.5.1 ENGINE HOOD

DANGER

- **Do not open the engine hood when the engine is running.**
- **Do not use the machine without engine hood and do not start the engine when the hood is open, unless this is expressly prescribed for certain maintenance operations.**
- **When carrying out an inspection or maintenance operation inside the engine hood, always engage the hood in the safety coupling in order to keep it open.**
- **Non-compliance with these rules may result in serious accidents.**

OPENING THE HOOD

After releasing the lock, press the push button (1) and raise the engine hood (2) until engaging it in the safety coupling.

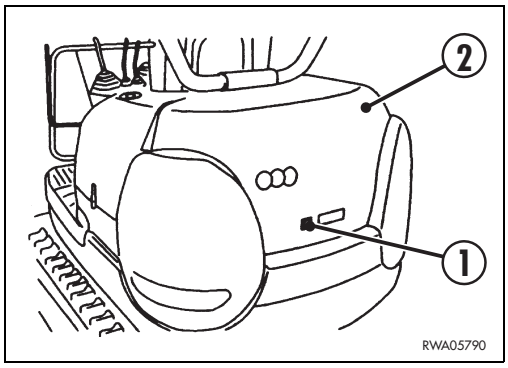

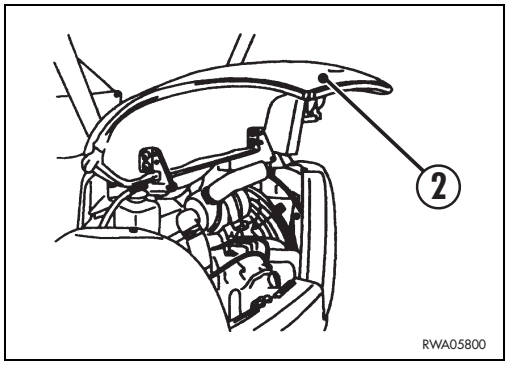

CLOSING THE HOOD

Pull the safety lever (3) with a finger, lower the hood slowly and push it downwards until engaging the lock.
Lock the hood.

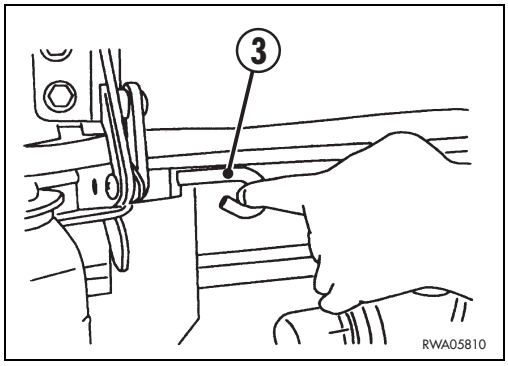

Downloaded from www.Manualslib.com manuals search engine

https://truckmanualshub.com/

3.5.2 RIGHT COUNTERWEIGHT

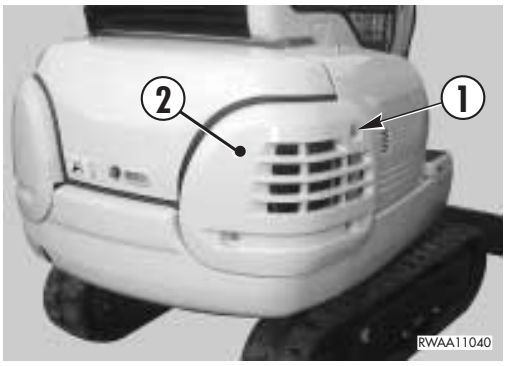

DANGER

- **Do not rotate the counterweight to the open position when the engine is running.**
- **Do not start the engine with the counterweight in open position, if this is not expressly prescribed for the maintenance operations.**
- **The failure to comply with these rules may result in serious damage.**

The rotation of the counterweight to the open position serves to permit inspection or maintenance operations on the radiator and on the heat exchanger.

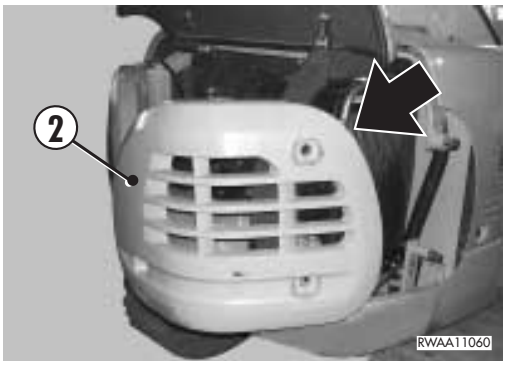

ROTATING THE COUNTERWEIGHT TO THE OPEN POSITION

1 - Open the engine hood (see "3.5.1 ENGINE HOOD").

2 - Loosen and remove the screws (1).
Use a 22 mm hexagon spanner.

3 - Rotate the lateral counterweight (2) to the maximum opening position and lock it with the safety pin (3).

ROTATING THE COUNTERWEIGHT TO THE CLOSED POSITION

1 - Remove the safety pin (3) and put it in the tool compartment, rotate the counterweight (2) to the closed position and put back the screws (1).

2 - Close the engine hood.

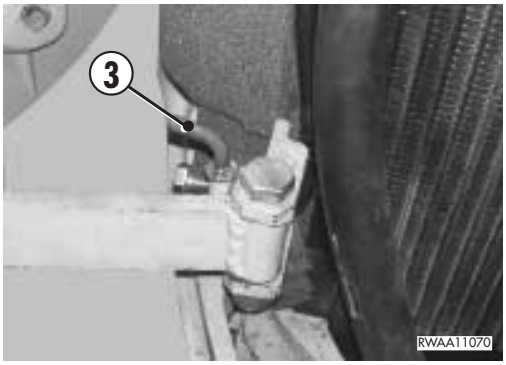

3.5.3 CANOPY

DANGER

- **The safety canopy is TOPS homologated in compliance with the ISO EN474.5 standard and with level 1 of the FOPS standard; if the canopy is subjected to an impact, or if the machine overturns, immediately contact your Komatsu Utility Dealer, who will check the stiffness of the canopy and make sure that the operator's safety is guaranteed.**

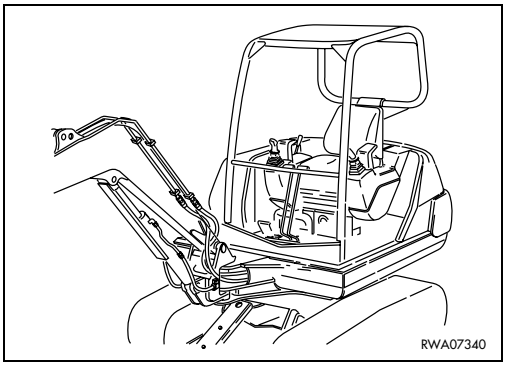

Downloaded from www.Manualslib.com manuals search engine

https://truckmanualshub.com/

3.5.4 CAB

DANGER

- **The cab is TOPS homologated in compliance with the ISO EN474.5 standard; if it is provided with an upper safety protection, it also complies with level 1 of the FOPS standard. If the cab is subjected to an impact, or if the machine overturns, immediately contact your Komatsu Utility Dealer, who will check the stiffness of the cab and make sure that the operator's safety is guaranteed.**

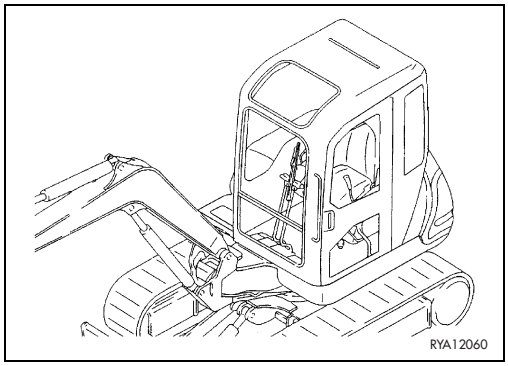

The cab is provided with total opening of the door, while the front upper windshield can be opened by positioning and fixing it under the cab roof. The lower windshield can be removed and can be opened partially by sliding the windows to the right side.
These solutions are particularly useful during the summer, since they ensure constant air circulation and therefore reduced stress for the operator.
The small tank (1) containing the detergent for the front windshield is positioned inside the cab; make sure that this tank is always filled with detergent

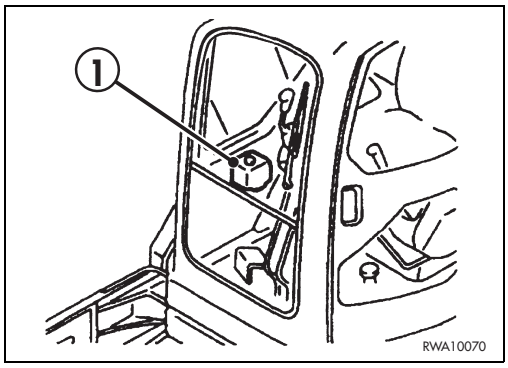

- The cab door (2) is a sliding door and can be opened completely and kept open by the couplings (3).
  The coupling is automatic and takes place when the door (2) hits against the retainer (4).
  To release the door from the coupling (3), use the opening and closing handle (5).

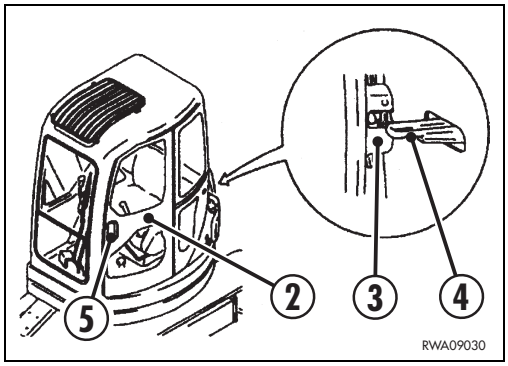

Downloaded from www.Manualslib.com manuals search engine

https://truckmanualshub.com/

- The front windshield (6) can be opened only after disengaging the couplings (7), by pulling and lifting the window.
  Open the windshield (6) by means of the opening handles (8), after disengaging the couplings (7).
  Move the windshield to the correct position: it will automatically fit in the upper locking seats.
  To close the windshield, repeat the opening procedure in the reverse order.

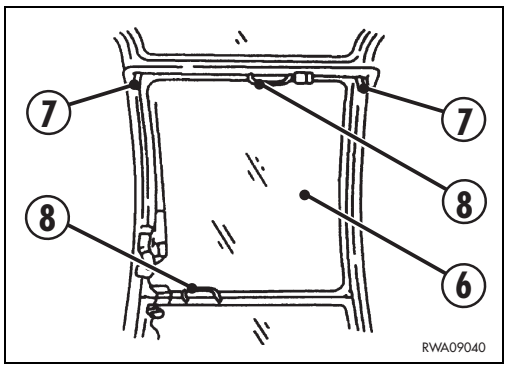

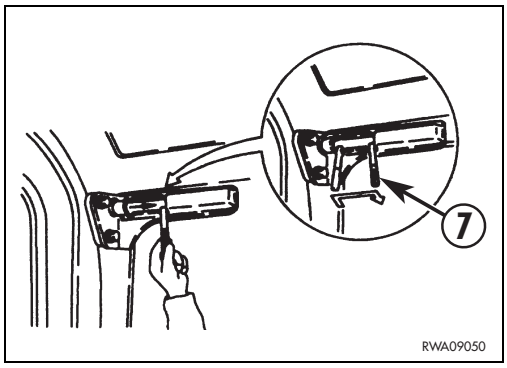

- With open front windshield, disengage the couplings (9) and remove the lower windshield (10).
  Position it behind the driver's seat and fasten it to the locking seats (11) by means of the couplings.

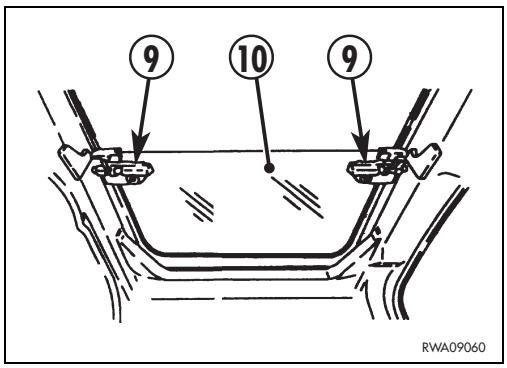

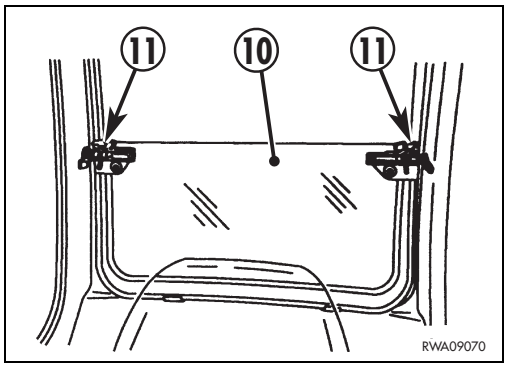

Downloaded from www.Manualslib.com manuals search engine

https://truckmanualshub.com/

The side windows (12) and (13) positioned on the right side of the cab can be opened by sliding them; press the handle (14) and pull it.

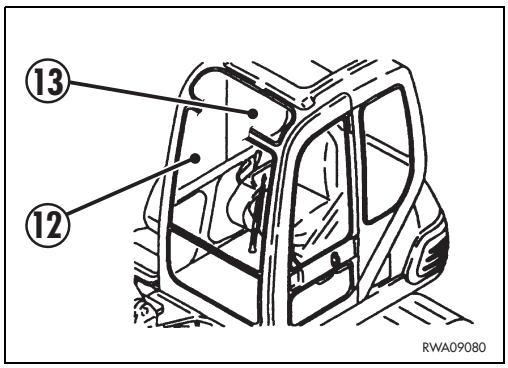

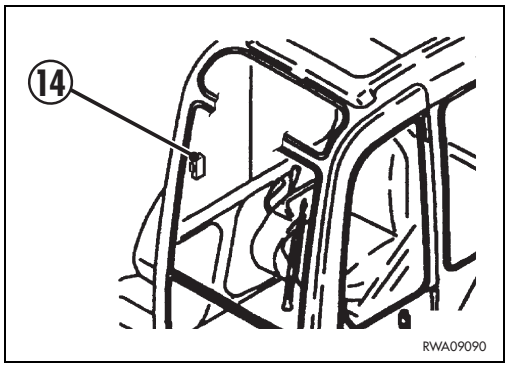

Downloaded from www.Manualslib.com manuals search engine

https://truckmanualshub.com/

3.5.5 VENTILATION AND HEATING

The ventilation and heating of the cab serve to reduce the operator's stress either in the summer and in the winter; these functions also serve to eliminate the condensate from the front window, thus ensuring visibility during both work and travel.
Ventilation and air change are achieved by means of a 2-speed fan positioned inside the cab, under the seat support.
Air distribution is achieved by means of two fixed outlets (1) with adjustable capacity for the inner flow, while the flow that has the function to defrost and defog the front window is achieved by means of a fixed outlet (2) with adjustable capacity.
A radiator having the function to heat the air conveyed into the cab is installed beside the fan; it is used in the cold season and receives the hot water necessary for the heat exchange directly from the engine cooling circuit.
The water supply flow is divided or excluded by means of a tap (3) positioned inside the engine compartment.

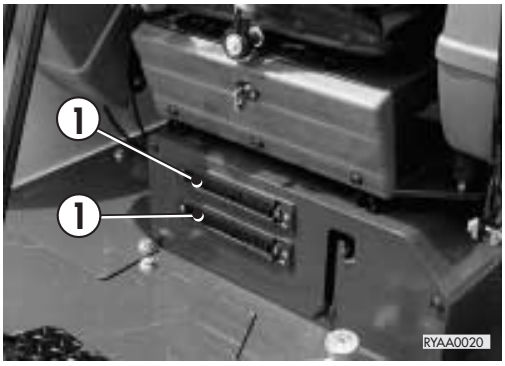

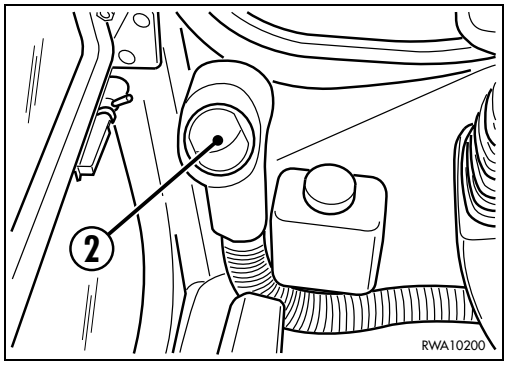

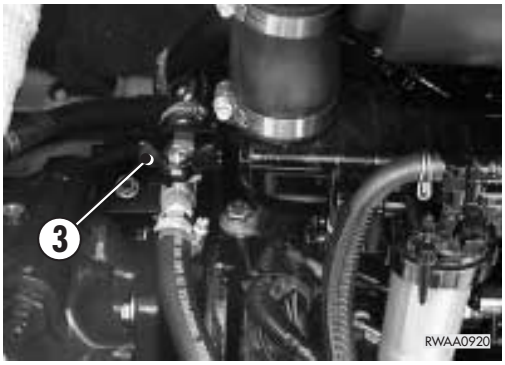

Downloaded from www.Manualslib.com manuals search engine

https://truckmanualshub.com/

3.5.6 SEAT

The seat can be adjusted as follows:

a - Longitudinal position adjustment.

b - Adjustment of the suspension degree, aimed at cushioning the inevitable vibrations and jerks as much as possible.

The seat is installed on guides that slide longitudinally, can be moved forward or backward and the operator can choose the most comfortable driving position according to his physical structure.

The longitudinal adjustment of the seat is obtained by operating the lever (1) and making the seat slide on the guides; once the desired position has been found, release the lever and carry out slight movements, in order to make sure that the lock pin is engaged in its seat.

The adjustment of the degree of suspension is carried out with the snap lever (2), according to the operator's weight.

The suspension can be stiffened or lightened according to the operator's needs; adjust the seat suspension with the lever (2) after rotating its knob to position (+) to stiffen the suspension or to the opposite position (-) to lighten it.

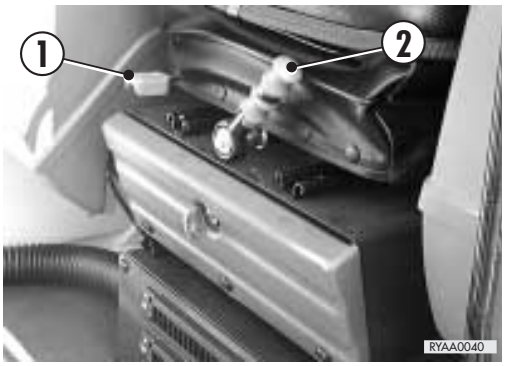

3.5.7 SAFETY BELT

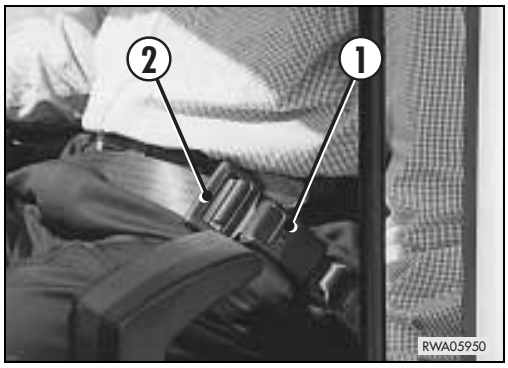

DANGER

- **Before starting the engine, fasten the safety belt.**
- **The safety belt must be changed if it is broken, damaged or worn, and in any case it must be changed every 4 years.**

The safety belt (1) is of the type with two coupling points and adjustable length (2); it must be well tightened and hold the operator's hips, while leaving the upper part of the body completely free.

Downloaded from www.Manualslib.com manuals search engine

https://truckmanualshub.com/

3.5.8 EMERGENCY EXIT

The machines with cab are provided with an emergency exit located in the rear window (1).
Inside the cab you will find a hammer (2) to be used to break the window (1) in case of emergency.

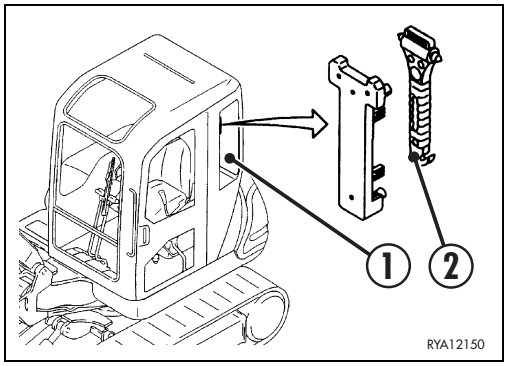

IMPORTANT

- **Make sure that the hammer is always available and in the correct position inside the cab.**

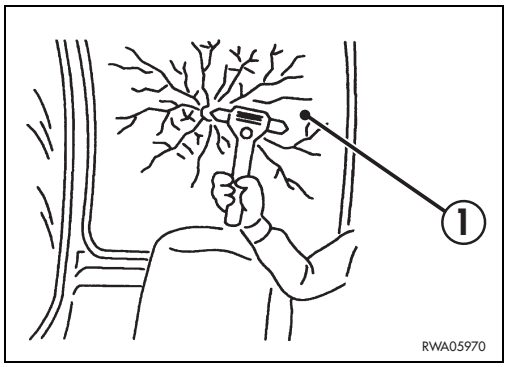

3.5.9 TECHNICAL DOCUMENTATION CASE

CAUTION

- **The operation manual and the spare parts catalogue are integral parts of the machine and must accompany it even in case of resale.**

The technical documentation case is positioned in the appropriate container (1) inside the seat support.
Keep the use and maintenance manual in this place, so that you can consult it at any moment.

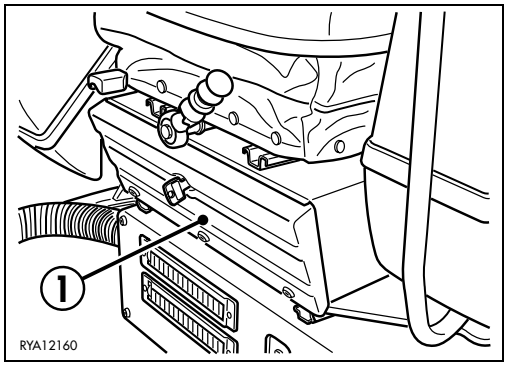

Downloaded from www.Manualslib.com manuals search engine

https://truckmanualshub.com/

3.5.10 FIRE EXTINGUISHER

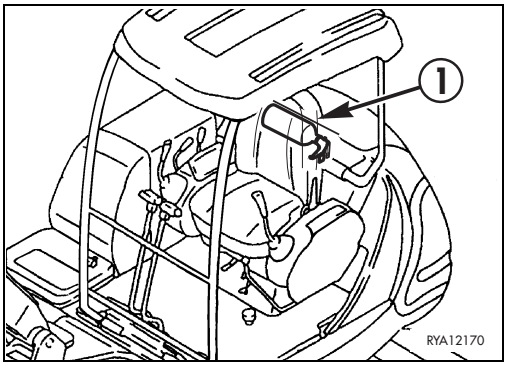

CAUTION

- **The machine's owner must provide for installing and fixing the fire extinguisher where prescribed.**
- **Periodically check the fire extinguisher support.**
- **Periodically make sure that the fire extinguisher is full.**

If the operator expects that he may need the fire extinguisher (1) on the machine, he must install it by fixing it on the rear compartment of the seat by means of the appropriate support.

3.5.11 FIRST AID KIT

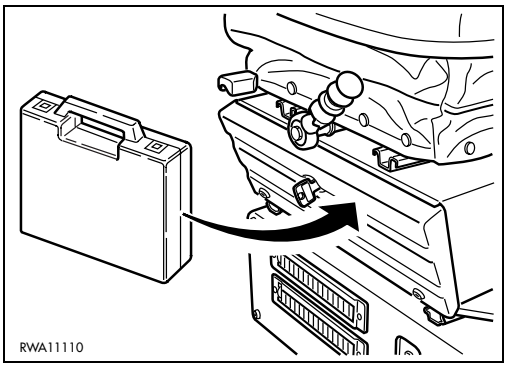

CAUTION

- **Periodically make sure that the first aid kit contains the necessary disinfectants, bandages, medicins, etc. and check their conditions and expiry date.**

The first aid kit must be installed by the owner of the machine and positioned inside the seat support, where also the technical documentation is usually kept.

Downloaded from www.Manualslib.com manuals search engine

https://truckmanualshub.com/

3.6 USE OF THE MACHINE

3.6.1 CHECKS BEFORE STARTING THE ENGINE

3.6.1.1 VISUAL CHECKS

DANGER

- **Dirt, oil and fuel in the engine compartment near its hot parts may damage the machine and even cause fires.**
  Check frequently and eliminate any leakage; if leakages occur repeatedly, contact your Komatsu Utility Dealer.

Before starting the engine, check around and under the machine to verify:

1 - if there are loose screws or nuts;
2 - if there are oil, fuel or coolant leakages;
3 - the wear of the work equipment;
4 - the fastening of the electrical connections;
5 - the fastening of the engine exhaust pipe and manifold;
6 - the track tension and the fastening of the sprockets;
7 - if the safety and warning plates are sufficiently clean;
8 - if the handles of the operator’s cab are clean.

Any leak or anomaly must immediately be repaired/eliminated and any trace of oil or grease must be removed.
Further visual checks concern:

9 - the condition of the safety belt;
10 - the efficiency of the instruments and of the dashboard;
11 - the condition of the cab windows and the efficiency of the working lights.

3.6.1.2 DAILY CHECKS

DANGER

- **Do not smoke while refuelling or topping up the oils and do not use naked flames or non-homologated lighting means to check the fuel and oil levels, in order not to cause fires.**
- **If fuel, oil, or lubricant are spilled while filling the tanks, clean the dirty areas immediately.**

Before starting any operation, check the engine coolant, engine oil and hydraulic circuit oil levels.
At the end of work, provide for refuelling, in order to avoid the formation of condensate, always checking the fuel level on the indicator provided on the dashboard.

IMPORTANT

- **Avoid filling the tank completely, in order to leave room for the gas oil to expand.**
- **After refuelling, put back the fillercap, making sure that the bleed hole is completely open.**
- **Check the engine oil level with the machine in horizontal position and the hydraulic circuit oil level with the arm and bucket cylinders retracted and the bucket teeth on the ground.**

Downloaded from www.Manualslib.com manuals search engine

https://truckmanualshub.com/

3.6.1.3 OPERATIONAL CHECKS

DANGER

- **All the checks must be carried out by the operator while seated, with fastened safety belt.**
- **If the machine has been stopped after use or in order to carry out maintenance operations, the safety devices may have been disconnected; when the operator gets on the cab, he must make sure that all the safety locks of the equipment controls are in the correct position and therefore that the equipment cannot move suddenly and cause accidents.**

The checks concern:

1 - the lock position of the safety device;

2 - the accelerator idling position;

3 - the neutral position of the controls.

The following check is carried out by turning the ignition key to position «**I**» to apply voltage to the control panel and check the functionality of the acoustic alarm, the fuel level indicator and the engine oil pressure, generator and preheating warning lights.

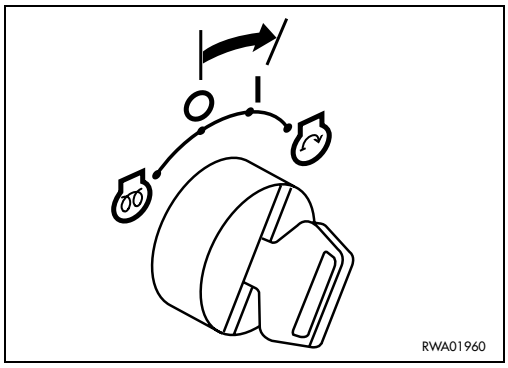

Downloaded from www.Manualslib.com manuals search engine

https://truckmanualshub.com/

3.6.2 STARTING THE ENGINE

DANGER

- **Before starting the engine, carefully read the instructions and information regarding safety given in this manual and make sure that you know the controls.**
  From the moment in which the engine is started, the operator is directly responsible for any damage that may be caused by wrong manoeuvres and non-compliance with the safety regulations and the rule of the road.
- **Before starting the engine, make sure that there is no one within the operating radius of the machine and sound the horn.**
- **Before starting the engine, turn the ignition key to position «I» to operate the automatic check and make sure that the acoustic alarm and the warning lights are working correctly.**

3.6.2.1 STARTING WITH WARM ENGINE OR IN TEMPERATE CLIMATES

1 - Turn the ignition key directly to position «⏲» (START).

2 - As soon as the engine starts, release the ignition key, which will automatically return to position «**I**».

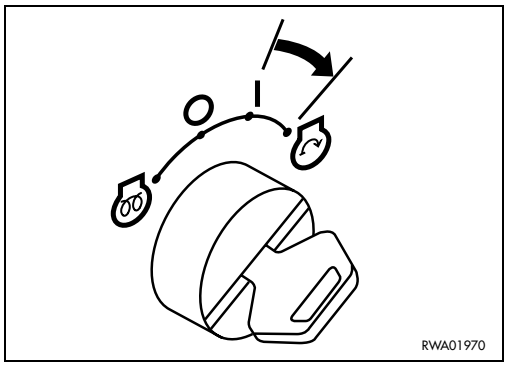

IMPORTANT

- **If the engine does not start within 15 seconds, release the key, which will automatically return to position «I» and wait for 15 seconds before trying again.**

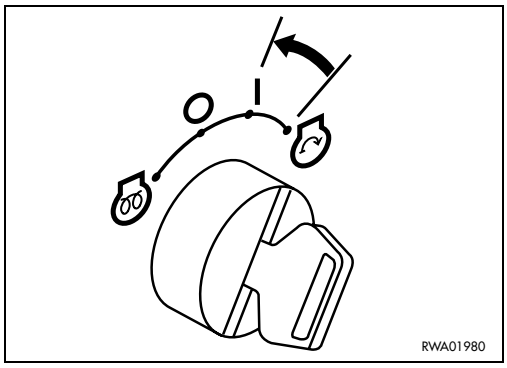

Downloaded from www.Manualslib.com manuals search engine

https://truckmanualshub.com/

3.6.2.2 STARTING WITH COLD ENGINE OR IN COLD CLIMATES

DANGER

- **Do not use any fluid or product that facilitate the cold starting of the engine, since these are ether-based and may cause explosions.**

1 - Pull the accelerator lever until reaching half of its stroke and turn the ignition key to the preheating position «⏲» for maximum 15 seconds in the coldest weather.
The preheating time is determined according to the outside temperature and the recommended ratio is approximately 1 second for each degree below zero.
The preheating is signalled by the warning light positioned on the dashboard.

2 - Turn the ignition key to position «⏲» (START) until the engine starts and for maximum 15 seconds.

3 - As soon as the engine starts, release the ignition key, which will automatically return to position «I» and reduce the speed to idling.

IMPORTANT

- **If the engine does not start at the first attempt, repeat the operations 1 and 2 after at least 30 seconds, in order not to overload the battery.**

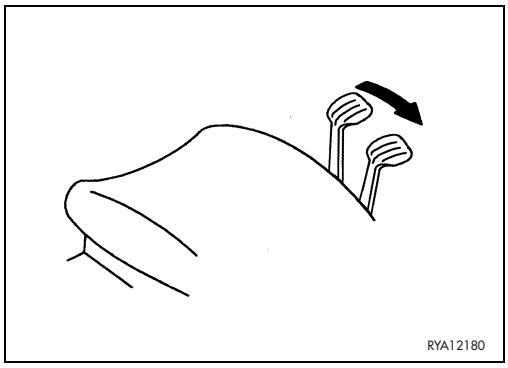

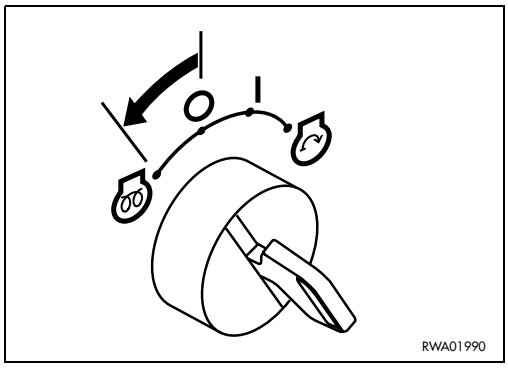

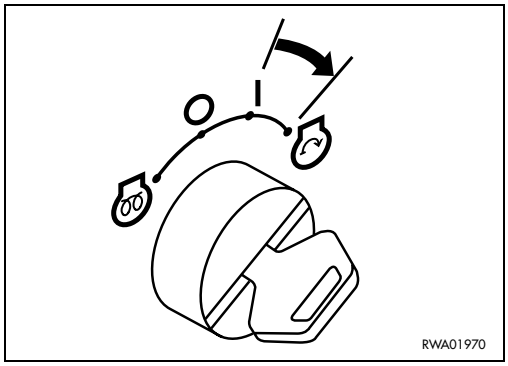

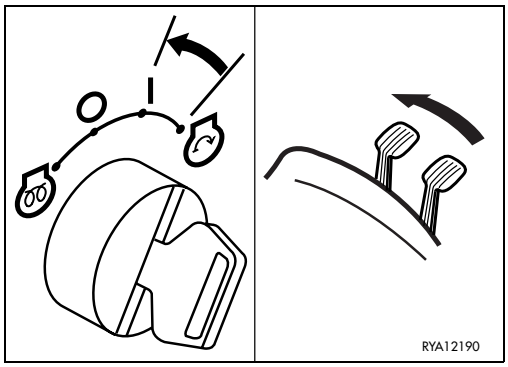

Downloaded from www.Manualslib.com manuals search engine

https://truckmanualshub.com/

3.6.3 WARMING THE ENGINE

1 - After starting the engine, let it warm up before starting work.

2 - The ideal warming up of the engine is achieved with the engine running at idling speed, which is obtained with the hand accelerator.

IMPORTANT

- **Do not accelerate completely or abruptly until the coolant temperature has reached at least 60°C.**

3 - To reduce the time necessary to warm up the engine, accelerate now and then.

4 - During the warming up of the engine, check the colour of the exhaust gases and verify if abnormal noises or vibrations can be noticed; any anomaly must be verified and its cause must be eliminated.

3.6.4 HEATING THE HYDRAULIC OIL

When warming up the engine, especially in the cold season, it is advisable to heat also the hydraulic system oil. For this reason, when the coolant temperature has reached approximately 60°C, proceed as follows:

1 - Release the safety device of the controls (See “3.1 SAFETY LOCKS”).

2 - Slowly extend and retract the arm and the bucket completely for several times.

3 - Lower the bucket to the ground and lock the safety device again.

3.6.5 HOW TO MOVE THE MACHINE

DANGER

- **Before moving the machine, make sure that you know the control functions and all the relevant safety regulations perfectly.**
- **Make sure that the upper structure is directed towards the blade and lock it in this position by means of the rotation lock.**
- **The operator must be sitting in the driving position with fastened safety belt.**
- **Before moving the machine, make sure that there is no one within the operating radius of the machine and that there are no obstacles in the surrounding area.**
- **Be extremely careful when engaging the reverse and make sure that there are no persons, working means or obstacles in the way.**
- **Avoid manoeuvres or changes of direction when travelling at full speed, since the manoeuvres carried out in these conditions cause abrupt movements.**
- **Do not use the speed increase pedal when changing direction or carrying out a counter-rotation.**

Downloaded from www.Manualslib.com manuals search engine

https://truckmanualshub.com/

Before moving the machine, check the instruments, warm up the engine and the hydraulic oil, make sure that the rotation lock is engaged, that the safety device is released, that the blade is raised and that the work equipment is at least at 40÷50 cm from the ground; the control levers must be in the neutral position.

1 - Pull the accelerator lever and set the engine running at idling speed.

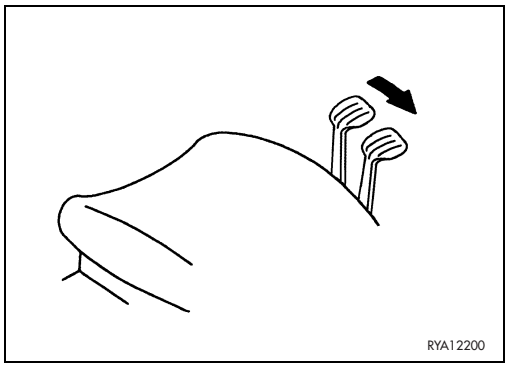

2 - Operate the levers (right and left) at the same time, shifting them forward to make the machine advance or backward to make it move in reverse.

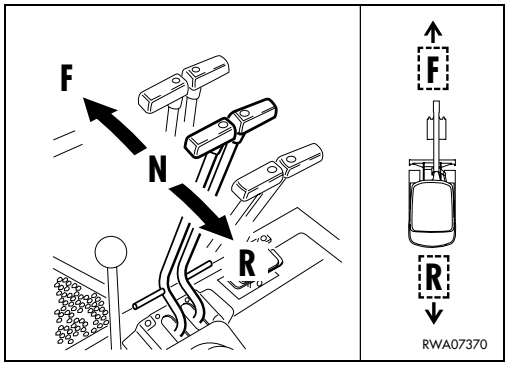

3 - Press the speed increase pedal to increase the speed of the machine.

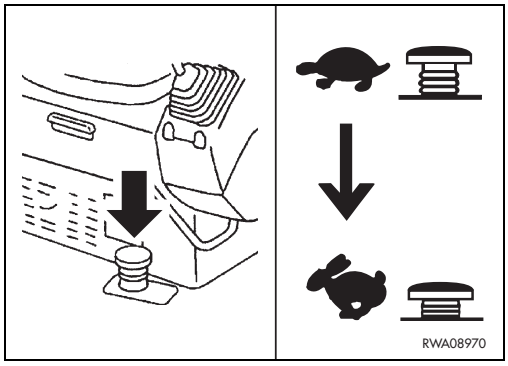

Downloaded from www.Manualslib.com manuals search engine

https://truckmanualshub.com/

3.6.5.1 STEERING (CHANGING DIRECTION)

DANGER

- **When the blade is directed backward, the operation of the travel levers is inverted; before operating the travel levers, check the position of the blade.**
- **If possible, avoid any abrupt change of direction. Counter-rotations should be carried out with the machine at rest.**
- **Due to the considerable friction created when changing direction, it is advisable not to use the speed increase pedal.**

CHANGING DIRECTION WHEN THE MACHINE IS NOT MOVING

To turn to the left, operate the RIGHT travel lever as indicated below. To move FORWARD, push the lever. To move BACKWARD, pull the lever.

IMPORTANT

- **To turn to the right, operate the LEFT travel lever in the same way.**

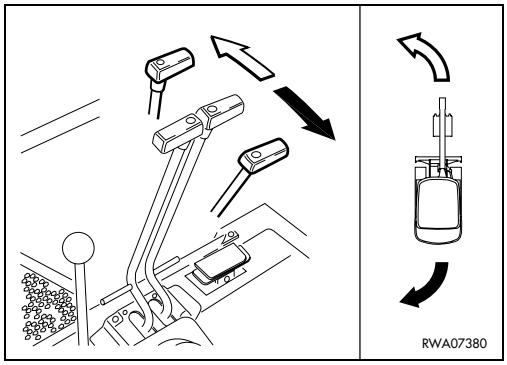

CHANGING DIRECTION WHEN THE MACHINE IS MOVING (the left and right travel levers are in the same position)

To turn to the left, shift the LEFT travel lever back to the neutral position; the machine will turn to the left.

IMPORTANT

- **To turn to the right, operate the RIGHT travel lever in the same way.**

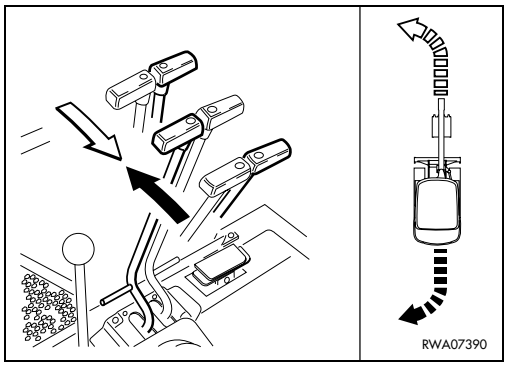

HOW TO CARRY OUT A COUNTER-ROTATION (with the machine not moving)

To turn to the left, pull the LEFT travel lever backward and push the RIGHT travel lever forward.

IMPORTANT

- **To carry out a counter-rotation to the right, pull the RIGHT travel lever backward and push the LEFT travel lever forward.**

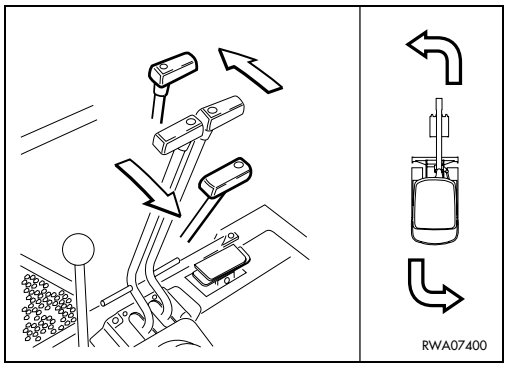

Downloaded from www.Manualslib.com manuals search engine

https://truckmanualshub.com/

3.6.5.2 MOVING ON SLOPES

DANGER

- **Do not work on slopes with inclination exceeding 30°, since in these conditions the machine may overturn.**
- **When moving on slopes, do not use the travel speed increase pedal.**

When working on slopes some precautions should be taken to avoid risks for the operator and anyone in the vicinity; the checks and operations to be carried out are the following:

1 - Always check the work area for snow, landslips, gravel, loose ground and anything that may suddenly modify the work conditions and the stability of the machine.

2 - When it is necessary to travel downhill, the bucket must always be directed downwards, in the position indicated in the figure.

3 - When travelling uphill, the bucket must always be directed upward.

4 - When moving the machine during work, always lower the bucket.

5 - Carry out any lateral movement on a flat surface at the beginning or at the end of the slope; if this is not possible, move obliquely, keeping the machine axis as parallel to the slope directrix as possible.
Do not move too obliquely or, even worse, with the machine axis rotated by 90° with respect to the slope directrix.

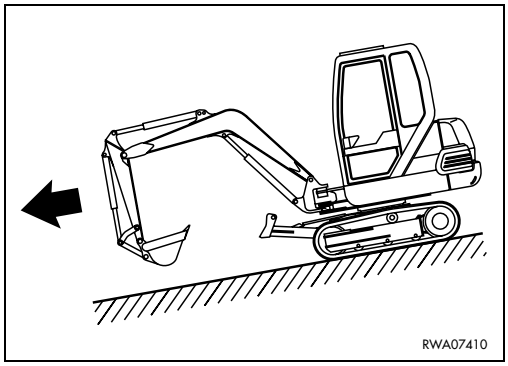

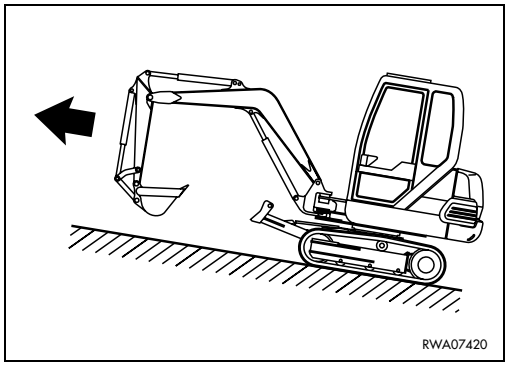

Downloaded from www.Manualslib.com manuals search engine

https://truckmanualshub.com/

3.6.5.3 MAXIMUM IMMERSION DEPTH

DANGER

- **If it is necessary to work with the machine immersed in water on river banks or sea shores, always check the water depth and the current flow.**
- **Make sure that the surface on which you are working is sufficiently firm.**

If you have to work in water, check that the maximum depth of immersion is lower than the centre of the top guide roller, and in any case that the engine cooling fan does not come into contact with the water; otherwise it may break or be damaged.

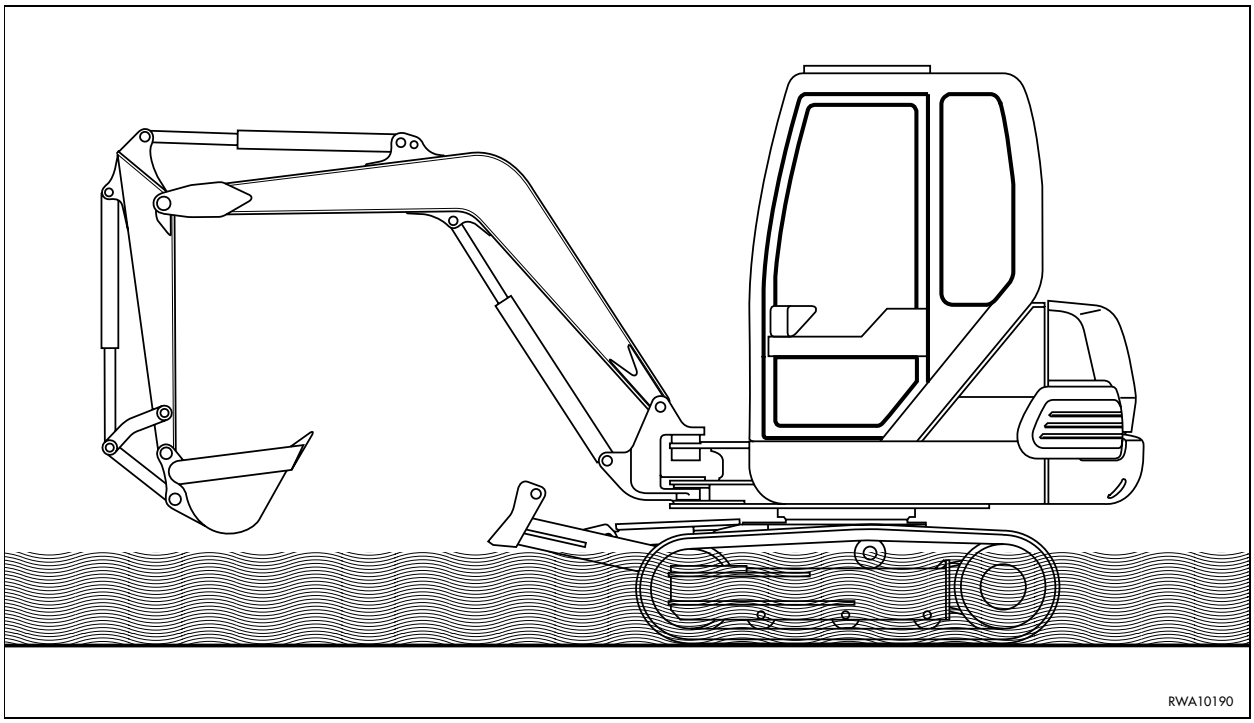

CAUTION

- **When working in water or on muddy ground, lubricate the articulations more frequently than usual.**
- **After work, remove any dirt or mud and lubricate the articulations.**

Downloaded from www.Manualslib.com manuals search engine

https://truckmanualshub.com/

3.7 PARKING THE MACHINE

3.7.1 PARKING ON LEVEL GROUND

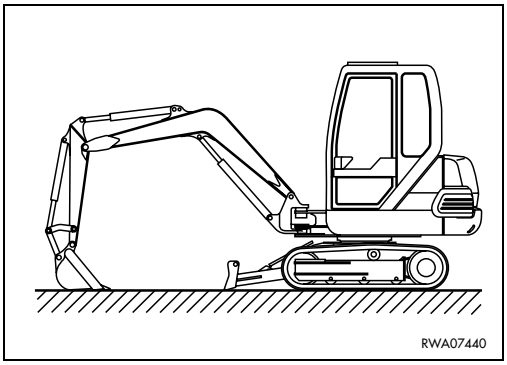

DANGER

- **Park the machine on firm and level ground, in a sufficiently wide space, so that the checks, the daily lubrication and the refuelling can be carried out without problems.**
- **Lower the blade and the work equipment to the ground.**
- **Keep to all the safety rules, in order to avoid any movement of the machine when the operator is absent.**
- **When leaving the machine, remove the ignition key, use the handles and lock the cab, if provided.**

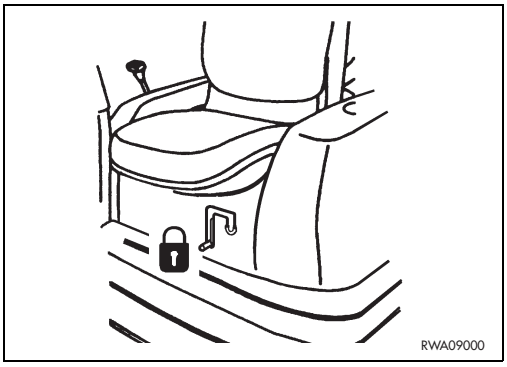

1 - Park the machine on firm and level ground, in a sufficiently wide space.

2 - Lower the blade and the bucket to the ground; if there is not enough space, the work equipment must be folded and secured with the appropriate locks.

3 - Engage the safety lock of the boom swing control, of the optional equipment control and of the upper structure rotation and shift the safety device lever to the lock position.

4 - Stop the engine following the procedure indicated in paragraph “3.8 STOPPING THE ENGINE”.

5 - Leave the driving position using the tracks and the handles.

6 - Refuel, taking the necessary precautions.

7 - Remove the ignition key and lock the cab, if provided.

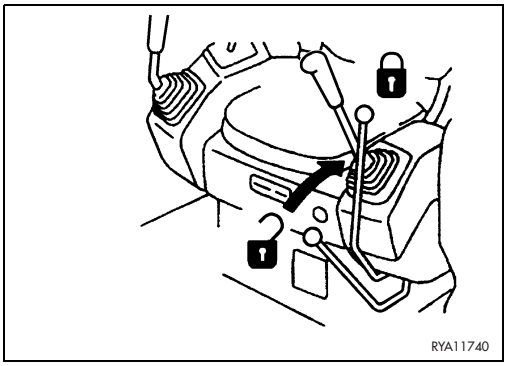

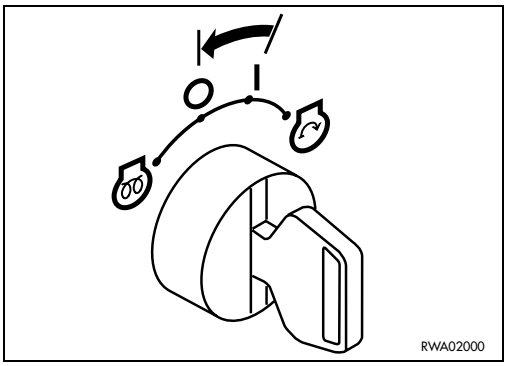

Downloaded from www.Manualslib.com manuals search engine

https://truckmanualshub.com/

3.7.2 PARKING ON SLOPES

DANGER

- **The movement of the machine when the operator is not on board may cause serious accidents and even death; to prevent this, carry out the operations described below.**
- **Park on slopes only when it is absolutely necessary.**
- **Park only with the bucket directed downwards.**

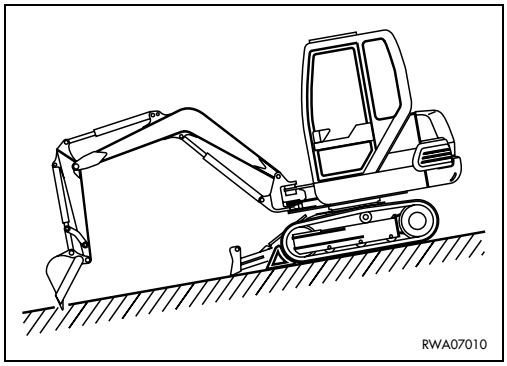

1 - Park the machine with the bucket directed downwards and resting against an obstacle.
If this is not possible due to the absence of natural obstacles, rotate the bucket in the dumping position and thrust the teeth into the ground.

2 - Lower the blade to the ground.

3 - Engage the safety lock of the boom swing control, of the optional equipment control and of the upper structure rotation and shift the safety device lever to the lock position.

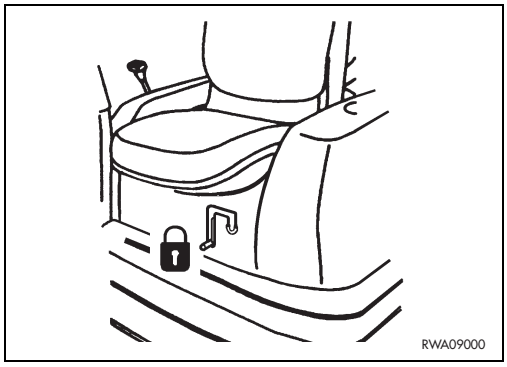

4 - Stop the engine following the procedure indicated in paragraph “3.8 STOPPING THE ENGINE”.

5 - Leave the driving position using the tracks and the handles.

6 - Put wedges under the tracks.

7 - Refuel, taking the necessary precautions.

8 - Remove the ignition key and lock the cab, if provided.

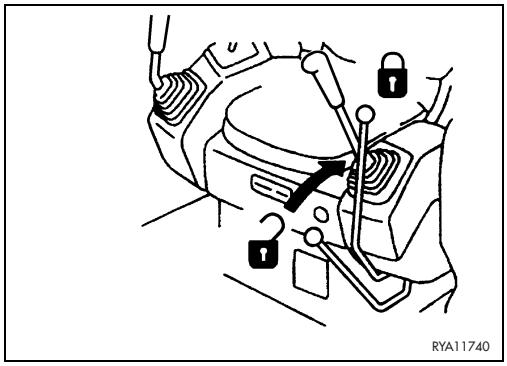

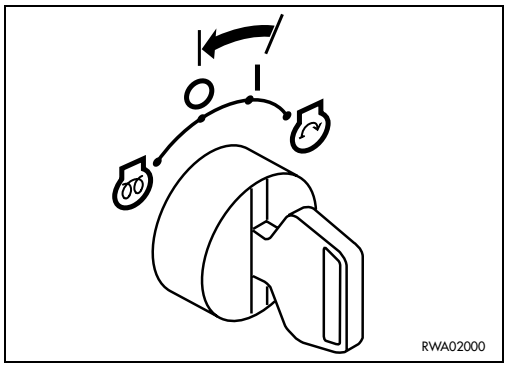

Downloaded from www.Manualslib.com manuals search engine

https://truckmanualshub.com/

3.8 STOPPING THE ENGINE

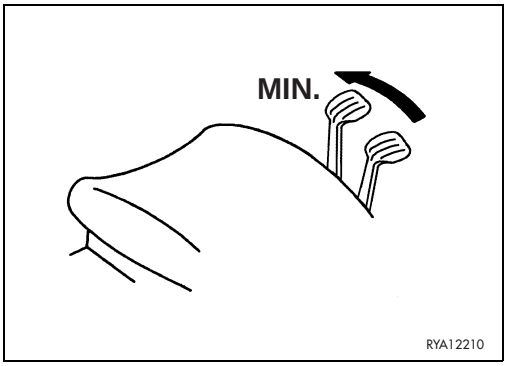

IMPORTANT

- **The sudden stop of the engine while it is running shortens its life. Do not stop the engine suddenly, except in case of emergency.**
- **It is likewise recommended not to stop the engine suddenly if it has been running for a long period and is still hot; in this case, let the engine idle for about 5 minutes, in order to allow it to cool down gradually before stopping it.**

Before stopping the engine, proceed as follows:

1 - Rest the work equipment onto the ground.

2 - Shift the levers to the neutral position and connect the safety devices.

3 - Shift the accelerator lever to the idling position.

Stop the engine by turning the ignition key to position «**O**» (OFF).

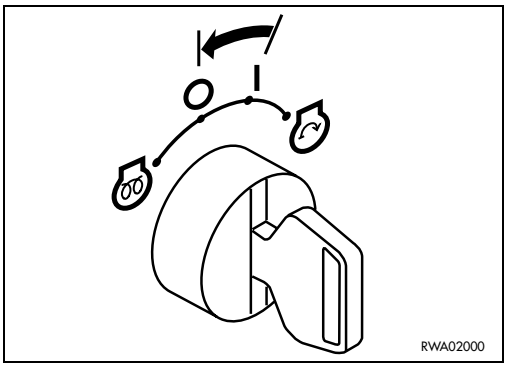

Downloaded from www.Manualslib.com manuals search engine

https://truckmanualshub.com/

3.9 TRANSPORTING THE MACHINE ON MOTOR VEHICLES

3.9.1 LOADING AND UNLOADING THE MACHINE

DANGER

- **The loading and unloading of the machine on/from the means of transport must be carried out on a flat surface and at a safety distance from the edges of ditches or from the road side.**
- **Block the means of transport by positioning wedges before and behind each wheel.**
- **Make sure that the ramps are sufficiently strong; if necessary, reinforce them with blocks, in order to prevent any dangerous bending.**
- **Make sure that the ramps have the same length, are firmly anchored to the motor vehicle, are parallel to each other and perpendicular to the loading board; the distance between the ramps must be suitable for the machine gauge.**
- **Position the ramps with a maximum inclination of 15°.**
- **Remove any trace of oil, grease or ice from the ramps and the loading board.**
- **Do not change direction when the machine is already on the ramps; if necessary, go down and find the correct direction.**

1 - The machine must get on the ramps with the bucket (1) directed forward and raised from the ground.

2 - Once the machine has been loaded, rotate the upper structure by 180° and engage the antirotation lock, lower the blade (2) and the work equipment to the ground and shift the safety device lever to the lock position.

3 - Stop the engine and remove the ignition key.

4 - Keep the machine in position also by putting wedges (3) before and behind the tracks.

5 - Fix the machine with tie-downs or chains (4) in the anchorage points (6).

6 - Protect the end of the exhaust pipe (5).

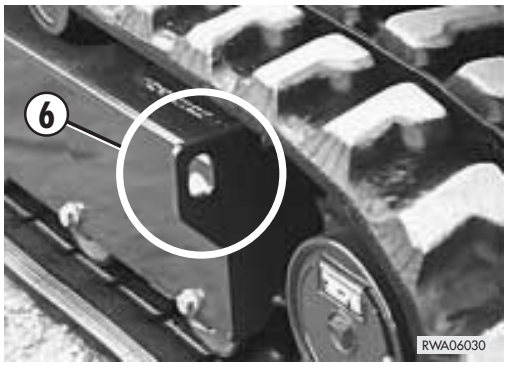

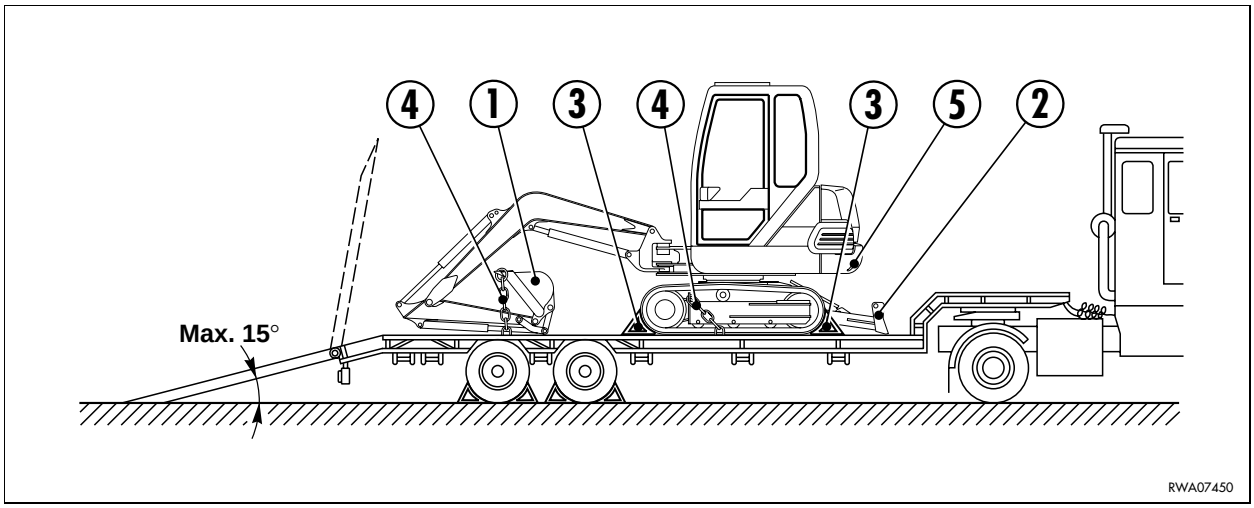

Downloaded from www.Manualslib.com manuals search engine

https://truckmanualshub.com/

3.9.2 TRANSPORT

1 - Check the overall dimensions; the height, width and weight of the means of transport - machine included - must be compatible with the road and any tunnel, subway, bridge, electric or telephone line that may be found on the way.

2 - Keep to the regulations in force regarding signals, speed limits, road traffic, authorizations, etc.

Downloaded from www.Manualslib.com manuals search engine

https://truckmanualshub.com/

3.10 LIFTING THE MACHINE

DANGER

- **To lift the machine, the cables and the upper lifting bar used must be properly sized; do not use worn cables or cables with broken strands.**
- **Do not lift the machine before the operator has got off and make sure that there is no one around before lifting it.**

Lift the machine by proceeding as follows.

1 - Rotate the upper structure so that the blade is behind the operator and raise the blade completely.
Extend the bucket, boom and arm cylinders completely and make sure that the control levers are in neutral.

2 - Swing the boom to the central position and engage the control pedal safety device.

3 - Shift the safety device lever to the lock position and stop the engine.

4 - Insert a metal or nylon rope in the two holes provided on the blade ends and in the boom hole. Fix the ropes with appropriate locks or safety pins.

5 - Connect the ropes to the upper lifting bar as indicated in the figure.

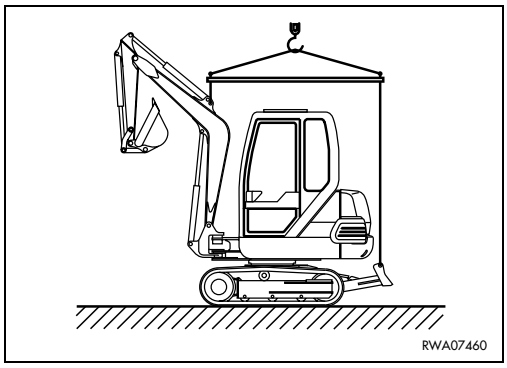

IMPORTANT

- **Always use the three coupling points provided for the lifting operations.**

6 - Lift the machine slowly until the ropes are stretched and make sure that the fastenings are correct before lifting the machine definitively.

CAUTION

- **When lifting the machine, make sure that it is correctly balanced and that it remains in horizontal position during the lifting operations.**
- **Do not lift the machine with swung boom or without using the lifting bar.**

Downloaded from www.Manualslib.com manuals search engine

https://truckmanualshub.com/

3.11 PRECAUTIONS TO BE TAKEN IN THE COLD SEASON

During the cold season or in areas where the temperature is particularly low, especially during the night, it is necessary to take some countermeasures meant to limit the damage deriving from low temperatures.

3.11.1 FUEL AND LUBRICANTS

1 - Change the fuel and use the winter fuel ASTM D975 N. 1.

2 - Change the engine oil with an oil with suitable viscosity.
For the relevant specifications, see “4.3 FUEL, COOLANT AND LUBRICANTS”.

3.11.2 COOLANT

DANGER

- **The coolant containing antifreeze is flammable; do not smoke and do not use naked flames during the checks and when preparing the mixture.**
- **Do not use methanol-, ethanol- or propanol-based antifreezes.**

---

1 - If no permanent antifreeze is available, use an antifreeze mixture made of ethylene glycol added to anticorrosion and antifoam products.
Use this mixture only during the winter and when changing the coolant (in autumn or spring) wash the cooling circuit (see “4.7.1 WHEN REQUIRED”).

2 - When it is necessary to calculate the antifreeze-water ratio, refer to the lowest temperature measured in the past and consider a temperature 10° C lower than that. (See “4.2.1.2 COOLANT”).

3 - Do not use plugging additives, either alone or added to the antifreeze, to eliminate leakages.

4 - Do not mix antifreezes of different brands.

5 - If a permanent antifreeze is used during the year, it is not necessary to change it and to wash the circuit.

6 - The required standards for the permanent antifreeze are SAE-J1034 and FEDERAL STANDARD O-A-548D.
In case of doubt regarding the compliance of the antifreeze used with the standards, contact the manufacturer and ask for precise information.

3.11.3 BATTERY

DANGER

- **To avoid explosions due to the presence of gas, do not provoke sparks and do not use naked flames near the battery.**
- **The battery electrolyte is dangerous. If it comes in contact with the eyes or the skin, immediately rinse with plenty of water and consult a doctor without delay.**

Downloaded from www.Manualslib.com manuals search engine

https://truckmanualshub.com/

1 - When the ambient temperature decreases, the battery capacity decreases accordingly and, if the battery charge is low, the electrolyte may freeze.
Keep the battery completely charged and insulate it to protect it against low temperatures, so that the machine can be started without problems the following day.

2 - Measure the specific weight of the fluid and check the battery charge percentage, making reference to the following table:

CHARGE PERCENTAGE	FLUID TEMPERATURE			
	20°C	0°C	-10°C	-20°C
100%	1.28	1.29	1.30	1.31
90%	1.26	1.27	1.28	1.29
80%	1.24	1.25	1.26	1.27
75%	1.23	1.24	1.25	1.26

3 - When the electrolyte level is low, add distilled water before starting work, rather than after work, in order to prevent the fluid from freezing during the night.

3.11.4 OTHER PRECAUTIONS

1 - Before using the machine in normal operating conditions, carry out some slow movements either forward and in reverse, and operate all the work equipment cylinders slowly more than once.
These operations serve to warm up and fluidize the oil in the hydraulic circuit and the reduction gears.

3.11.5 PRECAUTIONS TO BE TAKEN AT THE END OF WORK

1 - Completely remove mud and water from the machine body.
Park the machine on firm ground; if the machine must be parked near banks or ditches, park it on wooden boards in order to distribute the weight of the machine on a larger surface.

2 - Be careful to water drops forming on the hydraulic cylinder rods: these drops must be completely removed, since if they freeze the cylinder gaskets may be damaged.
After removing the water drops, protect the rods with oil.

3 - Drain the condensate that may have formed in the tank, to prevent the water from freezing during the night.

4 - Since the battery capacity may decrease considerably at low temperatures, after work cover the battery or remove it and store it at a suitable temperature.

Downloaded from www.Manualslib.com manuals search engine

https://truckmanualshub.com/

3.12 PRECAUTIONS TO BE TAKEN IN THE WARM SEASON

1 - At the end of the cold season, change the lubricants, the coolant and the fuel.

☞ **IMPORTANT**

- **The coolant must be changed only if it is not permanent.**
  For the relevant specifications, see “4.3 FUEL, COOLANT AND LUBRICANTS”.

2 - Make sure that the cooling fan belt is in good conditions.

3 - Make sure that the fins of the radiator and of the heat exchanger are clean.

4 - Check the radiator cap gasket and spring; in case of doubt regarding tightness and setting, change the cap.

Downloaded from www.Manualslib.com manuals search engine

https://truckmanualshub.com/

3.13 USING THE WORK EQUIPMENT

DANGER

- **Always fasten the safety belt before any manoeuvre.**
- **Before starting work, warn the persons in the vicinity by means of the horn positioned on the right lever.**
- **If due to a sudden failure the machine stops with raised equipment, turn the ignition key to position «I», release the safety device, gradually operate the boom lowering control lever until the bucket rests on the ground and release any residual pressure.**

IMPORTANT

- **The basic illustrations shown are those necessary for a correct use and exploitment of the machine; the operator must get to know the controls, the described operating method and learn how to organize work in a free area while seated in the driving position.**

3.13.1 ORGANIZING THE WORK AREA

If after a first inspection the area results to be uneven, encumbered with big obstacles or characterized by considerable height differences, it is advisable to level the ground as much as possible before starting work, both for the machine and for the vehicles to be loaded.
These preliminary operations will make work quicker, ensure better results and at the same time reduce the operator's stress and the straining of the machine components; furthermore, this will considerably reduce the time necessary to carry out the excavation or to load the trucks destined to the transport of the material.

Downloaded from www.Manualslib.com manuals search engine

https://truckmanualshub.com/

3.13.2 POSITIONING THE MACHINE FOR DIGGING OPERATIONS

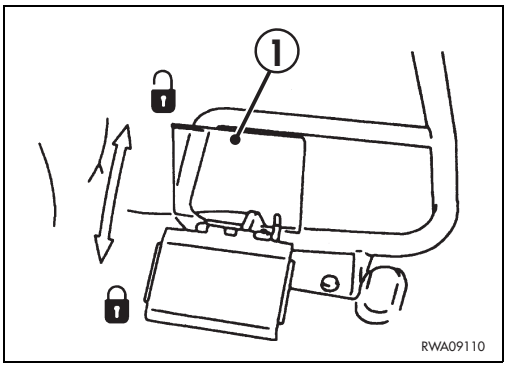

DANGER

- **Before moving the equipment, make sure that no one is standing in the work area.**
- **Carry out all the possible movements and make sure that the control levers work properly.**
- **If visibility is not perfect or there are ducts or lines of any kind, work at reduced speed and ask the assistance of another operator.**

1 - Center the machine with respect to the digging line.

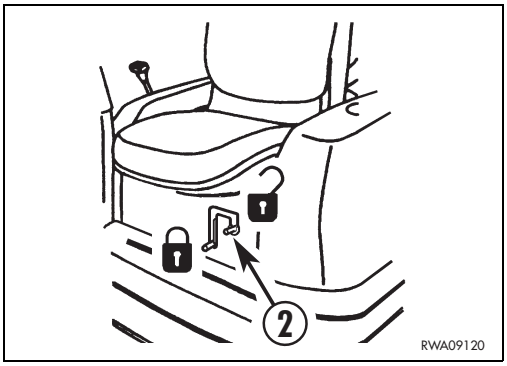

IMPORTANT

- **If this is not possible, because it is necessary to dig along walls or banks, swing the boom sidewards and position the machine beside the point where the excavation must be carried out.**

2 - Release the boom swing from the safety lock (1) and release the upper structure rotation by lifting the antirotation pin (2).

3 - Fasten the safety belt and accelerate until reaching a medium speed.

4 - Shift the safety device lever (3) to the release position and start work.

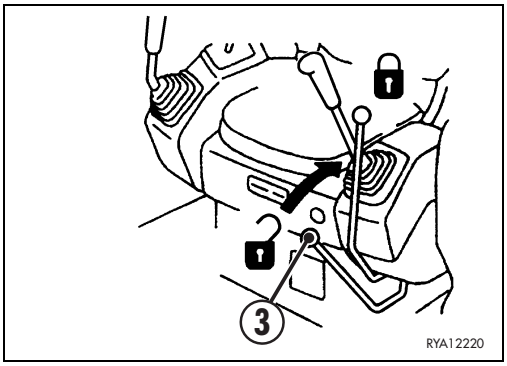

Downloaded from www.Manualslib.com manuals search engine

https://truckmanualshub.com/

3.13.3 DIGGING METHOD

DANGER

- **The geometry of the rotation fulcrum of the arms and the bucket make it possible to dig even beyond the stabilizer line, which makes the ground give way. Do not dig beyond the boom fulcrum line, since the ground may collapse and cause the machine to overturn.**

1 - At the beginning of work, keep the bucket at the correct penetration angle.

2 - Once the desired digging depth has been reached, position the bucket with its back parallel to bottom of the excavation and then start filling.

3 - During the collection phase, make the bucket, the boom and the arm move simultaneously; combined movements facilitate the filling of the bucket and therefore increase productivity.

4 - he removal depth must be correct and suitable for the type of ground; excessive depth may lock the movements, overload the engine and the pump and slow down the digging operations.

5 - To dump on heaps, dump the bucket as soon as it gets near the dumping area; the inertia resulting from the movement will ensure the compaction of the material with no need to use the bucket for this purpose, which avoids impacts and vibrations that facilitate the wear of pins and bushings.

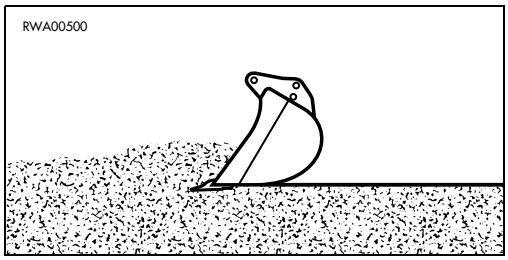

CORRECT
The bucket works with its flat surface parallel to the ground.

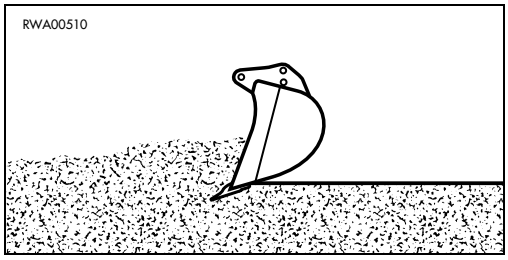

INCORRECT
The bucket is thrusted downwards, slowing down the digging work.

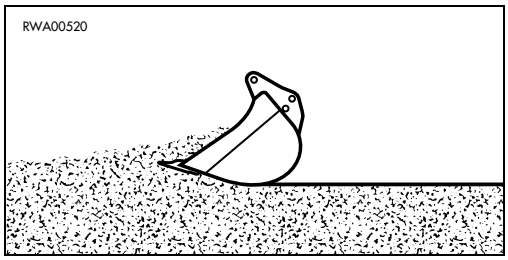

INCORRECT
The bucket is pushed upwards and therefore is not filled completely.

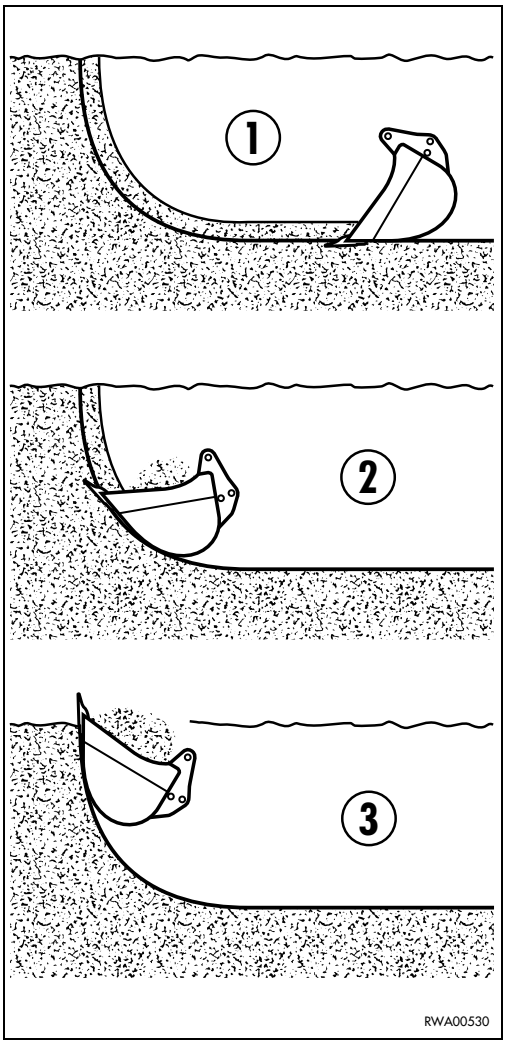

CORRECT DIGGING METHOD
(Sequence 1 - 2 - 3)

Downloaded from www.Manualslib.com manuals search engine

https://truckmanualshub.com/

3.13.4 CHANGING THE BUCKET

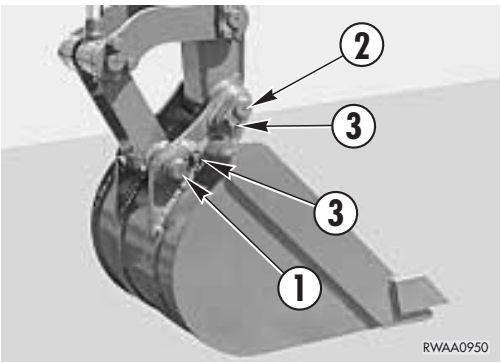

DANGER

- **When the coupling pins are removed or installed, chips may come off; always use gloves, goggles and helmet.**
- **The change of the equipment must be carried out by two persons, who must decide together the words and signals to use during operations.**
- **Do not use your fingers to center the holes, since they may be injured or even cut in case of sudden or uncontrolled movements.**
- **The described procedures are valid also for the coupling of the mechanical constraints of the optional equipment.**

1 - Position the bucket on a level surface, directing it so that the flat part of its back rests on the ground.

2 - Remove the tie rod pin (1) and the arm connection pin (2).

3 - Change the bucket, taking care to clean the pins, the bushings and the seals perfectly and to grease the pins slightly before reinstalling them.

IMPORTANT

- **Install first the arm connection pin, making sure that the seals are in good conditions.**

4 - Put back all the safety pins (3) and lubricate by means of the appropriate grease nipple.

Downloaded from www.Manualslib.com manuals search engine

https://truckmanualshub.com/

3.14 LONG PERIODS OF INACTIVITY

3.14.1 BEFORE THE PERIOD OF INACTIVITY

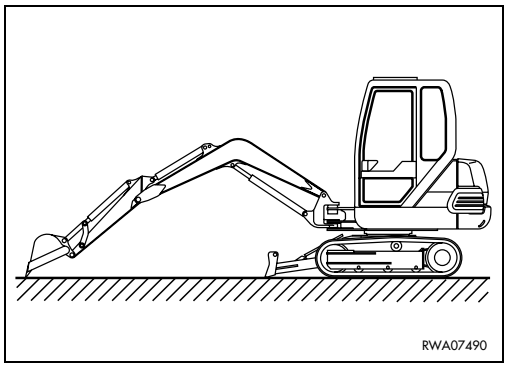

DANGER

- **When draining the fuel, do not smoke or bring naked flames near the machine.**
  Place a container under the machine to gather the fuel and prevent it from spreading around.
  If some fuel is spilt, clean the dirty surface immediately.

IMPORTANT

- **To protect the cylinder rods when the machine is not used, position the work equipment as shown in the figure. (This serves to prevent the cylinder rods from rusting).**

If the machine must be stored for a long period of inactivity, it is advisable to put it in a sheltered place and to take the following precautions, in order to keep all its components sound and efficient:

1 - Clean the machine thoroughly, repainting it where necessary in order to prevent oxidation.
2 - Drain and change all the fluids of the hydraulic circuits and the lubricants (engine and reduction gears), following the maintenance rules.
3 - Change all the filtering elements (air cleaner, engine oil filter, hydraulic circuit filters, diesel oil filter).
4 - Drain the coolant and replace it with a corrosion inhibitor (permanent fluid).
5 - Drain the normal fuel and fill the tank with at least 5 liters of special washing and protecting fuel.
6 - Let the engine run for about 10 minutes, in such a way as to eliminate the residual normal fuel from the filters, the injection pump and the entire fuel supply system. This operation avoids the locking of the injection pump and the injectors.
Stop the engine and refuel with normal diesel oil.
7 - Remove the battery, check the electrolyte level and make sure that the battery charge is sufficient.
Store the battery in a room with suitable temperature and periodically recharge it.
8 - Grease the hydraulic cylinder rods and the equipment joints.
9 - Seal the end of the exhaust pipe and the fuel tank cap.
10 - Move the machine controls to the neutral position and engage all the safety locks.
11 - Hang a warning notice on the controls to indicate the condition of the machine.
12 - Lock the fuel tank cap, the engine hood and, if provided, the cab door.

Downloaded from www.Manualslib.com manuals search engine

https://truckmanualshub.com/

3.14.2 DURING THE PERIOD OF INACTIVITY

DANGER

- **If it is necessary to carry out a rust-prevention treatment while the machine is kept indoors, open doors and windows to increase ventilation and avoid poisoning by gas.**

Start the engine and move the machine for a short distance once a month, so that a new oil film covers all the moving parts and the surfaces of the components. Provide also for charging the battery.

3.14.3 AFTER THE PERIOD OF INACTIVITY

IMPORTANT

- **If the machine is stored without carrying out the monthly rust-prevention treatment, have maintenance performed by your Komatsu Utility Dealer.**

When using the machine after a long period of inactivity, proceed as follows.

1 - Release the exhaust pipe and the fuel tank from the seals.
2 - Check all the levels (engine oil, coolant, fuel, hydraulic circuit oil).
3 - Make sure that the battery is charged and install it on the machine.
4 - Disconnect the engine stop solenoid.
5 - Turn the ignition key directly to the start position and keep it there until the engine oil pressure warning light goes out.
This operation serves to restore the lubricating oil circulation and to carry out a first lubrication cycle.
6 - Reconnect the engine stop solenoid and start the engine.
7 - Start the engine and let it idle for about 20 minutes.
8 - While the engine is warming up, remove the protection grease from the hydraulic cylinder rods.
9 - Before moving the machine, make sure that the instruments, warning lights and working lights operate correctly.
10 - Warm the hydraulic cylinders as soon as possible, by slowly moving all the equipment.

Downloaded from www.Manualslib.com manuals search engine

https://truckmanualshub.com/

3.15 TROUBLESHOOTING

3.15.1 OCCURRENCES THAT ARE NOT FAILURES

The following occurrences are not failures:

1 - When the boom is retracted, the movement speed decreases temporarily, according to the position of the boom (more or less vertical.

2 - The boom speed decreases temporarily according to the position of the bucket teeth (more or less horizontal).

3 - When travelling down a steep slope at low speed, a noise coming from the travel motor may be heard.

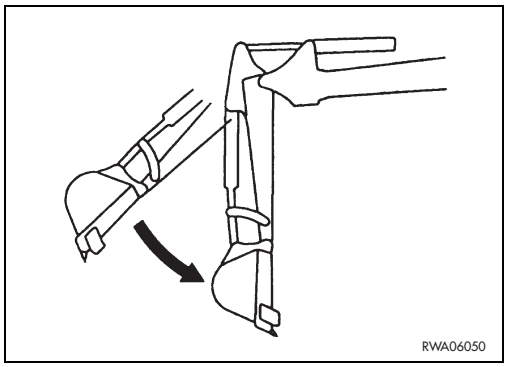

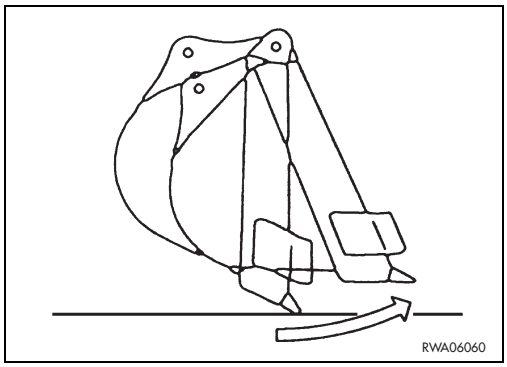

3.15.2 HOW TO REMOVE THE MACHINE

DANGER

- **When removing the machine, use a wire rope suitable for the weight of the machine to be removed.**

If the machine gets stuck in mud and cannot get out using only its motive power, or in case of breakdown, use a wire rope as shown in the figure on the right.
Place wooden blocks between the wire rope and the machine body, in order to avoid damaging the rope and the machine.

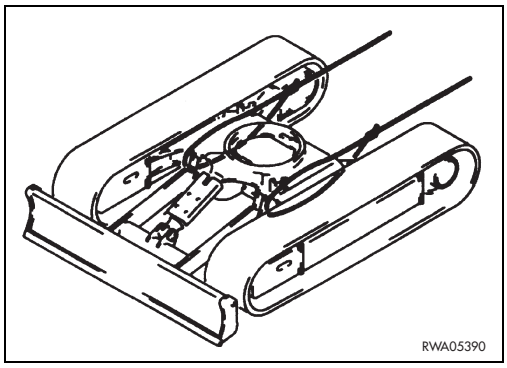

Downloaded from www.Manualslib.com manuals search engine

https://truckmanualshub.com/

3.15.3 AFTER THE FUEL HAS RUN OUT

Before starting the engine, when the fuel has run out and therefore air has entered the fuel supply circuit, it is necessary to bleed the fuel supply circuit.
For the necessary operations, see “4.7.9 MAINTENANCE EVERY 500 HOURS OF OPERATION”.

3.15.4 IF THE BATTERY IS DOWN

DANGER

- **When checking or carrying out any operation on the battery, stop the engine and make sure that the ignition key is in position «O».**
- **The battery produces hydrogen, which may explode. Do not use naked flames and do not smoke near the battery, and avoid producing sparks.**
- **The battery electrolyte is made of diluted sulphuric acid that may corrode the clothes and even the skin; in case of contact with this fluid, immediately rinse the involved part with plenty of water.**
  If the acid gets into the eyes, immediately rinse with plenty of water and consult a doctor without delay.
- **When working on the battery, always wear goggles and gloves.**
- **When removing the battery, disconnect first the earth cable (–); when installing the battery, connect first the positive cable (+).**
- **If a tool comes into contact with the positive terminal and with the machine structure at the same time, this may generate sparks with consequent risk of explosion.**
- **Carefully tighten the connection terminals, since false contacts may generate sparks with consequent risk of explosion.**

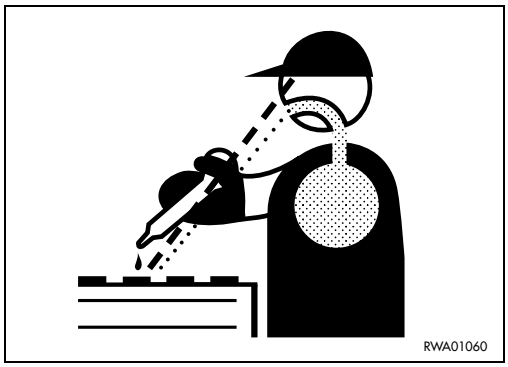

REMOVAL

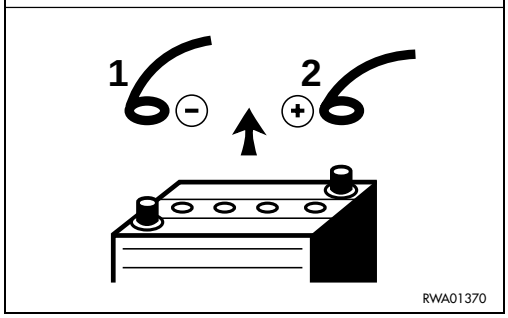

INSTALLATION

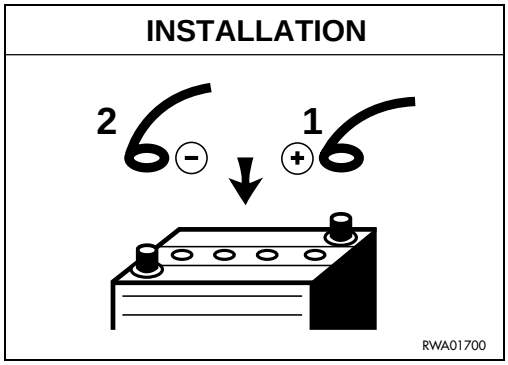

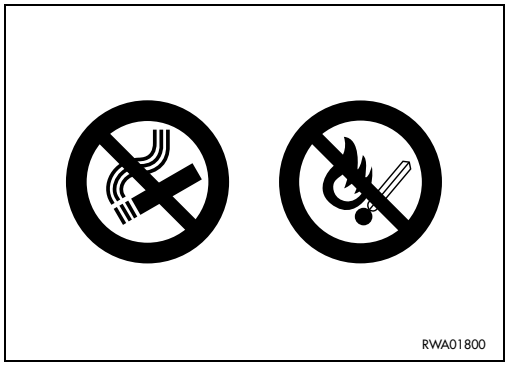

Downloaded from www.Manualslib.com manuals search engine

https://truckmanualshub.com/

3.15.4.1 STARTING WITH BOOSTER CABLES

DANGER

- **When starting the engine with the aid of another machine, connect the batteries in parallel.**
- **When connecting the cables, avoid any contact between the positive cable (+) and the negative cable (–).**
- **When starting the engine with booster cables, always wear safety goggles.**
- **Take care to avoid any contact between the machine to be started and the machine used as starting aid, in order to avoid sparks and therefore the explosion of the hydrogen produced by the batteries. The explosion of the battery causes serious damage and injuries.**
- **Take care not to invert the cables and connect the earth cable (–) last, as far from the battery as possible.**
- **Remove the cables with great care; prevent the cables disconnected from the battery from touching other parts of the machine, in order to avoid the explosion of the hydrogen.**

IMPORTANT

- **The cables and pliers must be suitable for the current load that must be transferred.**
- **The battery to be used for the starting must have greater capacity or at least the same capacity as the battery of the machine to be started.**
- **Make sure that the cables and pliers are neither corroded, nor damaged.**
- **Make sure that the pliers hold the terminals firmly.**

CONNECTING THE CABLES AND STARTING THE ENGINE

1 - Make sure that the ignition key is in position «O».

2 - Connect the positive poles (+) of the two batteries with each other (A).

3 - Connect the cable of the negative terminal (–) of the charged battery to the earth block of the machine to be started (B).

4 - Start the engine of the machine that supplies current and increase its speed.

5 - Start the engine of the machine that does not work. (See “3.6.2 STARTING THE ENGINE”).

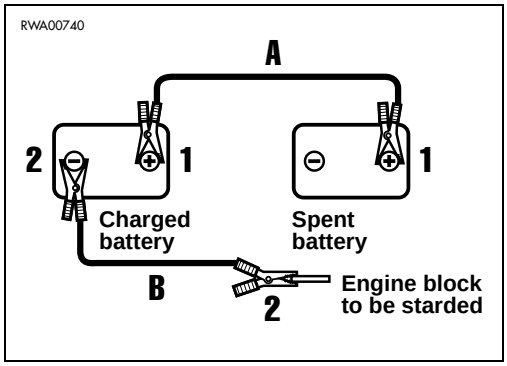

REMOVING THE CABLES

When the engine has started, remove the cables in the reverse order with respect to their connection.

1 - Disconnect the negative cable (–) from the earth block of the engine that has been started and then from the battery (B).

2 - Disconnect the positive cable (+) first from the battery used for the starting and then from the exhausted battery (A).

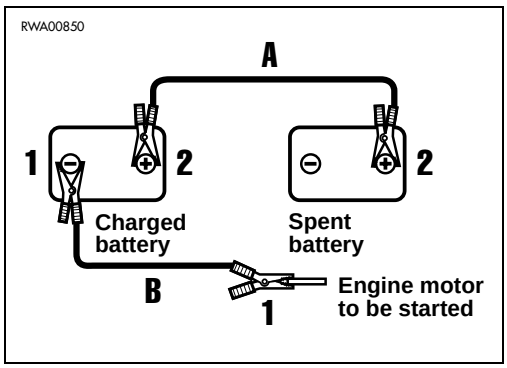

Downloaded from www.Manualslib.com manuals search engine

https://truckmanualshub.com/

3.15.5 OTHER TROUBLES

(•): Always contact your Komatsu Utility Dealer when you have to carry out this operation.

• : If the anomaly or its cause are not included in the failures indicated below, contact your Komatsu Utility Dealer for the necessary repair.

3.15.5.1 ELECTRICAL CIRCUIT

TROUBLE	CAUSE	REMEDY
Lights do not work satisfactorily even with engine running at high speed:	• Faulty cables. • Faulty fan belt tension.	(•) Check and repair any loose terminal and connection. • Adjust fan tension (see “EVERY 250 HOURS”).
Lights come on intermittently with engine running:		
Alternator charge warning light does not go out with engine running and increasing speed:	• Faulty alternator. • Faulty cables.	(•) Change. (•) Check and repair.
Alternator emits an abnormal noise:	• Faulty alternator.	(•) Change.
Starter does not turn with key in START position:	• Faulty cables. • Battery charge insufficient. • Faulty main fuse.	(•) Check and repair. • Charge battery. • Change.
Starter pinion engages and then disengages:	• Battery charge insufficient.	• Charge battery.
Starter makes engine run slowly:	• Battery charge insufficient. • Faulty starter.	• Charge battery. (•) Change.
Starter disengages before engine has started:	• Faulty cables. • Battery charge insufficient.	(•) Check and repair. • Charge battery.
Engine oil pressure warning light does not come on when engine is stopped (ignition key in position «I»):	• Faulty bulb. • Faulty pressure sensor.	(•) Change. (•) Change.
Alternator charge warning light does not come on when engine is stopped (ignition key in position «I»):	• Faulty bulb. • Faulty cables.	(•) Change. (•) Check and repair.

3.15.5.2 HYDRAULIC SYSTEM

TROUBLE	CAUSE	REMEDY
Pump emits an abnormal noise:	• No oil in the tank. • Faulty pump. • Hydraulic oil unsuitable for the temperature.	• Top up. (•) Repair or change. • Change.
Equipment control levers do not return automatically to neutral position:	• Broken return spring or seized element.	(•) Change spring or distributor element.
Equipment moves only at low speed:	• Faulty pump. • Max. pressure valve setting incorrect, or valves not closed due to impurities. • Dirty drain filter.	(•) Repair or change. (•) Set or change. • Change.

Downloaded from www.Manualslib.com manuals search engine

https://truckmanualshub.com/

3.15.5.3 ENGINE

TROUBLE	CAUSE	REMEDY
Oil pressure warning light remains on even with engine at high speed:	• Oil level in oil pan too low. • Oil filter clogged. • Oil unsuitable for the season.	• Top up. • Change filter. • Change.
Steam comes out of radiator breather pipe: Engine coolant temperature indicator enters the red overheating field:	• Fluid level low, fluid leakages. • Fan belt slackened. • Mud or limestone accumulated in cooling system. • Radiator fins damaged or closed. • Faulty thermostat. • Radiator cap loose or broken. Working at considerable altitude.	• Top up, repair. • Check belt tension. • Change fluid and clean cooling system. • Repair or clean. (•) Change. • Tighten cap or change unit.
Engine coolant temperature indicator always on the right end of the scale:	• Faulty instrument.	(•) Change.
Engine coolant temperature indicator always on the left end of the scale:	• Faulty thermostat. • Faulty instrument.	(•) Change. (•) Change.
Engine does not start with starter running:	• No fuel. • Air in fuel system. • Compression defect (valves with wrong clearance).	• Refuel. • Bleed system. (•) Adjust valve clearance.
Exhaust gases white or light blue:	• Too much oil in oil pan. • Unsuitable fuel.	• Correct oil level. • Change with suitable fuel.
Exhaust gases occasionally tend to be black:	• Air cleaner clogged. • Faulty injectors. • Faulty compression.	• Clean or change. (•) Change. (•) Adjust valve clearance.
Combustion noise occasionally resembles a blow:	• Faulty injectors.	(•) Change.
Abnormal noises (during combustion or in mechanical parts):	• Fuel with low cetane rating. • Overheating. • Exhaust silencer inside damaged. • Excessive valve clearance.	• Change with fuel in compliance with standards. • See “defects of temperature indicator”. (•) Change. (•) Adjust valve clearance.

Downloaded from www.Manualslib.com manuals search engine

https://truckmanualshub.com/

Downloaded from www.Manualslib.com manuals search engine

https://truckmanualshub.com/

MAINTENANCE

Downloaded from www.Manualslib.com manuals search engine

https://truckmanualshub.com/

4.1 GUIDE TO MAINTENANCE

- Before opening the engine hood, engage all the safety locks and stop the engine.
- If it is necessary to check the oil level in the hydraulic tank, retract the bucket and arm cylinders completely and lower the bucket teeth to the ground.
- Carry out any operation on firm and level ground.
- Use Komatsu Utility genuine oils and greases; choose oils suitable for the ambient temperature.
- Use clean oils and greases. Keep the oil and grease containers clean. Keep any foreign matter away from oils and greases.
- Always keep the machine clean. This makes it easier to find out any part causing troubles.
  In particular, keep the grease nipples, the breathers and the areas near the openings for the level checks clean and prevent any impurities from getting into/on them.
- Draining hot oil or coolant immediately after stopping the engine is hazardous. Wait for the engine to cool down until reaching at least 40÷50° C.
- When changing the oils or the filters, check if metal particles are present. If you find large quantities of metal particles, contact your Komatsu Utility Dealer.
- Check and change the oil in a clean place and prevent any impurities from getting into the tank.
- Before carrying out any maintenance operation, hang the warning plates on the ignition switch, the control levers and the cab door, if the machine is provided with cab, in order to prevent anyone from starting the engine by mistake.
- When performing maintenance operations, always take the precautions indicated on the safety plates applied onto the machine.
- Instructions for arc welding.
  1 - Turn the ignition key to position «O».
  2 - Disconnect the battery (first the negative pole and then the positive pole).
  3 - Disconnect the alternator.
  4 - Do not apply more than 200V continuously.
  5 - Connect the earth cable within 1 m from the point in which the welding must be carried out.
  6 - Avoid placing gaskets and bearings between the welding area and the earth cable.
- Do not use flammable fluids to clean the machine parts. Keep naked flames or lit cigarettes away from these fluids.
- When O-rings and gaskets are removed, clean the sealing surfaces thoroughly and replace the O-rings and gaskets with new ones. Fit the O-rings and gaskets correctly when reassembling.
- Avoid keeping loose objects or tools in your pockets: they may fall out and drop into the machine, especially when you open covers and work on the machine while bending over it.
- When washing the machine, do not direct the high-pressure water jet onto the radiator and the heat exchanger.
- When washing the machine, protect the electric system connectors and avoid wetting the ignition switch.
- Before starting work in mud, under the rain, on seashores or river banks, carry out a general lubrication.
  Wash the machine immediately after work to protect the components from rust. Lubricate the equipment joints more frequently than usual.
- When working at dusty work sites, proceed as follows:
  1 - Check the air cleaner for any clogging and clean it more frequently than usual.
  2 - Clean the radiator and the heat exchanger frequently, to avoid any clogging of the fins.
  3 - Change the diesel oil filter more frequently than usual.
  4 - Clean the electrical components, especially the starter and the alternator, to avoid any accumulation of dust.

Downloaded from www.Manualslib.com manuals search engine

https://truckmanualshub.com/

- Never mix oils of different brands.
  Do not top up with any oil different from the oil used in the machine. If necessary, drain all the oil and fill the tank with the oil of the new brand.

DANGER

- **Oils, filters, the coolant and the battery are considered special waste and must be collected and disposed of according to the regulations in force.**
- **The combustible material of some components may become extremely dangerous if it burns. For this reason, avoid any contact of burnt material with your skin or eyes and do not inhale the fumes.**

Downloaded from www.Manualslib.com manuals search engine

https://truckmanualshub.com/

4.2 MAINTENANCE NOTES

- Use only Komatsu Utility genuine spare parts.
- Do not mix different types of oil.
- Unless specified otherwise, the oils and the coolant used by Komatsu Utility to fill the tanks before the delivery of the machine are the following:

ITEM	SPECIFICATIONS
• Engine oil	SAE 15W-30 API classification CD
• Hydraulic system oil	SAE 10W API classification CD
• Biodegradable hydraulic system oil (Only for machines in which the synthetic biodegradable oil type HEES not of plant origin is used)	SHELL NATURELLE HFX-32
• Travel reduction gear oil	SAE 10W API classification CD
• Swing reduction gear oil (for PC27R only)	SAE 10W API classification CD
• Fuel	With ambient temperature over –10° C: ASTM D975 no. 2 diesel oil
	With ambient temperature under – 10°C: ASTM D975 no. 1 diesel oil
• Radiator	Permanent, ethylene glycol-based antifreeze, with corrosion inhibitor for protection up to -36°C

4.2.1 NOTES REGARDING THE ENGINE

4.2.1.1 ENGINE OIL

- The engine oil must be selected very carefully, since it lubricates the engine, which is the machine's heart; the main maintenance operations required for the engine oil are the following:

  1 - daily check of the oil level;

  2 - check of the oil pollution degree;

  3 - periodical change.

4.2.1.2 COOLANT

- The coolant serves to keep the engine at the correct temperature and therefore to ensure optimal operating conditions; check the coolant level in the expansion tank daily and top up if necessary.
- The coolant containing antifreeze is flammable; do not use naked flames near the coolant and do not smoke while topping up.

Downloaded from www.Manualslib.com manuals search engine

https://truckmanualshub.com/

- The quantity of antifreeze to be added to the coolant depends on the minimum temperatures in the place where the machine is used.
  Keep to the following reference table:

QUANTITY OF ANTIFREEZE TO BE ADDED TO THE WATER

Minimum ambient temperature	(°C)	-4	-6	-9	-12	-16	-20	-26	-32	-36
	(°F)	24.8	21.2	15.8	10.4	3.2	-4	-14.8	-25.6	-32.8
Quantity of antifreeze	(l)	0.4	0.6	0.8	1.0	1.2	1.4	1.6	1.8	2
	(US gal)	0.10	0.15	0.21	0.26	0.31	0.36	0.42	0.47	0.52
Quantity of water	(l)	3.6	3.4	3.2	3.0	2.8	2.6	2.4	2.2	2
	(US gal)	0.95	0.89	0.84	0.79	0.73	0.68	0.63	0.58	0.52

- Use drinkable water and in any case soft water.
- Do not use corrosion inhibitors containing soluble oil, since they damage the rubber couplings.
- In case of doubt, contact your Komatsu Utility Dealer.

4.2.1.3 FUEL

- Always use fuel suitable for the engine. Other fuels with different specifications may damage the engine or reduce its power.
- Always refuel at the end of the work day.
- When refuelling, make sure that there is no water on the fuel drum cover and take care not to draw the condensate from the drum bottom.
- If fuel runs out, or if the fuel filter has been replaced, it is necessary to bleed the circuit.

4.2.2 NOTES REGARDING THE HYDRAULIC SYSTEM

- Be extremely careful when performing maintenance operations on the hydraulic system, since soon after work the oil is very hot.
  The circuit is pressurized not only during work, but also at the end of work.
- The maintenance operations required for the hydraulic system are the following:
  1 - daily check of the oil level in the tank;
  2 - periodical change of the oil filter;
  3 - periodical change of the oil.
- Always bleed the circuit after changing the oil filter or the oil.
- When a component is removed from the circuit, check the gaskets and O-rings and change them if they are damaged.
- When a cylinder or a component of the hydraulic circuit is removed, after reassembly bleed the circuit by proceeding as follows:
  1 - start the engine and let it idle;
  2 - make all the cylinders perform 4-5 movements, stopping them at approx. 100 mm from the end of their stroke;
  3 - slowly make all the cylinders reach the end of their stroke for 3-4 times.

Downloaded from www.Manualslib.com manuals search engine

https://truckmanualshub.com/

4.2.3 NOTES REGARDING THE ELECTRICAL SYSTEM

- If the cables are wet or their insulating material is damaged, the electrical system leaks and this may result in malfunctions of the machine.
- The maintenance operations required for the electrical system are the following:
  1 - check of the alternator belt tension;
  2 - check of the alternator belt for damage or breakages;
  3 - check of the battery electrolyte level.
- Do not remove or eliminate any electric component installed on the machine and do not install any electric component with characteristics different from those specified and approved by Komatsu Utility.
- Be careful to keep the electric system dry.
- When working on seashores or river or lake banks, protect the jack plugs from corrosion.
- Do not connect any optional device to the fuses, ignition switch, battery, relays, etc.; for the installation of any optional equipment, contact your Komatsu Utility Dealer.
- If any electric welding operation has to be carried out, disconnect the battery and the alternator.

4.2.4 NOTES REGARDING LUBRICATION

- Lubrication makes the operations carried out with the machine and work equipment smoother, while preventing wear and the noise that may be produced if the articulations are dry.
  Lubrication is to be carried out with grease or oil.
- The maintenance operations required for the components that need lubricating are the following:
  1 - check of the levels;
  2 - oil change;
  3 - injection of grease through the grease nipples.
- Use only the specified lubricants, according to the ambient temperature.
- Always clean the grease nipples before injecting grease and remove any excess grease after lubrication; this cleaning operation must be performed with extreme care on the revolving parts.
- Keep the lubricants at the correct levels; excessive or insufficient quantities are to be avoided.

Downloaded from www.Manualslib.com manuals search engine

https://truckmanualshub.com/

4.2.5 PARTS SUBJECT TO WEAR THAT PERIODICALLY NEED CHANGING

The parts subject to wear such as filters, bucket teeth, etc. must be replaced according to the periodic maintenance intervals prescribed or when they reach the wear limit.
The timely change of these parts ensures an economic use of the machine.
Use only Komatsu Utility genuine parts, which alone can guarantee excellent quality and interchangeability.

ITEM	CODE	DESCRIPTION	Q.TY	CHANGE INTERVAL
Hydraulic oil filter	848101172	Cartridge	1	EVERY 250 HOURS
Engine oil filter	YM129150-35151	Cartridge	1	EVERY 500 HOURS
Fuel filter	YM119810-55650	Cartridge	1	EVERY 500 HOURS
Fuel pump precleaner	YM129052-55630	Filter	1	EVERY 500 HOURS
Air cleaner	YM119808-12520	Cartridge	1	WHEN NEEDED
Bucket	825011090 801015574 801920106	Tooth Screw Nut	AR AR AR	— — —

Downloaded from www.Manualslib.com manuals search engine

https://truckmanualshub.com/

4.3 FUEL, COOLANT AND LUBRICANTS

PROPER SELECTION ACCORDING TO THE AMBIENT TEMPERATURE

RESERVOIR	FLUID	AMBIENT TEMPERATURE -30 -22 / -20 -4 / -10 14 / 0 32 / 10 50 / 20 68 / 30 86 / 40 104 / 50°C 122°F	CAPACITY (l) 1st filling	CAPACITY (l) Change
Engine oil pan	OIL • API CD	SAE 10W SAE 20W-20 SAE 30 SAE 40 SAE 10W-30 SAE 15W-30	3.6 (PC20R) 5.2 (PC27R)	3.6 (PC20R) 5.2 (PC27R)
Hydraulic system	OIL • API CD	SAE 10W	48	29
Hydraulic system with biodegradable oil	SEE “4.3.1”		48	29
Travel reduction gears (ea.)	OIL • API CD	SAE 10W	0.7	0.7
Fuel tank	DIESEL OIL	✶ ASTM D975 N. 2	35	—
Engine cooling system	WATER + ANTIFREEZE		4	—
	WATER		4	—
	PERMANENT COOLANT		4	—

✶ ASTM D975 N.1

LUBRICATION WITH GREASE

LUBRICATION POINTS	CONSISTENCY	TYPE
Articulations, ball-bearing ring, ball-bearing ring pinion	NLGI 2	LITHIUM-BASED

Downloaded from www.Manualslib.com manuals search engine

https://truckmanualshub.com/

IMPORTANT

- **When the diesel oil sulphur content is less than 0,5%, change the engine oil according to the periodic maintenance intervals indicated in the operation and maintenance manual. If the diesel oil sulphur content exceeds 0,5%, change the engine oil according to the following table:**

Sulphur content	Engine oil change interval
from 0.5 a 1.0%	1/2 of regular interval
over 1.0%	1/4 of regular interval

- When starting the engine at temperatures below 0°C, use engine oil SAE 10W, 20W-20, even if during the day the temperature increases by 10°C.
- Use engine oil with CD classification; if oil with CC classification is used, reduce the engine oil change interval by a half.
- Use Komatsu Utility genuine products whose characteristics have been specifically formulated and approved for use in the engine, in the equipment hydraulic circuit and in the reduction gears.

First filling quantity: total quantity of oil, including the oil for the components and pipes.

Oil change quantity: quantity of oil necessary to fill the system or unit during the normal inspection and maintenance operations.

ASTM: American Society of Testing and Materials
SAE: Society of Automotive Engineers
API: American Petroleum Institute

Downloaded from www.Manualslib.com manuals search engine

https://truckmanualshub.com/

4.3.1 HOMOLOGATED HEES SYNTHETIC BIODEGRADABLE LUBRICANTS

Our machines can be filled with synthetic biodegradable hydraulic oil type HEES not of plant origin and therefore the use of the oils indicated in the following table is authorized and recommended :

SUPPLIER	HEES SYNTHETIC BIODEGRADABLE OIL
KOMATSU	BO 46 G4 (KES 07.872)
AGIP	—
ARAL	—
AVIA	—
BP	—
CONDAT	CONDAT D 46 K
ELF	—
ESSO	—
FINA	BIOHYDRAN SE 46
FUCHS	—
KENDALL	—
KUWAIT PETROLEUM K8	—
MOBIL	EAL SYNDRAULIC
MOBIL (USA)	—
PAKELO	—
PANOLIN	HLP SYNTH 46
SHELL	NATURELLE HFX-32
TAMOIL	—
TEXACO	—
TOTAL	HYDROBIO 46
VALVOLINE	—

CAUTION

- **It is not possible to mix the synthetic biodegradable oil type HEES with ordinary hydraulic oils, since when the temperature increases insoluble compounds are generated, which are deposited on the filters and clog them (the maximum concentration of ordinary oil cannot exceed 1% of the total quantity of oil).**
- **The synthetic biodegradable oil can be used only in the hydraulic system; it cannot be used for the endothermic motor, the transmissions, the braking system, etc.**
- **Before introducing the synthetic biodegradable oil in the hydraulic system, empty the system completely, disconnecting the cylinders and all the parts that may contain ordinary oil, and replace the drain filter with a new one.**
  Start the engine and let it idle without using the work equipment , wait until the oil reaches a temperature of at least 40°C, then start moving the equipment, so that all the parts of the system are filled with oil. Stop the engine and check the oil level (see “4.7.3.e CHECKING THE HYDRAULIC SYSTEM OIL LEVEL”).

Downloaded from www.Manualslib.com manuals search engine

https://truckmanualshub.com/

4.4 DRIVING TORQUES FOR SCREWS AND NUTS

4.4.1 STANDARD DRIVING TORQUES

★ Nm (Newton metre): 1 Nm = 0.102 kgm

Thread diameter (mm)	Pitch (mm)	Spanner size (mm)	8.8		10.9	
			kgm	Nm	kgm	Nm
6	1	10	0.96 ± 0.1	9.5 ± 1	1.3 ± 0.15	13.5 ± 1.5
8	1.25	13	2.3 ± 0.2	23 ± 2	3.2 ± 0.3	32.2 ± 3.5
10	1.5	17	4.6 ± 0.5	45 ± 4.9	6.5 ± 0.6	63 ± 6.5
12	1.75	19	7.8 ± 0.8	77 ± 8	11 ± 1	108 ± 11
14	2	22	12.5 ± 1	122 ± 13	17.5 ± 2	172 ± 18
16	2	24	19.5 ± 2	191 ± 21	27 ± 3	268 ± 29
18	2.5	27	27 ± 3	262 ± 28	37 ± 4	366 ± 36
20	2.5	30	38 ± 4	372 ± 40	53 ± 6	524 ± 57
22	2.5	32	52 ± 6	511 ± 57	73 ± 8	719 ± 80
24	3	36	66 ± 7	644 ± 70	92 ± 10	905 ± 98
27	3	41	96 ± 10	945 ± 100	135 ± 15	1329 ± 140
30	3.5	46	131 ± 14	1287 ± 140	184 ± 20	1810 ± 190

IMPORTANT

- **This driving torque table is not valid for screws or nuts that must lock parts made of nylon or similar materials onto washers or components made of nylon or nonferrous materials.**

4.4.2 SPECIFIC DRIVING TORQUES

ITEM	DESCRIPTION	kgm	Nm
Engine	Front support central nuts Rear support central nuts	6.75 ± 0.75 6.75 ± 0.75	66 ± 7.3 66 ± 7.3
Front engine supports Rear engine supports	Engine fastening screws Engine fastening screws	11 ± 1 6.75 ± 0.75	108 ± 11 66 ± 7.3

Downloaded from www.Manualslib.com manuals search engine

https://truckmanualshub.com/

4.5 LUBRICATION

4.5.1 LUBRICATION DIAGRAM

IMPORTANT

- **For the lubrication procedures for the single points, see “4.7 MAINTENANCE PLAN”.**
- **The type of lubricant to be used is indicated in the lubricant table (See “4.3 FUEL, COOLANT AND LUBRICANTS”).**

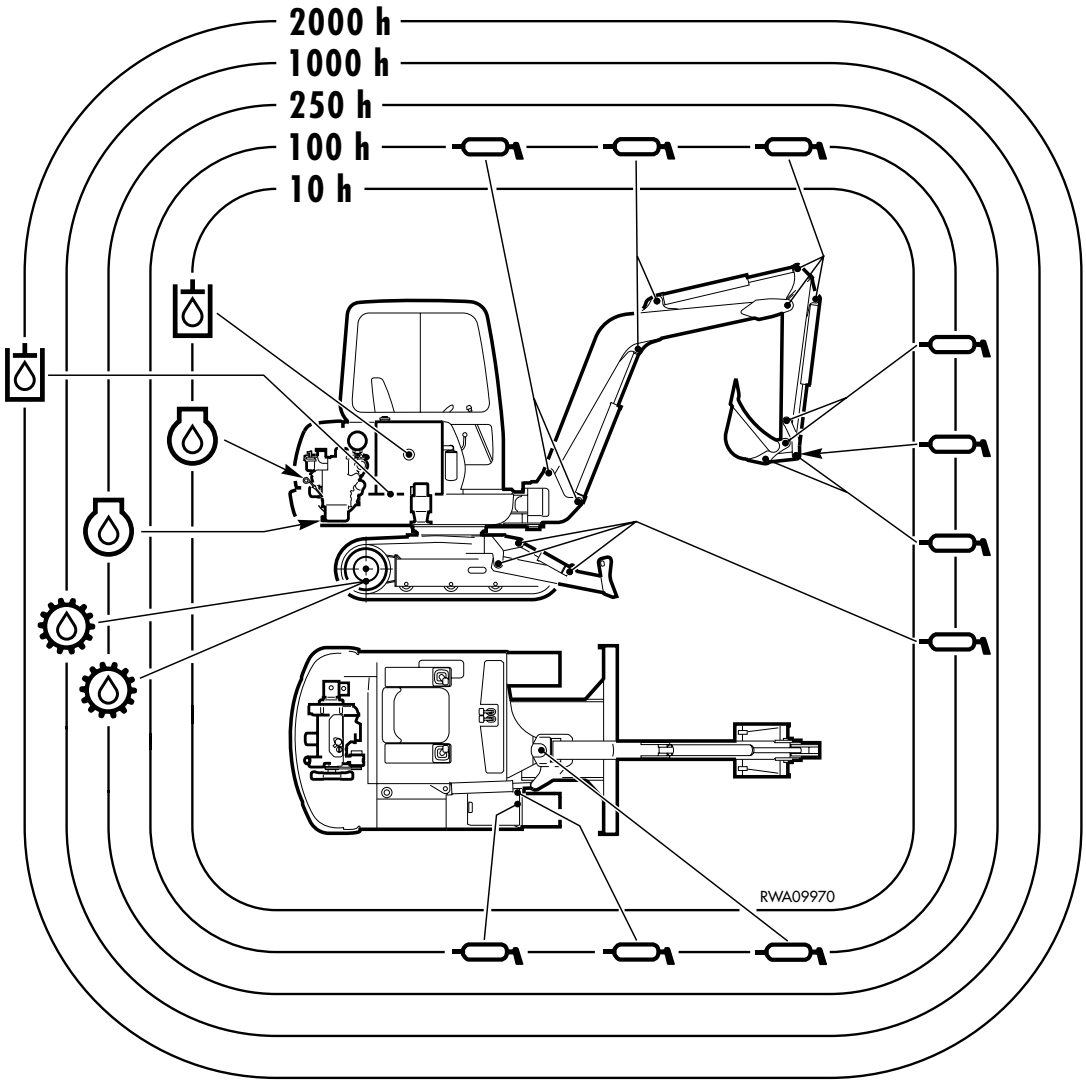

Engine oil

Hydraulic oil

Transmission oil

Grease

Downloaded from www.Manualslib.com manuals search engine

https://truckmanualshub.com/

4.6 PERIODICAL CHANGE OF THE COMPONENTS THAT ARE CONNECTED WITH SAFETY

To ensure safety at any moment while driving and using the machine, the operator must carry out all the periodic maintenance operations prescribed. Furthermore, the operator must periodically change the components indicated in the table in the following page, which are especially related to safety and accident-prevention rules. These components are subject to wear and since it is particularly difficult to evaluate their conditions through simple periodic maintenance, after a certain period it is advisable to change them independently of their state, in order to keep them efficient over time. Repair or replace these components immediately in case of failures or anomalies, even if the time interval prescribed for their change has not elapsed yet.

If the pipe clamps show signs of deterioration, like deformations or cracks, provide for changing them together with the pipes.

In addition to the periodical change of the components listed in the following page, the inspections described here below are to be carried out on the hydraulic pipes. In case of anomalies, carry out the necessary adjustments and changes, or adopt any other measure required.

Type of check	Check item
Check before starting	Leakages from joints, hydraulic pipes or fuel pipes
Periodical check (monthly check)	Leakages from joints, hydraulic pipes or fuel pipes. Damaged hydraulic or fuel pipes (cracks, wear and tear)
Periodical check (annual check)	Leakages from joints, hydraulic pipes or fuel pipes. Deteriorated, twisted, damaged hydraulic or fuel pipes (cracks, wear and tear) or pipes in contact with other parts of the machine

Downloaded from www.Manualslib.com manuals search engine

https://truckmanualshub.com/

4.6.1 CRITICAL PARTS FOR SAFETY

FUEL SUPPLY SYSTEM

No	Components related to safety that periodically need changing	Qty	Change interval
1	Fuel pipe (Fuel tank – precleaner)	1	Every 2 years or 4000 hours, whichever occurs first
2	Fuel pipe (Precleaner - fuel pump)	1	
3	Fuel pipe (Fuel pump - fuel filter)	1	
4	Fuel pipe (Fuel filter – injection pump)	1	
5	Fuel pipe (Fuel filter - fuel tank)	1	
6	Fuel recovery pipe (Fuel filter - Injection pump)	1	
7	Fuel recovery pipe (Between the injectors)	2	
8	Fuel recovery pipe (Injector - Injection pump)	1	
9	Fuel recovery plug	1	

- For the serial numbers and the quantity of the components that periodically need changing, consult the spare parts catalogue section regarding the components connected with safety and the components that must be periodically changed.
- When changing pipes, always change the O-rings, the gaskets and analogous components.

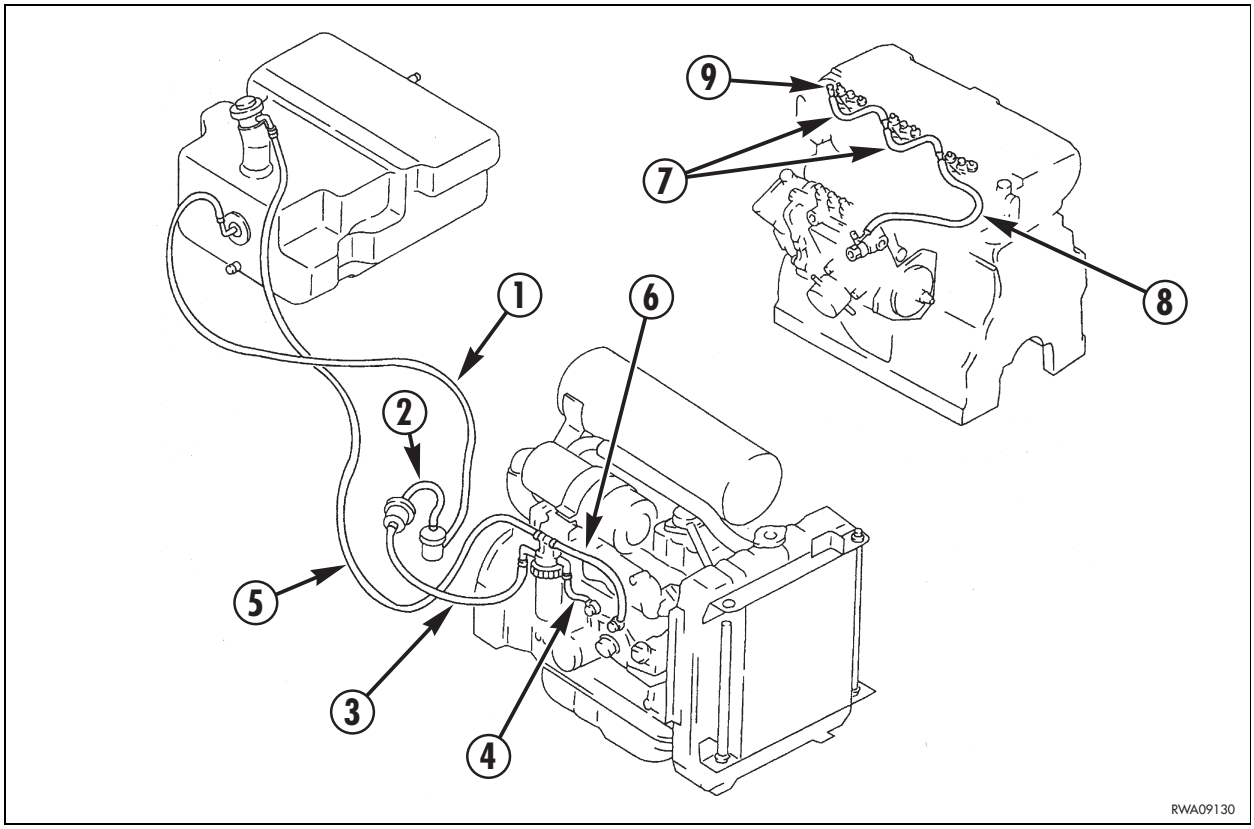

Downloaded from www.Manualslib.com manuals search engine

https://truckmanualshub.com/

HYDRAULIC SYSTEM

No	Components related to safety that periodically need changing	Qty	Change interval
1	Hydraulic pipe (Main pump delivery)	1	Every 2 years or 4000 hours, whichever occurs first
2	Hydraulic pipe (Secondary pump delivery)	1	
3	Hydraulic pipe (Load Sensing signal)	1	
4	Hydraulic pipe (Boom cylinder)	4	
5	Hydraulic pipe (Arm cylinder)	4	
6	Hydraulic pipe (Bucket cylinder)	4	

- For the serial numbers and the quantity of the components that periodically need changing, consult the spare parts catalogue section regarding the components connected with safety and the components that must be periodically changed.
- When changing pipes, always change the O-rings, the gaskets and analogous components.

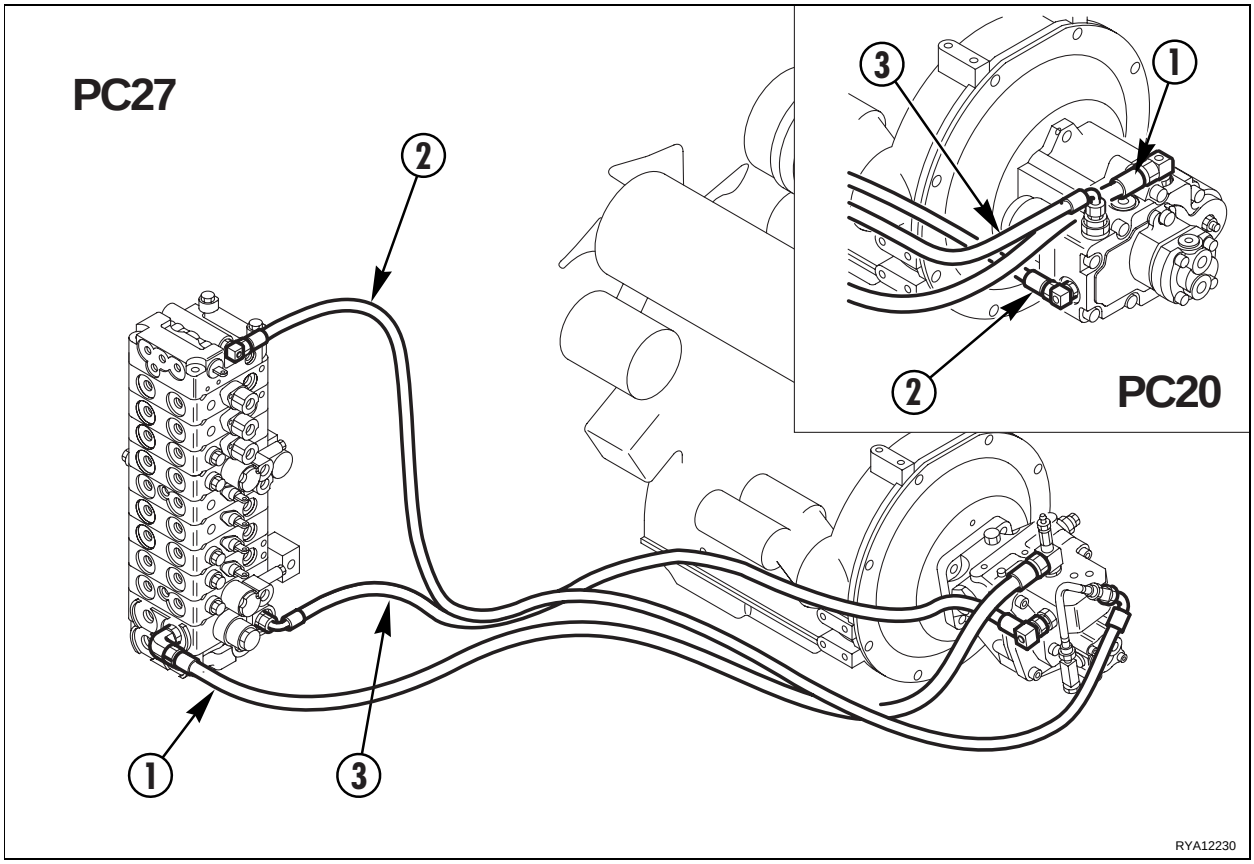

Downloaded from www.Manualslib.com manuals search engine

https://truckmanualshub.com/

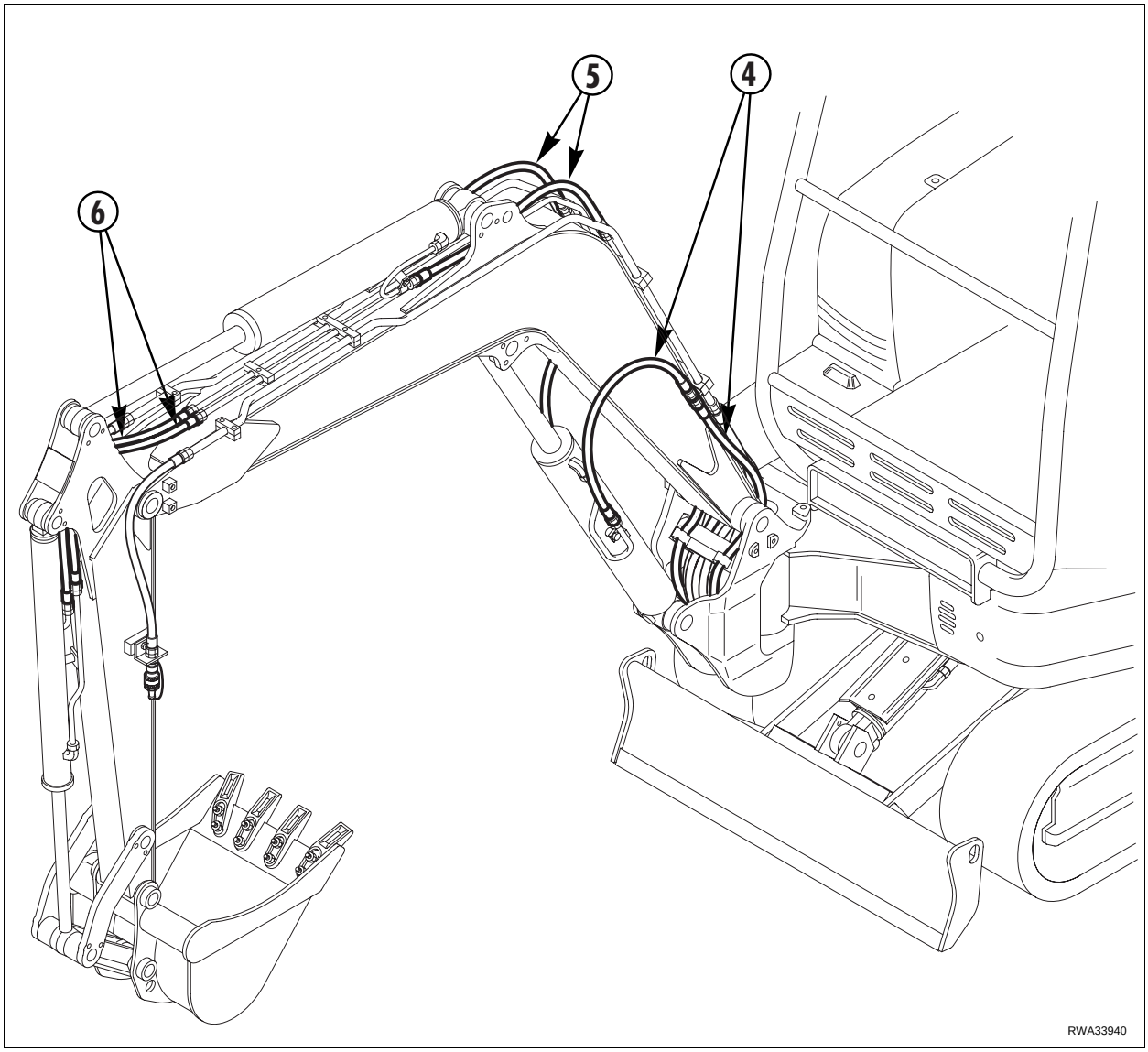

OPERATOR'S SAFETY

No.	Components related to safety that periodically need changing	Q.ty	Change interval
1	Safety belt	1	Every 4 years

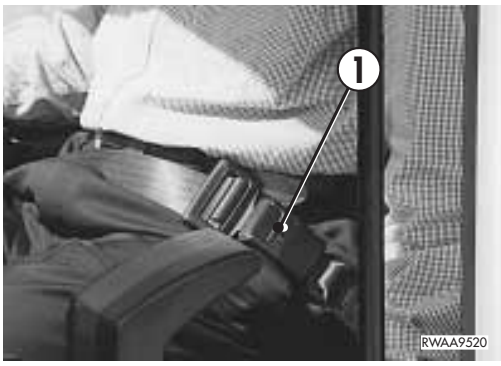

Downloaded from www.Manualslib.com manuals search engine

https://truckmanualshub.com/

4.7 MAINTENANCE PLAN

4.7.1 WHEN REQUIRED

N.	PART	OPERATION	PAGE
a	Cooling circuit	Wash	136
b	Fuel tank	Drain the condensate	137
c	Electrical system	Check	138
d	Steel tracks	Check and adjust the tension	138
e	Rubber tracks	Check	140
f	Rubber tracks	Check and adjust the tension	142
g	Rubber tracks	Change	144
h	Air cleaner	Check, clean or change	146

4.7.2 MAINTENANCE INTERVALS IN CASE OF USE OF THE DEMOLITION HAMMER (BREAKER)

N.	PART	OPERATION	PAGE
a	Hydraulic oil filter	Change the cartridge	147
b	Hydraulic oil tank	Change the oil	147

4.7.3 CHECKS BEFORE STARTING

N.	PART	OPERATION	PAGE
a	Various checks	—	148
b	Coolant	Check and top up	148
c	Fuel tank	Check and top up	149
d	Engine oil pan	Check and top up	149
e	Hydraulic oil tank	Check and top up	150
f	Air cleaner clogging indicator	Check	151
g	Fuel filter	Check	151

4.7.4 MAINTENANCE AFTER THE FIRST 50 HOURS OF OPERATION (Only for machines in which the synthetic biodegradable oil type HEES is used)

N.	PART	OPERATION	PAGE
a	Hydraulic oil drain filter (Only for machines with synthetic biodegrad-able oil)	Change	157

Downloaded from www.Manualslib.com manuals search engine

https://truckmanualshub.com/

4.7.5 MAINTENANCE EVERY 100 HOURS OF OPERATION

N.	PART	OPERATION	PAGE
a	Joint and ball-bearing ring articulations	Lubricate	153

4.7.6 MAINTENANCE AFTER THE FIRST 250 HOURS OF OPERATION

(Operations to be carried out together with those prescribed at point “4.7.7 MAINTENANCE EVERY 250 HOURS OF OPERATION”)

N.	PART	OPERATION	PAGE
a	Travel reduction gears	Change the oil	164
b	Engine valves	Check the clearance	169

4.7.7 MAINTENANCE EVERY 250 HOURS OF OPERATION

N.	PART	OPERATION	PAGE
a	Fan belt	Check the fan belt condition and its tension	155
b	Battery	Check the electrolyte level	156
c	Travel reduction gears	Check the levels (n. 2)	156
d	Hydraulic oil drainage filter	Change	157
e	Engine oil	Change	158

4.7.8 MAINTENANCE AFTER THE FIRST 500 HOURS OF OPERATION (Only for machines in which the synthetic biodegradable oil type HEES is used)

(Carry out these operations together with those to be performed every 500 HOURS, see “4.7.9 MAINTENANCE EVERY 500 HOURS OF OPERATION”)

N.	PART	OPERATION	PAGE
a	Hydraulic oil and suction filter (Only for machines with synthetic biodegradable oil)	Change oil and clean filter	165

4.7.9 MAINTENANCE EVERY 500 HOURS OF OPERATION

N.	PART	OPERATION	PAGE
a	Engine oil filter	Change	159
b	Fuel filter	Change	160
c	Fuel pump precleaner	Change	161
d	Radiators	Clean the outside	162
e	Hydraulic oil tank (Only for machines with synthetic biodegradable oil)	Drain condensate	163

Downloaded from www.Manualslib.com manuals search engine

https://truckmanualshub.com/

4.7.10 MAINTENANCE EVERY 1000 HOURS OF OPERATION

N.	PART	OPERATION	PAGE
a	Travel reduction gears	Change the oil	164

4.7.11 MAINTENANCE EVERY 2000 HOURS OF OPERATION

N.	PART	OPERATION	PAGE
a	Hydraulic oil and suction filter	Change the oil and clean the filter	165
b	Coolant	Change	168
c	Engine valves	Check the clearance	169
d	Alternator and starter	Check	169

Downloaded from www.Manualslib.com manuals search engine

https://truckmanualshub.com/

4.7.1 WHEN REQUIRED

4.7.1.a WASHING THE COOLING CIRCUIT

DANGER

- **Be extremely careful when carrying out this maintenance operation, since the engine must be running; one operator must remain on the machine and the operators must decide the words and signals to be used in advance.**
- **As soon as the machine has been stopped the coolant is very hot and under pressure and may cause serious burns; let the engine cool down until it reaches approximately 40÷45°C before starting the washing operations.**
- **Slowly loosen the radiator cap, to release the residual pressure.**
- **Let all the work equipment safety locks engaged.**
- **Oils, filters, the coolant and the battery are considered special waste and must be collected and disposed of according to the anti-pollution regulations in force.**

Whenever passing from the use of water to the use of antifreeze fluids and vice versa, it is necessary to wash the circuit in order to eliminate either the oxide deposits and the limestone encrustations. Proceed as follows:

1 - Open the engine hood (See “3.5.1 ENGINE HOOD”).

2 - Rotate the right counterweight to the open position (see "3.5.2 RIGHT COUNTERWEIGHT").

3 - With the fluid still warm, open the drain cock (2) of the radiator, remove the drain plug (3) positioned on the engine block and the radiator cap (1).
Use a 17 mm hexagon spanner.

4 - Let all the fluid flow out, put back the plug (3) on the engine block and close the radiator drain cock (2).

5 - Introduce a high-quality scale remover in the radiator, in the doses indicated on the package (remember that the capacity of the cooling system is approximately 4 litres) and fill the radiator with water.

6 - Start the engine and let it run at high rpm for about 15 minutes.

7 - Lower the engine speed to idling and drain the scale remover through the cock (2) of the radiator, at the same time filling the radiator with running water for at least 40 minutes.

8 - Stop the engine, let all the water flow out, close the radiator cock (2) and fill the circuit definitively with water or coolant.

9 - Start the engine and after a few minutes check the fluid level in the radiator; if necessary, top up before tightening the cap (1).

10 - After draining the water contained in the small tank (4), wash the inside and fill it with water or coolant until reaching a level included between the LOW and FULL marks.

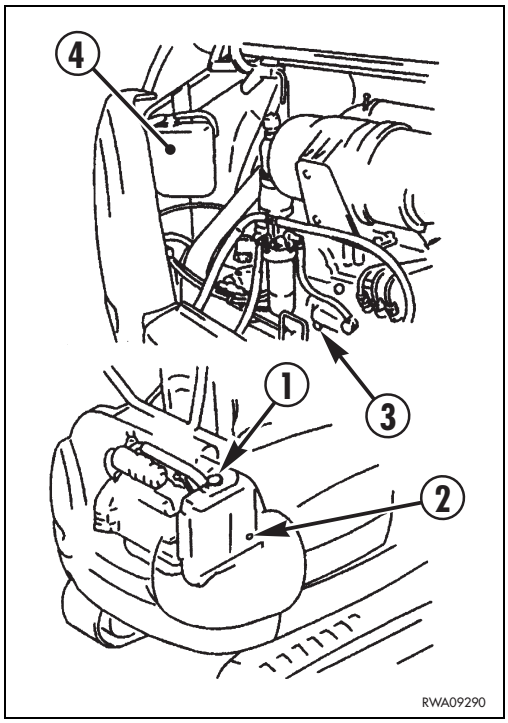

Downloaded from www.Manualslib.com manuals search engine

https://truckmanualshub.com/

11 - Rotate the lateral counterweight to the closed position and close the engine hood.

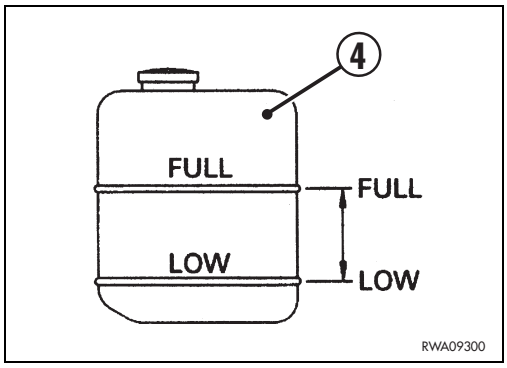

IMPORTANT

- **The circuit must be washed more frequently if the water used contains a high quantity of calcium salts, that is, if the water is very hard.**

4.7.1.b DRAINING THE FUEL TANK

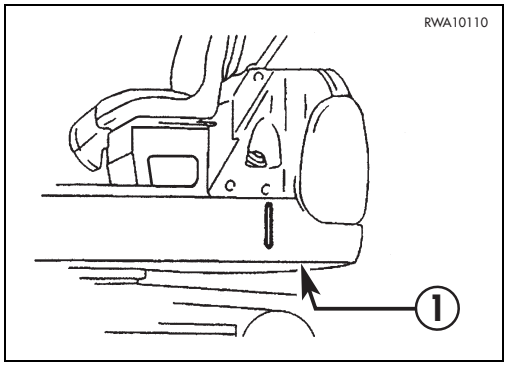

DANGER

- **When draining the fuel tank, avoid spilling fuel, since this may cause fires.**
- **If some fuel is accidentally spilled, clean the dirty area immediately, in order to prevent it from getting slippery and to avoid fires.**

This operation serves to let all the impurities and the condensate flow out of the tank; open the cock (1) at the base of the tank and wait until clean fuel flows out.

IMPORTANT

- **The tank must be drained before starting the engine, with temperatures exceeding 0°C; when the temperature is below 0°C, the tank must be drained at the end of work or in any case with the machine at operating temperature, to prevent the condensate from freezing.**
- **The condensate and the impurities that may have accumulated inside the tank must be eliminated before refuelling.**

Downloaded from www.Manualslib.com manuals search engine

https://truckmanualshub.com/

4.7.1.c CHECKING THE ELECTRICAL SYSTEM

DANGER

- **If the fuses are corroded, oxidized or not perfectly held in their seat, replace them only with fuses having the same capacity; before changing a fuse, make sure that the ignition key is in position «O».**
- **If there are signs of short circuit on the cables, find out the cause and repair them; always contact your Komatsu Utility Dealer for the troubleshooting.**

Make sure that there are no disconnected cables or signs of short circuit in the electrical system.
Make sure that all the cables are well tightened in the relevant terminals; tighten any loose cables.
In particular, check:

1. Battery
2. Starter
3. Alternator

4.7.1.d CHECKING THE STEEL TRACK TENSION

DANGER

- **This operation must be carried out by two operators. One operator must be seated in the cab and operate the machine according to the instructions of the operator who carries out the check and the adjustment.**
- **The track tension must be checked with the frame lifted from the ground; be careful not to move any control lever while the operator is carrying out the check.**

CHECK (for PC20R only)

Stop the machine on a firm and level surface and lower the equipment to the ground.

1 - Raise each track by means of boom and arm.
Operate the control levers slowly during this operation.

2 - Measure the distance between the track and the second roller, starting from the sprocket. If the distance is included between 10 and 30 mm, the tension is normal.
If the value is not included in this interval, adjust the track until reaching the correct value.

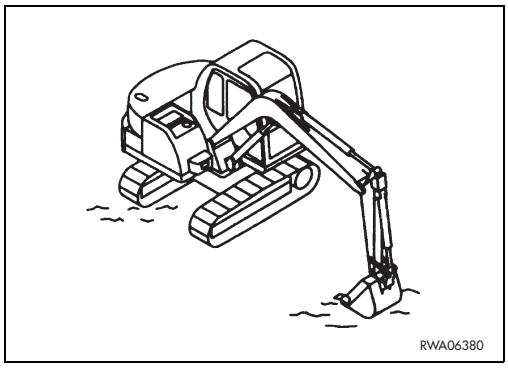

CHECK (for PC27R only)

Stop the machine on a firm and level surface and lower the equipment to the ground.

1 - Raise each track by means of boom and arm.
Operate the control levers slowly during this operation.

2 - Measure the distance between the track and the third roller, starting from the sprocket. If the distance is included between 10 and 30 mm, the tension is normal.
If the value is not included in this interval, adjust the track until reaching the correct value.

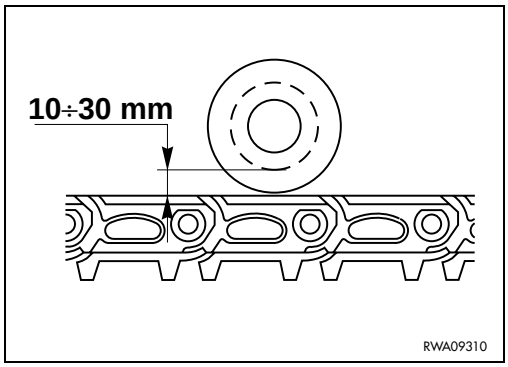

Downloaded from www.Manualslib.com manuals search engine

https://truckmanualshub.com/

ADJUSTMENT

DANGER

- **The grease contained in the hydraulic cylinder is under pressure. For this reason, do not loosen the greasing valve (1) giving it more than one turn; if the valve is loosened excessively, it may be pushed out due to the grease pressure and this is very dangerous for the operator.**
  Do not loosen any other component apart from the valve (1).
- **If you notice excessive resistance while injecting grease, slowly move the machine forward and backward for a short distance.**

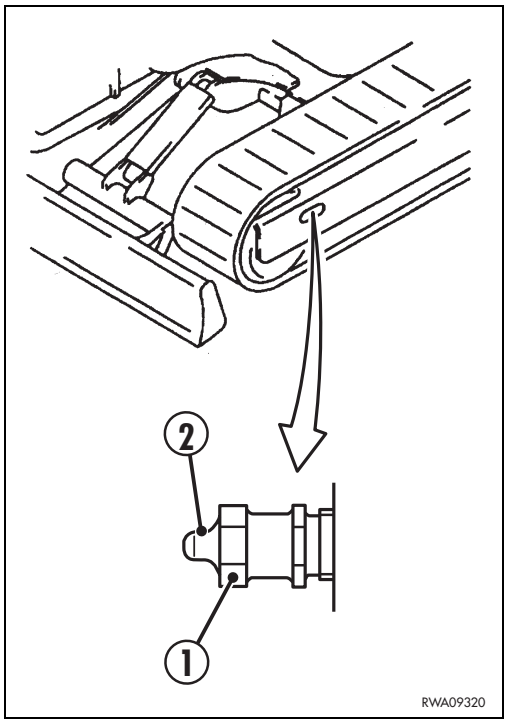

To increase the tension

1 - Carefully clean the greasing valve (1) and inject grease through the greaser (2) until reaching the desired tension.

2 - When, owing to the injection of grease, the idler shoe reaches the “S” measure, that is, 0 mm and the track tension is not sufficient, this means that the pins and bushings are excessively worn.
It is therefore necessary to turn or change the pins and bushings.
For any change or repair, contact your Komatsu Utility Dealer.

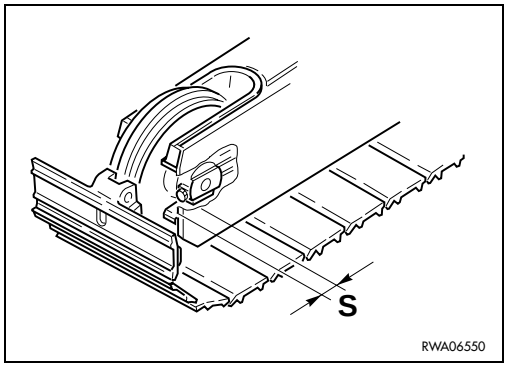

To reduce the tension

1 - Gradually loosen the greasing valve (1) to let the grease out; do not give the valve more than one turn.
Use a 19 mm hexagon spanner.

2 - If the grease does not flow out freely, move the machine slowly forward and backward for a short distance.

3 - Tighten the valve and remove any trace of grease.

4 - Move the machine forward and backward and, after stopping it, check the track tension again.

IMPORTANT

- **The wear of pins and bushings varies according to the work conditions and the characteristics of the ground on which the machine operates.**
  Therefore, it is necessary to check the track tension frequently.
- **When working on rocky or extremely uneven ground, increase the track tension in order to prevent the introduction of stones or rubble between the tracks and the sprocket; when working on soft or muddy ground, decrease the track tension, since the soil penetrates between rollers, sprocket and tracks and tends to increase it.**

Downloaded from www.Manualslib.com manuals search engine

https://truckmanualshub.com/

4.7.1.e CHECKING THE RUBBER TRACKS

Change the rubber tracks when they reach the prescribed wear limits.

1 - When the height “A” of the rubber claw is lower than 5 mm; if the height of the claw is below 5 mm, the risk of track slipping increases and the advance power will decrease accordingly.
1- Roller
2- Rubber track

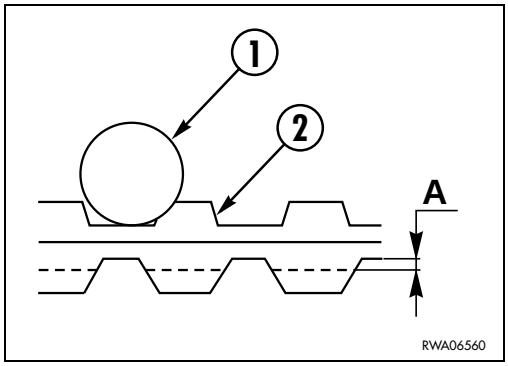

2 - When the steel reinforcement (3) can be seen on two or more points on the track.

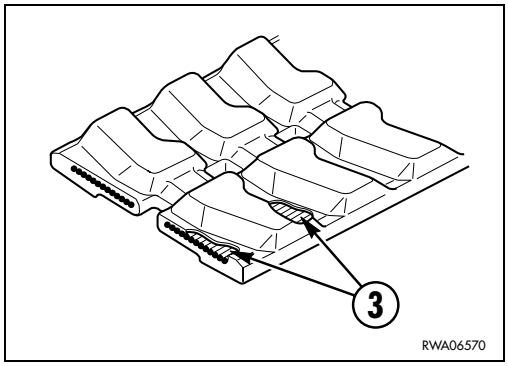

3 - When more than a half of the wires of the steel reinforcement positioned at the centre of the track are cut.

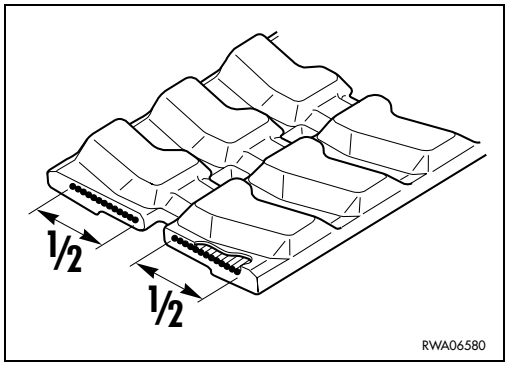

4 - When one or more steel reinforcement units (4) come off the track or are ejected due to the excessive tension.

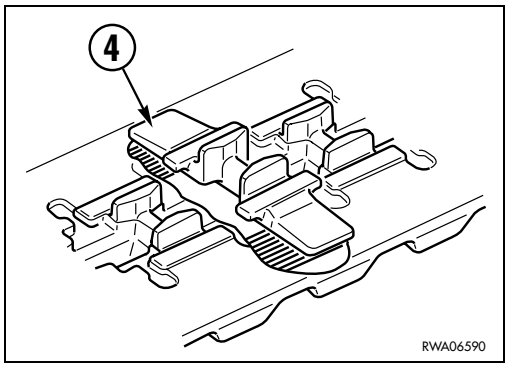

Downloaded from www.Manualslib.com manuals search engine

https://truckmanualshub.com/

5 - If the rubber track tension is not sufficient after having been adjusted through the injection of grease, check the idler gaskets and if necessary change them or change the track.
(See “4.7.1.f CHECKING THE RUBBER TRACK TENSION”).

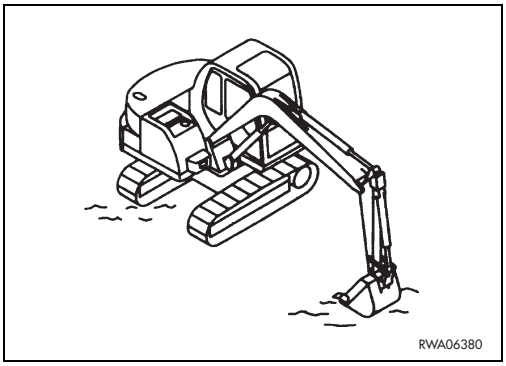

IMPORTANT

- **If the track tension is adjusted so that the shoe may come off its seat, the track may be lengthened and the idler cylinder may be damaged, too.**

6 - If the break between the support claws of the rubber tracks reaches a length (1) of approximately 60 mm, the track must be repaired.
It must be immediately repaired even when the break is very slight, but the steel reinforcement units can be seen.

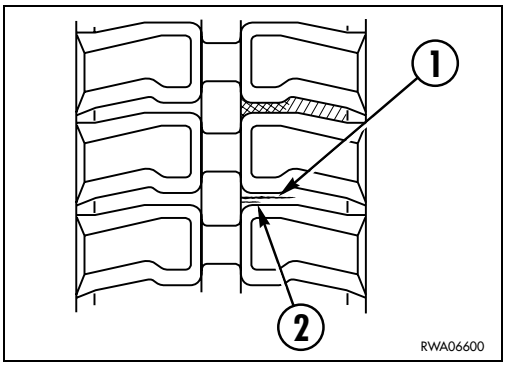

IMPORTANT

- **If the break length (2) is inferior to 30 mm, or its depth is inferior to 10 mm, the track does not need repairing.**
- **For any change or repair, contact your Komatsu Utility Dealer.**

Downloaded from www.Manualslib.com manuals search engine

https://truckmanualshub.com/

4.7.1.f CHECKING THE RUBBER TRACK TENSION

DANGER

- **This operation must be carried out by two persons. One operator must sit in the cab and move the machine according to the signals of the operator who carries out the check and the adjustment.**
- **The shoe tension must be checked with the frame lifted from the ground. Do not operate any control lever while the operator is carrying out the check.**

CHECK (for PC20R only)

Stop the machine on a firm and level surface.

1 - Position the joint of the rubber track marked with M on the upper part of the track, mid-way between the two axes.

2 - Lower the equipment to the ground and lift each track by means of boom and arm.
When carrying out this operation, move the control levers slowly.

3 - Measure the distance between the track and the second roller, starting from the sprocket.
If the distance is included between 10 and 15 mm, the tension is normal.
If the clearance exceeds the standard value, adjust the tension and restore the correct value.

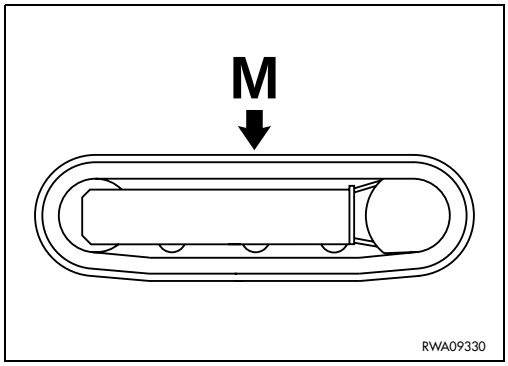

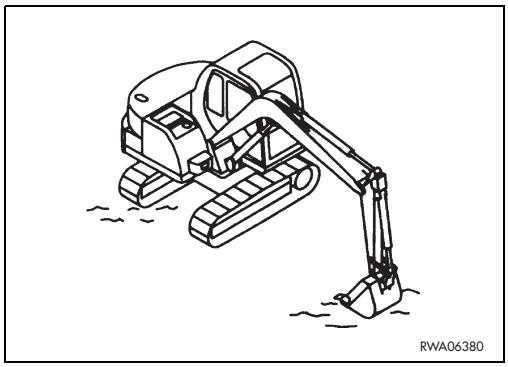

CHECK (for PC27R only)

Stop the machine on a firm and level surface.

1 - Position the joint of the rubber track marked with M on the upper part of the track, mid-way between the two axes.

2 - Lower the equipment to the ground and lift each track by means of boom and arm.
When carrying out this operation, move the control levers slowly.

3 - Measure the distance between the track and the third roller, starting from the sprocket.
If the distance is included between 10 and 15 mm, the tension is normal.
If the clearance exceeds the standard value, adjust the tension and restore the correct value.

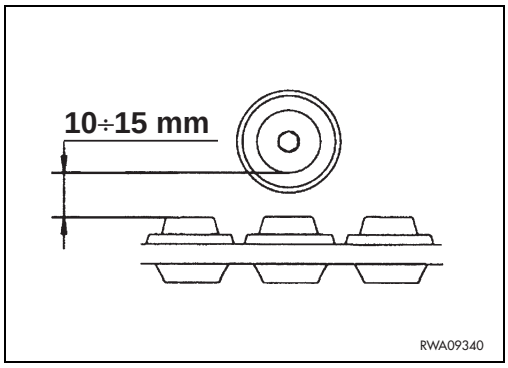

IMPORTANT

- **If the machine is operated with loose rubber tracks, the shoes may come off their seats and consequently off the track, or the steel reinforcement units may wear too quickly.**

Downloaded from www.Manualslib.com manuals search engine

https://truckmanualshub.com/

ADJUSTMENT

DANGER

- **The grease contained in the hydraulic cylinder is under pressure. For this reason, do not loosen the greasing valve (1) giving it more than one turn; if the valve is loosened excessively, it may be pushed out due to the grease pressure and this is very dangerous for the operator.**
  Do not loosen any other component apart from the valve (1).
- **If you notice excessive resistance while injecting grease, slowly move the machine forward and backward for a short distance.**

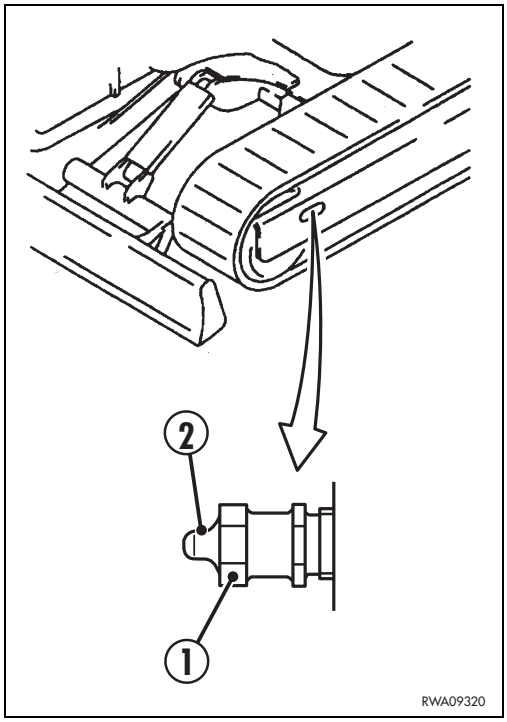

1 - To increase the tension, carefully clean the greasing valve (1) and inject grease through the greaser (2) until reaching the desired tension.

2 - To reduce the tension, gradually loosen the greasing valve (1) to let the grease out; do not give the valve more than one turn.
Use a 19 mm hexagon spanner.

3 - If the grease does not flow out freely, move the machine slowly forward and backward for a short distance.

4 - Tighten the valve and remove any trace of grease.

5 - Move the machine forward and backward, stop it and check the track tension again.

6 - If the rubber track tension is not sufficient even after the injection of grease, change the track or the idler seals.
For these operations, contact your Komatsu Utility Dealer.

IMPORTANT

- **The wear of the rubber tracks varies according to the work conditions and to the characteristics of the ground on which the machine is operated.**
  Therefore, it is necessary to check the track tension frequently, in order to keep it constant.
- **After the installation of new tracks, it is advisable to carry out a first check after 30 hours of operation.**

Downloaded from www.Manualslib.com manuals search engine

https://truckmanualshub.com/

4.7.1.g CHANGING THE RUBBER TRACK

DANGER

- **This operation must be carried out by two persons. One operator must sit in the cab and move the machine according to the signals of the operator who carries out the check and the adjustment.**
- **The shoe tension must be checked with the frame lifted from the ground. Do not operate any control lever while the operator is carrying out the check.**
- **During the check, do not remove any part except the shoe to be changed.**
- **If the shoe tension cannot be loosened by proceeding as indicated below, contact your Komatsu Utility Dealer, who will carry out the necessary repairs.**

REMOVING THE RUBBER TRACK

DANGER

- **The grease contained in the hydraulic cylinder is under pressure. For this reason, do not loosen the greasing valve (1) giving it more than one turn; if the valve is loosened excessively, it may be pushed out due to the grease pressure and this is very dangerous for the operator.**
  Do not loosen any other component apart from the valve (1).
- **When assembling or removing the track, before rotating the sprocket make sure that the grease contained in the cylinder has been removed.**
- **If you notice excessive resistance while injecting grease, slowly move the machine forward and backward for a short distance.**

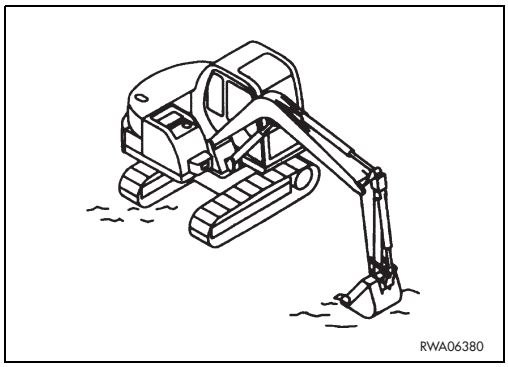

Stop the machine on a firm and level surface and lower the equipment to the ground.

1 - Raise the undercarriage by means of boom and arm.
When carrying out this operation, move the control levers slowly.

2 - Gradually loosen the greasing valve (1) to let the grease out; do not give the valve more than one turn.
Use a 19 mm hexagon spanner.

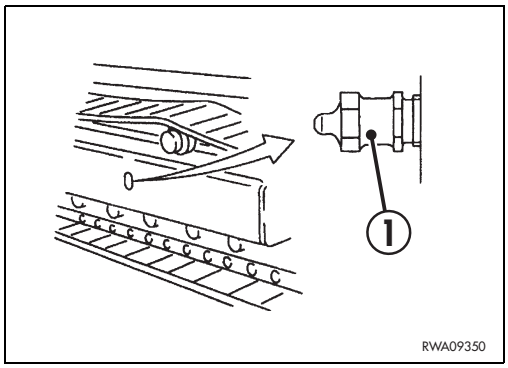

3 - If the grease does not flow out freely, move the track slowly forward and backward for a short distance.

4 - Insert the steel tubes (2) inside the track, rotate the sprocket as if in reverse (3), so that the steel tubes move with the track and engage in the idler roller; slide the track (4) sidewards and remove it.

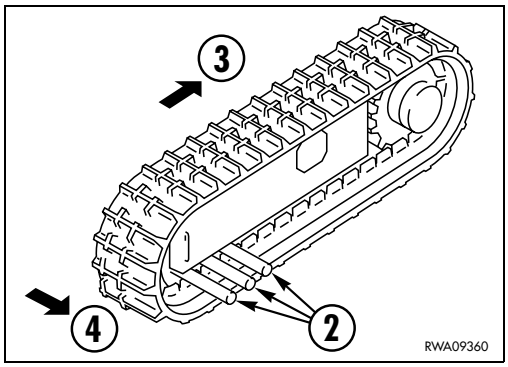

Downloaded from www.Manualslib.com manuals search engine

https://truckmanualshub.com/

INSTALLING THE RUBBER TRACK

1 - Raise the undercarriage by means of boom and arm and make sure that the grease contained in the cylinder has been removed.
When carrying out this operation, move the control levers slowly.

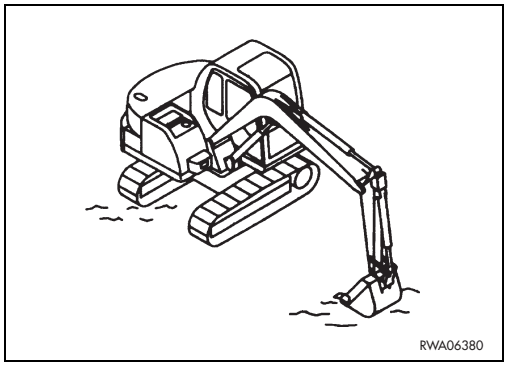

2 - Install the rubber tracks on the sprocket, inserting the drive blocks.

3 - Rotate the sprocket as if in reverse (1), pushing the outer edge of the track towards the upper structure.

4 - By means of a steel tube (2), position the track and rotate the sprocket again.

5 - Make sure that the rubber track properly fits in the sprocket and the idler roller.

6 - Adjust the track tension. For further details (See “4.7.1.f CHECKING THE RUBBER TRACK TENSION”).

7 - Make sure that the track tension is correct and that the track is properly inserted in the sprocket and the idler roller; place the machine on the ground.

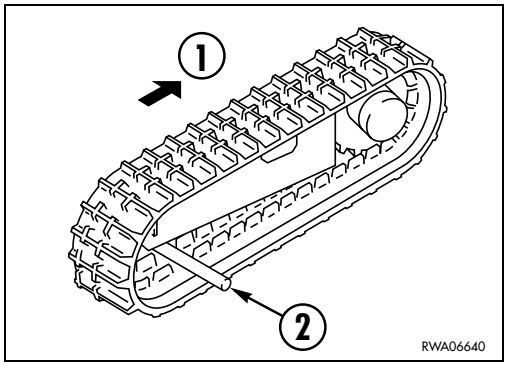

Downloaded from www.Manualslib.com manuals search engine

https://truckmanualshub.com/

4.7.1.h CHECKING, CLEANING OR CHANGING THE AIR CLEANER CARTRIDGE

DANGER

- **Remove the air cleaner only after stopping the engine and do not start the engine if the air cleaner is open.**
- **Wear safety goggles during the cleaning operations.**

IMPORTANT

- **When the red piston of the clogging indicator (1) is visible through the gauge, clean or change the air cleaner cartridge.**
  In any case, check the cartridge for any clogging every 50 hours of operation of the machine.

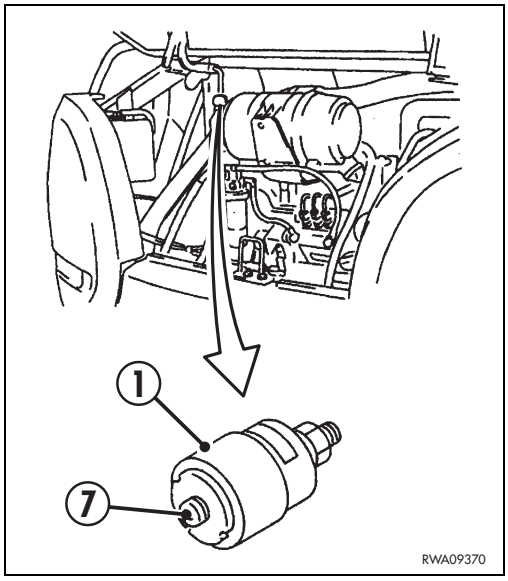

The air cleaner (2) can be reached by opening the engine hood (see “3.5.1 ENGINE HOOD”).
To clean the element, proceed as follows:

1 - Remove the couplings (3), remove the cover (4) and extract the filtering element (5).

2 - Slightly strike the filtering element on the palm of your hand to remove the dust and blow compressed air on the inner surface, keeping the air jet at a distance of approximately 15 cm and making sure that the pressure does not exceed 45 bars.

3 - Carefully clean the clogging cover (4) and the filter case (6), taking care to prevent the introduction of foreign matters in the suction pipe; reassemble the whole making sure that the ejector on the covers is facing downwards.

4 - Press the push button (7) of the clogging indicator (1) in order to restore the pressure of the red piston.

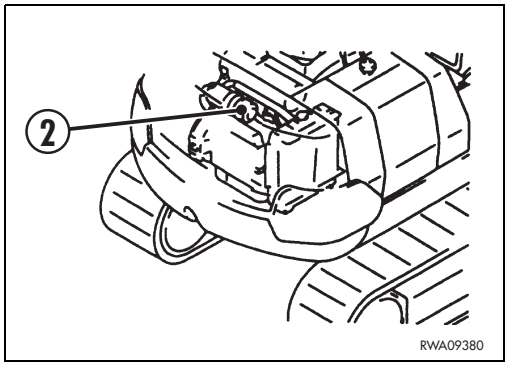

IMPORTANT

- **If shortly after the installation of the clean element the red piston of the clogging indicator is visible again, it is necessary to change the filtering element.**
- **Change the filtering element when it has been cleaned 5 times or after 1 year of use.**

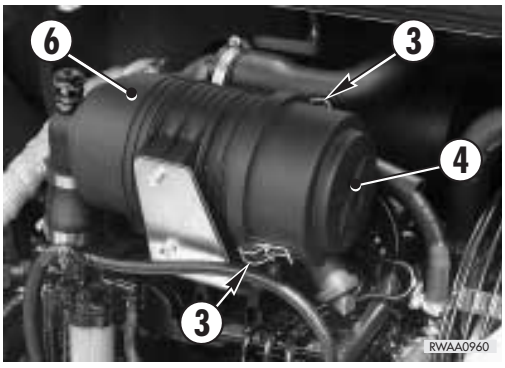

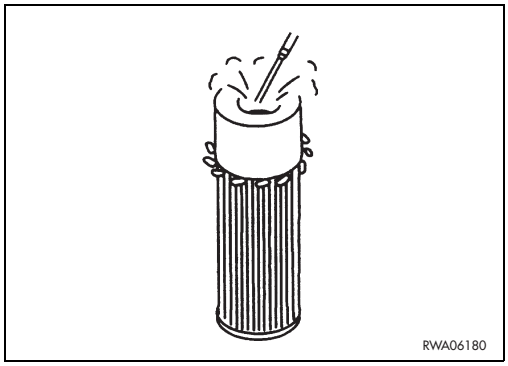

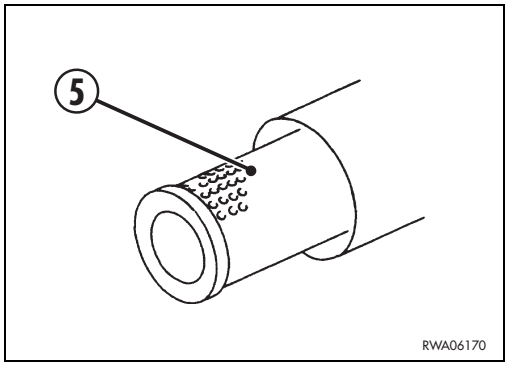

Downloaded from www.Manualslib.com manuals search engine

https://truckmanualshub.com/

4.7.2 MAINTENANCE INTERVALS IN CASE OF USE OF THE DEMOLITION HAMMER (BREAKER)

The hydraulic oil used in the machines provided with demolition hammer deteriorates more quickly than the oil used in normal digging machines, therefore it is advisable to respect the following maintenance plan.

4.7.2.a CHANGING THE HYDRAULIC OIL FILTER

In new machines, change the filter after the first 100÷150 hours of operation and for the successive changes keep to the indications given in the table on the right.
If the machine contains synthetic biodegradable oil type HEES, the filter must be changed after the first 50 hours of operation.

4.7.2.b CHANGING THE HYDRAULIC OIL

Change the hydraulic oil in the tank according to the intervals indicated in the table on the right.
On machines containing synthetic biodegradable oil type HEES, change the oil after the first 500 hours of operation and for the successive changes keep to the indications given in the table on the right.

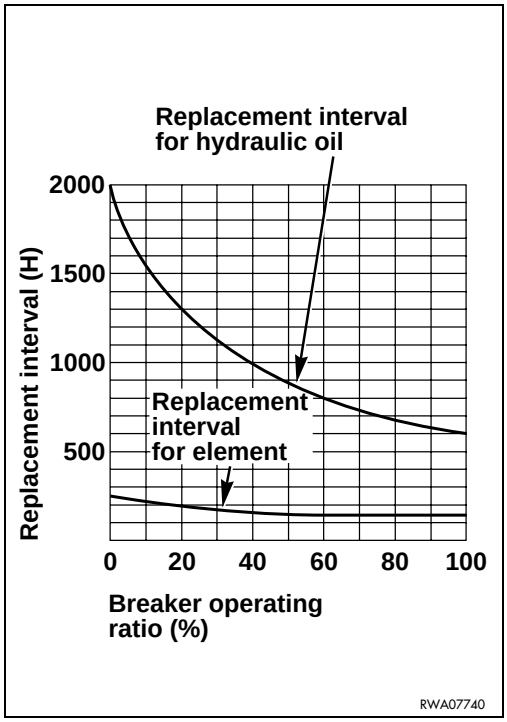

Downloaded from www.Manualslib.com manuals search engine

https://truckmanualshub.com/

4.7.3 CHECKS BEFORE STARTING

4.7.3.a VARIOUS CHECKS

DANGER

- **Dirt, oil and fuel spread in the engine compartment near the hot areas may cause fires and damage the machine.**
  Check if there are leakages frequently and carry out the necessary repairs immediately; if this occurs repeatedly, contact your Komatsu Utility Dealer.

Before starting the engine, check:

1. if there are loose screws or nuts;
2. if there are oil, fuel or coolant leakages;
3. if the work equipment is worn;
4. the track tension and wear;
5. the conditions and efficiency of the instruments and warning lights on the dashboard, of the acoustic alarm, of the working lights and of the horn.

The other general checks concern safety, and precisely:

6. soundness of the safety belt;
7. soundness and legibility of the warning plates;
8. cleanliness of the handles used to reach the driver's seat, cleanliness inside the driver's cab.

4.7.3.b CHECKING THE COOLANT LEVEL

DANGER

- **Do not remove the radiator cap; the coolant must be checked with cold engine, through the compensation tank.**

The coolant tank (1) can be reached after opening the engine hood and the coolant level must be included between the LOW and FULL marks.
If necessary, add water or coolant and, if a constant and considerable decrease in the coolant level can be noticed, check the tightness of the engine-radiator unit and of the radiator body.

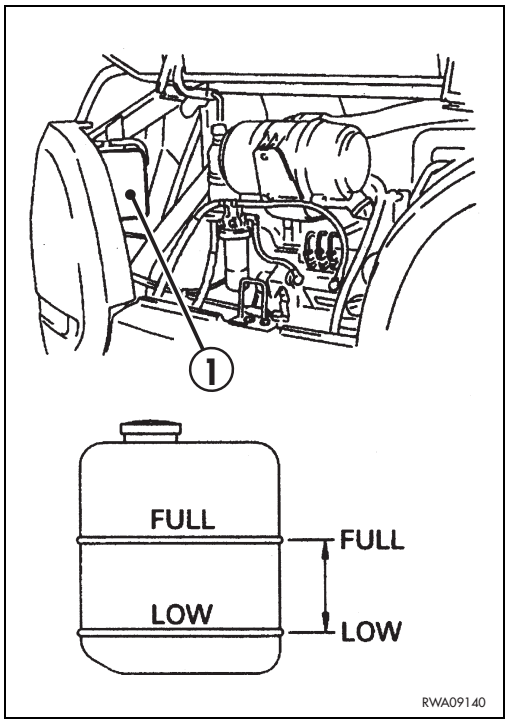

Downloaded from www.Manualslib.com manuals search engine

https://truckmanualshub.com/

4.7.3.c CHECKING THE FUEL LEVEL

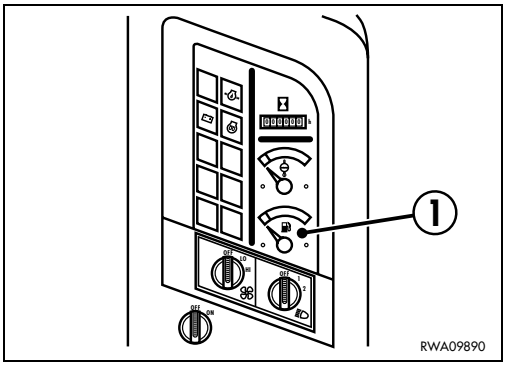

DANGER

- **When refuelling, avoid spilling fuel to prevent any risk of fire. If some fuel should inadvertently be spilled, clean the dirty area immediately.**
- **Fuel is flammable; neither use naked flames, nor smoke while refuelling.**
- **Thrust the filling gun into the filler.**

To check the fuel level, use the indicator provided on the dashboard (1), after turning the ignition key to position «**I**».
The fuel level can also be checked through the gauge (2) positioned on the tank.
Do not fill the tank completely, in order to leave space for the expansion of the fuel.

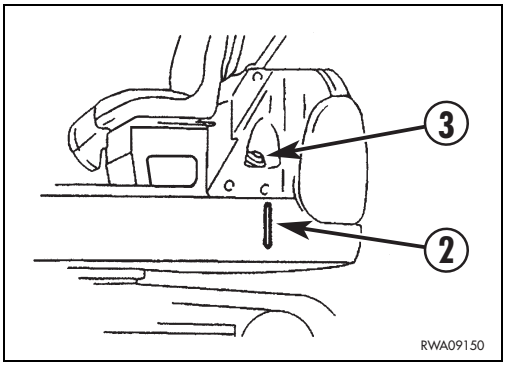

IMPORTANT

- **It is advisable to refuel after work, in order to avoid the formation of water condensate.**
- **After refuelling, tighten the filler cap (3) thoroughly and lock the tank.**

4.7.3.d CHECKING THE ENGINE OIL LEVEL

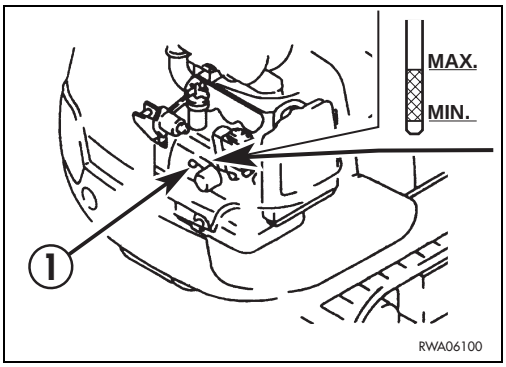

DANGER

- **Soon after the machine has been stopped the engine is very hot and may cause burns; let the engine cool down before carrying out any check.**

The dipstick can be reached by opening the engine hood (See “3.5.1 ENGINE HOOD”).
The check must be carried out with cold engine and the machine positioned on level ground.
The oil level can be checked on the graduated dipstick (1) and must be included between the MIN. and MAX. marks; if the level is near the MIN. mark, top up by adding the oil suitable for the ambient temperature prescribed in the lubricant chart through the filler (2).
(See “4.3 FUEL, COOLANT AND LUBRICANTS”).

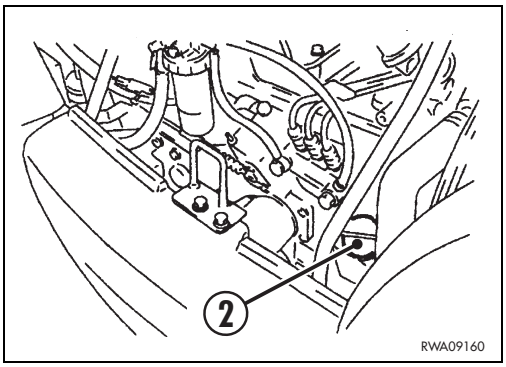

IMPORTANT

- **If it is necessary to check the oil level during or soon after work, stop the engine and wait for 15 minutes before carrying out the check.**

Downloaded from www.Manualslib.com manuals search engine

https://truckmanualshub.com/

4.7.3.e CHECKING THE OIL LEVEL IN THE HYDRAULIC CIRCUIT

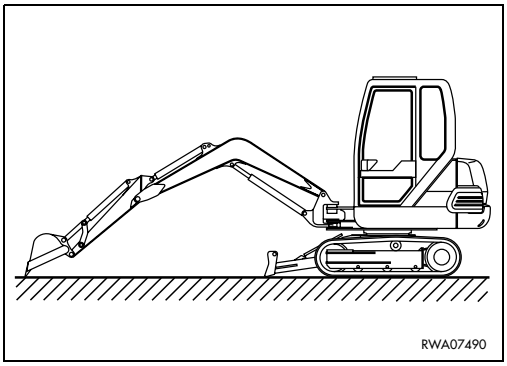

DANGER

- **The oil level in the hydraulic circuit must be checked with cold oil and the machine positioned on level ground, with retracted bucket and arm cylinders and the bucket teeth resting on the ground.**
- **If it is necessary to top up, stop the engine and then eliminate the residual pressures present in the equipment (move the controls more than once) and in the tank by slowly loosening the filling cap.**

The oil level must be visible through the gauge (1) positioned on the tank and must be included between the MIN. and MAX. marks.
If the level is near the MIN. mark, top up by adding the prescribed hydraulic oil (see “4.3 FUEL, COOLANT AND LUBRICANTS”) through the filler (2); then put back the fillercap.
Use a 24 mm hexagon spanner.

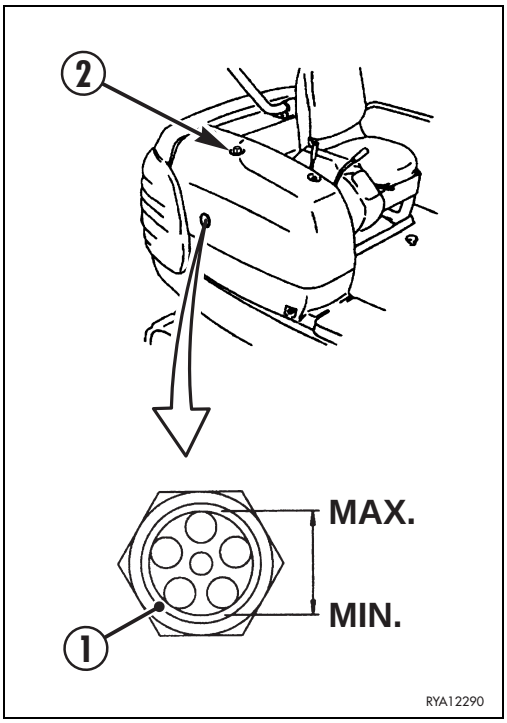

IMPORTANT

- **When topping up, do not exceed the MAX. level. This would damage the hydraulic circuit and cause the oil to flow out.**

At this point, pressurize the tank; completely extend the boom, arm and bucket cylinders as shown in the figure and remove the fillercap (2).
Put back the cap and pressurize the inside of the tank by lowering the equipment to the ground.

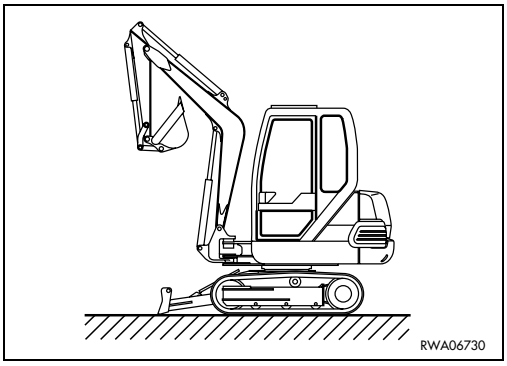

IMPORTANT

- **If a constant or abnormal decrease in the oil level is observed, carefully check the tightness of the hydraulic circuit, of the pistons and of the pump.**

Downloaded from www.Manualslib.com manuals search engine

https://truckmanualshub.com/

4.7.3.f CHECKING THE AIR CLEANER CLOGGING INDICATOR

The clogging indicator is installed on the air cleaner and can be reached by opening the engine hood.
When the air cleaner is clogged, the red piston of the indicator (1) visible through the gauge indicates that maintenance is required.
Check, clean or change the filtering element as described in paragraph “4.7.1.h CHECKING, CLEANING OR CHANGING THE AIR CLEANER CARTRIDGE”.
After performing the necessary maintenance operation, press the push button (2) to restore the pressure of the red piston.

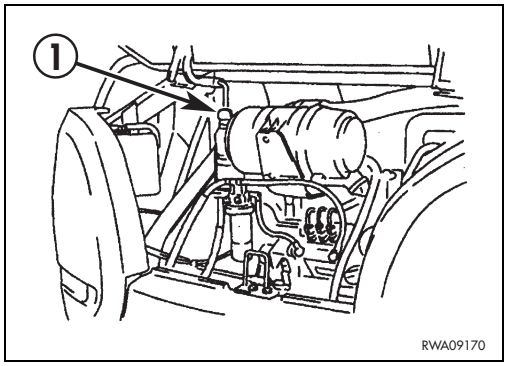

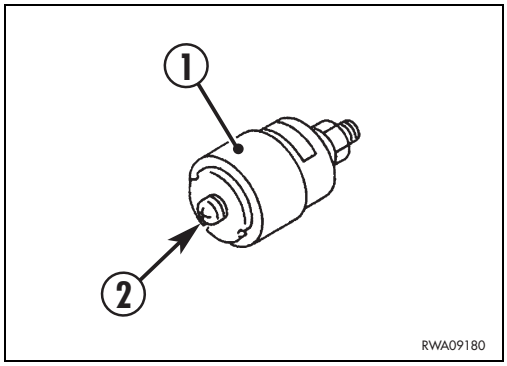

4.7.3.g CHECKING THE FUEL FILTER FOR SEDIMENT AND WATER

DANGER

- **Fuel is flammable; keep any naked flame away and do not smoke while draining the fuel.**
- **If some fuel is accidentally spilt, clean the dirty area immediately.**

The check can be carried out by means of the red ring (1) installed in the filter.
When the red ring floats on the surface of the water present in the filter, it is necessary to drain the fuel tank by proceeding as follows:

1 - Turn the cock (2) to stop the fuel flow.

2 - By means of the specific spanner provided, loosen the metal ring (3), remove the container (4) and eliminate the water it contains.

3 - Clean the sealing surface of the cover (5), install the O ring and spread some grease on it.

4 - Put back the container (4), tighten the metal ring (3) and open the fuel cock.

5 - Drain the fuel tank as described in paragraph “4.7.1.b DRAINING THE FUEL TANK”.

6 - Bleed the fuel circuit as described in paragraph “4.7.9.b CHANGING THE FUEL FILTER - BLEEDING THE FUEL CIRCUIT”.

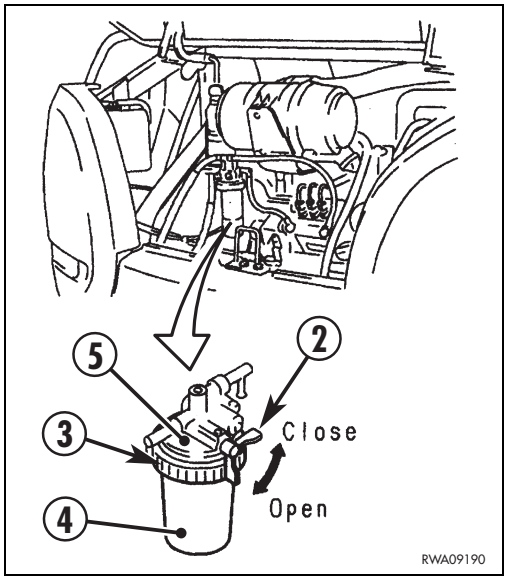

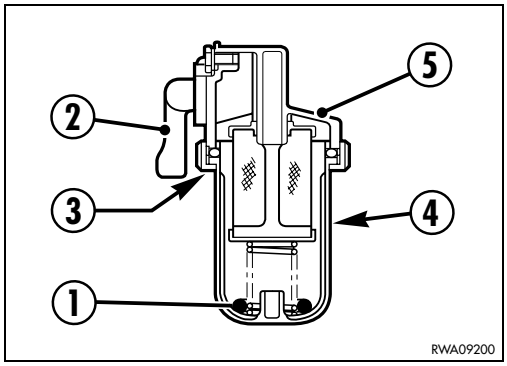

Downloaded from www.Manualslib.com manuals search engine

https://truckmanualshub.com/

4.7.4 MAINTENANCE AFTER THE FIRST 50 HOURS OF OPERATION (Only for machines in which the synthetic biodegradable oil type HEES is used)

The following maintenance operation must be carried out after the first 50 hours of operation.

- HYDRAULIC OIL DRAIN FILTER CHANGE

For further details on the various maintenance operations, see section “EVERY 250 HOURS”.

Downloaded from www.Manualslib.com manuals search engine

https://truckmanualshub.com/

4.7.5 MAINTENANCE EVERY 100 HOURS OF OPERATION

4.7.5.a LUBRICATING THE JOINTS AND THE BALL-BEARING RING

IMPORTANT

- **Clean the grease nozzles before applying the greasing pump.**
- **After lubrication, remove any excess grease.**
- **If the machine is used in difficult conditions, perform this maintenance operation more frequently.**

These maintenace operations must be carried out with the equipment completely extended and resting on the ground. For the lubrication, use a syringe and the prescribed grease.
(See “4.3 FUEL, COOLANT AND LUBRICANTS”).

IMPORTANT

- **As a general rule, it is important to consider that each cylinder is provided with two greasers positioned on the coupling eyelets and that each pin serving as fulcrum for a movement is provided with at least one greaser.**
- **When injecting grease to lubricate the rotation pinion and the ball-bearing ring, rotate the upper structure slowly and grease every 90°.**

BALL-BEARING RING AND BLADE LUBRICATION POINTS

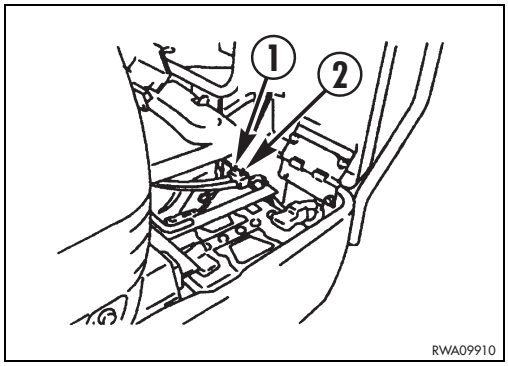

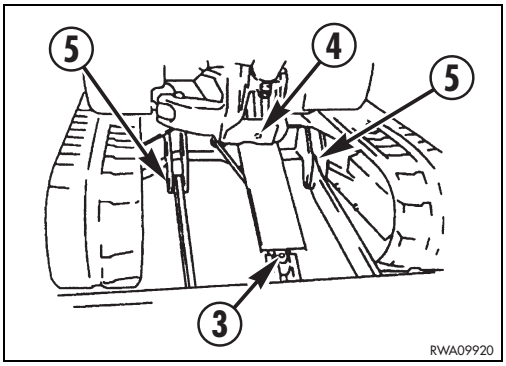

1 - Ball-bearing ring	(1 point)
2 - Ball-bearing ring pinion	(1 point)
3 - Blade cylinder base pin	(1 point)
4 - Blade cylinder head pin	(1 point)
5 - Blade fulcrum pin	(2 points)

Downloaded from www.Manualslib.com manuals search engine

https://truckmanualshub.com/

EQUIPMENT LUBRICATION POINTS

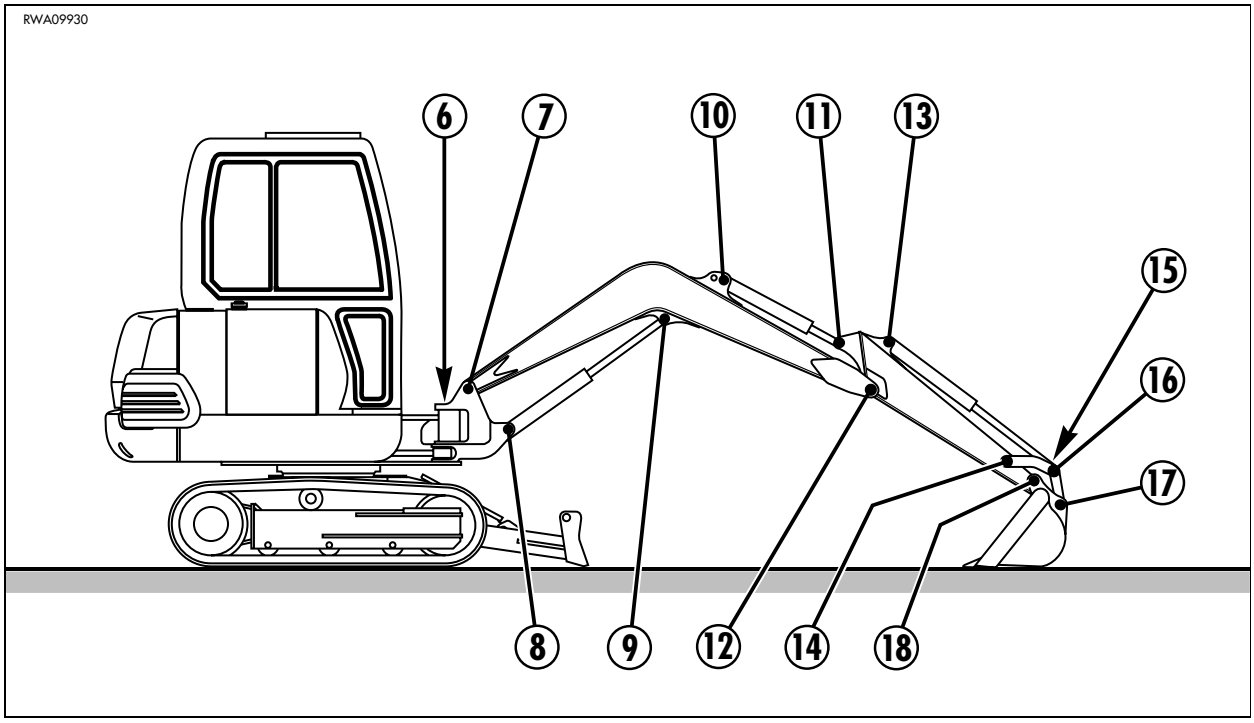

6 - Boom swing fulcrum pin (for PC20R only)	(2 points)
6 - Boom swing fulcrum pin (for PC27R only)	(1 point)
7 - Boom fulcrum pin (1 point)	(1 point)
8 - Lifting cylinder base pin	(1 point)
9 - Lifting cylinder head pin	(1 point)
10 - Arm cylinder base pin	(1 point)
11 - Arm cylinder head pin	(1 point)
12 - Arm fulcrum pin	(1 point)
13 - Bucket cylinder base pin	(1 point)
14 - Lever fulcrum pin	(1 point)
15 - Bucket cylinder head pin	(1 point)
16 - Tie-rod-lever coupling pin	(1 point)
17 - Tie-rod-bucket coupling pin (for PC20R only)	(1 point)
17 - Tie-rod-bucket coupling pin (for PC27R only)	(2 points)
18 - Bucket fulcrum pin	(1 point)

Downloaded from www.Manualslib.com manuals search engine

https://truckmanualshub.com/

4.7.6 MAINTENANCE AFTER THE FIRST 250 HOURS OF OPERATION

These maintenance operations must be carried out after the first 250 hours of operation, together with those to be carried out “EVERY 250 HOURS”.

- CHANGE THE OIL IN THE TRAVEL REDUCTION GEARS
- CHECK AND ADJUST THE ENGINE VALVE CLEARANCE

For further details on the various maintenance operations, see the sections “4.7.10 MAINTENANCE EVERY 1000 HOURS OF OPERATION” and “4.7.11 MAINTENANCE EVERY 2000 HOURS OF OPERATION”.

For the inspection and adjustment, contact your Komatsu Utility Dealer.

4.7.7 MAINTENANCE EVERY 250 HOURS OF OPERATION

4.7.7.a ADJUSTING THE FAN BELT TENSION

The fan belt can be reached by opening the engine hood (See “3.5.1 ENGINE HOOD”).
The check is manual: press the belt with your thumb on the indicated point with a force equal to approx. 6 kg; the resulting deflection must be approximately 10÷15 mm.
If the deflection exceeds this value, loosen the nuts (1) and (2) that fasten the alternator (3) and, with a lever inserted between the motor block and frame, make the alternator slide.
Lock the nuts and check again.
Use a 13 mm spanner.

A - Fan pulley

B - Driving shaft pulley

C - Alternator pulley

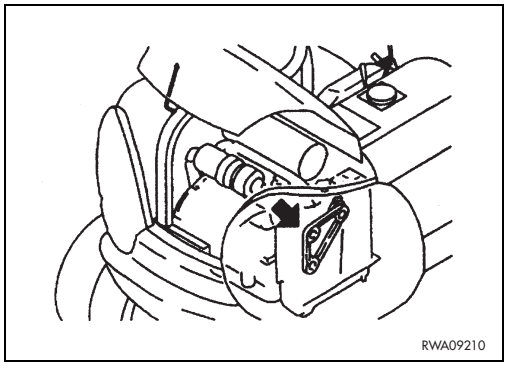

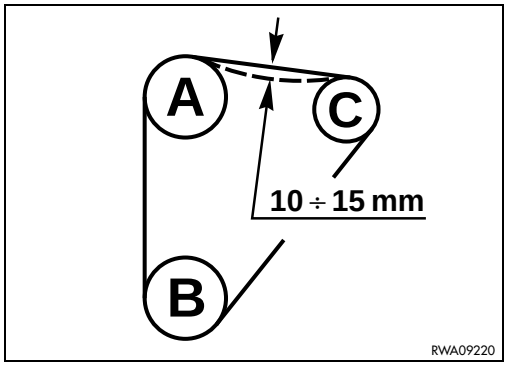

IMPORTANT

- **If the belt is worn, change it and check the tension again after a few hours of operation.**

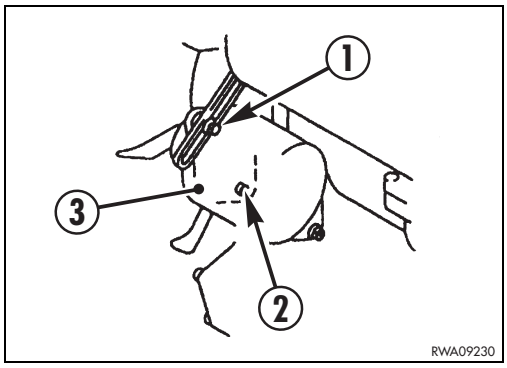

Downloaded from www.Manualslib.com manuals search engine

https://truckmanualshub.com/

4.7.7.b CHECKING THE BATTERY ELECTROLYTE LEVEL

DANGER

- **Check the level only after stopping the engine and if necessary add distilled water only before starting work.**
- **Always wear safety goggles and waterproof gloves.**
- **To prevent gas explosions, do not use naked flames, do not smoke and avoid producing sparks due to short circuits.**
- **The battery electrolyte is dangerous; if it comes in contact with the eyes or skin, rinse with plenty of water and consult a doctor without delay.**

The battery (1) can be reached by opening the right door (2).
The electrolyte level in each cell must be about 6 mm above the plate edge; if necessary, top up with distilled water only.
If, on the contrary, the level is low because some fluid has been spilled, add diluted sulphuric acid until reaching the concentration suitable for the ambient temperature.
(See “3.11.3 BATTERY”).

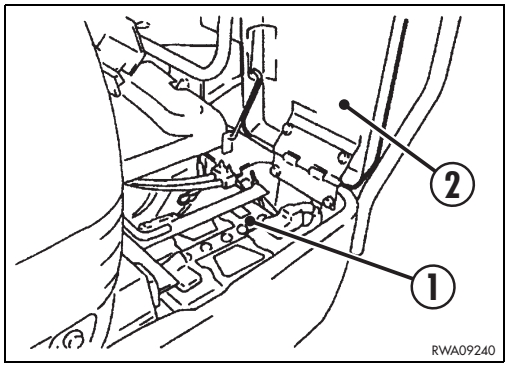

IMPORTANT

- **It is advisable to add distilled water before starting work, in order to prevent it from freezing.**
- **Before putting back the cell plugs, make sure that the breather holes are not clogged.**
- **Make sure that the connection terminals are not oxidized; if necessary, clean them and cover them with anti-oxidation grease.**

4.7.7.c CHECKING THE OIL LEVEL IN THE TRAVEL REDUCTION GEARS

DANGER

- **As soon as the machine has been stopped the oil is very hot; let it cool down until it reaches 40÷50°C before carrying out the check.**

This check must be carried out on each reduction gear positioned with the drain plug (1) downward and aligned with the level plug (2) on the vertical axis.
If necessary, move the machine slightly until reaching the required position, which must absolutely be respected in order to carry out a precise check.
This check is visual: the oil must reach the hole (2); otherwise, top up following the procedures described in paragraph “4.7.10.a CHANGING THE TRAVEL REDUCTION GEAR OIL” and using the prescribed oil.
(See “4.3 FUEL, COOLANT AND LUBRICANTS”).
Use a 8 mm setscrew spanner.

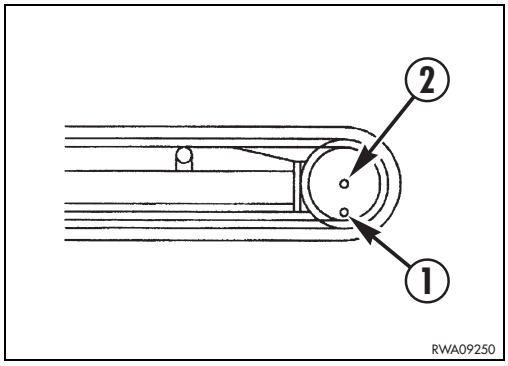

Downloaded from www.Manualslib.com manuals search engine

https://truckmanualshub.com/

4.7.7.d CHANGING THE HYDRAULIC SYSTEM OIL FILTER

DANGER

- **Soon after the machine has been stopped the hydraulic oil is very hot; let it cool down until it reaches a temperature of 40÷45°C before changing it.**
- **The hydraulic system is pressurized; loosen the filling cap slowly to release the residual pressure.**
- **Oils, filters, the coolant and the battery are considered special waste and must be collected and disposed of according to the anti-pollution regulations in force.**

The filter is positioned on the hydraulic system drain outlet and blocks the metal particles that come off the various components due to their wear.
The filter can be reached after removing the screws (1) and the side cover (2); use a 17 mm hexagon spanner.
To change the filter, proceed as follows:

1 - Slowly loosen the filling cap (3) in order to release the residual pressure from the tank.
Use a 24 mm hexagon spanner.

2 - Unscrew the used filter (4) with the special spanner provided and throw it away.

3 - Clean the contact surface between the seal and the filter support, lubricate the seal of the new filter and screw it until it touches the support.

4 - Give another half turn by hand.

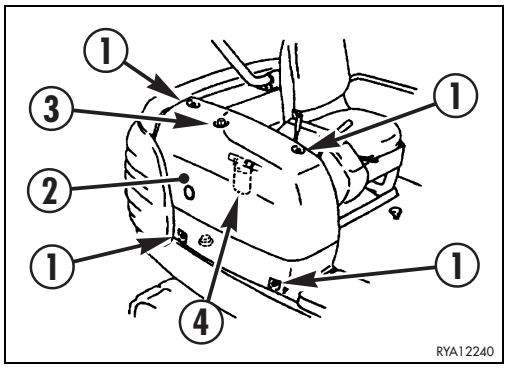

IMPORTANT

- **Do not use the spanner to lock the filter, in order not to damage it and not to cause oil leakages.**

5 - Extend the boom, arm and bucket cylinders completely, as indicated in the figure, and remove the filling cap (3).
Put back the cap and pressurize the inside of the tank lowering the equipment to the ground.

6 - Put back the side cover (2).

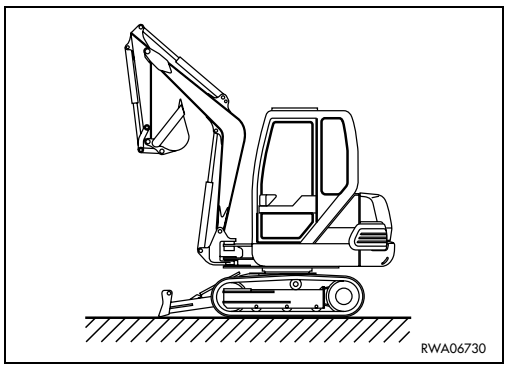

IMPORTANT

- **The hydraulic oil of the machines equipped with demolition hammer deteriorates more rapidly than the oil of the machines used for simple digging operations.**
On new machines, change the filter after the first 100-150 hours of operation and for the successive changes keep to the indications given in the table beside.
- **If the machine contains synthetic biodegradable oil type HEES, the filter must be changed after the first 50 hours of operation.**

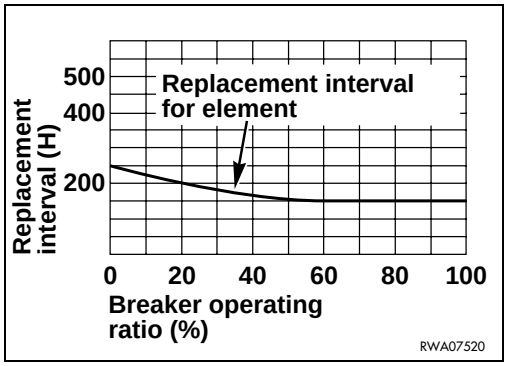

Downloaded from www.Manualslib.com manuals search engine

https://truckmanualshub.com/

4.7.7.e CHANGING THE ENGINE OIL

DANGER

- **Soon after the machine has been stopped the engine oil is very hot and may cause burns; let the engine cool down until it reaches a temperature of 40÷45°C before draining the oil.**
- **The oil that may be spilled during the change makes the ground slippery, therefore, use anti-slip shoes and immediately remove any trace of oil from the floor.**
- **Oils, filters, the coolant and the battery are considered special waste and must be collected and disposed of according to the anti-pollution regulations in force.**

Proceed as follows:

1 - Open the engine hood (See “3.5.1 ENGINE HOOD”).

2 - Remove the drain plug (1) of the oil pan, gathering the used oil that flows out into a container with suitable capacity. (Use a 19 mm hexagon spanner).
While the oil flows out, remove the filling cap (2), so that the oil can flow freely.

3 - Tighten the plug (1) onto the pan and pour the prescribed quantity of new oil, using the dipstick (3) to make sure that the oil reaches the MAX. level.
To top up, use oil suitable for the ambient temperature (See “4.3 FUEL, COOLANT AND LUBRICANTS”).

4 - Put back the filling cap (2), start the engine, let it run for 5 minutes and then stop it.
Check the level again and top up if necessary.

5 - Close the engine hood.

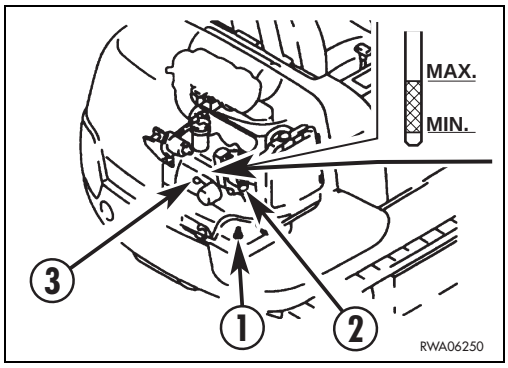

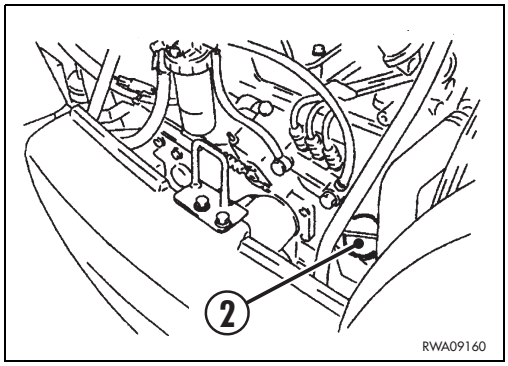

Downloaded from www.Manualslib.com manuals search engine

https://truckmanualshub.com/

4.7.8 MAINTENANCE AFTER THE FIRST 500 HOURS OF OPERATION (Only for machines in which the synthetic biodegradable oil type HEES is used)

The following maintenance operation must be carried out after the first 500 hours of operation, together with the maintenance operations to be carried out “EVERY 500 HOURS”.

- HYDRAULIC OIL CHANGE AND SUCTION FILTER CLEANING

For further details on the various maintenance operations, see section “EVERY 2000 HOURS”.

4.7.9 MAINTENANCE EVERY 500 HOURS OF OPERATION

These operations must be carried out together with those to be carried out every 100 and 250 HOURS.

4.7.9.a CHANGING THE ENGINE OIL FILTER

DANGER

- **Soon after the machine has been stopped the engine oil is very hot and may cause burns; let the engine cool down until it reaches a temperature of 40÷45°C before draining the oil.**
- **The oil that may be spilled during the change makes the ground slippery, therefore, use anti-slip shoes and immediately remove any trace of oil from the floor.**
- **Oils, filters, the coolant and the battery are considered special waste and must be collected and disposed of according to the anti-pollution regulations in force.**

This operation must be carried out every two oil changes.
Proceed as follows:

1 - Drain the engine oil (See “4.7.7.e CHANGING THE ENGINE OIL”).

2 - Unscrew the used filter (1) with the special spanner provided and throw it away.

3 - Clean the contact surface between the seal and the filter support.

4 - Lubricate the seal of the new filter and screw thoroughly.

5 - Give another half turn by hand.

6 - Fill the engine with new oil and complete the operations as described at point “4.7.7.e CHANGING THE ENGINE OIL”).

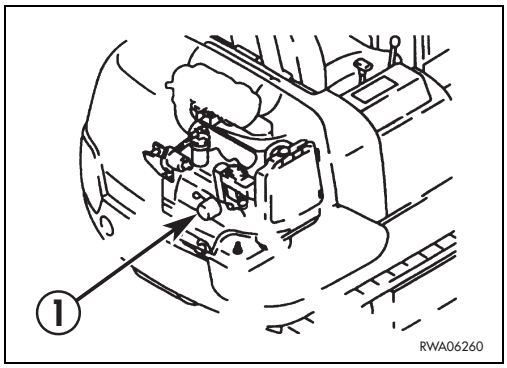

Start the engine, make sure that there are no leakages and that the oil pressure warning light goes out.

IMPORTANT

- **Do not use the spanner to lock the filter, since it may be damaged and cause oil leakages.**

Downloaded from www.Manualslib.com manuals search engine

https://truckmanualshub.com/

4.7.9.b CHANGING THE FUEL FILTER

DANGER

- **Change the filtering element after work, when the engine has cooled down to 40÷45°C.**
- **When these operations are carried out, fuel may be spilled; clean the dirty areas immediately, in order to prevent any risk of slipping or fire.**
- **Oils, filters, the coolant and the battery are considered special waste and must be collected and disposed of according to the anti-pollution regulations in force.**

The fuel filter can be reached after opening the engine hood (See “3.5.1 ENGINE HOOD”).

FUEL FILTER

1 - Close the fuel tap (1).

2 - Loosen the metal ring (2) by means of the special spanner provided, remove the container (3) and extract the filtering element.

3 - Clean the sealing surface of the cover (4) and install the new filter in the container (3); install the O ring of the cover and smear it with some grease.

4 - Reassemble the whole unit, open the fuel tap (1) and bleed the fuel supply circuit after shifting the accelerator lever to the idling position.

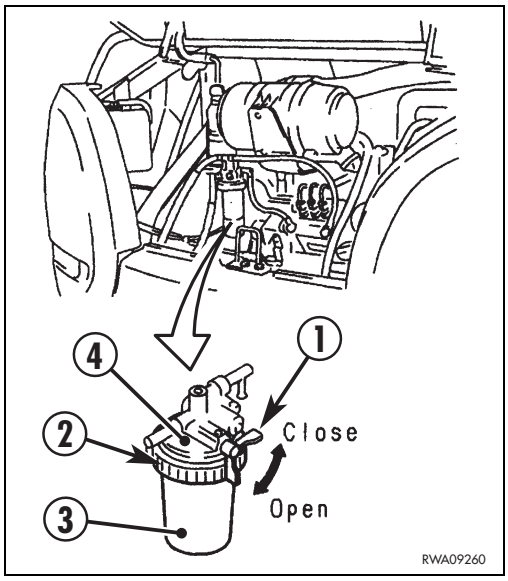

BLEEDING THE CIRCUIT

DANGER

- **The engine may start during the bleeding of the circuit; make sure that there is no one near the machine.**

After filling the tank, turn the ignition key to position «⏻» and let the starter run for approximately 15÷20 seconds in order to bleed the fuel supply circuit.

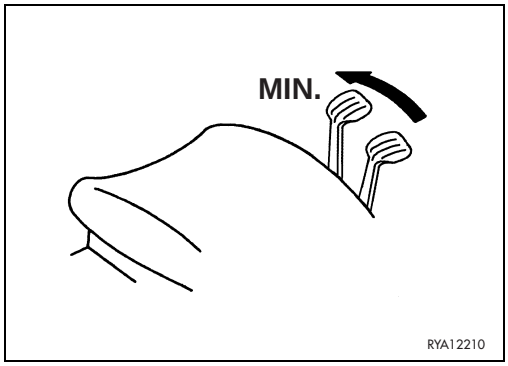

IMPORTANT

- **If the engine starts without problems and then stops or works irregularly, check if there is air in the circuit; if so, check the tightness of the fuel filter and of the fuel pump prefilter.**
- **After all the fuel has run out, bleed the circuit by proceeding as described above.**

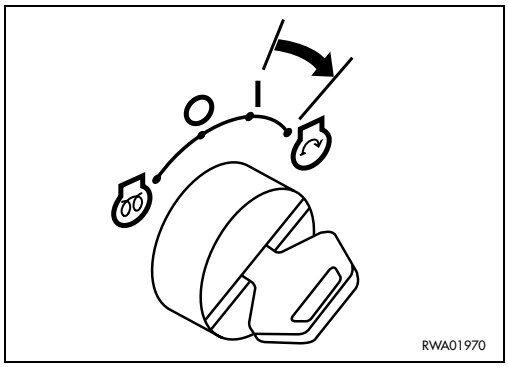

Downloaded from www.Manualslib.com manuals search engine

https://truckmanualshub.com/

4.7.9.c CHANGING THE FUEL PUMP PRECLEANER

DANGER

- **Change the precleaner after work, when the engine has cooled down to 40÷45°C.**
- **When these operations are carried out, fuel may be spilled; clean the dirty areas immediately, in order to prevent any risk of slipping or fire.**
- **Oils, filters, the coolant and the battery are considered special waste and must be collected and disposed of according to the anti-pollution regulations in force.**

1 - Place a container under the precleaner (1), to gather the fuel.

2 - Shift the accelerator lever to the idling position.

3 - Remove the precleaner from the clamp (2).

4 - Remove the clamp (3) and disconnect the pipe (4) from the precleaner.

5 - Remove the clamp (5), disconnect the pipe (5) from the used precleaner and throw the latter away.

6 - Connect the pipes (4) and (6) to a new precleaner and fasten them with the clamps (3) and (5).

7 - Install the precleaner in the clamp (2) and bleed the fuel supply circuit (See “4.7.9.b CHANGING THE FUEL FILTER”).

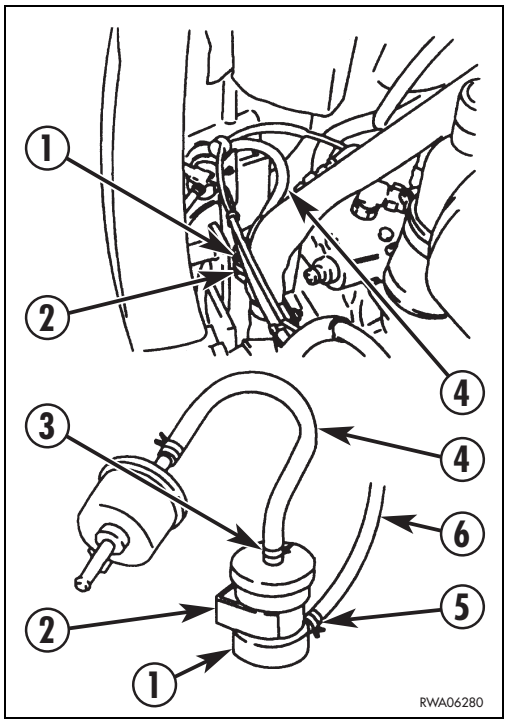

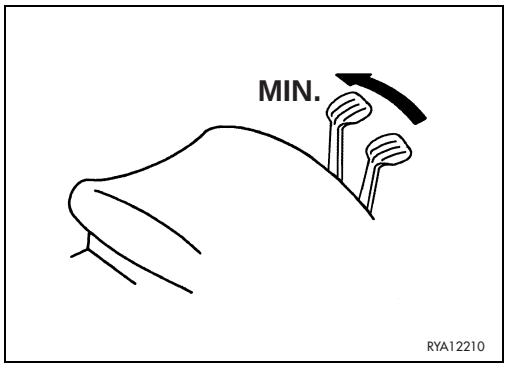

Downloaded from www.Manualslib.com manuals search engine

https://truckmanualshub.com/

4.7.9.d CLEANING THE OUTSIDE OF THE RADIATORS

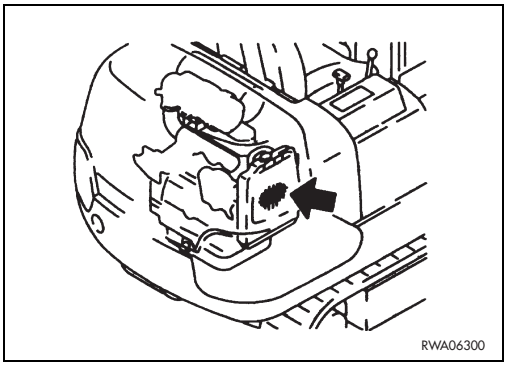

DANGER

- **If compressed air, steam or water are directed against a person, they may cause injuries.**
  Always wear an eye shield and safety shoes.

The radiator and the heat exchanger can be reached after opening the engine hood (see "3.5.1 ENGINE HOOD") and the lateral counterweight (see "3.5.2 RIGHT COUNTERWEIGHT").
The outside of the radiators must be cleaned with a jet of compressed air and, if necessary, with a low-pressure water or steam washing cycle; the specific products available on the market can be certainly used, provided that the instructions given on the package are followed and that the washed parts are carefully dried at the end of the operations.

IMPORTANT

- **Do not use products containing oily substances, even if in slight quantities, since these facilitate the adhesion of dust, which affects the heat exchange adversely.**
- **Clean the outside of the radiators whenever the radiator or the heat exchanger are dirtied, even if accidentally, with oil, diesel oil, greasy or oily substances.**
- **If the machine is used in dusty places, clean the radiator and the exchanger more frequently, in order to avoid any clogging of the fins.**

Downloaded from www.Manualslib.com manuals search engine

https://truckmanualshub.com/

4.7.9.e DRAINING THE HYDRAULIC OIL TANK (Only for machines in which the synthetic biodegradable oil type HEES is used)

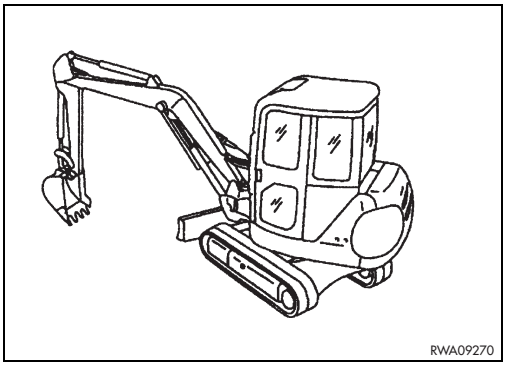

DANGER

- **Retract the bucket and arm cylinder completely, lower the bucket teeth to the ground and, after stopping the engine, release the residual pressures from the work equipment circuits (by operating the controls more than once) and from the tank (by slowly loosening the filling cap).**
- **Let the oil cool down until it reaches 4045°C before carrying out any maintenance operation.**
- **Immediately clean any area dirty with oil.**

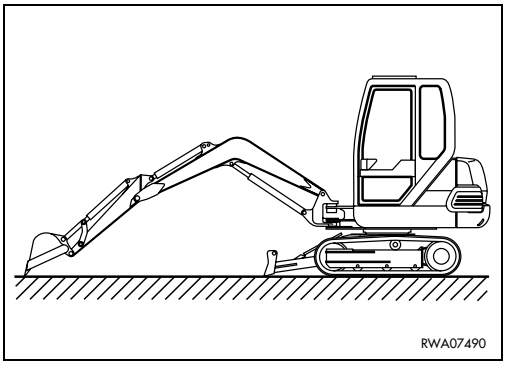

1 - Rotate the upper structure of 45°, in such a way as to leave the lower part of the hydraulic oil tank free from the tracks.

2 - Retract the bucket and arm cylinder completely and lower the boom until the bucket teeth touch the ground.

3 - Lower the blade to the ground.

4 - Stop the engine and eliminate the residual pressures present in the equipment (by moving the controls several times).

5 - Slowly loosen the filling cap (1) in order to release the residual pressure that may be present in the tank.
Use a 24 mm hexagon spanner.

6 - Remove the drain plug (2) until the condensate has flown out of the tank completely.
Use a 32 mm spanner.

7 - Put back the filling cap (1).

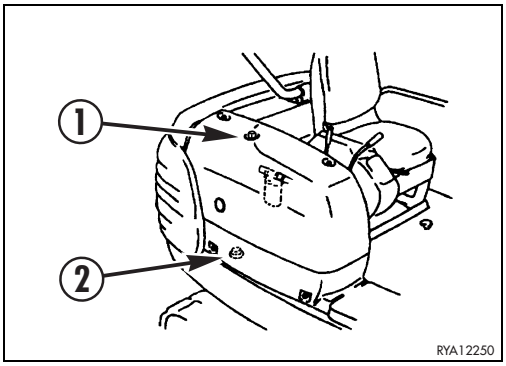

IMPORTANT

- **The draining of the tank must be carried out at temperatures exceeding 0°C, before starting the engine; when the temperature is below 0°C, the hydraulic oil tank must be drained at the end of work, or in any case when the temperature of the machine is sufficiently high to prevent the condensate from freezing and allow it to flow out of the tank without problems.**

Downloaded from www.Manualslib.com manuals search engine

https://truckmanualshub.com/

4.7.10 MAINTENANCE EVERY 1000 HOURS OF OPERATION

These operations must be carried out together with those to be carried out every 100, 250, 500 HOURS.

4.7.10.a CHANGING THE OIL IN THE TRAVEL REDUCTION GEARS

DANGER

- **Soon after the machine has been stopped the engine oil is very hot; let the engine cool down until it reaches a temperature of 40÷45°C before changing the oil.**
- **Oils, filters, the coolant and the battery are considered special waste and must be collected and disposed of according to the anti-pollution regulations in force.**

This operation must be carried out with the machine on level ground at a temperature of 40÷45°C, so that the oil is more fluid and can be drained easily together with the suspended solid particles.

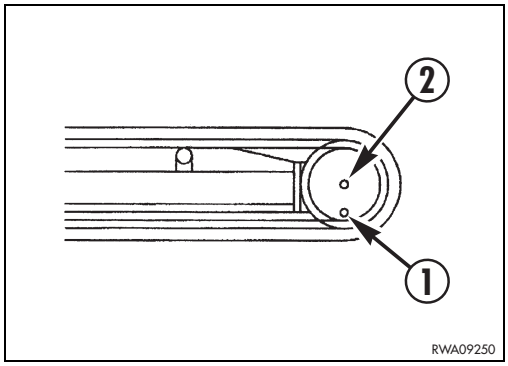

1 - Move the machine until the drain plug (1) is in low position and aligned with the level plug (2) on the vertical axis.

2 - Remove the drain plug (1) and let the used oil flow out completely, gathering it into a container with suitable capacity. While the oil flows out, remove the level plug (2). Use a 8 mm setscrew spanner.

3 - After draining the oil, put back the plug (1) and pour new oil of the prescribed type through the hole (2) until reaching the lower edge of the hole itself.

4 - Put back the plug (2).

Carry out some movements, stop the machine and check the levels again.
Use only the prescribed oil.
(See “4.3 FUEL, COOLANT AND LUBRICANTS”).

Downloaded from www.Manualslib.com manuals search engine

https://truckmanualshub.com/

4.7.11 MAINTENANCE EVERY 2000 HOURS OF OPERATION

Carry out these operations together with those to be performed every 100, 250, 500 and 1000 HOURS.

4.7.11.a CHANGING THE HYDRAULIC SYSTEM OIL AND CLEANING THE SUCTION FILTER

CAUTION

- **On machines containing synthetic biodegradable hydraulic oil type HEES, carry out the change after the first 500 hours of operation and successively every 2000 hours, and in any case at least once a year.**

DANGER

- **Retract the bucket and arm cylinder completely, lower the bucket teeth to the ground and, after stopping the engine, release the residual pressures from the work equipment circuits (by operating the controls more than once) and from the tank (by slowly loosening the filling cap).**
- **Let the oil cool down until it reaches 4045°C before carrying out any maintenance operation.**
- **Immediately clean any area dirty with oil.**
- **Oils, filters, the coolant and the battery are considered special waste and must be collected and disposed of according to the anti-pollution regulations in force.**

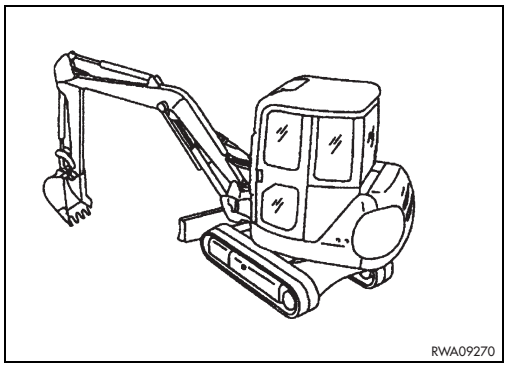

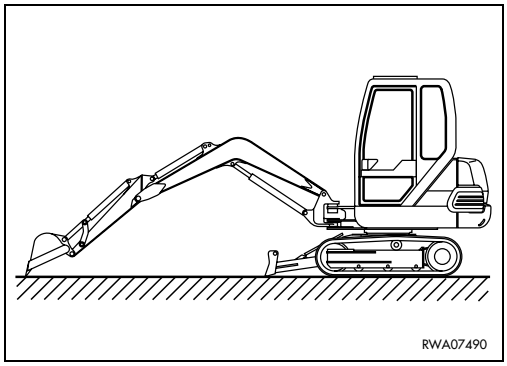

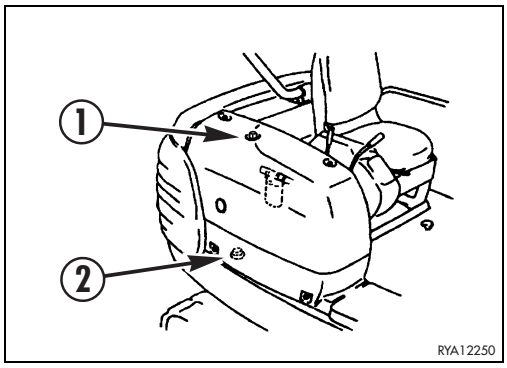

1 - Rotate the upper structure of 45°, in such a way as to leave the lower part of the hydraulic oil tank free from the tracks.

2 - Retract the bucket and arm cylinder completely and lower the boom until the bucket teeth touch the ground.

3 - Lower the blade to the ground.

4 - Stop the engine and eliminate the residual pressures present in the equipment (by moving the controls several times).

5 - Slowly loosen the filling cap (1) in order to release the residual pressure.
Use a 24 mm hexagon spanner.

6 - Remove the drain plug (2) and let the oil flow out, gathering it into a container with suitable capacity.
Use a 32 mm hexagon spanner.

Downloaded from www.Manualslib.com manuals search engine

https://truckmanualshub.com/

7 - Loosen the clamp (3) that holds the suction pipe and remove the screws (4). Remove the flange (5) and clean the suction filter (6).
Use a 13 mm hexagon spanner.

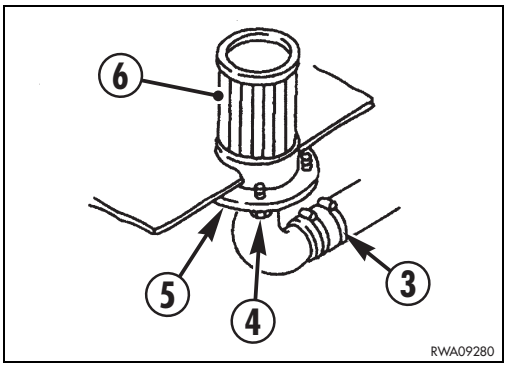

IMPORTANT

- **Carefully check the filtering element grid and if it is not in perfect conditions, change it.**

8 - Put back the drain plug (2), the lower flange (5) with the filter (6), making sure that the gasket and the clamp (3) of the suction pipe are in good conditions.

9 - Fill with the prescribed oil until reaching the correct level (7). Use oil of the prescribed type only (See “26. FUEL, COOLANT AND LUBRICANTS”).

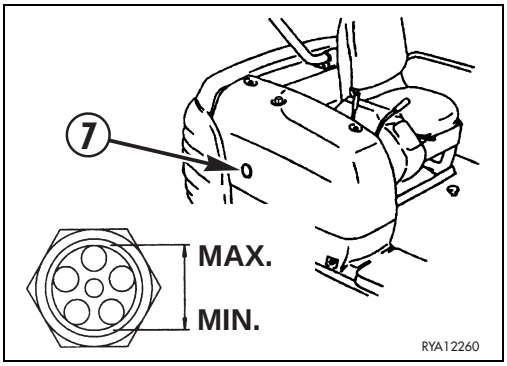

10-Open the engine hood and loosen the drain screw (8) positioned on the hydraulic pump until no air bubbles can be noticed in the oil flowing out of the screw.
Use a 10 mm setscrew spanner (for model PC20R only).
Use a 19 mm hexagon spanner (for model PC27R only).
After bleeding the oil, tighten the screw (8) and close the engine hood. Put back the filling cap (1).

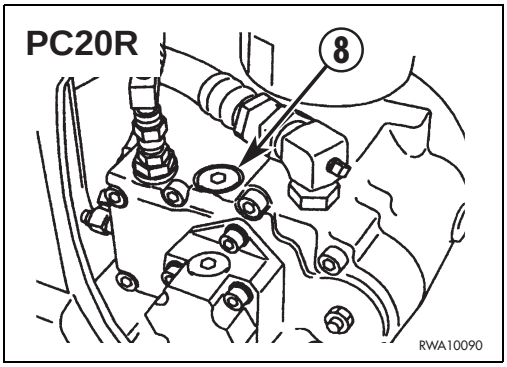

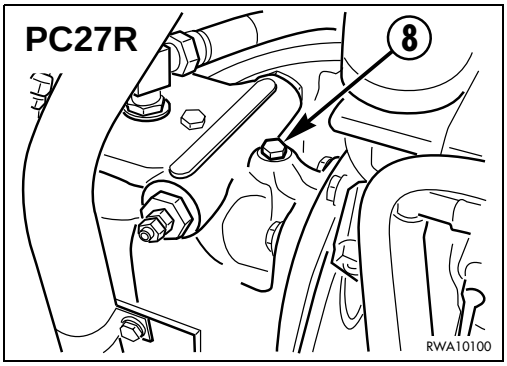

Downloaded from www.Manualslib.com manuals search engine

https://truckmanualshub.com/

11- Extend the boom, arm and bucket cylinders completely as indicated in the figure and remove the filling cap (1).
Put back the cap and pressurize the inside of the tank lowering the equipment to the ground.

12- Make sure that all the control levers are in neutral and let the engine idle for 2÷3 minutes before operating the work equipment.
Move each piston more than once in order to deaerate the system; check the level again and top up if necessary.

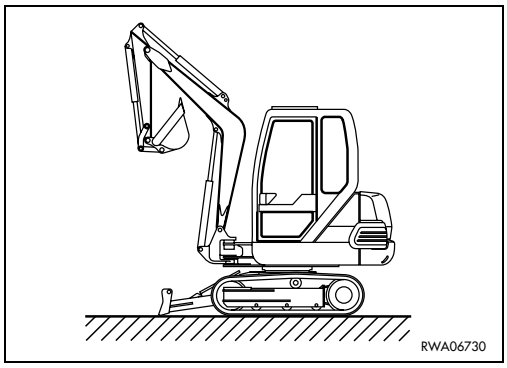

CAUTION

- **Do not start the engine with empty tank, since this would certainly damage the pump.**

IMPORTANT

- **The hydraulic oil of the machines equipped with demolition hammer deteriorates more rapidly than the oil of the machines used for simple digging operations.**
Perform the oil changes according to the indications given in the table beside.

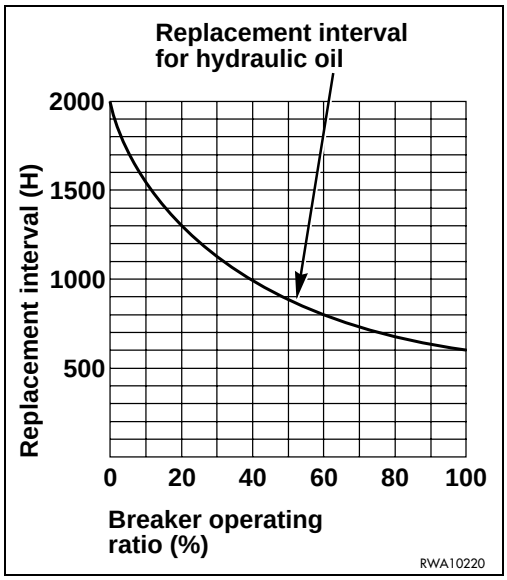

Downloaded from www.Manualslib.com manuals search engine

https://truckmanualshub.com/

4.7.11.b CHANGING THE COOLANT

DANGER

- **Soon after the machine has been stopped the coolant is very hot and under pressure and it may cause serious burns; let the engine cool down until it reaches approximately 40÷45°C before changing the coolant.**
- **Slowly loosen the radiator cap, in order to release the residual pressure.**
- **Oils, filters, the coolant and the battery are considered special waste and must be collected and disposed of according to the anti-pollution regulations in force.**

IMPORTANT

- **The following operations refer to the change of permanent coolants; if the coolant is water or water with antifreeze, which is used according to the season, it is necessary to wash the cooling circuit in order to eliminate any encrustation. (See “4.7.1.a WASHING THE COOLING CIRCUIT”).**

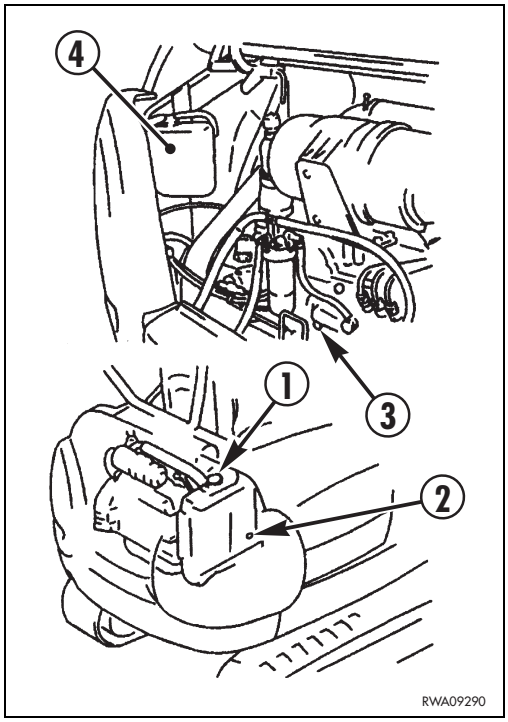

1 - Open the engine hood (See “3.5.1 ENGINE HOOD”).

2 - Rotate the right counterweight to the open position (see "3.5.2 RIGHT COUNTERWEIGHT").

3 - Loosen and remove the upper cap (1) of the radiator.

4 - Open the drain cock (2) of the radiator, remove the drain plug (3) positioned on the engine block and let the fluid flow out. Use a 17 mm hexagon spanner.
While the fluid flows out, drain the coolant tank (4).

5 - Close the drain cock (2), put back the plug (3) on the engine block and fill the radiator with new fluid (See “4.3 FUEL, COOLANT AND LUBRICANTS”).

6 - Start the engine and let it idle for a few minutes; check the level again and if necessary top up before putting back the upper cap (1).

7 - Fill the tank (4) until reaching the maximum level.

8 - Rotate the lateral counterweight to the closed position, close the engine hood and put back the inspection cover (1)

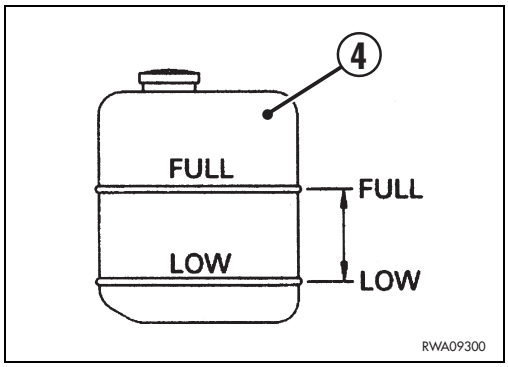

Downloaded from www.Manualslib.com manuals search engine

https://truckmanualshub.com/

4.7.11.c CHECKING AND ADJUSTING THE ENGINE VALVE CLEARANCE

Since the check and adjustment of the engine valve clearance require the use of special tools, have these operations carried out by your Komatsu Utility Dealer.

4.7.11.d CHECKING THE ALTERNATOR AND THE STARTER

For any inspection and/or repair, contact your Komatsu Utility Dealer.
If the engine is started frequently, have an inspection carried out every 1000 hours of operation.

Downloaded from www.Manualslib.com manuals search engine

https://truckmanualshub.com/

Downloaded from www.Manualslib.com manuals search engine

https://truckmanualshub.com/

TECHNICAL SPECIFICATIONS

Downloaded from www.Manualslib.com manuals search engine

https://truckmanualshub.com/

5.1 TECHNICAL DATA

5.1.1 STANDARD OVERALL DIMENSIONS (for model PC20R only)

MACHINE WITH CAB

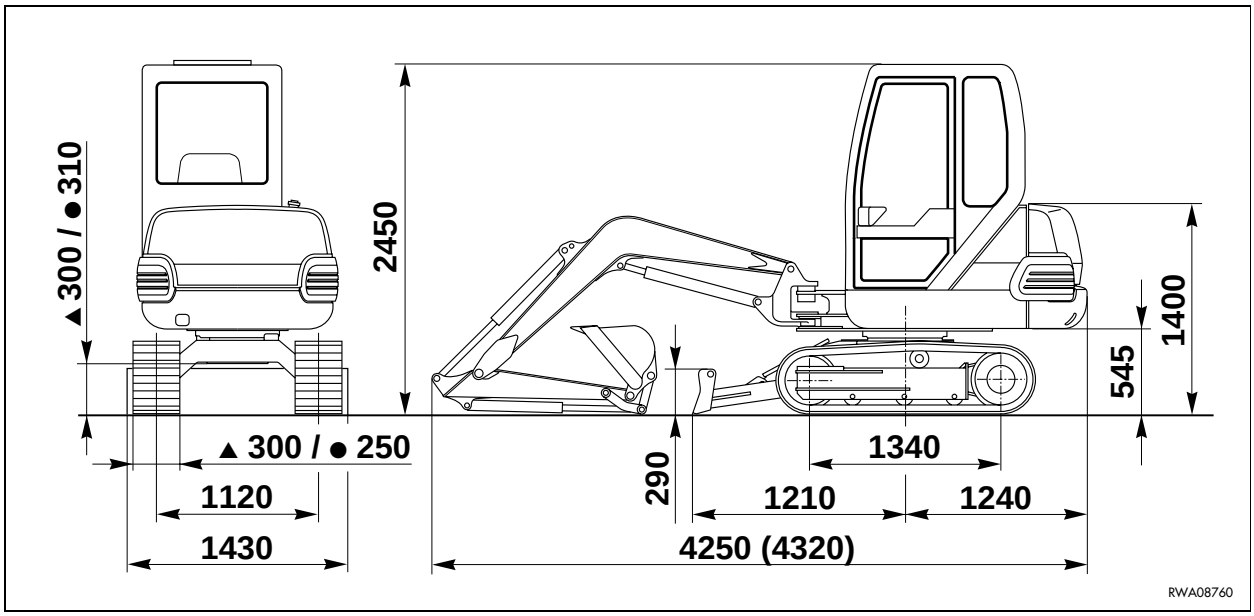

( ) Dimensions with long digging arm (L=1320 mm)
▲ Steel tracks
● Rubber tracks

MACHINE WITH CANOPY

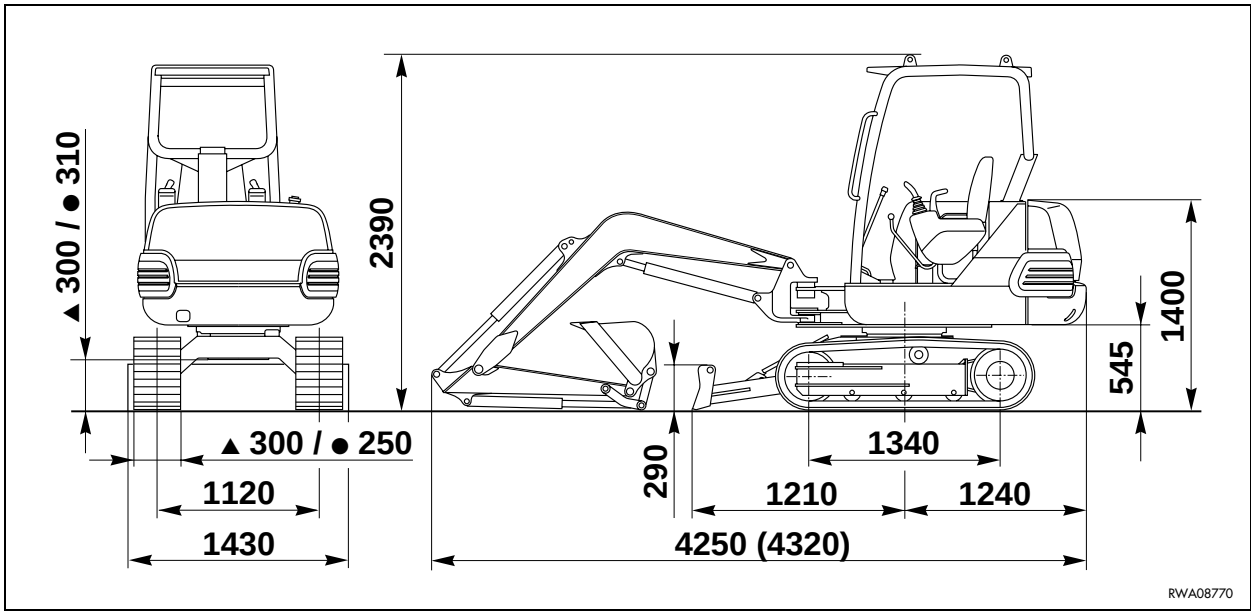

( ) Dimensions with long digging arm (L=1320 mm)
▲ Steel tracks
● Rubber tracks

Downloaded from www.Manualslib.com manuals search engine

https://truckmanualshub.com/

5.1.2 TECHNICAL CHARACTERISTICS PC20R

TOTAL MASS

Total mass with TOPS-FOPS canopy and steel shoes	kg	2525
Total mass with TOPS cab and steel shoes	kg	2675
Total mass with TOPS-FOPS canopy and rubber tracks	kg	2385
Total mass with TOPS cab and rubber tracks	kg	2535

STANDARD BUCKET CAPACITY

Capacity (SAE)	m^3	0.07

ENGINE

Komatsu diesel engine model		3D78A-3FAE
Maximum power (2600 rpm EEC 80/1269)	kW	17
Maximum torque (1600 rpm EEC 80/1269)	Nm	72.5

ELECTRICAL SYSTEM

Alternator		12V
Electrical output		40 A
Earthing		negative
Battery		80 Ah - 12V
Starter	kW	1.2

UPPER STRUCTURE ROTATION

Upper structure rotation speed	rpm	9.0

SPEEDS

Travel speed with steel shoes	km/h	2.2
Travel speed with rubber tracks	km/h	2.2
Travel speed with increase and steel shoes	km/h	4.3
Travel speed with increase and rubber tracks	km/h	4.3

Downloaded from www.Manualslib.com manuals search engine

https://truckmanualshub.com/

5.1.3 STANDARD OVERALL DIMENSIONS (for model PC27R only)

MACHINE WITH CAB

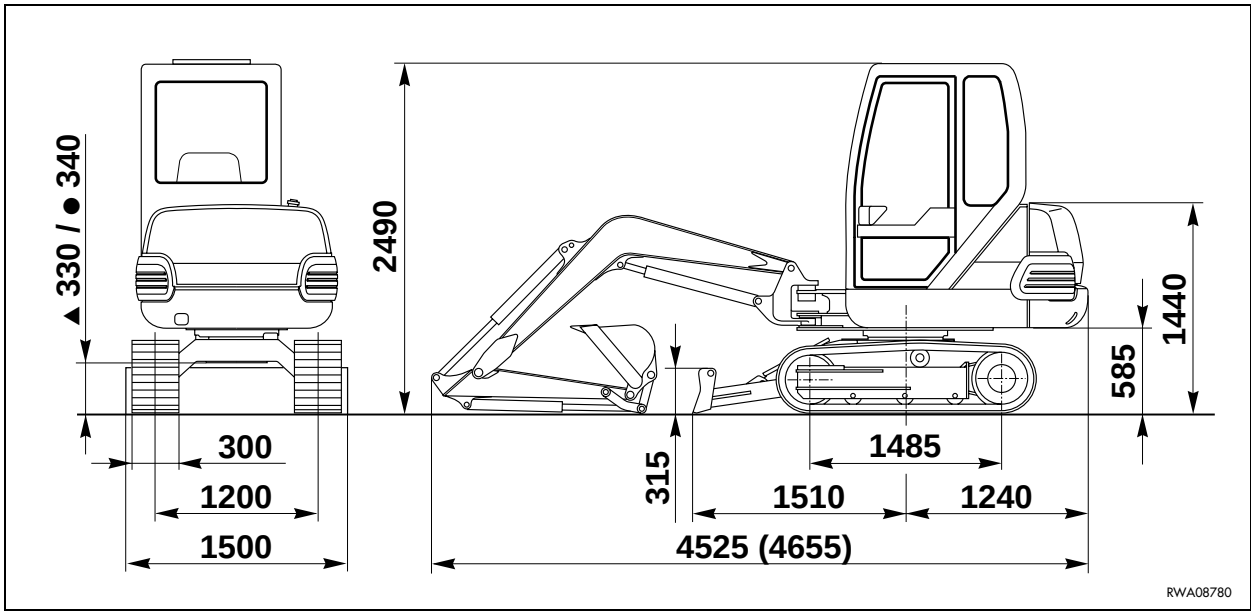

( ) Dimensions with long digging arm (L=1500 mm)

▲ Steel tracks

● Rubber tracks

MACHINE WITH CANOPY

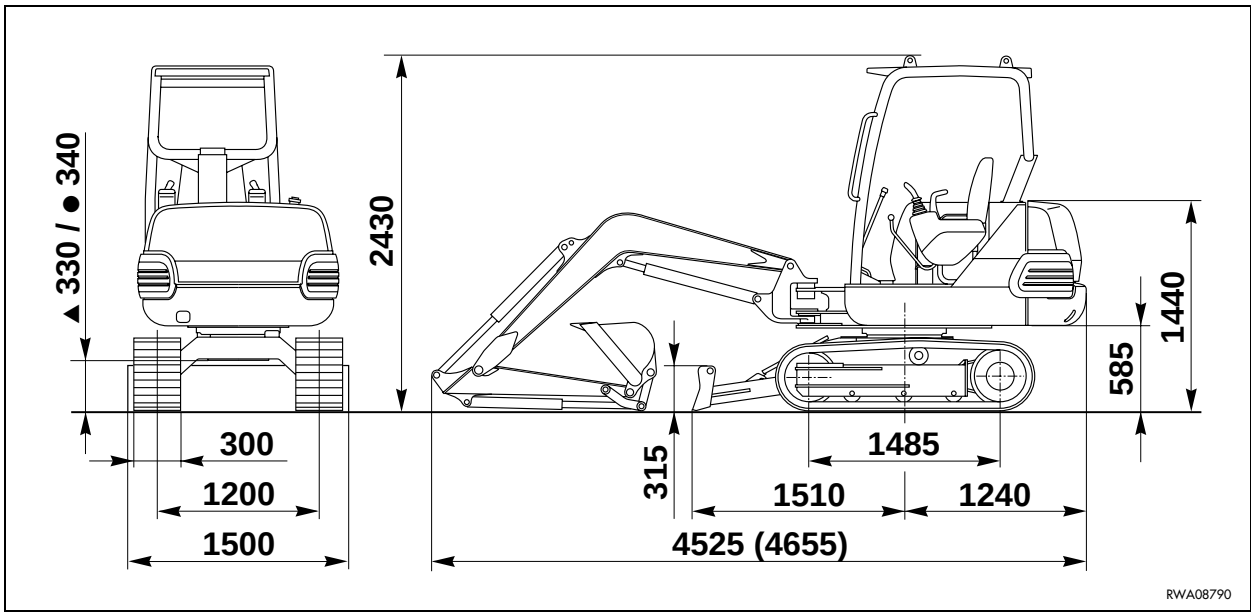

( ) Dimensions with long digging arm (L=1500 mm)

▲ Steel tracks

● Rubber tracks

Downloaded from www.Manualslib.com manuals search engine

https://truckmanualshub.com/

5.1.4 TECHNICAL CHARACTERISTICS PC27R

TOTAL MASS

Total mass with TOPS-FOPS canopy and steel shoes	kg	2925
Total mass with TOPS cab and steel shoes	kg	3065
Total mass with TOPS-FOPS canopy and rubber tracks	kg	2830
Total mass with TOPS cab and rubber tracks	kg	2970

STANDARD BUCKET CAPACITY

Capacity (SAE)	m^3	0.08

ENGINE

Komatsu diesel engine model		3D82A-3FAE
Maximum power (2600 rpm EEC 80/1269)	kW	19
Maximum torque (1600 rpm EEC 80/1269)	Nm	81.5

ELECTRICAL SYSTEM

Alternator		12V
Electrical output		40 A
Earthing		negative
Battery		80 Ah - 12V
Starter	kW	1.2

UPPER STRUCTURE ROTATION

Upper structure rotation speed	rpm	9.6

SPEEDS

Travel speed with steel shoes	km/h	2.2
Travel speed with rubber tracks	km/h	2.1
Travel speed with increase and steel shoes	km/h	4.4
Travel speed with increase and rubber tracks	km/h	4.2

Downloaded from www.Manualslib.com manuals search engine

https://truckmanualshub.com/

5.1.5 LIFTING CAPACITY WITH CAB (for model PC20R only)

CAUTION

- **According to the standard EN474-5 (§ 4.1.7.5), this machine if not equipped with suitable devices is not allowed to lift more than 1000 kg.**
- **Do not attempt to lift loads unless the machine is standing on firm, level ground.**

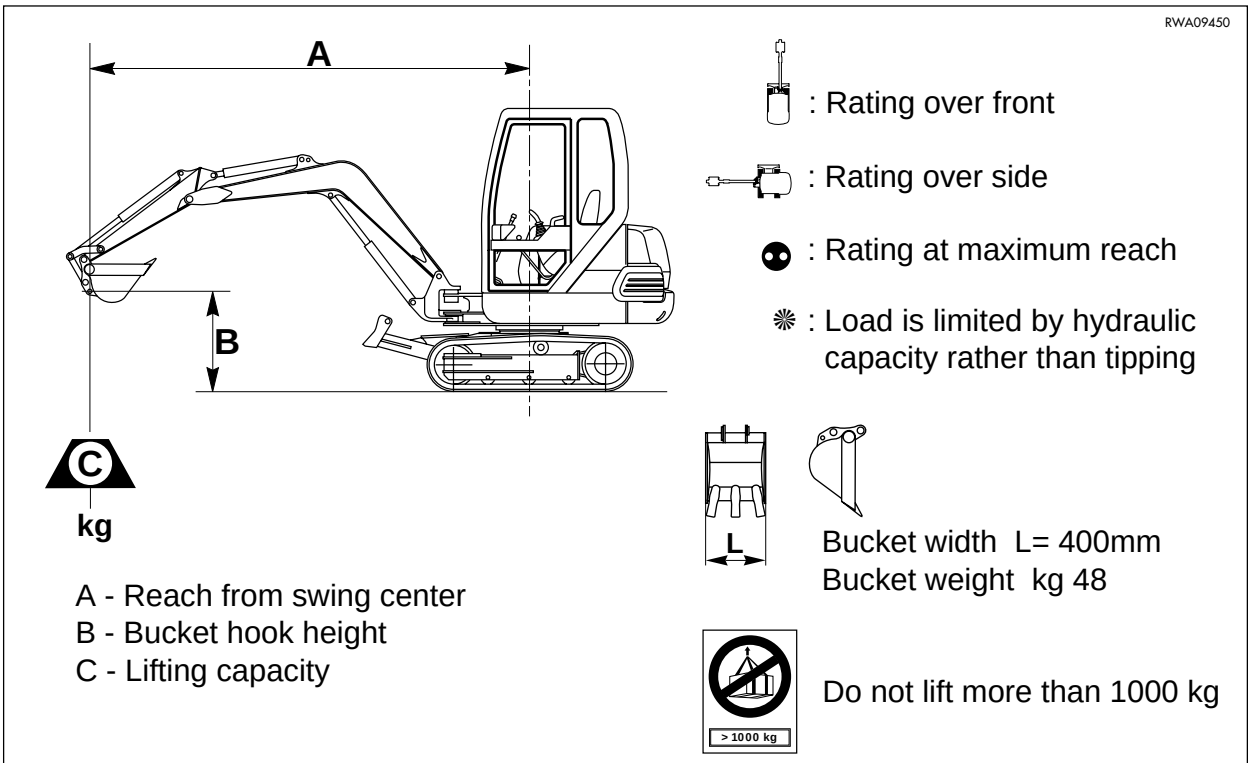

A - Reach from swing center
B - Bucket hook height
C - Lifting capacity

Arm lenght	A / B				3 m		2 m	
1070mm	2m	C	370	310	❋ 525	500	❋ 860	❋ 850
	1m		340	300	530	460	875	860
	0		340	320	500	460	880	850
	-1m		350	330	510	475	900	875
1320mm	0	C	330	270	460	410	825	800

Downloaded from www.Manualslib.com manuals search engine

https://truckmanualshub.com/

5.1.6 LIFTING CAPACITY WITH CANOPY (for model PC20R only)

CAUTION

- **According to the standard EN474-5 (§ 4.1.7.5), this machine if not equipped with suitable devices is not allowed to lift more than 1000 kg.**
- **Do not attempt to lift loads unless the machine is standing on firm, level ground.**

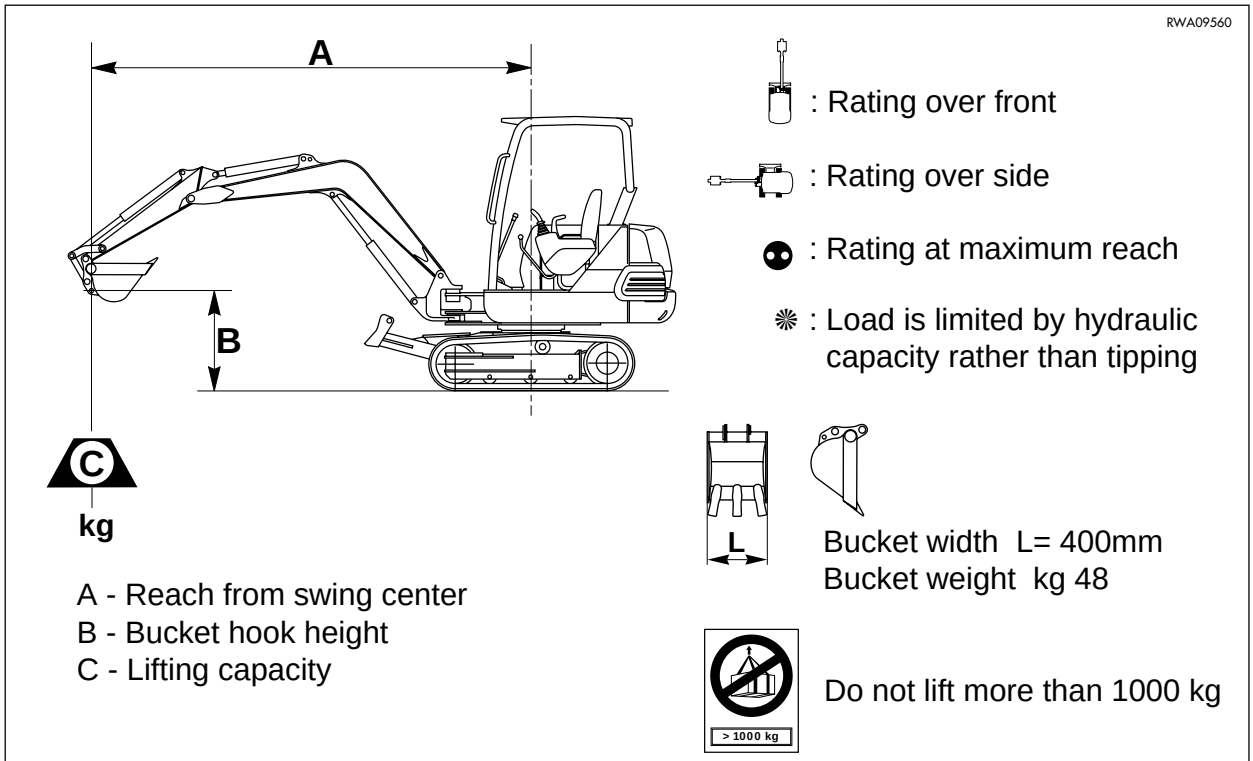

Arm lenght	A / B				3 m		2 m	
1070mm								
	2m	C	360	300	❋ 525	485	❋ 860	❋ 850
	1m	C	330	290	510	440	850	840
	0	C	330	305	480	440	860	830
	-1m	C	335	320	490	450	880	850
1320mm	0	C	320	260	440	395	800	780

Downloaded from www.Manualslib.com manuals search engine

https://truckmanualshub.com/

5.1.7 LIFTING CAPACITY WITH CAB (for model PC27R only)

CAUTION

- **According to the standard EN474-5 (§ 4.1.7.5), this machine if not equipped with suitable devices is not allowed to lift more than 1000 kg.**
- **Do not attempt to lift loads unless the machine is standing on firm, level ground.**

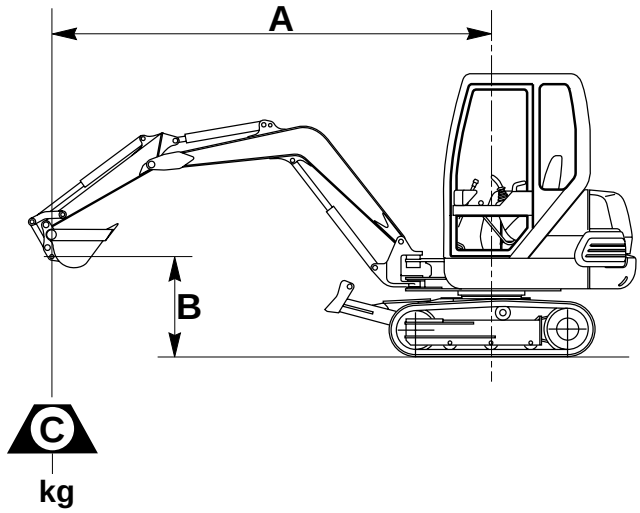

: Rating over front

: Rating over side

: Rating at maximum reach

❋ : Load is limited by hydraulic capacity rather than tipping

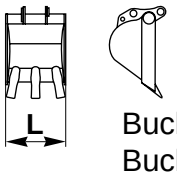

Bucket width L= 400mm
Bucket weight kg 52

A - Reach from swing center
B - Bucket hook height
C - Lifting capacity

▲ : Load is limited according to the standard EN474-5 (§4.1.7.5)

Arm lenght	A / B		●		4 m		3 m		2 m	
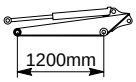 1200mm										
	2m	C	370	❋ 375	340	330	580	❋ 550	❋ 860	❋ 550
	1m	C	340	320	❋ 380	320	680	550	▲ 990	❋ 650
	0	C	❋ 370	300	❋ 370	310	❋ 665	540	▲ 990	840
	-1m	C	390	310	❋ 380	320	700	560	❋ 865	860
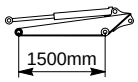 1500mm	0	C	310	260	❋ 330	300	❋ 610	525	▲ 990	800

Downloaded from www.Manualslib.com manuals search engine

https://truckmanualshub.com/

5.1.8 LIFTING CAPACITY WITH CANOPY (for model PC27R only)

CAUTION

- **According to the standard EN474-5 (§ 4.1.7.5), this machine if not equipped with suitable devices is not allowed to lift more than 1000 kg.**
- **Do not attempt to lift loads unless the machine is standing on firm, level ground.**

RWA09780

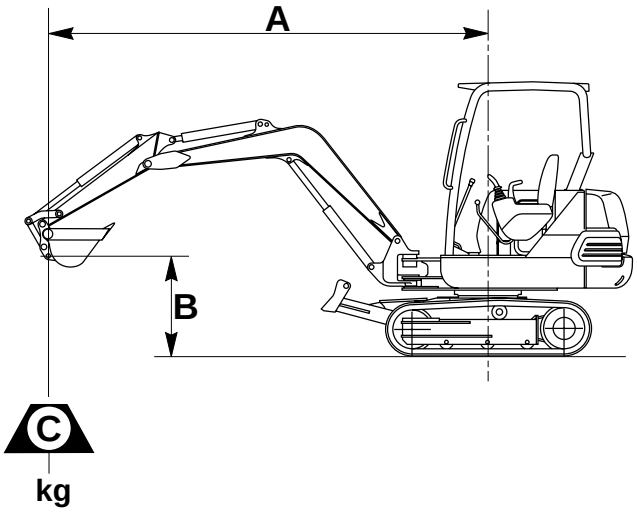

: Rating over front

: Rating over side

: Rating at maximum reach

❋ : Load is limited by hydraulic capacity rather than tipping

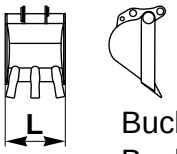

Bucket width L= 400mm
Bucket weight kg 52

A - Reach from swing center
B - Bucket hook height
C - Lifting capacity

▲ : Load is limited according to the standard EN474-5 (§4.1.7.5)

Arm lenght	A / B		●		4 m		3 m		2 m	
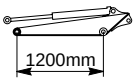 1200mm										
	2m	C	380	❋ 375	330	320	550	❋ 550	❋ 860	❋ 550
	1m	C	320	300	❋ 380	310	655	530	▲ 990	❋ 650
	0	C	❋ 370	285	❋ 370	300	❋ 665	520	▲ 990	800
	-1m	C	380	295	❋ 380	310	675	530	❋ 865	850
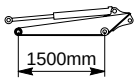 1500mm	0	C	300	250	❋ 330	285	❋ 610	500	▲ 990	780

Downloaded from www.Manualslib.com manuals search engine

https://truckmanualshub.com/

Downloaded from www.Manualslib.com manuals search engine

https://truckmanualshub.com/

AUTHORISED OPTIONAL EQUIPMENT

Downloaded from www.Manualslib.com manuals search engine

https://truckmanualshub.com/

6.1 AUTHORIZED OPTIONAL EQUIPMENT

CAUTION

- **Komastu Utility machines can be supplied with optional equipment in addition to the standard equipment; if optional equipment is installed and used, carefully read the relevant operation manual and keep to the instructions given therein.**
- **Use exclusively optional or special equipment recommended and approved by Komastu Utility and complying with the requisites indicated in the table (See "6.1.3 CHARACTERISTICS OF THE OPTIONAL EQUIPMENT").**
- **Komastu Utility cannot be held liable for any damage, accident, reduction of the machine efficiency due to the application and use of unauthorized equipment.**

6.1.1 PRECAUTIONS REGARDING SAFETY

The installation of optional accessories and equipment other than those authorized by Komastu Utility negatively affects the life of the machine, but can also cause problems concerning safety.
It is advisable to contact a Komastu Utility Dealer before installing any accessory not indicated in this operation and maintenance manual.
In case of failure to comply with this rule, Komastu Utility declines any responsibility for accidents or damage.

DANGER

- **When removing or installing any equipment, take the following precautions and be careful to the safety conditions.**
- **Carry out installation and removal on a firm and flat surface.**
- **When the operations are carried out by two or more operators, decide the communication signals in advance and respect them during the operations.**
- **Use a crane to handle objects weighing more than 25 kg.**
- **Always support any heavy part before moving it. When heavy parts are lifted, be always careful to the center of gravity of the object being handled.**
- **It is very dangerous to carry out any operation with a suspended load, therefore, always position the load on a support and make sure that it is in a safe position.**
- **When installing or removing any equipment, make sure that it is stable and cannot fall down.**
- **Do not stand under loads being lifted by a crane.**
  Take care to choose a safe position, where you do not run any risk in case the load should fall down.

IMPORTANT

- **Specialized personnel is required to operate cranes. Do not allow non-specialized personnel to use cranes.**

For further details regarding installation and removal operations, contact your Komastu Utility Dealer.

Downloaded from www.Manualslib.com manuals search engine

https://truckmanualshub.com/

6.1.2 PRECAUTIONS REGARDING THE INSTALLATION OF EQUIPMENT

DANGER

- **The use of lengthened work equipment reduces the stability of the machine.**
  If it is necessary to rotate the upper structure on a slope or to travel downhill, be particularly careful, since the machine may lose its balance and overturn.
  The following operations are particularly dangerous, therefore it is highly recommended not to perform them.

1 - Travelling downhill with raised work equipment.

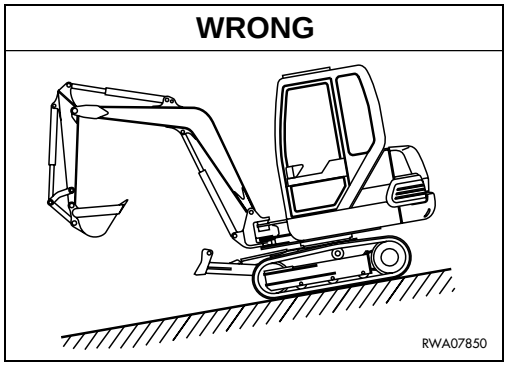

2 - Transversal crossing of slopes.

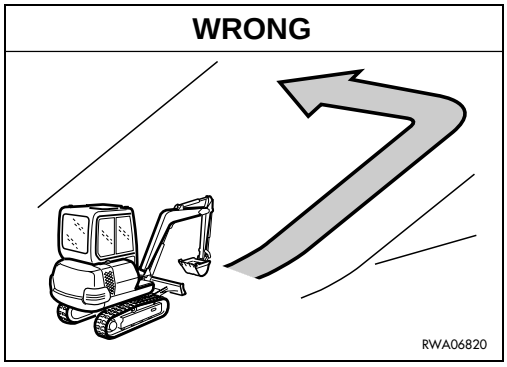

3 - Rotation of the upper structure on slopes.

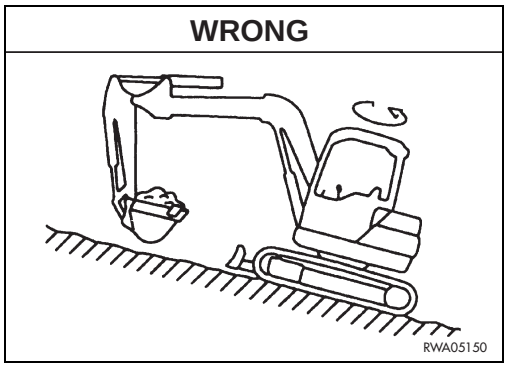

- **When installing work equipment with dimensions exceeding those of the standard equipment, be careful to the space necessary for the movements of the equipment and for the rotation of the upper structure.**
- **Always keep to the correct procedure when installing the boom and arm. Failure to carry out the correct procedure may result in grave risks, therefore it is advisable to contact a Komastu Utility Dealer before the installation.**

Downloaded from www.Manualslib.com manuals search engine

https://truckmanualshub.com/

6.1.3 CHARACTERISTICS OF THE OPTIONAL EQUIPMENT

(FOR MODEL PC20R ONLY)

(Specific weight of the handled material = 1.8 t/cu.m.)

EQUIPMENT	MAX. WEIGHT (kg)	MAX. DIMENSIONS		MAX. SAE CAPACITY (m^3)	MAX. OPERATING PRESSURE (bar)	MAX. FLOW RATE (l/min.)
		Width (mm)	Height (mm)			
Bucket	60	550	—	0.085	—	—
Ditch-cleaning bucket	40	1300	—	0.050	—	—
Ditch-digging bucket	55	950	—	0.075	—	—
Clamshell bucket	70	275	1000	0.025	210	24
Hydraulic hammer	150	—	950	—	140	35
Drill	90	250 ✻	1500 ●	—	210	35

✻ Measure referred to the tool diameter

● Measure referred to the tool length

(FOR MODEL PC27R ONLY)

(Specific weight of the handled material = 1.8 t/cu.m.)

EQUIPMENT	MAX. WEIGHT (kg)	MAX. DIMENSIONS		MAX. SAE CAPACITY (m^3)	MAX. OPERATING PRESSURE (bar)	MAX. FLOW RATE (l/min.)
		Width (mm)	Height (mm)			
Bucket	70	550	—	0.085	—	—
Ditch-cleaning bucket	40	1300	—	0.050	—	—
Ditch-digging bucket	55	950	—	0.075	—	—
Clamshell bucket	100	410	1000	0.040	210	24
Hydraulic hammer	150	—	950	—	140	30
Drill	125	300 ✻	2000 ●	—	210	30

✻ Measure referred to the tool diameter

● Measure referred to the tool length

Downloaded from www.Manualslib.com manuals search engine

https://truckmanualshub.com/

6.2 ARRANGEMENT FOR THE INSTALLATION OF THE DEMOLITION HAMMER (BREAKER)

DANGER

- **For the characteristics of the hammer, see “6.1.3 CHARACTERISTICS OF THE OPTIONAL EQUIPMENT”.**
- **The demolition hammer is very noisy, therefore always wear headphones when using it.**

6.2.1 DESCRIPTION AND CONTROL

The machine is fitted for the application of a demolition hammer; the operation of the hammer is obtained by means of an additional distributor controlled by a pedal (1) positioned on the left side.
The hammer is operated by pressing the pedal (1) with the toe, since pressurized oil is thus introduced in the delivery circuit (left side); the oil flow is interrupted and the hammer is thus stopped by releasing the pedal.
To use the demolition hammer, make sure that the control of the selection valve (2) is completely rotated anticlockwise (Pos. A).

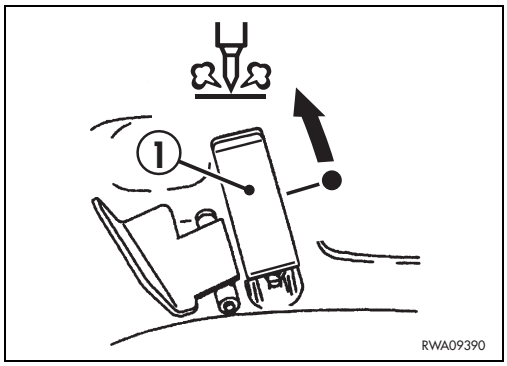

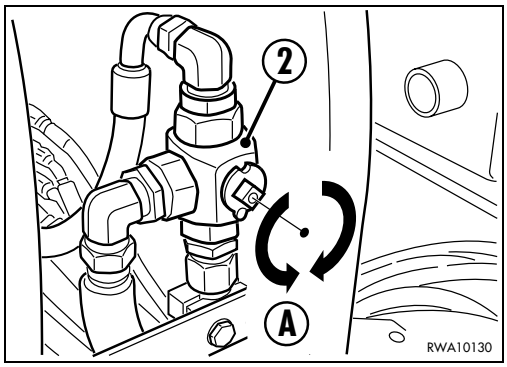

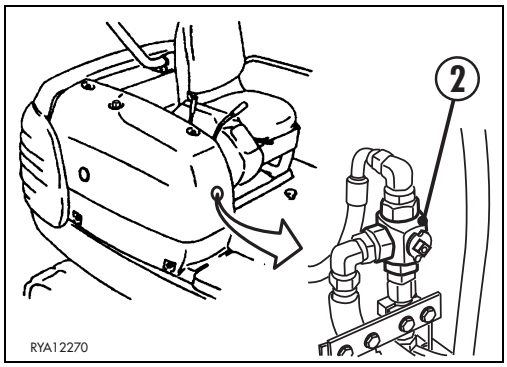

6.2.2 USE OF THE DEMOLITION HAMMER AND RULES TO BE OBSERVED

The choice of the suitable tool is a very important factor to obtain the maximum productivity from the demolition hammer.
The geometry of the tool must be defined according to the nature of the material to be broken and to the type of work to be carried out.
The hammer is used to break floors, cement structures, walls, small rocky surfaces, excavations with open section, asphalt, etc. With the application of special tools it can also be used as asphalt-cutter or compactor.

FOR A CORRECT USE, IT IS NECESSARY TO:

1 - Make sure that the position of the hammer with respect to the material to be broken is as perpendicular as possible and that the arm thrust is sufficient, so that all the power of the hammer can be exploited.

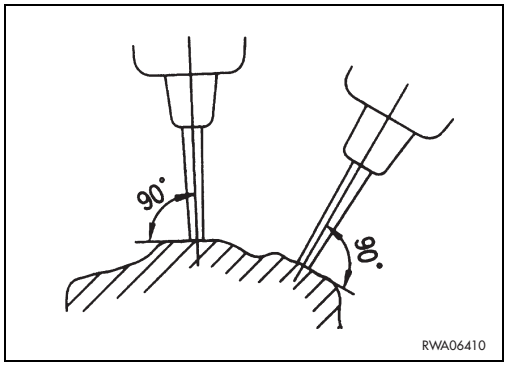

Downloaded from www.Manualslib.com manuals search engine

https://truckmanualshub.com/

2 - Keep the pressure of the excavator on the hammer constant as the bit penetrates in the material.
Always follow the hammer in the penetration phase and operate the excavator arms in order to obtain a pressure sufficient to keep the undercarriage raised at about 5 mm from the ground.
Do not raise the undercarriage more than necessary.

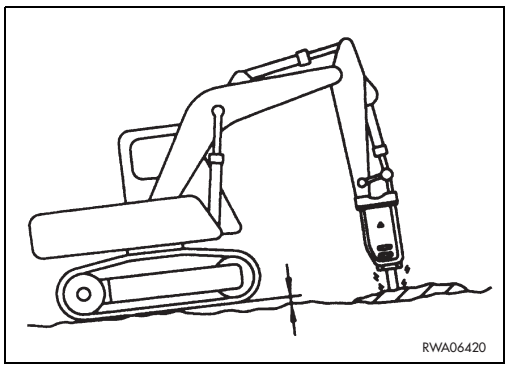

3 - When working on very hard materials, it is important not to keep hitting the same point for more than 30 seconds.
Hit the same point for a few seconds and change position very frequently, in order to facilitate the breaking of the material.

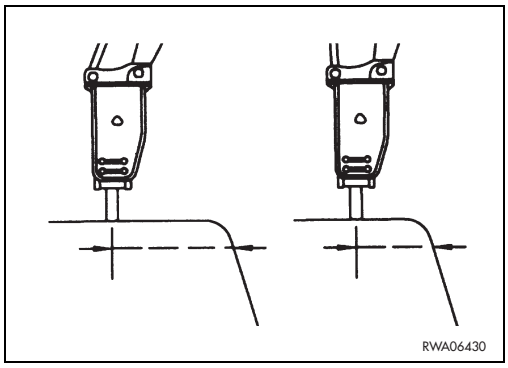

4 - To facilitate the sliding of the tool on its seat, check the thrust direction and always correct the hitting position of the hammer by means of the bucket and arm control.

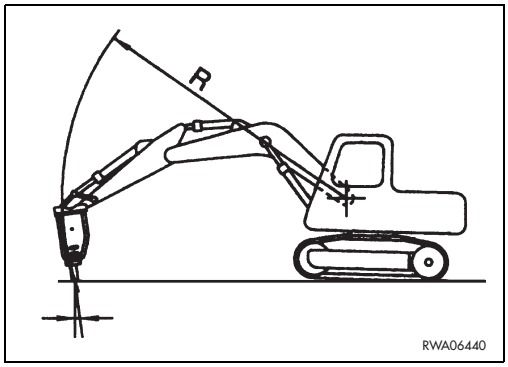

5 - Always check that the arm thrust is optimal, in order to avoid harmful and useless strokes.

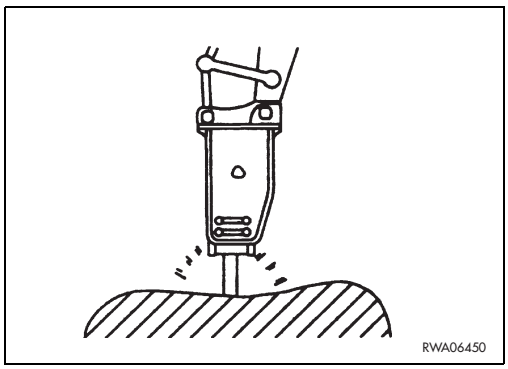

Downloaded from www.Manualslib.com manuals search engine

https://truckmanualshub.com/

IMPORTANT

- **During work, do not use the demolition hammer with the bucket cylinder at the end of its stroke, but always leave a minimum space of 5 cm.**

ALWAYS AVOID THE FOLLOWING INCORRECT USES:

1 - Gathering or moving stones with the demolition hammer.

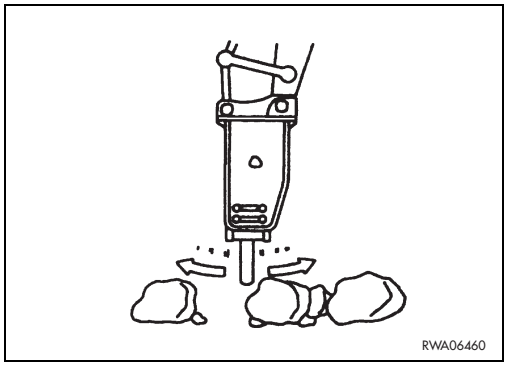

2 - Rotating the upper structure while using the hammer.

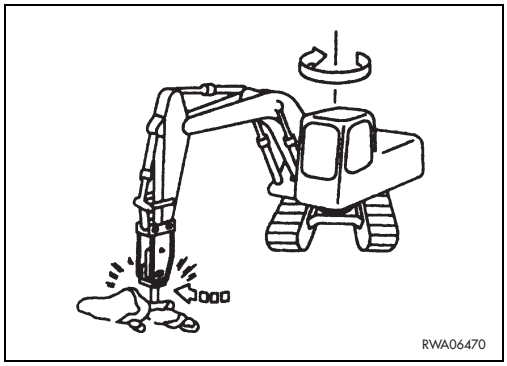

3 - Moving the tool while it is hitting the material to be broken.

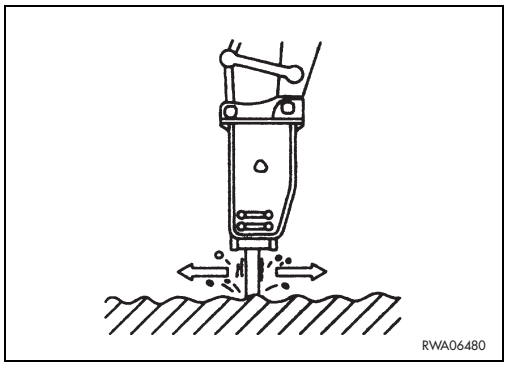

Downloaded from www.Manualslib.com manuals search engine

https://truckmanualshub.com/

4 - Working with the hammer in horizontal position or even with greater inclination.

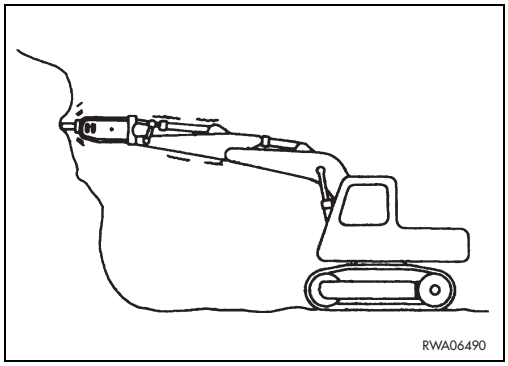

5 - Lever with the tool after thrusting it into the material to be broken.

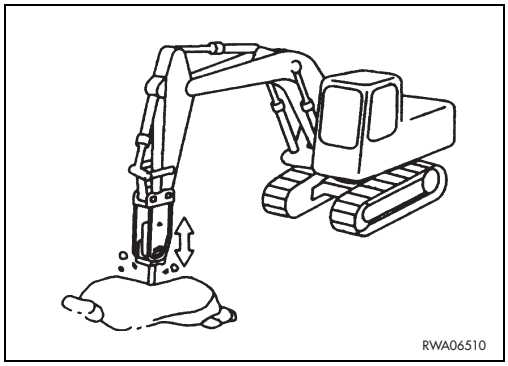

6 - Hitting the ground with the hammer bit.

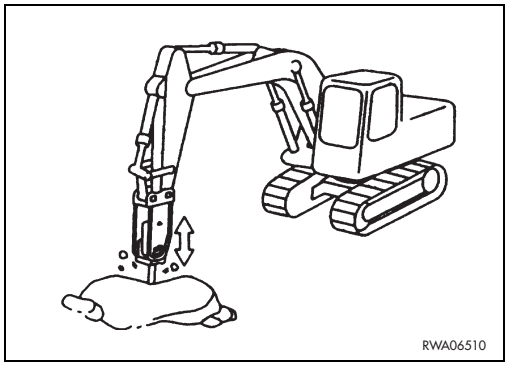

7 - Lifting the machine by levering on the hammer bit with the bucket cylinder extended to the end of its stroke.

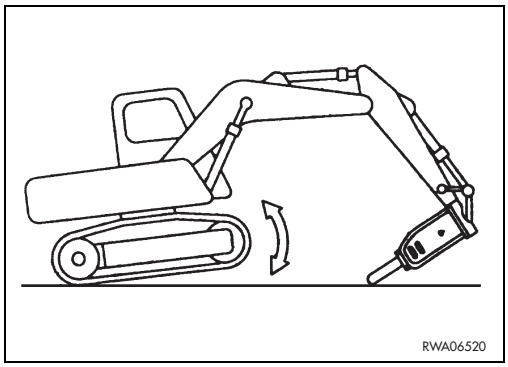

Downloaded from www.Manualslib.com manuals search engine

https://truckmanualshub.com/

6.2.3 INSTALLING AND REMOVING THE DEMOLITION HAMMER

6.2.3.1 INSTALLING THE HAMMER

DANGER

- **The machine must be parked on a level surface, with the equipment resting on the ground.**
- **For the installation, the hammer must be positioned horizontally, with the bit directed towards the machine.**
- **When the coupling pins are removed or installed, chips may come off; always wear gloves, safety goggles and helmet.**
- **The change of the equipment must be carried out by two operators, who must decide together the words and signals to be used during operations.**
- **Do not use your fingers to center the holes, since they may be injured or even cut.**
- **Release the residual pressure that may be present in the pipes completely.**

For the installation of the demolition hammer it is necessary to connect the mechanical constraints of the bucket as described in “3.13.4 CHANGING THE BUCKET” and to carry out the hydraulic connections using the pipes provided. After connecting the mechanical constraints, carry out the hydraulic connections by proceeding as follows:

1 - Stop the engine and move the hydraulic controls in all directions, in order to completely release the residual pressures present in the circuits of the machine.

2 - Press the hammer control pedal to release the residual pressure present in the hammer delivery pipe.

3 - Slowly loosen the hydraulic oil filling cap, in such a way as to release the residual pressure from the tank.

4 - Remove the sealing plugs of the rapid couplings of both the machine and the hammer.

5 - Connect the right (1) and left (2) pipes. The rapid couplings must be in compliance with the ISO 7241-1 series “B” standard.

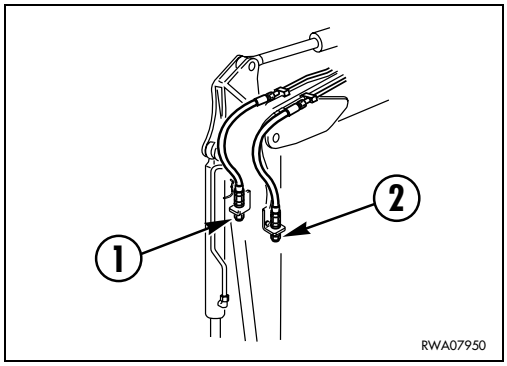

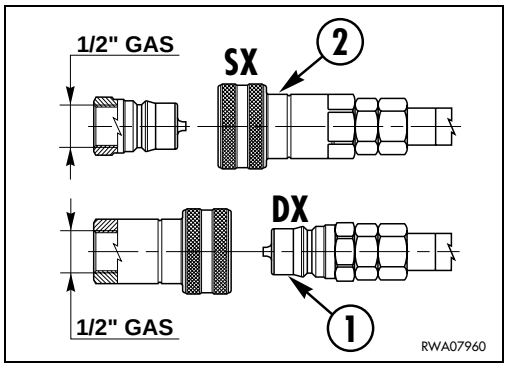

CAUTION

- **When connecting the pipes, take care to prevent any impurities from getting into them.**

6 - Rotate the control of the selection valve (3) completely anticlockwise (Pos. A).

7 - Start the machine and raise the demolition hammer positioning it vertically.

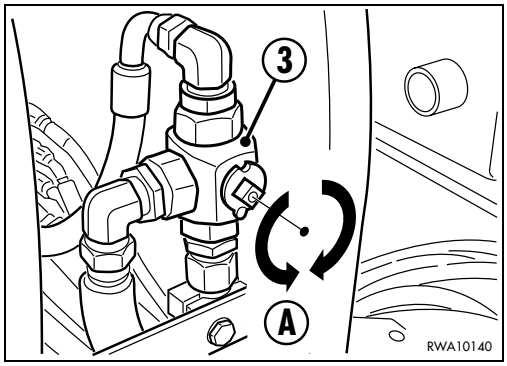

Downloaded from www.Manualslib.com manuals search engine

https://truckmanualshub.com/

8 - Stop the machine again and lubricate the joints (See “4.5 LUBRICATION”) and the hammer (See the specific use and maintenance manual).

9 - Before starting work, check the seals.

DANGER

- **Always wear thick gloves and safety goggles during this check.**
- **To check the system for leaks, use a piece of cardboard or a wooden board.**

6.2.3.2 REMOVING THE HAMMER

To remove the hammer, proceed as follows:

1 - Stop the engine and move the hydraulic controls in all directions, in order to completely release the residual pressures present in the circuits of the machine.

2 - Press the hammer control pedal to release the residual pressure present in the hammer delivery pipe.

3 - Slowly loosen the hydraulic oil filling cap to release the residual pressure from the tank.

4 - Disconnect the hammer feeding and draining pipes.

5 - Fit the sealing plugs of the rapid couplings.

6 - Disconnect the hammer from the mechanical constraints, as described in “3.13.4 CHANGING THE BUCKET”.

6.2.4 MAINTENANCE

The hydraulic system does not require any maintenance operation and inspection other than those prescribed for the machine.
For the maintenance operations required for the hammer, see the specific operation manual.

Downloaded from www.Manualslib.com manuals search engine

https://truckmanualshub.com/

6.3 ARRANGEMENT FOR THE OPERATION OF OPTIONAL EQUIPMENT

The machine is equipped with an independent hydraulic circuit for the operation of optional equipment that can be installed instead of the standard bucket.
The oil flow in the circuit is controlled by a selection valve (1) and a pedal (2) that controls the additional distributor provided for the operation of the equipment.
Delivery and draining pipes for the oil necessary for the operation of the equipment are also provided as a fixed installation and reach the coupling.

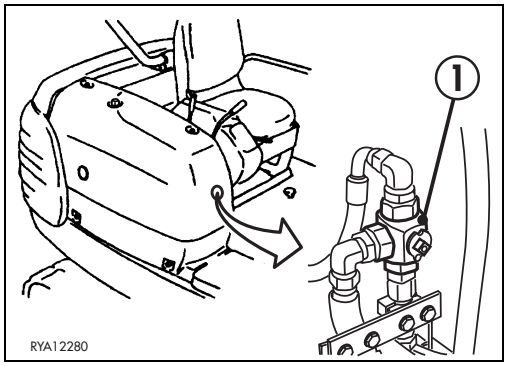

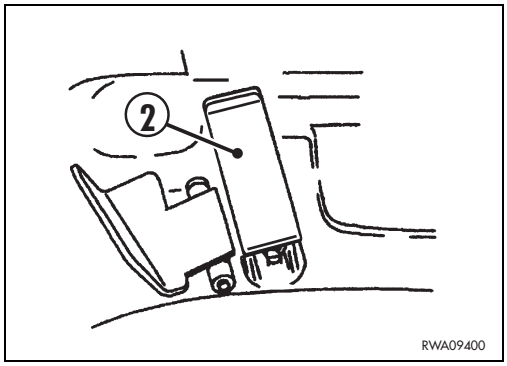

6.3.1 SELECTION VALVE (1)

This is a three-way valve and is used to change the direction of the hydraulic oil flow.

Pos. A(Valve control completely rotated anticlockwise)
The oil returning from the equipment is directly deviated to the tank outlet. This position is specific for the use of the demolition hammer.

Pos. B(Valve control completely rotated clockwise)
The oil flow is deviated to the distributor, thus obtaining the a direct passage between the distributor and the equipment. This position is used for equipment with double delivery (clamshell bucket, drill, etc.).

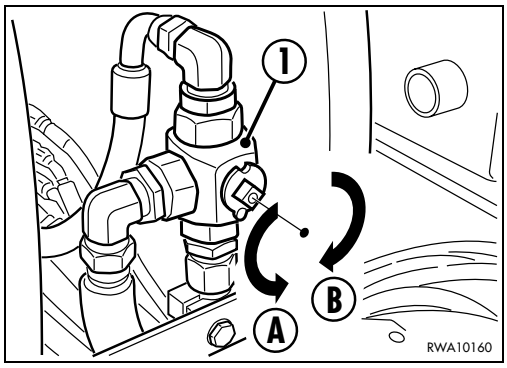

Downloaded from www.Manualslib.com manuals search engine

https://truckmanualshub.com/

6.3.2 CONTROL PEDAL (2)

This pedal controls the delivery and return of the oil to the optional equipment.

1 - If the pedal is pressed in (A), high-pressure oil is conveyed to the equipment through the left piping (3).

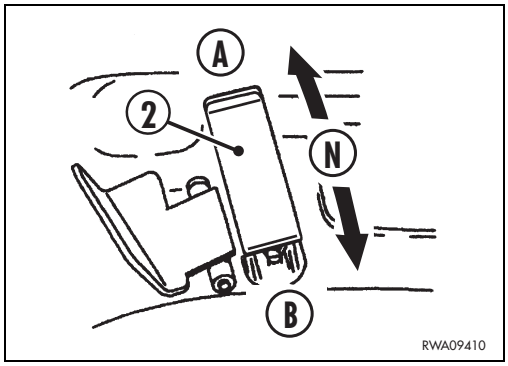

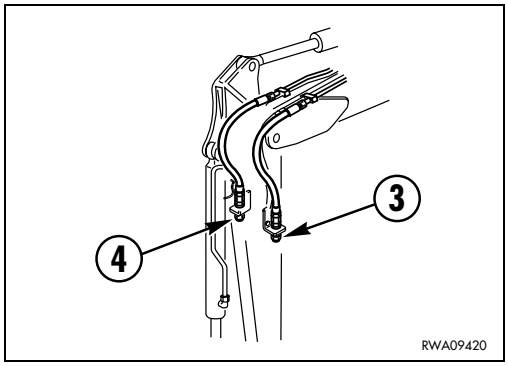

2 - If the pedal is pressed in (B) with the selection valve (1) control in (B), high-pressure oil is conveyed to the equipment through the right piping (4).

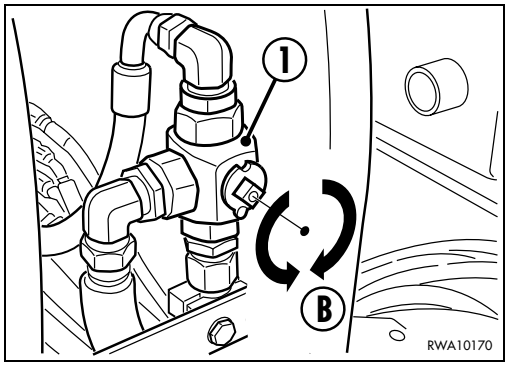

3 - If the circuit is arranged for the use of equipment with unidirectional flow (demolition hammer, etc.) and therefore with the selection valve (1) control in pos. (A), press the pedal (2) in (A) only, since the right piping (4) serves exclusively for the return of the oil to the tank.

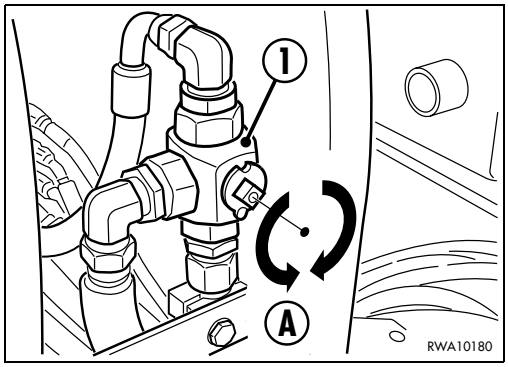

Downloaded from www.Manualslib.com manuals search engine

https://truckmanualshub.com/

6.3.3 ASSEMBLYING AND CONNECTING THE EQUIPMENT

DANGER

- **The machine must be parked on a level surface, with the equipment resting on the ground.**
- **When the coupling pins are removed or installed, chips may come off; always wear gloves, safety goggles and helmet.**
- **The change of the equipment must be carried out by two operators, who must decide together the words and signals to be used during operations.**
- **Do not use your fingers to center the holes, since they may be injured or even cut.**
- **Release the residual pressure that may be present in the pipes completely.**

For the installation of the equipment it is necessary to connect the mechanical constraints of the bucket as described in “3.13.4 CHANGING THE BUCKET” and to carry out the hydraulic connections using the pipes provided.
After connecting the mechanical constraints, carry out the hydraulic connections by proceeding as follows:

1 - Stop the engine and move the hydraulic controls in all directions, in order to completely release the residual pressures present in the circuits of the machine.

2 - Press the optional equipment control pedal to release the residual pressure present in the delivery pipe.

3 - Slowly loosen the hydraulic oil filling cap, in such a way as to release the residual pressure from the tank.

4 - Remove the sealing plugs of the machine rapid couplings and of the equipment rapid couplings.

5 - Connect the right (1) and left (2) pipes. The rapid couplings must be in compliance with the ISO 7241-1 series “B” standard.

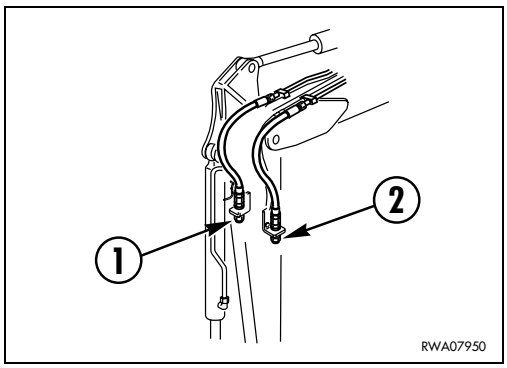

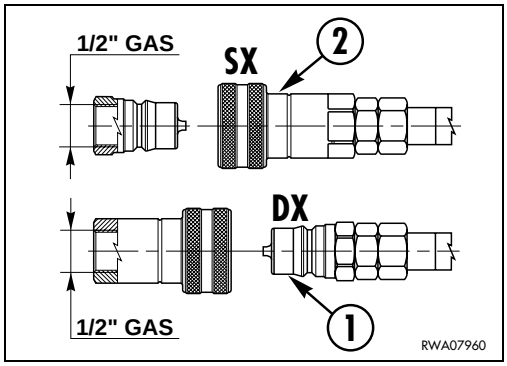

CAUTION

- **When connecting the pipes, take care to prevent any impurities from getting into them.**

6 - Start the machine and perform several manoeuvres with the equipment control pedal, in order to check the seals.

DANGER

- **Always wear thick gloves and safety goggles during this check.**
- **To check the system for leaks, use a piece of cardboard or a wooden board.**

Downloaded from www.Manualslib.com manuals search engine

https://truckmanualshub.com/

6.3.4 MAINTENANCE

The hydraulic system does not require any maintenance operation and inspection other than those prescribed for the machine.
For the maintenance operations required for the equipment, see the specific operation manuals.

Downloaded from www.Manualslib.com manuals search engine