https://truckmanualshub.com/

GM2810

5-Unit Rotary Mower

Owner's Operating Manual

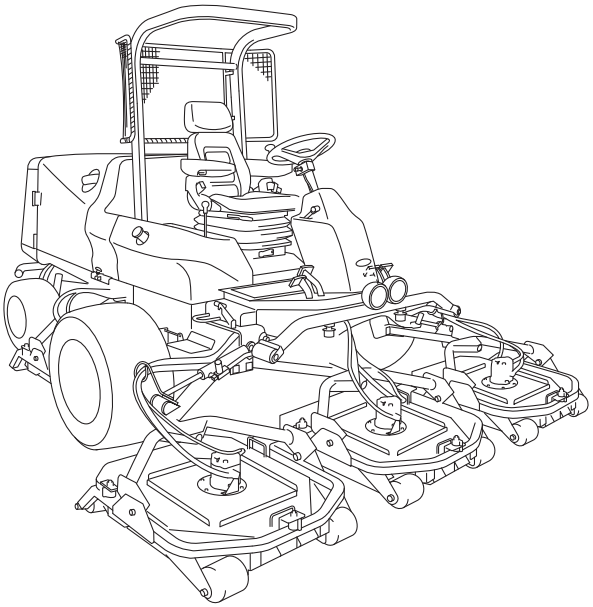

Serial No.　GM2810：10114-

"Required reading"
Read this manual and the Owner's Manual for the engine before using the machine.

BARONESS®
Quality on Demand

Original Instructions Ver.1.3

https://truckmanualshub.com/

Regulations

California Proposition65

(For California, USA)

⚠ WARNING:

Operating, servicing and maintaining a passenger vehicle or off-road vehicle can expose you to chemicals including engine exhaust, carbon monoxide, phthalates, and lead, which are known to the State of California to cause cancer and birth defects or other reproductive harm. To minimize exposure, avoid breathing exhaust, do not idle the engine except as necessary, service your vehicle in a well-ventilated area and wear gloves or wash your hands frequently when servicing your vehicle. For more information go to www.P65Warnings.ca.gov/passenger-vehicle.

318yi8-005

California Proposition65_001

CALIFORNIA SPARK ARRESTER

(For California, USA)

⚠ Warning

Operation of this equipment may create sparks that can start fires around dry vegetation.
A spark arrester may be required.
The operator should contact local fire agencies for laws or regulations relating to fire prevention requirements.

The DPF installed on the engine of this machine meets requirements of California Public Resource Code Section 4443.

https://truckmanualshub.com/

Greeting

Thank you for purchasing the Baroness machine. This manual explains proper handling, adjustment, and inspection of your machine. Prior to use, carefully read this manual to thoroughly understand the contents for safe and correct operation.
We hope you will use the machine safely, and take advantage of its best performance.

Keeping the Owner's Operating Manual

Keep this Manual in the box located in the rear of the seat.

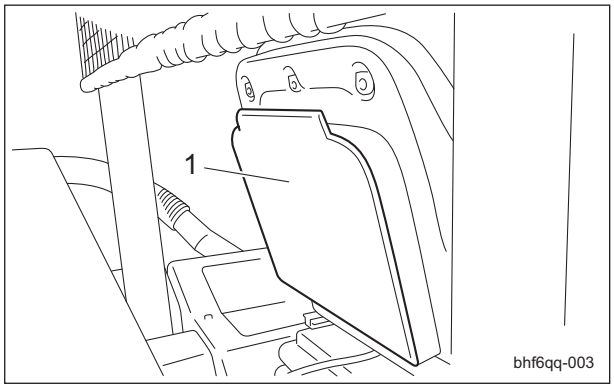

Keeping the Owner's Operating Manual_001

1	Box

https://truckmanualshub.com/

Introduction

Read this manual carefully to ensure that you thoroughly understand how to properly operate and maintain this machine, and to avoid causing injury to yourself or others.

The operator is responsible for operating the machine properly and safely.

Do not perform maintenance on the machine other than that described in this manual.

Be sure to also read the Owner's Manual for the engine, battery, etc.

Maintenance should only be performed by a certified specialist.

If you have any questions concerning maintenance or genuine parts, please contact your local Baroness dealer or Kyoeisha.

When making inquiries about this machine, please specify the machine's model designation and serial number.

When loaning or transferring this machine, please also provide this manual together with the machine.

Kyoeisha Co., Ltd.

Caution

The information described in this manual is subject to change for improvement without prior notice.
When replacing parts, be sure to use genuine Baroness parts or parts designated by Kyoeisha.
Note that the Baroness product warranty may not apply to defects caused by the use of parts from other companies.

Warning Symbols

This manual uses the following warning symbols for handling precautions that are important for your safety.

696cq5-001	Warning symbol

This symbol indicates the articles regarding "Danger," "Warning," or "Caution."
Those articles describe important safety precautions and so read them carefully to understand completely before operating the machine.
Failure to adequately follow these safety precautions may cause an accident.

Danger

This symbol indicates that serious injury or death will occur if the warning is ignored.

Warning

This symbol indicates that serious injury or death may occur if the warning is ignored.

Caution

This symbol indicates that injury or damage to property may occur if the warning is ignored.

Important

This symbol indicates precautions on the mechanism of the machine.

https://truckmanualshub.com/

Purpose

This machine is intended for cutting turf grass at golf courses.
Do not use this machine in any way other than its intended purpose, and do not modify the machine.
Operating this machine for other purposes and modifying it may be very dangerous and may cause damage to the machine.
In addition, this machine is not authorized for operation as a special motor vehicle. Do not operate it on public roads.

https://truckmanualshub.com/

Introduction

https://truckmanualshub.com/

Contents

Safety ..... Page 1-1

Safe Operating Practices ..... Page 1-2

Disposal ..... Page 2-1

Recycle and Waste Disposal ..... Page 2-2

Product Overview ..... Page 3-1

Specifications ..... Page 3-2
Names of Each Section ..... Page 3-4
Safety Signs and Instruction Signs ..... Page 3-7

Handling Instructions ..... Page 4-1

Inspection Before Use ..... Page 4-2
Tightening torques ..... Page 4-15
Adjustment Before Operating ..... Page 4-19
Procedure to Start / Stop Engine ..... Page 4-22
Operation of Each Section ..... Page 4-24
Instruments ..... Page 4-35
Travel of Machine ..... Page 4-64
Cutting Work ..... Page 4-65
Transporting ..... Page 4-66

Maintenance ..... Page 5-1

Maintenance Precautions ..... Page 5-2
Maintenance Schedule ..... Page 5-3
DPF ..... Page 5-8
Jacking up the machine ..... Page 5-14
Greasing ..... Page 5-16
Maintenance (Mower) ..... Page 5-20
Maintenance (Main Body) ..... Page 5-26
Long-Term Storage ..... Page 5-30

https://truckmanualshub.com/

Contents

https://truckmanualshub.com/

Safe Operating Practices ..... Page 1-2

Training .....Page 1-2
Preparation ..... Page 1-2
Operation .....Page 1-3
Maintenance and storage ..... Page 1-4

https://truckmanualshub.com/

Safety

Failure to adequately follow these safety precautions may cause an accident resulting in injury or death.

Danger

This machine is designed to ensure safe operation and has been tested and inspected thoroughly before shipment from the factory.
The machine is equipped with safety devices to prevent accidents.
However, whether the machine demonstrates its original performance level depends on the manner in which it is operated and handled, as well as the manner in which it is managed on a daily basis.
Inappropriate use or management of the machine may result in injury or death.
Observe the following safety instructions to ensure safe operation.

Safe Operating Practices

Training

1. Read this manual and other training material carefully. Be familiar with the controls, safety signs, and the proper use of the equipment.
2. If the operator or mechanic can not read English it is the owner's responsibility to explain this manual to them.
3. All operators and mechanics should seek and obtain professional and practical instruction.
   The owner is responsible for training the users.
   Such instruction should emphasize.
   [1] The need for care and concentration when working with ride-on machines.
   [2] Control of a ride-on machine sliding on a slope will not be regained by the application of the brake.
   The main reasons for loss of control are
   - Insufficient wheel grip
   - Being driven too fast
   - Inadequate braking
   - The type of machine is unsuitable for its task
   - Lack of awareness of the effect of ground conditions, especially slopes
   - Incorrect hitching and load distribution
4. Never allow children or people unfamiliar with these instructions to use or service the machine.
   Local regulations may restrict the age of the operator.
5. The owner/user can prevent and is responsible for accidents or injuries occurring to themselves, other people, or property.
6. Keep in mind that the owner, operator, and mechanic are responsible for accidents or hazards occurring to other people or their property.
7. The ROPS is an integral and effective safety device.
   Do not remove or alter the ROPS.
8. Replace a damaged ROPS.
   Do not repair or alter.
9. You can find additional safety information where needed throughout this manual.
10. Determine the left and right sides of the machine from the normal operating position.

Preparation

1. Evaluate the terrain to determine what accessories and attachments are needed to properly and safety perform the job.
   Only use accessories and attachments approved by the manufacturer.
2. While operating, always wear substantial footwear, long trousers, hard hat, safety glasses, and ear protection.
   Long hair, loose clothing, or jewelry may get tangled in moving parts.
   Do not operate the equipment when barefoot or wearing open sandals.
3. Inspect the area where the equipment is to be used and remove all objects such as rocks, toys and wire which can be thrown by the machine.
4. Keep children out of the operating area and under the watchful care of a responsible adult other than the operator.
5. Exercise care in the handling of fuel.

Warning

Warning-Fuel is highly flammable.
Take the following precautions.

[1] Store fuel in containers specifically designed for this purpose.

https://truckmanualshub.com/

[2] Add fuel before starting the engine.
Never remove the cap of the fuel tank or add fuel while the engine is running or when the engine is hot.

[3] Refuel outdoors only and do not smoke while refueling.

[4] If fuel is spilled, do not attempt to start the engine but move the machine away from the area of spillage and avoid creating any source of ignition until petrol vapours have dissipated.

[5] Replace all fuel tanks and container caps securely.

6. Check that operator's presence controls, safety switches and shields are attached and functioning properly.
Do not operate unless they are functioning properly.
7. If the brake operation is faulty or the parking brake lever has noticeable play, be sure to adjust or repair them before operating the machine.
8. Replace faulty mufflers.
9. Before using, always visually inspect to see that the blades, blade bolts, and cutting assembly are not worn or damaged.
Replace worn or damaged blades and bolts in sets to preserve balance.
10. On multi-blanded machines, take care as rotating one blade can cause other blades to rotate.

Operation

1. Do not operate the engine in a confined space where dangerous carbon monoxide fumes can collect.
2. Only operate in good light, keeping away from holes and hidden hazards.
3. Before attempting to start the engine, disengage all attachments, shift into neutral, and engage the parking brake.
Only start engine from the operator's position.
Use seat belts if provided.
4. Remember there is no such thing as a safe slope.
Travel on grass slopes requires particular care.
To guard against overturning:

[1] Do not stop or start suddenly when going up or downhill.

[2] Engage clutch slowly, always keep machine in gear, especially when traveling downhill.

[3] Machine speeds should be kept low on slopes and during tight turns.

[4] Stay alert for humps and hollows and other hidden hazards.

[5] Never operate across the face of the slope, unless the machine is designed for this purpose.

[6] Never drive the machine on a slope with an angle of gradient that is greater than that specified or in a place where there is a danger of the machine slipping.

5. Use extra care while operating machine with a grass catcher or other attachments. They can affect the stability of the machine.
6. Never raise deck with the blades running.
7. Never operate the machine with damaged guards, shields, or without safety protective devices in place.
Be sure all interlocks are attached, adjusted and functioning properly.
8. Do not change the engine governor settings or overspeed the engine.
Operating the engine at excessive speed may increase the hazard of personal injury.
9. Do the following before leaving the operator's position.

[1] Stop on level ground.

[2] Disengage the power take-off and lower the attachments.

[3] Change into neutral and set the parking brake.

[4] Stop the engine and remove the key.

10. Disengage the drive to attachments, stop the engine, and remove the ignition key in the following conditions.

[1] Before refueling.

[2] Before making height adjustment unless adjustment can be made from the operator's position:

[3] Before cleaning blockages.

[4] Before checking, cleaning or working the machine.

[5] After striking a foreign object or if an abnormal vibration occurs.
Inspect the machine for damage and make repairs before restarting and operating the equipment.

https://truckmanualshub.com/

11. Keep hands and feet away from the cutting units and the rotating parts.
12. Do not mow in reverse unless absolutely necessary.
    Always look down and behind before and while backing.
13. Do not carry passengers.
14. Never operate while people, especially children, or pets are nearby.
15. Slow down and use caution when making turns and crossing roads and sidewalks.
16. Stop the blades rotating before crossing surfaces other than grass.
17. Disengage drive to attachments when transporting or not in use.
18. When using any attachments, never direct discharge of material toward bystanders nor allow anyone near the machine while in operation.
19. Do not operate the machine under the influence of alcohol or drugs.
20. Take care when loading or unloading the machine into a trailer or a truck.
    Load or unload the machine in a flat and safe place.
    Before loading or unloading, set the parking brake on the truck or trailer, stop the engine, and chock the wheels.
    When transporting the machine on a truck or a trailer, set the parking brake, stop the engine, and fasten the machine to the truck with a rope or other suitable restraining device that has sufficient strength.
    When using a running board, select one with sufficient strength, length, and width and that will not cause the machine to slip.
21. Close the fuel valve before transporting the machine.
22. Use care when approaching blind corners, shrubs, trees, or other objects that may obscure vision.
23. Do not take your eyes off the road ahead.
    Do not operate the machine with no hands.
24. Reduce the throttle setting during engine run-out and, if the engine is provided with a shut-off valve, turn the fuel off at the conclusion of operation.
25. Do not operate the machine when there is the risk of lightning.

Maintenance and storage

1. Disengage drives on level ground, lower the atattachments, set parking brake, stop engine and remove key from ignition.
   Wait for all movement to stop before adjusting, cleaning or repairing.
2. When machine is to be parked, stored, or left unattended, lower the cutting units unless a positive mechanical lock is provided.
3. To reduce the fire hazard, keep the engine, silencer/muffler, battery compartment fuel storage area, cutting units and drives free of grass, leaves, or excessive grease.
   Clean up oil or fuel spillage.
4. Allow the engine to cool before storing in any enclosure.
5. Only cover the machine with a sheet after hot parts have sufficiently cooled down.
6. Never store the equipment with fuel in the tank inside a building where fumes may reach an open flame or spark.
7. If the engine is provided with a shut-off valve, shut off valve while storing or transporting.
8. Do not store fuel near flames.
9. Never allow untrained personnel to service machine.
10. Allow the engine/muffler to cool before checking/maintenance.
11. Appropriately manage and correctly use the tools necessary for servicing or adjusting the machine.
12. Use jack stands to support components when required.
13. Carefully release pressure from components with stored energy.
14. Be sure to depressurize the hydraulic system before performing maintenance operations on it such as removing hydraulic equipment.
15. Check whether line connectors in the hydraulic system are properly tightened.
    Before applying hydraulic pressure, check the connections of the hydraulic pressure lines and the condition of the hoses.
16. When checking the hydraulic circuit for pinhole leaks or oil leakage from nozzles, do not use your hands.
    Use items such as paper or corrugated cardboard to find leakage points.

https://truckmanualshub.com/

Be extremely careful with high-pressure oil as it may pierce your skin, result.
If fluid is injected into the skin it must be surgically removed within a few hours by a doctor familiar with this form of injury or gangrene may result.

17. Disconnect battery before making any repairs.
    Disconnect the negative terminal first and the positive last.
    Reconnect positive first and negative last.
18. Make sure that parts such as wires are not touching each other and that their covers have not come off.
19. Use care when checking the blades.
    [1] Wrap the blades or wear gloves, and use caution when servicing them.
    [2] Only replace blades.
    [3] Never straighten or weld them.
20. On multi-blanded machines, take care as rotating one blade can cause other blades to rotate.
21. Keep hands and feet away from moving parts.
    If possible, do not make adjustments with the engine running.
22. Charge batteries in an open well ventilated area, away from spark and flames.
    Unplug charger before connecting or disconnecting from battery.
    Wear protective clothing and use insulated tools.
23. Keep all parts in good working condition and all hardware tightened.
    Replace all worn or damaged decals.
24. Keep all nuts, bolts and screws tight to be sure the equipment is in safe working condition.
25. If the fuel tank has to be drained, do this outdoors.
26. Swallowing engine coolant can cause injury or death; keep out of reach from children and pets.

https://truckmanualshub.com/

https://truckmanualshub.com/

Disposal

Recycle and Waste Disposal ..... Page 2-2

About Recycle .....Page 2-2
About the Waste disposal .....Page 2-2

https://truckmanualshub.com/

Disposal

Recycle and Waste Disposal

About Recycle

Recycling battery etc. is recommended for environmental conservation and economical use of resources.
It may be required by local laws.

About the Waste disposal

Make sure that waste generated when servicing or repairing the machine is disposed of in accordance with local regulations.
(e.g. waste oil, antifreeze, rubber products, and wires etc.)

https://truckmanualshub.com/

Specifications ..... Page 3-2

Specifications .....Page 3-2
Sound pressure level .....Page 3-3
Sound power level ..... Page 3-3
Vibration level ..... Page 3-3

Names of Each Section ..... Page 3-4

Serial Number Plate .....Page 3-4
Specification Decal ..... Page 3-5
Noise Emission Decal .....Page 3-5
Year of Manufacture Decal ..... Page 3-5
Maintenance Decal .....Page 3-5
ROPS Authentication Decal ..... Page 3-5
Battery capacity decal ..... Page 3-6
Recycle Decal .....Page 3-6
Battery Danger Decal ..... Page 3-6

Safety Signs and Instruction Signs ..... Page 3-7

About Safety Signs and Instruction Signs .....Page 3-7
Positions of Safety Decals and Instruction Decals ..... Page 3-7
Description of Safety Decals and Instruction Decals ..... Page 3-9

https://truckmanualshub.com/

Specifications

Specifications

Model			GM2810	
Dimensions	Total length		145.67 in	370 cm
	Total width	During operation	118.11 in	300 cm
		During transport	90.55 in	230 cm
	Total height	Roof	90.55 in	230 cm
		Steering wheel	64.96 in	165 cm
Weight	Machine（empty fuel tank）	with ROPS, Roof	4,585.54 lb	2,080 kg
Minimum turning radius			125.98 in	320 cm
Engine	Model		Kubota V2403-CR-TE4B	
	Type		Vertical water-cooled 4-cycle diesel engine with turbocharger	
	Total displacement		148.51 cu.in.	2,434 cm^3 (2.434 L)
	Maximum output		43.2 kW (58.7 PS)/2,400 rpm	
Fuel tank capacity			Diesel 13.47 U.S.gals	Diesel 51.0 dm^3 (51.0 L)
Fuel consumption			174 g/PS・h (rated output)	236 g/kW・h (rated output)
Engine oil capacity			2.56 U.S.gals	9.7 dm^3 (9.7 L)
Operating width (Mowing width)			110.24 in	280 cm
Operating height (Mowing height)			0.787 - 3.602 in	20 - 91.5 mm
Blades			5	
Drive		Traveling	HST (2WD/4WD selectable)	
		Mowing	Hydraulic	
Speed (HST)		Forward	0 - 9.94 mph	0 - 16.0 km/h
		Reverse	0 - 3.73 mph	0 - 6.0 km/h
Speed (Mechanical)			-	
Efficiency			4.98 acres/hour (5.59 mph x mowing width x 0.8)	20,160 m^2/h (9.0 km/h x mowing width x 0.8)
Maximum inclination for operation			15 degrees	
Tire size		Front wheel	29 x 14.00 - 15	
		Rear wheel	20 x 12.00 - 10	
Tire pneumatic pressure		Front wheel	21.75 psi	150 kPa (1.5 kgf/cm^2)
		Rear wheel	20.30 psi	140 kPa (1.4 kgf/cm^2)
Battery			105D31R	

* The factory default maximum engine rpm is 2,600 rpm.

https://truckmanualshub.com/

Sound pressure level

Sound pressure level

This machine was confirmed to have a continuous A-weighted sound pressure level of 89dB by measuring identical machines in accordance with the procedure specified in ISO 5395-1:2013.

Sound power level

Sound power level

This machine was confirmed to have a sound power level of 105dB by measuring identical machines in accordance with the procedure specified in directive 2000/14/EC.

Vibration level

Hand-arm vibration

This machine was confirmed not to exceed a vibration level of 2.5 m/s^2 to hands and arms by measuring identical machines in accordance with the procedure specified in ISO 5395-1:2013.

Whole body vibration

This machine was confirmed not to exceed a vibration level of 0.5 m/s^2 to the whole body by measuring identical machines in accordance with the procedure specified in ISO 5395-1:2013.

https://truckmanualshub.com/

Product Overview

Names of Each Section

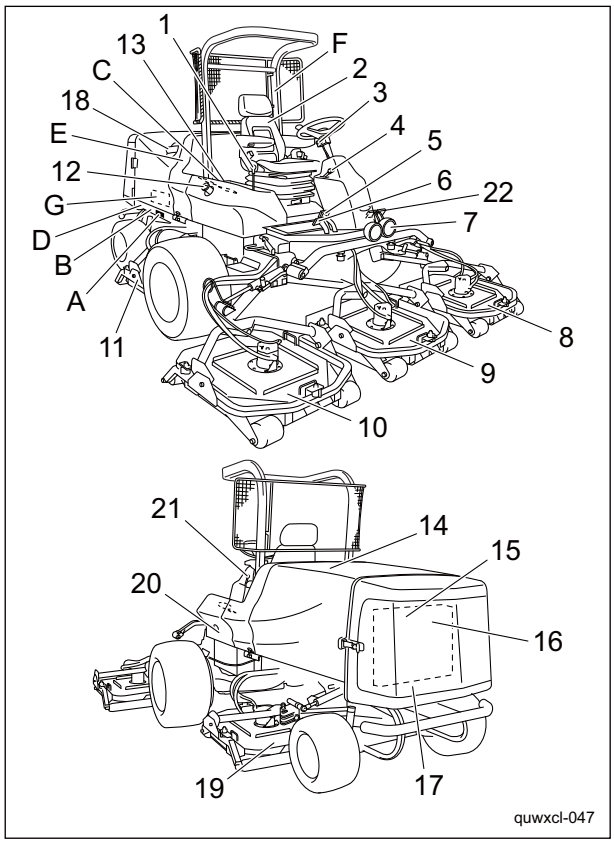

Names of Each Section_001

1	Mower unit up/down lever
2	Seat
3	Diff-lock switch
4	Tilt lever
5	Forward pedal
6	Reverse pedal
7	Lights
8	Mower unit #5
9	Mower unit #1
10	Mower unit #4
11	Mower unit #2
12	Fuel filler
13	Throttle knob
14	Hood
15	Radiator
16	Oil cooler
17	Radiator cover
18	Muffler
19	Mower unit #3
20	Oil gauge
21	Parking brake lever
22	Brake pedals
A	Serial number plate
B	Specification decal
C	Decal, noise emission
D	Year of manufacture decal
E	Maintenance decal
F	ROPS authentication decal
G	Battery capacity decal

Serial Number Plate

The serial number plate indicates the model and serial number of the machine.

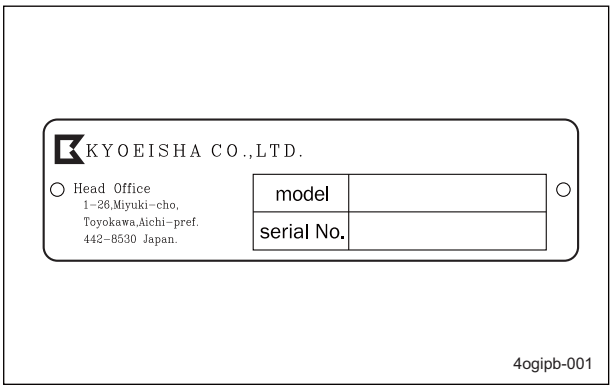

Serial Number Plate_001

https://truckmanualshub.com/

Specification Decal

(For Europe)
The Specification decal indicates the CE marking, model , and weight, etc.

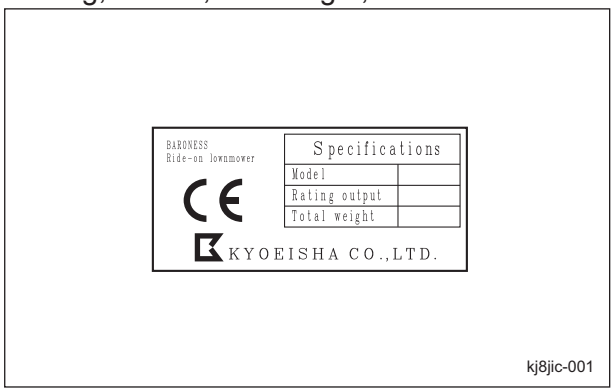

Specification Decal_001

Noise Emission Decal

(For Europe)
The noise emission decal indicates the sound power level determined by measuring identical machines in accordance with the procedure specified in the EC directives.

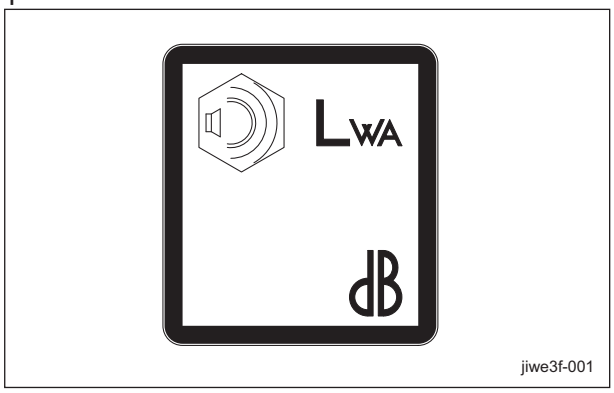

Noise Emission Decal_001

Year of Manufacture Decal

(For Europe)
The year of manufacture decal indicates the year when this machine was manufactured.

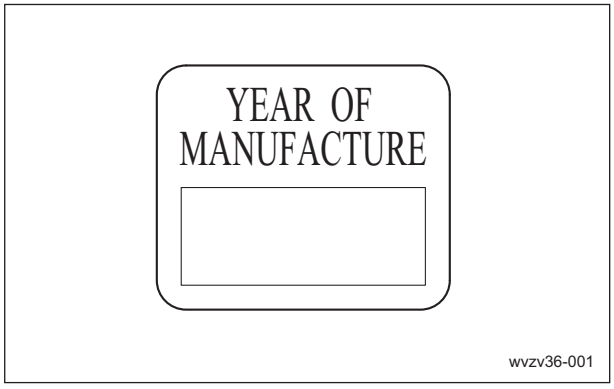

Year of Manufacture Decal_001

Maintenance Decal

The maintenance decal indicates the necessary inspection and maintenance items for this machine.

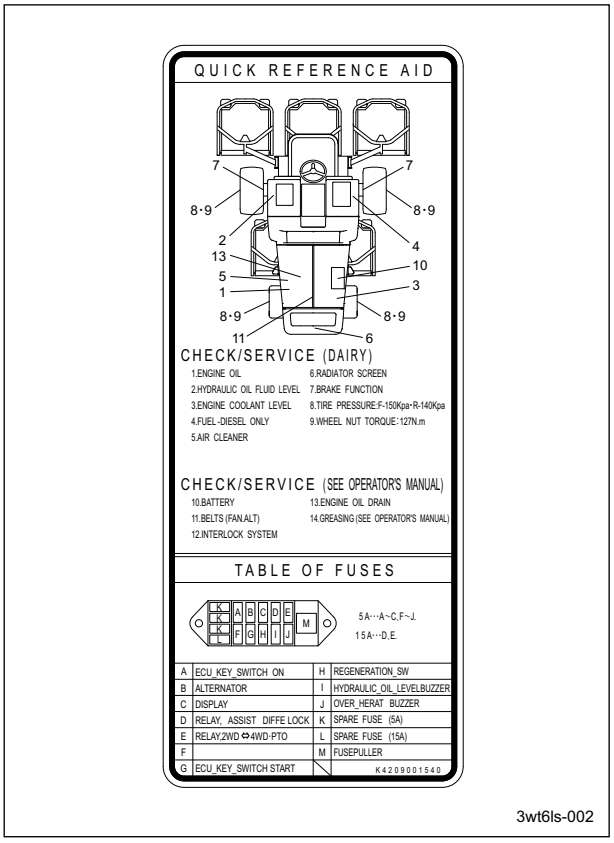

Maintenance Decal_001

ROPS Authentication Decal

The ROPS authentication decal indicates the manufacturer, model, etc., in accordance with International Standard ISO 21299:2009.

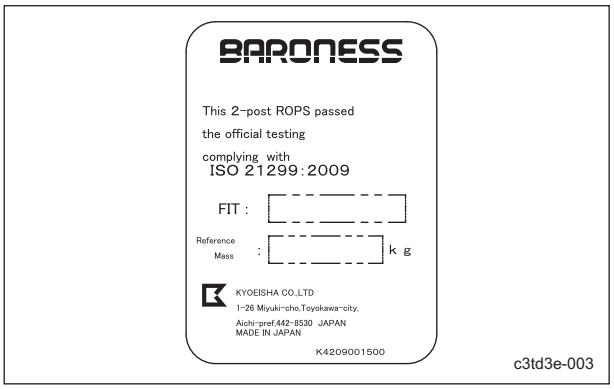

ROPS Authentication Decal_001

https://truckmanualshub.com/

Product Overview

Battery capacity decal

(For Europe)
The battery capacity decal indicates the capacity by 20HR and CCA.

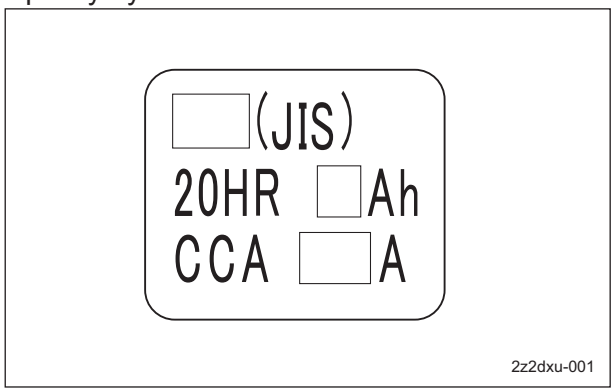

Battery capacity decal_001

Battery Danger Decal

(For USA)
Battery Danger Decal describes handling precautions for battery.

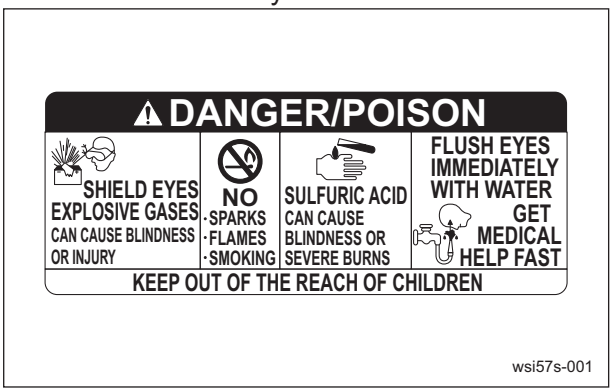

Battery Danger Decal_001

Recycle Decal

Recycle Decal illustrates Recycle Mark in accordance with local regulation.
(For Europe)

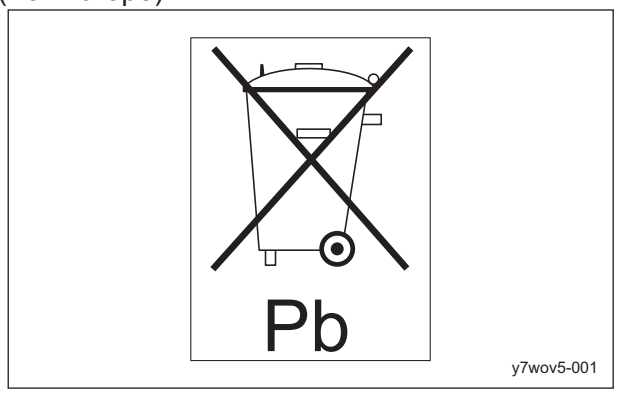

Recycle Decal_001

(For USA)

Recycle Decal_002

https://truckmanualshub.com/

Safety Signs and Instruction Signs

About Safety Signs and Instruction Signs

Warning

Safety decals and instruction decals are attached to this machine.
Make sure that they are preserved in their entirety. If they are damaged, become dirty, or peel off, replace them with new ones.

Part numbers for decals that need to be replaced are listed in the parts catalog. Order them from a Baroness dealer or Kyoeisha.

Positions of Safety Decals and Instruction Decals

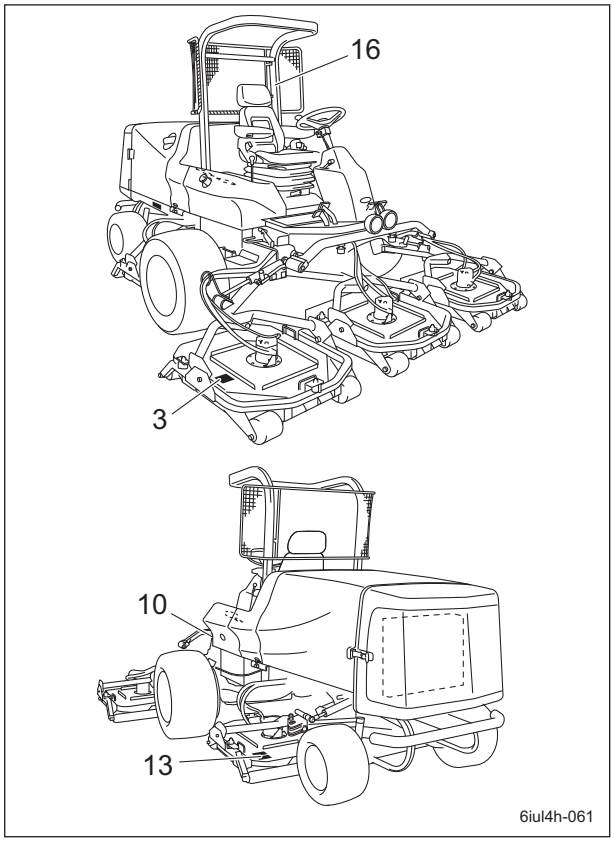

Positions of Safety Decals and Instruction Decals_001

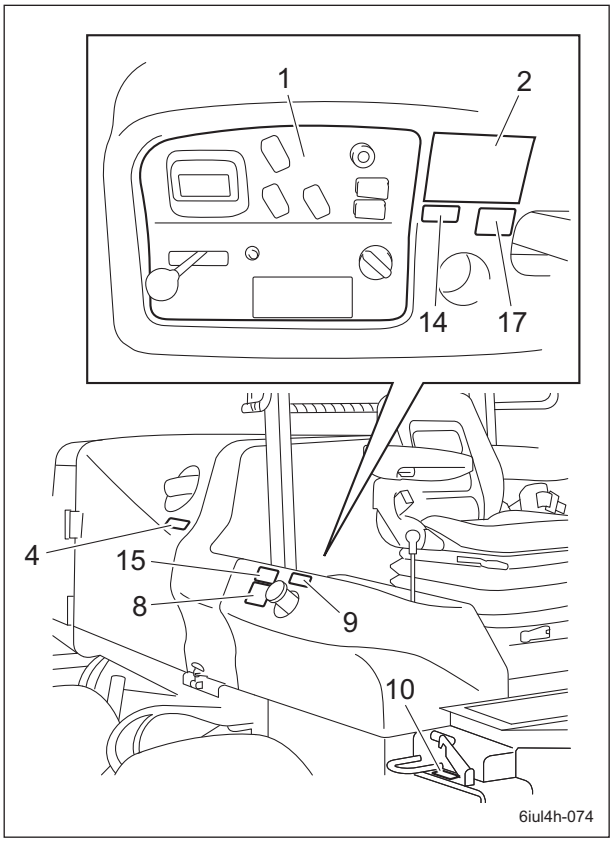

Positions of Safety Decals and Instruction Decals_002

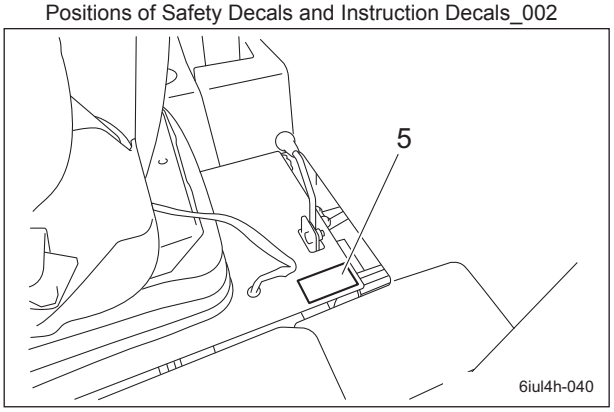

Positions of Safety Decals and Instruction Decals_003

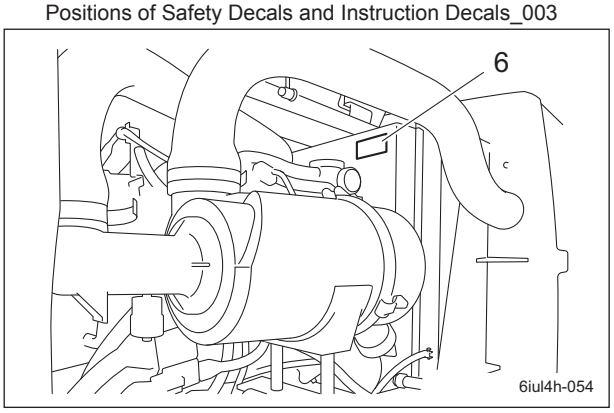

Positions of Safety Decals and Instruction Decals_004

https://truckmanualshub.com/

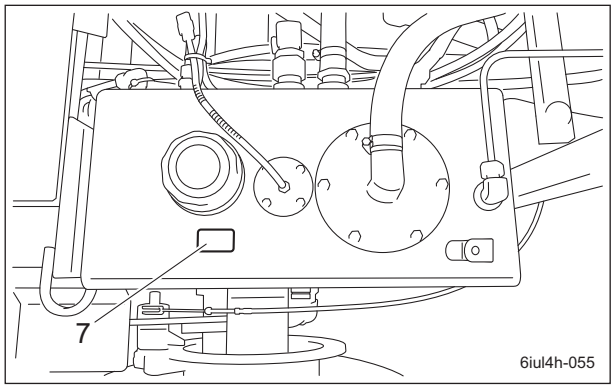

Positions of Safety Decals and Instruction Decals_005

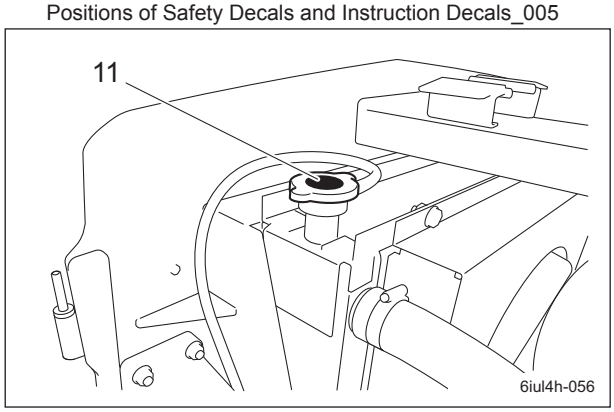

Positions of Safety Decals and Instruction Decals_006

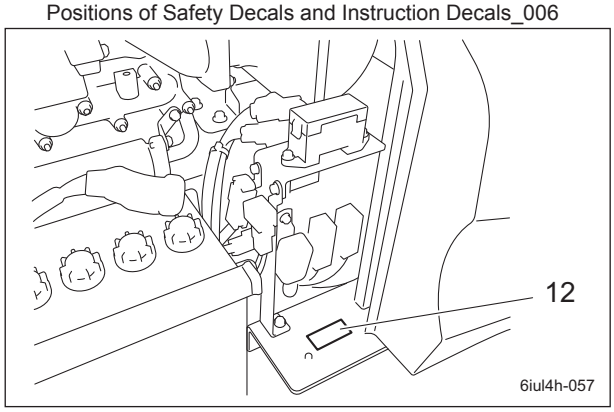

Positions of Safety Decals and Instruction Decals_007

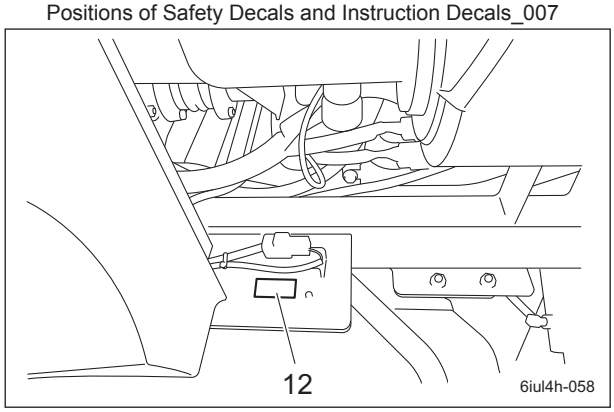

Positions of Safety Decals and Instruction Decals_008

https://truckmanualshub.com/

Description of Safety Decals and Instruction Decals

1	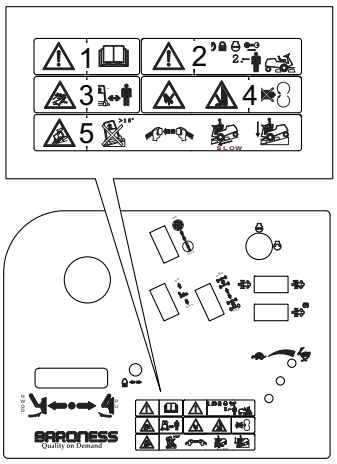 qigqnx-082	GM2810-0903Z0 Decal, operation 1. **Warning** Read the Owner's Operating Manual. 2. **Warning** Apply the parking brake, stop the engine, and then remove the ignition key before leaving the machine. 3. **Danger** Flying objects - Be sure that people around the machine keep a safe distance away. 4. **Danger** May cut your hand or leg - Keep hands and feet away from moving parts. 5. **Danger** Rollover - Do not work on any slopes of 15 degrees or more. When you descend a slope, fasten your seatbelt, lower the mower units, and then drive at low speed.
2	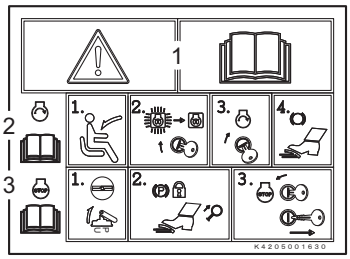 qigqnx-033	K4205001630 Decal, start/stop 1. **Warning** Read the Owner's Operating Manual. 2. Procedure to Start Engine Read the Owner's Operating Manual. [1] Sit on the seat. [2] Turn the key to the "ON (GLOW)" position, and then wait for the "BARONESS" logo to go off. [3] Turn the key to the "START" position. [4] Depress the brake pedal to release the parking brake.

https://truckmanualshub.com/

2	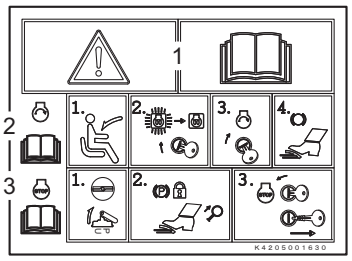 qigqnx-033	3. Procedure to Stop Engine [1] Set the knife rotation switch to the "OFF" position, and then raise the mower units. [2] Apply the parking brake. [3] Turn the key to the "STOP" position, and then remove it.
3	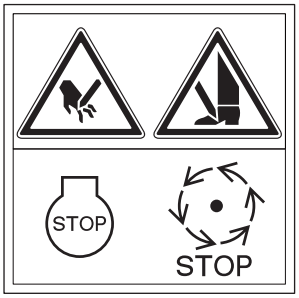 qigqnx-010	K4205001600 Decal, caution to mutilation **Danger** May cut your hand or leg - Stop the rotation and engine. Otherwise you may get injured.
4	 qigqnx-042	K4205001920 Decal, caution for high temperatures **Caution** High temperature - Do not touch. Otherwise, you will get burned.
5	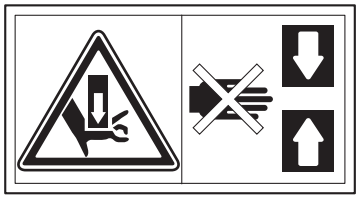 qigqnx-035	K4205001580 Decal, caution for pinching **Caution** May pinch - There is a risk of being pinched.
6	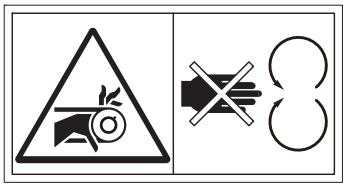 qigqnx-012	K4205001530 Decal, caution for rotating parts **Danger** Watch for rotating parts - Keep your hands away from the belts while the engine is running.
7	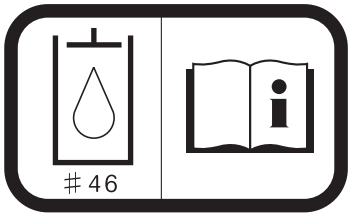 qigqnx-020	K4209000980 Decal, hydraulic oil Read the Owner's Operating Manual.

https://truckmanualshub.com/

8	qigqnx-021	K4209001000 Decal, diesel fuel refueling hole Use diesel fuel.
9	qigqnx-041	K4205001940 Decal, keep away from fire **Danger** Keep fire away.
10	qigqnx-067	K4205001900 Decal, caution for mower lock
11	qigqnx-045	K4205001970 Decal, caution for spouting coolant **Caution** Caution for spouting coolant - Do not open while hot.
12	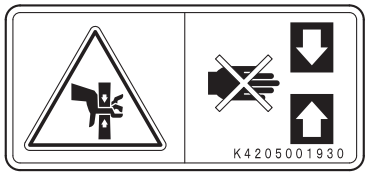 qigqnx-038	K4205001930 Decal, caution for pinching **Caution** May pinch - There is a risk of being pinched.
13	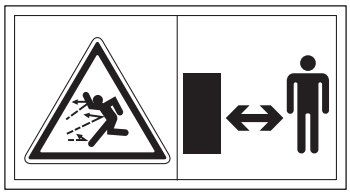 qigqnx-011	K4205001650 Decal, caution for flying object **Danger** Flying objects - Be sure that people around the machine keep a safe distance away.
	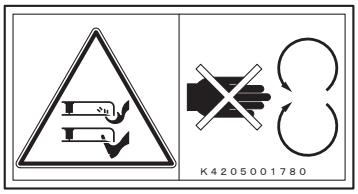 qigqnx-034	K4205001780 Decal, caution for cutting hands/feet **Danger** May cut your hand or leg - When the blades are rotating, keep away from the machine.

https://truckmanualshub.com/

14	qigqnx-039	K4205001950 Decal, caution to exhaust gas Warning Caution for exhaust gas
15	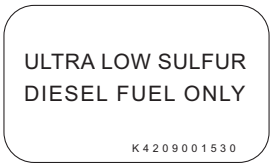 qigqnx-083	K4209001530 Decal, diesel instructions Use ultra-low sulfur diesel fuel (sulfur-free diesel fuel).
16	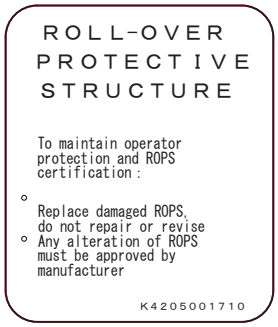 qigqnx-072	K4205001710 Decal, ROPS caution Replace damaged ROPS. Do not repair or modify. (Only when equipped with ROPS)
17	qigqnx-015	K4205002090 Decal, caution to noise

https://truckmanualshub.com/

Inspection Before Use ..... Page 4-2

Rotary Knife ..... Page 4-2
Radiator Cover ..... Page 4-2
Radiator ..... Page 4-3
Coolant ..... Page 4-3
Oil cooler ..... Page 4-5
Hydraulic Oil ..... Page 4-6
Air Cleaner ..... Page 4-7
Battery ..... Page 4-8
Tire ..... Page 4-9
Brake ..... Page 4-9
Wire ..... Page 4-10
Belt ..... Page 4-10
Around the Engine ..... Page 4-10
Engine Oil ..... Page 4-10
Fuel ..... Page 4-12
Water Separator ..... Page 4-13
Oil Leakage ..... Page 4-14

Tightening torques ..... Page 4-15

Standard tightening torques ..... Page 4-15
Principal tightening torques ..... Page 4-17

Adjustment Before Operating ..... Page 4-19

Adjustment of Steering Wheel ..... Page 4-19
Adjustment of Seat ..... Page 4-19
Adjustment of Cutting Height ..... Page 4-20

Procedure to Start / Stop Engine ..... Page 4-22

Start / Stop of Engine ..... Page 4-22
Safety Mechanisms ..... Page 4-23
Warning Mechanisms ..... Page 4-23

Operation of Each Section ..... Page 4-24

Precautions for Operating the Machine ..... Page 4-24
Cautions for when You Leave the Machine ..... Page 4-24
Instruction Decals ..... Page 4-24
Proximity Sensors ..... Page 4-28
Relays ..... Page 4-28
Knife Rotation Switch ..... Page 4-28
2WD/4WD Selector Switch ..... Page 4-29
DPF Auto Regeneration Inhibit Switch ..... Page 4-29
DPF Parked Regeneration Switch ..... Page 4-30
Light Switch ..... Page 4-30
Traction Assist Switch ..... Page 4-31
Mower Lock Lever (Latch) ..... Page 4-31
Mower Unit Up/Down Lever ..... Page 4-31
Throttle Knob ..... Page 4-32
Diff-Lock Switch ..... Page 4-32
Traveling Pedal ..... Page 4-32
Brake Pedal ..... Page 4-33
Parking Brake Lever ..... Page 4-34
Hood ..... Page 4-34
Underseat Cover ..... Page 4-34

Instruments ..... Page 4-35

Description of Monitor ..... Page 4-35
Main Menu Items ..... Page 4-35

Travel of Machine ..... Page 4-64

Moving the Machine ..... Page 4-64
Towing the Machine ..... Page 4-64

Cutting Work ..... Page 4-65

Cutting Work ..... Page 4-65

Transporting ..... Page 4-66

Transporting Procedure ..... Page 4-66

https://truckmanualshub.com/

Inspection Before Use

Be sure to perform an inspection before you start using the machine so that you will be able to take advantage of its optimum performance for a long period of time.

Rotary Knife

Inspection of Rotary Knife

Danger

The rotary knife is an edged tool.
Handle them carefully, since they could cut your hands or legs.

Caution

When touching edged tools, wear gloves, since they could cut your hands.

Due to frequent use, objects crushed during mowing, or damage during transportation and so forth, the rotary knife may vibrate from imbalance or become dull.
Inspect the rotary knife, and if necessary, resharpen, balance or replace it.

Important

Frequently inspect the rotary knife since it may become dull quickly if the machine is operated in an environment of dry soil or sand.

1. Make sure that the rotary knife is not bent.
2. Make sure that the rotary knife is not chipped.
3. Check to see how much the rotary knife is worn.
4. Make sure that the rotary knife is not worn asymmetrically.
5. Make sure that the mounting bolt for the rotary knife is not loose.
6. Make sure that there are no cracks or tears between the sail and flat part of the rotary knife.

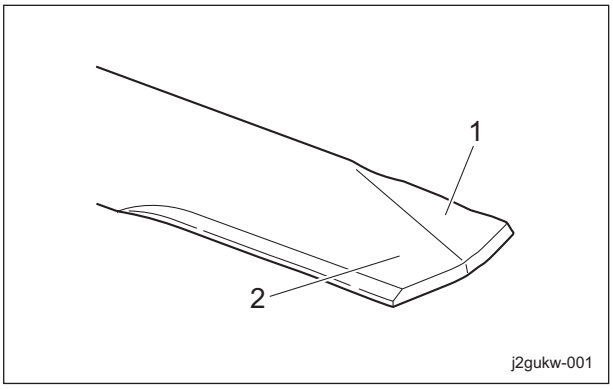

Inspection of Rotary Knife_001

1	Sail
2	Flat part

Radiator Cover

Inspection of Radiator Cover

1. Make sure that there is no damage to the radiator cover.
2. Make sure that the radiator cover is not contaminated.

Cleaning of Radiator Cover

Important

An unclean radiator cover may cause overheating or damage to the engine.
It may also cause malfunction of the hydraulic system.

If the radiator cover has been contaminated with dust, be sure to clean it.
After operating the machine in a dusty environment, it is important to remove dust from the cover as soon as possible.

1. Open the radiator cover.

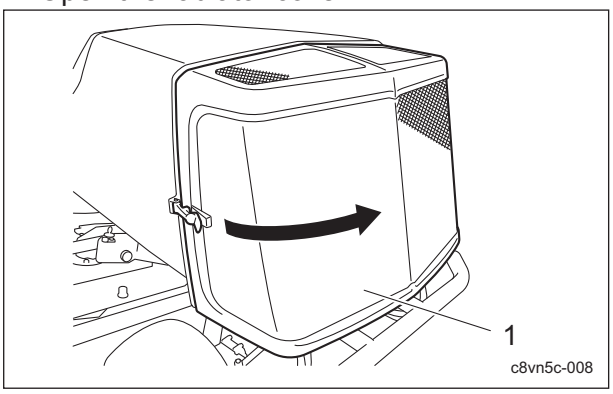

Cleaning of Radiator Cover_001

1	Radiator cover

2. Carefully clean the front and back of the radiator cover with water or compressed air.

https://truckmanualshub.com/

Radiator

Inspection of Radiator

For details on handling the engine, please refer to the Engine's Owner's Manual.

1. Make sure that there is no damage to the radiator.
2. Make sure that the radiator is not contaminated.

Cleaning of Radiator

For details on handling the engine, please refer to the Engine's Owner's Manual.

Important

An unclean radiator may cause overheating or damage to the engine.
It may also cause malfunction of the hydraulic system.

Important

Do not use solid objects, such as a spatula or screwdriver, or high-pressure water to clean the radiator or oil cooler.
Otherwise, special fins or tubes may be damaged, possibly resulting in reduced cooling performance or coolant leakage.

If the radiator has been contaminated with dust, be sure to clean it.
After operating the machine in a dusty environment, it is important to remove dust as soon as possible.

1. Open the radiator cover.
2. Unlock the rubber catches on the left and right of the oil cooler, and then tilt the oil cooler.

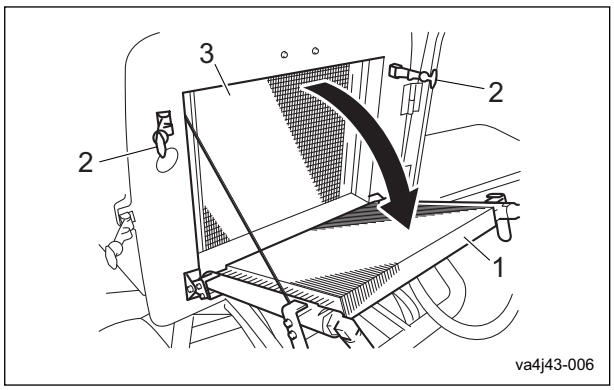

Cleaning of Radiator_001

1	Oil cooler
2	Rubber catch
3	Radiator

3. Carefully clean the front and back of the radiator with water or compressed air.

Coolant

Inspection of Coolant

For details on handling the engine, please refer to the Engine's Owner's Manual.

Warning

Do not touch the radiator or coolant during engine operation or right after the engine has been turned off.
Due to high temperatures, doing so could cause burns.

Caution

Inspection should take place after the engine has well cooled down.

1. Make sure that the coolant level in the reserve tank is between "Full" and "Low."

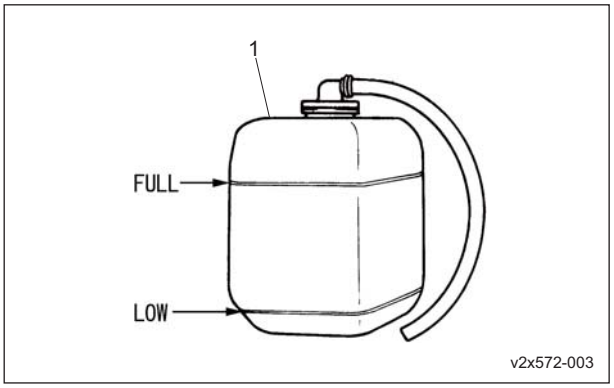

Inspection of Coolant_001

1	Reserve tank

https://truckmanualshub.com/

Coolant Supply

For details on handling the engine, please refer to the Engine's Owner's Manual.

Warning

Do not touch the radiator or coolant during engine operation or right after the engine has been turned off.
Due to high temperatures, doing so could cause burns.
After the radiator has well cooled down, open the radiator cap.

Caution

Supply coolant after the engine has well cooled down.

Caution

The radiator cap is pressurized.
If you remove the radiator cap while the engine is overheated, hot steam will burst out, possibly resulting in burns.
Make sure that the water temperature and pressure are reduced, and then grab the cap with a thick cloth and gradually open the cap.

Important

When you supply coolant, be sure to use clean water, such as tap water.
During winter, remove coolant. Alternatively, mix long-life coolant and clean water, and then pour it into the radiator and reserve tank.

Relationship between concentration of long-life coolant (LLC) and freezing temperature

Freezing temperature	LLC concentration (volume %)
Down to -10°C (14°F)	20 %
Down to -15°C (5°F)	30 %
Down to -20°C (-4°F)	35 %
Down to -25°C (-13°F)	40 %

1. If the coolant level in the reserve tank is lower than the "LOW" mark, open the reserve tank cap and fill the tank with clean water up to the "FULL" mark.

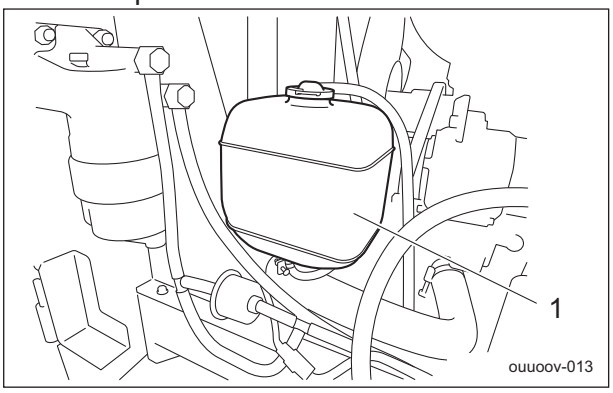

Coolant Supply_001

1	Reserve tank

2. If no coolant is in the reserve tank, follow the steps below to fill the tank with clean water.
   [1] Open the radiator cap, and then supply clean water up to the opening.
   [2] Open the reserve tank cap, and then supply clean water up to the "FULL" mark.

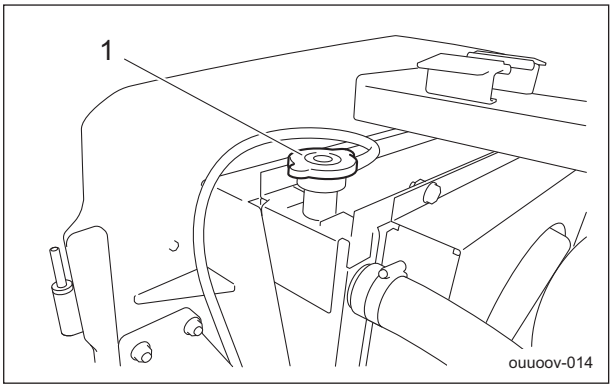

Coolant Supply_002

1	Radiator cap

https://truckmanualshub.com/

Change of Coolant

For details on handling the engine, please refer to the Engine's Owner's Manual.

Warning

When you replace the coolant, be sure to drain it into a bowl and discard it in accordance with local laws and regulations.

Warning

Do not touch the radiator or coolant during engine operation or right after the engine has been turned off.
Otherwise, you may get burned due to high temperatures.
After the radiator has well cooled down, open the radiator cap.

Caution

Change coolant after the engine has well cooled down.

Important

When you change coolant, be sure to use clean water, such as tap water.
During winter, remove coolant. Alternatively, mix long-life coolant and clean water, and then pour it into the radiator and reserve tank.

For details on changing coolant, please refer to the separate Engine Operating Manual.
Coolant quantity, including that of the reserve tank, is 12.0 dm^3 (12.0 L).

Oil cooler

Inspection of Oil Cooler

1. Make sure that there is no damage to the oil cooler.
2. Make sure that the oil cooler is not contaminated.

Cleaning of Oil Cooler

Caution

An unclean oil cooler may cause overheating or damage to the engine.
It may also cause malfunction of the hydraulic system.

Important

Do not use solid objects, such as a spatula or screwdriver, or high-pressure water to clean the radiator or oil cooler.
Otherwise, special fins or tubes may be damaged, possibly resulting in reduced cooling performance or coolant leakage.

If the oil cooler has been contaminated with dust, be sure to clean it.
After operating the machine in a dusty environment, it is important to remove dust as soon as possible.

1. Open the radiator cover.
2. Unlock the rubber catches on the left and right of the oil cooler, and then tilt the oil cooler.

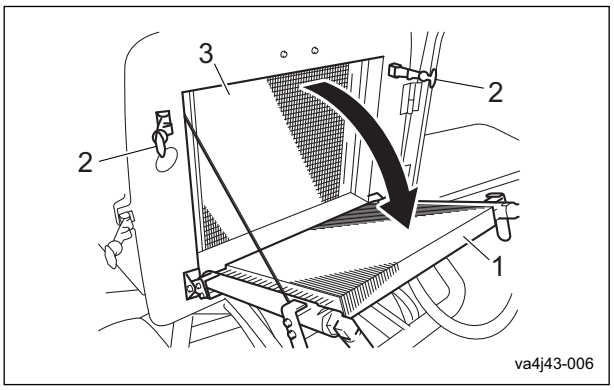

Cleaning of Oil Cooler_001

1	Oil cooler
2	Rubber catch
3	Radiator

3. Carefully clean the front and back of the oil cooler with water or compressed air.

https://truckmanualshub.com/

Hydraulic Oil

Inspection of Hydraulic Oil

The oil gauge is on the side of the hydraulic tank.

1. Raise the mower units and maintain that position on a level surface.
2. Make sure that the oil level is at the middle of the oil gauge.

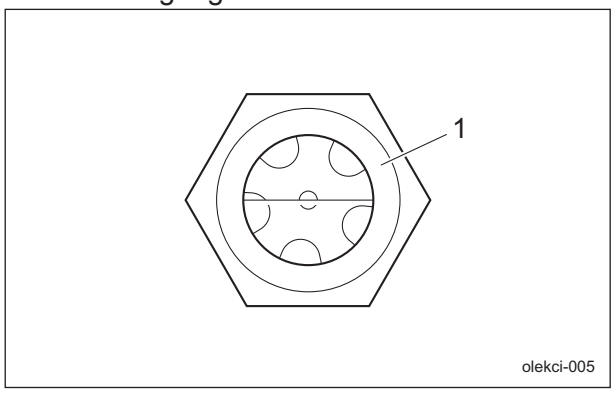

Inspection of Hydraulic Oil_001

1	Oil gauge

3. Check underneath the machine for oil leakage.

Hydraulic Oil Supply

Important

Do not mix different types of oil.

Important

Use Shell Tellus S2M46 (or equivalent) as hydraulic oil.

1. If the oil level is low, remove the left tank cover, and then open the tank cap and supply oil.

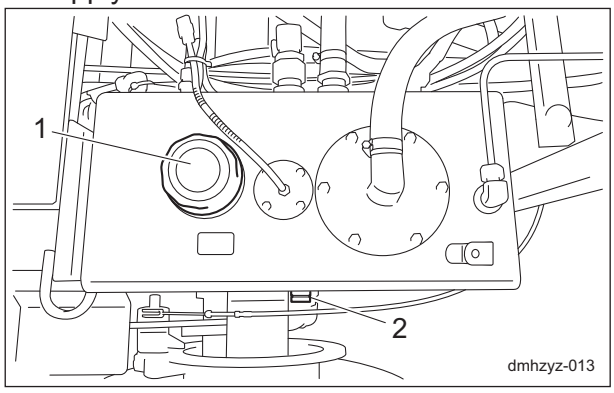

Hydraulic Oil Supply_001

1	Tank cap
2	Oil gauge

2. Tighten the tank cap securely.
3. Start the engine, raise and lower the mower units, and turn the steering wheel left and right.
   Move forward and reverse repeatedly several times.
4. Raise the mower units and maintain that position on a level surface, and then check to see if the oil level is at the middle of the oil gauge. If necessary, supply oil.
5. Check underneath the machine for oil leakage.
6. Attach the left tank cover.

Change of Hydraulic Oil

Warning

When you change the hydraulic oil, be sure to drain it into a bowl and discard it in accordance with local laws and regulations.

Caution

If the oil emulsifies or if it becomes even slightly less transparent, change the oil immediately.

Caution

Be careful with hot oil, which could cause burns if it contacts your skin.

Important

Use Shell Tellus S2M46 (or equivalent) as hydraulic oil.

1. Follow the steps below to remove the old oil.
   [1] Start and run the engine to warm up the oil.
   [2] On a level surface, lower the mower units, and then stop the engine.
   [3] Remove the drain plug of the hydraulic tank, and then drain the old oil into a container.

https://truckmanualshub.com/

[4] Wind new sealing tape on the drain plug, and then attach it to the hydraulic tank.

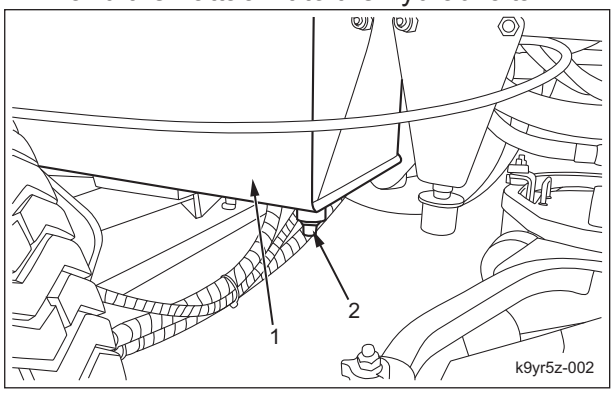

Change of Hydraulic Oil_001

1	Hydraulic tank
2	Drain plug

2. Remove the left tank cover.
3. Open the tank cap, and then pour new oil from the fill port until the oil level reaches the middle of the oil gauge on the hydraulic tank.
   The hydraulic tank capacity is approximately 44.0 dm^3 (44.0 L).

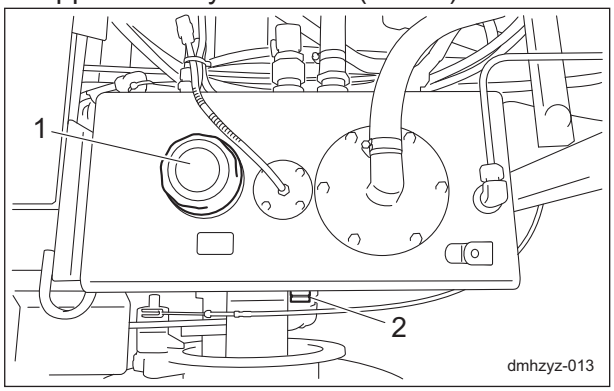

Change of Hydraulic Oil_002

1	Tank cap
2	Oil gauge

4. Tighten the tank cap securely.
5. Start the engine, raise and lower the mower units, and turn the steering wheel left and right.
   Move forward and reverse repeatedly several times.
6. Raise the mower units and maintain that position on a level surface, and then check to see if the oil level is at the middle of the oil gauge. If necessary, supply oil.
7. Check underneath the machine for oil leakage.
8. Attach the left tank cover.

Air Cleaner

Inspection of Air Cleaner

For details on handling the engine, please refer to the Engine's Owner's Manual.
Liners and piston rings so that the engine will always operate smoothly.
A contaminated air cleaner element may cause malfunction of the engine.

1. Inspect the air cleaner by checking the vacuum indicator.
   If the air cleaner element is contaminated, the vacuum indicator will display a red ring.

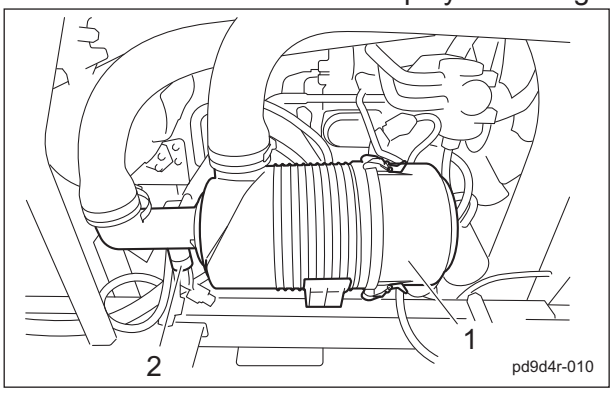

Inspection of Air Cleaner_001

1	Air cleaner
2	Vacuum indicator

2. Make sure that there is no damage to the air cleaner.
3. Make sure that the air cleaner is not contaminated.

Cleaning of Air Cleaner

For details on handling the engine, please refer to the Engine's Owner's Manual.
A contaminated air cleaner element may cause malfunction of the engine.
To maximize the life of the engine, clean the air cleaner properly.

1. Follow the steps below to clean the outer element.
   [1] Remove the clips from the three locations, remove the air cleaner cap, and then remove the outer element.
   [2] While paying close attention not to damage the outer element, tap a solid portion of the outer element or blow compressed air from its inside to remove dust and dirt.
   If the outer element is extremely contaminated, replace it with a new one.

https://truckmanualshub.com/

[3] Attach the outer element to the air cleaner body.

[4] Replace the air cleaner cap, and then fix it securely using the clips.

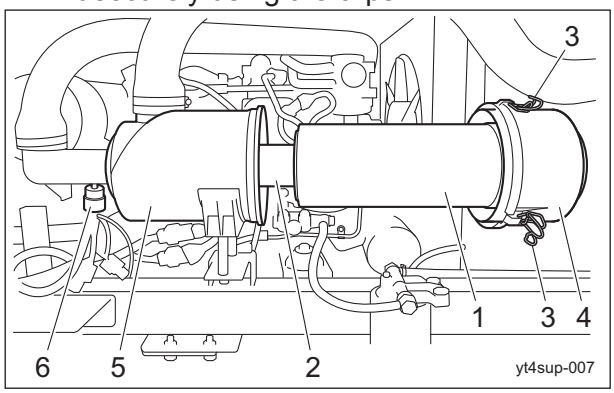

Cleaning of Air Cleaner_001

1	Outer element
2	Inner element
3	Clip
4	Air cleaner cap
5	Air cleaner body
6	Vacuum indicator

2. Press the reset button for the vacuum indicator.

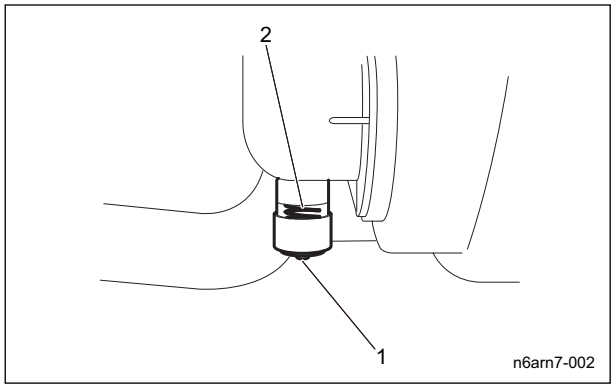

Cleaning of Air Cleaner_002

1	Reset button
2	Vacuum indicator

Important

The inner element cannot be cleaned.

3. Replace the inner element every year or when it becomes damaged or dirty.

Change of Air Cleaner

For details on handling the engine, please refer to the Engine's Owner's Manual.
A contaminated air cleaner element may cause malfunction of the engine.
To maximize the life of the engine, replace the air cleaner element at the appropriate times.

1. The timing for replacing the air cleaner element is described below.
   [1] Replace the air cleaner element in accordance with the Maintenance Schedule.
   [2] If it is significantly contaminated, replace it, even if the hours of operation do not exceed the specified time.
2. Replace the air cleaner element in the same manner as cleaning the air cleaner. "Cleaning of Air Cleaner" (Page 4-7)

Battery

Inspection of Battery

For details on handling the battery, please refer to the Battery's Owner's Manual.

Danger

Keep away from fire while inspecting or charging the battery.
The battery may explode.

Warning

Do not allow the battery fluid level to become lower than the LOWER LEVEL (minimum fluid level line).
The battery may explode if it is used or charged while the battery fluid level is at the LOWER LEVEL (minimum fluid level line).

Caution

Perform operations after the muffler and engine have sufficiently cooled.
Otherwise, you may suffer burns.

1. Clean the areas around the battery fluid level lines using a cloth damped with water.

https://truckmanualshub.com/

2. Make sure that the battery fluid level is between the UPPER LEVEL (maximum fluid level line) and the LOWER LEVEL (minimum fluid level line).

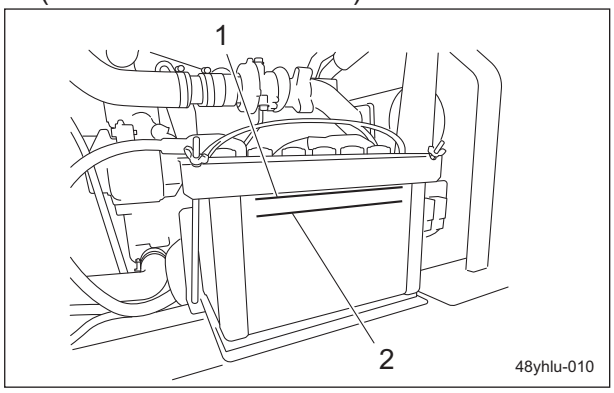

Inspection of Battery_001

1	UPPER LEVEL
2	LOWER LEVEL

Supply of Battery Fluid

For details on handling the battery, please refer to the Battery's Owner's Manual.

Danger

Be careful not to let your skin, eyes or clothes, etc., come into contact with the battery fluid or accidentally swallow the fluid.
Should your skin or clothes come into contact with the battery fluid, immediately wash them away with water.

Warning

When you supply battery fluid, wear protective garments and safety glasses, etc.

Caution

Implement after the engine and muffler etc. have well cooled down.
Otherwise you may get burned.

1. If the battery fluid level is lower than halfway between the UPPER LEVEL (maximum) line and LOWER LEVEL (minimum) line, add purified water up to the UPPER LEVEL (maximum) line.

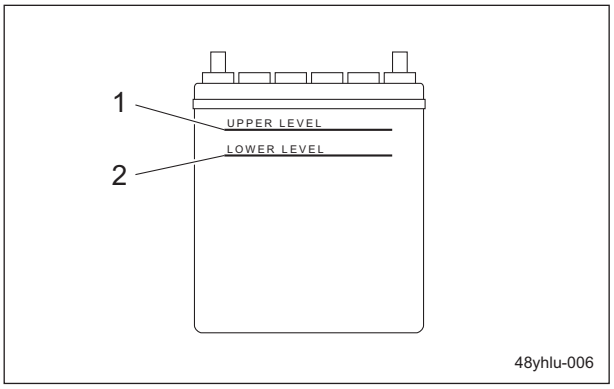

Supply of Battery Fluid_001

1	UPPER LEVEL
2	LOWER LEVEL

Tire

Inspection of Tires

1. Check the pneumatic pressure of the tires.
2. Make sure that there are no cracks, damage or abnormal wear.

Tire size	Pneumatic pressure
Front wheel (29 x 14.00 - 15)	150 kPa (1.5 kgf/cm^2)
Rear wheel (20 x 12.00 - 10)	140 kPa (1.4 kgf/cm^2)

Brake

Inspection of Brake

While traveling, depress the brake pedal firmly to make sure that the brake is applied effectively.

Inspection of Parking Brake

1. Make sure that the parking brake is applied after depressing the brake pedal and pulling the parking brake lever.
2. Make sure that the parking brake is not applied even slightly after depressing the brake pedal to release the parking brake lever.

https://truckmanualshub.com/

Wire

Inspection of Wire

1. Make sure that the wire is not cracked or damaged.
2. If the wire is cracked or damaged, replace it with a new one immediately.

Belt

Inspection of Belt

Caution

The engine must be stopped when the belt is inspected.

Caution

If you have removed the cover during inspection, make sure that you replace it in the original position securely.
If the cover remains removed, the operator may come in contact with the rotating objects or belt, possibly resulting in injuries.

Important

A slacking or damaged belt or damaged fan may cause overheating or lack of a battery charge.

1. Press the middle of the belt with your finger to check the belt tension.
2. Make sure that there are no cracks, damage or abnormal wear.

Around the Engine

Inspection of Engine-Associated Parts

For details on handling the engine, please refer to the Engine's Owner's Manual.

1. Check the fuel system parts for loosened or cracked joints and leakage. Replace the parts if necessary.
2. Blow compressed air to clean any grass or flammable materials that may be attached on or around the muffler.

Engine Oil

Inspection of Engine Oil

Important

Securely tighten the oil level gauge and oil filler cap.

1. Stop the engine, wait for 10 to 20 minutes for the engine to cool down, and then check the oil level.
2. Position the machine so that the engine will be level, and then insert the oil level gauge all the way to check the oil level.

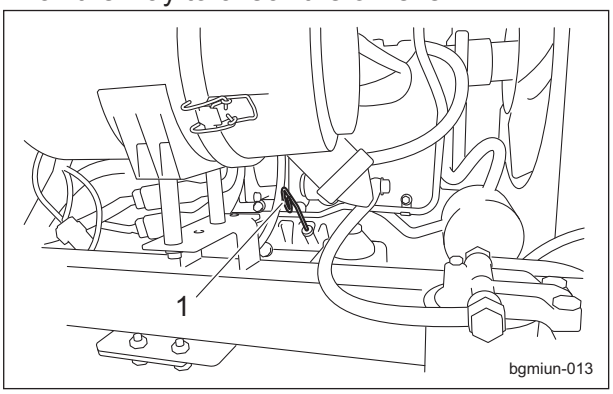

Inspection of Engine Oil_001

1	Oil gauge

3. The appropriate oil level should be between the upper and lower limit lines on the gauge.

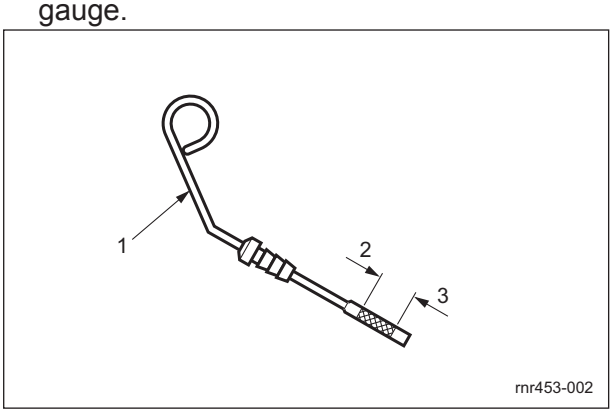

Inspection of Engine Oil_002

1	Oil level gauge
2	Upper limit
3	Lower limit

https://truckmanualshub.com/

Supply of Engine Oil

For details on handling the engine, please refer to the Engine's Owner's Manual.

Important

Do not supply too much engine oil. Otherwise, the engine may be damaged.

Important

Do not mix different types of engine oil.

Important

Be sure to use engine oil that is classified as JASO DH-2 or API Service Grade CJ-4, with SAE viscosity that is appropriate for the operating environment (ambient temperature).

Important

Securely tighten the oil level gauge and oil filler cap.

1. If the engine oil level is lower than the lower limit line on the oil level gauge, supply engine oil through the oil filling port. Remove the oil filler cap, and then supply new engine oil until the oil reaches a level in between the upper and lower limit lines on the oil level gauge.
2. Replace the oil filler cap.

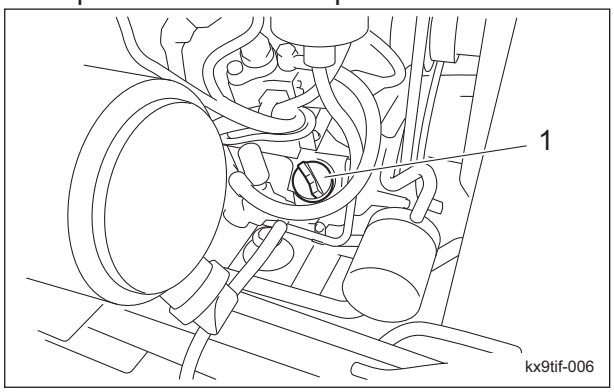

Supply of Engine Oil_001

1	Oil filler cap

3. It will take a while for the supplied engine oil to descend into the oil pan.
   Check the oil level again 10 to 20 minutes after supplying the oil.

Change of Engine Oil

For details on handling the engine, please refer to the Engine's Owner's Manual.

Warning

When you change the engine oil, be sure to drain it into a bowl and discard it in accordance with local laws and regulations.

Caution

Be careful with hot oil, which could cause burns if it contacts your skin.

Important

Be sure to use engine oil that is classified as JASO DH-2 or API Service Grade CJ-4, with SAE viscosity that is appropriate for the operating environment (ambient temperature).

Important

Securely screw in the oil level gauge and oil filler cap.

Change the engine oil more frequently if the engine oil is contaminated, or if you use the machine in dusty areas or operate the engine at high loads or in high temperatures.

1. Move the machine onto a level surface, stop the engine, remove the drain plug while the engine oil is warm, and then drain the oil into a bowl.
2. Replace the drain plug in the engine.

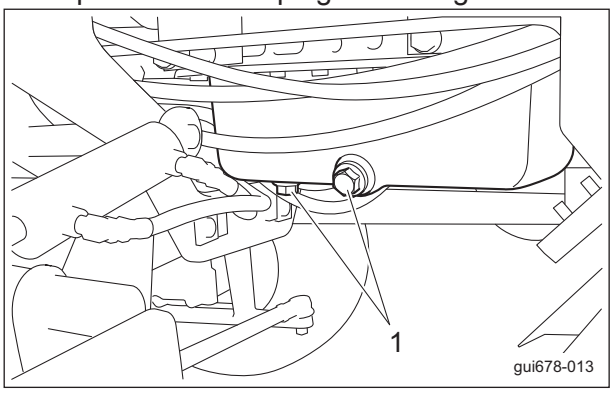

Change of Engine Oil_001

1	Drain plug

https://truckmanualshub.com/

3. Through the oil filling port, supply new engine oil until the oil reaches a level in between the upper and lower limit lines on the oil level gauge.
   Engine oil quantity is approximately 9.7 dm^3 (9.7 L).
4. Replace the oil filler cap.

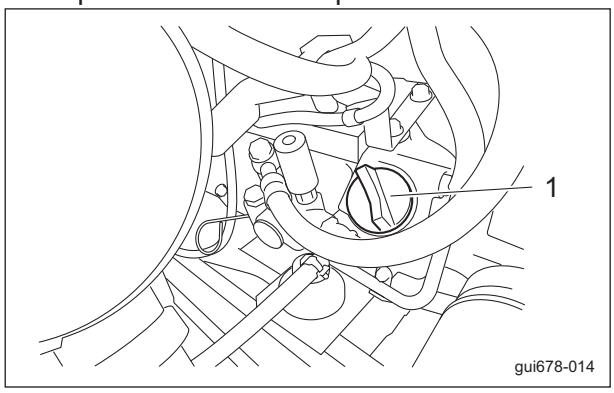

Change of Engine Oil_002

1	Oil filler cap

5. It will take a while for the supplied engine oil to descend into the oil pan.
   Check the oil level again 10 to 20 minutes after supplying the oil.

Fuel

Inspection of Fuel Quantity

With the machine on a level surface, observe the fuel level in the monitor to check the fuel level.

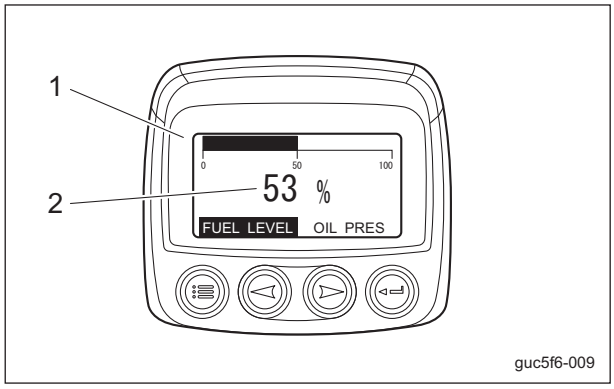

Inspection of Fuel Quantity_001

1	Monitor
2	Fuel level

Fuel Supply

Danger

Do not supply additional fuel after the fuel level indicates 100%.
If you supply too much fuel, it might overflow from the fuel cap when you travel or work on a slope.

Warning

Keep fire away while refueling.
Do not smoke while refueling.

Caution

Use ultra-low sulfur diesel fuel (sulfur-free diesel fuel).

For details on fuel types, please refer to the Engine's Owner's Manual.
If the fuel level in the monitor indicates a level close to 0%, supply fuel (diesel) at your earliest convenience.
The fuel tank capacity is approximately 51.0 dm^3 (51.0 L).

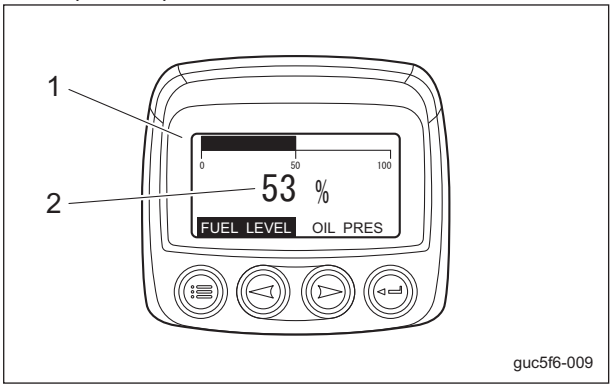

Fuel Supply_001

1	Monitor
2	Fuel level

https://truckmanualshub.com/

Air Bleeding of Fuel System

A priming pump is installed on the feed pump. Repeat pushing the top of the priming pump with a finger until feeling resistance to bleed air from the fuel system.

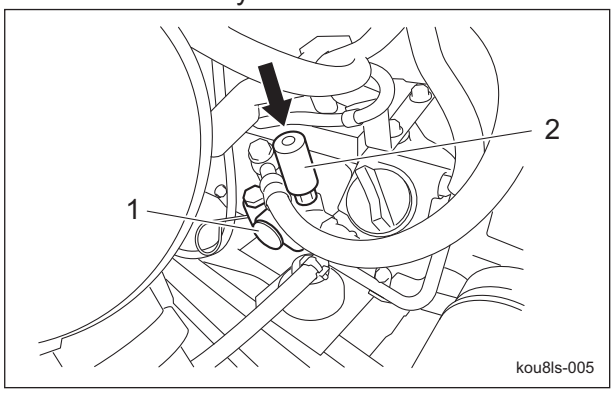

Air Bleeding of Fuel System_001

1	Feed pump
2	Priming pump

Water Separator

Inspection of Water Separator

For details on handling the engine, please refer to the Engine's Owner's Manual.

> **Important**
>
> If water contaminates the fuel, the supply pump and injector may seize.

The water separator removes water from the fuel.

1. Make sure that debris and water have not accumulated in the cup.
   With the float raised, water incorporation is confirmed.

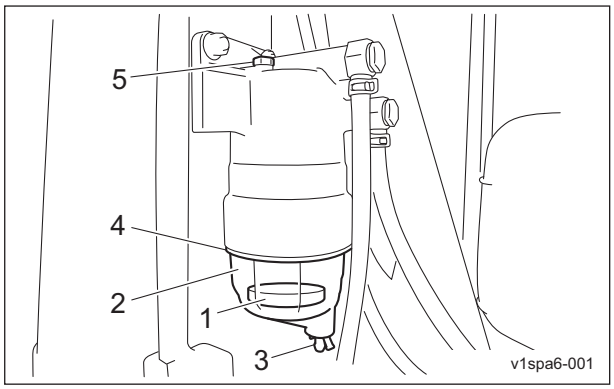

Inspection of Water Separator_001

1	Float
2	Cup
3	Water drain plug
4	Element
5	Air-bleeding bolt

Draining of Water Separator

For details on handling the engine, please refer to the Engine's Owner's Manual.

> **Important**
>
> If water contaminates the fuel, the supply pump and injector may be burnt out.

Drain the water at least every 50 hours and whenever the float is raised by water.

1. Follow the steps below to drain the water.
   [1] Stop the engine, and then turn the key switch to the "OFF" position.
   [2] Place a container under the water separator.
   [3] Loosen the water drain plug and air-bleeding bolt to drain the water into the container.

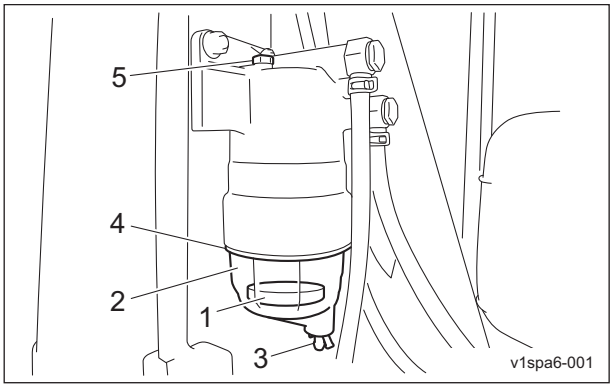

Draining of Water Separator_001

1	Float
2	Cup
3	Water drain plug
4	Element
5	Air-bleeding bolt

   [4] Tighten the water drain plug and air-bleeding bolt.
   [5] Bleed air from the fuel system.

https://truckmanualshub.com/

Cleaning of Water Separator

For details on handling the engine, please refer to the Engine's Owner's Manual.

Important

If water contaminates the fuel, the supply pump and injector may be burnt out.

Clean the water separator at least every 500 hours and whenever debris has accumulated in the cup.

1. Follow the steps below to clean the water separator.
   [1] Stop the engine, and then turn the key switch to the "OFF" position.
   [2] Place a container under the water separator.
   [3] Remove and clean the cup, element and float.
   Replace the element with a new one when replacement needed.

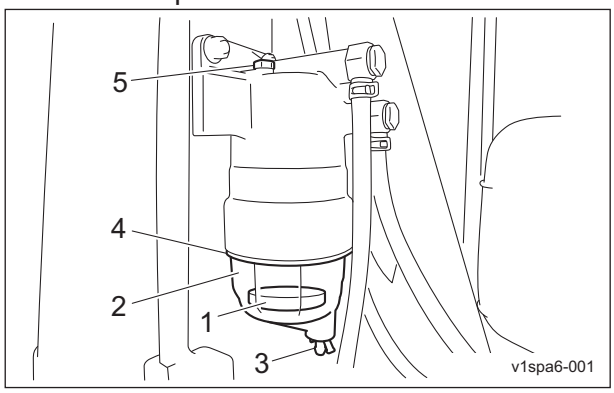

Cleaning of Water Separator_001

1	Float
2	Cup
3	Water drain plug
4	Element
5	Air-bleeding bolt

   [4] Install the cup, element and float in their original positions.
   [5] Bleed air from the fuel system.

Oil Leakage

Inspection of Oil Leakage

Caution

When performing maintenance on the hydraulic system, lower the mower units.

After approximately 50 hours of operation, some tightened portions may be loosened and oil and grease may leak.
Be sure to retighten the parts.
Check the bottom of the machine for oil and grease leakage.

https://truckmanualshub.com/

Tightening torques

Standard tightening torques

Bolts and Nuts

Important

A number of bolts are used in each part of this machine.
Be sure to re-tighten the bolts and nuts, because they may be loosened at the earlier stage of the use.

As to the bolts and nuts without any special instruction, tighten them in appropriate tightening torque with proper tool.
Too much tightening may cause the looseness or damage of the screw.
The strength of tightening is determined by types of screws, strength, the friction of thread face or base face and others.
The table below is for the galvanized or parkerized bolts.
In case that the strength of internal thread is weak, it is not applied.
Do not use rusty or sand attached "screw."
Otherwise, it may cause insufficient tightening even if you apply the specified tightening torque.
The friction of the screw face becomes higher and the tightening torque is canceled out by the friction, therefore sufficient tightening cannot be applied.
If "screw" is wet by water or oil, do not tighten it with normal tightening torque.
If the screw is wet, the torque coefficient will get smaller and it may result in too much tightening.
Too much tightening may cause looseness by the screw stretched or result in damage.
Do not use a bolt experienced too much burden.
Using the impact wrench requires the skill.
Do exercise as much as possible for steady tightening.

Nominal diameter	General bolt		
	Strength classification 4.8		
	tib3yb-001		
	N-m	kgf-cm	lb-in
M5	3 - 5	30.59 - 50.99	26.55 - 44.26
M6	7 - 9	71.38 - 91.77	61.96 - 79.66
M8	14 - 19	142.76 - 193.74	123.91 - 168.17
M10	29 - 38	295.71 - 387.49	256.68 - 336.34
M12	52 - 67	530.24 - 683.20	460.25 - 593.02
M14	70 - 94	713.79 - 958.52	619.57 - 831.99
M16	88 - 112	897.34 - 1142.06	778.89 - 991.31
M18	116 - 144	1,182.85 - 1,468.37	1,026.72 - 1,274.54
M20	147 - 183	1,498.96 - 1,866.05	1,301.10 - 1,619.73
M22	295	3,008.12	2,611.05
M24	370	3,772.89	3,274.87
M27	550	5,608.35	4,868.05
M30	740	7,545.78	6,549.74

https://truckmanualshub.com/

Nominal diameter	Heat-treated bolt					
	Strength classification 8.8			Strength classification 10.9		
	tib3yb-002			tib3yb-003		
	N-m	kgf-cm	lb-in	N-m	kgf-cm	lb-in
M5	5 - 7	50.99 - 71.38	44.26 - 61.96	7 - 10	71.38 - 101.97	61.96 - 88.51
M6	8 - 11	81.58 - 112.17	70.81 - 97.36	14 - 18	142.76 - 183.55	123.91 - 159.32
M8	23 - 29	234.53 - 295.71	203.57 - 256.68	28 - 38	285.52 - 387.49	247.83 - 336.34
M10	45 - 57	458.87 - 581.23	398.30 - 504.51	58 - 76	591.43 - 774.97	513.36 - 672.68
M12	67 - 85	683.20 - 866.75	593.02 - 752.34	104 - 134	1,060.49 - 1,366.40	920.50 - 1186.03
M14	106 - 134	1,080.88 - 1,366.40	938.21 - 1,186.03	140 - 188	1,427.58 - 1,917.04	1,239.14 - 1,663.99
M16	152 - 188	1,549.94 - 1,917.04	1,345.35 - 1,663.99	210 - 260	2,141.37 - 2,651.22	1,858.71 - 2,301.26
M18	200 - 240	2,039.40 - 2,447.28	1,770.20 - 2,124.24	280 - 340	2,855.16 - 3,466.98	2,478.28 - 3,009.34
M20	245 - 295	2,498.27 - 3,008.12	2,168.50 - 2,611.05	370 - 450	3,772.89 - 4,588.65	3,274.87 - 3,982.95
M22	-	-	-	530	5,404.41	4,691.03
M24	-	-	-	670	6,831.99	5,930.17
M27	-	-	-	1,000	10,197.00	8,851.00
M30	-	-	-	1,340	14,628.78	11,860.34

Note:
The same values are applied to "fine screw thread."

https://truckmanualshub.com/

Principal tightening torques

Tightening Torque by Model

GM2810
Tighten the following bolts and nuts at the torque specified in the table.
For thread locking adhesive, apply a middle strength thread locker (ThreeBond 1322 or equivalent anaerobic sealant).

Location		Code	Part name	Tightening torque			Thread locking adhesive
				N-m	kgf-cm	lb-in	
Front wheel	Motor housing	K0014160402	Bolt, heat-treated M16-40P1.5	152 - 188	1549.94 - 1917.04	1345.35 - 1663.99	—
	Motor	K0013140502	Bolt, heat-treated M14-50	100	1019.7	885.1	—
	Wheel mounting base	1 1/4-18UNF	Slotted nut (Hydraulic motor)	400 - 430	4078.80 - 4384.71	3540.40 - 3805.93	—
	Disc brake	K0024080401	Bolt, w/hexagon hole, M8-40	28 - 38	285.52 - 387.49	247.83 - 336.34	—
	Wheel	K0014120652	Bolt, heat-treated M12-65P1.5	67 - 85	683.20 - 833.75	593.02 - 752.34	—
Rear wheel	Wheel mounting base	K0138240002	24 slotted nut high P1.5	180 - 200	1835.46 - 2039.40	1593.18 - 1770.20	—
	Wheel	K0014120652	Bolt, heat-treated M12-65P1.5	67 - 85	683.20 - 866.75	593.02 - 752.34	—
Front axle		K0015200702	Bolt, heat-treated M20-70P1.5	370 - 450	3772.89 - 4588.65	3274.87 - 3982.95	—
Brake ass'y		K1720000190	Bolt, heat-treated M12P1.75	150 ± 15	1529.55 ± 152.96	1327.65 ± 132.77	○
Engine		K0012120352	Bolt, heat-treated M12-35P1.25	67 - 134	683.20 - 1366.40	593.02 - 1186.03	—
		K0015120552	Bolt, heat-treated M12-55P1.25	67 - 134	683.20 - 1366.40	593.02 - 1186.03	—
		K0011100502	Bolt, heat-treated M10-50P1.25	45 - 76	458.87 - 774.97	398.30 - 672.68	—
		K0013121102	Bolt, heat-treated M12-110	67 - 134	683.20 - 1366.40	593.02 - 1186.03	—
Flywheel adapter		K0011100302	Bolt, heat-treated M10-30P1.25	45 - 76	458.87 - 774.97	398.30 - 672.68	—
		K0010100352	Bolt, heat-treated M10-35	45 - 76	458.87 - 774.97	398.30 - 672.68	—
Joint		K0024100401	Bolt, w/hexagon hole, M10-40	80	815.76	708.08	○
		K0013100352	Bolt, heat-treated M10-35	45 - 76	458.87 - 774.97	398.30 - 672.68	—
Kingpin stopper		K0010120502	Bolt, heat-treated M12-50	52 - 67	530.24 - 683.20	460.25 - 593.02	—
Tie rod		K1610000020	Slotted nut of tie rod end RH	45	458.87	398.30	—

https://truckmanualshub.com/

Location	Code	Part name	Tightening torque			Thread locking adhesive
			N-m	kgf-cm	lb-in	
Tie rod	K1611000020	Slotted nut of tie rod end LH	45	458.87	398.30	—
Piston pump	K0013120502	Bolt, heat-treated M12-50	67 - 134	683.20 - 1366.40	593.02 - 1186.03	—
Tandem gear pump	K0069000251	Bolt, 3/8-16 UNC 31.8	29 - 38	295.71 - 387.49	256.68 - 336.34	—
Pedal stopper	K0013101202	Bolt, heat-treated M10-120	29 - 38	295.71 - 387.49	256.68 - 336.34	—
Diff-lock valve	K0024100151	Bolt, w/hexagon hole, M10-15	29 - 38	295.71 - 387.49	256.68 - 336.34	—
Knife and knife guide	K0010120302	Bolt, heat-treated M12-30	67 - 85	683.20 - 866.75	593.02 - 752.34	—
Shoulder bolt	GM2800-0207Z2	Shoulder bolt	67 - 134	683.20 - 1366.40	593.02 - 1186.03	—
Bumper	K0010120302	Bolt, heat-treated M12-30	67 - 134	683.20 - 1366.40	593.02 - 1186.03	—
Cover mounting bracket	K0000080202	Bolt, M8-20	9 - 14	91.77 - 142.76	61.96 - 123.91	—

https://truckmanualshub.com/

Adjustment Before Operating

Adjustment of Steering Wheel

Warning

Since it is dangerous, do not adjust the steering wheel while traveling.

Caution

Be sure the steering wheel position is securely locked.
It would be extremely dangerous if it becomes loose while traveling.

The steering wheel can be adjusted up or down.
Adjust the position according to the operator's body size.
Shift the tilt lever to the "FREE" position, move the steering wheel to the position that suits your work requirements, and then shift the tilt lever to the "LOCK" position to secure the steering wheel in place.
The tilt lever is located in the right front of the driver’s position.

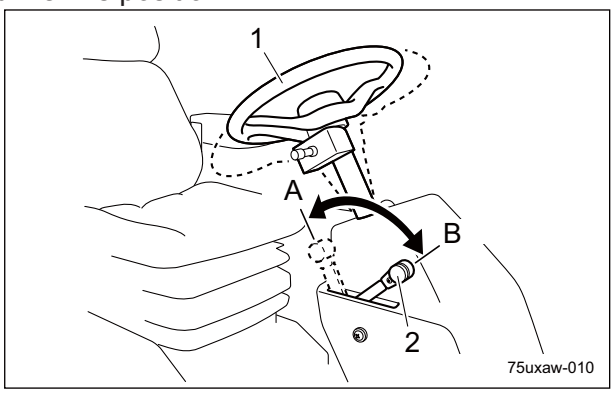

Adjustment of Steering Wheel_001

1	Steering wheel
2	Tilt lever
A	FREE (released)
B	LOCK (locked)

Adjustment of Seat

Use the seat adjustment levers to adjust the seat.
Adjust the position according to the operator's body size.

1. Use the forward/backward adjustment lever to adjust the seat back and forth.
2. Use the backrest tilt adjustment lever to adjust the angle of the backrest.
3. Turn the suspension adjustment handle to adjust the firmness of the seat suspension. Observe the suspension adjustment scale while making adjustments. (50 - 130 kg)
4. Turn the armrest adjustment knob to adjust the angle of the armrests.

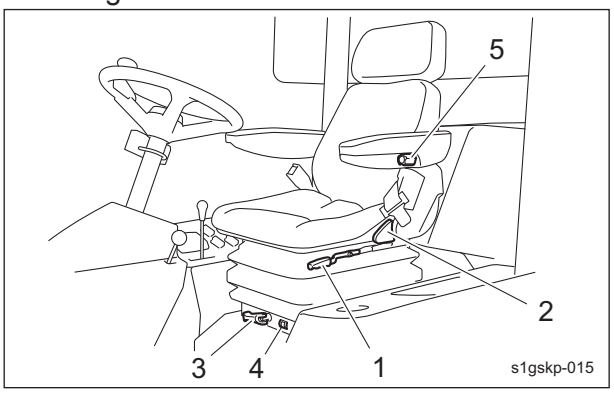

Adjustment of Seat_001

1	Forward/backward adjustment lever
2	Backrest tilt adjustment lever
3	Suspension adjustment handle
4	Suspension adjustment scale
5	Armrest adjustment knob

5. Lift the seat to adjust its height to one of three positions.

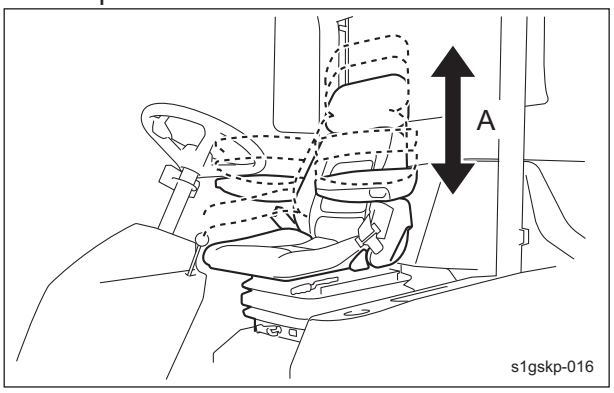

Adjustment of Seat_002

A	Three positions

https://truckmanualshub.com/

Adjustment of Cutting Height

Cutting Height Table

The adjustment range for the cutting height is 20.0 - 91.5 mm.

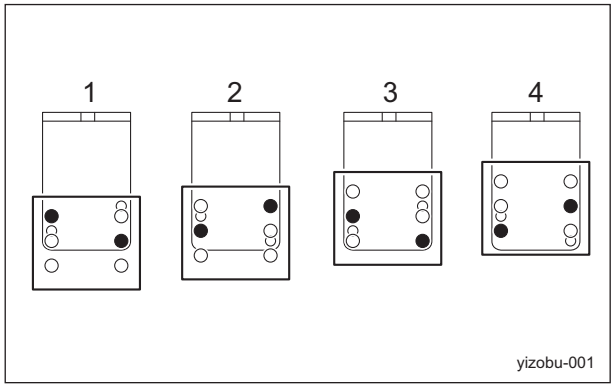

Cutting Height Table_001

1	Adjusting plate position 1
2	Adjusting plate position 2
3	Adjusting plate position 3
4	Adjusting plate position 4

Adjusting Plate Position	1	2	3	4
Adjusting Collars Inserted Under Cutting Height Adjusting Plate (Qty)	Cutting Height (mm)			
0	20.0	30.0	45.5	55.5
1	26.0	36.0	51.5	61.5
2	32.0	42.0	57.5	67.5
3	38.0	48.0	63.5	73.5
4	44.0	54.0	69.5	79.5
5	50.0	60.0	75.5	85.5
6	56.0	66.0	81.5	91.5

Note:
The factory default cutting height is 48 mm.

Adjustment With Adjusting Collars

Adjusting collars are installed at three locations on each mower unit.

Important

The length of grass cut off at any one time must be no more than 30 mm.

Important

Do not cut off more than 1/3 of the grass height.

1. Apply the parking brake, and then lower all mower units.
2. Stop the engine, and then remove the key.
3. Loosen the nuts securing the adjusting collars at the three locations.

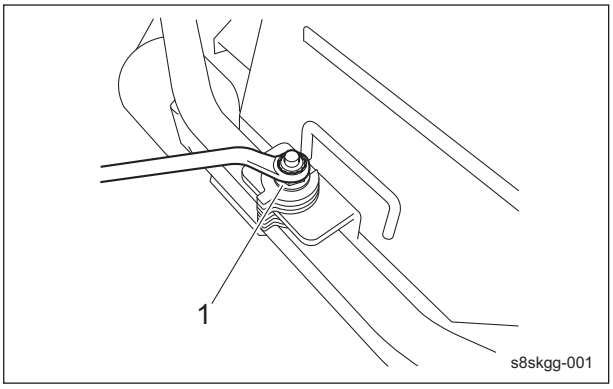

Adjustment With Adjusting Collars_001

1	Nut

4. Refer to the Cutting Height Table, and then adjust the number of adjusting collars at the three locations.
   [1] To increase cutting height:
   Remove an upper adjusting collar and insert it below.
   [2] To decrease cutting height:
   Remove a lower adjusting collar and insert it above.

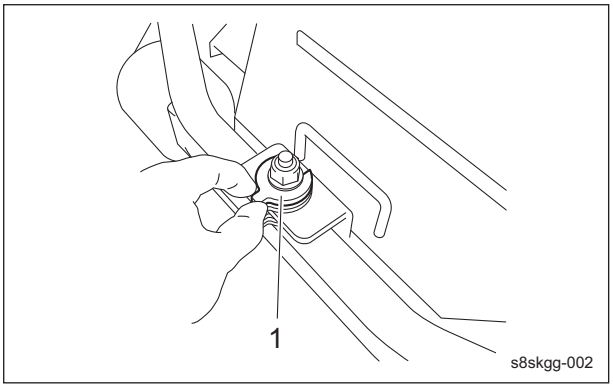

Adjustment With Adjusting Collars_002

https://truckmanualshub.com/

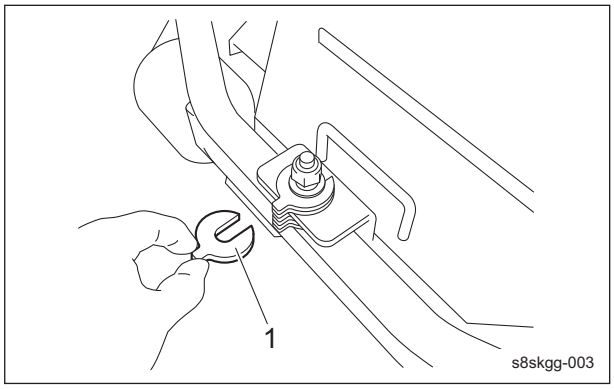

Adjustment With Adjusting Collars_003

1	Adjusting collar

5. After adjusting the adjusting collars at the three locations, firmly tighten all nuts.

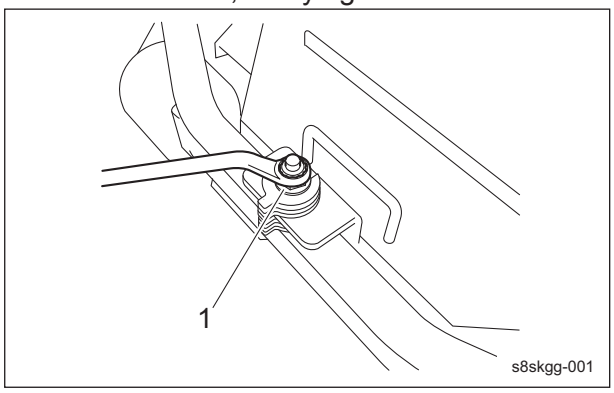

Adjustment With Adjusting Collars_004

1	Nut

Adjustment With Cutting Height Adjusting Plates

Cutting height adjusting plates are installed at three locations on each mower unit.

> **Important**
>
> The length of grass cut off at any one time must be no more than 30 mm.

> **Important**
>
> Do not cut off more than 1/3 of the grass height.

1. Apply the parking brake, and then lower all mower units.
2. Stop the engine, and then remove the key.
3. Loosen the six bolts securing the cutting height adjusting plates at the three locations on the mower unit.

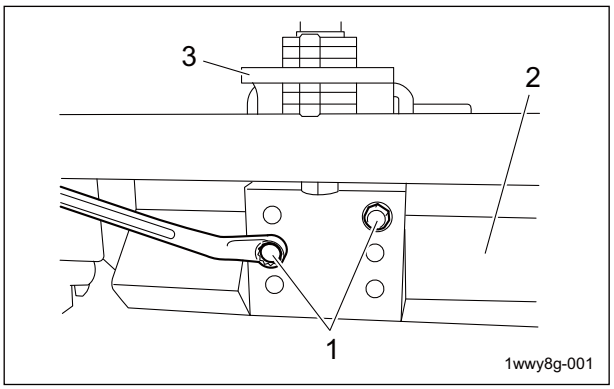

Adjustment With Cutting Height Adjusting Plates_001

1	Bolt
2	Mower unit
3	Cutting height adjusting plate

4. Refer to the Cutting Height Table, and then change the hole positions.
   [1] To increase cutting height:
   a. While lifting the handle at each location on the mower unit, remove the two bolts.
   b. Raise the mower unit to change the hole positions, and then temporarily secure it with the two bolts.
   [2] To decrease cutting height:
   a. While lifting the handle at each location on the mower unit, remove the two bolts.
   b. Lower the mower unit to change the hole positions, and then temporarily secure it with the two bolts.

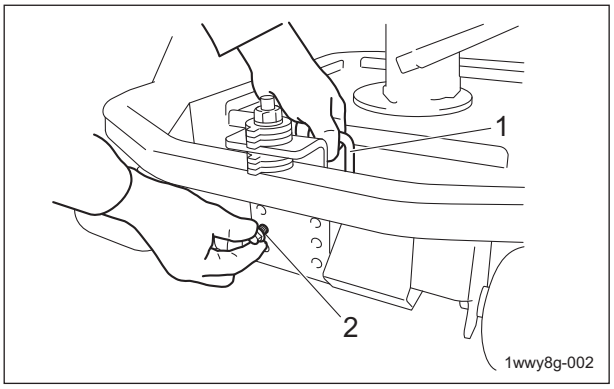

Adjustment With Cutting Height Adjusting Plates_002

1	Handle
2	Bolt

https://truckmanualshub.com/

5. After making adjustments at the three locations, firmly tighten all bolts.

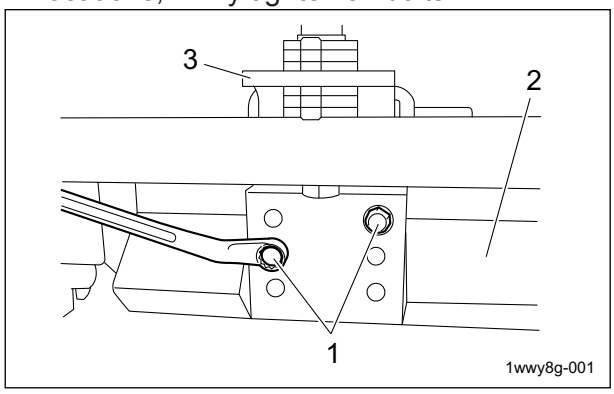

Adjustment With Cutting Height Adjusting Plates_003

1	Bolt
2	Mower unit
3	Cutting height adjusting plate

Procedure to Start / Stop Engine

Start / Stop of Engine

Procedure to Start Engine

Warning

Before starting the engine, make sure that there are no other people or obstacles around the machine.

Caution

When restarting the engine after it has been turned off, wait until the electromagnetic pump has fully stopped before restarting the engine. The electromagnetic pump will stop approximately 7 seconds after the key switch is turned to the "OFF" position.

Important

Starter operation must take 15 seconds or less.
If the engine does not start, stop using the battery for 30 to 60 seconds to avoid exhausting the battery.

1. Sit on the seat.
2. Make sure that the parking brake is applied.
3. Make sure that the knife rotation switch is in the "OFF" position.
4. Make sure that the traveling pedal is in the neutral position.
5. Move the throttle knob halfway from the "Low speed" position toward the "High speed" position.

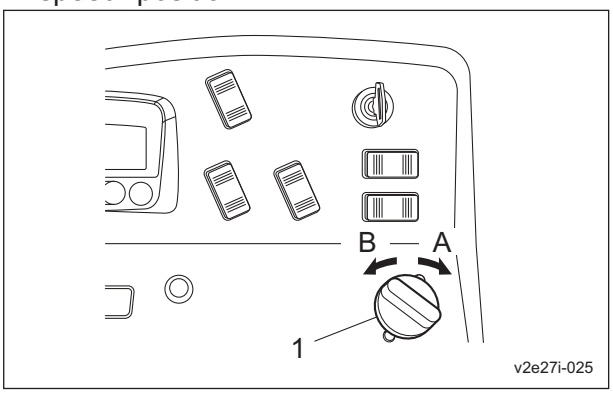

Procedure to Start Engine_001

1	Throttle knob
A	High speed
B	Low speed

6. Switch the ignition key to the "ON (GLOW)" position.

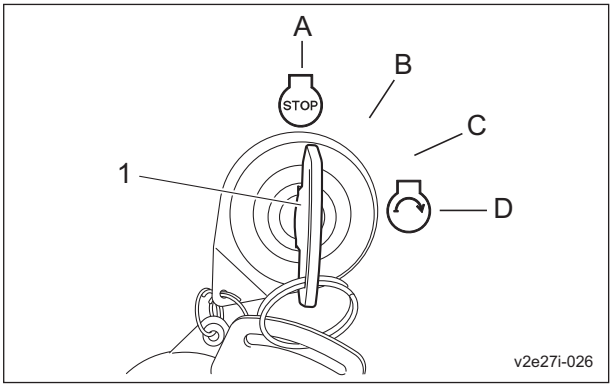

Procedure to Start Engine_002

1	Ignition key
A	OFF
B	ON (GLOW)
C	Unused
D	START

Caution

When the ignition key is switched to the "ON" position, "Warming up" may appear in the monitor display.
Do not start the engine until the message disappears.

7. Make sure that the glow plug is generating heat, the "BARONESS" logo or "Warming up" message appears in the monitor display, and the yellow and red LEDs are lit.

https://truckmanualshub.com/

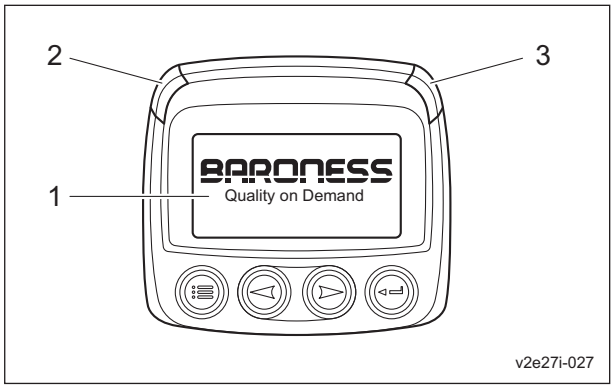

Procedure to Start Engine_003

1	Monitor display
2	Yellow LED
3	Red LED

Caution

Quickly returning the ignition key from the "START" position to the "ON" position may result in damage to the machine.

8. After the "BARONESS" logo and the yellow and red LEDs go off and the parameters (items and values such as the rotation speed) appear, immediately set the ignition key to the "START" position.
9. When the starter starts rotating and the engine starts, slowly return the ignition key to the "ON" position.
10. Move the throttle knob to the "Low speed" position, and then warm up the engine for 1-2 minutes.
11. Gradually move the throttle knob toward the "High speed" position.

Procedure to Stop Engine

1. Set the traveling pedal to the neutral position.
2. Apply the parking brake.
3. Set the knife rotation switch to the "OFF" position.
4. Shift the throttle knob to the "Low speed" position, and then idle the machine for 1-2 minutes.
5. Switch the ignition key to the "OFF" position.
6. Make sure that the engine has stopped.
7. Remove the ignition key.
8. Leave the driver's seat.

Safety Mechanisms

This machine features a safety device for starting/stopping the engine.

1. As for starting the engine, the safety device prevents the engine from starting unless it meets each of the following four conditions.
   - An operator is sitting on the seat.
   - The parking brake is applied.
   - The knife rotation switch is set to the "OFF" position.
   - The traveling pedal is set to the neutral position.
2. In the event the operator leaves the seat with the parking brake applied and the engine running, the safety device will be activated and will stop the engine under any of the following conditions:
   - The traveling pedal is not set to the neutral position. (The operator has depressed the traveling pedal.)
   - The knife rotation switch is set to the "ON" position.

Warning Mechanisms

Caution

When the buzzer (intermittent tone) sounds, be sure to stop operation since the engine is overheated.
Do not stop the engine without idling. Allow the engine to cool down, first. Keep the engine idling for about 5 minutes before stopping.
Remove dust that is jamming in the radiator, air cleaner, and etc.

This machine features warning mechanisms for overheating, the hydraulic oil and the engine.

1. If the engine water temperature exceeds 115 degrees Celsius, a buzzer will sound. (intermittent tone)
2. If the oil level in the hydraulic tank declines from the specified level by approximately 2.0 dm^3 (2.0 L), a buzzer will sound. (continuous tone)
3. With an engine malfunction, a monitor LED lights up and a fault code appears.

https://truckmanualshub.com/

Operation of Each Section

Precautions for Operating the Machine

Caution

Under any circumstances drive the machine at such a speed that you can stop it immediately for emergencies.

Cautions for when You Leave the Machine

Caution

If the brakes are not sufficiently effective, use the wheel stoppers to secure the machine.

Instruction Decals

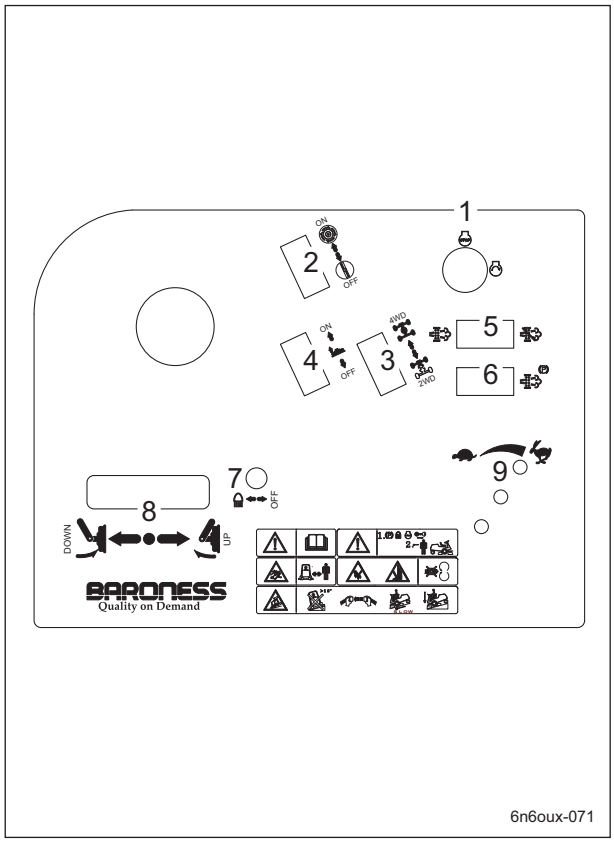

Instruction Decals_001

1	Decal, key switch
2	Decal, knife rotation switch
3	Decal, 2WD/4WD selector switch
4	Decal, traction assist switch
5	Decal, DPF auto regeneration inhibit switch
6	Decal, DPF parked regeneration switch
7	Decal, light switch
8	Decal, mower unit up/down lever
9	Engine speed icons

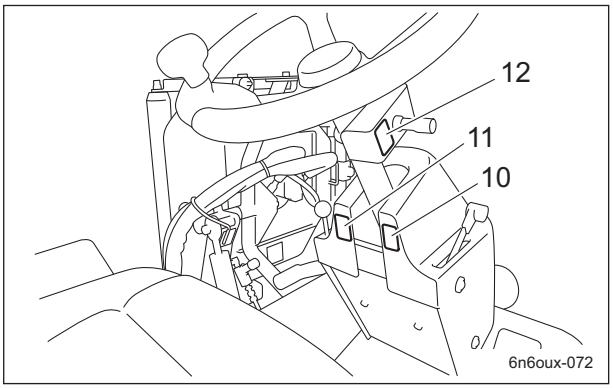

Instruction Decals_002

10	Tilt steering decal
11	Parking brake decal
12	Differential lock decal

https://truckmanualshub.com/

1	Decal, key switch It illustrates the positions of the key switch. 1. OFF 2. ON 3. Unused 4. START	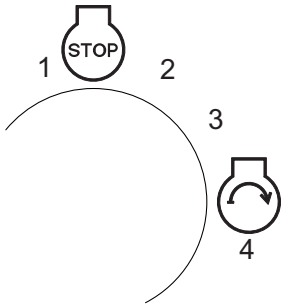 6n6oux-073
2	Decal, knife rotation switch This illustrates rotation/stopping of the rotary knife. 1. Rotate 2. Stop	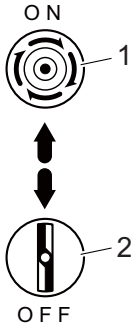 6n6oux-067
3	Decal, 2WD/4WD selector switch This illustrates 2WD/4WD selection. 1. 4WD 2. 2WD	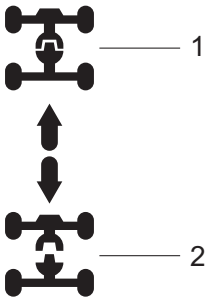 6n6oux-055
4	Decal, traction assist switch This illustrates engaging/releasing of traction assist. 1. Engaged 2. Released	 6n6oux-074
5	Decal, DPF regeneration inhibit switch This indicates the positions of the DPF regeneration inhibit switch. 1. Regenerate 2. Regeneration inhibited	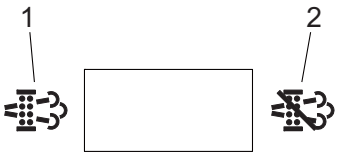 6n6oux-077

https://truckmanualshub.com/

6	Decal, DPF parked regeneration switch This indicates the position of the DPF parked regeneration switch. 1. Engaged	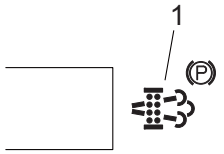 6n6oux-078
7	Decal, light switch It illustrates ON/OFF of the light. 1. ON 2. OFF	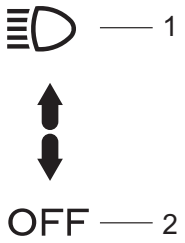 6n6oux-057
8	Decal, mower unit up/down lever These indicate positions for raising and lowering the mower unit. 1. Lowered 2. Raised	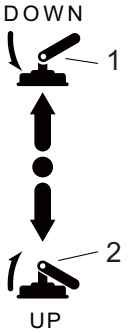 6n6oux-070
9	Engine speed icons These indicate positions for low and high engine speeds. 1. Low speed 2. High speed	 6n6oux-075
10	K4203001350 Tilt steering decal This shows the steering tilt directions and how to lock and release the position.	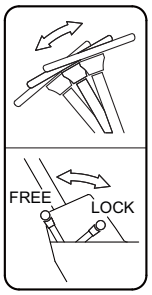 6n6oux-065

https://truckmanualshub.com/

11	K4203001340 Parking brake decal This shows how to lock and release the parking brake. 1. Locked 2. Released	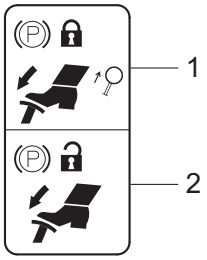 6n6oux-013
12	K4203001420 Decal, differential lock This indicates the positions for engaging or releasing the differential lock. 1. Engaged 2. Released	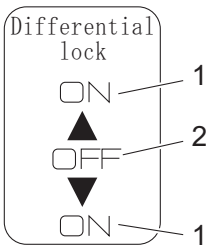 6n6oux-076

https://truckmanualshub.com/

Proximity Sensors

There are two proximity sensors on mower arm fulcrums #4 and #5.
These sensors detect the raised or lowered positions of mower units #4 and #5.
The information is related to controlling rotation and stop of the rotary knives.

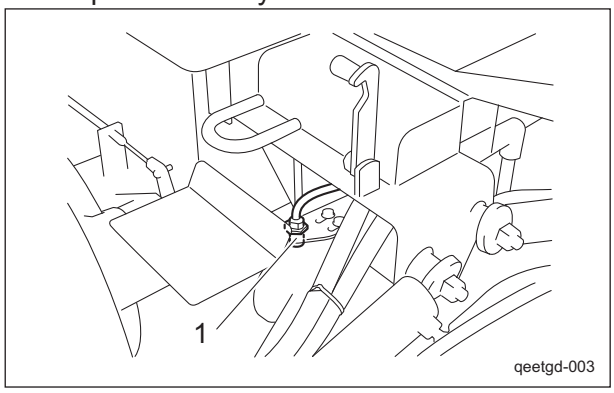

Proximity Sensors_001

1	Proximity sensors

Relays

The relay box is at the front of the right hood.
These relays control operation of the diff-lock valve, rotation of the rotary knives, 2WD/4WD selection and traction assist selection.
The operating condition can be checked by the illumination of the LEDs.

- LEDs ①, ② and ③ light up when the diff-lock valve is in the "ON" position.
- LED ④ lights up when the traction assist switch is in the "ON" position.
- LEDs ⑤ and ⑥ light up when the knife rotation switch is in the "ON" position and the mower deck is lowered.
- LED ⑦ lights up when the knife rotation switch is in the "ON" position, and then the machine enters 4WD.
- LED ⑧ lights up when the 2WD/4WD selector switch is in the "4WD" position, and then the machine enters 4WD.

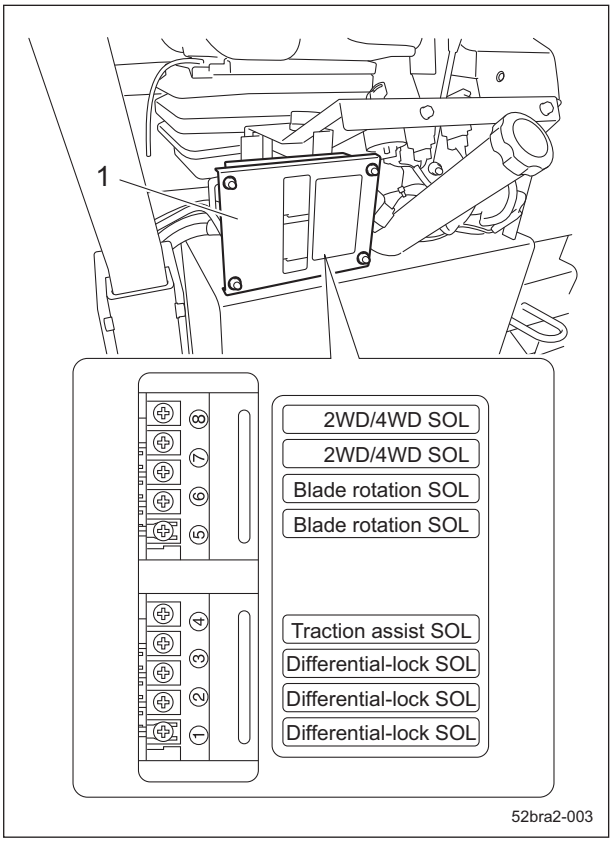

Relays_001

1	Relay box

Knife Rotation Switch

⚠ Caution

Before you start cutting work, set the knife rotation switch to the "ON" position. At all other times, make sure it is set to the "OFF" position.

The knife rotation switch is located in the operation panel and controls the rotation of the rotary knives.
When the knife rotation switch is set to the "ON" position, the rotary knife in all mower units rotates. When the knife rotation switch is set to the "OFF" position, the rotary knives stop.
When the mower units are raised, the rotary knives do not rotate, even if the switch is set to the "ON" position.

https://truckmanualshub.com/

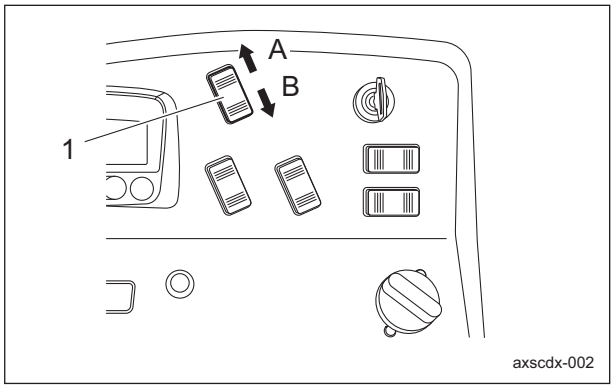

Knife Rotation Switch_001

1	Knife rotation switch
A	ON
B	OFF

Note:
When the knife rotation switch is set to the "ON" position, the machine enters 4WD, regardless of the position that the 2WD/4WD selector switch is set to.

2WD/4WD Selector Switch

Caution

When working on a slope, be sure to use the machine in 4WD.

The 2WD/4WD selector switch is located in the operation panel.
When the switch is set to the "2WD" position, the machine will be in two-wheel drive (front-wheel drive). When it is set to the "4WD" position, the machine will be in four-wheel drive.

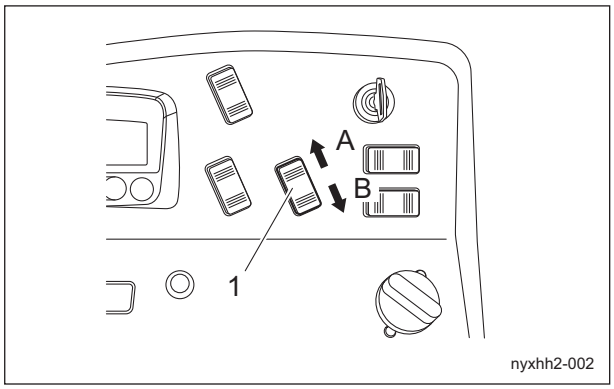

2WD/4WD Selector Switch_001

1	2WD/4WD selector switch
A	4WD
B	2WD

Note:
When the knife rotation switch is set to the "ON" position, the machine enters 4WD, regardless of the position that the 2WD/4WD selector switch is set to.

DPF Auto Regeneration Inhibit Switch

Caution

Normally, set the DPF auto regeneration inhibit switch to the "Auto regeneration" position.
However, when operating in a location where fires may occur, set the DPF auto regeneration inhibit switch to the "Auto regeneration inhibit" position.

The DPF auto regeneration inhibit switch is located in the operation panel.
When the switch is set to the "Auto regeneration" position, auto regeneration is performed. When the switch is set to the "Auto regeneration inhibit" position, auto regeneration is inhibited.

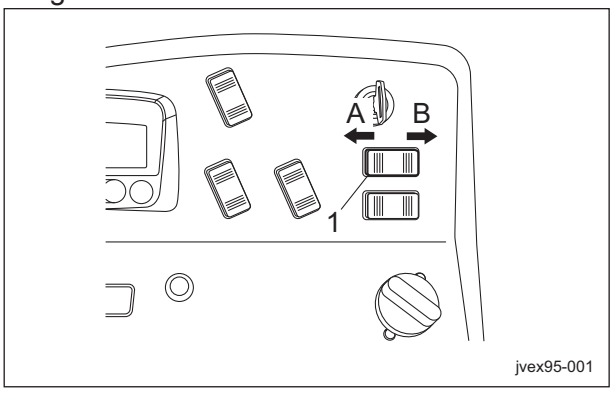

DPF Auto Regeneration Inhibit Switch_001

1	DPF auto regeneration inhibit switch
A	Auto regeneration
B	Auto regeneration inhibit

https://truckmanualshub.com/

When the switch is set to the "Auto regeneration inhibit" position, the auto regeneration inhibit icon appears in the monitor display.

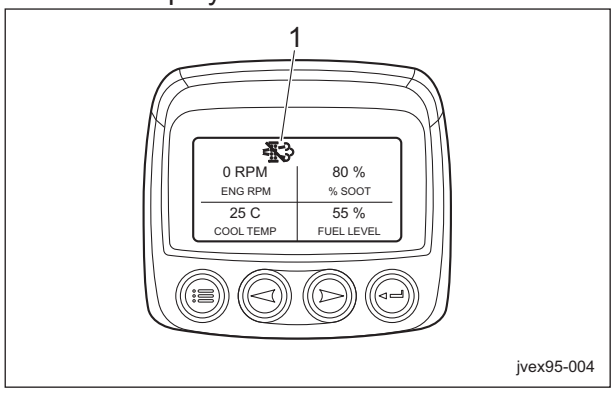

DPF Auto Regeneration Inhibit Switch_002

1	Auto regeneration inhibit icon

DPF Parked Regeneration Switch

Danger

Since it will become extremely hot around the exhaust outlet, do not perform DPF regeneration in a location where fires may occur.

Important

If parked regeneration is not needed, it will not start, even if the switch is pressed.

The DPF parked regeneration switch is located in the operation panel.

When the regeneration icon is blinking, set the switch to the "Engaged" position to start parked regeneration.

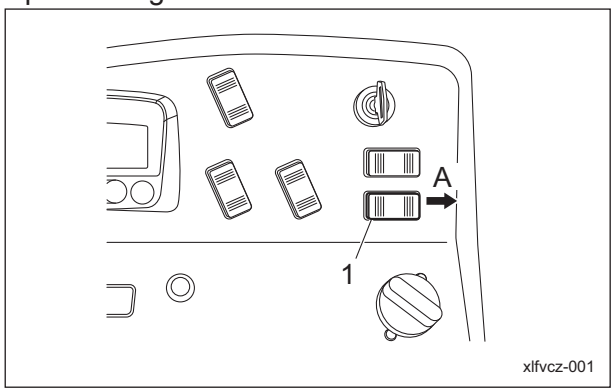

DPF Parked Regeneration Switch_001

1	DPF parked regeneration switch
A	Engaged

When parked regeneration starts, the regeneration icon in the monitor display changes from blinking to lighting.

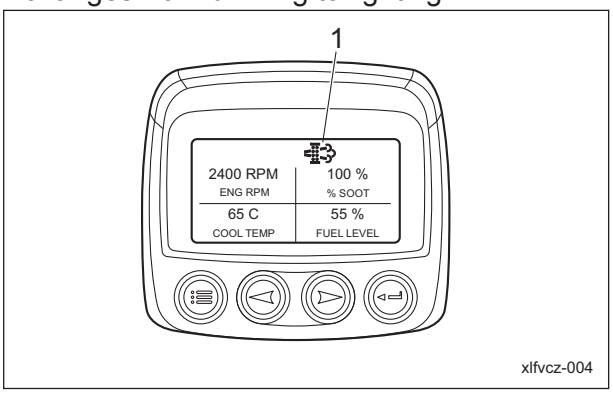

DPF Parked Regeneration Switch_002

1	Regeneration icon

Light Switch

Warning

The lights provide auxiliary lighting.
Do not travel or operate the machine at night or under poor visibility.

The light switch is located in the operation panel.
When the switch is set to the "ON" position, the lights turn on. When it is set to the "OFF" position, the lights turn off.

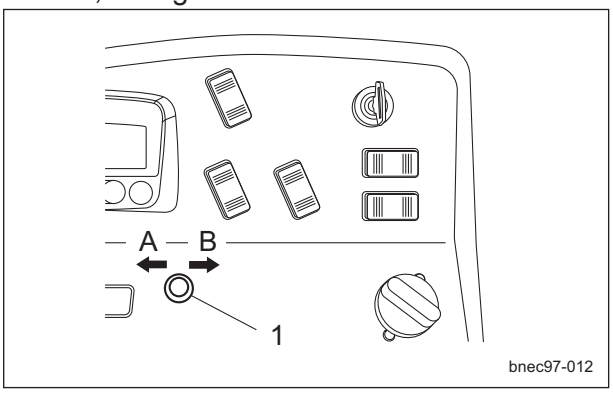

Light Switch_001

1	Light switch
A	ON
B	OFF

https://truckmanualshub.com/

Traction Assist Switch

The traction assist switch is located in the operation panel.
Under the following conditions with the switch set to the “ON” position, the mode is automatically switched so that the power lifting the mower units and climbing ability are increased.

- 4WD operation
- Slope of about 13 degrees

Important

The cylinders are pressurized even with the switch set to the “OFF” position and so the mower units are a little raised.

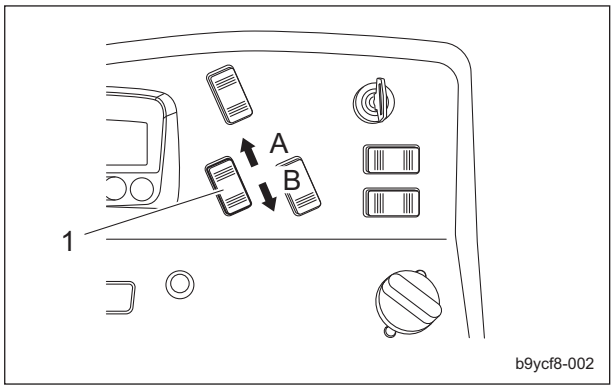

Traction Assist Switch_001

1	Traction assist switch
A	ON
B	OFF

Note:
Tracking may be impaired if the machine is used with the switch set to the "ON" position in an area with many undulations.

Mower Lock Lever (Latch)

The mower lock levers (latches) are located in the foot area on the left and right sides and are used when traveling or storing the machine with mower units #4 and #5 raised.
When storing the machine, hook the mower lock levers (latches) on the arms.

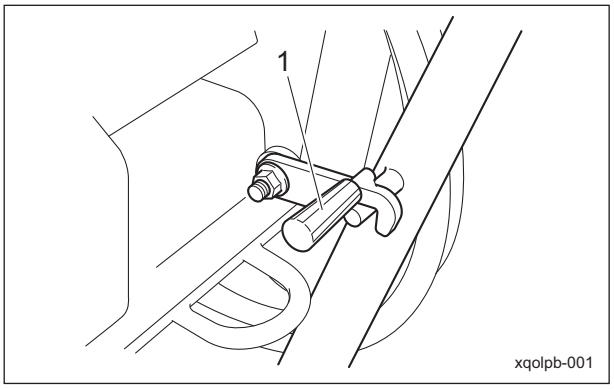

Mower Lock Lever (Latch)_001

1	Mower lock lever (latch)

Mower Unit Up/Down Lever

Caution

Before raising or lowering the mower units, make sure that there are no people around the machine.

Caution

When the mower lock levers (latches) are engaged, do not operate the mower unit up/down lever.

The mower unit up/down lever is located in the operation panel and raises or lowers the mower units.
When the lever is shifted to the "DOWN" position, the mower units are lowered. When the lever is shifted to the "UP" position, the mower units are raised.
Release the lever to return it to the neutral position.

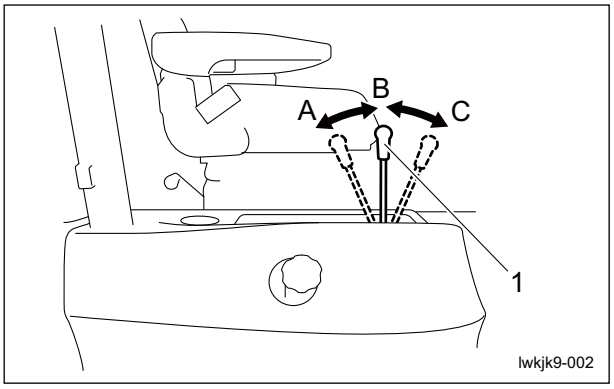

Mower Unit Up/Down Lever_001

1	Mower unit up/down lever
A	UP
B	Neutral
C	DOWN

https://truckmanualshub.com/

Note:
When the mower units are raised, the knives stop rotating, even if the knife rotation switch is set to the "ON" position.

Throttle Knob

The throttle knob is located to the right of the driver's seat and enables you to adjust the engine rpm.
Move the throttle knob toward the "High speed" position to increase the engine rpm, and toward the "Low speed" to reduce the rpm.
Note:
The factory default engine rpm (maximum) is set to 2,600 rpm.

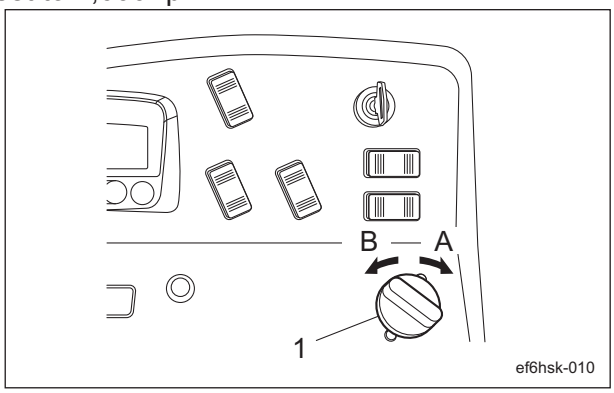

Throttle Knob_001

1	Throttle knob
A	High speed
B	Low speed

Diff-Lock Switch

Caution

Do not operate the diff-lock switch unless it is necessary.
It may result in the hydraulic system malfunction.

The diff-lock switch is located below the right side of the steering wheel and engages the differential lock for the left and right front wheels.
Tilt the switch lever up or down to turn "ON" to engage the differential lock for the front wheels.
Release the switch lever to return it to the neutral position ("OFF" position) and disengage the differential lock.

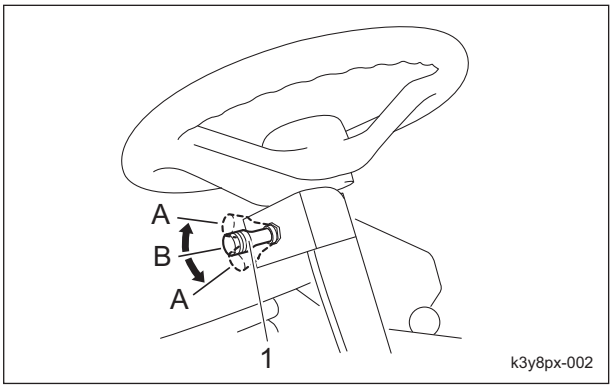

Diff-Lock Switch_001

1	Diff-lock switch
A	ON
B	OFF

Traveling Pedal

Caution

When the machine is traveling at a high speed, it will not stop immediately after you take your foot off the traveling pedal.
If necessary, also use the brake.

The traveling pedals are located in the right foot area and control forward and reverse operation of the machine.
When the forward pedal (inside) is depressed, the machine travels forward. When the reverse pedal (outside) is depressed, the machine travels in reverse.
The speed changes in accordance with how much the pedal is depressed.
When you take your foot off the pedal, the machine stops automatically.

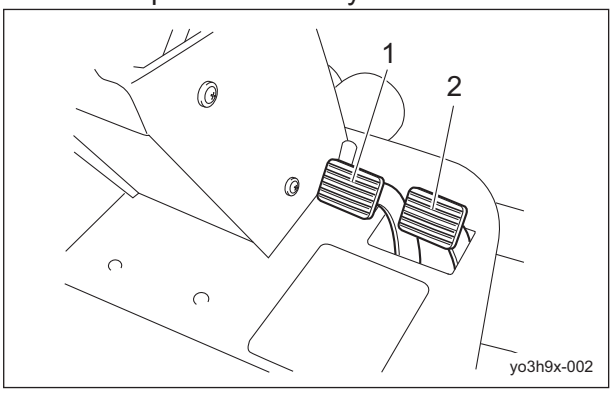

Traveling Pedal_001

1	Forward pedal
2	Reverse pedal

https://truckmanualshub.com/

Brake Pedal

Warning

Link the brake pedals, except when operating the machine.
Using the brake pedals without linking them may result in the machine overturning.

Warning

When depressing the brake pedals to make turns with a small radius, obtain a sufficient awareness of the lawn and ground conditions. This may damage the lawn.

The brake pedals are located in the left foot area and operate the left and right brakes independently.
By depressing the brake pedal on the side in which the turn will be made, the machine can make turns with a small radius.
If the front wheel on the upward side of a slope slips, depress the brake pedal for the wheel on the upward side in order to increase the traction of the wheel on the downward side and stabilize travel.

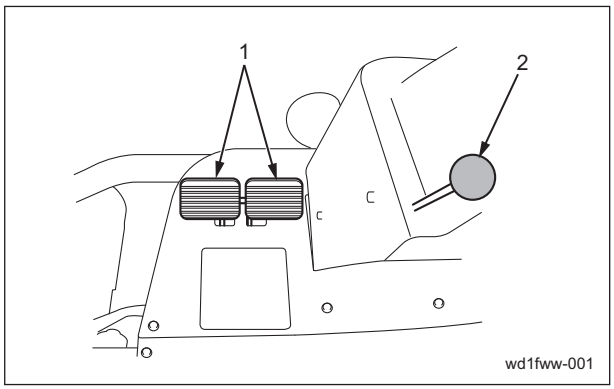

Brake Pedal_001

1	Brake pedals
2	Parking brake lever

Change of Braking Method

Follow the procedure below to change the braking method from linked to independent.

1. Swing up the pedal link bar, and then pull it out from the right brake pedal.

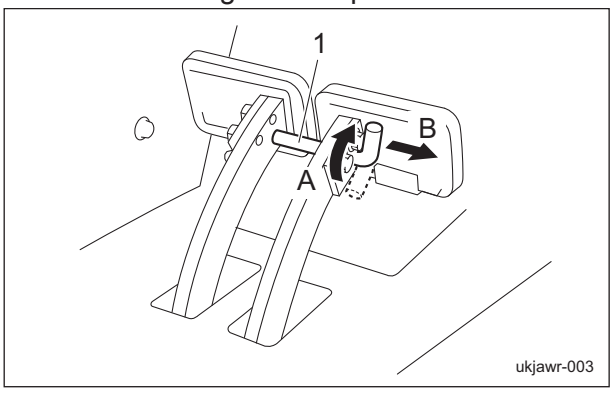

Change of Braking Method_001

1	Pedal link bar
A	Swing up
B	Pull out

2. Secure the pedal link bar in the holder on the left brake pedal.

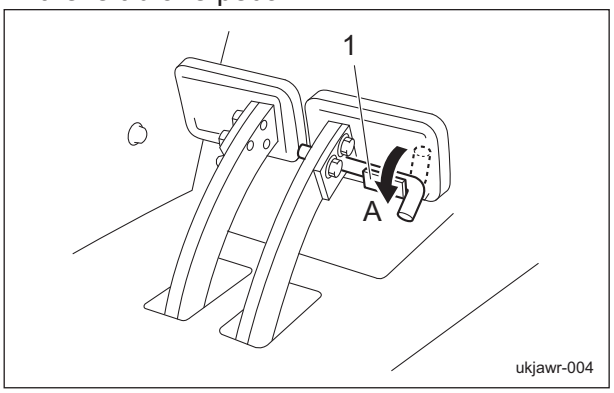

Change of Braking Method_002

1	Holder
A	Secure

https://truckmanualshub.com/

Parking Brake Lever

Caution

Be sure to release the parking brake before driving.
It may result in the brakes or hydraulic system malfunction.

Caution

Never park the machine on a slope.

The parking brake lever is located to the left of the front cover.
When parking, link the left and right brake pedals by using the pedal link bar, depress both brake pedals, and then pull the parking brake lever completely.
To release the parking brake, depress the brake pedals.

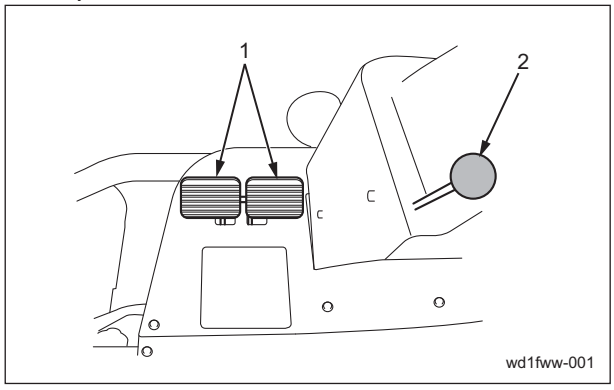

Parking Brake Lever_001

1	Brake pedals
2	Parking brake lever

Hood

Caution

Do not open the hood in strong winds.

Caution

Be careful not to pinch your fingers when you open or close the hood.

1. Unlock the rubber catch, and then lift up the hood.
2. Hook the hood support rod onto the latch inside the hood.
   Make sure that the hood will not close, and then remove your hands.

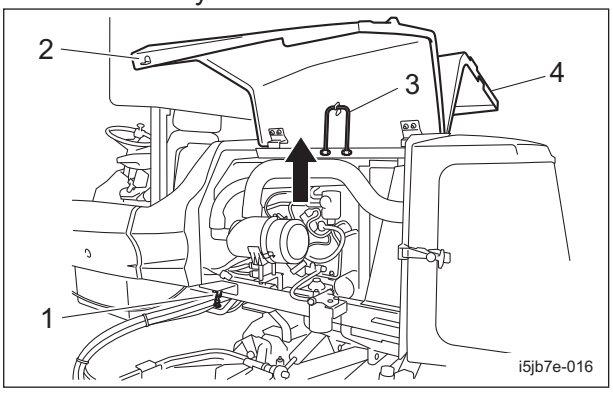

Hood_001

1	Rubber catch
2	Left hood
3	Hood support rod
4	Right hood

3. To close the hood, release the hood support rod from the latch, and then lower the hood slowly.
4. Lock the rubber catch securely.

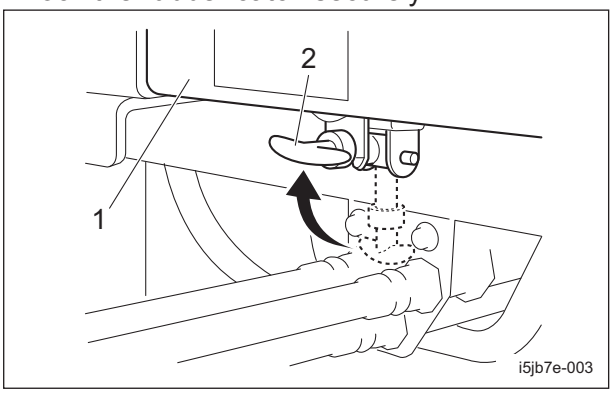

Hood_002

1	Hood
2	Rubber catch

Underseat Cover

Caution

Be careful not to pinch your fingers when you open or close the underseat cover.

1. Make sure that the steering wheel is raised completely.
2. Bring the seat to the backmost position.

https://truckmanualshub.com/

3. Pull up the lever behind the seat to unlock it.

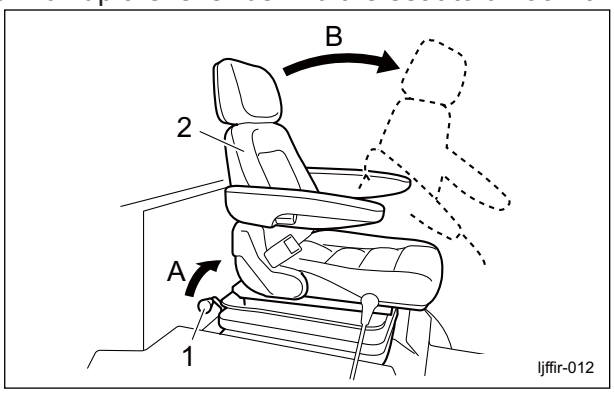

Underseat Cover_001

1	Lever
2	Seat
A	Pull up
B	Tilt forward

4. Tilt the seat forward to open the cover.
   To close the cover, slowly lower the seat.

Instruments

Description of Monitor

The monitor displays various information about the machine, such as the operating status and fault conditions.
The information of desired items can be confirmed according to operating the keys.

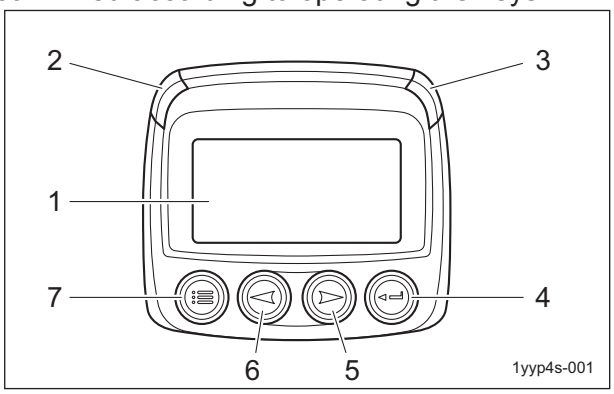

Description of Monitor_001

1	Monitor display
2	LED (yellow)
3	LED (red)
4	Enter key
5	Right arrow key
6	Left arrow key
7	Menu key

1. Monitor display
   Displays machine conditions and items.
2. LED (yellow)
   Lights up when a malfunction is detected, warning not to decrease or stop output.
3. LED (red)
   Lights up when a decreased/stopped output malfunction is detected.
4. Enter key
   Selects the menu or parameter.
   Switches between displaying/hiding the current fault code.
5. Right arrow key
   Scrolls the screen.
   Move the parameter selection to the right or down.
6. Left arrow key
   Scrolls the screen.
   Move the parameter selection to the left or up.
7. Menu key
   Opens or exits the menu.

Main Menu Items

While any parameter is displayed, press the menu key to display the main menu with the following 11 items.

- GO TO 1-UP DISPLAY / GO TO 4-UP DISPLAY
- LANGUAGES
- STORED CODES
- ENGINE CONFIGURATION
- SETUP 1-UP DISPLAY
- SETUP 4-UP DISPLAY
- SERVICE REMINDERS
- SELECT UNITS
- ADJUST BACKLIGHT
- ADJUST CONTRAST
- UTILITIES

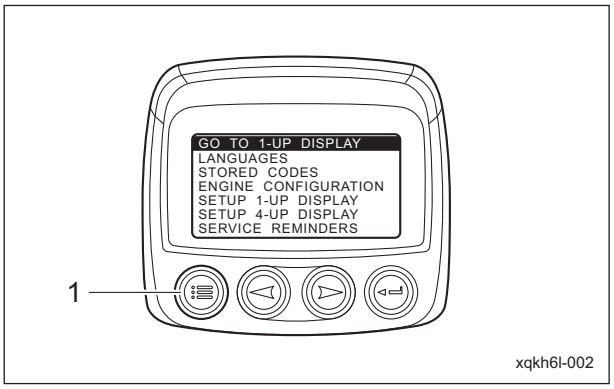

Main Menu Items_001

1	Menu key

https://truckmanualshub.com/

1-Up Display / 4-Up Display

"GO TO 1-UP DISPLAY" / "GO TO 4-UP DISPLAY" are used to set whether to display parameters individually in a screen or in groups of four per screen.

1. 1-up display
   One parameter is displayed individually in the monitor display.

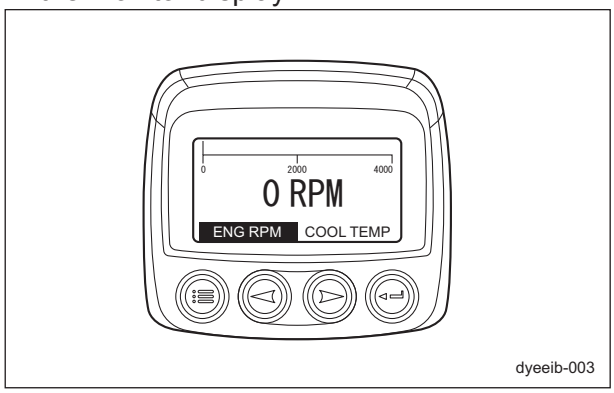

1-Up Display / 4-Up Display_001

2. 4-up display
   Four parameters are displayed in the monitor display.
   With the 4-up display, a total of 8 parameters are displayed over 2 pages.

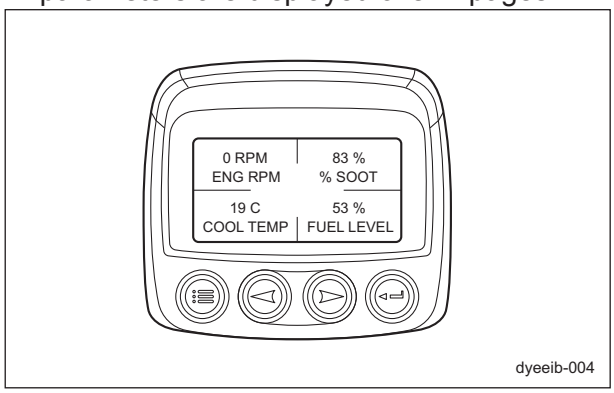

1-Up Display / 4-Up Display_002

Note:
The factory default display is the 4-up display.
"GO TO 1-UP DISPLAY" appears in the main menu.
When the 1-up display is set, "GO TO 4-UP DISPLAY" appears in the main menu.

https://truckmanualshub.com/

■Parameter Items

The parameters and corresponding information that appear in the monitor display are listed below.

No.	Monitor display L	Monitor display S	Description
1	ENGINE SPEED	ENG RPM	Displays the engine rpm.
2	DRIVERS DEMAND ENGINE TORQUE	DEMAND TQ	Displays the torque required by the ECU.
3	ACTUAL ENGINE TORQUE	ENG TORQ	Displays the actual torque.
4	PERCENT LOAD AT CURRENT RPM	LOAD@RPM	Displays the engine load factor.
5	ACCELERATOR PEDAL POSITION 1	ACCEL PED1	Displays the accelerator sensor opening.
6	ENGINE DESIRED OP SPEED	DES ENG SP	Displays the engine rpm required by the ECU.
7	ENGINE COOLANT TEMPERATURE	COOL TEMP	Displays the temperature measured by the coolant temperature sensor.
8	FUEL RATE	FUEL RATE	Displays the engine fuel consumption rate.
9	THROTTLE POSITION	THROTTLE	Displays the engine throttle opening.
10	BOOST PRESSURE	BST PRES	Displays the pressure measured by the intake pressure sensor.
11	INTAKE MANIFOLD TEMPERATURE	MANI TEMP	Displays the temperature measured by the intake temperature sensor built into the air flow sensor.
12	BATTERY POTENTIAL	BAT VOLT	Displays the battery voltage.
13	BAROMETRIC PRESSURE	BARO PRES	Displays the atmospheric pressure measured by the atmospheric pressure sensor.
14	AMBIENT AIR TEMP	AMB TEMP	Displays the ambient temperature.
15	AIR INLET TEMPERATURE	AIR IN TP	Displays the intake air temperature measured by the air flow sensor.
16	TOTAL FUEL USED	FUEL USED	Displays the total fuel consumption of the engine.
17	TOTAL ENGINE HOURS	ENG HRS	Displays the total time that the ECU is on (time that the key is in the "ON" position).
18	ENGINE OIL PRESSURE	OIL PRES	Displays the engine oil pressure measured by the oil pressure switch. While the engine is running: Normal=200 kPa, Abnormal=0 kPa
19	INJECTOR METERRING RAIL PRESS	RAIL PRES	Displays the fuel pressure in the rail, measured by the rail pressure sensor.
20	ENGINE INLET AIR MASS FLOW RATE	AIR RATE	Displays the intake air volume measured by the air flow sensor.
21	DOC INTAKE GAS TEMP	DOC TEMP	Displays the DOC inlet gas temperature measured by the exhaust temperature sensor.
22	EXHAUST FILTER INLET TEMP	EF IN T	Displays the DPF inlet gas temperature measured by the exhaust temperature sensor.
23	DPF DIFFERENCE PRESSURE	DIFF PRES	Displays the pressure difference before and after the DPF, measured by the differential pressure sensor.

https://truckmanualshub.com/

No.	Monitor display L	Monitor display S	Description
24	EXHAUST FILTER OUTLET TEMP	EF OUT T	Displays the DPF outlet gas temperature measured by the exhaust temperature sensor.
25	PARTICUATE TRAP LAMP	PT LAMP	Shows the status of the regeneration icon. Icon not displayed="OFF", Icon blinking="ON BLINK", Icon solid="ON SOLID"
26	DPF STATUS	DPF ST	Shows the status of the DPF. DPF regeneration not needed="REGEN NOT NEEDED" DPF regeneration needed=(Level 1="NEEDED LOWEST", Level 2-3="NEEDED MODERATE", Level 4="NEEDED HIGHEST")
27	DPF ACTIVE REGEN STATUS	DPF AR ST	Shows the DPF regeneration status. Regeneration not needed="INACTIVE", Regeneration needed="NEEDED", Regenerating="ACTIVE"
28	DPF REGEN INHIBIT STATUS	INHIBIT ST	Shows the ECU auto regeneration inhibited status. Auto regeneration inhibit switch off="OFF", Auto regeneration inhibit switch on="ON"
29	DPF REGENERATION INHIBITED SW	DPF INHIB SW	Shows the status of auto regeneration inhibit switch. Auto regeneration inhibit switch off="OFF", Auto regeneration inhibit switch on="ON"
30	EXHAUST HIGH TEMP LAMP	EXH T LAMP	Displays the condition of the exhaust temperature. 450 °C or more="ON", 450 °C or less="OFF"
31	%SOOT	%SOOT	Displays the amount of soot accumulated in the DPF.
32	MACHINE HOURS	MACH HRS	Displays the total operating time of the machine (time that the engine was actually running).
33	FUEL LEVEL	FUEL LEVEL	Displays the quantity of fuel remaining in the fuel tank.

Note:
When display settings are being specified, the parameters appear on "Monitor display L".
At all other times, the parameters appear on "Monitor display S".

https://truckmanualshub.com/

Language

With "LANGUAGES", the language used in the monitor display can be set to either of the following two.

・ENGLISH

・JAPANESE

An asterisk appears at the right of the currently selected language.

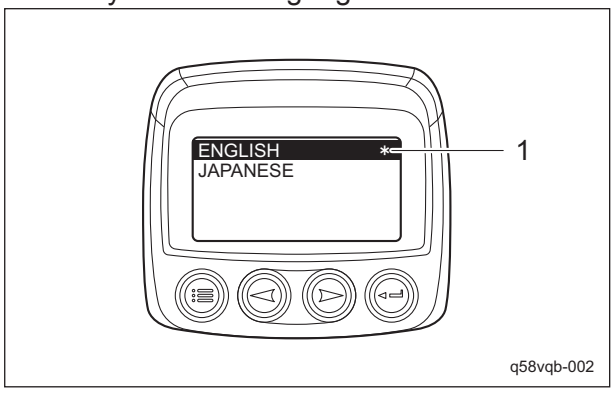

Language_001

1	Asterisk

Note:
The factory default language is "ENGLISH".

Fault Code Log

With "STORED CODES", a log of past fault codes can be checked.
When there is a fault code log, each fault is displayed over two pages.
Use the arrow keys to change the page.

・Text 1

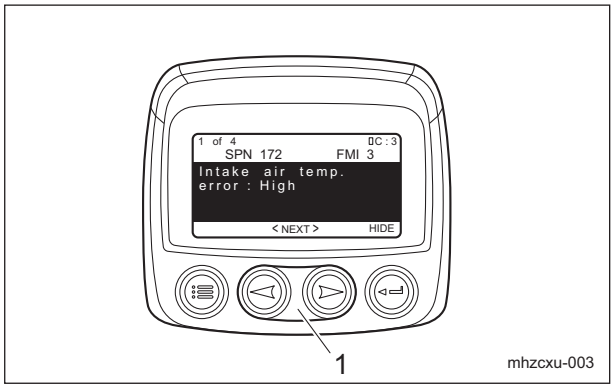

Fault Code Log_001

1	Arrow keys

・Text 2

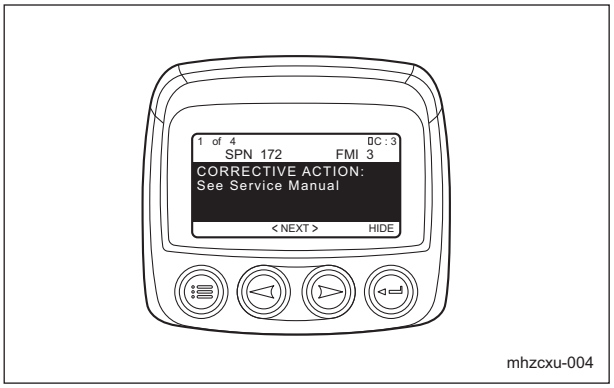

Fault Code Log_002

If there is no fault code log, "NO STORED FAULT CODES" appears.

https://truckmanualshub.com/

Handling Instructions

■List of Fault Codes

Caution

When the fault code appears in the monitor display, refer to "Kubota DIAGNOSIS MANUAL COMMON RAIL SYSTEM" or contact your dealer.

The fault codes (DTC) and corresponding information that appear in the monitor display are listed below.

No.	DTC name Text 1	Corrective action Text 2	ISO 14229 P-Code	J1939-73		Detection item	Behavior during malfunction	DTC recovery from error
				SPN	FMI			
1	NE-G phase shift	See Service Manual	P0016	636	7	Large phase shift between NE pulse and G pulse	(Invalid G signal) Slow starting	Diagnostic counter=0
2	Pressure limiter emergency open	See Service Manual	P0087	633	7	Abnormal opening of pressure limiter valve	Insufficient output Deterioration of emission performance	Key switch to "OFF"
3	High rail pressure	See Service Manual	P0088	157	0	Actual pressure exceeds the command pressure (when a high pressure exceeding the operating pressure range is detected)	Insufficient output Deterioration of emission performance	Key switch to "OFF"
4	SCV (MPROP) Stuck	See Service Manual	P0089	1347	7	SCV stuck open (when the actual rail pressure is detected to always exceed the command rail pressure)	Insufficient output Deterioration of emission performance * Engine stopped	Key switch to "OFF"
5	Fuel Leak (in High Pressured Fuel System)	Stop ENG, See Service Manual	P0093	1239	1	Fuel leakage from high-pressure fuel system (when excessive fuel consumption is detected by calculating the difference in the rail pressure before and after fuel injection)	Insufficient output Deterioration of emission performance * Engine stopped	Key switch to "OFF"
6	Intake air temp. error：Low	See Service Manual	P0112	172	4	Ground short circuit of sensor/harness	Increase in white smoke at low temperatures	Diagnostic counter=0
7	Intake air temp. error：High	See Service Manual	P0113	172	3	Circuit interruption or +B short circuit of sensor/harness	Increase in white smoke at low temperatures	Diagnostic counter=0

https://truckmanualshub.com/

No.	DTC name Text 1	Corrective action Text 2	ISO 14229 P-Code	J1939-73 SPN	 FMI	Detection item	Behavior during malfunction	DTC recovery from error
8	Coolant Temperature Sensor Abnormality : Low	See Service Manual	P0117	110	4	Ground short circuit of sensor/harness	Increase in white smoke at low temperatures Insufficient output Deterioration of emission performance	Key switch to "OFF"
9	Coolant Temperature Sensor Abnormality : High	See Service Manual	P0118	110	3	Circuit interruption or +B short circuit of sensor/harness	Increase in white smoke at low temperatures Insufficient output Deterioration of emission performance	Key switch to "OFF"
10	Rail Pressure Sensor Abnormality : Low	Stop ENG, See Service Manual	P0192	157	4	Ground short circuit of sensor/harness Sensor malfunction	Insufficient output Deterioration of emission performance Increase in noise Increase in white smoke Engine stops	Key switch to "OFF"
11	Rail Pressure Sensor Abnormality : High	Stop ENG, See Service Manual	P0193	157	3	Circuit interruption or +B short circuit of sensor/harness Sensor malfunction	Insufficient output Deterioration of emission performance Increase in noise Increase in white smoke Engine stops	Key switch to "OFF"
12	Injector Charge Voltage Abnormality : High	Stop ENG, See Service Manual	P0200	523535	0	Excessive injector charge voltage ECU charge circuit malfunction	Insufficient output Deterioration of emission performance Engine stops	Key switch to "OFF"
13	Open circuit of harness/coil in 1st cylinder injector	See Service Manual	P0201	651	3	Circuit interruption of harness Circuit interruption of injector coil	Insufficient output Increase in vibrations Deterioration of emission performance	Key switch to "OFF"
14	Open circuit of harness/coil in 3rd cylinder injector	See Service Manual	P0202	653	3	Circuit interruption of harness Circuit interruption of injector coil	Insufficient output Increase in vibrations Deterioration of emission performance	Key switch to "OFF"

https://truckmanualshub.com/

No.	DTC name Text 1	Corrective action Text 2	ISO 14229 P-Code	J1939-73		Detection item	Behavior during malfunction	DTC recovery from error
				SPN	FMI			
15	Open circuit of harness/coil in 4th cylinder injector	See Service Manual	P0203	654	3	Circuit interruption of harness Circuit interruption of injector coil	Insufficient output Increase in vibrations Deterioration of emission performance	Key switch to "OFF"
16	Open circuit of harness/coil in 2nd cylinder injector	See Service Manual	P0204	652	3	Circuit interruption of harness Circuit interruption of injector coil	Insufficient output Increase in vibrations Deterioration of emission performance	Key switch to "OFF"
17	Engine overheat	Stop mowing!!	P0217	110	0	Abnormally high temperature of engine coolant	Insufficient output Overheating	Diagnostic counter=0
18	Engine overrun	See Service Manual	P0219	190	0	Engine rpm exceeds specified value	Overrunning	Diagnostic counter=0
19	Boost Pressure Sensor Abnormality: Low	See Service Manual	P0237	102	4	Ground short circuit of sensor/harness Sensor malfunction	Insufficient output	Key switch to "OFF"
20	Boost Pressure Sensor Abnormality: High	See Service Manual	P0238	102	3	Circuit interruption or +B short circuit of sensor/harness Sensor malfunction	Insufficient output	Key switch to "OFF"
21	No input of NE sensor pulse	See Service Manual	P0335	636	8	Circuit interruption or short circuit of sensor/ harness Sensor malfunction	(Running only with G) Poor starting Slight increase in vibrations Insufficient output	Key switch to "OFF"
22	NE sensor pulse number error	See Service Manual	P0336	636	2	Circuit interruption or short circuit of sensor/ harness Sensor malfunction	(Running only with G) Poor starting Slight increase in vibrations Insufficient output	Key switch to "OFF"
23	No input of G sensor pulse	See Service Manual	P0340	723	8	Circuit interruption or short circuit of sensor/ harness Sensor malfunction	(Invalid G signal) Slow starting	Diagnostic counter=0
24	G sensor pulse number error	See Service Manual	P0341	723	2	Circuit interruption or short circuit of sensor/ harness Sensor malfunction	(Invalid G signal) Slow starting	Diagnostic counter=0

https://truckmanualshub.com/

No.	DTC name Text 1	Corrective action Text 2	ISO 14229 P-Code	J1939-73 SPN	 FMI	Detection item	Behavior during malfunction	DTC recovery from error
25	Open circuit of glow relay driving circuit	See Service Manual	P0380	676	5	Interruption of glow drive circuit	(At low temperatures) Poor starting Increase in white smoke	Key switch to "OFF"
26	+B short of glow relay driving circuit	See Service Manual	P0380	523544	3	+B short circuit in glow drive circuit	(At low temperatures) Poor starting Increase in white smoke	Key switch to "OFF"
27	Ground short of glow relay driving circuit	See Service Manual	P0380	523544	4	GND short circuit in glow drive circuit	(At low temperatures) Poor starting Increase in white smoke	Key switch to "OFF"
28	Glow Heater Relay Driving Circuit Overheat	See Service Manual	P0381	676	0	Abnormally high temperature of glow drive circuit	(At low temperatures) Poor starting Increase in white smoke	Key switch to "OFF"
29	Oil pressure error	Stop ENG, See Service Manual	P0524	100	1	Oil pressure drop switch activated	Engine stops	Key switch to "OFF"
30	Battery Voltage Abnormality: Low	Stop ENG, See Service Manual	P0562	168	4	Circuit interruption, short circuit or damage of harness Battery malfunction	Poor starting Insufficient output Deterioration of emission performance * Engine stopped	Diagnostic counter=0
31	Battery Voltage Abnormality: High	See Service Manual	P0563	168	3	Circuit interruption, short circuit or damage of harness Battery malfunction	Poor starting Insufficient output Deterioration of emission performance	Key switch to "OFF"
32	QR (IQA) Data Error	Contact dealer	P0602	523538	2	Abnormal QR code correction data	Insufficient output	Diagnostic counter=0
33	No QR (IQA) Data	Contact dealer	P0602	523538	7	QR code correction data unwritten	Insufficient output	Diagnostic counter=0
34	ECU Flash-ROM Error	Stop ENG, See Service Manual	P0605	628	2	Incorrect change in internal flash ROM observed	Engine stops	Key switch to "OFF"
35	ECU CPU (Main IC) Error	Stop ENG, See Service Manual	P0606	1077	2	CPU malfunction or IC malfunction	Engine stops	Key switch to "OFF"
36	ECU CPU (Monitoring IC) Error	Stop ENG, See Service Manual	P0606	523527	2	Malfunction of IC for monitoring CPU	Engine stops	Key switch to "OFF"

https://truckmanualshub.com/

Handling Instructions

No.	DTC name Text 1	Corrective action Text 2	ISO 14229 P-Code	J1939-73		Detection item	Behavior during malfunction	DTC recovery from error
				SPN	FMI			
37	Injector Charge Voltage Abnormality: Low	Stop ENG, See Service Manual	P0611	523525	1	Insufficient injector charge voltage ECU charge circuit malfunction	Insufficient output Deterioration of emission performance * Engine stopped	Key switch to "OFF"
38	Open Circuit of SCV	Stop ENG, See Service Manual	P0627	1347	5	Circuit interruption of SCV (MPROP)	Insufficient output Deterioration of emission performance	Key switch to "OFF"
39	SCV (MPROP) Drive System Error	Stop ENG, See Service Manual	P0628	1347	4	Ground short circuit of SCV (MPROP)	Insufficient output Deterioration of emission performance Engine stops	Key switch to "OFF"
40	+B Short Circuit of SCV(MPROP)	Stop ENG, See Service Manual	P0629	1347	3	+B short circuit of SCV (MPROP)	Insufficient output Deterioration of emission performance * Engine stopped	Key switch to "OFF"
41	Injector Abnormality	Stop ENG, See Service Manual	P062B	1077	12	Injector drive IC malfunction, full disconnection of COM1TWV drive system, or full disconnection of COM2TWV drive system	Engine stops	Key switch to "OFF"
42	Internal injector drive circuit short	See Service Manual	P062D	523605	6	Short circuit of injector drive IC	Insufficient output Increase in vibrations Deterioration of emission performance * Engine stopped	Key switch to "OFF"
43	Sensor Supply Voltage 1 Abnormality: Low	See Service Manual	P0642	3509	4	Sensor supply voltage 1 error or recognition error	Poor starting Insufficient output Deterioration of emission performance * Engine stopped	Key switch to "OFF"
44	Sensor Supply Voltage 1 Abnormality: High	See Service Manual	P0643	3509	3	Sensor supply voltage 1 error or recognition error	Poor starting Insufficient output Deterioration of emission performance * Engine stopped	Key switch to "OFF"

https://truckmanualshub.com/

No.	DTC name Text 1	Corrective action Text 2	ISO 14229 P-Code	J1939-73 SPN	J1939-73 FMI	Detection item	Behavior during malfunction	DTC recovery from error
45	Sensor Supply Voltage 2 Abnormality: Low	See Service Manual	P0652	3510	4	Sensor supply voltage 2 error or recognition error	Poor starting Insufficient output Deterioration of emission performance	Key switch to "OFF"
46	Sensor Supply Voltage 2 Abnormality: High	See Service Manual	P0653	3510	3	Sensor supply voltage 2 error or recognition error	Poor starting Insufficient output Deterioration of emission performance	Key switch to "OFF"
47	Sensor Supply Voltage 3 Abnormality: Low	See Service Manual	P0662	3511	4	Sensor supply voltage 3 error or recognition error	Poor starting	Key switch to "OFF"
48	Sensor Supply Voltage 3 Abnormality: High	See Service Manual	P0662	3511	3	Sensor supply voltage 3 error or recognition error	Poor starting	Key switch to "OFF"
49	Main relay is locked in closed position	See Service Manual	P0687	1485	2	Main relay malfunction	Battery discharged	Key switch to "OFF"
50	Gnd Short Circuit of Start Relay Driving Circuit	See Service Manual	P081A	677	4	Ground short circuit of starter relay drive circuit		Key switch to "OFF"
51	Accelerator Position Sensor 1 Abnormality: Low	See Service Manual	P2122	91	4	Circuit interruption or ground short circuit of sensor/harness	Insufficient output	Diagnostic counter=0
52	Accelerator Position Sensor 1 Abnormality: High	See Service Manual	P2123	91	3	Power supply short circuit of sensor/ harness	Insufficient output	Diagnostic counter=0
53	Accelerator Position Sensor 2 Abnormality: Low	See Service Manual	P2127	29	4	Circuit interruption or ground short circuit of sensor/harness	Insufficient output	Diagnostic counter=0
54	Accelerator Position Sensor 2 Abnormality: High	See Service Manual	P2128	29	3	Power supply short circuit of sensor/ harness	Insufficient output	Diagnostic counter=0
55	Accelerator Position Sensor Error (CAN)	See Service Manual	P2131	523543	2	Abnormal message received from machine	Insufficient output	Diagnostic counter=0 (Immediate recovery after normal recovery of CAN signal)
56	No.1 & 4 cylinder injector short to +B	Stop ENG, See Service Manual	P2148	523523	3	+B short circuit or GND short circuit of harness	Insufficient output Increase in vibrations Deterioration of emission performance * Engine stopped	Key switch to "OFF"

https://truckmanualshub.com/

Handling Instructions

No.	DTC name Text 1	Corrective action Text 2	ISO 14229 P-Code	J1939-73		Detection item	Behavior during malfunction	DTC recovery from error
				SPN	FMI			
57	No.2 & 3 cylinder injector short to +B	Stop ENG, See Service Manual	P2151	523524	3	+B short circuit or GND short circuit of harness	Insufficient output Increase in vibrations Deterioration of emission performance * Engine stopped	Key switch to "OFF"
58	Barometric Pressure Sensor Error: Low	See Service Manual	P2228	108	4	Ground short circuit of sensor/internal ECU circuit	Insufficient output	Diagnostic counter=0
59	Barometric Pressure Sensor Error: High	See Service Manual	P2229	108	3	+B short circuit of sensor/internal ECU circuit	Insufficient output	Diagnostic counter=0
60	Pressure limiter not open	Stop ENG, See Service Manual	P2293	679	7	Stuck P/L valve P/L valve cannot open (with low engine output)	Engine stops	Key switch to "OFF"
61	Rail Pressure Sensor Abnormality After P/L Open	Stop ENG, See Service Manual	P2293	679	16	Rail pressure too high or too low after P/L valve opened	Engine stops	Key switch to "OFF"
62	CAN1 Bus off	See Service Manual	U0077	523604	2	CAN1 +B/GND short circuit or high traffic malfunction	Insufficient output * Transmission data NG	Key switch to "OFF"
63	CAN2 Bus off	See Service Manual	U0075	523547	2	CAN2 +B/GND short circuit or high traffic malfunction	Insufficient output * Transmission data NG	Key switch to "OFF"
64	CAN-KBT Frame error	See Service Manual	U0081	523548	2	Circuit interruption of CAN_KBT original frame	Insufficient output	Key switch to "OFF"
65	Intake air temp. built-in MAF sensor abnormality: Low	See Service Manual	P0072	171	4	Ground short circuit of sensor/harness	-	Diagnostic counter=0
66	Intake air temp. built-in MAF sensor abnormality: High	See Service Manual	P0073	171	3	Circuit interruption of sensor/harness +B short circuit of sensor/harness	-	Diagnostic counter=0
67	Intake Air Volume: Low	See Service Manual	P0101	132	1	Insufficient intake (turboblower IN hose disconnected)	Insufficient output	Key switch to "OFF"
68	MAF Sensor Abnormality: Low	See Service Manual	P0102	132	4	Circuit interruption of sensor/harness Ground short circuit of sensor/harness	Insufficient output Deterioration of emission performance	Key switch to "OFF"

https://truckmanualshub.com/

No.	DTC name Text 1	Corrective action Text 2	ISO 14229 P-Code	J1939-73 SPN	J1939-73 FMI	Detection item	Behavior during malfunction	DTC recovery from error
69	MAF Sensor Abnormality: High	See Service Manual	P0103	132	3	+B short circuit of sensor/harness	Insufficient output Deterioration of emission performance	Key switch to "OFF"
70	EGR actuator open circuit	See Service Manual	P0403	523574	3	Circuit interruption of EGR motor coil	Insufficient output Deterioration of emission performance	Key switch to "OFF"
71	EGR actuator coil short	See Service Manual	P0404	523574	4	Short circuit of EGR coil	Insufficient output Deterioration of emission performance	Key switch to "OFF"
72	EGR position sensor failure	See Service Manual	P0409	523572	4	EGR position sensor malfunction	Insufficient output Deterioration of emission performance	Key switch to "OFF"
73	Exhaust gas temp. sensor 1 (T1) abnormality: Low	See Service Manual	P0543	3242	4	Ground short circuit of sensor/harness	None	Key switch to "OFF"
74	Exhaust gas temp. sensor 1 (T1) abnormality: High	See Service Manual	P0544	3242	3	Circuit interruption of sensor/harness +B short circuit of sensor/harness	None	Key switch to "OFF"
75	Exhaust Gas Temp. Sensor 0 (T0) Abnormality: Low	See Service Manual	P0546	4765	4	Ground short circuit of sensor/harness	None	Key switch to "OFF"
76	Exhaust Gas Temp. Sensor 0 (T0) Abnormality: High	See Service Manual	P0547	4765	3	Circuit interruption of sensor/harness +B short circuit of sensor/harness	None	Key switch to "OFF"
77	EEPROM check sum error	See Service Manual	P1990	523700	13	KBT EEPROM Checksum discrepancy	None	Key switch to "OFF"
78	Intake throttle feedback error	See Service Manual	P2108	523580	2	Abnormal feedback of intake throttle DC motor	None	Key switch to "OFF"
79	Accelerator position sensor correlation error	See Service Manual	P2135	91	2	Excessive discrepancy in output of two sensors	Insufficient output	Diagnostic counter=0
80	EGR actuator valve stuck	See Service Manual	P2413	523575	7	Stuck EGR valve	Insufficient output Deterioration of emission performance	Key switch to "OFF"

https://truckmanualshub.com/

No.	DTC name Text 1	Corrective action Text 2	ISO 14229 P-Code	J1939-73		Detection item	Behavior during malfunction	DTC recovery from error
				SPN	FMI			
81	EGR (DC motor) Overheat	See Service Manual	P2414	523576	2	Abnormally high temperature of EGR motor	Insufficient output Deterioration of emission performance	Key switch to "OFF"
82	EGR (DC motor) temp. sensor failure	See Service Manual	P2415	523577	2	Malfunction of EGR motor temperature sensor	Insufficient output Deterioration of emission performance	Key switch to "OFF"
83	Exhaust Gas Temp. Sensor 2 (T2) Abnormality: Low	See Service Manual	P242C	3246	4	Ground short circuit of sensor/harness	None	Key switch to "OFF"
84	Exhaust Gas Temp. Sensor 2 (T2) Abnormality: High	See Service Manual	P242D	3246	3	Circuit interruption of sensor/harness +B short circuit of sensor/harness	None	Key switch to "OFF"
85	Differential Pressure Sensor 1 Abnormality: Low	See Service Manual	P2454	3251	4	Ground short circuit of sensor/harness	None	Key switch to "OFF"
86	Differential Pressure Sensor 1 Abnormality: High	See Service Manual	P2455	3251	3	Circuit interruption of sensor/harness +B short circuit of sensor/harness	None	Key switch to "OFF"
87	Intake Throttle Lift Sensor Abnormality: Low	See Service Manual	P2621	523582	4	Intake throttle lift sensor low	None	Key switch to "OFF"
88	Intake Throttle Lift Sensor Abnormality: High	See Service Manual	P2622	523582	3	Intake throttle lift sensor high	None	Key switch to "OFF"
89	Emission deterioration	See Service Manual	P3001	3252	0	Abnormally high DOC temperature due to uncombusted fuel	Insufficient output	Key switch to "OFF"
90	Exhaust Gas Tempe. Sensor 0 Emergency High	Stop ENG, See Service Manual	P3002	4765	0	Abnormally high DOC inlet temperature (T0)	Engine stops * Cannot start until 300 °C or less	Exhaust temperature sensor is 300 °C or less and key switch to "OFF"
91	Exhaust Gas Tempe. Sensor 1 Emergency High	Stop ENG, See Service Manual	P3003	3242	0	Abnormally high DPF inlet temperature (T1)	Engine stops * Cannot start until 300 °C or less	Exhaust temperature sensor is 300 °C or less and key switch to "OFF"
92	Exhaust Gas Tempe. Sensor 2 Emergency High	Stop ENG, See Service Manual	P3004	3246	0	Abnormally high DPF outlet temperature (T2)	Engine stops * Cannot start until 300 °C or less	Exhaust temperature sensor is 300 °C or less and key switch to "OFF"

https://truckmanualshub.com/

No.	DTC name Text 1	Corrective action Text 2	ISO 14229 P-Code	J1939-73 SPN	J1939-73 FMI	Detection item	Behavior during malfunction	DTC recovery from error
93	Excessive PM3	Start DPF Parked Regeneration immediately	P3006	3701	15	Excessive accumulation of PM (estimate)-Level 3	Insufficient output	Diagnostic counter=0
94	Excessive PM4	Stop engine!! Contact dealer immediately	P3007	3701	16	Excessive accumulation of PM (estimate)-Level 4	Insufficient output	Diagnostic counter=0
95	Excessive PM5	Stop engine!! Contact dealer immediately	P3008	3701	0	Excessive accumulation of PM (estimate)-Level 5	Insufficient output	Key switch to "OFF" (Reset by service tool)
96	Boost pressure low	See Service Manual	P3011	132	15	Hose disconnected between turboblower OUT and intake flange Boost pressure sensor malfunction	Insufficient output	Key switch to "OFF"
97	Low Coolant Temp. in Parked Regeneration	See Service Manual	P3012	523589	17	Engine warm-up conditions not met during regeneration (insufficient coolant temperature increase)	None	Diagnostic counter=0 (Press manual regeneration button again.)
98	Parked regeneration time out	See Service Manual	P3013	523590	16	Regeneration does not end without an increase in DPF temperature	None	Diagnostic counter=0 (Press manual regeneration button again.)
99	All Exhaust Gas Temp. Sensor Failure	See Service Manual	P3018	523599	0	Simultaneous circuit interruption of all exhaust temperature sensors	None	Diagnostic counter=0
100	High Exhaust Gas Temperature After Emergency High Temp. DTC	Stop ENG, See Service Manual	P3023	523601	0	Exhaust temperature when a high exhaust temperature malfunction occurred	None Engine stops	Diagnostic counter=0
101	High frequency of regeneration	See Service Manual	P3024	523602	0	Abnormal interval from the end of regeneration until the next regeneration is triggered	Deterioration of emission performance * NOx increase	Key switch to "OFF" (Reset by service tool)
102	Over heat pre-caution	Stop mowing!!	P3025	523603	15	Coolant temperature	Deterioration of emission performance	Diagnostic counter=0
103	No communication with EGR	See Service Manual	U0076	523578	2	Interruption of communication between EGR and CAN	Insufficient output Deterioration of emission performance	Key switch to "OFF"
104	CAN CCVS frame error	See Service Manual	U0082	523591	2	Interruption of communication	None	Key switch to "OFF"

https://truckmanualshub.com/

Handling Instructions

No.	DTC name Text 1	Corrective action Text 2	ISO 14229 P-Code	J1939-73		Detection item	Behavior during malfunction	DTC recovery from error
				SPN	FMI			
104	CAN CCVS frame error	See Service Manual	U0082	523591	2	between CAN and CCVS	None	Key switch to "OFF"
105	CAN CM1 frame error	See Service Manual	U0083	523592	2	Interruption of communication between CAN and CM1	None	Key switch to "OFF"
106	CAN ETC5 frame error	See Service Manual	U0086	523595	2	Interruption of communication between CAN and ETC5	None	Key switch to "OFF"
107	CAN TSC1 frame error	See Service Manual	U0087	523596	2	Abnormal interruption of communication between CAN and TSC1	None	Diagnostic counter=0
108	CAN EBC1 frame error	See Service Manual	U0089	523598	2	Abnormal interruption of communication between CAN and EBC1	None	Diagnostic counter=0
109	FUEL LEVEL LOW	Refuel		96	17	Remaining fuel volume at specified value or less (factory default setting=10%) Can be adjusted between 10% and 80%	None	Supply fuel until remaining fuel volume reaches the specified value or above

https://truckmanualshub.com/

Engine Configuration

This function is not supported.

1-Up Display Setup

With "SETUP 1-UP DISPLAY", the displayed parameters can be reset to the factory defaults, or the necessary parameters to be displayed can be selected.
The following 3 items appear when "SETUP 1-UP DISPLAY" is selected.

・USE DEFAULTS
・CUSTOM SETUP
・AUTOMATIC SCAN

■Use Defaults

With "USE DEFAULTS", the 1-up display parameters return to the factory defaults.

1. Press the menu key. After the main menu appears, use the arrow keys to highlight "SETUP 1-UP DISPLAY", and then press the Enter key.

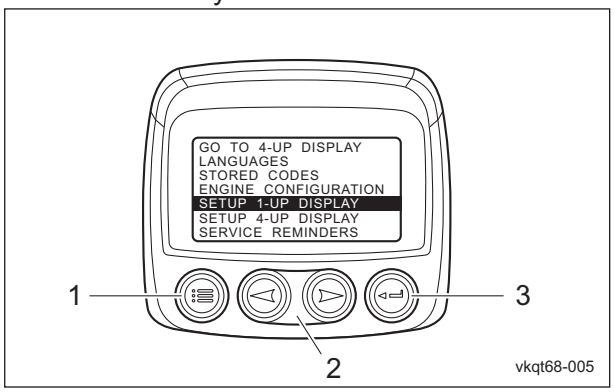

Use Defaults_001

1	Menu key
2	Arrow keys
3	Enter key

2. Highlight "USE DEFAULTS", and then press the Enter key.

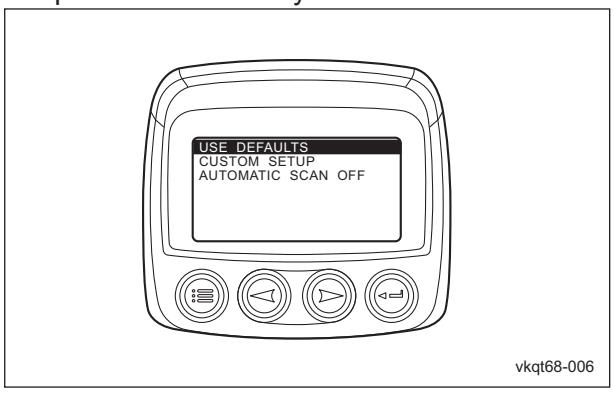

Use Defaults_002

3. "RESTORED TO DEFAULTS" appears in the monitor display, and the parameters are reset to the factory defaults of the following 8 items.
   [1] ENGINE SPEED
   [2] ENGINE COOLANT TEMPERATURE
   [3] %SOOT
   [4] FUEL LEVEL
   [5] ENGINE OIL PRESSURE
   [6] MACHINE HOURS
   [7] BATTERY POTENTIAL
   [8] DPF STATUS
4. After the settings have been applied, pressing the menu key once returns to the main menu, and pressing the key again returns to the 1-up/4-up display screen.

■Custom Setup

With "CUSTOM SETUP", the type and number of parameters as well as their display order can be specified.

1. Press the menu key. After the main menu appears, use the arrow keys to highlight "SETUP 1-UP DISPLAY", and then press the Enter key.

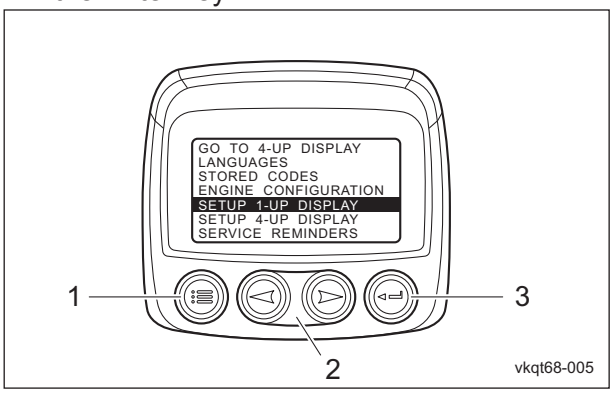

Custom Setup_001

1	Menu key
2	Arrow keys
3	Enter key

https://truckmanualshub.com/

Handling Instructions

2. Highlight "CUSTOM SETUP", and then press the Enter key.
   The list of parameters appears.

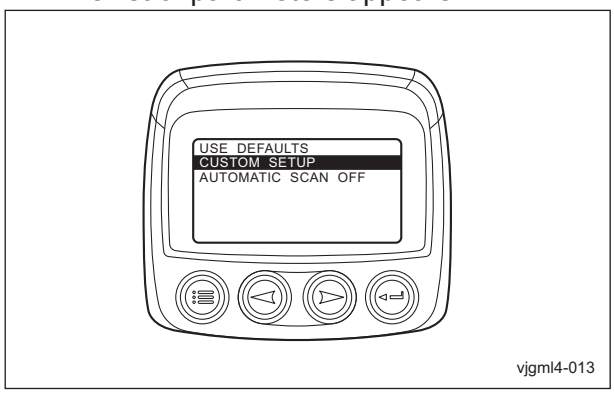

Custom Setup_002

3. Change the parameters.
   [1] To add a parameter
      a. Use the arrow keys to highlight the parameter to be added, and then press the Enter key.

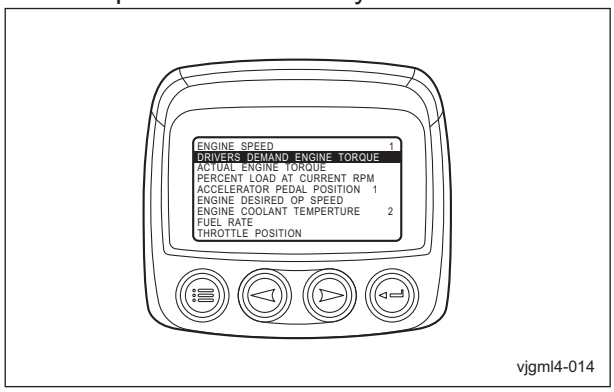

Custom Setup_003

      b. A number appears at the right of the selected parameter. This number indicates the display order for the parameter

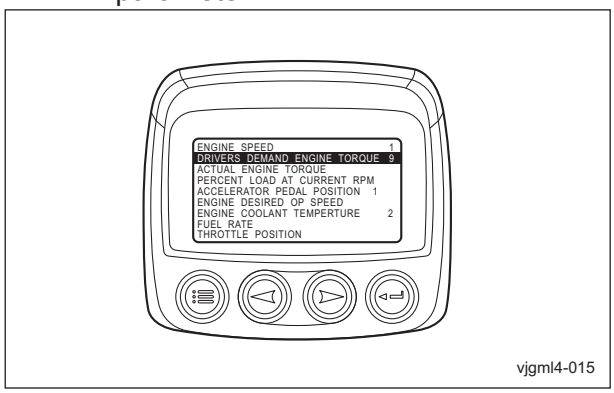

Custom Setup_004

   [2] To deselect a parameter and remove it from the list of displayed parameters
      a. Highlight the parameter, and then press the Enter key.

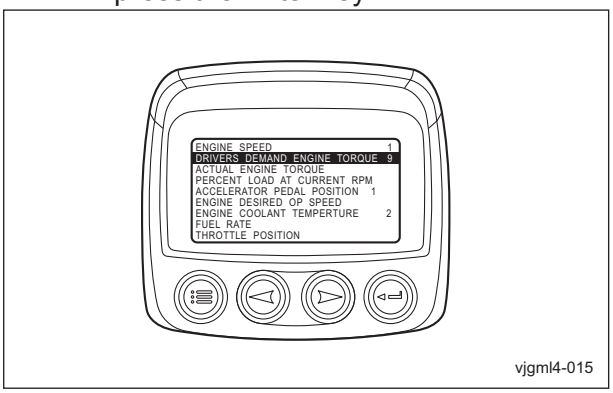

Custom Setup_005

      b. Check that the number at the right of the parameter disappeared.

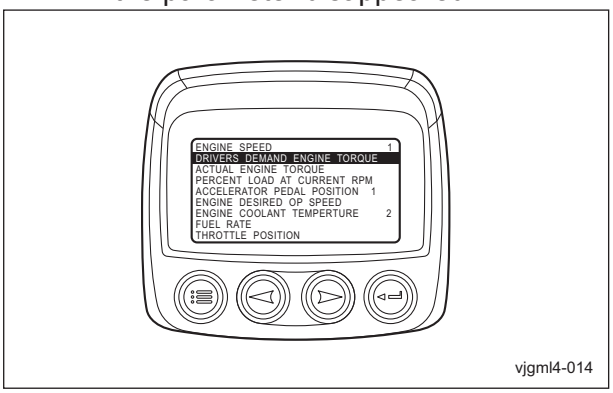

Custom Setup_006

4. After the settings have been applied, pressing the menu key once returns to the main menu, and pressing the key again returns to the 1-up/4-up display screen.

https://truckmanualshub.com/

■Automatic Scan

With "AUTOMATIC SCAN", the 1-up display can be set to automatically scroll through the selected parameters one by one.

1. Press the menu key.
   After the main menu appears, use the arrow keys to highlight "SETUP 1-UP DISPLAY", and then press the Enter key.

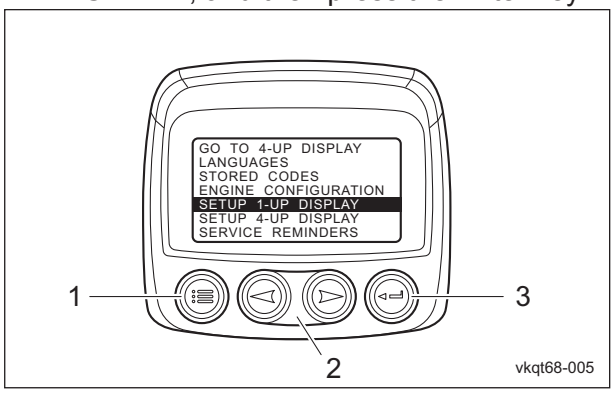

Automatic Scan_001

1	Menu key
2	Arrow keys
3	Enter key

2. When "AUTOMATIC SCAN ON" appears, the parameters are scrolled automatically. For manual scrolling, highlight "AUTOMATIC SCAN ON", and then press the Enter key.
   It turns into "AUTOMATIC SCAN OFF" and the parameters will be scrolled manually.

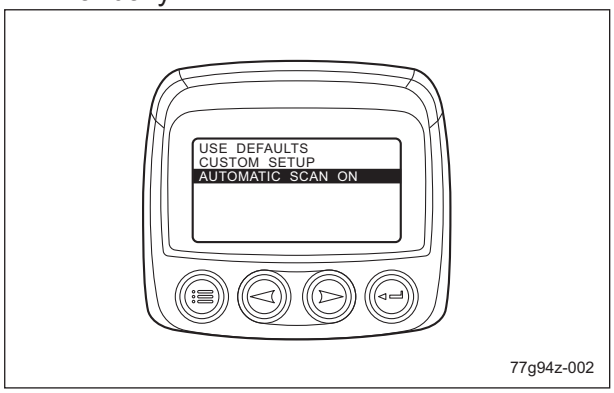

Automatic Scan_002

3. After the settings have been applied, pressing the menu key once returns to the main menu, and pressing the key again returns to the 1-up/4-up display screen.

Note:
When the parameters are scrolled automatically, press the Enter key once to pause scrolling.
When scrolling is paused, press the Enter key once to restart scrolling.

4-Up Display Setup

With "SETUP 4-UP DISPLAY", the displayed parameters can be reset to the factory defaults, or the monitor display of selected, necessary parameters can be set up.
The following 2 items appear when "SETUP 4-UP DISPLAY" is selected.

・USE DEFAULTS
・CUSTOM SETUP

■Use Defaults

With "USE DEFAULTS", the 4-up display parameters return to the factory defaults.

1. Press the menu key.
   After the main menu appears, use the arrow keys to highlight "SETUP 4-UP DISPLAY", and then press the Enter key.

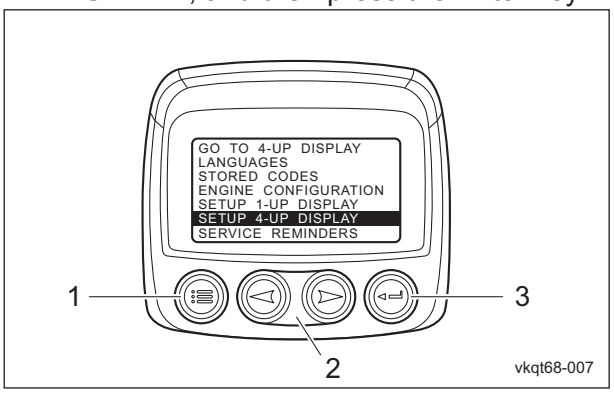

Use Defaults_001

1	Menu key
2	Arrow keys
3	Enter key

https://truckmanualshub.com/

2. Highlight "USE DEFAULTS", and then press the Enter key.

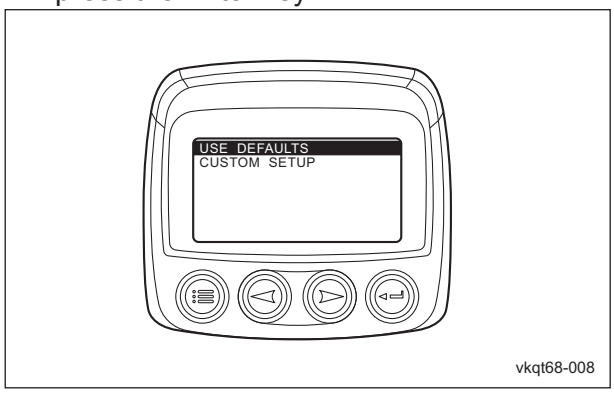

Use Defaults_002

3. "RESTORED TO DEFAULTS" appears in the monitor display, and the parameters are reset to the factory defaults of the following 8 items.
   - First page
     [1] ENGINE SPEED
     [2] ENGINE COOLANT TEMPERATURE
     [3] %SOOT
     [4] FUEL LEVEL
   - Second page
     [1] ENGINE OIL PRESSURE
     [2] MACHINE HOURS
     [3] BATTERY POTENTIAL
     [4] DPF STATUS
4. After the settings have been applied, pressing the menu key once returns to the main menu, and pressing the key again returns to the 1-up/4-up display screen.

■Custom Setup

With "CUSTOM SETUP", the type and number of parameters as well as their display order can be specified.

1. Press the menu key. After the main menu appears, use the arrow keys to highlight "SETUP 4-UP DISPLAY", and then press the Enter key.

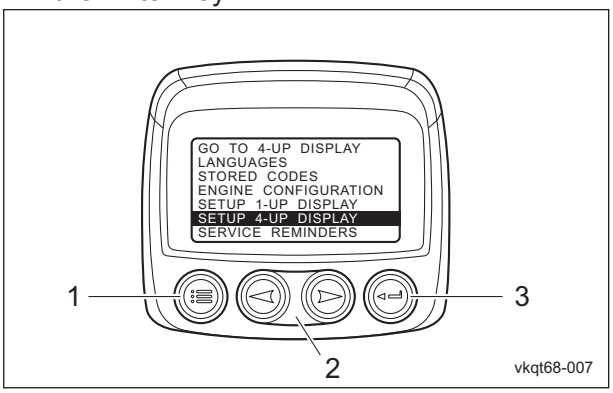

Custom Setup_001

1	Menu key
2	Arrow keys
3	Enter key

2. Highlight "CUSTOM SETUP", and then press the Enter key.

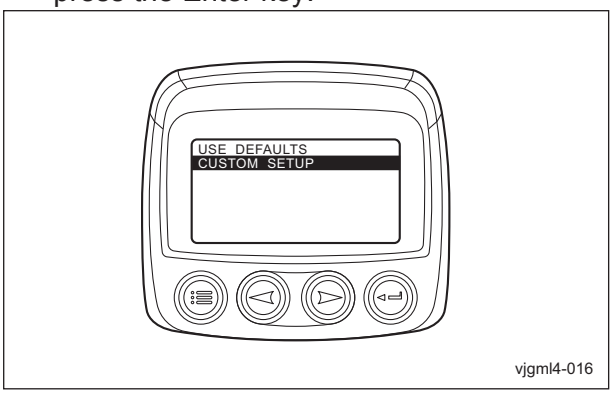

Custom Setup_002

https://truckmanualshub.com/

3. Select the page.
   [1] Check that the values for the four parameters are highlighted.

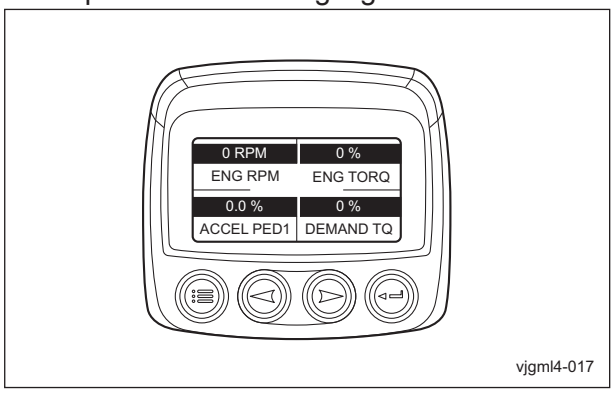

Custom Setup_003

1	Parameter values

   [2] Use the arrow keys to display the page to be changed, and then press the Enter key.
4. Change the parameters.
   [1] Check that the value for one parameter is highlighted.

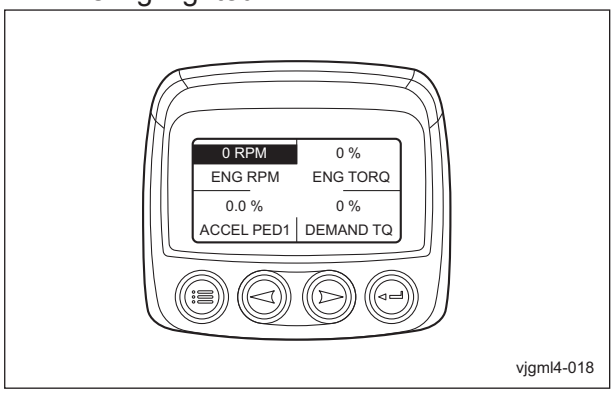

Custom Setup_004

   [2] Use the arrow keys to highlight the value of the parameter to be changed, and then press the Enter key.
   [3] The parameters appear.
   The number at the right of the parameter indicates the location in the 4-up display.
   1=Upper left
   2=Lower left
   3=Upper right
   4=Lower right

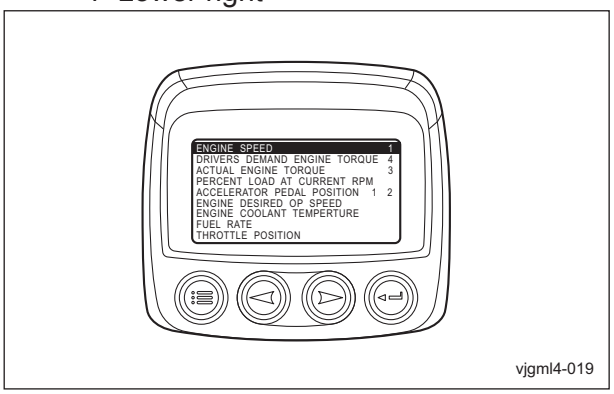

Custom Setup_005

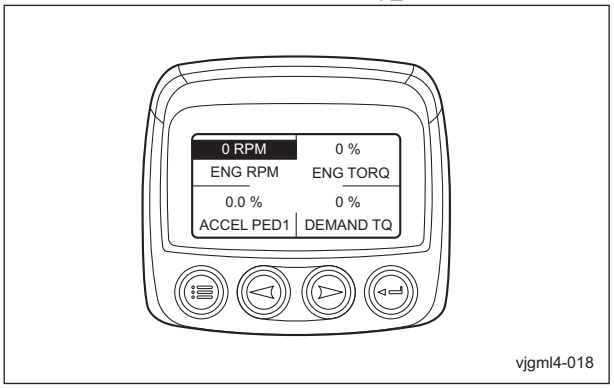

Custom Setup_006

   [4] To change to a different parameter
      a. Use the arrow keys to highlight the parameter to be selected, and then press the Enter key.

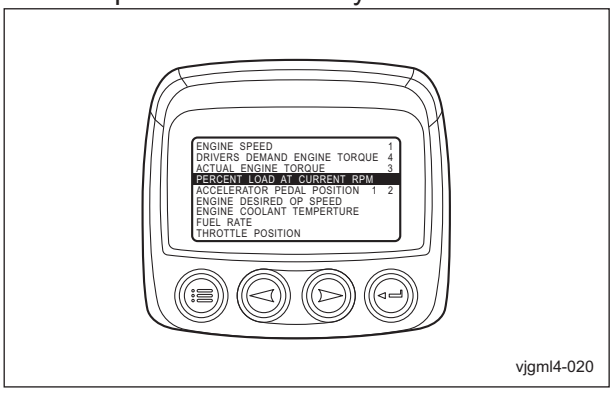

Custom Setup_007

https://truckmanualshub.com/

b. Check that a number appeared to the right of the selected parameter.

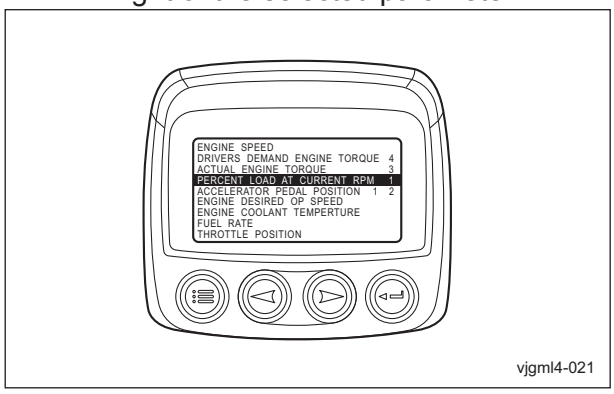

Custom Setup_008

c. Press the menu key and check that the parameter has changed.

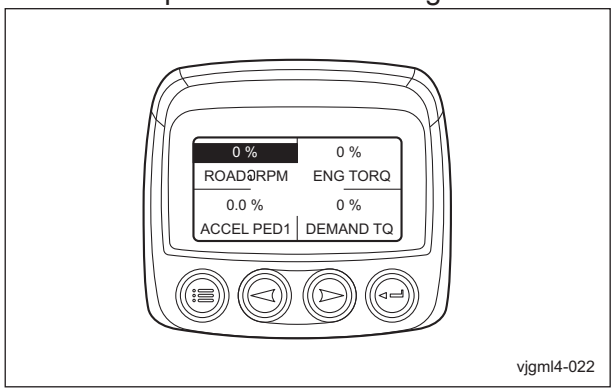

Custom Setup_009

[5] To deselect a parameter and remove it from the list of displayed parameters

a. Highlight the parameter to be removed, and then press the Enter key.

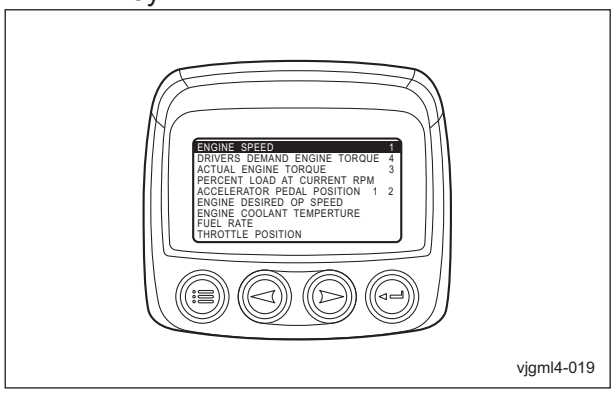

Custom Setup_010

b. Check that the number at the right of the parameter disappeared.

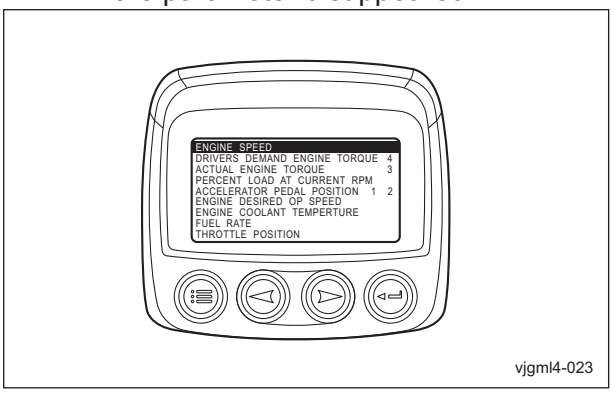

Custom Setup_011

c. Press the menu key and check that the parameter has changed to "EMPTY".

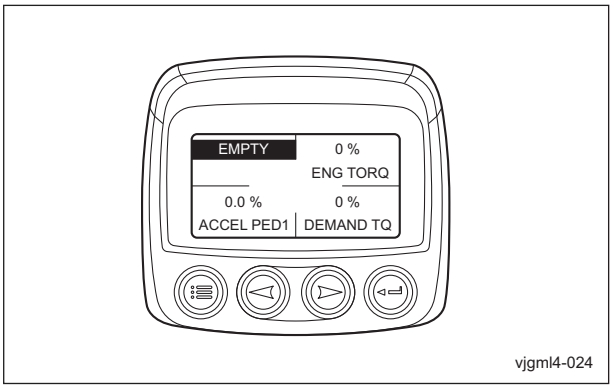

Custom Setup_012

5. Pressing the menu key once returns to the display for selecting the page.
6. To change other parameters, repeat steps 3 to 5.

Service Reminders

With "SERVICE REMINDERS", the notification of replacement time for the following 5 consumables can be specified.

- Engine oil
- Engine oil filter
- Hydraulic oil
- Hydraulic oil filter
- Air cleaner

The following 2 items appear when "SERVICE REMINDERS" is selected.

- RESET REMINDERS
- MODIFY REMINDERS

https://truckmanualshub.com/

■Reset Reminders

With "RESET REMINDER", displayed remaining time can be reset to the time specified with "MODIFY REMINDERS".

1. Press the menu key.
   After the main menu appears, use the arrow keys to highlight "SERVICE REMINDERS", and then press the Enter key.

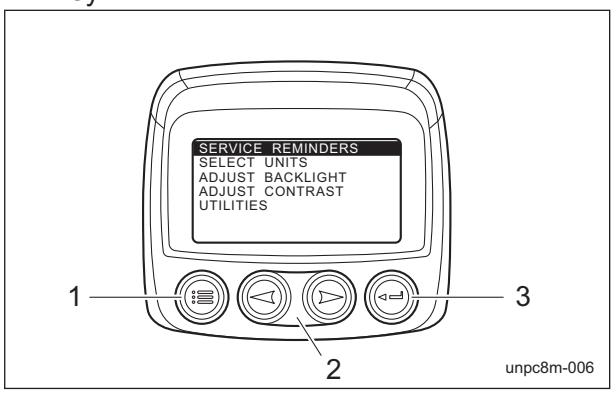

Reset Reminders_001

1	Menu key
2	Arrow keys
3	Enter key

2. Highlight "RESET REMINDER", and then press the Enter key.

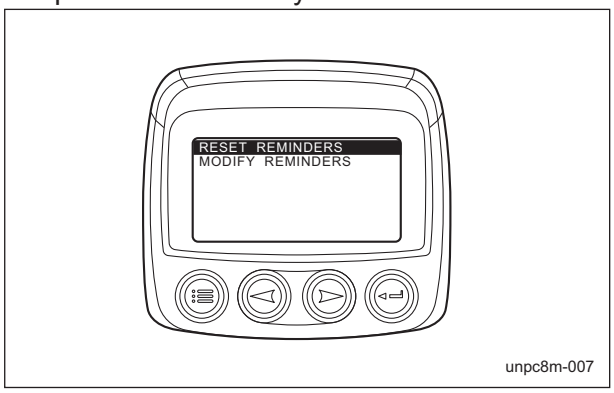

Reset Reminders_002

3. Use the arrow keys to highlight the item to be changed, and then press the Enter key. A plus appears at the right of the currently selected items.

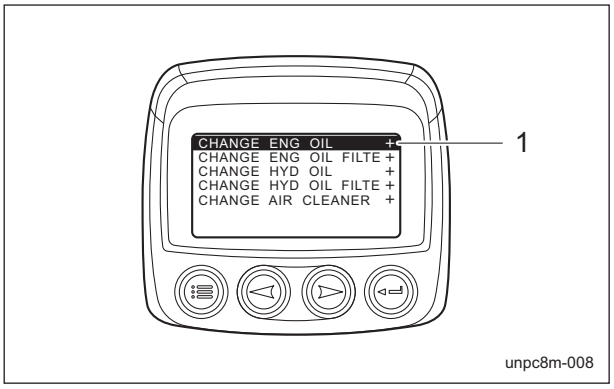

Reset Reminders_003

1	Plus

4. The remaining time for the selected item appears.

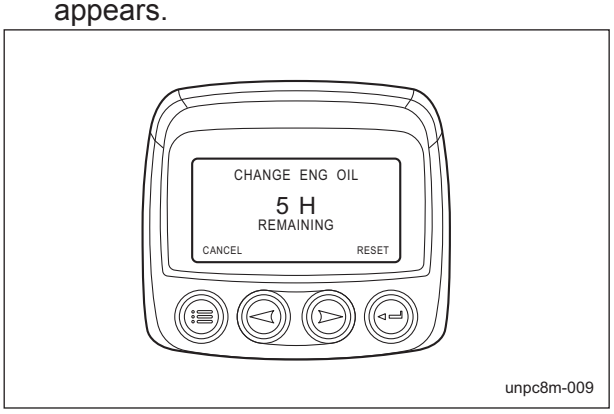

Reset Reminders_004

[1] To reset the remaining time to the specified time, press the Enter key.

[2] "RESET SERVICE REMINDER?" appears.
To reset, press the Enter key.
To cancel resetting, press the menu key.

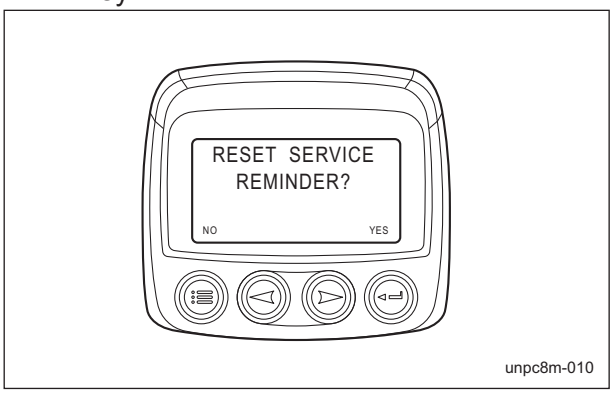

Reset Reminders_005

5. The screen for selecting the item appears.

https://truckmanualshub.com/

■Modify Reminders

With "MODIFY REMINDERS", the replacement time period for consumables can be specified.

1. Press the menu key.
   After the main menu appears, use the arrow keys to highlight "SERVICE REMINDERS", and then press the Enter key.

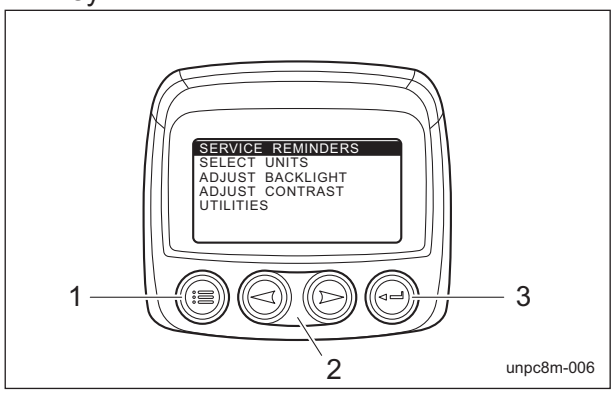

Modify Reminders_001

1	Menu key
2	Arrow keys
3	Enter key

2. Highlight "MODIFY REMINDERS", and then press the Enter key.

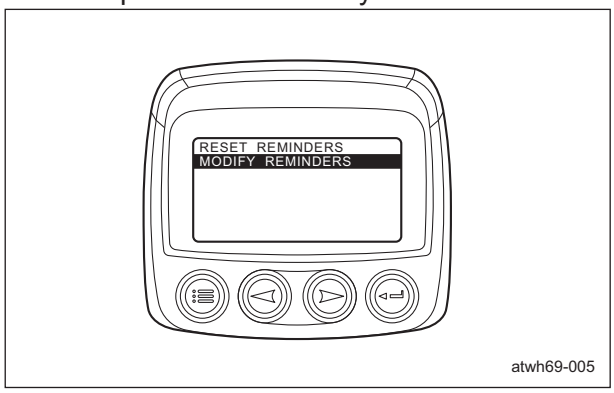

Modify Reminders_002

3. Use the arrow keys to highlight the item to be changed, and then press the Enter key. A plus appears at the right of the currently specified items.

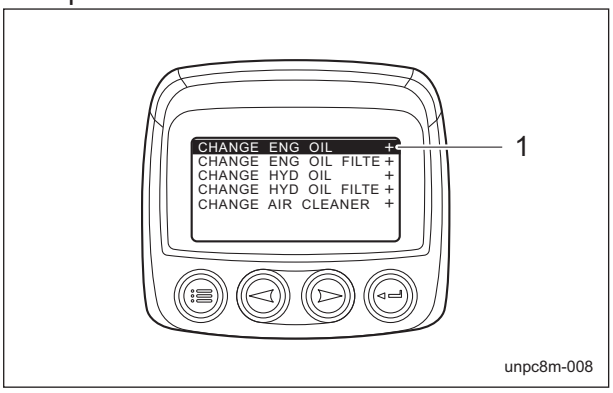

Modify Reminders_003

1	Plus

4. The replacement time period for the selected item appears.

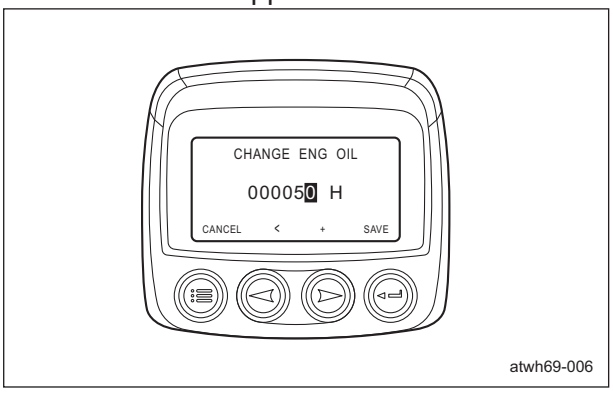

Modify Reminders_004

5. Highlight the digit to be changed.
   Press the right arrow key to increase the number. Press the left arrow key to change the digit.

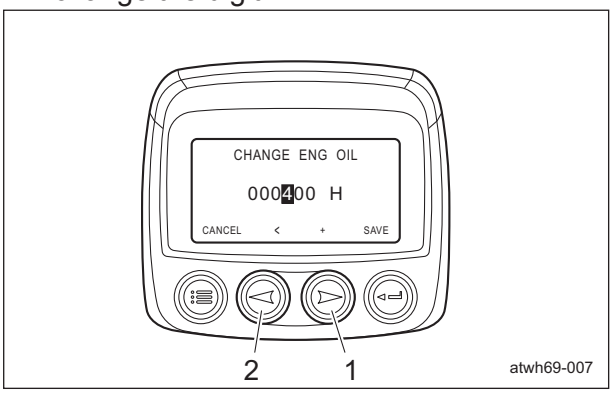

Modify Reminders_005

1	Right arrow key
2	Left arrow key

6. To save the specified time period, press the Enter key.

https://truckmanualshub.com/

7. "MODIFY SERVICE REMINDER?" appears.
   To save the changes, press the Enter key.
   To cancel the changes, press the menu key.

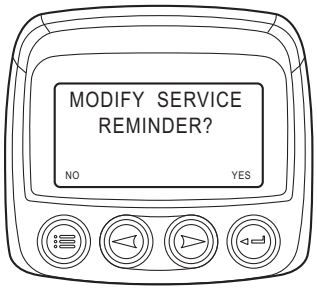

Modify Reminders_006

8. The display for selecting the item appears.
   Initial and regular time periods

	Initial time period	Regular time period
Engine oil	50 hrs.	400 hrs.
Engine oil filter	50 hrs.	400 hrs.
Hydraulic oil	100 hrs.	500 hrs.
Hydraulic oil filter	100 hrs.	500 hrs.
Air cleaner	600 hrs.	600 hrs.

Note:
The factory default replacement time periods are the initial time periods.

■Reminder Display

Caution

If a warning message appears, immediately stop operation, and then perform the replacement procedure.

1. When the specified replacement time period for a consumable has passed, a warning message appears in the monitor display and the LED (yellow) lights up.

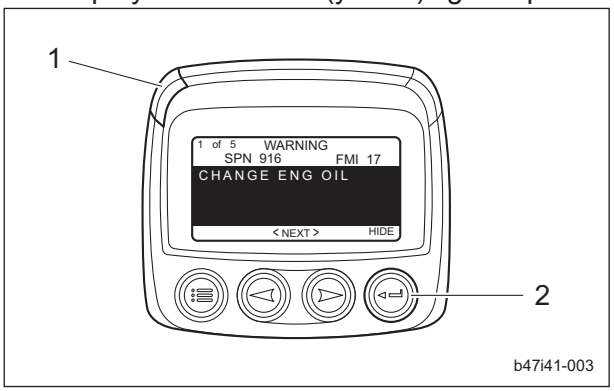

Reminder Display_001

1	LED (yellow)
2	Enter key

2. Pressing the Enter key changes the screen from the warning message to the parameter display.
3. A warning mark appears in the upper-right corner of the monitor display.

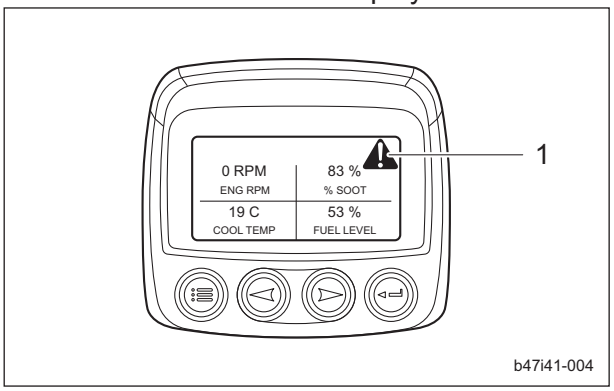

Reminder Display_002

1	Warning mark

4. Change the replacement time period of consumables with "RESET REMINDERS" or "MODIFY REMINDERS".
   When the replacement time period is changed, the warning message and mark disappear.

https://truckmanualshub.com/

Handling Instructions

Select Units

With "SELECT UNITS", the units of parameter values can be set to any of the following three formats.

- ENGLISH
- METRIC KPA
- METRIC BAR

An asterisk appears at the right of the currently selected unit.

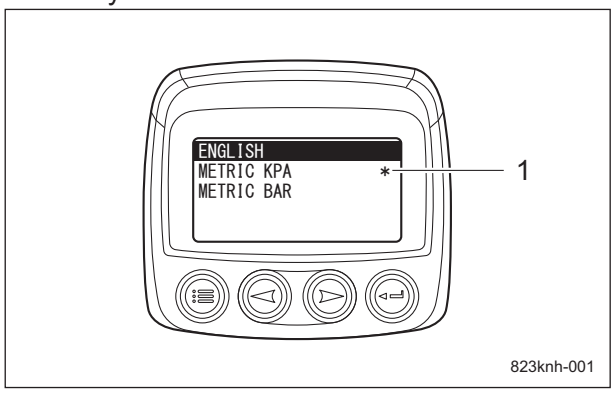

Select Units_001

1	Asterisk

Monitor display S	Units		
	ENGLISH	METRIC KPA	METRIC BAR
ENG RPM	RPM	RPM	RPM
DEMAND TQ	%	%	%
ENG TORQ	%	%	%
LOAD@RPM	%	%	%
ACCEL PED1	%	%	%
DES ENG SP	RPM	RPM	RPM
COOL TEMP	F	C	C
FUEL RATE	G/HR	L/HR	L/HR
THROTTLE	%	%	%
BST PRES	PSI	kPa	BAR
MANI TEMP	F	C	C
BAT VOLT	VDC	VDC	VDC
BARO PRES	PSI	kPa	BAR
AMB TEMP	F	C	C
AIR IN TP	F	C	C
FUEL USED	Gal	L	L
ENG HRS	H	H	H
OIL PRES	PSI	kPa	BAR
RAIL PRES	PSI	kPa	BAR
AIR RATE	Gal	L	L
DOC TEMP	F	C	C
EF IN T	F	C	C
DIFF PRES	PSI	kPa	BAR
EF OUT T	F	C	C
%SOOT	%	%	%
MACH HRS	H	H	H
FUEL LEVEL	%	%	%

Note:
The factory default unit is "METRIC KPA".

https://truckmanualshub.com/

Adjust Backlight

With "ADJUST BACKLIGHT", the brightness of the monitor display can be adjusted.
Press the right arrow key to make the display brighter. Press the left arrow key to make the display darker.

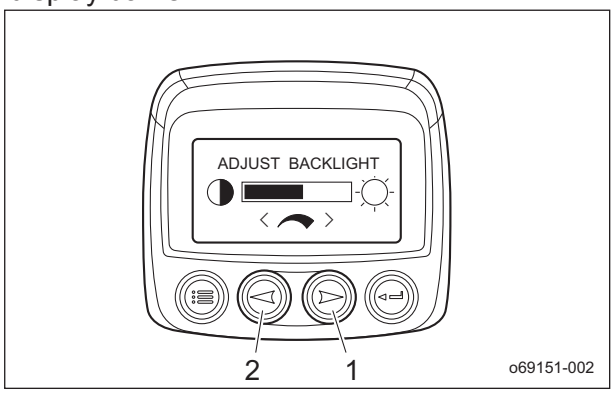

Adjust Backlight_001

1	Right arrow key
2	Left arrow key

Adjust Contrast

With "ADJUST CONTRAST", the contrast of the monitor display can be adjusted.
Press the right arrow key to decrease the contrast. Press the left arrow key to increase the contrast.

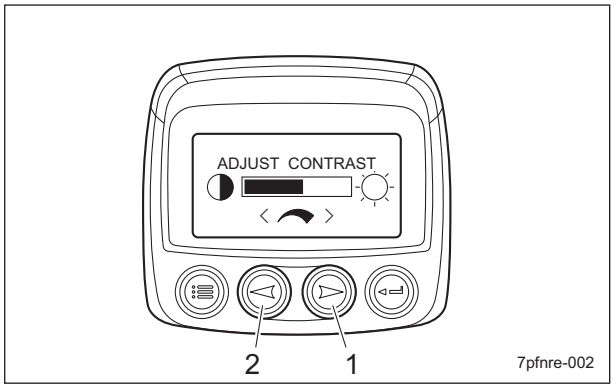

Adjust Contrast_001

1	Right arrow key
2	Left arrow key

Utilities

With "UTILITIES", the remaining fuel volume can be specified and the monitor configuration can be displayed.
The following 6 items appear when "UTILITIES" is selected.

- GAGE DATA
- REMOVE ALL GAGES
- SOFTWARE VERSION
- FAULT CONVERSION
- ANALOG INPUT
- OEM

Note:
"GAGE DATA" and "REMOVE ALL GAGES" are not supported on this machine.

■Software Version

With "SOFTWARE VERSION", the software version of the monitor can be displayed.

■Fault Conversion

With "FAULT CONVERSION", the J1939 fault code conversion method can be specified.
The monitor normally detects J1939 version 4.
Since the engine ECU of this machine uses J1939 version 4, no adjustments are necessary.

https://truckmanualshub.com/

■Analog Input

With "ANALOG INPUT", remaining fuel volume information can be specified.
The following 2 items appear when "ANALOG INPUT" is selected.

・BACKLIGHT DIMMER
・FUEL LEVEL

Important

"BACKLIGHT DIMMER" is not supported on this machine.
Always select "FUEL LEVEL".
If "BACKLIGHT DIMMER" is selected, "NO DATA" appears as the value for the fuel level parameter.

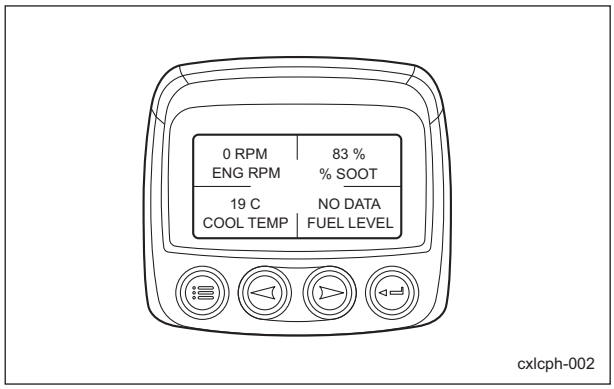

Analog Input_001

Note:
The factory default analog input is "FUEL LEVEL".

Fuel Level

With "FUEL LEVEL", the low fuel level can be specified.

1. Press the menu key.
   After the main menu appears, use the arrow keys to highlight "UTILITIES", and then press the Enter key.

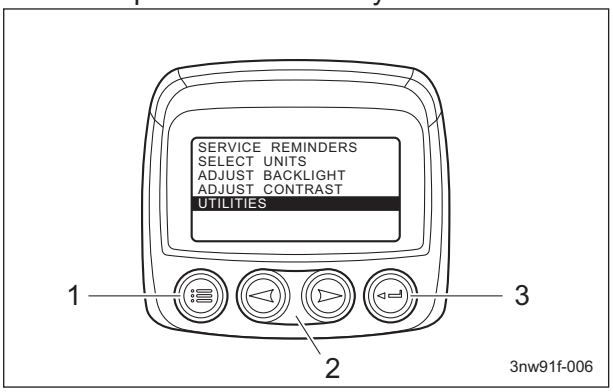

Fuel Level_001

1	Menu key
2	Arrow keys
3	Enter key

2. Highlight "ANALOG INPUT", and then press the Enter key.

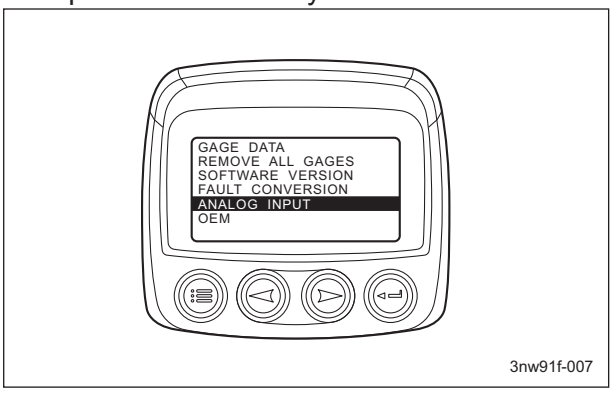

Fuel Level_002

3. Highlight "FUEL LEVEL", and then press the Enter key.

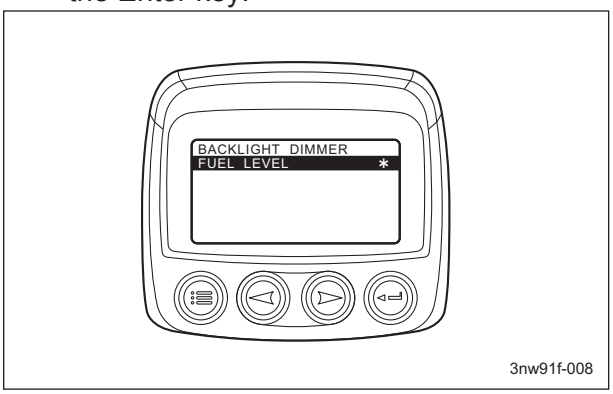

Fuel Level_003

https://truckmanualshub.com/

4. Highlight "SET LOW FUEL LEVEL", and then press the Enter key.

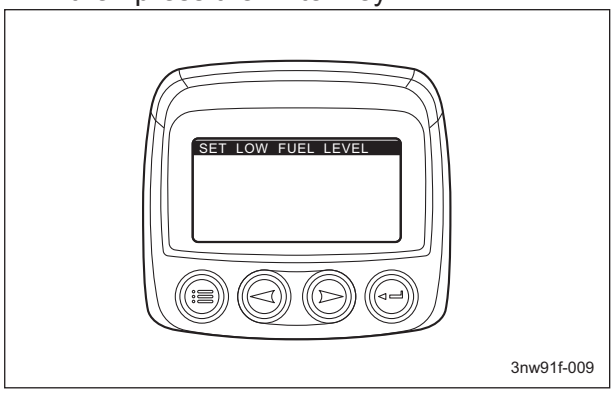

Fuel Level_004

5. "LOW FUEL" appears.

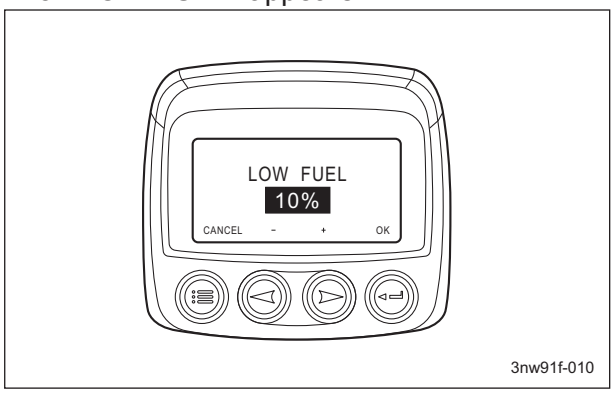

Fuel Level_005

6. Press the right arrow key to increase the value. Press the left arrow key to decrease the value.
   The value can be set between 10% and 80% in 5% increments.
7. To save the specified value, press the Enter key.

Note:
The factory default low fuel level is 10%.

Low Fuel Level Display

Caution

If a warning message appears, immediately stop operation, and then supply fuel.

1. When the fuel level falls below the specified low fuel level, a warning message appears in the monitor display and the LED (yellow) lights up.
   The warning message appears on two pages.
   Use the arrow keys to change the page.
   - Text 1

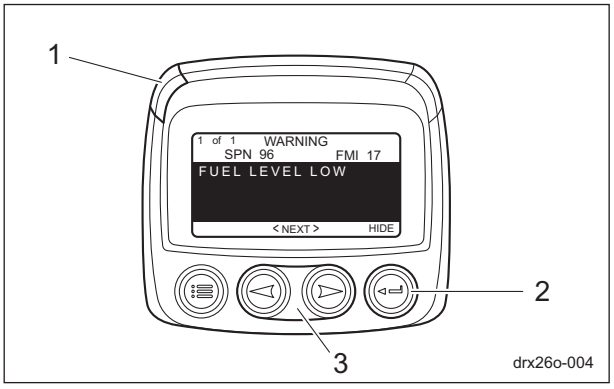

Low Fuel Level Display_001

1	LED (yellow)
2	Enter key
3	Arrow keys

   - Text 2

Low Fuel Level Display_002

2. Pressing the Enter key changes the screen from the warning message to the parameter display.

https://truckmanualshub.com/

3. A warning mark appears in the upper-right corner of the monitor display.

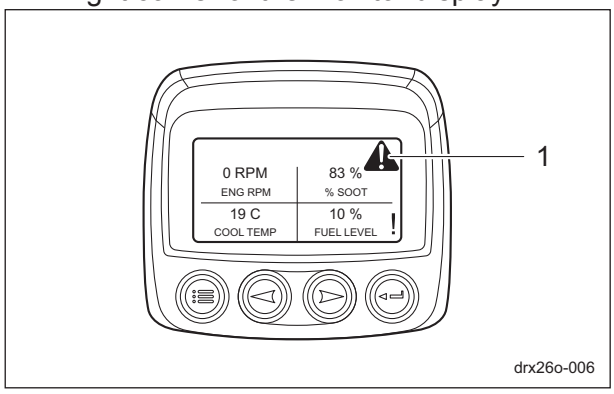

Low Fuel Level Display_003

1	Warning mark

4. When fuel is supplied to bring the fuel level above the specified low fuel level, the warning message and mark disappear.

■OEM

"OEM" is used when the manufacturer specifies factory default settings.

> **Important**
>
> No adjustments by the operator are necessary.

Travel of Machine

Moving the Machine

> **⚠ Caution**
>
> When traveling, be sure to stop the reel cutters and raise the mower units.

1. Start the engine.
   "Procedure to Start Engine" (Page 4-22)
2. Raise all mower units, and then engage the mower lock levers (latches) for mower units #4 and #5.
3. Depress the brake pedal to release the parking brake.
4. Slowly depress the traveling pedal.
5. The machine will start to move.

Towing the Machine

If the machine does not travel due to engine trouble, etc., you can move it by towing it.

> **⚠ Caution**
>
> Tow the machine at a low speed while paying close attention.

> **⚠ Caution**
>
> Do not touch the unload valve except when towing the machine.

> **⚠ Caution**
>
> Before restarting the engine, be sure to close the unload valve.

1. Stop the engine.
   "Procedure to Stop Engine" (Page 4-23)
2. Apply the parking brake and chock the wheels.
3. Set the 2WD/4WD selector switch to the "2WD" position.
4. Make sure that the steering wheel is raised completely.
5. Pull up the forward/backward adjustment lever, and then slide the seat backward completely.

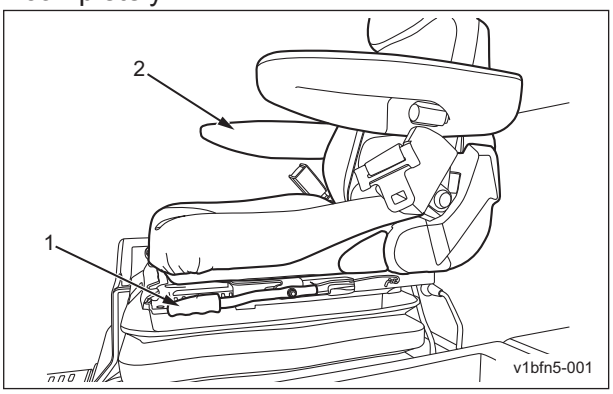

Towing the Machine_001

1	Forward/backward adjustment lever
2	Seat

https://truckmanualshub.com/

6. While pulling up the lever behind the seat, tilt the seat forward.

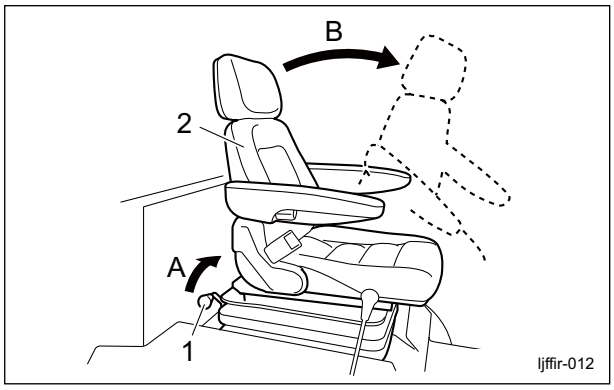

Towing the Machine_002

1	Lever
2	Seat
A	Pull up
B	Tilt forward

7. Turn the unload valve, located beside the hydraulic pump, 90 degrees (so that it is vertical) to open it.

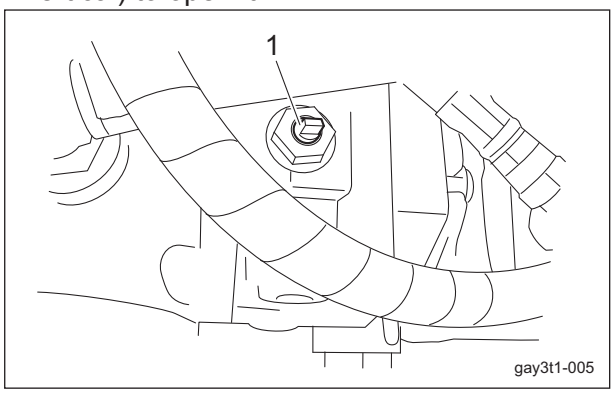

Towing the Machine_003

1	Unload valve

8. Remove the wheel stopper, and then depress the brake pedal to release the parking brake.
9. Tow the machine slowly.

Cutting Work

Cutting Work

Warning

Do NOT start to move or stop the machine abruptly.
To do so is very dangerous. In addition, it may damage the hydraulic system or result in oil leakage.

Caution

Cutting work must be performed at an appropriate speed for the site and location.
When cutting over bumpy surfaces, keep the engine rpm steady, and slow down the cutting speed.

Caution

Knife rotation will be turned on or off based on the sensor-detected position of the mower units.
Please note that if you stop operating the mower unit up/down lever before the mower units are raised completely, knife rotation may not stop.

1. Drive to the cutting area.
   "Moving the Machine" (Page 4-64)
2. Move the throttle knob to the "High speed" position to run the engine at the maximum rpm.
3. Right before starting cutting work, release the mower lock levers for mower units #4 and #5.
4. Shift the mower unit up/down lever to the "DOWN" position to lower the mower units.

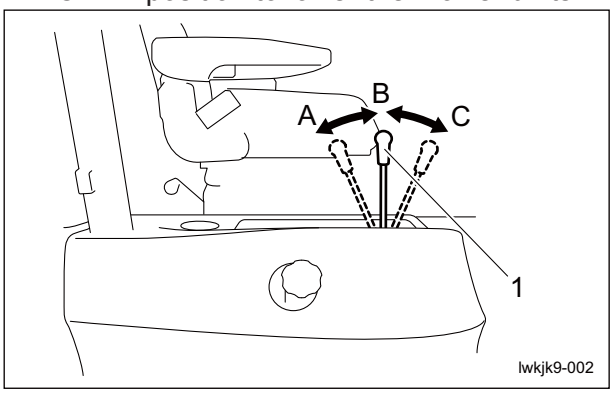

Cutting Work_001

1	Mower unit up/down lever
A	UP
B	Neutral
C	DOWN

https://truckmanualshub.com/

Caution

When the engine rotation is at low speed, do not rotate the knives.
It may result in the hydraulic system malfunction.

5. Set the knife rotation switch to the "ON" position to rotate the knives of all mower units.

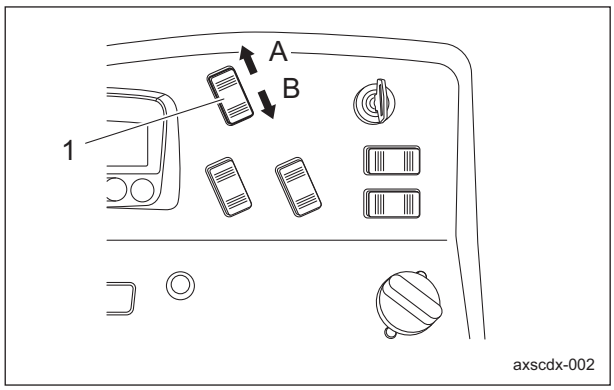

Cutting Work_002

1	Knife rotation switch
A	ON
B	OFF

6. Depress the traveling pedal to start cutting work.

Note:
During the work, the knives will rotate or stop in sync with the up and down motion of the mower units.

Transporting

Transporting Procedure

When loading the machine into a trailer or a truck to transport it, drive the machine forward.
When unloading, drive the machine in reverse.
If the roof is installed on the machine, remove it.
The roof may be damaged by wind pressure.

https://truckmanualshub.com/

Maintenance Precautions ..... Page 5-2

Maintenance Schedule ..... Page 5-3

Specified Values ..... Page 5-7

DPF ..... Page 5-8

About DPF ..... Page 5-8
Types of DPF Regeneration ..... Page 5-8
Conditions for DPF Regeneration ..... Page 5-9
DPF Regeneration Displays ..... Page 5-9
DPF Auto Regeneration ..... Page 5-10

Jacking up the machine ..... Page 5-14

About the Jacking up the machine ..... Page 5-14
Jack-up Points ..... Page 5-14

Greasing ..... Page 5-16

About Greasing ..... Page 5-16
Greasing Points ..... Page 5-16

Maintenance (Mower) ..... Page 5-20

Change of Rotary Knife ..... Page 5-20
Sharpening of Rotary Knife ..... Page 5-24
Balancing of Rotary Knife ..... Page 5-25

Maintenance (Main Body) ..... Page 5-26

Removing/Installing Tires ..... Page 5-26
Adjustment of Belt Tension ..... Page 5-27
Adjustment of Brake ..... Page 5-27
Adjusting the Neutral Position of the Piston Pump ..... Page 5-29
Change of Fuse ..... Page 5-30

Long-Term Storage ..... Page 5-30

Before Long-Term Storage ..... Page 5-30

https://truckmanualshub.com/

Maintenance

Maintenance Precautions

Caution

First, learn well the maintenance operations you plan to perform.

Caution

Use tools appropriate for each maintenance operation.

Caution

For the safe and best performance of your machine, use Baroness genuine parts for replacement and accessories.
Please note that our product warranty may be void if you use non-genuine parts for replacement or accessories.

https://truckmanualshub.com/

Maintenance Schedule

GM2810
Follow the maintenance schedule below.
○・・・Inspect, adjust, supply, clean
●・・・Replace (first time)
△・・・Replace

	Maintenance Item	Before Work	After Work	Every Week	Every 50 hrs.	Every 100 hrs.	Every 250 hrs.	Every 400 hrs.	Every 500 hrs.	Every 800 hrs.	Every 1000 hrs.	Every 1500 hrs.	Every 3000 hrs.	Every year	Every 2 years	Every 4 years	When Required	Remarks
*5	Check engine oil level and contamination	○																
*5	Check fuel level	○																
*5	Check coolant level	○																
*5	Check fan belt	○																
	Check hydraulic oil level	○																Refer to "Inspection of Hydraulic Oil"
	Check tire pressures and condition	○																Refer to "Inspection of Tires"
	Check rotary knife condition	○																Refer to "Inspection of Rotary Knife"
	Check roller condition	○																
	Check interlock system safety function	○																
	Check oil or water leaks	○																Refer to "Inspection of Oil Leakage"
	Check cover conditiion	○																
	Check damaged parts	○																
	Check tightening bolts and nuts	○																
	Check brake function	○																Refer to "Inspection of Brake"
	Check hydraulic hoses condition	○																
	Clean machine exterior		○															
	Clean engine area		○															
	Open air cleaner evacuator valve to remove dust		○	○														Open valve every week or daily in dusty conditions
	Clean radiator core		○															

https://truckmanualshub.com/

Maintenance

	Maintenance Item	Before Work	After Work	Every Week	Every 50 hrs.	Every 100 hrs.	Every 250 hrs.	Every 400 hrs.	Every 500 hrs.	Every 800 hrs.	Every 1000 hrs.	Every 1500 hrs.	Every 3000 hrs.	Every year	Every 2 years	Every 4 years	When Required	Remarks
	Clean oil cooler core		○															
*5	Check fuel hoses and clamp bands				○													
*5	Draining of water separator				○													Refer to "Draining of Water Separator"
	Grease and Lubricate all moving parts				○													Refer to "Greasing Points"
	Grease rear mower unit swing out pins				○													
	Check and Adjust brakes				○													
*5	Clean air cleaner outer element (Replace the element after 6-time cleaning)					○								△				Replace every 6 cleanings or every year whichever comes earlier Air cleaner should be cleaned more often in dusty conditions than in normal conditions
	Replace hydraulic oil					●			△									100 hours first change, every 500 hours thereafter
	Replace hydraulic oil filter					●			△									100 hours first change, every 500 hours thereafter
	Check battery fluid level					○								○				Check every 100 hours or every year whichever comes earlier Refer to "Inspection of Battery"
*5	Adjust fan belt tension					○												
*5	Check radiator hoses and clamp bands						○											

https://truckmanualshub.com/

Maintenance Item		Before Work	After Work	Every Week	Every 50 hrs.	Every 100 hrs.	Every 250 hrs.	Every 400 hrs.	Every 500 hrs.	Every 800 hrs.	Every 1000 hrs.	Every 1500 hrs.	Every 3000 hrs.	Every year	Every 2 years	Every 4 years	When Required	Remarks
*5	Check intake air line (air cleaner hose)						○							○				Check every 250 hours or every year whichever comes earlier
*5	Change engine oil				●			△						△				Initial 50 hours, thereafter every 400 hours or every year whichever comes earlier
*5	Replace oil filter cartridge				●			△						△				Initial 50 hours, thereafter every 400 hours or every year whichever comes earlier
*1	Replace fuel filter cartridge							△										
*5	Clean water separator								○									
*2.*5	Clean fuel tank interior								○									
*2.*5	Clean water jacket and radiator interior								○									
*2.*5	Replace fan belt								△						△			Replace every 500 hours or 2 years whichever comes earlier
	Replace hydraulic suction filter								△									
*2.*5	Check valve clearance									○								
*2.*3.*5	Check injector											○						
*2.*3.*5	Check EGR cooler											○						
*3.*5	Replace oil separator element											△						
*2.*3.*5	Check PCV (Positive Crankcase Ventilation) Valve in the oil separator body											○						
*2.*3.*5	Check turbocharger												○					
*2.*3.*4.*5	Replace DPF filters												△					

https://truckmanualshub.com/

Maintenance Item		Before Work	After Work	Every Week	Every 50 hrs.	Every 100 hrs.	Every 250 hrs.	Every 400 hrs.	Every 500 hrs.	Every 800 hrs.	Every 1000 hrs.	Every 1500 hrs.	Every 3000 hrs.	Every year	Every 2 years	Every 4 years	When Required	Remarks
*2.*3.*5	Check EGR system												○					
	Check electrical wiring condition (Damage, defacement and joint looseness)													○				
*2.*5	Replace air cleaner inner element													△				The secondary (inner) element should be removed only if it is to be replaced.
*2.*4.*5	Check DPF differential pressure pipes and hoses													○				
*2.*5	Check EGR piping													○				
*5	Check exhaust manifold (Crack, gas leakage and mounting screw)													○				
*2.*5	Replace oil separator rubber hose														△			
*2.*4.*5	Replace rubber hose of DPF differential pressure sensor														△			
*2.*5	Replace intake hose (After air flow sensor) and inter cooler hose														△			
*2.*5	Replace rubber hose of boost pressure sensor														△			
*2.*5	Replace EGR cooler hose														△			
*2.*5	Replace water hose														△			
*2.*5	Replace lubricant hose														△			
*5	Change radiator coolant (L.L.C.)														△			
*2.*5	Replace radiator hoses and clamp bands														△			
*1.*2.*5	Replace fuel hoses and clamps														△			
*2.*5	Replacement intake air line (air cleaner hose)														△			
	Replace hydraulic hoses (Moving part)														△			
	Replace hydraulic hoses (Fixed part)															△		
	Replace brake pads																△	

https://truckmanualshub.com/

Maintenance Item		Before Work	After Work	Every Week	Every 50 hrs.	Every 100 hrs.	Every 250 hrs.	Every 400 hrs.	Every 500 hrs.	Every 800 hrs.	Every 1000 hrs.	Every 1500 hrs.	Every 3000 hrs.	Every year	Every 2 years	Every 4 years	When Required	Remarks
	Replace brake cables																△	
	Sharpen and balance rotary knife																○	Sharpen/ Balance/ Replace rotary knife if needed.
	Replace battery																△	

- *1: When biodiesel fuel is used, change the fuel filter cartridge, fuel hose and clamp bands with new ones at intervals half of the usual ones.
- *2: Consult your local Baroness Dealer or local KUBOTA Dealer for this service.
- The items above (*3 marked) are registered as emission related critical parts by KUBOTA in the U.S. EPA nonroad emission regulation.
  As the engine owner, you are responsible for the performance of the required maintenance on the engine according to the above instruction.
  Please see the Engine's Warranty Statement in detail.
- The items listed above other than *3 marked are not necessary to keep the emission-related warranty valid.
- *4: Only for D1803-E4, V2403-E4, -TE4
- Failure to perform the maintenance will cause problems that will significantly degrade the engine performance.
- *5: Refer to the Engine's Owner's Manual.
- The values for consumables are not guaranteed.
- Replace the steering cylinder hoses every 2 years.

Specified Values

Fuel tank capacity	51.0 dm^3 (51.0 L)	Ultra-low sulfur diesel fuel (sulfur-free diesel fuel) or equivalent
Hydraulic tank capacity	44.0 dm^3 (44.0 L)	Shell Tellus S2M46 or equivalent
Quantity of engine oil	9.7 dm^3 (9.7 L)	JASO DH-2 or API Service Grade CJ-4
Coolant volume	12.0 dm^3 (12.0 L)	Including reserve tank (1.0 L)
Front Tire	150 kPa (1.5 kgf/cm^2)	29 × 14.00 - 15
Rear tire	140 kPa (1.4 kgf/cm^2)	20 × 12.00 - 10

https://truckmanualshub.com/

DPF

About DPF

Danger

Since it will become extremely hot around the exhaust outlet, do not perform DPF regeneration in a location where fires may occur.

The DPF is a purifying filter that collects PM (soot) from exhaust gas.
When a certain amount of PM (soot) has accumulated, DPF regeneration must be performed automatically or manually in order to restore the filtering function.

Types of DPF Regeneration

DPF regeneration is performed with any of the following four methods.

1. Auto regeneration

Important

This machine can continue to be operated during regeneration.

Raising the exhaust temperature is automatically controlled to perform DPF regeneration.
Regeneration can be performed by this machine.

2. Parked regeneration

Important

This machine cannot continue to be operated during regeneration.

If auto regeneration does not reduce the amount of accumulated PM below the specified value, park this machine in a safe location, and then forcibly perform DPF regeneration.
Regeneration can be performed by this machine.
This machine cannot continue to be operated during regeneration.

3. Manual regeneration

Important

Manual regeneration cannot be performed by the operator.
If manual regeneration is necessary, contact your dealer.

DPF regeneration is performed using a fault diagnostic tool.
Regeneration cannot be performed by this machine.
Perform manual regeneration under any of the following conditions.

- PM accumulation level 4 is reached.
- The DPF was replaced.
- The ECU was replaced.

4. Replacement of DPF

Important

If replacement of DPF is necessary, contact your dealer.

Replace DPF under any of the following conditions.

- Every 3,000 hrs
- PM accumulation level 5 is reached.

https://truckmanualshub.com/

Conditions for DPF Regeneration

Danger

Since it will become extremely hot around the exhaust outlet, do not perform DPF regeneration in a location where fires may occur.

Important

If DPF regeneration is canceled before it is completed, the next regeneration request may occur soon since not all of the PM (soot) was removed.

1. DPF auto regeneration does not begin unless both of the following two conditions are met.
   - The DPF auto regeneration inhibit switch is set to the "Regenerate" position.
   - The coolant temperature is 65 °C or more.
2. DPF parked regeneration and manual regeneration do not begin unless all of the following four conditions are met.
   - The parking brake is applied.
   - The traveling pedal is in the neutral position.
   - The throttle opening is 0% (idling).
   - The coolant temperature is 65 °C or more.
3. During DPF regeneration, the operation is canceled if any of the following conditions occur.
   - Any condition for starting regeneration is violated.
   - The ignition key is switched to the "OFF" position.

DPF Regeneration Displays

Danger

Since it will become extremely hot around the exhaust outlet, do not perform DPF regeneration in a location where fires may occur.

The following three icons indicate the DPF regeneration status.
The icon appears at the top of the monitor display.

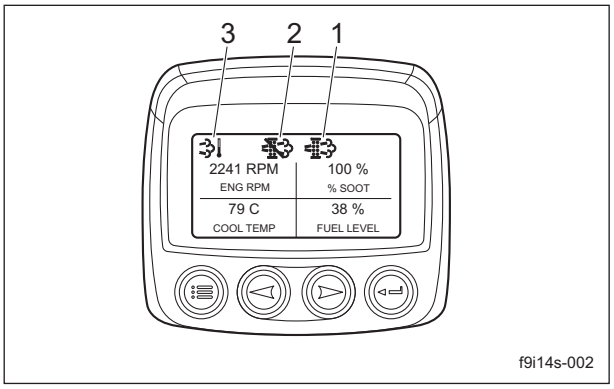

DPF Regeneration Displays_001

1	Regeneration icon
2	Auto regeneration inhibit icon
3	High exhaust temperature icon

1. Regeneration icon
   The regeneration icon appears with DPF regeneration request or during DPF regeneration.
   - DPF regeneration request: Blinking
   - During DPF regeneration: Lighting
2. Auto regeneration inhibit icon
   The auto regeneration inhibit icon lights up when the DPF auto regeneration inhibit switch is set to the "Auto regeneration inhibit" position.
3. High exhaust temperature icon
   The high exhaust temperature icon lights up when the exhaust temperature reaches 450 °C during DPF regeneration.

https://truckmanualshub.com/

DPF Auto Regeneration

Automatic Regeneration

Danger

Since it will become extremely hot around the exhaust outlet during DPF regeneration, do not perform the operation in a location where fires may occur.

Caution

Normally, set the DPF auto regeneration inhibit switch to the "Auto regeneration" position.
However, when operating in a location where fires may occur, set the DPF auto regeneration inhibit switch to the "Auto regeneration inhibit" position.

When the DPF auto regeneration inhibit switch is set to the "Auto regeneration" position, perform regeneration as described below, according to the PM accumulation level.

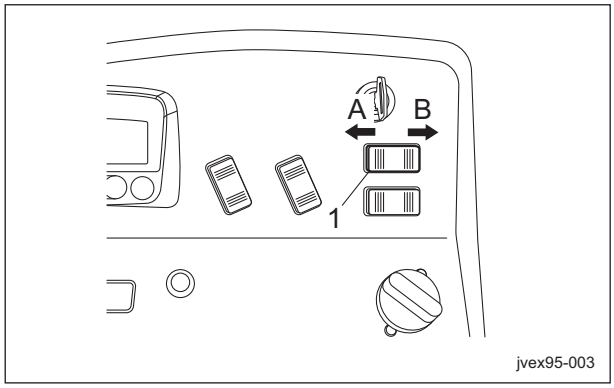

Automatic Regeneration_001

1	DPF auto regeneration inhibit switch
A	Auto regeneration
B	Auto regeneration inhibit

1. Level 0
   Regeneration is not necessary.
2. Level 1

Important

The machine can continue to be operated.

If the conditions for auto regeneration are met, auto regeneration begins and the regeneration icon lights up.
However, if regeneration remains uncompleted even after 30 minutes have passed, the system enters level 2.

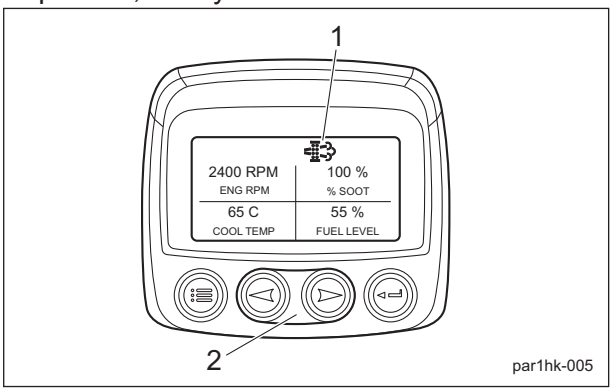

Automatic Regeneration_002

1	Regeneration icon
2	Arrow keys

3. Level 2

Important

The machine can continue to be operated.
However, during the parked regeneration, the machine cannot be operated.

Auto regeneration continues and the parked regeneration can also be started in level 2.
If regeneration remains uncompleted by means of auto regeneration, the regeneration icon begins blinking to request the parked regeneration.
Follow the steps below to perform the parked regeneration.

[1] Stop machine operations, park in a safe location, and then apply the parking brake.
[2] Set the throttle opening to 0% (idling).
[3] Set the DPF parked regeneration switch to the "Engaged" position.
Regeneration starts.

https://truckmanualshub.com/

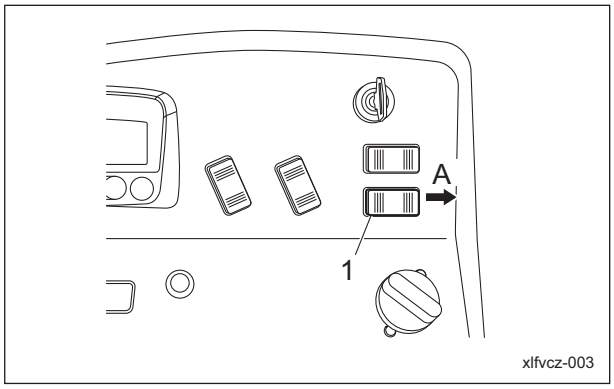

Automatic Regeneration_003

1	DPF parked regeneration switch
A	Engaged

If the parked regeneration request is ignored and the machine continues to be operated, the system enters level 3.

4. Level 3

> **Important**
>
> The machine cannot continue to be operated.

The auto regeneration cannot be implemented in level 3. Therefore, the parked regeneration must be started immediately.
The following occur in level 3.

- "Excessive PM3" appears in the monitor display. Pressing an arrow key changes the display to "CORRECTIVE ACTION: Start DPF Parked Regeneration immediately".
- The LED (yellow) lights up.
- The engine output is limited at 50%.

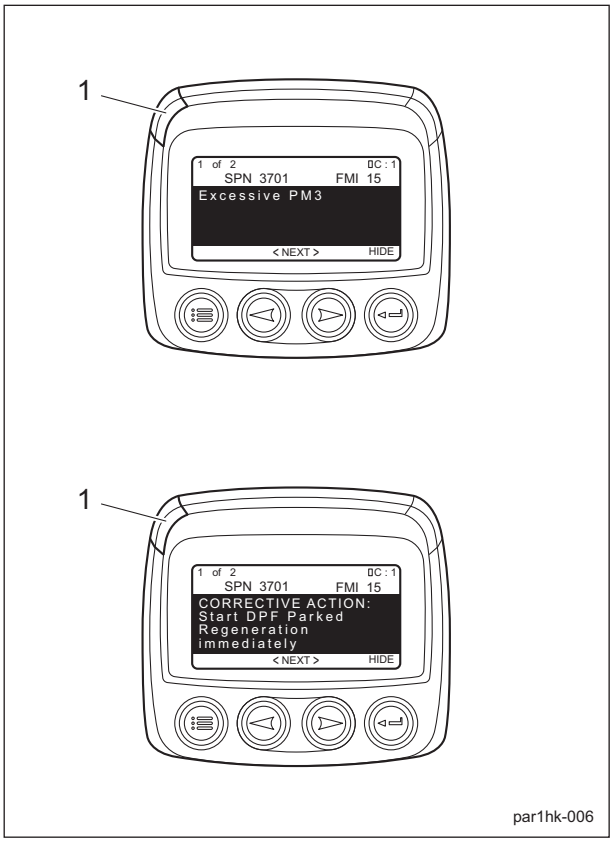

Automatic Regeneration_004

1	LED (yellow)

If the parked regeneration request is ignored and the machine continues to be operated, the system enters level 4.

5. Level 4

> **Important**
>
> Manual regeneration cannot be performed by the operator.
> If manual regeneration is necessary, contact your dealer.

The following occur in level 4. Manual regeneration by your dealer must be performed with a fault diagnostic tool.

- "Excessive PM4" appears in the monitor display. Pressing an arrow key changes the display to "CORRECTIVE ACTION: Stop engine!! Contact dealer immediately".
- The LED (yellow) lights up.
- The engine output is limited at 50%.

https://truckmanualshub.com/

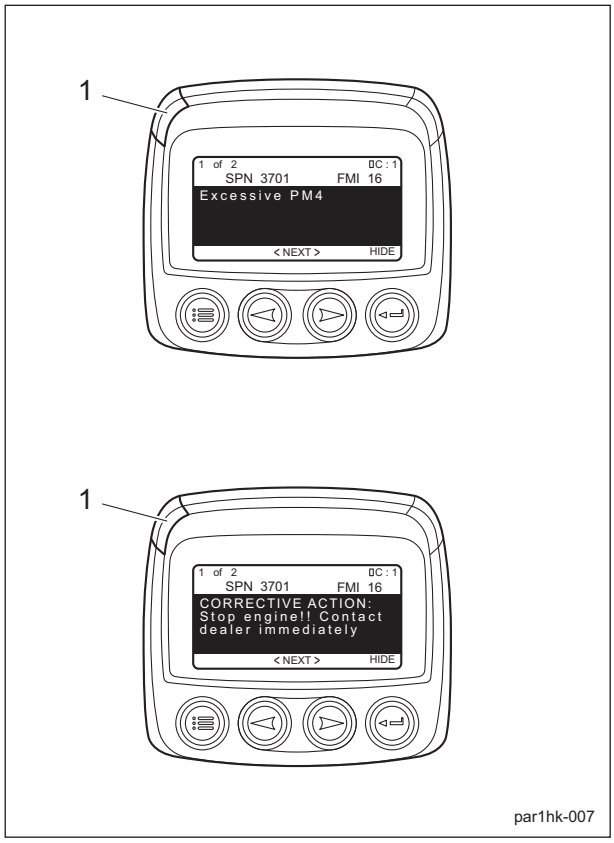

Automatic Regeneration_005

1	LED (yellow)

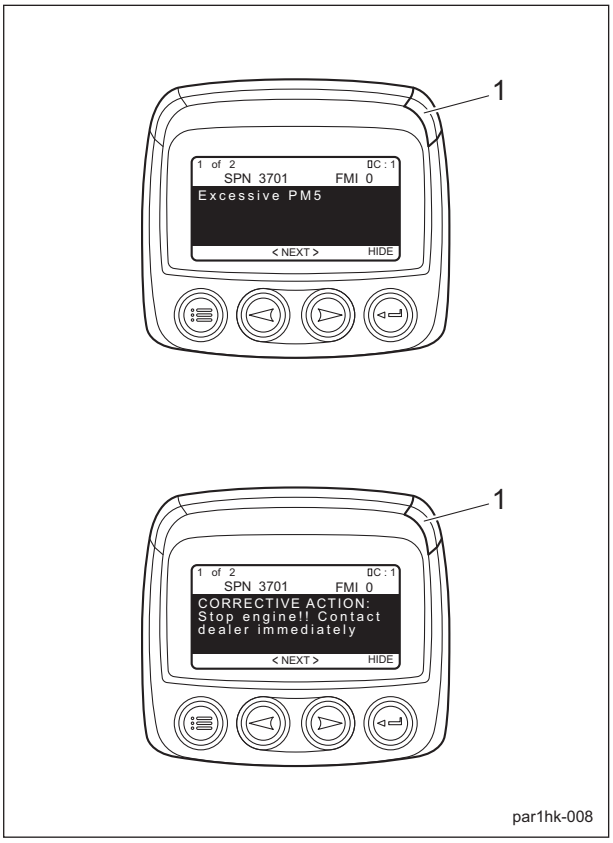

Automatic Regeneration_006

1	LED (red)

If the manual regeneration request is ignored and the machine continues to be operated, the system enters level 5.

6. Level 5

Important

When the system enters level 5, the DPF is completely clogged.
Replacement of DPF is necessary.
Contact your dealer.

The following occur in level 5. Replacement of DPF is required.

- "Excessive PM5" appears in the monitor display. Pressing an arrow key changes the display to "CORRECTIVE ACTION: Stop engine!! Contact dealer immediately".
- The LED (red) lights up.
- The engine output is limited at 50%.

Auto Regeneration Inhibition

Danger

Since it will become extremely hot around the exhaust outlet, do not perform DPF regeneration in a location where fires may occur.

Caution

Normally, set the DPF auto regeneration inhibit switch to the "Auto regeneration" position.
However, when operating in a location where fires may occur, set the DPF auto regeneration inhibit switch to the "Auto regeneration inhibit" position.

When the DPF auto regeneration inhibit switch is set to the "Auto regeneration inhibit" position, the auto regeneration inhibit icon appears in the monitor display.

https://truckmanualshub.com/

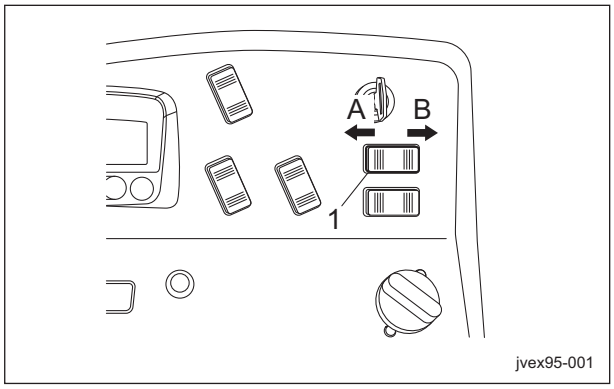

Auto Regeneration Inhibition_001

1	DPF auto regeneration inhibit switch
A	Auto regeneration
B	Auto regeneration inhibit

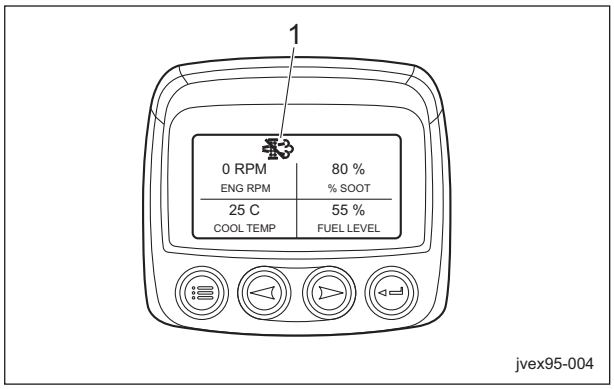

Auto Regeneration Inhibition_002

1	Auto regeneration inhibit icon

When the DPF auto regeneration inhibit switch is set to the "Auto regeneration inhibit" position, perform regeneration as described below according to the PM accumulation level.

1. Level 0
   Regeneration is not necessary.
2. Level 1

Important

The machine can continue to be operated.

The regeneration icon blinks.
When the DPF auto regeneration inhibit switch is set to the "Auto regeneration" position, regeneration begins.

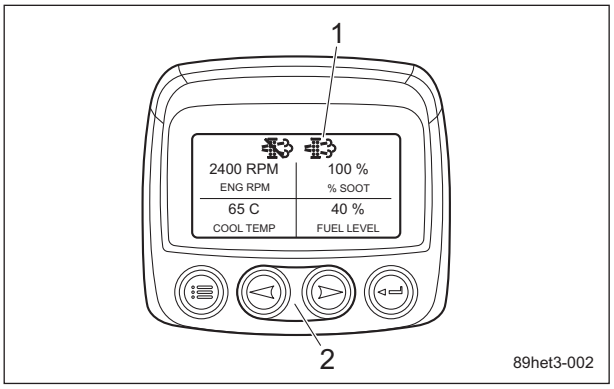

Auto Regeneration Inhibition_003

1	Regeneration icon
2	Arrow keys

If the regeneration request is ignored and the machine continues to be operated, the system enters level 2.

3. Level 2

Important

The machine cannot be operated during the parked regeneration.

When the system enters level 2, perform the parked regeneration.
Follow the steps below to perform the parked regeneration.

[1] Stop machine operations, park in a safe location, and then apply the parking brake.
[2] Set the throttle opening to 0% (idling).
[3] Set the DPF parked regeneration switch to the "Engaged" position.
Regeneration starts.

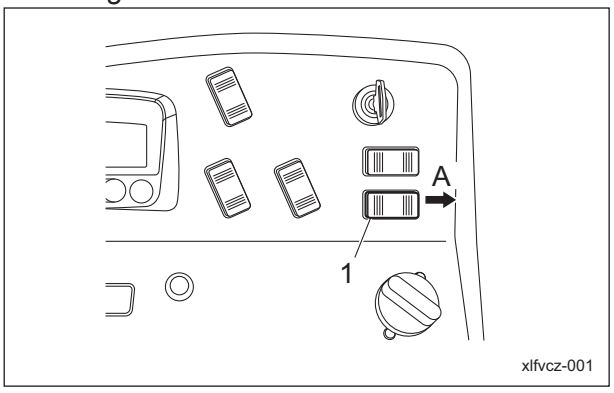

Auto Regeneration Inhibition_004

1	DPF parked regeneration switch
A	Engaged

https://truckmanualshub.com/

Levels 3, 4 and 5 are the same as if the DPF auto regeneration inhibit switch is set to the "Auto regeneration" position.
Refer to "Automatic Regeneration".

Jacking up the machine

About the Jacking up the machine

Warning

When replacing a tire or beginning any other maintenance or repairs, be sure to chock the wheels to prevent the machine from moving.
Before jacking up the machine, park it on a hard, flat surface such as a concrete floor and remove any obstacles that could prevent you from performing the work safely.
When necessary, use an appropriate chain block, hoist, or jack.
Support the machine securely with jack stands or appropriate blocks.
Failure to do so may cause the machine to move or fall, resulting in injury or death.

Use the jack-up points identified in this manual when jacking up the machine.
Only place a jack under the jack-up points specified.
Placing a jack at any other point could result in damage to the frame or other parts.

Jack-up Points

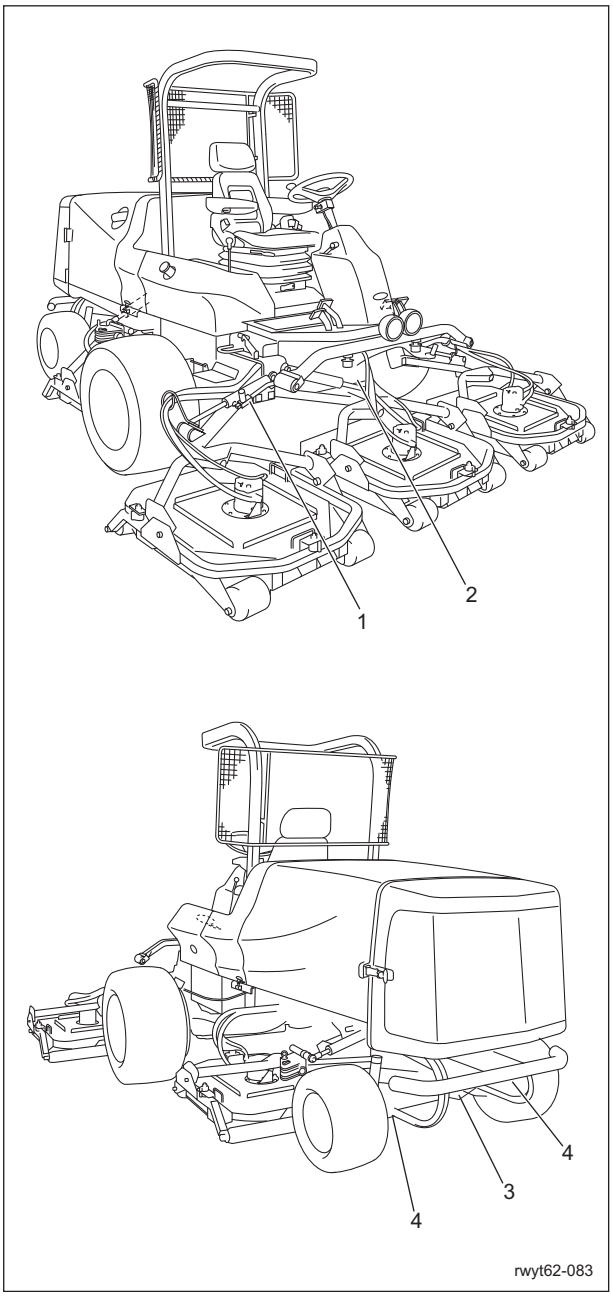

Jack-up Points_001

	Jack-up points
1	Front right frame
2	Front left frame
3	Center of pivot
4	Below rear wheel motors

https://truckmanualshub.com/

1. Front right frame

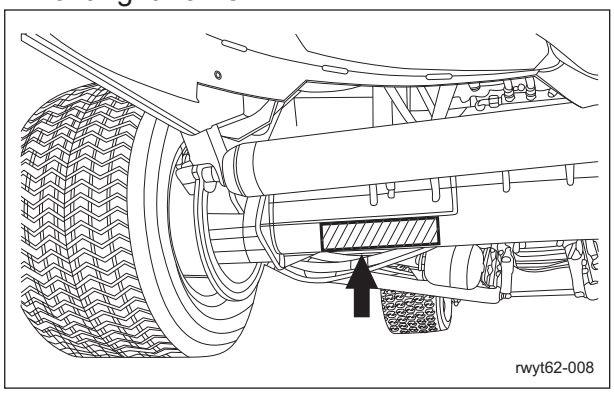

Jack-up Points_002

2. Front left frame

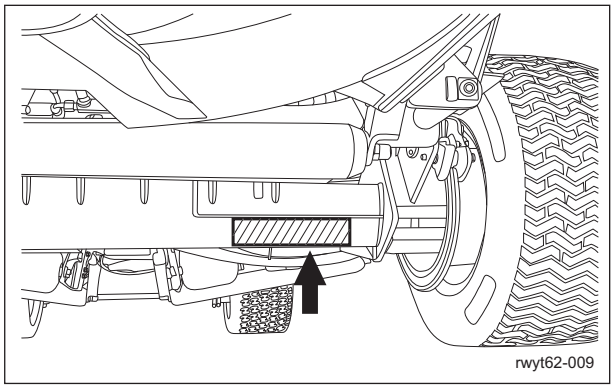

Jack-up Points_003

3. Center of pivot

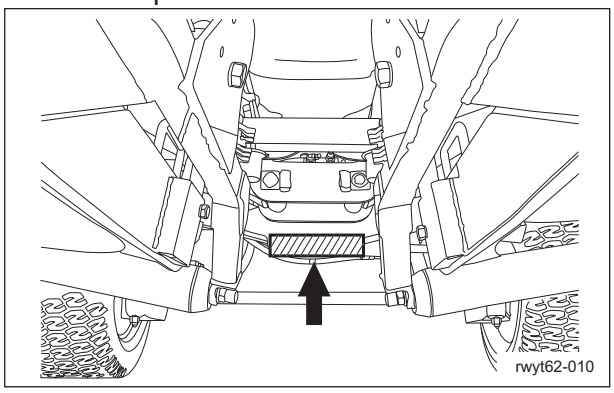

Jack-up Points_004

4. Below rear wheel motors
   Two locations

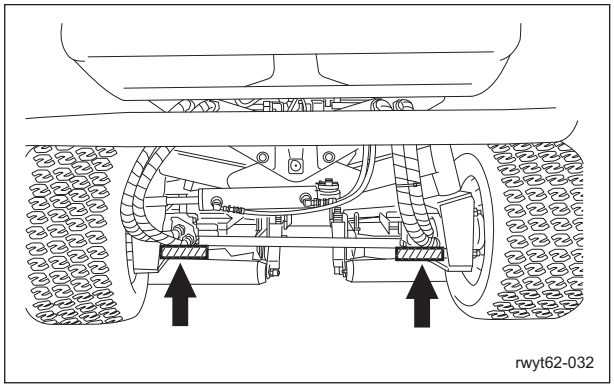

Jack-up Points_005

https://truckmanualshub.com/

Greasing

About Greasing

Since there may be adhesion or damage due to lack of grease on moving parts, they must be greased.
Add urea-based No. 2 grease in accordance with the Maintenance Schedule.
Other locations where the specified grease or lubricant is used are indicated in "Greasing Points".
Add grease using the specified grease or lubricant.

Greasing Points

Grease nipples are installed in the following locations.
Add grease every 50 hours of operation.

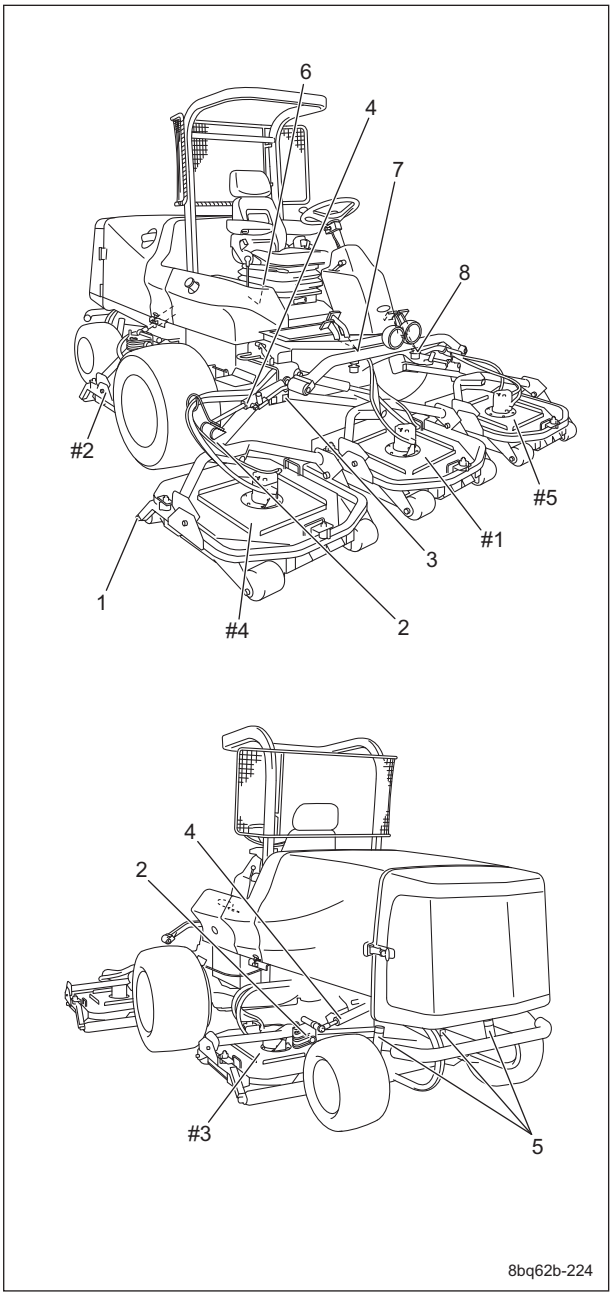

Greasing Points_001

	Portion	No. of Greasing Points
1	Rear roller	10
2	Mower arm fulcrum	5
3	Lift arm fulcrum	5
4	Lift arm cylinder fulcrum	12
5	Pivot	3
6	Neutral position area	2
7	Traveling pedal shaft fulcrum	2
8	Foot brake	3

https://truckmanualshub.com/

1. Rear roller
   There is one greasing point each on the left and right of each mower unit.

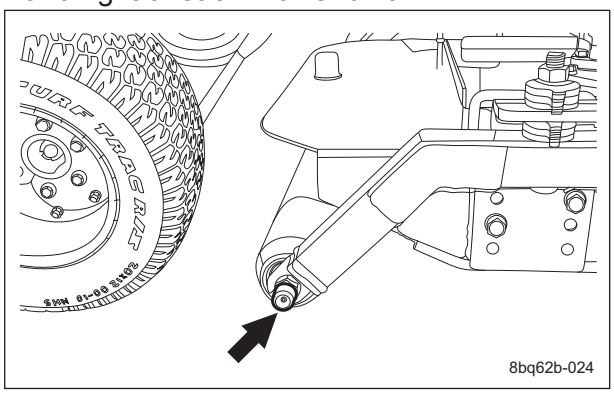

Greasing Points_002

2. Mower arm fulcrum
   There is one greasing point on the arm connected to each mower unit.
   Grease mower units #2 and #3 in the swiveled position.

   Mower units #1, #4 and #5

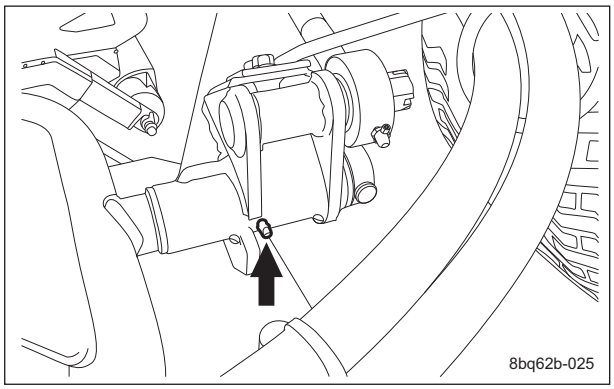

Greasing Points_003

   Mower units #2 and #3

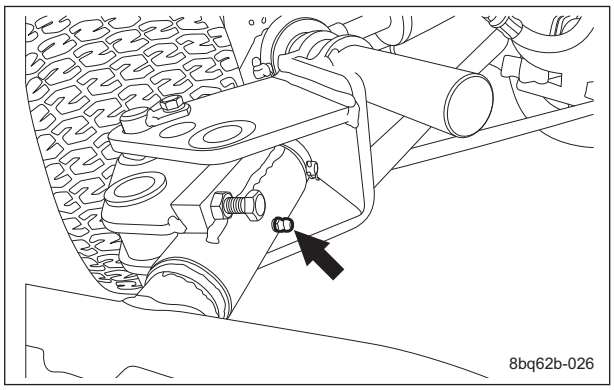

Greasing Points_004

3. Lift arm fulcrum
   There is one greasing point on the arm connected to each mower unit.
   Lower the mower units before greasing the lift arm fulcrums.

   Mower units #1 and #4

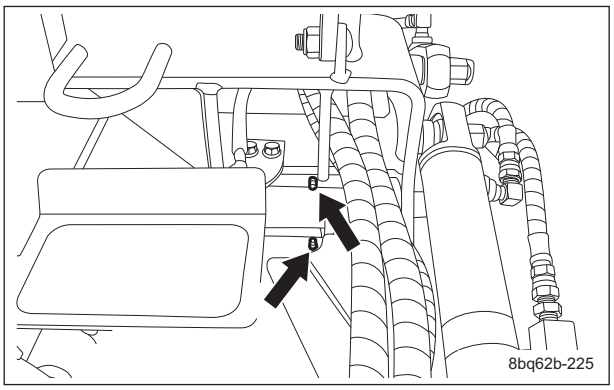

Greasing Points_005

   Mower units #2 and #3

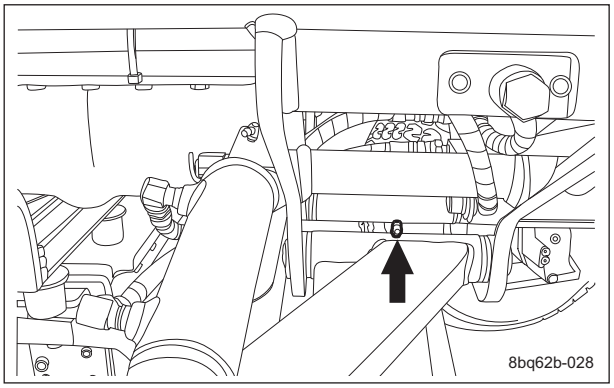

Greasing Points_006

   Mower unit #5

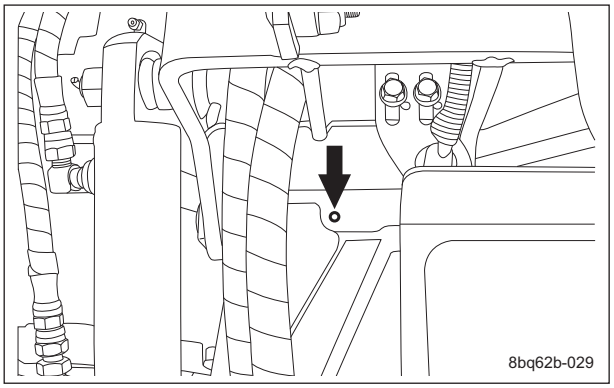

Greasing Points_007

https://truckmanualshub.com/

4. Lift arm cylinder fulcrum
   This is on each cylinder of the arms connected to each mower unit.
   Mower units #1, #4 and #5
   There are two greasing points on each cylinder.

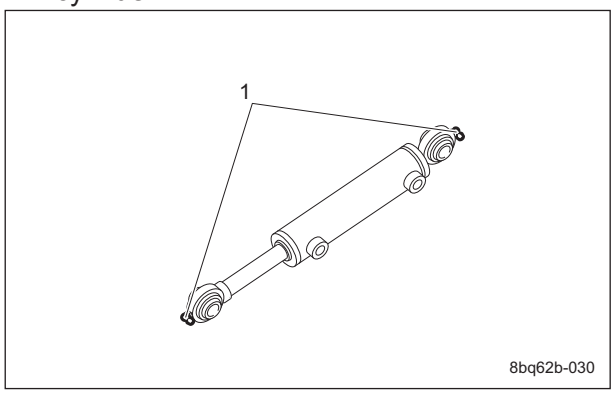

Greasing Points_008

1	Grease nipple (2 locations)

   Mower units #2 and #3
   There are three greasing points on each cylinder.

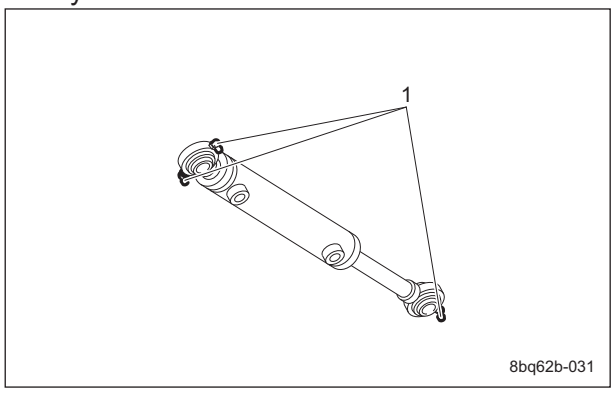

Greasing Points_009

1	Grease nipple (3 locations)

5. Pivot
   Middle between the rear wheels

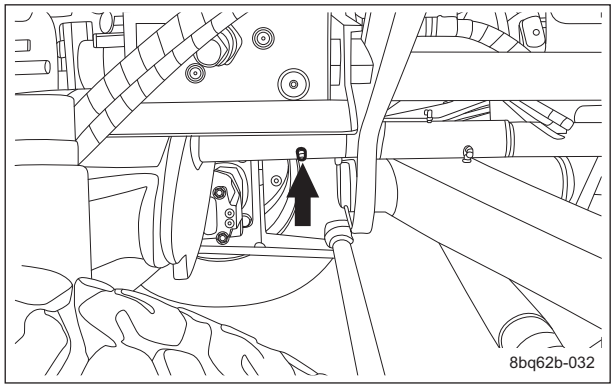

Greasing Points_010

   Rear left wheel

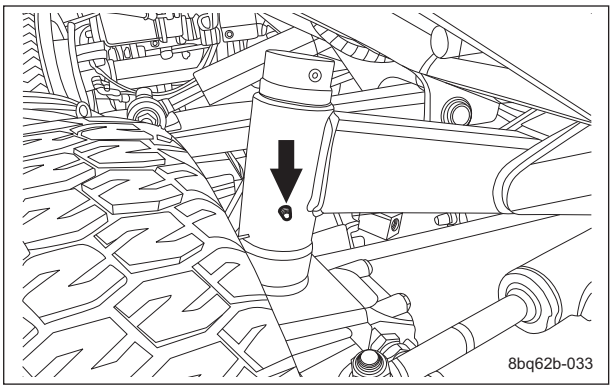

Greasing Points_011

   Rear right wheel

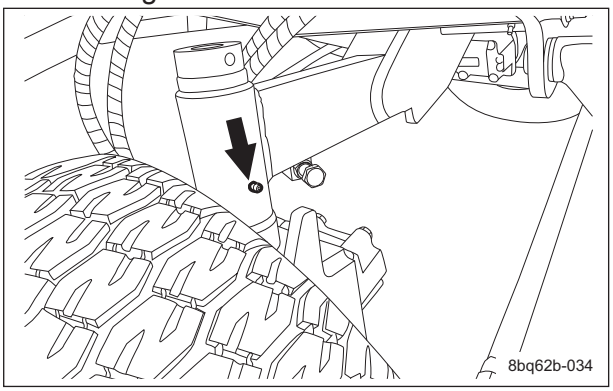

Greasing Points_012

6. Neutral position area
   There are two locations.

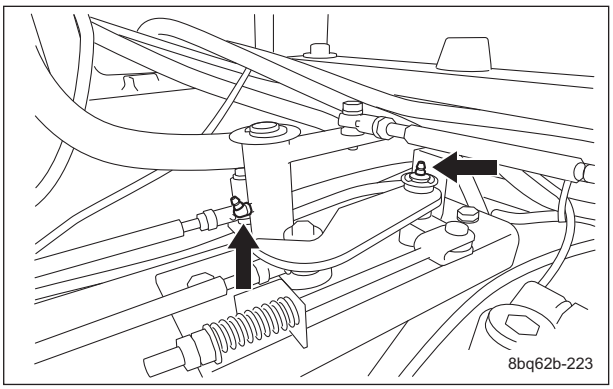

Greasing Points_013

https://truckmanualshub.com/

7. Traveling pedal shaft fulcrum
   There are two locations.

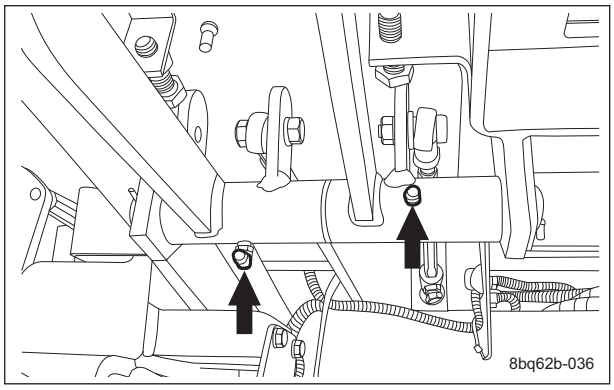

Greasing Points_014

8. Foot brake
   There are three locations.

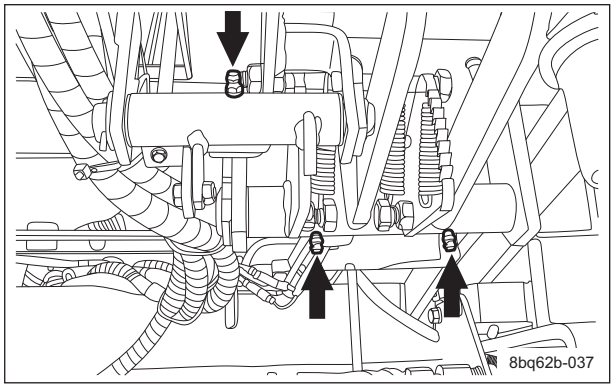

Greasing Points_015

https://truckmanualshub.com/

Maintenance (Mower)

Change of Rotary Knife

Danger

The rotary knife is an edged tool.
Take extra care in handling since they could cut your hands or legs.

Danger

If the rotary knife becomes worn or damaged, a crack or tear between the sail and flat part will result.
Take extra care since a broken piece of the rotary knife may fly off while it is rotating.

Caution

When touching edged tools, wear gloves, since they could cut your hands.

Caution

The rotary knife has a specific installation direction.
Do not install it facing the wrong direction.

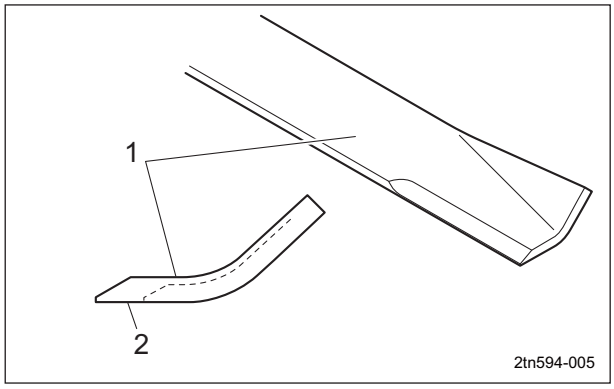

Change of Rotary Knife_001

1	Rotary knife top side
2	Rotary knife bottom side

Important

Before installing the rotary knife, make sure that it is balanced.

If the edge of the rotary knife becomes chipped or thin, replace it with a new one.
The criteria for replacing the rotary knife are described below.

1. When the narrowest part of the rotary knife has a width of less than 2/3 of the width of a new knife

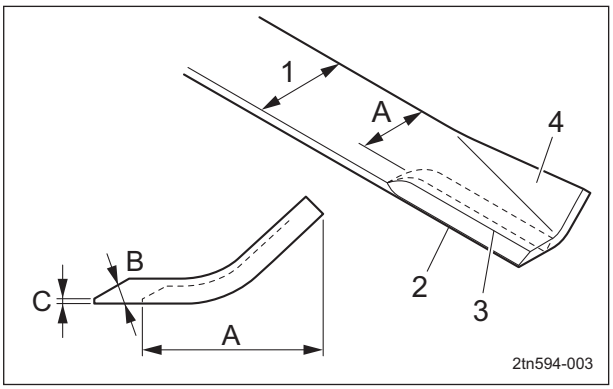

Change of Rotary Knife_002

1	Total width
2	Blade edge
3	Blade base
4	Sail
A	less than 2/3
B	30 - 40°
C	0.5 - 1.0 mm

2. When the thinnest part of the rotary knife has a thickness of less than 1/3 of the thickness of a new knife

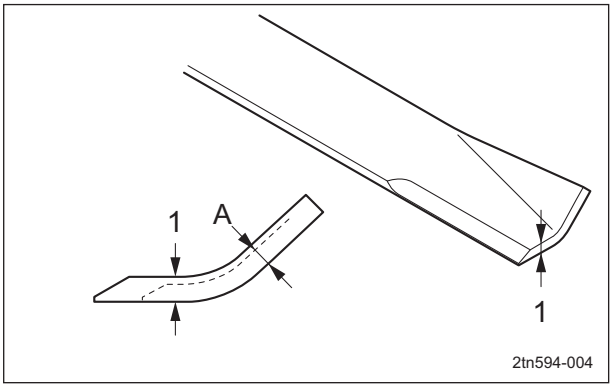

Change of Rotary Knife_003

1	Thickness
A	less than 1/3

Mower unit #1

1. Start the engine, and then raise the mower units.
2. Stop the engine, and then remove the key.

https://truckmanualshub.com/

3. Lift the mower unit at the front.

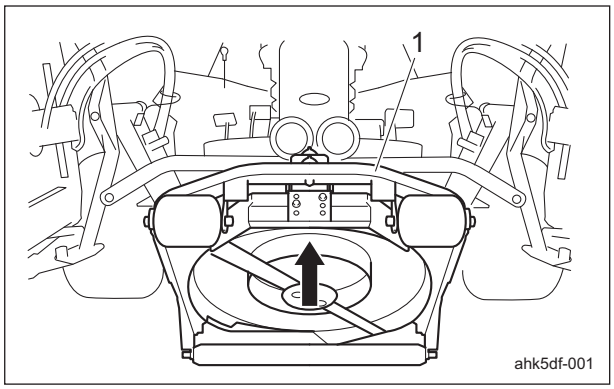

Mower unit #1_001

1	Mower unit

4. Remove the cotter pin and hardened roundhead pin inserted at a, and then insert them at b.

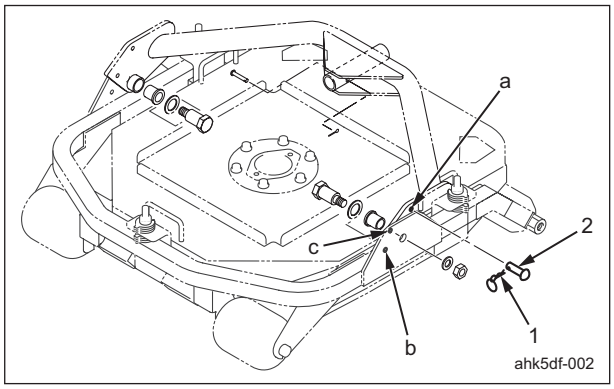

Mower unit #1_002

1	Cotter pin
2	Hardened roundhead pin

5. Follow the steps below to remove the rotary knife.
   [1] Use the square pipe from the included tools to secure the rotary knife so that it does not turn.
   [2] Remove the two bolts, spring washers and washers used to install the rotary knife.
   [3] Remove the knife guide.
   [4] Remove the rotary knife.

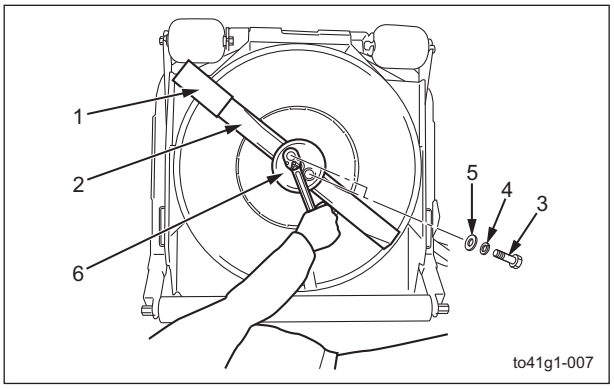

Mower unit #1_003

1	Square pipe
2	Rotary knife
3	Bolt
4	Spring washer
5	Washer
6	Knife guide

Important

The tightening torque for the knife mounting bolt is 67 - 85 N-m (683.20 - 866.75 kgf-cm).

6. Install the rotary knife.
   For installing the rotary knife, reverse the removing procedure.

Mower Units #2/#3

1. Remove the clip pin installed on the mower arm, and then pull out the grip pin.

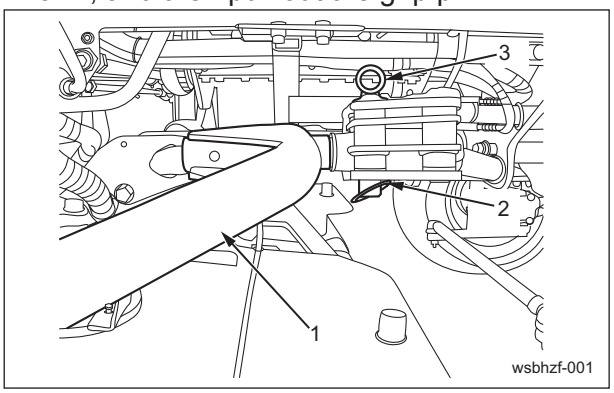

Mower Units #2/#3_001

1	Mower arm
2	Clip pin
3	Grip pin

https://truckmanualshub.com/

2. Pull out the mower unit.

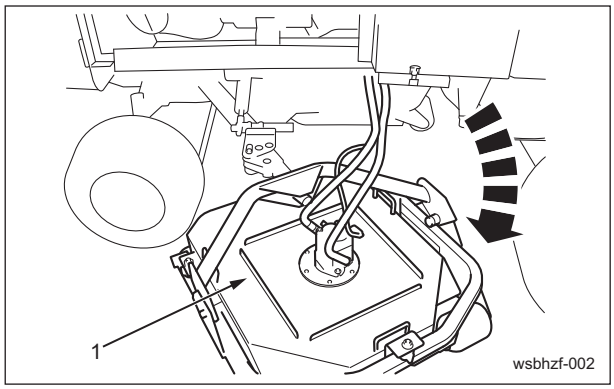

Mower Units #2/#3_002

1	Mower unit

3. Install the grip pin and clip pin in the mounting hole for maintenance.

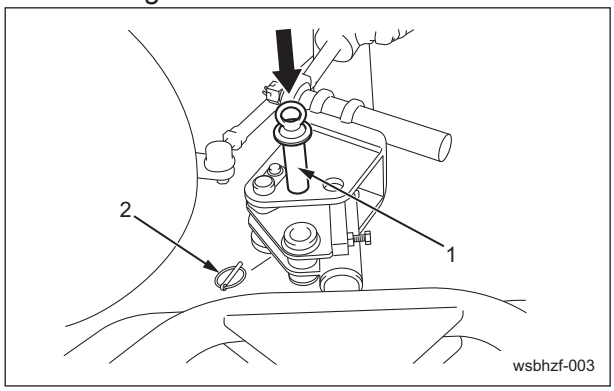

Mower Units #2/#3_003

1	Grip pin
2	Clip pin

4. Start the engine, and then raise the mower units.
5. Stop the engine, and then remove the key.
6. Lift the mower unit at the front.

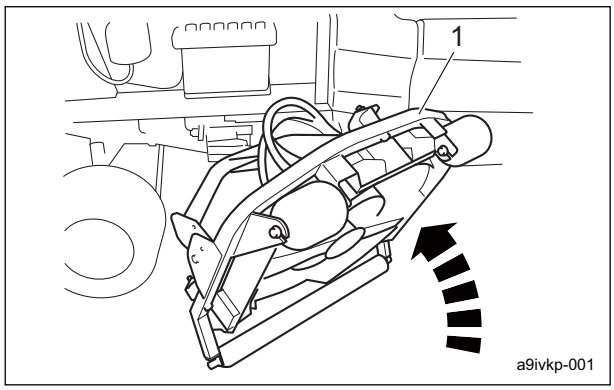

Mower Units #2/#3_004

1	Mower unit

7. Remove the cotter pin and hardened roundhead pin inserted at a, and then insert them at b.

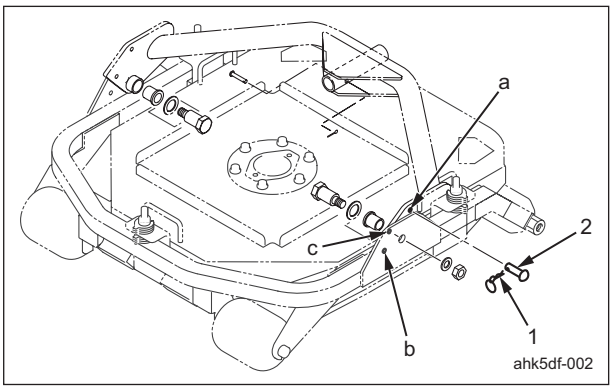

Mower Units #2/#3_005

1	Cotter pin
2	Hardened roundhead pin

8. Follow the steps below to remove the rotary knife.
   [1] Use the square pipe from the included tools to secure the rotary knife so that it does not turn.
   [2] Remove the two bolts, spring washers and washers used to install the rotary knife.
   [3] Remove the knife guide.
   [4] Remove the rotary knife.

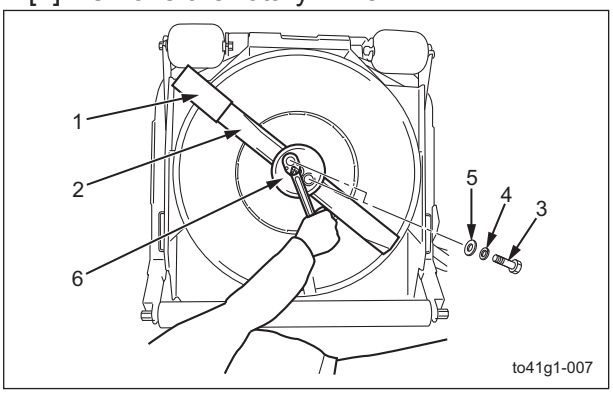

Mower Units #2/#3_006

1	Square pipe
2	Rotary knife
3	Bolt
4	Spring washer
5	Washer
6	Knife guide

https://truckmanualshub.com/

Important

The tightening torque for the knife mounting bolt is 67 - 85 N-m (683.20 - 866.75 kgf-cm).

9. Install the rotary knife.
   For installing the rotary knife, reverse the removing procedure.

Mower Units #4/#5

1. Start the engine, and then raise the mower units.

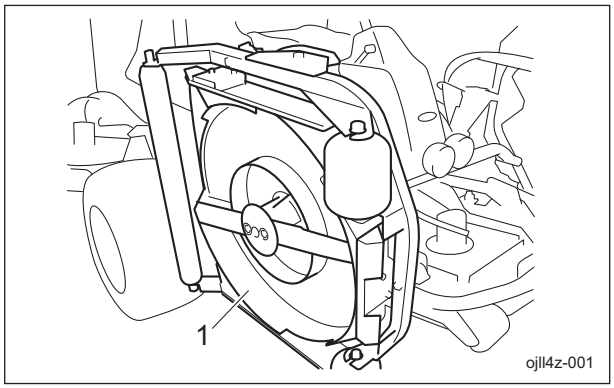

Mower Units #4/#5_001

1	Mower unit

2. Stop the engine, and then remove the key.
3. Remove the cotter pin and hardened roundhead pin inserted at a, and then insert them at c.

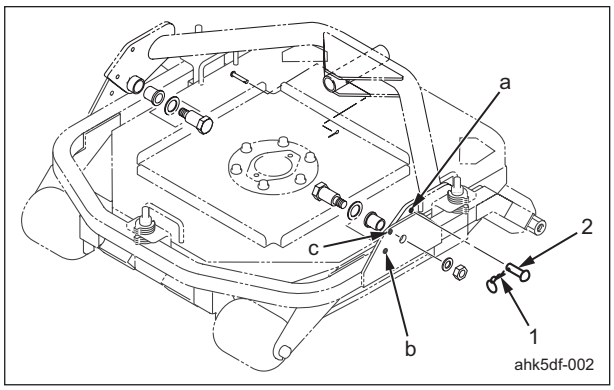

Mower Units #4/#5_002

1	Cotter pin
2	Hardened roundhead pin

4. Follow the steps below to remove the rotary knife.
   [1] Use the square pipe from the included tools to secure the rotary knife so that it does not turn.
   [2] Remove the two bolts, spring washers and washers used to install the rotary knife.
   [3] Remove the knife guide.
   [4] Remove the rotary knife.

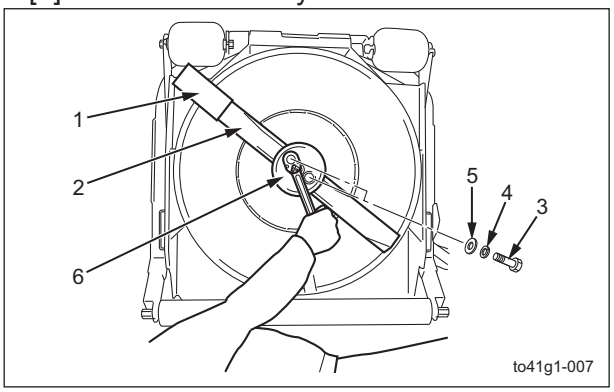

Mower Units #4/#5_003

1	Square pipe
2	Rotary knife
3	Bolt
4	Spring washer
5	Washer
6	Knife guide

Important

The tightening torque for the knife mounting bolt is 67 - 85 N-m (683.20 - 866.75 kgf-cm).

5. Install the rotary knife.
   For installing the rotary knife, reverse the removing procedure.

https://truckmanualshub.com/

Sharpening of Rotary Knife

Danger

The rotary knife is an edged tool.
Handle it carefully, since it could cut your hands or legs.

Danger

If the rotary knife becomes worn or damaged, a crack or tear between the sail and flat part will result.
Since a piece of the rotary knife may break and fly off while it is rotating, be extremely careful.

Warning

Using an imbalanced rotary knife may cause vibrations, resulting in damage to the machine.

Caution

Wear gloves when touching edged tools to avoid cutting your hands.

Caution

When sharpening the rotary knife, be sure to wear safety glasses and gloves.

When the edge of the rotary knife becomes rounded and no longer cuts well, sharpen the rotary knife by grinding the worn cutting edge with a grinder or sander.
If the edge of the rotary knife becomes chipped or thin, replace it with a new one.
The criteria for sharpening the rotary knife is described below.

1. When, after grinding, the width of the rotary knife to the blade edge is 2/3 or more of the total width of a new knife
2. When, after grinding, the blade base of the rotary knife does not reach the sail

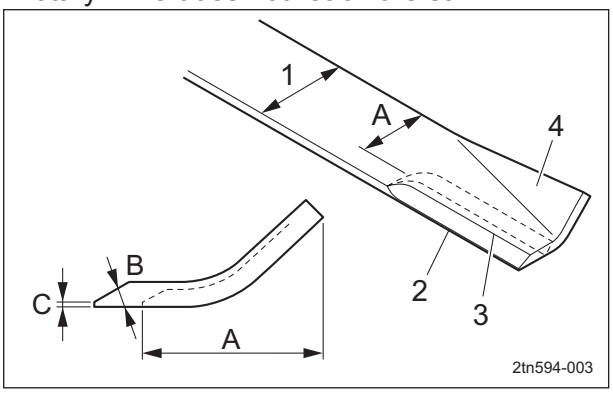

Sharpening of Rotary Knife_001

1	Total width
2	Blade edge
3	Blade base
4	Sail
A	2/3 or more
B	30 - 40°
C	0.5 - 1.0 mm

3. When the thinnest part of the rotary knife has a thickness of 1/3 or more of the thickness of a new knife

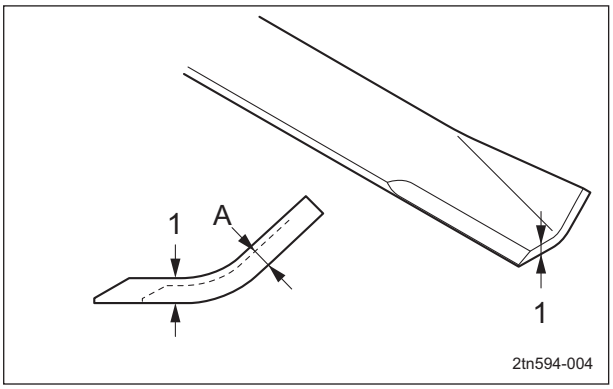

Sharpening of Rotary Knife_002

1	Thickness
A	1/3 or more

https://truckmanualshub.com/

Follow the steps below to grind the rotary knife.

1. Remove the rotary knife from the machine.
   "Change of Rotary Knife" (Page 5-20)

Important

Grind only the top surface of the edge, and be sure to maintain the original angle.
By equally grinding the left and right ends of the rotary knife, it can be sharpened without becoming imbalanced.

2. Grind the cutting edge of the rotary knife.
   Grind so that the edge angle is 30 - 40 degrees, the point thickness is 0.5 - 1.0 mm, and the blade base does not reach the sail.

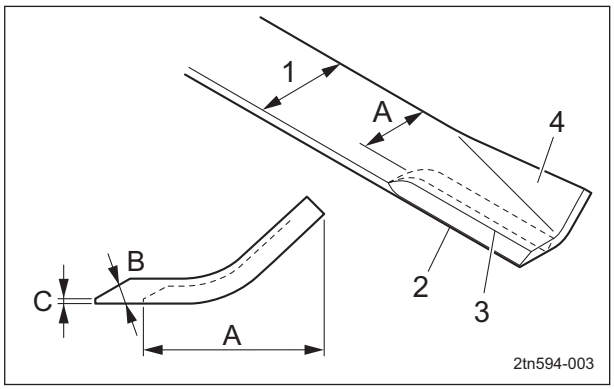

Sharpening of Rotary Knife_003

1	Total width
2	Blade edge
3	Blade base
4	Sail
A	2/3 or more
B	30 - 40°
C	0.5 - 1.0 mm

3. Balance the rotary knife.
   "Balancing of Rotary Knife" (Page 5-25)
4. If it is not balanced, repeat steps 2. - 3.

Note:
The original machine is equipped with rotary knives with total width of 65mm and thickness of 6mm.

Balancing of Rotary Knife

Danger

The rotary knife is an edged tool.
Take extra care in handling since they could cut your hands or legs.

Danger

Using an imbalanced rotary knife may cause vibrations, resulting in damage to the machine.

Caution

When touching edged tools, wear gloves, since they could cut your hands.

When the rotary knife is worn asymmetrically, causing vibrations, or when it becomes dull or worn, remove the rotary knife from the machine and balance it.
Follow the steps below to balance the rotary knife.

1. Remove the rotary knife from the machine.
   "Change of Rotary Knife" (Page 5-20)
2. Install the balancer equipment in an appropriate location.
3. Fit the hole at the center of the rotary knife onto the balancer equipment, and then balance the left and right ends so that the rotary knife is level.

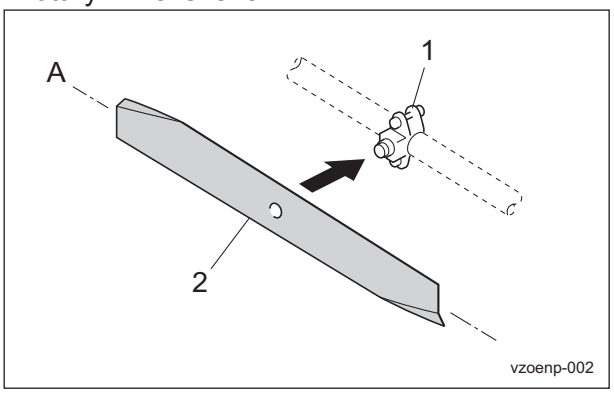

Balancing of Rotary Knife_001

1	Balancer equipment
2	Rotary knife
A	Level

https://truckmanualshub.com/

Maintenance (Main Body)

Removing/Installing Tires

Front Tires

Follow the steps below to remove the front tires:

1. Loosen the bolts.

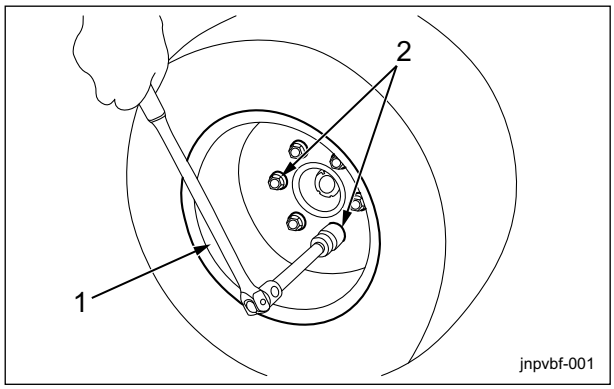

Front Tires_001

1	Front tire
2	Heat-treated bolt

2. Securely place the jack beneath the jack-up point of the front left/right frame area, and then raise it until the tire lifts off the ground. "Jack-up Points" (Page 5-14)
3. Remove the bolts.
4. Remove the tire from the wheel mounting seat.

Caution

Refer to the Tightening Torque table.
Note that the Baroness product warranty may not apply to defects caused by incorrect or overtorque tightening etc.

Important

Tighten the bolts in the tightening order (crosswise).

For installing the front tires, reverse the removing procedure.

Rear Tire

Follow the steps below to remove the rear tire.

1. Loosen the bolts.

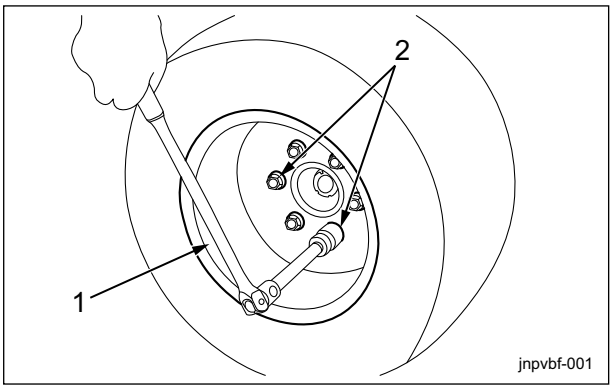

Rear Tire_001

1	Rear tire
2	Heat-treated bolt

2. Securely place the jack beneath the jack-up point below the rear wheel motor, and then raise it until the tire lifts off the ground. "Jack-up Points" (Page 5-14)
3. Remove the bolts.
4. Remove the tire from the wheel mounting base.

Caution

Refer to the Tightening Torque table.
Note that the Baroness product warranty may not apply to defects caused by incorrect or overtorque tightening, etc.

Important

Tighten the bolts in the tightening order (diagonally).

For installing the rear tire, reverse the removing procedure.

https://truckmanualshub.com/

Adjustment of Belt Tension

Caution

Be sure to stop the engine before adjusting the belts.

Important

Make sure that the belt has the specified amount of tension.
Before making sure of its specified tension, rotate the belt several times.

If the belt becomes slack due to frequent use, it may jump or slip.
In addition, if it is overtightened, it may wear prematurely.
If necessary, adjust it, and always check the belt for appropriate tension.

Fan Belt

Caution

Be sure to stop the engine before adjusting the belts.

For details on handling the engine, please refer to the Engine's Owner's Manual.

1. Press the middle of the belt with your finger to check the belt tension.
2. If the belt is too slack, loosen bolts A and B (that affix the alternator), and then move the alternator to adjust the tension.

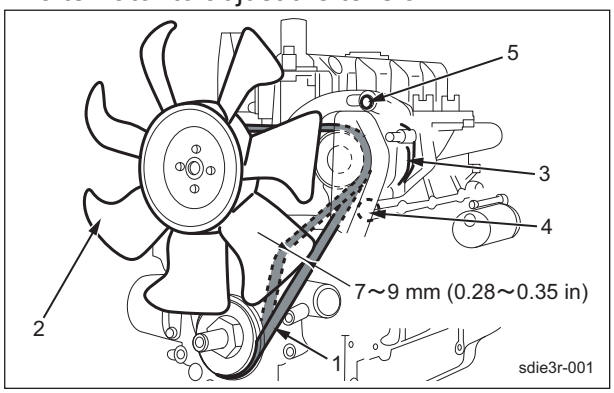

Fan Belt_001

1	Fan belt
2	Blade
3	Alternator
4	Bolt A
5	Bolt B

Adjustment of Brake

Danger

Make sure that the brake wire is not cracked or damaged.

Important

If the brake is not sufficiently effective due to a larger clearance between the brake disc and the pad, adjust the clearance.
The wire is used for fine adjustments.

Important

Adjust the brake with the brake pads.

The brake pad wear limit is 3.0 mm (0.12 in).

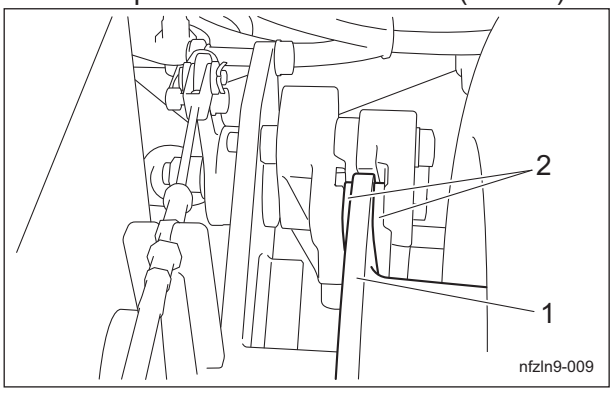

Adjustment of Brake_001

1	Brake disc
2	Brake pad

Caution

Make sure that the lever is maintained in the open position (neutral).

1. For each wheel, fully tighten the adjustment bolt on the brake disc side.

https://truckmanualshub.com/

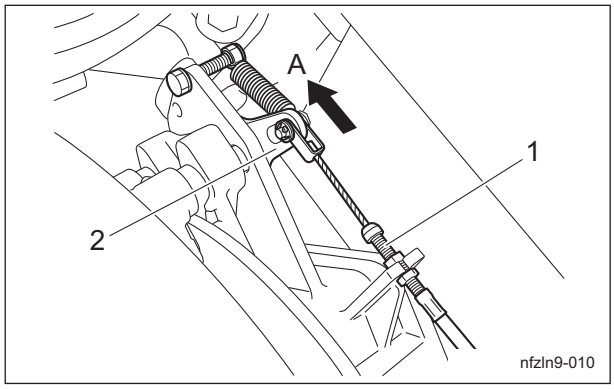

Adjustment of Brake_002

1	Adjustment bolt (on brake disc side)
2	Lever
A	Open (neutral)

2. Reduce the clearance by loosening the lock nut, then tightening the adjustment nut. Tighten the adjustment nut until the friction material contacts the friction surface of the disc.

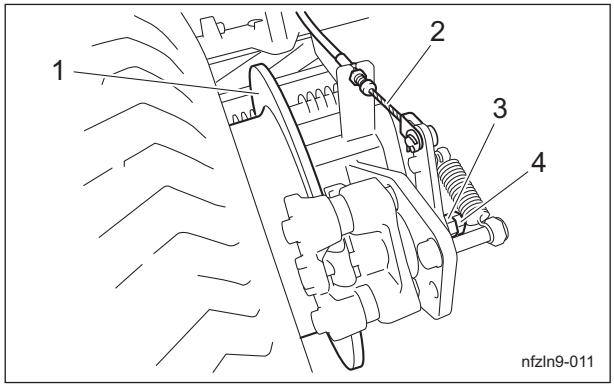

Adjustment of Brake_003

1	Brake disc
2	Wire
3	Adjustment nut
4	Lock nut

Danger

A clearance between the brake disc and the pad that is too small may result in heat generation or fire.

3. Loosen the adjustment nut to adjust the clearance between the brake disc and the pad to about 0.2 mm (0.0079 in).
4. Securely place the jack beneath the jack-up point of the front left/right frame area, and then raise it until both tires lift off the ground.
5. Check that the disc rotates freely.
6. Tighten the lock nut, and then fully tighten it while holding the adjustment nut in place.
7. With the brake pedal released, obtain a play of 1.0 mm (0.039 in) at the connection of the inner wire.

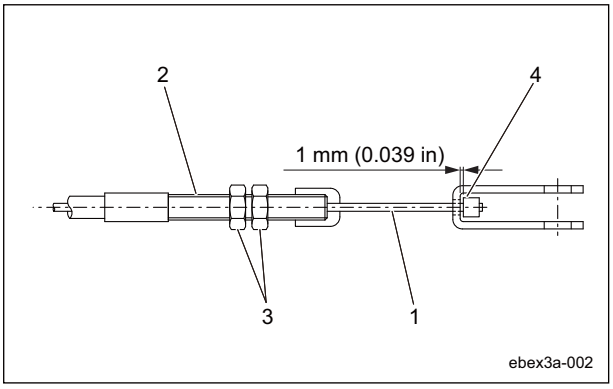

Adjustment of Brake_004

1	Inner wire
2	Adjustment bolt
3	Lock nut
4	Connection

8. Use a wrench to loosen the lock nut and tighten it after making the adjustment with the adjustment bolt.
9. Drive, and then check the following.
   - Make sure that heat is not generated in the brake area.
   - Make sure that the left and right brakes are equally effective.

Danger

It would be extremely dangerous and may result in an unexpected accident if the left and right brakes are not equally effective.

10. If the left and right brakes are not equally effective, make fine adjustments with the adjustment bolt on the brake wire.

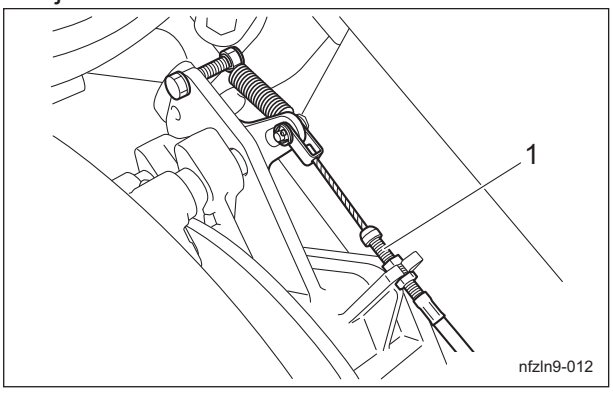

Adjustment of Brake_005

1	Adjustment bolt (on brake disc side)

https://truckmanualshub.com/

Break-in of Brakes

If the brake shoes or brake pads are worn, replace them with new ones.
Immediately after replacement, drive to break in the brakes if the effectiveness of the brakes is low.
While driving, lightly operate the brakes to break in the contact areas.

Adjusting the Neutral Position of the Piston Pump

Caution

Make sure not to touch rotating tires.

Caution

When adjusting the neutral position, pay close attention to abrupt start of the machine.
Place the jacks beneath the jack-up points, and then lift the machine until all the tires get off the ground.

If the machine moves forward or backward while the traveling pedals are released, they are not set to the neutral position.
Follow the steps below to make adjustments.

1. Stop the engine.
2. Place the jacks beneath the jack-up points, and then lift the machine off the ground.
3. Make sure that no tires come into contact with the jack stand.
4. Make sure that the steering wheel is raised completely.
5. Pull up the forward/backward adjustment lever, and then slide the seat backward completely.

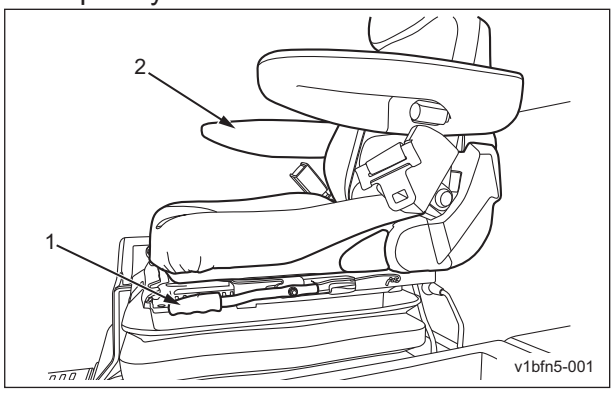

Adjusting the Neutral Position of the Piston Pump_001

1	Forward/backward adjustment lever
2	Seat

6. While pulling up the lever, tilt the seat upward.

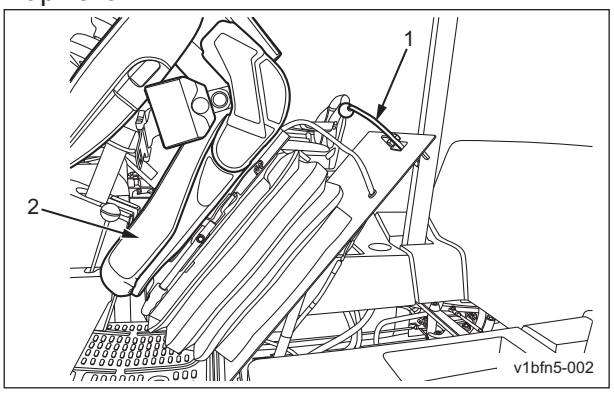

Adjusting the Neutral Position of the Piston Pump_002

1	Lever
2	Seat

7. Start the engine, and rev it up to the maximum rpm.
8. Set the 2WD/4WD selector switch to the "2WD" position.
9. Adjust the neutral position.
   [1] If the front tires rotate forward, loosen the lock nuts, and then turn the neutral adjustment rod to shorten it.
   [2] If the front tires rotate in reverse, loosen the lock nuts, and then turn the neutral adjustment rod to extend it.

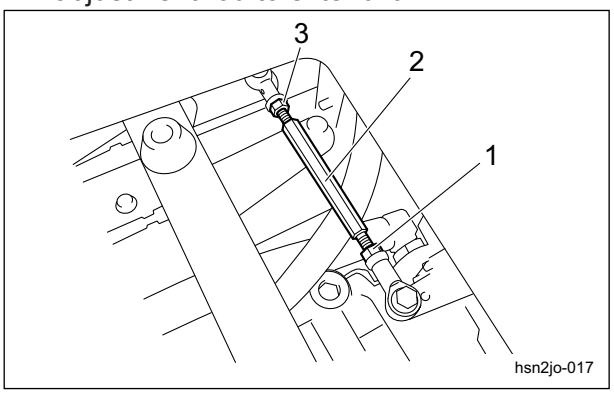

Adjusting the Neutral Position of the Piston Pump_003

1	Lock nut A (Left-hand thread)
2	Neutral adjustment rod
3	Lock nut B (Right-hand thread)

10. Find the position where the front wheels stop, and then tighten the lock nuts.

https://truckmanualshub.com/

Change of Fuse

Fuse Box

The fuse box includes spare fuses and tools.

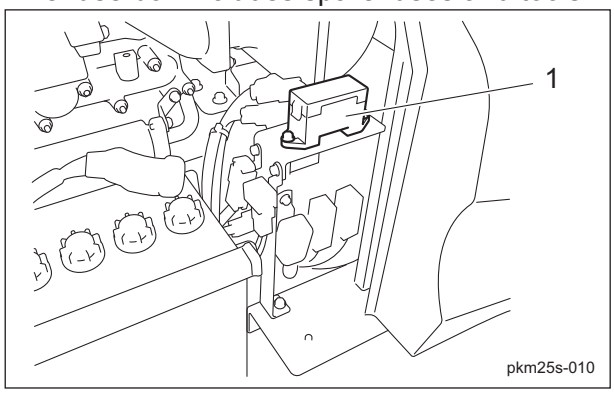

Fuse Box_001

1	Fuse box

The machine uses a mini fuse for automobiles.
Replace an old fuse with a new fuse of the specified capacity.

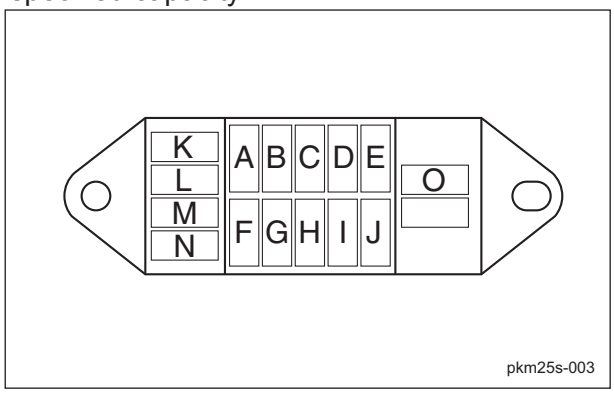

Fuse Box_002

A	5 A	ECU_KeySwitch_ON
B	5 A	Alternator
C	5 A	Display
D	15 A	Relay box 1(differential lock switch, assist switch)
E	15 A	Relay box 2 (2WD/4WD selector switch, #4/#5 proximity switches)
F	-	-
G	5 A	ECU_KeySwitch_Start
H	5 A	ECU_Parked Regeneration Switch/Auto Regeneration Inhibit Switch
I	5 A	Operating oil buzzer
J	5 A	Water temperature buzzer
K	5 A	Spare
L	5 A	
M	15 A	
N	15 A	
O	Fuse removal tool	

Fusible Link

Fuse capacities of the fusible links are 30 A and 50 A.

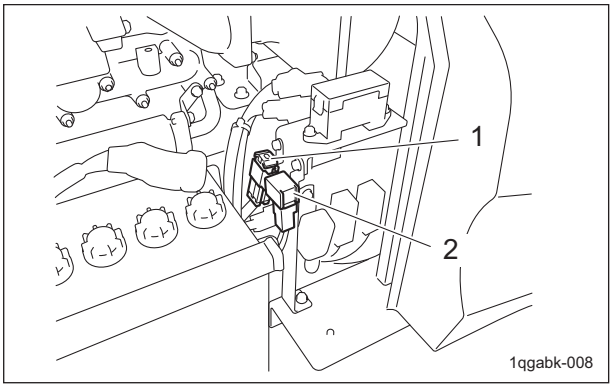

Fusible Link_001

1	Fusible link (50 A)
2	Fusible link (30 A)

Long-Term Storage

Before Long-Term Storage

- Remove dirt, grass clippings, debris, oil stains etc. completely.
- Supply oil and apply grease to appropriate parts.
- Remove the negative terminal of the battery.

https://truckmanualshub.com/

BARONESS
Quality on Demand

EU Declaration of Conformity

Product Identification

Product :		Lawnmower
Make :		BARONESS
Type :		GM2810
Version(s) :		Not Applicable
Starting Serial No. :		**10047**
Measured Sound Power Level :		LWA 104.66 dB
Guaranteed Sound Power Level :		LWA 105 dB
Manufacturer	Name :	Kyoeisha Co., Ltd.
	Address :	1-26 Miyuki-cho, Toyokawa, Aichi-pref.,Japan

Conforms to the following Directives

2006/42/EC	Machinery (MD)
2014/30/EU	Electromagnetic compatability (EMC)
2000/14/EC	Noise emissions from outdoor equipment

We has been designed and manufactured using the following specifications

ISO 12100 : 2010 (2006/42/EC)
ISO 5395-1 : 2013 (2006/42/EC)
ISO 5395-3 : 2013 (2006/42/EC)
ISO 14982 :1998 (2014/30/EU)

Technical Documentation

Keeper's Name :	Kyoeisha Co., Ltd.
Keeper's Address :	1-26 Miyuki-cho, Toyokawa, Aichi-pref.,Japan

Compiler of the technical file (2006/42/EC)

Name:	Kyoeisha U.K.Ltd.
Address:	Unit 5 Hatch Industrial Park Grewell Road,Basingstke Hampshire RG24 7NG, the United Kingdom

Conformity assessment procedures

Internal production control : Module A (2006/42/EC)
EC-type examination : Module B (2014/30/EU)
Internal control of production with assessment of technical documentation and periodical checking (2000/14/EC)

Involved Notified Body (2000/14/EC)

Name :	SNCH
Address :	11, Route de Sandweiler 5230 Sandweiler Luxembourg
Certificate / Technical Documentation No. :	SNCH*2000/14*2005/88*2910*01/TCGM2810-01

Place : Japan
Date : 21 June 2017 (21 / 06 / 2017)

Signature : Kimiya Kaneko
Name : Kimiya Kaneko
Position : Quality Dept. Manager

(fr)

Déclaration de conformité UE

Identification du produit

Produit :		Tondeuse à gazon
Fabriquant :		BARONESS
Type :		GM2810
Version(s) :		Non applicable
Numéro de série de début :		**10047**
Niveau de puissance acoustique mesuré :		LwA 104.66 dB
Niveau de puissance acoustique garanti :		LwA 105 dB
Fabricant	Nom :	Kyoeisha Co., Ltd.
	Adresse :	1-26, Miyuki-cho, Toyokawa, préfecture d'Aichi, Japon

Conforme aux directives suivantes :

2006/42/CE	Machine (MD)
2014/30/UE	Compatibilité électromagnétique (CEM)
2000/14/CE	Émissions sonores de l'équipement de plein air

Conception et fabrication en respect des spécifications suivantes :

ISO 12100 : 2010 (2006/42/CE)
ISO 5395-1 : 2013 (2006/42/CE)
ISO 5395-3 : 2013 (2006/42/CE)
ISO 14982 :1998 (2014/30/UE)

Fiche technique

Marque :	Kyoeisha Co., Ltd.
Adresse de la marque :	1-26, Miyuki-cho, Toyokawa, préfecture d'Aichi, Japon

Compilateur de la fiche technique (2006/42/CE)

Nom :	Kyoeisha U.K. Ltd.
Adresse :	Unit 5 Hatch Industrial Park Greywell Road, Basingstoke Hampshire RG24 7NG, Royaume-Uni

Procédures d'évaluation de la conformité

Contrôle de production interne : module A (2006/42/CE)
Examen de type CE : module B (2014/30/UE)
Contrôle interne de la production avec évaluation de la fiche technique et vérification périodique (2000/14/CE)

Organisme notifié impliqué (2000/14/CE)

Nom :	SNCH
Adresse :	11, Route de Sandweiler 5230 Sandweiler, Luxembourg
N° de certificat/Documentation technique :	SNCH*2000/14*2005/88*2910*01/TCGM2810-01

https://truckmanualshub.com/

(es)

Declaración de conformidad de la UE

Identificación del producto

Producto:		Cortacésped		
Marca:		BARONESS		
Tipo:		GM2810		
Versión:		No aplicable		
N.º de serie inicial:		**10047**		
Nivel de potencia sonora medido:		LWA	104.66	dB
Nivel de potencia sonora garantizado:		LWA	105	dB
Fabricante	Nombre:	Kyoeisha Co., Ltd.		
	Dirección:	1-26 Miyuki-cho, Toyokawa, Aichi-pref., Japón		

Cumple las siguientes Directivas

2006/42/CE	Maquinaria (MD)
2014/30/UE	Compatibilidad electromagnética (EMC)
2000/14/CE	Emisiones sonoras de máquinas de uso al aire libre

Se ha diseñado y fabricado utilizando las siguientes especificaciones

ISO 12100 : 2010 (2006/42/CE)
ISO 5395-1 : 2013 (2006/42/CE)
ISO 5395-3 : 2013 (2006/42/CE)
ISO 14982 :1998 (2014/30/UE)

Documentación técnica

Nombre del responsable:	Kyoeisha Co., Ltd.
Dirección del responsable:	1-26 Miyuki-cho, Toyokawa, Aichi-pref., Japón

Compilador del archivo técnico (2006/42/CE)

Nombre:	Kyoeisha U.K. Ltd.
Dirección:	Unit 5 Hatch Industrial Park Greywell Road, Basingstoke Hampshire RG24 7NG, Reino Unido

Procedimientos de evaluación de conformidad

Control de fabricación interno: Módulo A (2006/42/CE)
Examen de tipo CE: Módulo B (2014/30/UE)
Control interno de fabricación con evaluación de documentación técnica y comprobaciones periódicas (2000/14/CE)

Organismo notificado implicado (2000/14/CE)

Nombre:	SNCH
Dirección:	11, Route de Sandweiler 5230 Sandweiler Luxemburgo
Certificado/Documentación técnica n.º:	SNCH*2000/14*2005/88*2910*01/TCGM2810-01

(de)

EU-Konformitätserklärung

Produktbeschreibung

Produkt:		Rasenmäher		
Marke:		BARONESS		
Modell:		GM2810		
Version(en):		Nicht zutreffend		
Startseriennummer:		**10047**		
Gemessener Schallleistungspegel:		LWA	104.66	dB
Garantierter Schallleistungspegel:		LWA	105	dB
Hersteller	Name:	Kyoeisha Co., Ltd.		
	Adresse:	1-26 Miyuki-cho, Toyokawa, Aichi-pref.,Japan		

Entspricht den folgenden Richtlinien

2006/42/EG	Maschinenrichtlinie
2014/30/EU	Elektromagnetische Verträglichkeit (EMV)
2000/14/EG	Geräuschemission von im Freien betriebenen Geräten

Unter Anwendung der folgenden Bestimmungen entwickelt und hergestellt

ISO 12100 : 2010 (2006/42/EG)
ISO 5395-1 : 2013 (2006/42/EG)
ISO 5395-3 : 2013 (2006/42/EG)
ISO 14982 :1998 2014/30/EU)

Technische Dokumentation

Name des Halters	Kyoeisha Co., Ltd.
Adresse des Halters	1-26 Miyuki-cho, Toyokawa, Aichi-pref.,Japan

Technische Unterlagen erstellt von (2006/42/EG)

Name:	Kyoeisha U.K.Ltd.
Adresse:	Unit 5 Hatch Industrial Park Grewell Road,Basingstoke Hampshire RG24 7NG, Großbritannien

Konformitätsbewertungsverfahren

Interne Produktionskontrolle : Modul A (2006/42/EG)
EG-Baumusterprüfung : Modul B (2014/30/EU)
Interne Produktionskontrolle mit Bewertung der technischen Unterlagen und regelmäßiger Überprüfung (2000/14/EG)

Beteiligte benannte Stelle (2000/14/EG)

Name:	SNCH
Adresse :	11, Route de Sandweiler 5230 Sandweiler Luxemburg
Bescheinigung/Technische Dokumentation Nr. :	SNCH*2000/14*2005/88*2910*01/TCGM2810-01

https://truckmanualshub.com/

(sv)

EU-försäkran om överensstämmelse

Produktidentifikation

Produkt :		Gräsklippare		
Märke:		BARONESS		
Typ:		GM2810		
Version(er):		Ej aktuellt		
Serienummer startar på:		**10047**		
Uppmätt ljudeffektnivå:		LWA	104.66	dB
Garanterad ljudeffektnivå:		LWA	105	dB
Tillverkare	Namn:	Kyoeisha Co., Ltd.		
	Adress:	1-26 Miyuki-cho, Toyokawa, Aichi-pref., Japan		

Uppfyller följande direktiv

2006/42/EG	Maskindirektivet
2014/30/EU	Elektromagnetisk kompabilitet (EMC)
2000/14/EG	Bulleremission från utomhusutrustning

Följande kravspecifikationer har följts vid konstruktion och tillverkning

ISO 12100 : 2010 (2006/42/EG)
ISO 5395-1 : 2013 (2006/42/EG)
ISO 5395-3 : 2013 (2006/42/EG)
ISO 14982 : 1998 (2014/30/EU)

Teknisk dokumentation

Innehavarens namn:	Kyoeisha Co., Ltd.
Innehavarens adress:	1-26 Miyuki-cho, Toyokawa, Aichi-pref., Japan

Den tekniska filen(2006/42/EG) har tagits fram av

Namn:	Kyoeisha U.K.Ltd.
Adress:	Unit 5 Hatch Industrial Park Grewell Road, Basingstoke Hampshire RG24 7NG, Storbritannien

Förfarande för bedömning av överensstämmelse

Intern produktionskontroll: Modul A (2006/42/EG)
EG-typprovning: Modul B (2014/30/EU)
Intern kontroll av produktion med fastställande av teknisk dokumentation och periodiska kontroller (2000/14/EG)

Anmält organ (2000/14/EG)

Namn:	SNCH
Adress:	11, Route de Sandweiler 5230 Sandweiler Luxembourg
Certifikat/Teknisk dokumentation nummer:	SNCH*2000/14*2005/88*2910*01/TCGM2810-01

https://truckmanualshub.com/

BARONESS®

Quality on Demand

KYOEISHA CO.,LTD.

Head Office 1-26, Miyuki-cho, Toyokawa, Aichi-Pref. 442-8530 Japan. Tel :(0533) 84-1390 Fax:(0533) 89-3623

GM2810--UM--GBZ/18F-00-S.K
E01[GM2810_EU01]