https://truckmanualshub.com/

snorkel

TB66J

OPERATOR'S MANUAL

Part Number 0083740
May 2014

Models TB66J/TB66JRT
Replaces 0083740 March 2014

https://truckmanualshub.com/

DANGER

The aerial platform is not electrically insulated. Death or serious injury will result from contact with, or inadequate clearance from, an energized conductor.

Do not go closer than the minimum safe approach distance as defined by the Minimum Safe Approach Distance section in Chapter 3 – Safety.

Regard all conductors as energized.

Allow for electrical wire sag and aerial platform sway.

If the platform, booms, or any part of the aerial platform contacts a high-voltage electrical conductor, the entire machine can become electrically charged.

If that happens, remain on the machine and do not contact any other structure or object. This includes the ground, adjacent buildings, poles, and any other objects that are not part of the aerial platform.

Such contact could make your body a conductor to the other object, creating an electrical shock hazard resulting in death or serious injury.

If an aerial platform is in contact with an energized conductor the platform operator must warn ground personnel in the vicinity to stay away. Their bodies can conduct electricity creating an electrical shock hazard resulting in death or serious injury.

Do not approach or leave the aerial platform until the electricity has been turned off.

Do not attempt to operate the lower controls when the platform, booms, or any part of the aerial platform is in contact with a high-voltage electrical conductor or if there is an immediate danger of such contact.

Personnel on or near an aerial platform must be continuously aware of electrical hazards, recognizing that death or serious injury can result from contact with an energized conductor.

California

Proposition 65 Warning

Battery posts, terminals and related accessories contain lead and lead components, a chemical known to the State of California to cause cancer and birth defects or other reproductive harm. Wash hands after handling.

California

Proposition 65 Warning

Diesel and gasoline engine exhaust and some of its constituents are known by the State of California to cause cancer, birth defects and other reproductive harm.

https://truckmanualshub.com/

Table of Contents

Electrical Danger ..... Inside Front Cover
California Proposition 65 ..... Inside Front Cover

Chapter 1 – Introduction
Aerial Platform Features.....1
Options 1
Operator's Manual.....1
Safety Alerts 1
Operation.....2
Maintenance.....2
Manual of Responsibilities.....2
Additional Information.....2

Chapter 3 – Specifications
Component Identification.....3
Working Envelope 4
General Specifications.....5
Engine Specifications 6
Engine Oil Viscosity.....8

Chapter 3 – Safety
Electrocution Hazards 11
Minimum Safe Approach Distance 11
Prestart Inspection.....12
Work Place Inspection and Practices 12
Operation.....12
Tip-Over and Falling Hazards.....13
Electrical System 13
Hydraulic System.....13
Engine and Fuel Handling Precautions 14
Placards and Decals.....14

Chapter 4 – Safety Devices
Emergency Stop Controls.....15
Emergency Power System 15
Emergency Lowering Knob 16
Ground Operation Switch 16
Platform Foot Switch 16
Guardrails.....16
Lanyard Anchors.....16
Ground Fault Circuit Interrupter.....17
Tilt Alarm.....17
Engine Protection Systems 17
High Engine Temperature Alarm 17
Low Oil Pressure Alarm.....17
Horn.....18
All Motion Alarm.....18
Flashing Light 18
Driving Lights.....18
Platform Work Lights 18
Bump Guard System 18

Chapter 5 – Gauges and Displays
Hour Meter.....19
Engine Temperature Gauge 19
Ammeter – Cummins, Deutz and Ford Engines.....19
Voltmeter – General Motors Engines.....19
Engine Air Filter Gauge 19
Fuel Gauge.....19
Engine Oil.....20
Hydraulic Fluid Filter Gauge.....20
Fluid Level and Temperature Gauge 20

Chapter 6 – Controls
Battery Disconnect Switch.....21
Lower Controls 21
Emergency Stop Button 21
Control Selector Switch.....21
Start Switch 21
Ground Operation Switch.....22
Rotation Switch 22
Boom Elevation Switch 22
Boom Extend/Retract Switch 22
Jib Articulation Switch 22
Boom Speed Knob 23
Platform Level Switch.....23
Platform Rotation Switch.....23
Engine/Emergency Power Switch 23
Throttle Switch 23
Fuel Switch.....23
Hydraulic System Warm-up Switch 23
Circuit Breaker Reset Buttons 24
Upper Controls 24
Start Switch 25
Emergency Stop Button 25
Drive Joystick 25
Drive Range Switch.....26
Boom Joystick 26
Boom Extension Switch 26
Jib Articulation Switch 26
Platform Level Switch.....26
Platform Rotation Switch.....26
Boom Speed Knob 26
Throttle Switch 26
Engine/Emergency Power Switch 27
Platform Foot Switch 27
Machine/Generator Switch 27
Hydraulic System Warm-up Switch 27
Driving and Platform Work Lights 28
Horn Button 28

https://truckmanualshub.com/

Chapter 7 – Prestart Inspection

Operator's Manual 29
Engine 29
Oil Level 29
Coolant 29
Radiator 30
Fuel Tank 30
Fuel Line 31
Air Filter 31
Charging System 31
Cold Weather Start Kit 31
Electrical System 32
Battery Fluid Level 32
Battery Terminals 32
Cables and Wiring Harness 32
Hydraulic System 32
Fluid Level 32
Fluid Filter 33
Hoses, Tubes, and Fittings 33
Tires and Wheels 33
Lower Control Station 34
Operating Controls 34
Emergency Stop 34
Emergency Power 34
Emergency Lowering 34
Level Sensor 35
Flashing Light 35
Sandblast Protection Kit 36
Structures 36
Weldments 36
Slide Pads 36
Wire Ropes 36
Fasteners 37
Upper Control Station 37
Guardrail System 37
Lanyard Anchors 38
Operating Controls 38
Emergency Stop 38
Emergency Power 38
Horn 39
Electrical Power Outlet 39
All Motion Alarm 39
Air Line to Platform 39
Driving and Platform Work Lights 39
Tow Kit 40
Platform Glazier Package 40
Platform Control Cover 40
Placards and Decals 40
Prestart Inspection Checklist 47

Chapter 8 – Operation

Cold Weather Start Up 49
Engine Cold Weather Start Kit 49
Cummins, Kubota and Ford – Block Heater 49
Cummins – Ether Injection 49
Deutz – Manifold Preheater 50
GM – Radiator Hose In-Line 50
Hydraulic System Cold Weather Warm-Up 50
Hydraulic System Warm-up Switch 50
Manually Warming The Hydraulic System 50
Preparing for Operation 50
Lower Controls 50
Upper Controls 51
Boom Operation 52
Driving and Steering 52
Drive Speeds 53
Motion Warning Alarm 53
Four Wheel Drive 53
Gradeability 53
Percent vs. Degree of Slope 54
Driving on a Slope 54
Calculating Percent Grade 54
Machine Gradeability 55
All Motion Alarm 55
Four Wheel Drive 55
Electrical Power Outlet 55
AC Generator 55
Dual Fuel 56
Air Line 56
Driving Lights 56
Platform Work Lights 56
Platform Glazier Package 57
Platform Capacity 57
Bump Guard System 57

Chapter 9 – Stowing and Transporting

Stowing 59
Transporting 59
Driving 59
Winching 60
Hoisting 60
Securing for Transport 61

Chapter 10 – Emergency Operation

Emergency Power System 63
Lower Controls 63
Upper Controls 63
Emergency Lowering 64
Towing 65

Chapter 11 – Troubleshooting

Troubleshooting Chart 67

Appendix A – Glossary

Limited Warranty

https://truckmanualshub.com/

Chapter 1 – Introduction

Aerial Platform Features

The aerial platform is a boom-supported elevating work platform used to raise personnel, tools and materials to the workstation. The booms are raised and lowered with hydraulic cylinders. Hydraulic motors on the drive wheels provide power to move the aerial platform.

The standard machine includes the following features.

- Proportional boom lift, swing and drive control
- 180 degree hydraulic platform rotation
- 360 degree continuous turntable rotation
- 6′ articulating jib boom
- 39″ x 96″ (99 cm x 243 cm) steel 500 lb (227 kg) capacity platform
- Platform gravity gate
- Drivable at full height
- Two safety lanyard attachments
- Manual lowering valve at chassis
- Hydraulic oil level and temperature gauges
- Tie-down/lifting lugs
- Battery operated emergency power system
- Engine anti-restart
- High engine temperature shut down
- Low oil pressure shut down
- Tilt alarm
- Hour meter
- Ammeter – Cummins, Deutz, Ford engines
- Voltmeter – GM engine
- Coolant temperature gauge
- Spark arrestor muffler – GM engines
- Foam filled tires
- Four wheel drive
- Five year limited warranty

The machine may be powered with one of the following engines.

- Cummins B3.3 – Diesel
- Deutz F4L-1011F – Diesel
- Deutz F4L-2011F – Diesel
- Kubota V2403-M-T – Diesel
- Ford LRG 425 – Gasoline, LPG or dual fuel
- Ford LRG 423 – Gasoline, LPG or dual fuel
- General Motors 2.4L – Gasoline, LPG or dual fuel

The aerial platform has been manufactured to conform to all applicable requirement of the following organizations.

- Occupational Safety and Health Administration (OSHA)
- American National Standards Institute (ANSI)

Options

The following options may be provided on the machine.

- Lower control cover
- Platform work lights – flood lights
- Flashing light
- Driving lights – two headlights and two rear lights
- Platform swinging gate
- Side entry gravity gate
- Sandblast protection kit
- Cold weather start kit
- Hydraulic system cold weather warm-up kit
- AC generator – hydraulic powered, 110 V, 2000 W
- AC generator – hydraulic powered, 220 V, 50Hz
- All motion alarm
- Airline to platform
- Tow kit
- 30″ x 96 (76 cm x 244 cm) aluminum 500 lb (272 kg) capacity platform
- 30″ x 96″ (76 cm x 244 cm) steel 500 lb (227 kg) capacity platform
- 30″ x 60″ (76 cm x 152 cm) aluminum 600 lb (272 kg) capacity platform
- Horn
- Two wheel drive
- Platform glazier package
- Platform welder package
- Spark arrestor muffler – Deutz engines
- Dual fuel with 20 gallon gasoline tank
- Tilt warning light
- Flotation tires
- Highway tread tires
- Non-marking tires
- Canadian Standards Association (CSA)

Operator’s Manual

This manual provides information for safe and proper operation of the aerial platform. Some information in this manual refers to options that may or may not be on your machine. Read and understand the information in this Operator’s Manual before operating the aerial platform on the job.

Additional copies of this manual may be ordered from Snorkel. Supply the model and manual part number from the front cover to assure that the correct manual will be supplied.

All information in this manual is based on the latest product information at the time of publication. Snorkel reserves the right to make product changes at any time without obligation.

Safety Alerts

A safety alert symbol is used throughout this manual to indicate danger, warning and caution instructions. Follow these instructions to reduce the likelihood of personal injury and property damage. The terms danger, warning

https://truckmanualshub.com/

and caution indicate varying degrees of personal injury or property damage that can result if the instruction is not followed.

⚠Danger

Indicates an imminently hazardous situation which, if not avoided, will result in death or serious injury. This signal word is to be used in the most extreme situations.

⚠Warning

Indicates a potentially hazardous situation which, if not avoided, could result in death or serious injury.

⚠Caution

Indicates a potentially hazardous situation which, if not avoided, may result in minor or moderate injury. It may also be used to alert against unsafe practices.

Notes
Notes are used to provide special information or helpful hints to assist in aerial platform operation, but do not indicate a hazardous situation.

Operation

The aerial platform has built-in safety features and has been factory tested for compliance with Snorkel specifications and industry standards. However, any personnel lifting aerial platform can be potentially dangerous in the hands of untrained or careless operators.

⚠Warning

The potential for an accident increases when the aerial platform is operated by personnel who are not trained and authorized. Death or serious injury can result from such accidents. Read and understand the information in this manual and on the placards and decals on the machine before operating the aerial platform on the job.

Training is essential and must be performed by a qualified person.

- Become proficient in knowledge and actual operation before using the aerial platform on the job.
- The operator must be trained and authorized to perform any functions of the aerial platform.
- Operation of the aerial platform must be within the scope of the machine specifications.

The operator bears ultimate responsibility for following all manufacturer's instructions and warnings, regulations and safety rules of their employer and/or any state or federal law.

Maintenance

Every person who maintains, inspects, tests, or repairs the aerial platform must be qualified to do so. Following the daily prestart inspection in this Operator's Manual will help keep the aerial platform in optimum working condition. Other maintenance functions must be performed by maintenance personnel who are qualified to work on the aerial platform.

⚠Caution

Welding current can be very intense. Damage to electronic components may result. Connect the ground clamp as close as possible to the area being welded. Disconnect battery cables and any microprocessors and engine control modules before welding on the machine.

If it becomes necessary to weld aerial platform components as a method of repair, take all precautions to prevent damage to electronic circuitry and devices on the machine. This includes, but may not be limited to, disconnecting battery cables and electronic devices.

Do not modify this aerial platform without prior written consent of the Snorkel Engineering Department. Modification may void the warranty, adversely affect stability, or affect the operational characteristics of the aerial platform.

Manual of Responsibilities

All owners and users of the aerial platform must read, understand, and comply with all applicable regulations. Ultimate compliance to OSHA regulations is the responsibility of the user and their employer.

ANSI publications clearly identify the responsibilities of all personnel who may be involved with the aerial platform. A reprint of the "Manual of Responsibilities for Dealers, Owners, Users, Operators, Lessors and Lessees of ANSI/SIA A92.5-2006 Boom-Supported Elevating Work Platforms" is available from Snorkel dealers or from the factory upon request.

Copies are also available from:

Scaffold Industry Association, Inc.
P.O. Box 20574
Phoenix, AZ 85036-0574 USA

Additional Information

For additional information contact your local dealer or Snorkel at:

Snorkel International
P.O. Box 1160
St. Joseph, MO 64502-1160 USA
1-800-255-0317

http://www.snorkelusa.com

https://truckmanualshub.com/

Chapter 3 – Specifications

Component Identification

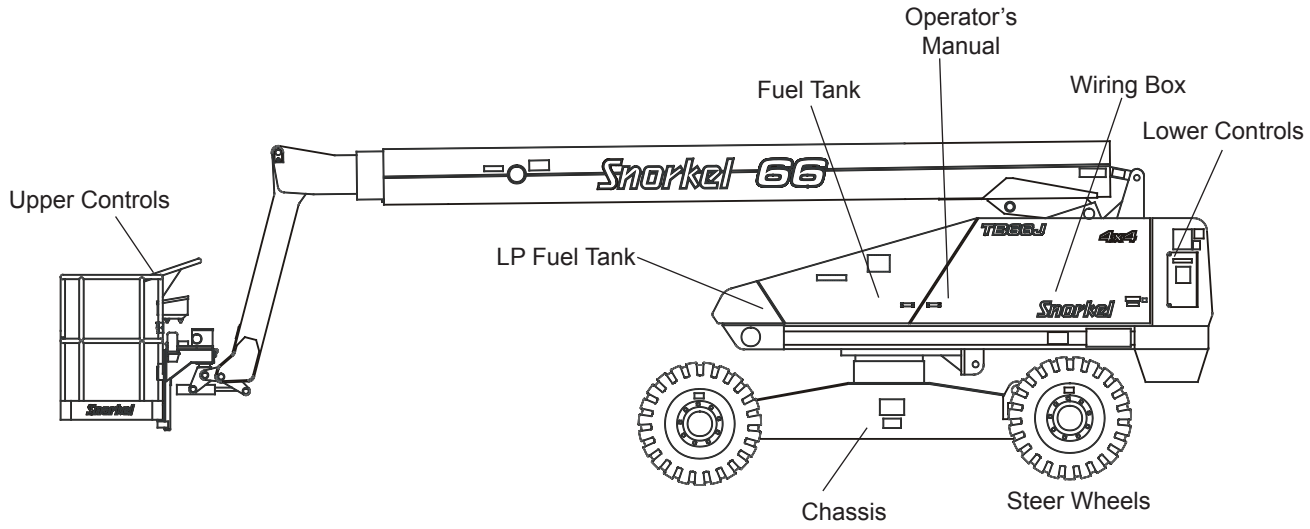

Right Side

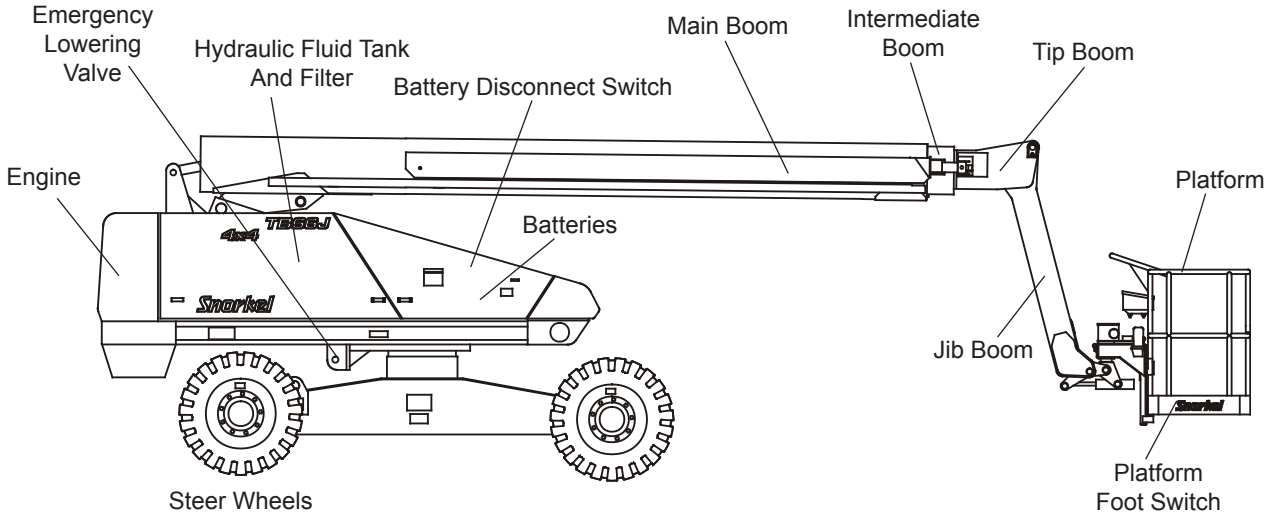

Left Side

https://truckmanualshub.com/

Working Envelope

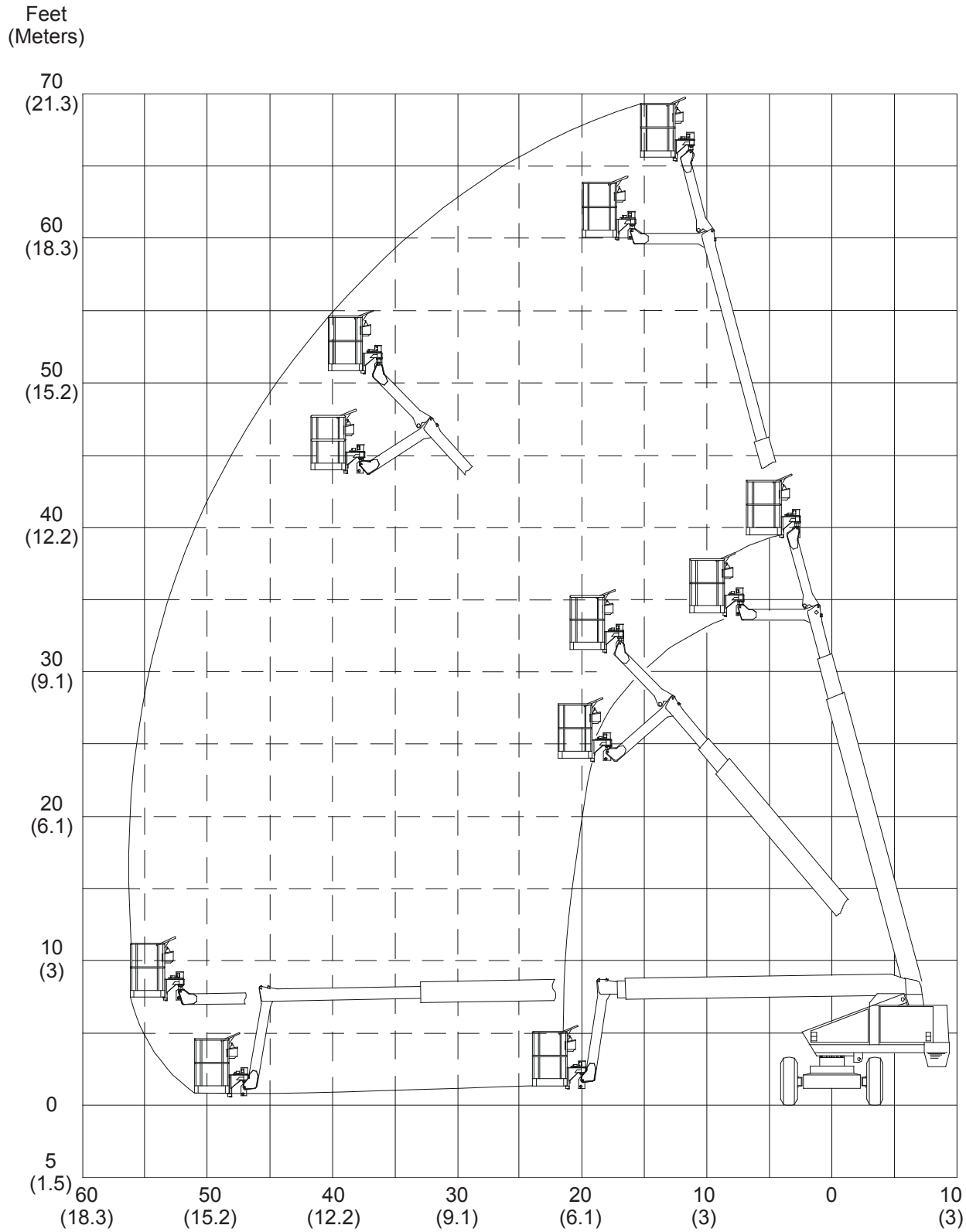

https://truckmanualshub.com/

General Specifications

Aerial Platform

Working height	72′ (21.9 m)
Maximum platform height	66′ (20.1 m)
Horizontal reach	56′ (17.1 m)
Main boom	
Articulation	-1° to +72°
Extension	0 to 27′ 4″ (0 to 8.33 m)
Turntable rotation	360° continuous
Turning radius, inside	15′ 5″ (4.7m)
Wheelbase	10′ (3 m)
Ground clearance	13″ (33 cm)
Maximum wheel load	13,360 lbs (6060 kg)
Maximum ground pressure	80 psi (552 kPa)
Weight, GVW	
Approximate	26,220 lbs (11,916 kg)
Stowed width	7′ 11.5″ (2.4 m)
Stowed length	33′ (10 m)
Stowed height	8′ 9″ (2.7 m)

Platform

Dimensions	
Standard steel	39″ x 96″ (99 cm x 243 cm)
Rated work load	500 lb (227 kg)
Optional aluminum	30″ x 60″ (76 cm x 152 cm)
Rated work load	600 lb (272 kg)
Optional aluminum	30″ x 96″ (76 cm x 244 cm)
Rated work load	500 lb (227 kg)
Optional steel	30″ x 96″ (76 cm x 244 cm)
Rated work load	500 lb (227 kg)
Rotation	90° CW to 80° CCW
Maximum number of occupants	2 people
Optional AC generator	125 VAC
Optional AC generator	220 VAC, 50 Hz

Function Speed

Turntable rotation, 360 degrees	85 to 95 seconds
Main boom	
Up	40 to 50 seconds
Down	40 to 50 seconds
Extend	60 to 70 seconds
Retract	35 to 50 seconds
Jib	
Up	7 to 13 seconds
Down	7 to 13 seconds
Platform rotation, 170 degrees	16 to 20 seconds
Drive	
High, booms stowed	3.0 mph (4.8 km/h)
Low, booms elevated	1.0 mph (1.6 km/h)

Drive System

Standard	Four-wheel drive
Gradeability	30%
Optional	Two-wheel drive
Gradeability	25%

Tires

Foam Fillled	
Highway tread,14 ply	15″ x 19.5″ (38 cm x 50 cm)
Bar lug, 4x4 12 ply	15″ x 19.5″ (38 cm x 50 cm)
Flotation, 4x4	40″ x 19-19.5″ (101.6 cm x 50 cm)
Air Fillled	
Flotation	40″ x 19-19.5″ (101.6 cm x 50 cm)

Electrical System

Voltage	12 V DC negative chassis ground
Source	12 V 550 CCA battery
Fluid recommended	distilled water

Hydraulic System

Maximum pressure	2,500 psi (17,250 kPa)
Reservoir capacity	26.1 US gal (99 l)
System capacity	35 US gal (132 l)
Maximum operating temperature	200°F (93°C)
Hydraulic fluid recommended	
Above 10°F (-12°C)	Mobil DTE-13M (ISO VG32)
Below 10°F (-12°C)	Mobil DTE-11M (ISO VG15)

Engine

Diesel	Cummins B3.3
	Deutz F4L-1011F
	Deutz F4L-2011F
	Kubota V2403-M-T
Gasoline and/or LPG	Ford LRG 423
	Ford LRG 425
	General Motors 2.4L

Fuel Tank Capacity

Diesel or gasoline	40 US gal (151 l)
LPG	43.5 lbs (19.7 kg)
Dual fuel gasoline	20 US gal (76 l)

Ambient Air Temperature Operating Range

Fahrenheit	0°F to 110°F
Celsius	-18°C to 43°C

Maximum Wind Speed

Gust or steady	28 mph (12.8 m/s)

https://truckmanualshub.com/

Engine Specifications

Engine	Displacement	Fuel Grade	Coolant	Operating Temperature	Oil Capacity	Oil Grade
Cummins B3.3	199 cu. in. (3.26 liter)	**Diesel** ASTM No. 2D fuel with a minimum Cetane no. of 40.[1] For operating temperature below 0°C (32°F) use winterized No. 2D.	50% Water 50% Antifreeze[2]	140°F to 212°F 60°C to 100°C	2 US gal (7.5 liter)[3]	SAE 15W-40[3] API CH4/SG
Deutz F4L-1011F	190 cu. in. (3.11 liter)[3]	**Diesel** • DIN 51 601 (February 1986).[1] • BS 2869: A1 and A2 (with A2 refer to Deutz manual about sulfur content)[1] • ASTM D 975-88: 1-D and 2-D • CEN EN 590 or DIN EN 590 • NATO Code F-54 and F-75 • For operating temperatures below 0°C (32°F) use winter grade diesel.	Air	172°F to 203°F 78°C to 95°C	2.75 US gal (10.4 liter)	API: CD or higher[3]
Deutz F4L-2011F	190 cu. in. (3.11 liter)	**Diesel** • DIN 51 601 (February 1986).[1] • BS 2869: A1 and A2 (with A2 refer to Deutz manual about sulfur content)[1] • ASTM D 975-88: 1-D and 2-D • CEN EN 590 or DIN EN 590 • NATO Code F-54 and F-75 • For operating temperatures below 0°C (32°F) use winter grade diesel.	Air	172°F to 203°F 78°C to 95°C	2.75 US gal (10.4 liter)	API: CD or higher[3]
Kubota V2403-M-T	148.5 cu. in. (2.43 liter)	**Diesel** Diesel Fuel No. 2-D ASTM D975[1]	50% water 50% Antifreeze[2]	NA	2.51 gal (9.5 liter)	API: CF grade or higher[3]

Note 1: Refer to the engine manufacturers manual for specific fuel recommendations and specifications.

Note 2: Refer to the engine manufacturers manual for specific coolant recommendations and specifications.

Note 3: Refer to the engine manufacturers manual for specific lubricating oil recommendations and specifications.

https://truckmanualshub.com/

Engine	Displacement	Fuel Grade	Coolant	Operating Temperature	Oil Capacity	Oil Grade
Ford LRG 425	153 cu. in. (2.5 liter)[3]	**Gasoline** Unleaded 87 or 89 octane.[1] Do not use gasoline blends with more than 10% ethanol by volume octane index of 87 or 89. **LPG** HD-5 USA [1] EN589 European	50% Water 50% Antifreeze[3]	195°F to 220°F 91°C to 104°C	4.5 US qt (4.26 liter)[3]	API: SH or SJ[2]
Ford LRG 423	140 cu. in. (2.3 liter)	**Gasoline** Unleaded gasoline 85 octane (motor method).[1] **LPG** Gas Processors Association Standard 2140 Category: special duty propane	50% Water 50% Antifreeze[3]	160°F to 190°F 71°C to 88°C	4 US qt (3.8 liter)	**Gasoline** API: SH SG only if SH is not available[2] **LPG** SG or SH
GM 2.4L	150 cu. in. (2.4 liter)	**Gasoline** Unleaded 87 octane[1] **LPG** HD-5[1]	50% Water 50% Antifreeze[5]	176°F to 183°F 80°C to 84°C	With filter: 1.12 US gal (4.5 liter) W/o filter: 1.18 US gal (4.25 liter)	ILSAC GF-4[4]

Note 1: Refer to the engine manufacturers manual for specific fuel recommendations and specifications.

Note 2: Refer to the engine manufacturers manual for specific lubricating oil recommendations and specifications.

Note 3: Refer to the Ford LRG 425 Operator Handbook for specific coolant recommendations and specifications.

Note 4: API Starburst symbol on GF-4 oils reads “API Service SM.”

Note 5: Refer to the engine manufacturers manual for specific coolant recommendations and specifications.

https://truckmanualshub.com/

Engine Oil Viscosity

Cummins B3.3

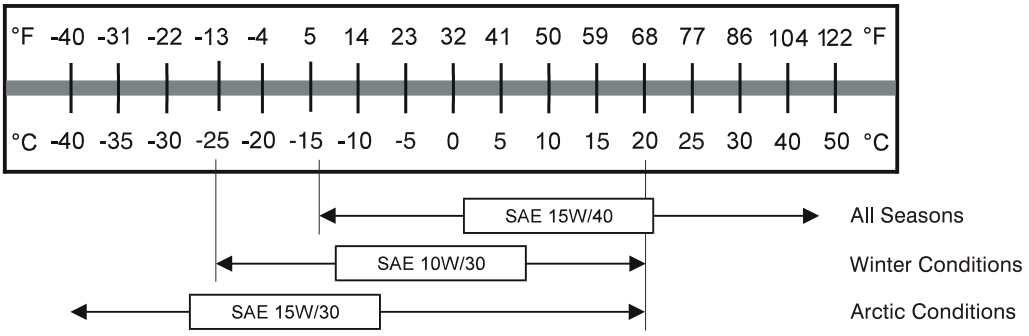

Deutz F4L-1011F
Deutz F4L-2011F

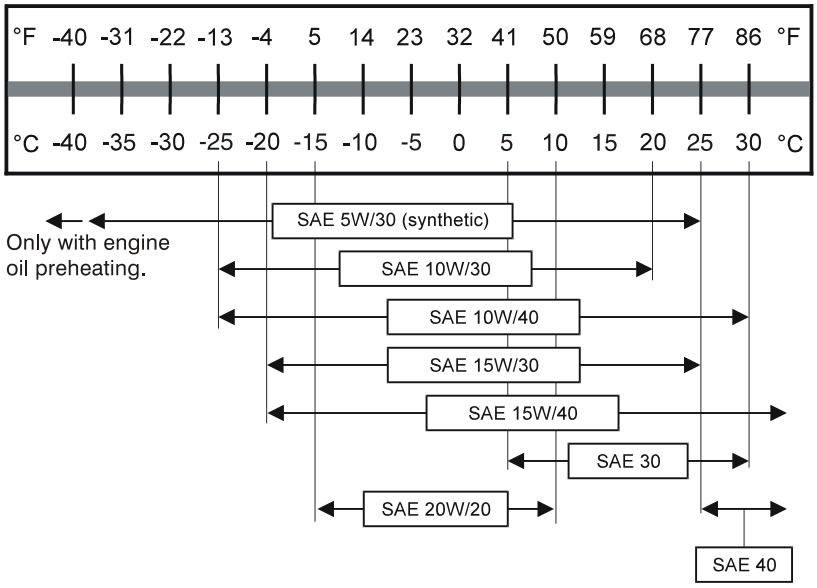

Kubota V2403-M-T

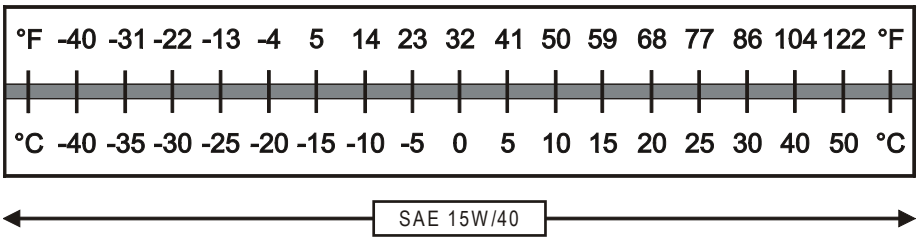

https://truckmanualshub.com/

Ford LRG 423

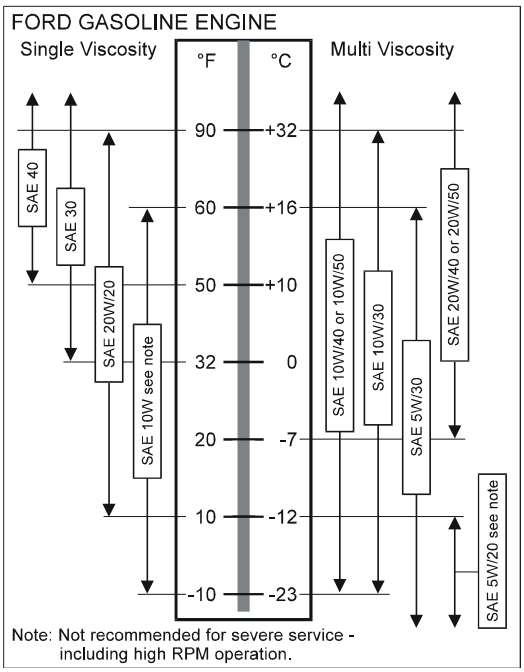

Ford LRG 425

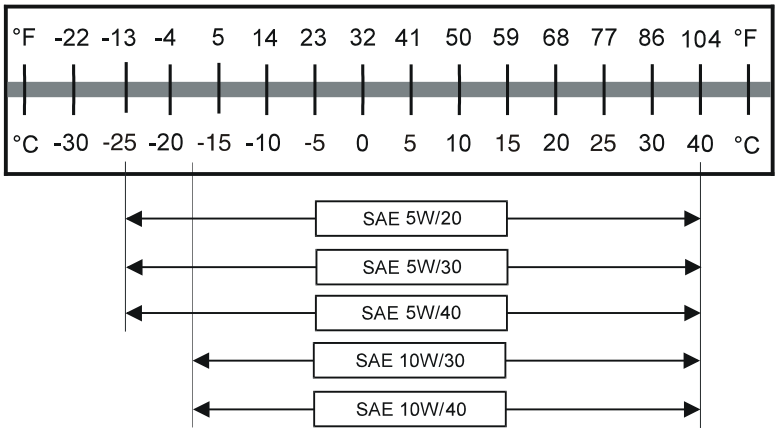

General Motors 2.4L

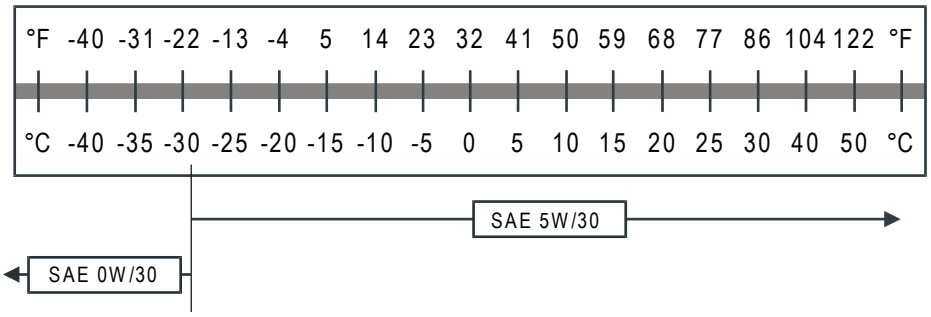

Note
No straight weight oils and no specialized diesel oils are to be used in GM engines.

https://truckmanualshub.com/

https://truckmanualshub.com/

Chapter 3 – Safety

Knowledge of the information in this manual, and proper training, provide a basis for safely operating the aerial platform. Know the location of all controls and how they operate to act quickly and responsibly in an emergency.

Safety devices reduce the likelihood of an accident.

- Never disable, modify, or ignore any safety device.
- Safety alerts in this manual indicate situations where accidents may occur.

If any malfunction, hazard or potentially unsafe condition relating to capacity, intended use, or safe operation is suspected, stop aerial platform operation and seek assistance.

The operator bears ultimate responsibility for following all manufacturer's instructions and warnings, regulations and safety rules of their employer and/or any state or federal law.

Electrocution Hazards

The aerial platform is made of metal components and is not insulated. Regard all conductors as energized. Do not operate outside during a thunderstorm.

Minimum Safe Approach Distance

Minimum safe approach distances to energized power lines and their associated parts must be observed while operating the aerial platform.

⚠Danger

The aerial platform is not electrically insulated. Death or serious injury will result from contact with, or inadequate clearance from, an energized conductor. Do not go closer than the minimum safe approach distance as defined by ANSI.

ANSI publications define minimum distances that must be observed when working near bus bars and energized power lines. Table 1 and Figure 3 are reprinted courtesy of Scaffold Industry Association, ANSI/SIA A92.5.

Voltage Range (Phase to Phase)	Minimum Safe Approach Distance	
	Feet	Meters
0 to 300V	Avoid Contact	
Over 300V to 50kV	10	3.05
Over 50kV to 200kV	15	4.60
Over 200kV to 350Kv	20	6.10
Over 350kV to 500kV	25	7.62
Over 500kV to 750kV	35	10.67
Over 750kV to 1000kV	45	13.72

Table 1 – Minimum Safe Approach Distance

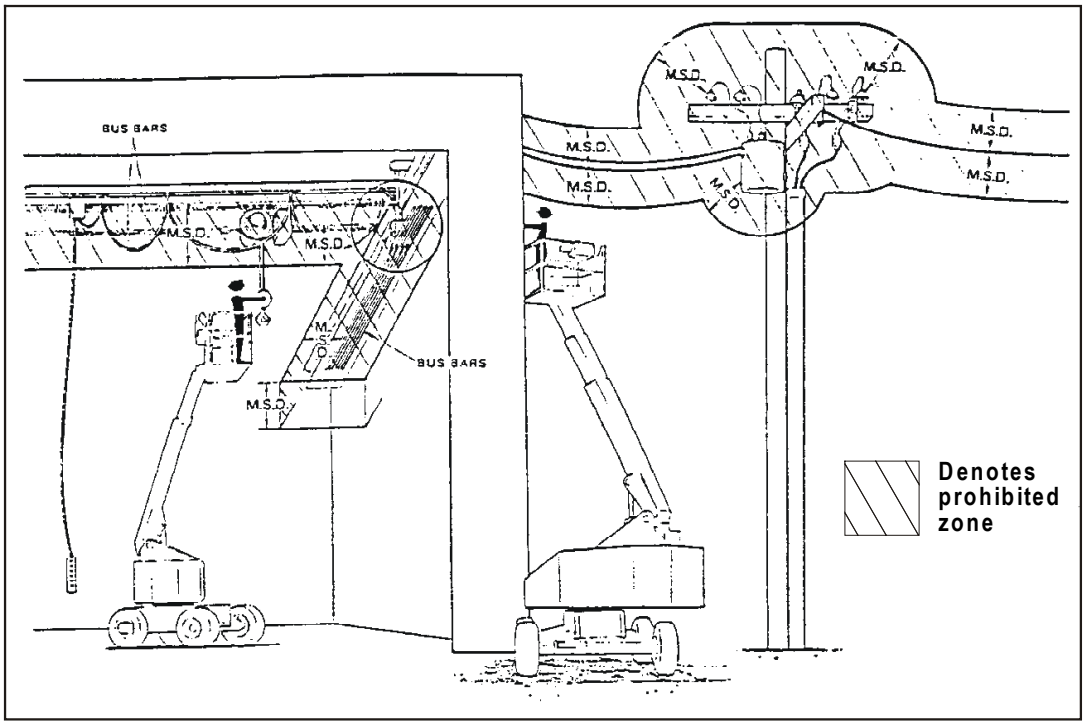

Figure 3 – Minimum Safe Approach Distance

https://truckmanualshub.com/

Prestart Inspection

Perform a prestart inspection before each shift as described in Chapter 7. Do not use the aerial platform on the job unless you are trained and authorized to do so.

Work Place Inspection and Practices

Do not use the aerial platform as a ground connection when welding.

- The welding ground clamp must be attached to the same structure that is being welded.
- Electrical current flow can be very intense, causing serious internal damage to some components.

Inspect the area before and during aerial platform use. The following are some potential hazards that may be in the work place.

- Debris
- Slopes
- Drop-offs or holes
- Bumps and floor obstructions
- Overhead obstructions
- Unauthorized persons
- High voltage conductors
- Wind and weather conditions
- Inadequate surface and support to withstand load forces applied by the aerial platform in all operating configurations

Before using the aerial platform in any hazardous (classified) location, make certain it is approved and of the type required by ANSI/NFPA 505 for use in that particular location.

Know and understand the job site traffic-flow patterns and obey the flagmen, road signs and signals.

While operating the aerial platform, a good safety practice is to have qualified personnel in the immediate work area to:

- Help in case of an emergency
- Operate emergency controls as required
- Watch for loss of control by platform operator
- Warn the operator of any obstructions or hazards that may not be obvious to them
- Watch for soft terrain, sloping surfaces, drop-offs, etc. where stability could be jeopardized
- Watch for bystanders and never allow anyone to be under, or to reach through the booms while operating the aerial platform

⚠Danger

Pinch points may exist between moving components. Death or serious injury will result from becoming trapped between components, buildings, structures, or other obstacles. Make sure there is sufficient clearance around the machine before moving the chassis, booms, or platform. Allow sufficient room and time to stop movement to avoid contact with structures or other hazards.

Always look in the direction of movement.

- Drive with care and at speeds compatible with the work place conditions.
- Use caution when driving over rough ground, on slopes and when turning.
- Do not engage in any form of horseplay or permit riders any place other than in the platform.

Secure all accessories, containers, tools, and other materials in the platform to prevent them from accidentally falling or being kicked off the platform. Remove all objects that do not belong in or on the aerial platform.

Never steady the platform by positioning it against another platform.

⚠Warning

The potential for an accident increases when operating an aerial platform that is damaged or malfunctioning. Death or serious injury could result from such accidents. Do not operate the aerial platform if it is damaged or malfunctioning.

Do not operate the aerial platform if it is damaged or not functioning properly. Qualified maintenance personnel must correct the problem before putting the aerial platform back into service.

Operation

Use three points of support when entering or exiting the platform. For example, use two hands and one foot when climbing into the platform.

Never cover the platform floor grating or otherwise obstruct your view below. Make sure the area below the platform is free of personnel before lowering.

Keep both feet positioned firmly on the platform floor.

- Operate the controls slowly and deliberately to avoid jerky and erratic operation.
- Always stop the controls in neutral before going in the opposite direction.

Do not dismount while the aerial platform is in motion or jump off the platform.

Properly stow the aerial platform and secure it against unauthorized operation at the end of each work day, before transporting, or if it is left unattended.

https://truckmanualshub.com/

Tip-Over and Falling Hazards

Operate the aerial platform only on a firm, flat, level surface capable of withstanding all load forces imposed by the aerial platform in all operating conditions. Refer to the General Specifications chart for the maximum wheel load and ground pressure. Raise the booms only when the aerial platform is on level ground.

⚠Danger

The aerial platform can tip over if it becomes unstable. Death or serious injury will result from a tip-over accident. Do not drive or position the aerial platform for elevated use near any drop-off, hole, slope, soft or uneven ground, or other tip-over hazard.

All platform occupants must wear a fall restraint device connected to a lanyard anchor point.

It is best not to transfer from the platform to another structure or from the structure to the platform, unless that is the safest way to do the job. Judge each situation separately taking the work environment into account. If it is necessary to transfer from the platform to another structure the following guidelines apply:

1. Where possible, place the platform over a roof or walking structure to do the transfer.
2. Transfer your anchorage from one structure to the other before stepping across.
3. Remember that you might be transferring to a structure where *personal fall arrest* is required.
4. Use the platform entrance, do not climb over or through the guardrails.

Do not operate the aerial platform in windy or gusty conditions. Do not add anything to the aerial platform that will increase the wind loading such as billboards, banners, flags, etc.

Never operate the aerial platform without all parts of the guardrail system in place and the gate closed. Make sure that all protective guards, cowlings and doors are securely fastened.

Do not exceed the platform capacity as indicated on the platform rating placard on the platform. Do not carry loads that extend beyond the platform guardrails without prior written consent from Snorkel.

Do not operate the aerial platform from trucks, trailers, railway cars, floating vessels, scaffolds or similar equipment unless the application is approved in writing by Snorkel.

Do not use the aerial platform as a crane, hoist, jack or for any purpose other than to position personnel, tools and materials.

Do not climb on the guardrails or use ladders, planks or other devices to extend or increase the work position from the platform.

Take care to prevent rope, electrical cords, and hoses, etc., from becoming caught in or on the aerial platform.

- If the platform or booms becomes caught on an adjacent structure or other obstacle and is prevented from normal motion, reverse the control to free the platform.
- If control reversal does not free the platform, evacuate the platform before attempting to free it.

Electrical System

Charge the batteries in a well-ventilated area free of flame, sparks or other hazards that might cause fire or explosion.

Do not operate any of the aerial platform functions while the battery charger is plugged in.

⚠Warning

Batteries give off hydrogen and oxygen that can combine explosively. Death or serious injury could result from a chemical explosion. Do not smoke or permit open flames or sparks when checking the batteries.

Battery acid can damage the skin and eyes. Serious infection or reaction can result if medical treatment is not given immediately. Wear face and eye protection when working near the batteries.

- Batteries contain sulfuric acid that can damage your eyes or skin on contact.
- Wear a face shield, rubber gloves, and protective clothing when working around batteries.
- If acid contacts your eyes, flush immediately with clear water and get medical attention.
- If acid contacts your skin, wash off immediately with clear water.

Hydraulic System

The hydraulic system contains hoses with hydraulic fluid under pressure.

⚠Danger

Hydraulic fluid escaping under pressure can have enough force to inject fluid into the flesh. Serious infection or reaction will result if medical treatment is not given immediately. In case of injury by escaping hydraulic fluid, seek medical attention at once.

https://truckmanualshub.com/

Do not place your hand or any part of your body in front of escaping hydraulic fluid. Use a piece of cardboard or wood to search for hydraulic leaks.

Engine and Fuel Handling Precautions

Refer to the engine manufacturer's Operator's Manual for complete information on safe engine operation, maintenance and specifications.

⚠Danger

Engine exhaust contains carbon monoxide, a poisonous gas that is invisible and odorless. Breathing engine exhaust fumes will cause death or serious illness. Do not run the engine in an enclosed area or indoors without adequate ventilation.

Operate dual fuel machines on LPG fuel when indoors to reduce exhaust fumes and carbon monoxide.

Be careful not to run the diesel fuel tank empty. Bleed the fuel system if air enters the lines between the tank and the injection pump.

Allow the engine to return to idle before shutting the engine off.

Do not smoke or permit open flames while fueling or near fueling operations.

Never remove the fuel cap or fill the fuel tank while the engine is running or hot. Never allow fuel to spill on hot machine components.

Maintain control of the fuel filler nozzle when filling the tank. Spilled fuel is a potential fire hazard.

Do not overfill the fuel tank. Allow room for expansion.

Clean up spilled fuel immediately.

Tighten the fuel tank cap securely. If the fuel cap is lost, replace it with an approved cap from Snorkel. Use of a non-approved cap without proper venting may result in pressurization of the tank.

Never use fuel for cleaning purposes.

For diesel engines, use the correct fuel grade for the operating season.

⚠Caution

Engine coolant escaping under pressure may cause serious burns. Shut the engine off and let it cool before removing the radiator cap.

Let the engine and radiator cool before adding coolant.

Placards and Decals

The aerial platform is equipped with placards and decals that provide instruction for operation and accident prevention. Do not operate the aerial platform if any placards or decals are missing or not legible.

https://truckmanualshub.com/

Chapter 4 – Safety Devices

This aerial work platform is manufactured with safety devices, placards, and decals to reduce the likelihood of an accident.

- For the safety of all personnel, do not disable, modify, or ignore any safety device.
- Safety devices are included in the daily prestart inspection.

⚠Warning

The potential for an accident increases when safety devices do not function properly. Death or serious injury could result from such accidents. Do not alter, disable, or override any safety device.

If any safety devices are defective, remove the aerial platform from service until qualified maintenance personnel can make repairs.

Emergency Stop Controls

There is an emergency stop control at the lower and upper controls.

At the lower controls, the emergency stop button is a two-position push button (refer to Figure 4.1).

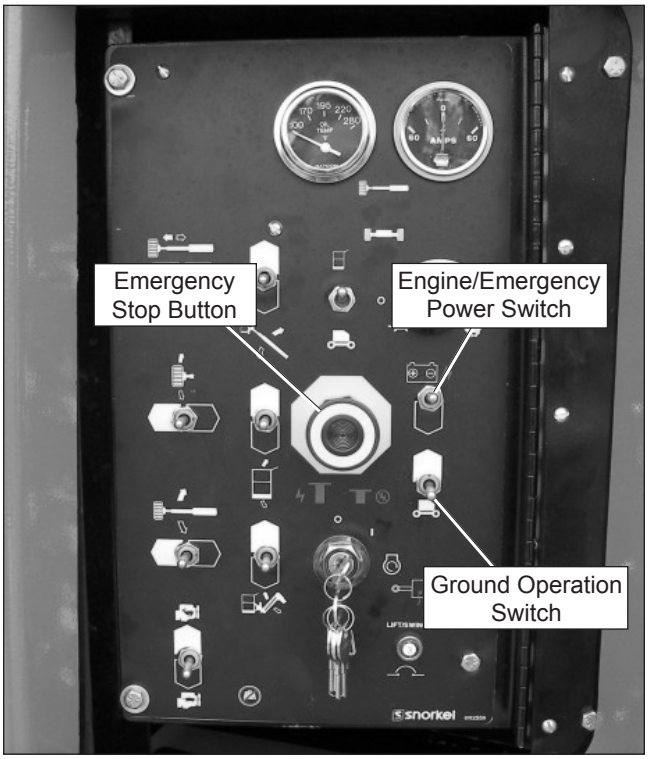

Figure 4.1 – Lower Controls

- Push the emergency stop button inward to disconnect power to all control circuits.
- Pull the button outward to restore power.
- On older machines the emergency stop is a two-position toggle switch with a red safety guard.
- Push the guard down over the toggle switch to disconnect power to all control circuits. Lift the guard and push the switch up to restore power.

Note
The lower controls override the upper controls. If the upper control emergency stop button is engaged, the lower controls can still be used to operate the aerial platform.

At the upper controls, the emergency stop is a two-position push button (refer to Figure 4.2).

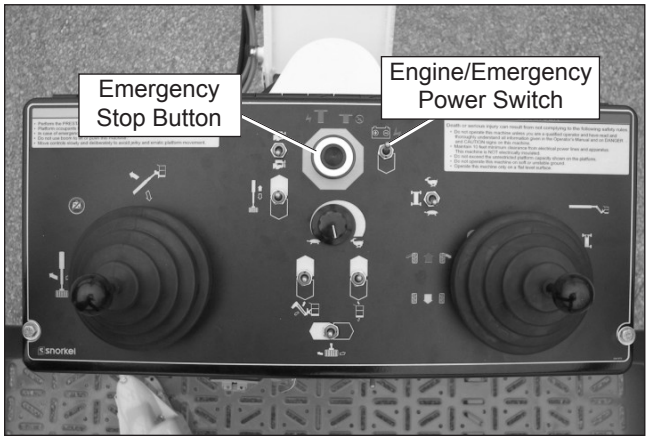

Figure 4.2 – Upper Controls

- Push the emergency stop button inward to disconnect power to the upper control circuits.
- Pull the button outward to restore power.

Emergency Power System

The emergency power system includes a back-up pump, motor, and battery. Use this system to operate the boom and turntable functions to lower the platform if the main power system fails due to engine or pump failure.

⚠Caution

The emergency power system is for emergency lowering and stowing only. The length of time the pump can be operated depends on the capacity of the battery. Do not use this system for normal operation.

- Hold the engine/emergency power switch (refer to Figure 4.1 and 4.2) downward to activate the emergency power system.
- Release the switch to disengage the emergency power system.
- The length of time the pump can be operated depends on the capacity of the battery.

https://truckmanualshub.com/

Emergency Lowering Knob

The emergency lowering knob may be used to lower the booms if the engine will not start and the emergency power system will not work.

The knob is on the base end of the main boom lift cylinder (refer to Figure 4.3) under the left side of the turntable.

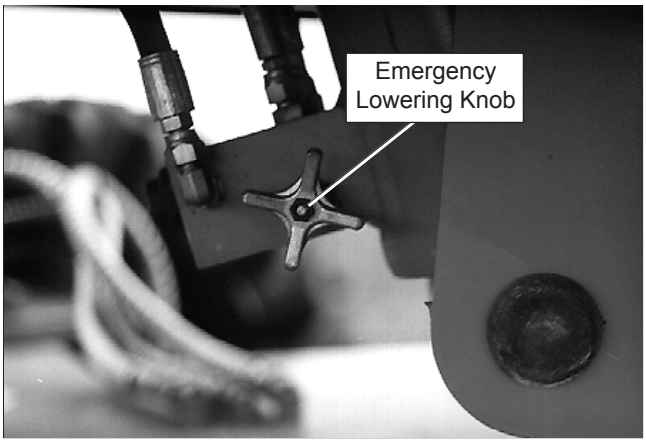

Figure 4.3 – Emergency Lowering Knob

Ground Operation Switch

The ground operation switch (refer to Figure 4.1) prevents boom and platform movement if a control switch on the lower control panel is accidentally moved.

Hold the switch up to operate the machine from the lower controls.

Platform Foot Switch

Step down on the platform foot switch (refer to Figure 4.4) to activate the upper controls.

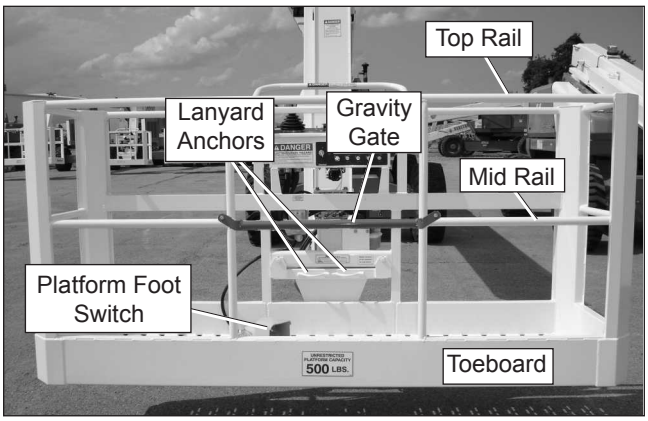

Figure 4.4 – Platform

The foot switch must be engaged and a control must be moved to operate the boom, drive and/or platform from the upper controls.

Guardrails

The guardrails (refer to Figure 4.5) help protect personnel from falling off the platform.

The guardrail system includes:

- A top rail
- A mid rail
- A gravity gate or optional swinging gate
- Optional side entry gravity gate
- Toeboards around the sides of the platform.

The gravity gate(s) allow for access to the platform and close automatically after entering or exiting the platform. After entering the platform check to make sure the gates are fully lowered and even with the mid rail.

The optional swinging gate (refer to Figure 4.5) allows for access to the platform. The gate must be securely latched except when personnel are entering or leaving the platform.

Figure 4.5 – Platform Swing Gate

Lanyard Anchors

Two lanyard anchors for fall restraint anchorage are provided below the upper controls at the front of the platform (refer to Figure 4.4).

Note
The lanyard anchors are not designed for lifting or tying the machine down.

- All personnel in the platform must connect their fall restraint device to a lanyard anchor before raising the platform.
- Attach only one fall restraint device to each lanyard anchor.
- Do not use the aerial platform for *personal fall arrest* anchorage.

https://truckmanualshub.com/

Ground Fault Circuit Interrupter

The electrical power outlet at the platform (refer to Figure 4.6) contains a ground fault circuit interrupter (GFCI) to provide protection for personnel.

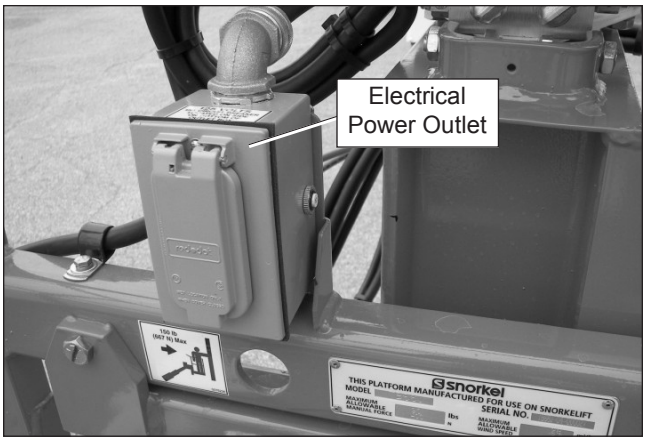

Figure 4.6 – Electrical Outlet

Tilt Alarm

If the aerial platform chassis is out of level more than five degrees when the main boom is raised or extended, an alarm will sound. The tilt alarm is located under the upper control panel.

⚠Danger

The aerial platform can tip over if it becomes unstable. Death or serious injury will result from a tip-over accident. Do not drive or position the aerial platform for elevated use near any drop-off, hole, slope, soft or uneven ground, or other tip-over hazard.

Completely retract and lower the main boom and then drive to a level surface when the tilt alarm sounds.

The tilt alarm is for added protection and does not justify operating on anything other than firm, flat, level surfaces.

Engine Protection Systems

A constant alarm will sound to warn against high engine temperature or low oil pressure.

The engine will shut-down

- if the operating temperature exceeds a preset level
- or if the oil pressure is too low for safe operation.

An engine temperature gauge is on the lower control panel (refer to Figure 4.7).

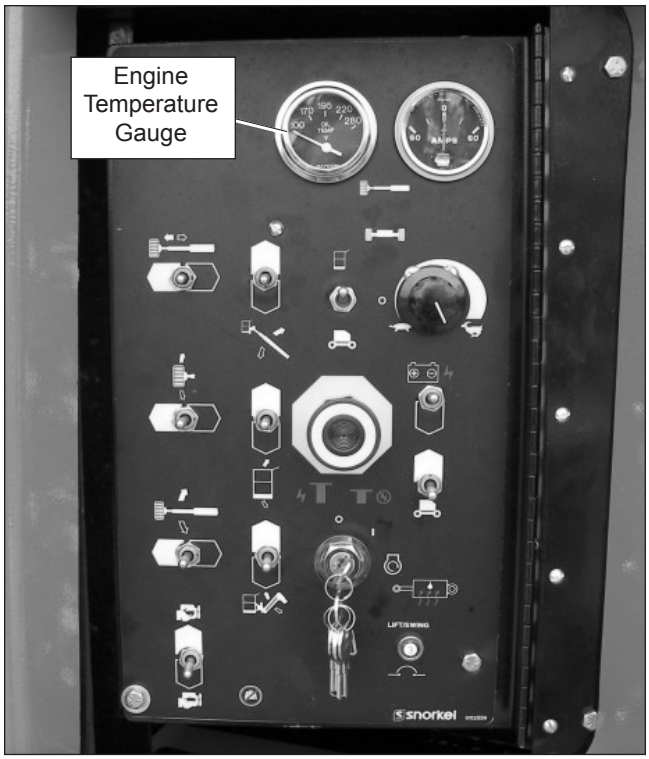

Figure 4.7 – Lower Control Panel

High Engine Temperature Alarm

If the coolant in a Cummins or GM engine exceeds the engine operating temperature an alarm will sound and the engine will shut off.

If the oil in a Deutz engine exceeds 230°F (110°C) an alarm will sound and the engine will shut off. Any time there is no alternator current being produced, an alarm will sound and the engine will shut off. This prevents high engine temperature if the fan belt breaks.

Do not restart the engine until the condition that caused the overheating has been corrected.

Low Oil Pressure Alarm

The low oil pressure alarm sounds when the engine oil pressure is near the lower limit for safe engine operation. If the alarm sounds, lower the platform to the ground and then turn the engine off.

- If the engine oil pressure falls below a safe operating value the engine will shut off.
- The engine can be restarted with low oil pressure, but it will only run for a few seconds before it shuts off again.
- Do not restart the engine until the condition that caused the low oil pressure has been corrected.

https://truckmanualshub.com/

Horn

An optional horn may be used to warn personnel on the ground. The horn button is on the right side of the upper control box.

The horn is operational when the emergency stop button and the start switches are both on, at the lower and the upper controls.

All Motion Alarm

An optional all motion alarm may be provided on the machine. The alarm sounds, in short beeps, anytime the machine functions are being operated. The alarm is used to warn personnel in the work area to stand clear.

Flashing Light

An optional amber flashing light may be located on the top of the boom near the base end (refer to Figure 4.8). The flashing light warns personnel that the aerial platform is in the area.

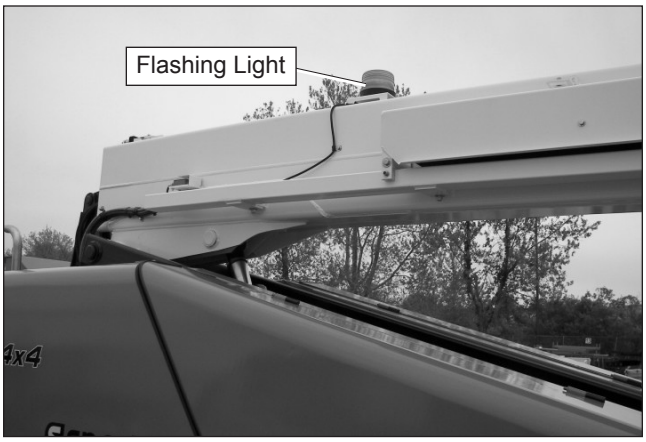

Figure 4.8 – Flashing Light

The light flashes at about one flash per second when the engine is running.

Driving Lights

The optional headlights and blinking tail lights may be used to help improve visibility while driving the aerial platform and help others see it too.

- The headlights are located on the top of the front cowling.
- The tail lights are mounted on the sides of the rear cowling.
- Do not use the driving lights to drive on public roadways.

Platform Work Lights

The optional platform work lights may be used to help improve visibility while working aloft in dimly lit areas.

- The platform work lights are located on the top rail of the platform, one on each side of the upper control panel (refer to Figure 4.9).
- Do not use the platform work lights to drive on public roadways.

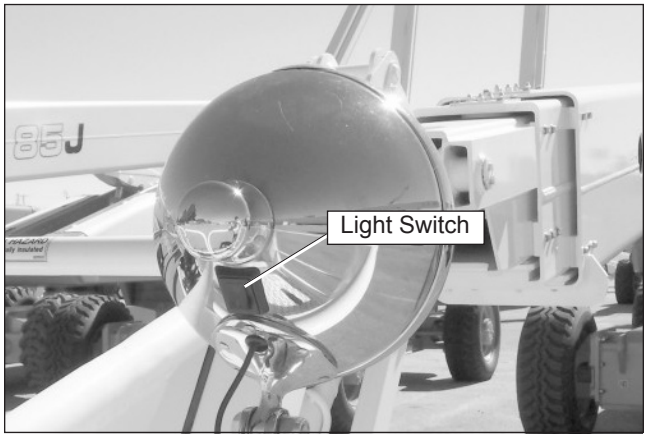

Figure 4.9 – Platform Work Lights

Bump Guard System

The optional bump guard system is a spring mounted padded railing below the platform. There are two infrared lights mounted along the bottom of the platform next to two infrared sensitive switches. The lights shine on reflectors on the bump guard system and are reflected back to the switches.

If the bump guard comes into contact with a stationary object, the bump guard moves and one or both of the light beams is broken, immediately stopping all platform movement.

https://truckmanualshub.com/

Chapter 5 – Gauges and Displays

The aerial platform is equipped with several gauges to monitor the condition of the machine before and during operation.

Hour Meter

The hour meter is located on the wiring box on the left side of the lower controls (refer to Figure 5.1). It measures the accumulated engine operating time.

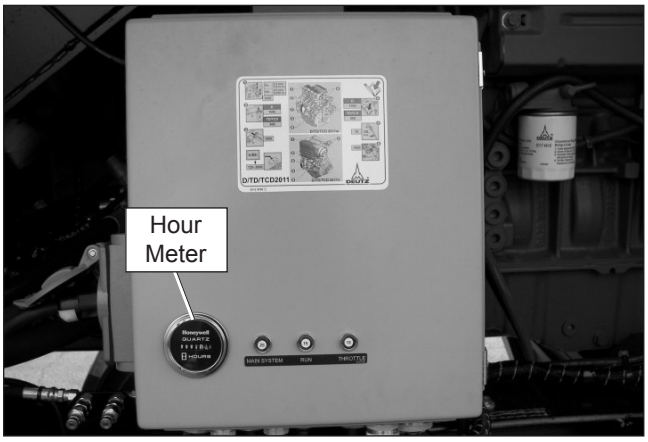

Figure 5.1 – Wiring Box

Engine Temperature Gauge

The temperature gauge is located on the lower control panel (refer to Figure 5.2).

Machines with Kubota engines do not have an engine temperature gauge.

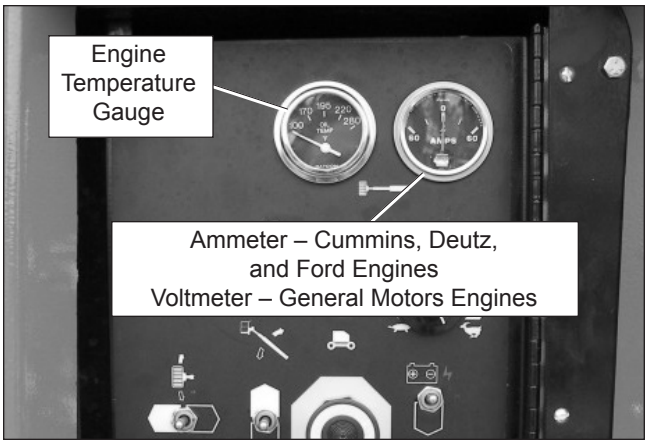

Figure 5.2 – Lower Controls

- The gauge on liquid cooled engines shows the temperature of the water and antifreeze mixture in the engine block.
- The gauge on air cooled engines shows the temperature of the engine oil as the oil leaves the filter.

Ammeter – Cummins, Deutz and Ford Engines

The ammeter is located on the lower control panel (refer to Figure 5.2). The ammeter displays the level of current flow from the alternator to the batteries.

- After the engine has been running for a few minutes under normal operating conditions, the ammeter gauge indicator should read “0.”

Machines with Kubota engines do not have an engine ammeter gauge.

Voltmeter – General Motors Engines

The voltmeter is located on the engine gauge panel above the lower controls. The voltmeter displays battery voltage.

- After the engine has been running for a few minutes under normal operating condition, the voltmeter should indicate between 12.5 and 14 volts.

Engine Air Filter Gauge

The air filter gauge (refer to Figure 5.3) is located on the engine gauge panel above the lower controls.

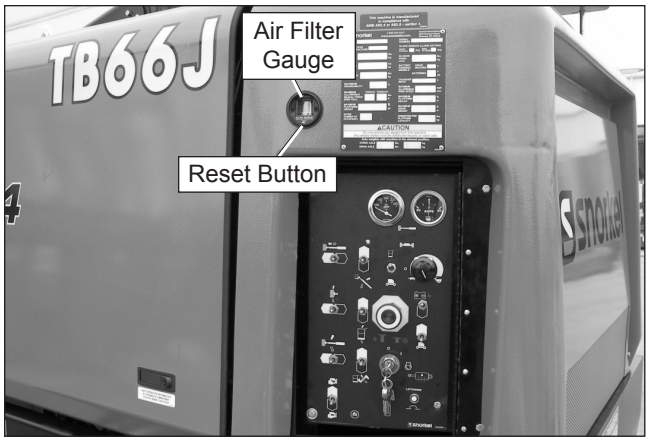

Figure 5.3 – Air Filter Gauge

The air filter gauge measures the air pressure between the intake manifold and the air filter.

- The yellow indicator disk inside the sight glass stays at its highest level when the engine is turned off.
- When the yellow indicator disk reaches the red area, it’s time to change the filter element.
- After changing the filter, press the reset button to reset the indicator disk to the bottom of the sight glass.

Fuel Gauge

The fuel gauge is located on top of the diesel or gasoline tank (refer to Figure 5.4). Access the gauge by opening the door on the right side of the chassis.

https://truckmanualshub.com/

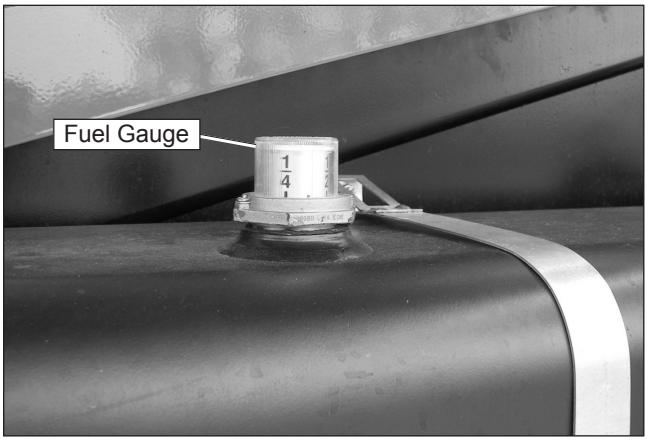

Figure 5.4 – Fuel Tank

- Read the fuel gauge at the line in the clear plastic window.
- The gauge indicates the fuel tank level in fractions of a full tank.

Note
Do not run a diesel fuel tank empty. Air in the fuel line makes the engine hard to start.

LPG tanks have a fuel gauge that has two scales. One scale measures the fuel level when the tank is mounted vertical and the other is used when the tank is mounted horizontal (refer to Figure 5.5).

Figure 5.5 – LPG Tank

- The LPG tank is mounted horizontally behind the rear cowling door on the right side of the machine.
- Read the horizontal scale to determine the fuel level.

Engine Oil

The engine oil level is measured with a dipstick. The dipstick is the only way to accurately determine the engine oil level. The engine oil level should always be between the add and full marks on the dipstick.

Hydraulic Fluid Filter Gauge

The fluid filter gauge (refer to Figure 5.6) is located on the return line filter on the top of the reservoir. The reservoir is behind the door on the left side of the turntable.

- During high pump flow situations, the gauge indicates the condition of the filter.
- When the needle on the gauge is in the red zone, its time to change the filter.

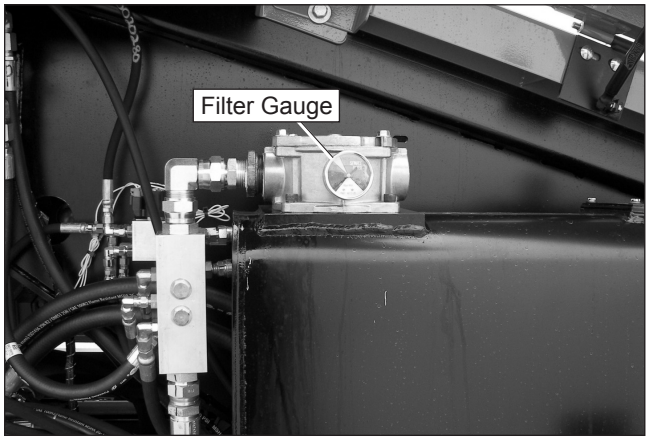

Figure 5.6 – Hydraulic Fluid Filter Gauge

Fluid Level and Temperature Gauge

A sight gauge on the right side of the hydraulic reservoir displays the level and temperature of the hydraulic fluid (refer to Figure 5.7). The reservoir is behind the door on the left side of the machine.

Only read the fluid level when the aerial platform is in the stowed position, booms completely down and retracted. Otherwise, the cylinders act as large reservoirs for hydraulic fluid making the level appear too low.

- The fluid should be between the minimum and maximum lines.
- If the temperature rises above 200°F (93°C) stop machine operation and let the fluid cool before resuming operation.

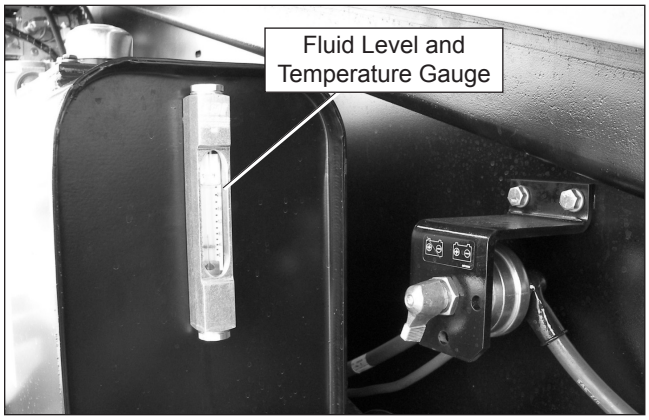

Figure 5.7 – Hydraulic Fluid Filter Gauge

https://truckmanualshub.com/

⚠Danger

Pinch points may exist between moving components. Death or serious injury can result from being trapped between components, buildings, structures, or other obstacles. Make sure all personnel stand clear while operating the aerial platform.

- Controls to position the platform are located on the lower control panel on the turntable and on the upper control panel in the platform.
- Controls to drive the aerial platform are located on the upper control panel only.

Battery Disconnect Switch

The battery disconnect is located behind the door on the left side of the turntable above the batteries (refer to Figure 6.1).

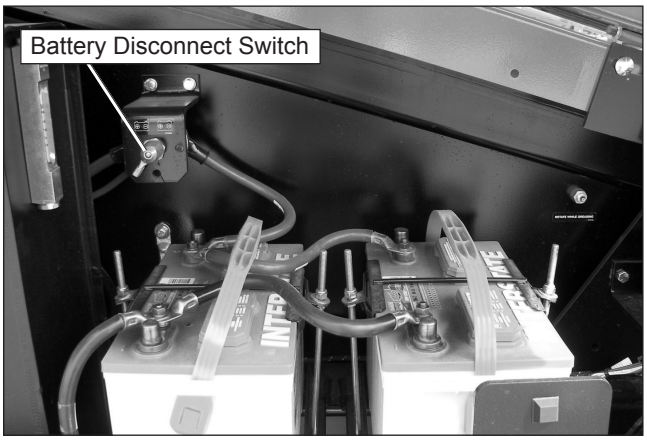

Figure 6.1 – Battery Disconnect Switch

The battery disconnect removes electrical power from all electrically controlled functions when in the off position.

- Place the switch in the on position to electrically connect the battery to the electrical system.

⚠Caution

Only authorized personnel should operate the aerial platform. Unqualified personnel may cause injury to coworkers or property damage. Lock the battery disconnect switch in the off position before leaving the aerial platform unattended.

- Turn the battery disconnect switch off to prevent unauthorized use of the aerial platform.

Lower Controls

The lower controls (refer to Figure 6.2) are located on the right side of the turntable. Boom and platform functions can be operated from the lower controls.

The following are located on the lower control panel.

- Emergency stop button
- Control selector switch
- Start switch
- Ground operation switch
- Rotation switch
- Boom elevation switch
- Boom extend/retract switch
- Jib articulation switch
- Boom speed knob
- Platform level switch
- Platform rotation switch
- Engine/emergency power switch
- Throttle switch
- Fuel switch (dual fuel machines)

Emergency Stop Button

The emergency stop button (refer to Figure 6.2) is a two-position, red push button.

- Push the button inward to disconnect power to all control circuits.
- Pull the button outward to restore power.

On older machines, the emergency stop is a two-position toggle switch with a red safety guard.

- Push the guard down over the toggle switch to disconnect power to all control circuits
- Lift the guard and push the toggle switch up to restore power.

Control Selector Switch

Use the control selector switch (refer to Figure 6.2) to select between the lower control and upper control operation.

- Push the switch upward to operate the aerial platform from the upper controls.
- Push the switch downward to operate the aerial platform from the lower controls.

Start Switch

The start switch (refer to Figure 6.2) works like an automobile ignition switch.

- Hold the switch in the start position until the engine starts, then release it to on.
- If the engine dies, the switch must be turned to off before it can be turned back to start.

An alarm sounds, when the switch is turned on, to warn others that the machine engine is being started.

https://truckmanualshub.com/

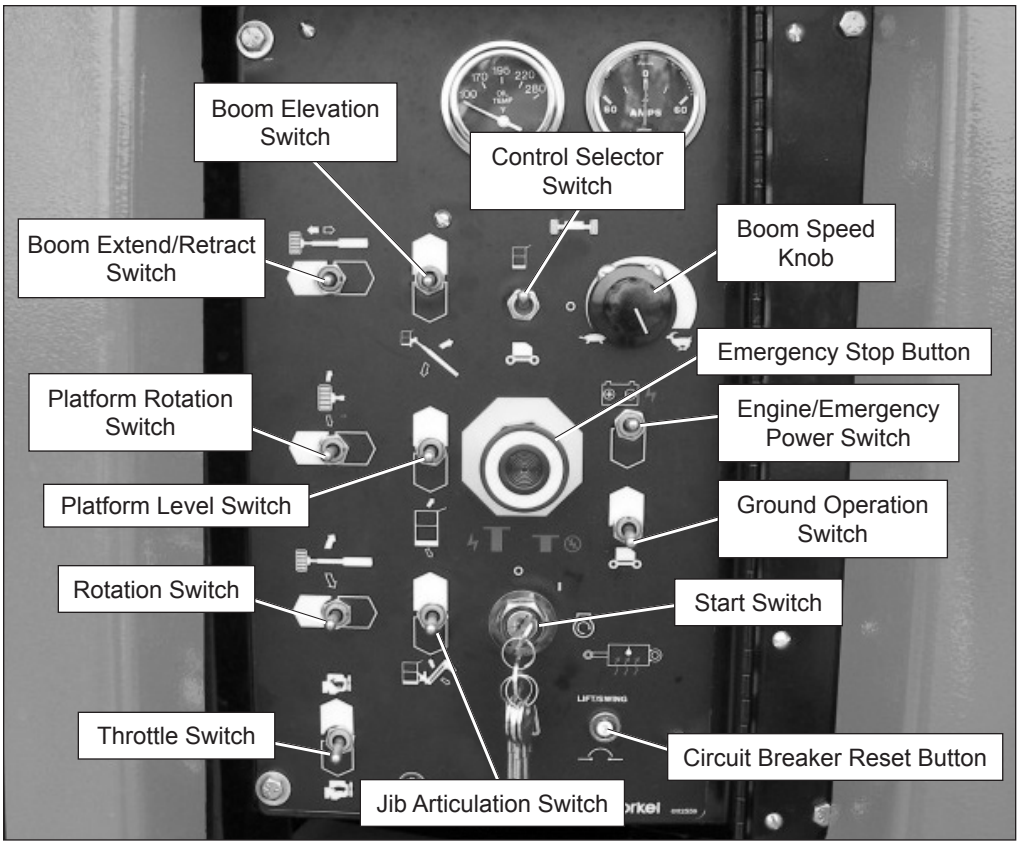

Figure 6.2 – Lower Controls

Note
On some machines it may be necessary to pause about three seconds in the on position before going to start so the starter can engage.

If the platform is to stay in a particular position for a long time, turn the start switch to off to shut off the engine and save fuel.

Ground Operation Switch
The ground operation switch (refer to Figure 6.2) is used to operate the machine from the lower controls. The switch is spring returned to the off position.

- Hold the ground operation switch upward continually to operate the machine from the lower controls.
- The engine speed increases when the switch is held upward.

Rotation Switch
The rotation switch (refer to Figure 6.2) is used to rotate the turntable in a clockwise or counterclockwise direction. The switch is spring returned to the center off position.

- Hold the switch to the right to rotate the turntable counterclockwise.
- Hold the switch to the left to rotate the turntable clockwise.

Boom Elevation Switch
The boom elevation switch (refer to Figure 6.2) is used to raise or lower the main boom. The switch is spring returned to the center off position.

- Hold the switch up to raise the main boom.
- Hold the switch down to lower the main boom.

Boom Extend/Retract Switch
The boom extend/retract switch (refer to Figure 6.2) is used to extend or retract the booms. The switch is spring returned to the center off position.

- Hold the switch to the left to extend the tip boom.
- Hold the switch to the right to retract the tip boom.

Jib Articulation Switch
The jib switch (refer to Figure 6.2) is used to raise or lower the jib. The switch is spring returned to the center off position.

- Hold the switch up to raise the jib.
- Hold the switch down to lower the jib.

https://truckmanualshub.com/

Boom Speed Knob
The boom speed knob (refer to Figure 6.2) is used to control the speed of the following boom functions:

- Main boom raise/lower
- Jib boom raise/lower
- Boom extend/retract
- Platform level up/down
- Turntable rotation clockwise/counterclockwise

Set the knob to slow when beginning a movement. The speed may be increased by slowly rotating the knob toward fast. For smooth operation, rotate the knob to slow when ending movement.

Platform Level Switch
The platform level switch (refer to Figure 6.2) is used to level the platform floor with respect to the ground. The switch is spring returned to the center off position.

- Hold the switch upward to tilt the platform floor upward or away from the ground.

- Hold the switch downward to tilt the platform floor downward or toward the ground.

Platform Rotation Switch
The platform rotation switch (refer to Figure 6.2) is used to rotate the platform relative to the end of the tip boom. The switch is spring returned to the center off position.

- Hold the switch to the right to rotate the platform counterclockwise.

- Hold the switch to the left to rotate the platform clockwise.

Engine/Emergency Power Switch
The engine/emergency power switch (refer to Figure 6.2) is used to operate turntable, boom, and platform functions using the emergency power system. The switch is spring returned to the engine position for aerial platform engine operation.

⚠Caution

The emergency power system is for emergency lowering and stowing only. The length of time the pump can be operated depends on the capacity of the battery. Do not use this system for normal operation.

- Hold the engine/emergency power switch downward to activate the emergency power system.

- Release the switch to disengage the emergency power system.

Note
The emergency power system is for lowering the platform during an emergency and is not intended for normal machine operation.

If the engine is running, it will stop when the switch is placed in the emergency power position.

Throttle Switch
The throttle switch (refer to Figure 6.2) is used to set the engine throttle speed to either low or high idle.

- Place the switch in the low position before starting the engine.

- Place the switch in the high position for machine operation and for engine and/or hydraulic system warm-up.

The engine has a two speed throttle operation from the lower controls.

- Place the throttle switch is in the low position to idle the engine.

- Place the switch in the high position to increase the engine speed to mid-range.

- Placing the ground controls switch in the on position also increase the engine speed to mid-range

Fuel Switch
Engines on machines with the dual fuel option can be operated using gasoline or liquefied petroleum gas (LPG). Dual fuel machines have a gasoline tank and an LPG tank behind the door on the right side of the turntable.

The fuel switch may be used to select between gasoline and LPG operation.

- Place the switch downward to operate the engine using gasoline.

- Place the switch upward to operate the engine using LPG.

Hydraulic System Warm-up Switch
The optional hydraulic fluid warm-up switch is used to warm the hydraulic fluid when the ambient temperature is below 32°F (0°C) and boom movement is sluggish because of cold fluid.

⚠Caution

Not all hydraulic fluid is suitable to use in the hydraulic system. Some have poor lubricating characteristics and may increase component wear. Only use hydraulic fluid as recommended.

Use cold weather hydraulic oil as recommended in the machine General Specifications in temperatures of 10°F (-12°C) or below.

The toggle switches for the warm-up system are on the lower control panel and on the front of the upper control panel.

https://truckmanualshub.com/

Note
Machine functions are not operational while using the hydraulic warm-up system.

To warm-up the hydraulic fluid from the lower controls:

1. Start the engine from the lower controls.
2. Place the hydraulic fluid warm-up switch in the on position.
   - The engine throttle speed will increase to warm the hydraulic fluid.
   - The engine throttle speed will decrease and return to idle once the hydraulic fluid reaches a preset temperature.
   - If the warm-up switch is left on the engine speed will continue to increase and decrease to keep the hydraulic fluid at a preset temperature.
3. When the engine throttle speed returns to idle, place the hydraulic fluid warm-up switch in the off position.

Circuit Breaker Reset Buttons

The wiring box has a circuit breaker for the main and run circuits. There is a reset button for each circuit breaker on the front of the wiring box (refer to Figure 6.3).

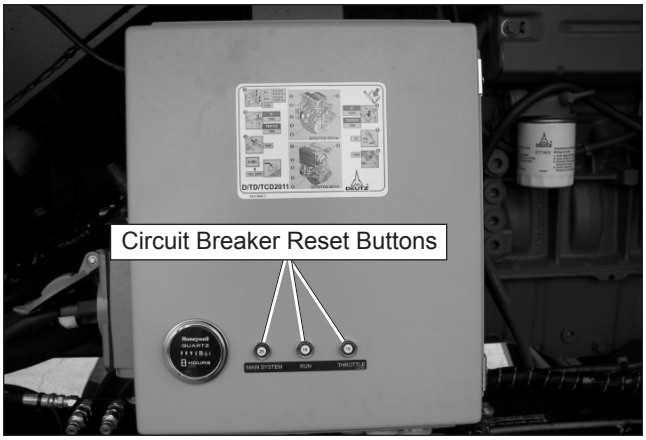

Figure 6.3 – Wiring Box

The upper control panel has a circuit breaker for the swing (turntable rotation), lift, drive and main control circuits. The circuit breakers are on the front of the upper control panel (refer to Figure 6.4).

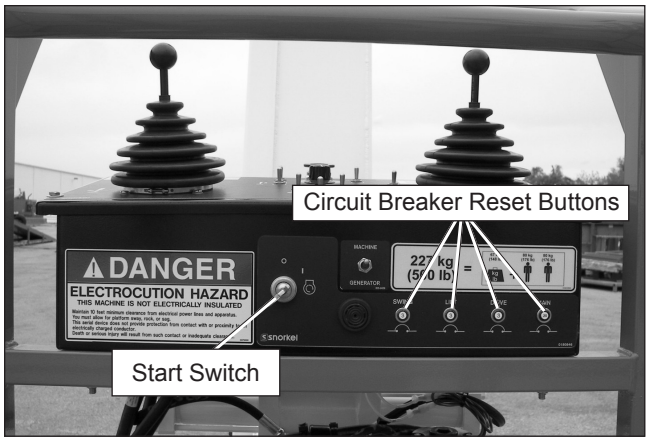

Figure 6.4 – Upper Control Panel Front

The electrical power outlet at the platform has a 15 amp circuit breaker. The reset button is on the right side of the electrical box (refer to Figure 6.5).

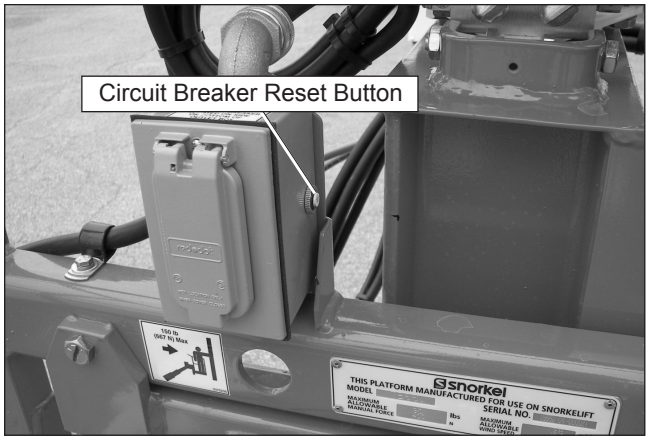

Figure 6.5 – Electrical Power Outlet

The circuit breakers protect the electrical wiring and components from electrical overload in case of a short circuit or other fault.

⚠Caution

A tripped circuit breaker indicates a malfunction in the electrical system. Component damage can result if the cause of the malfunction is not corrected. Do not operate the aerial platform if the circuit breaker trips repeatedly.

Push the button to reset the circuit breaker.

Upper Controls

The upper controls (refer to Figure 6.6) are located on the control panel at the platform. Boom, platform, and drive functions can be operated from the upper controls.

https://truckmanualshub.com/

The following controls are located on the upper control panel.

- Start switch
- Emergency stop button
- Boom joystick
- Boom extension switch
- Jib articulation switch
- Boom speed knob
- Drive joystick
- Drive range switch
- Platform level switch
- Platform rotate switch
- Engine/emergency power switch
- Throttle switch
- Hydraulic system warm-up (option)

Start Switch
The engine can be started from the platform using the anti-restart master switch on the front of the upper control panel (refer to Figure 6.6). This switch is similar to an automobile ignition switch.

- Turn the switch to start until the engine starts, then release it to on.

- If the engine dies, the switch must be turned to off before it can be turned back to start.

An alarm sounds when the switch is turned on to warn others that the machine engine is being started.

Note
On some machines it may be necessary to pause about three seconds in the on position before going to start so the starter can engage.

If the platform is to stay in a particular position for a long time, turn the switch to off to shut off the engine and save fuel

Emergency Stop Button
The emergency stop is a two-position, red push button on the top of the upper control panel (refer to Figure 6.6).

- Push the button inward to disconnect power to all control circuits at the upper controls.

- Pull the button outward to restore power.

Note
The lower controls override the upper controls. If the upper control emergency stop button is engaged the lower controls can still be used to operate the aerial platform.

- Push the emergency stop button inward when the upper controls are not in use to protect against unintentional operation.

Drive Joystick
The drive joystick (refer to Figure 6.6) is used to control forward and reverse motion of the aerial platform. It is also used to steer the machine. The steering and drive functions may be operated simultaneously.

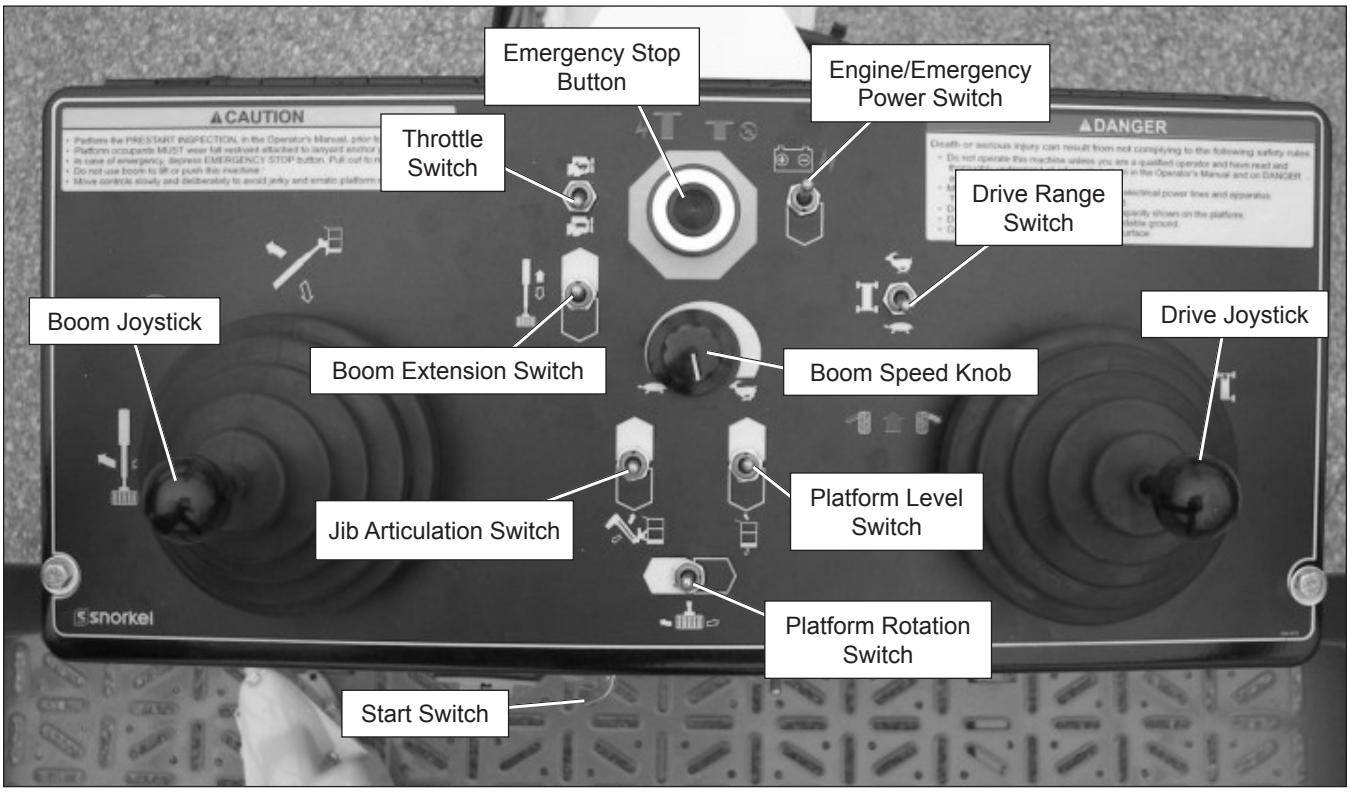

Figure 6.6 – Upper Controls

https://truckmanualshub.com/

Note
The distance the joystick is moved is proportional to the speed of the function.

- To move the aerial platform forward, hold the joystick forward as indicated by the directional arrows on the chassis.
- To move the aerial platform backward, hold the joystick backward as indicated by the directional arrows on the chassis.
- To steer to the right, hold the joystick to the right as indicated by the directional arrows on the chassis.
- To steer to the left, hold the joystick to the left as indicated by the directional arrows on the chassis.

Note
The steering wheels are not self-centering. Set the steering wheels straight ahead after completing a turn.

Drive Range Switch
The drive range switch (refer to Figure 6.6) has two positions to select drive wheel operation:

- High range – high speed and low torque operation.
- Low range – low speed and high torque operation.

Boom Joystick
The boom joystick (refer to Figure 6.6) is used to raise and lower the main boom and to rotate the turntable. The boom and turntable functions may be operated simultaneously.

Note
The distance the joystick is moved is proportional to the speed of the function.

- Hold the joystick forward to raise the main boom and backward to lower the boom.
- Hold the joystick to the right to rotate the turntable counterclockwise and to the left to rotate the turntable clockwise.

Boom Extension Switch
The boom extension switch (refer to Figure 6.6) is used to extend or retract the tip and intermediate booms. The switch is spring returned to the center off position.

- Hold the switch backward to extend the booms.
- Hold the switch forward to retract the booms.

Jib Articulation Switch
The jib switch (refer to Figure 6.6) is used to raise or lower the jib. The switch is spring returned to the center off position.

- Hold the switch forward to raise the jib.
- Hold the switch backward to lower the jib.

Platform Level Switch
The platform level switch (refer to Figure 6.6) is used to level the platform floor with respect to the ground. The switch is spring returned to the center off position.

- Hold the switch forward to tilt the platform floor upward or away from the ground.
- Hold the switch backward to tilt the platform floor downward or toward the ground.

Platform Rotation Switch
The platform rotation switch (refer to Figure 6.6) is used to rotate the platform relative to the end of the tip boom. The switch is spring returned to the center off position.

- Hold the switch to the left to rotate the platform clockwise.
- Hold the switch to the right to rotate the platform counterclockwise.

Boom Speed Knob
Use the boom speed control knob (refer to Figure 6.6) to control the speed of the following boom functions.

- Jib boom raise/lower
- Boom extend/retract
- Platform level up/down

Set the knob to slow when beginning a boom movement. The speed may be increased by slowly rotating the knob toward fast. For smooth operation, rotate the knob to slow when ending boom movement.

Throttle Switch
The throttle switch (refer to Figure 6.6) is used to set the engine throttle speed to either low or high idle.

- Place the switch in the low position for normal machine operation.
- Place the switch in the high position to drive at maximum speed.

The engine may have two or three speed throttle operation.

On machines with a two speed throttle:

- With the throttle switch in the low position, the engine will operate at low speed only. Operation will be

https://truckmanualshub.com/

quieter and the engine will consume less fuel than at high throttle operation.

- High engine speed is obtained when the main boom is horizontal, the foot switch is depressed, the throttle switch is in the high position, and the drive joystick is moved out of neutral into the forward or reverse position.

On machines with three speed throttle:

- Press down on the platform foot switch to increase the engine speed from low to mid-range, independent of the throttle switch.
- High engine speed is obtained when the main boom is horizontal, the foot switch is depressed, the throttle switch is in the high position, and the drive joystick is moved out of neutral into the forward or reverse position.
- Place the throttle switch place in the low position to drive the machine in mid-range engine speed.

Engine/Emergency Power Switch
The engine/emergency power switch (refer to Figure 6.6) is used to operate turntable, boom, and platform functions using the emergency power system. The switch is spring returned to the engine position for aerial platform engine operation.

⚠Caution

The emergency power system is for emergency lowering and stowing only. The length of time the pump can be operated depends on the capacity of the battery. Do not use this system for normal operation.

- Hold the engine/emergency power switch backward to activate the emergency power system.
- Release the switch to disengage the emergency power system.

Note
The emergency power system is for lowering the platform during an emergency and is not intended for normal machine operation.

If the engine is running, it will stop when the switch is placed in the emergency power position.

Platform Foot Switch

The upper controls are interlocked through the platform foot switch (refer to Figure 6.7).

Figure 6.7 – Platform

Step down on and hold the platform foot switch to activate the drive and boom functions from the upper controls.

Machine/Generator Switch

The switch for the optional AC generator is located on the front of the upper control panel (refer to Figure 6.8).

Figure 6.8 – Upper Control Front

- With the engine running, place the switch in the generator position to provide electrical power to the electrical outlet at the platform.
- Place the switch in the machine position to turn off the generator and resume machine operation.

Machine functions will not operate while the switch is in the generator position.

Hydraulic System Warm-up Switch

The optional hydraulic fluid warm-up switch is used to warm the hydraulic fluid when the ambient temperature is below 32°F (0°C) and boom movement is sluggish because of cold fluid.

https://truckmanualshub.com/

⚠Caution

Not all hydraulic fluid is suitable to use in the hydraulic system. Some have poor lubricating characteristics and may increase component wear. Only use hydraulic fluid as recommended.

Use cold weather hydraulic oil as recommended in the machine General Specifications in temperatures of 10°F (-12°C) or below.

The toggle switches for the warm-up system on the lower control panel and one on the upper control panel.

Note
Machine functions are not operational while using the hydraulic warm-up system.

To warm-up the hydraulic fluid from the upper controls:

1. Start the engine from the upper controls.
2. Place the hydraulic fluid warm-up switch in the on position.
   - The engine throttle speed will increase to warm the hydraulic fluid.
   - The engine throttle speed will decrease and return to idle once the hydraulic fluid reaches a preset temperature.
   - If the warm-up switch is left on the engine speed will continue to increase and decrease to keep the hydraulic fluid at a preset temperature.
3. When the engine throttle speed returns to idle, place the hydraulic fluid warm-up switch in the off position.

Driving and Platform Work Lights

The control for the optional driving lights is on the back of each light. Place the switch in the on position to operate the driving lights.

The control for the optional platform work lights is on the back of each light (refer to Figure 6.9).

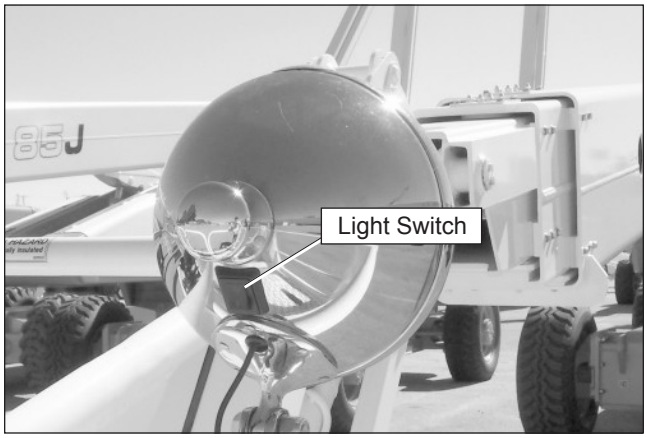

Figure 6.9 – Platform Work Lights

Horn Button

The button for the optional horn is on the right side of the upper control panel (refer to Figure 6.10).

Press the button to sound the horn.

Figure 6.10 – Upper Controls

https://truckmanualshub.com/

Chapter 7 – Prestart Inspection

Potential service and safety problems may be detected by inspecting the aerial platform. This chapter includes information on properly inspecting the aerial platform and includes a prestart inspection check list at the end of the chapter to ensure that no areas are overlooked.

⚠Warning

The potential for an accident increases when operating an aerial platform that is damaged or malfunctioning. Death or serious injury could result from such accidents. Do not operate the aerial platform if it is damaged or malfunctioning.

Perform a prestart inspection at the beginning of each shift, before using the aerial platform on the job. The inspection site must have a smooth and level surface.

Operator's Manual

The manual holder is located behind the front cowling door (refer to Figure 7.1) on the right side of the machine.

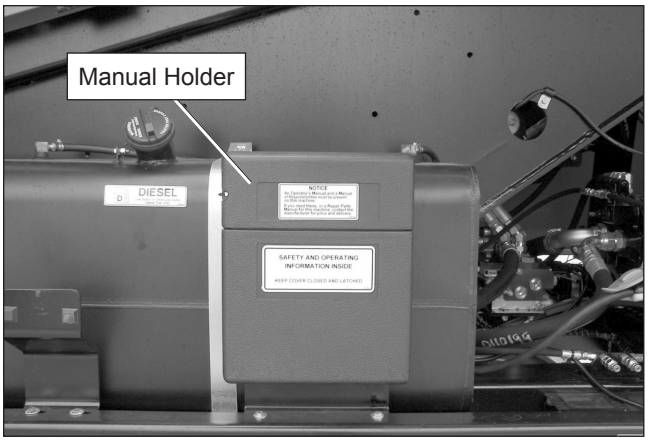

Figure 7.1 – Operator's Manual Holder

To inspect the operator's manual and manual holder:

1. Make certain the Operator's Manual holder is securely fastened in place.
2. Check to see that the proper Operator's Manual is in the holder.
3. Check to see that the manual is complete with all pages intact and in readable condition.
4. Make certain ANSI publication "Manual of Responsibilities for Dealers, Owners, Users, Operators, Lessors and Lessees of ANSI/SIA A92.5-2006 Boom-Supported Elevating Work Platforms" is in the manual holder.

Engine

Visually inspect the engine and its components with the engine off. The engine is located behind the doors at the front of the machine (refer to Figure 7.2).

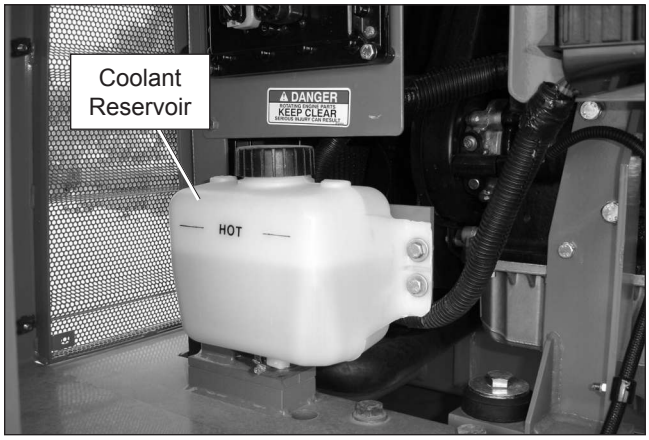

Figure 7.2 – Engine Compartment

To inspect the engine:

1. Open the engine compartment doors and visually inspect the engine and its components with the engine off.
2. Inspect the latch mechanisms to make certain they are in good working condition to hold the engine compartment door closed.
3. Make sure that the engine compartment door is fully closed and latched before operating the machine after inspection or service.

Oil Level

The proper oil level is between the two marks on the dipstick.

To inspect the oil level:

1. Make sure the engine has been off for at least five minutes before checking the oil level. This will allow time for the oil to drain to the pan for a more accurate oil level reading.
2. Remove the dipstick and check to see that the oil level is between the two marks.
3. If necessary, add oil before starting the engine.

Note
Refer to Chapter 2 for the correct engine oil grade and weight.

Coolant

Cummins, Ford and GM engines are liquid cooled (refer to Figure 7.2).

https://truckmanualshub.com/

- When the engine is cold, there should be about 1″ (2.5 cm) of coolant in the bottom of the reservoir.
- When the engine is at operating temperature, the coolant should be at the Hot level.

To inspect the coolant level:

⚠Caution

Engine coolant escaping under pressure may cause serious burns. Shut the engine off and let it cool before removing the radiator cap.

1. Shut the engine off and wait for it to cool.
2. Check to make sure there is about 1″ (2.5 cm) of coolant in the bottom of the reservoir.
3. If necessary, remove the cap from the coolant reservoir and add coolant. Tightly replace the cap.

Note
Refer to Chapter 2 for engine coolant specifications. The need to regularly add fluid indicates a leak that should be corrected.

Deutz engines are air cooled.

To inspect the air intake:

1. Visually inspect the air intake and fan (refer to Figure 7.3) to be sure they are free of obstructions that could stop or slow the flow of air.

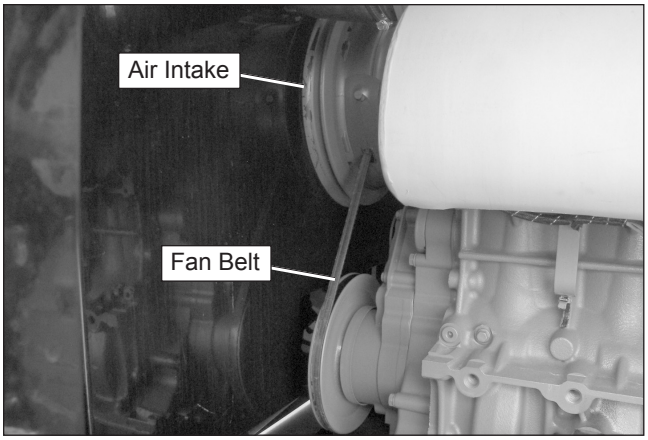

Figure 7.3 – Air Intake

2. Inspect the fan belt to see that it is in place and not cracked.

Radiator
To inspect the radiator:

1. Inspect the radiator hoses and clamps for wear, leakage, or damage (refer to Figure 7.2).
2. Make sure the hoses are not hardened, cracked, or feel spongy.
3. Make sure the cap is in place and tight.
4. Check under the chassis for coolant that has leaked. Coolant leaks are easily visible on the ground.
5. Make sure the radiator core and ventilation openings on the cover are free of bugs, dirt, or foreign material that might restrict airflow.

Fuel Tank
The fuel level gauge is behind the doors on the right side of the chassis (refer to Figure 7.4). The gauge shows the actual level of fluid in the tank.

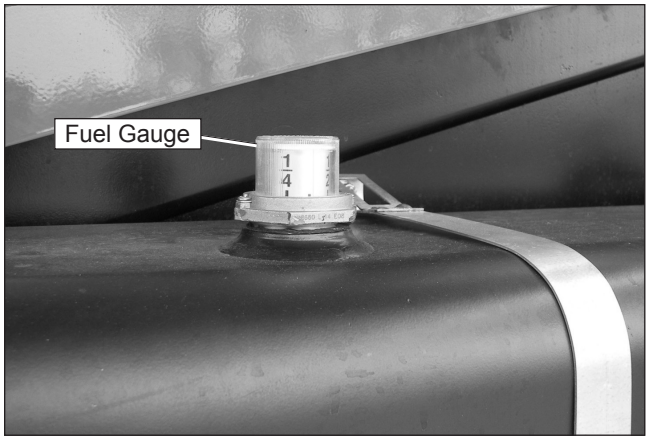

Figure 7.4 – Fuel Tank

To inspect the fuel tank:

1. Open the doors on the right side of the chassis to access the fuel gauge.
2. Check fuel level indicated on the gauge.
3. If necessary, remove the cap and add fuel.

Note
Refer to Chapter 2 for fuel grade specifications.

4. Make sure the cap is securely fastened.

Use the following procedure to change the LPG tank.

1. Close the shutoff valve (refer to Figure 7.5).

https://truckmanualshub.com/

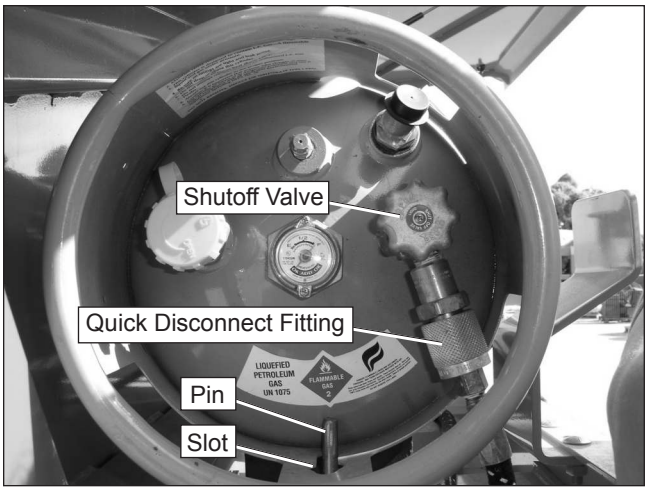

Figure 7.5 – LPG Tank

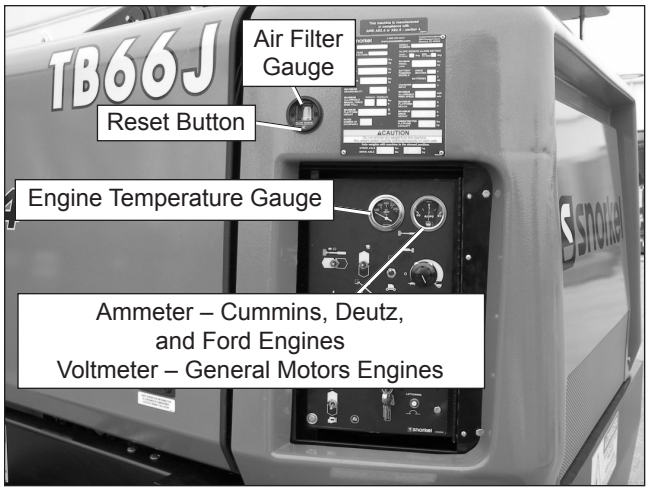

Figure 7.6 – Gauges at Lower Controls

2. Remove the fuel line from the tank using the quick disconnect fitting.
3. Pull on each latch to release the straps from the tank.
4. Carefully lift the tank from the cradle.
5. Place a full tank in the cradle, making sure the slot in the tank aligns with the pin.
6. Latch both straps to secure the tank.
7. Connect the fuel line and open the shutoff valve.

Fuel Line
To inspect the fuel line:

1. Visually inspect the entire length of the fuel line starting at the fuel tank.
2. Trace the line to the engine, inspecting for leaks and damage.

Air Filter
The air filter gauge (refer to Figure 7.6) has an indicator to show when the filter needs replaced.

To inspect the air filter:

1. Turn the battery disconnect switch on and close the cowling door.
2. On dual fuel machines, set the fuel switch to either LPG or gasoline.
3. At the lower controls, pull the emergency stop button outward.
4. Insert the key into the start switch and turn the engine on.
5. Check the clear zone after running the engine for 30 seconds.
   - If the indicator is in the red area, replace the filter.
   - If the indicator is in the clear area, the filter is OK.
6. Shut off the engine.

Charging System
When the engine is running, the ammeter needle (refer to Figure 7.6) should be to the right of “0.” Left of the “0” is discharging.

On machines with General Motors engines, when the engine is running, the voltmeter should indicate between 12.5 and 14 volts.

Cold Weather Start Kit
If the machine is equipped with an optional engine block heater, radiator hose in-line heater, visually inspect the heater and power cord. Inspect for leaks around the heater and for damage to the power cord.

https://truckmanualshub.com/

Electrical System

Electrical power is supplied from either one or two, 550 CCA, 12 volt batteries (refer to figure 7.7). These batteries supply 12 volt DC electrical power to operate the aerial platform electrical and electrohydraulic components, including the emergency power system.

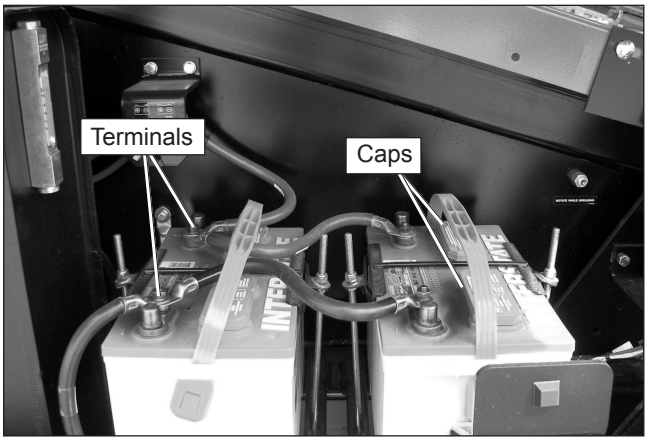

Figure 7.7 – Batteries

Machines with gasoline engines have one battery and machines with diesel engines have two batteries. The batteries are behind the door on the left side of the turntable.

⚠Warning

Batteries give off hydrogen and oxygen that can combine explosively. Death or serious injury could result from a chemical explosion. Do not smoke or permit open flames or sparks when checking the batteries.

⚠Caution

Even with low voltage electrical systems, severe arcing can occur. Electrical shock or component damage may result from contact with energized conductors. Use caution when working with any electrical device.

The batteries are automatically charged when the engine is running. Include batteries when inspecting and servicing the electrical system.

For optimal battery performance the battery fluid level must be maintained and the battery connections must be kept clean.

Battery Fluid Level

To inspect the battery fluid level:

1. Remove the caps from the battery (refer to Figure 7.7).
2. Visually check the battery fluid level making sure the level is within ¼″ (6 mm) of the bottom of the filler neck inside each hole.
3. If necessary, add distilled water.

Note

Use only distilled water when refilling the battery. Tap water may contain metallic solids such as iron which can reduce the life of the battery.

4. Replace the caps on the battery. The caps must be in place and tight during machine operation.

Battery Terminals

To inspect the battery terminals:

1. Check the top of the battery, the terminals, and cable ends (refer to Figure 7.7). They should be clean and free of corrosion.
2. If necessary, clean the top of the battery. Clean the terminals and cable ends with a wire brush or terminal cleaning tool.
3. Make sure all cable ends are securely fastened to the terminals.

Cables and Wiring Harness

To inspect the cables and wiring harness:

1. Visually inspect all cables and wiring for wear and/or physical damage such as loose connections, broken wires, and frayed insulation.
2. Check the wiring in areas where a change in routing direction may cause them to become pinched.
3. Make sure the cables and wires are properly routed to avoid sharp edges, pinching, and scuffing.

Hydraulic System

Hydraulic power is supplied from an engine driven variable displacement piston pump.

⚠Danger

Hydraulic fluid escaping under pressure can have enough force to inject fluid into the flesh. Serious infection or reaction will result if medical treatment is not given immediately. In case of injury by escaping hydraulic fluid, seek medical attention at once.

The hydraulic reservoir is behind the door on the left side of the turntable. The pump is mounted on the engine.

Fluid Level

To inspect the fluid level:

1. Place the aerial platform on a level surface with the platform fully stowed.

https://truckmanualshub.com/

2. Open the door on the right side of the chassis to access the hydraulic fluid level gauge (refer to Figure 7.8).

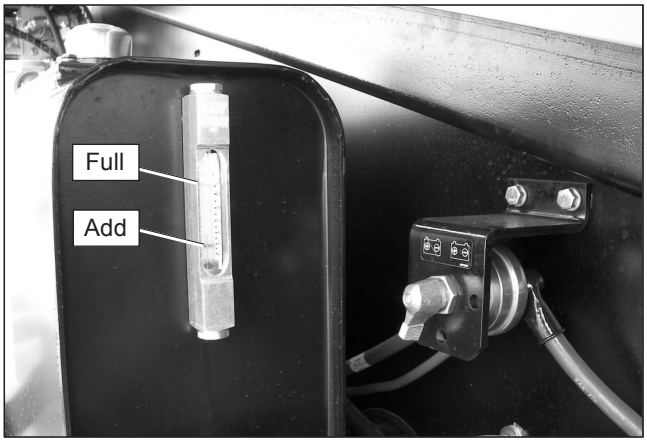

Figure 7.8 – Hydraulic Fluid Gauge

3. Make sure the fluid level is between the minimum and maximum lines.

⚠Caution

Not all hydraulic fluid is suitable to use in the hydraulic system. Some have poor lubricating characteristics and may increase component wear. Only use hydraulic fluid as recommended.

4. If necessary, remove the filler cap and add fluid of the proper type. Replace the cap making sure it is tightly in place.

Note
Refer to Chapter 2 for the proper type and grade of hydraulic fluid to use. The need to regularly add fluid indicates a leak that should be corrected.

5. The sight glass on the reservoir has an internal thermometer to measure the fluid temperature. The temperature should be less than 200°F (93°C).

Fluid Filter
Checking the condition of the hydraulic fluid filter is part of the machine maintenance schedule and should not be performed by the operator.

Hoses, Tubes, and Fittings
To inspect the hoses, tubes and fittings:

1. Inspect all hydraulic hoses, tubes, and fittings for wear, leakage, or damage (refer to Figure 7.9).

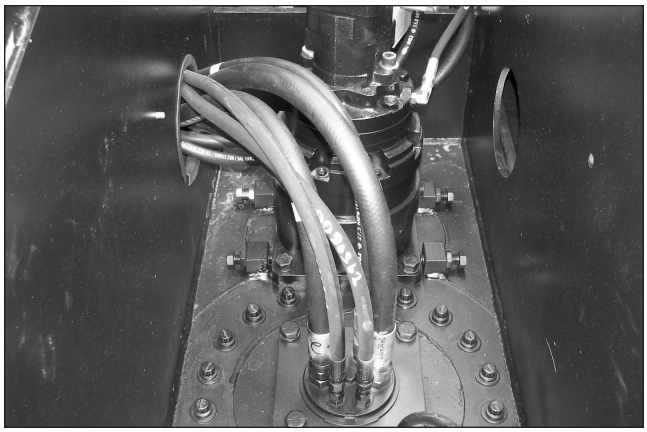

Figure 7.9 – Hoses, Tubes, and Fittings

2. Make sure the hoses are properly routed to avoid sharp edges, kinking, and scuffing.

3. Inspect the tubes for dents or other damage that may restrict fluid flow.

4. Make sure all hoses and tubes are held firmly in their support brackets.

5. Check under the chassis for fluid that has leaked. Hydraulic fluid leaks are easily visible on the ground.

Tires and Wheels

Visually inspect the tires and wheels (refer to Figure 7.10) to make sure they are suitable for service.

Figure 7.10 – Tires and Wheels

Foam filled tires do not have a pressure decal or a valve core.

To inspect foam filled tires and wheels:

1. Check the wheel lug nuts to see that none are missing, damaged, or loose.

https://truckmanualshub.com/

2. Carefully inspect for large holes or cuts where foam is coming out of the tire.

3. Look for large imbedded objects, such as angle iron, that can rip a tire open.

Note
Punctures caused by bolts, screws, or nails are not a problem for foam filled tires.

Lower Control Station

With no personnel in the platform, test the operation of each control from the lower controls (refer to Figure 7.11).

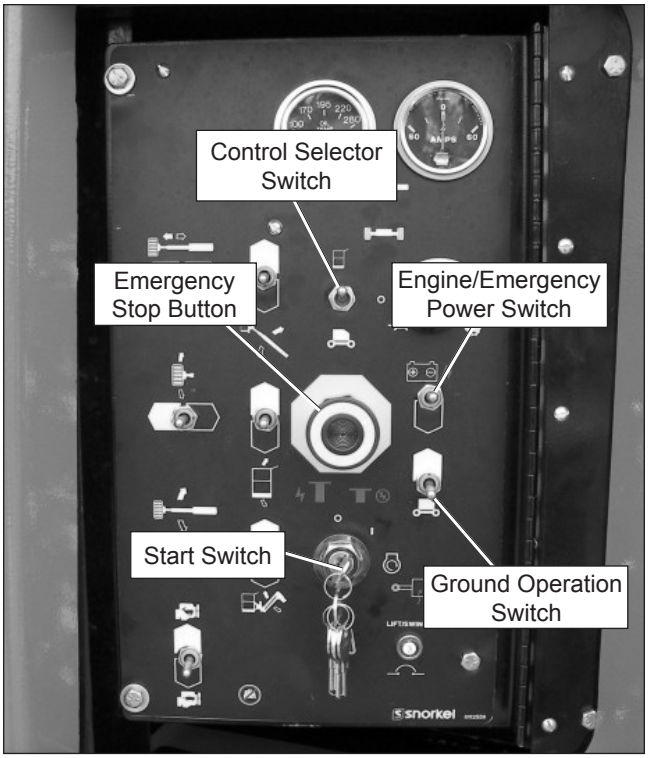

Figure 7.11 – Lower Controls

Operating Controls

Use the following procedure to operate the machine from the lower controls.

1. Turn the battery disconnect switch on.

2. At the lower controls, pull the emergency stop button outward. Place the control selector switch in the lower control position.

3. Insert the key in the start switch and turn until the engine starts, then release it to on.

4. Let the engine warm to operating temperature.

5. Hold the ground operation switch upward.

⚠Danger

Pinch points may exist between moving components. Death or serious injury will result from becoming trapped between components, buildings, structures, or other obstacles. Make sure all personnel stand clear of the aerial platform while preforming prestart inspection.

⚠Warning

The potential for an accident increases when operating an aerial platform that is damaged or malfunctioning. Death or serious injury could result from such accidents. Do not operate the aerial platform if it is damaged or malfunctioning.

6. Test the operation of each function in both directions.

Note
When checking the turntable rotation function in the clockwise direction, the turntable will rotate toward you.

Emergency Stop

To test the emergency stop button from the lower controls:

1. Push the emergency stop button (refer to Figure 7.11) inward to turn off electrical power.

2. Test the lower control functions to make sure they do not operate.

Emergency Power

To test the emergency power system from the lower controls:

1. Place the battery disconnect switch, the emergency stop switch and the start switch in the on position.

2. Hold the engine/emergency power switch (refer to Figure 7.11) downward and the ground operation switch upward to operate the aerial platform from the lower controls using the emergency power system.

Emergency Lowering

The main boom can be lowered in an emergency using the emergency lowering knob. The emergency lowering knob is at the base of the main boom lift cylinder (refer to Figure 7.12).

Use the following procedure to test the emergency lowering system.

1. Use the lower controls to raise the main boom.

2. Turn the engine off.

https://truckmanualshub.com/

⚠Danger

Pinch points may exist between moving components. Death or serious injury will result from becoming trapped between components. Make sure all personnel stand clear while lowering the platform with the emergency lowering knob.

3. Make sure there is nothing in the way to obstruct the platform when it lowers.

4. Slowly turn the emergency lowering knob to open the bleed down valve (refer to Figure 7.12). The boom should slowly lower.

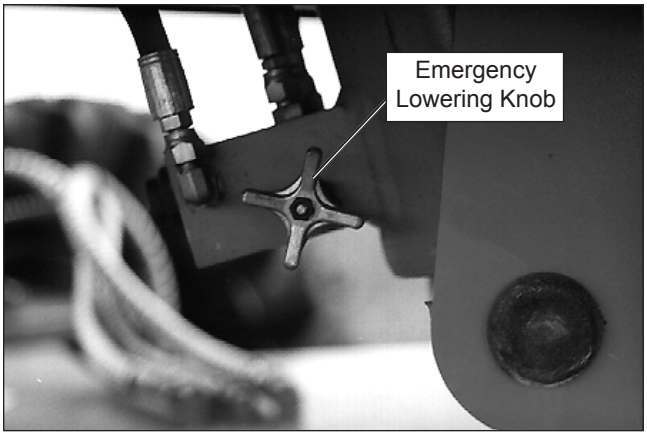

Figure 7.12 – Emergency Lowering Knob

5. Turn the knob to close the cylinder bleed down valve.

⚠Warning

The potential for an accident increases when safety devices do not function properly. Death or serious injury could result from such accidents. Fully close the emergency lowering valve before operating the aerial platform.

6. Make certain the emergency lowering valve is fully closed before operating the aerial platform.

Level Sensor

Use the following procedure to test the level sensor.

1. Position the aerial platform on a smooth, flat, level surface.

2. Remove all persons and materials from the platform.

3. Start the engine and raise the main boom above horizontal, approximately 15 to 20 degrees.

4. Open the rear door on the left side of the machine to access the level sensor (refer to Figure 7.13).

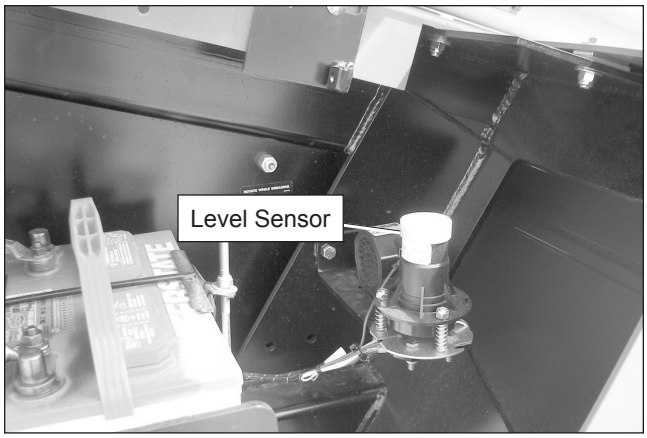

Figure 7.13 – Level Sensor

5. Pull the level sensor to the side as far as possible to activate the tilt alarm.

⚠Warning

The potential for an accident increases when safety devices do not function properly. Death or serious injury can result from such accidents. Do not alter, disable, or override any safety device.

6. If the alarm does not sound, remove the machine from service until the problem is corrected.

7. Lower the main boom.

Flashing Light

The machine may be equipped with an optional flashing light mounted on top of the cowling on each side of the machine (refer to Figure 7.14).

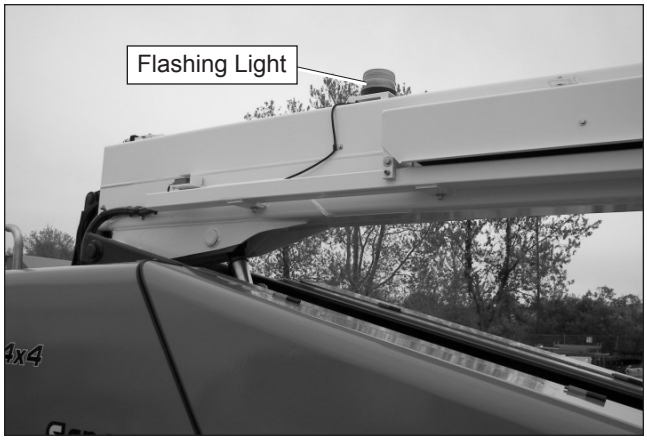

Figure 7.14 – Flashing Light

To inspect the flashing lights:

1. Turn the battery disconnect on, pull the emergency stop button outward at the lower controls, and turn the start switch on.

2. Visually check to see that the light is flashing approximately one flash per second.

https://truckmanualshub.com/

Note
There is not an off switch for the flashing light. The light cannot be turned off.

Sandblast Protection Kit

The optional sandblast protection kit protects the cylinders from abrasion while sandblasting or from paint overspray. Rubber covers (refer to Figure 7.15) protect each cylinder rod as it extends and retracts. The covers prevent sand and paint from damaging the cylinder seals and rod.

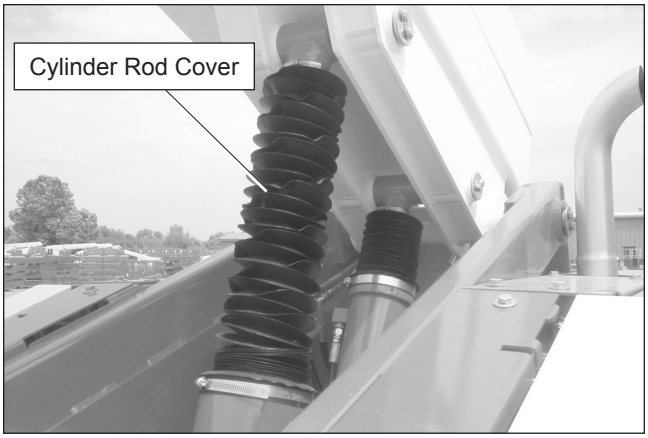

Figure 7.15 – Sandblast Protection Kit

To inspect the sand blast protection kit:

1. Inspect the covers while operating the machine to ensure they are securely fastened and completely cover the cylinder rod.

2. Make sure there are no holes in the covers.

Structures

Visually inspect all weldments and related components. It is important to inspect the fasteners that connect the components.

Weldments

To inspect the weldments:

1. Visually inspect all weldments for abnormal wear, abrasion, or deformation that could cause interference between moving parts.

2. Inspect the welds on the structural components. Pay particular attention to boom welds. The area to be inspected should be clean and free of dirt and grease.

3. Look for visible cracks in the weld and at the weld to parent material joint. A bright light may be used to provide adequate visibility of the inspection area.

Slide Pads

The main boom has slide pads (refer to Figure 7.16) between the boom sections.

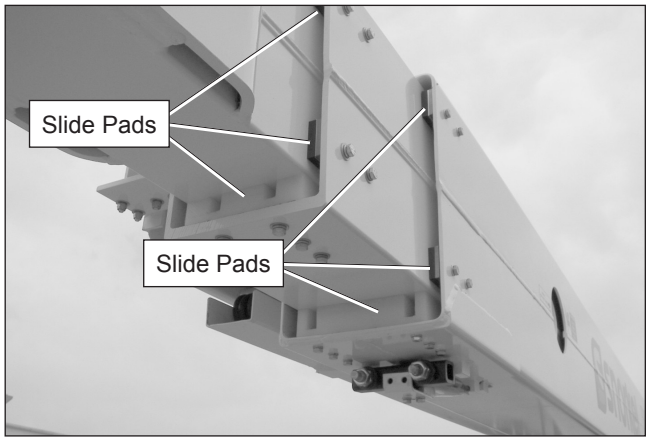

Figure 7.16 – Boom Sections

To inspect the slide pads:

1. Use the lower controls to position the main boom near horizontal. Extend the tip boom about 1′ (30 cm).

2. Visually inspect the slide pads to make sure they are securely fastened to the main boom.

3. Inspect the surface where the pads contact the tip boom. The paint must be in place with no signs of bare metal.

Wire Ropes

Visually inspect the wire ropes where they are connected to the outside of the main boom. There is a wire rope connection on the bottom of the tip end of the main boom (refer to Figure 7.17) and also one on the top of the base end of the boom (refer to Figure 7.18).

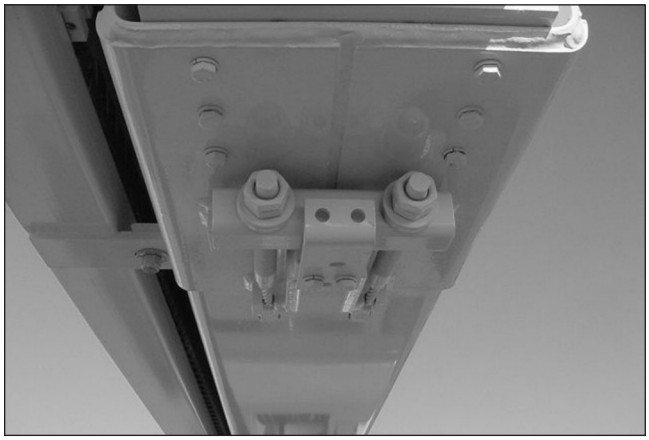

Figure 7.17 – Bottom of Main Boom at Tip End

https://truckmanualshub.com/

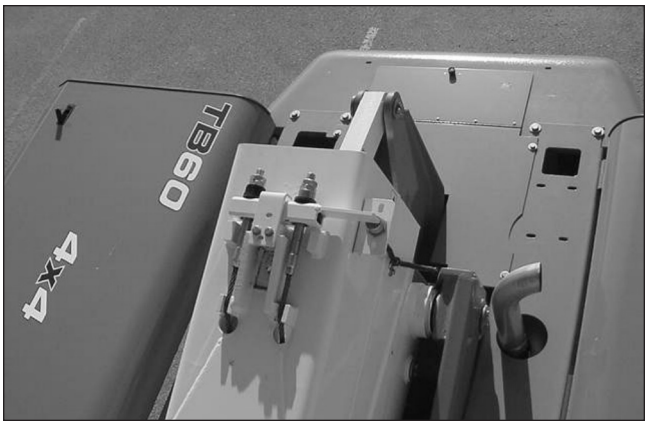

Figure 7.18 – Top of Main Boom at Base End

Also inspect the wire ropes just inside the base end of the main boom (refer to Figure 7.19).

Figure 7.19 – Base End of Main Boom

Fasteners
To inspect the component fasteners:

1. Visually inspect all fasteners to see that none are missing or loose.

2. Inspect all of the bolts, nuts, rollpins, collars, and snap rings that connect the booms and cylinders. They should all be present, tight, and not damaged in any way.

3. Raise the main boom to access the rotation bearing bolts in the turntable (refer to Figure 7.20).

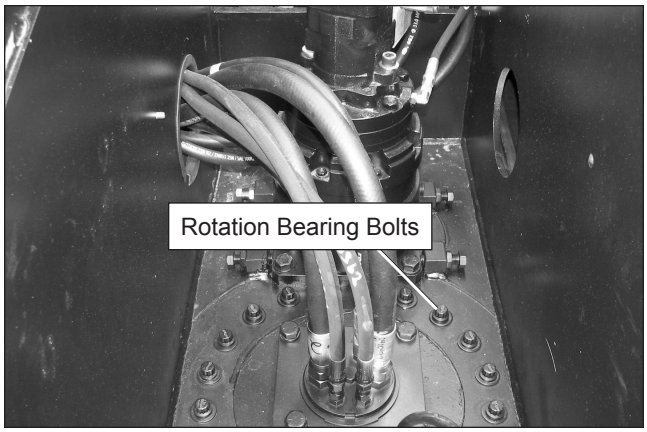

Figure 7.20 – Inside Turntable

4. Inspect the inner and outer race rotation bearing bolts to ensure that none are missing, damaged, or loose.

Upper Control Station

Inspect the platform and upper controls, after verifying all functions operated properly from the lower controls.

Guardrail System
The guardrail system includes (refer to Figure 7.21):

- A top rail
- A mid rail
- A gravity gate or optional swinging gate
- Optional side entry gravity gate
- Toeboards around the sides of the platform.

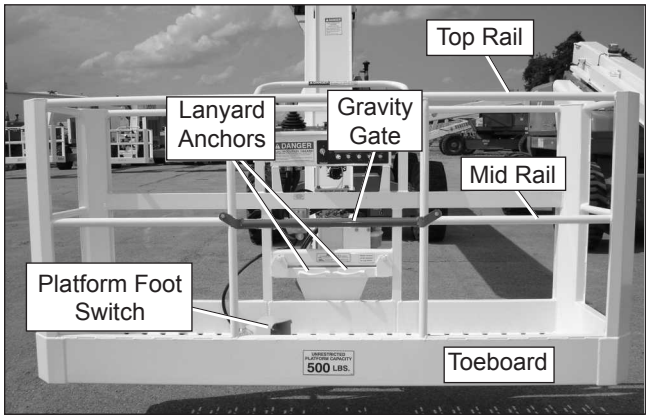

Figure 7.21 – Platform

To inspect the guardrail system:

1. Inspect all components of the guardrail system. Make sure the rails and toeboards are all in place and free of any damage or deformation.

2. Visually inspect the rail and toeboard welds for cracks.

https://truckmanualshub.com/

3. Visually inspect all bolts and nuts fastening the platform in place. They must be present and not show any signs of looseness.

4. Inspect the gate(s) to be sure they are present, are not damaged, and move freely.

Lanyard Anchors
There are two lanyard anchors below the upper control panel (refer to Figure 7.21).

To inspect the lanyard anchors:

1. Visually inspect the lanyard anchors to make sure they are in place and are not deformed.

2. Look for visible cracks in the welds and at the weld to parent material joints. A bright light may be used to provide adequate visibility of the inspection area.

Operating Controls
Use the following procedure to operate and test the machine from the upper controls:

1. Turn the battery disconnect switch on.

2. At the lower controls, place the emergency stop switch and the start switch in the on position. Place the control selector switch in the upper control position.

3. At the upper controls (refer to Figure 7.22), pull the emergency stop button outward.

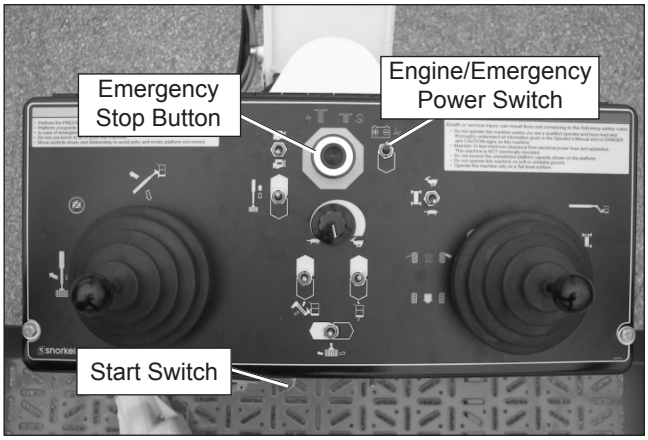

Figure 7.22 – Upper Controls

4. Turn the start switch on the front of the upper control panel to start until the engine starts, then release it.

5. Let the engine warm to operating temperature.

⚠Danger

Pinch points may exist between moving components. Death or serious injury will result from becoming trapped between components, buildings, structures, or other obstacles. Make sure all personnel stand clear of the aerial platform while performing the prestart inspection.

⚠Warning

The potential for an accident increases when operating an aerial platform that is damaged or malfunctioning. Death or serious injury could result from such accidents. Do not operate the aerial platform if it is damaged or malfunctioning.

6. Test the platform foot switch by moving a boom function control without stepping on the foot switch. If movement occurs the interlock is not functioning properly. Do not operate the machine until the problem is corrected.

7. Test the operation of each control in both directions from the upper controls.

8. The drive range switch and maximum travel speeds are interlocked through limit switches on the turntable that senses the position of the main boom.

   - When the main boom is raised approximately 1½″ (3.8 cm) or extended approximately 1″ (2.5 cm), the machine should travel in low speed only.

   - To operate in high speed the booms must be stowed.

Emergency Stop
To test the emergency stop button from the upper controls:

1. At the lower controls, start the engine and place the control selector switch in the upper control position.

2. At the upper controls, push the emergency stop button (refer to Figure 7.22) inward to turn off electrical power.

3. Verify that the engine shuts off and the upper control functions do not operate.

Emergency Power
To test the emergency power system from the upper controls:

1. Turn the battery disconnect switch on.

2. At the lower controls, pull the emergency stop button outward and place the start switch in the on position. Place the control selector switch in the upper control position.

3. At the upper controls (refer to Figure 7.22), pull the emergency stop button outward and place the start switch in the on position.

https://truckmanualshub.com/

4. Hold the engine/emergency power switch in the emergency power position and step on the platform foot switch to verify operation of the aerial platform using the emergency power system.

Horn
The machine may be equipped with an optional horn (refer to Figure 7.23).

- Operate the horn to ensure that it sounds to warn personnel in the area.

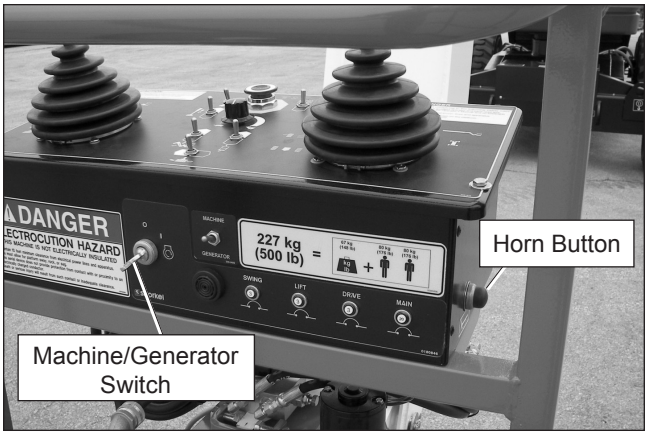

Figure 7.23 – Upper Controls

Electrical Power Outlet
Connect a source of 110 volt AC power to the power-input connector on the left side of the wiring box (refer to Figure 7.24).

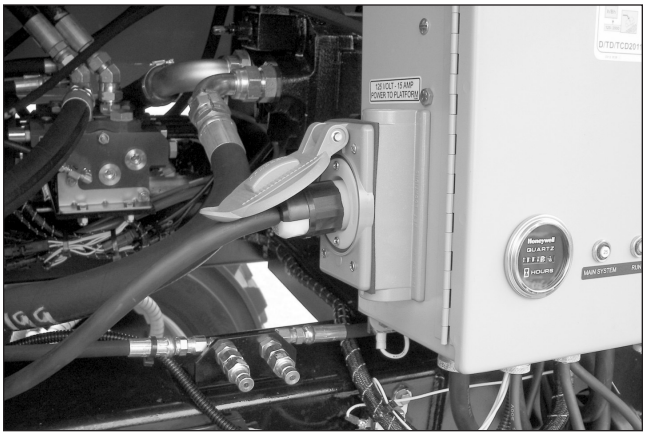

Figure 7.24 – Wiring Box

Some machines may have an electrical cable already plugged into the outlet on the lower control panel. In that case, power is supplied by an optional AC generator. An external power source is not required.

With the engine running, place the optional machine/generator control (refer to Figure 7.23) in the generator position to provide electrical power to the two electrical outlets at the platform.

Plug an electrical tool into the receptacle at the platform and try to operate the tool to verify proper operation of the outlet.

The outlet is equipped with a ground fault circuit interrupter (GFCI). Use the following procedure to test the GFCI.

1. Push the test button (refer to Figure 7.25).

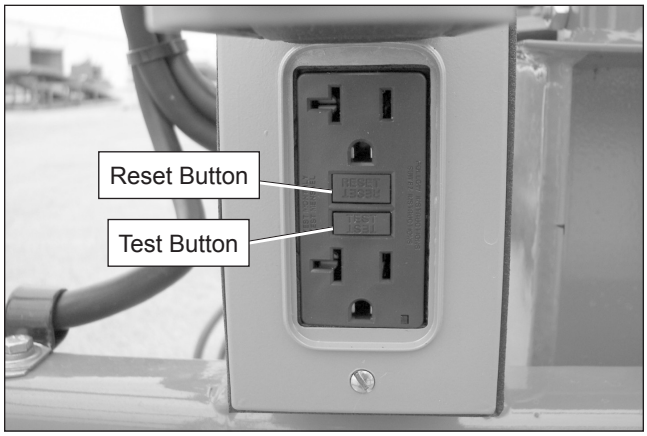

Figure 7.25 – Electrical Outlet

2. Plug an electrical tool into the outlet and verify the power is off.
   - If the power is off, push the reset button to restore power.
   - If the power is on, repair or replace the receptacle.

All Motion Alarm
The machine may be equipped with an all motion alarm.

- Operate machine functions to ensure that the alarm sounds to warn personnel in the area that the aerial platform is in motion.

Air Line to Platform
The machine may be equipped with an optional air line to the platform.

- Inspect the components, including the air line, mounting hardware, and the caps on the input and output connectors, etc. to verify all components are present and are in working condition.

Driving and Platform Work Lights
The machine may be equipped with driving lights and/or platform work lights.

- Turn the engine on and use the switch on the back of each light to momentarily turn it on to see that it works.

https://truckmanualshub.com/

Tow Kit

The machine may be equipped with an optional tow kit.

- Inspect the components, including the tow bar, steer arm, and chains, etc. to verify all components are present and are in working condition.

Platform Glazier Package

To inspect the platform glazier package:

1. Inspect the glazier trays (refer to Figure 7.26) to make sure they are in good condition and are not bent or distorted.

2. Inspect the keeper pins to make sure they are in good condition and are not bent or distorted.

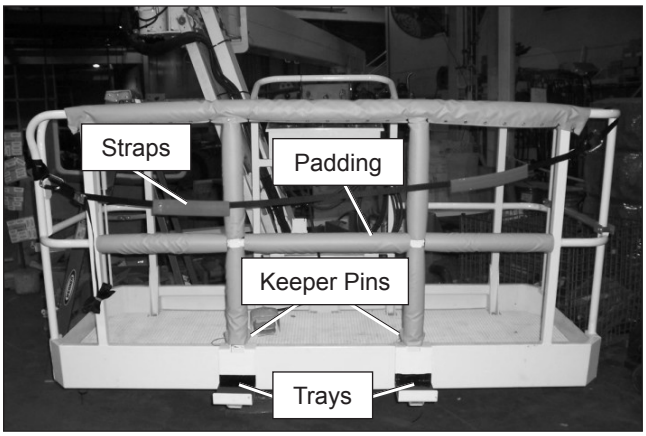

Figure 7.26 – Platform

3. Make sure the straps and padding are in good condition and are not worn, cut or frayed.

Platform Control Cover

The machine may be equipped with an optional platform control cover.

- Inspect the cover to ensure it fits properly over the control panel.

Placards and Decals

To inspect the placards and decals:

1. Inspect all safety and operational placards and decals. Make certain they are in place, in good condition, and are legible.

2. Clean the placards and decals with soap and water, and a soft cloth if the words or pictures cannot be seen.

⚠Caution

Solvents may contain hazardous ingredients. Follow the manufacturer's label for proper use and disposal. Wear protective gloves and splash-proof safety glasses when using solvents.

3. Remove wet paint overspray with a natural biodegradable solvent and a soft cloth.

4. Replace any missing, damaged, or illegible placards or decals before operating the aerial platform.

Placard and decal kits are available from Snorkel.

The safety related placards and decals are illustrated on the following pages.

https://truckmanualshub.com/

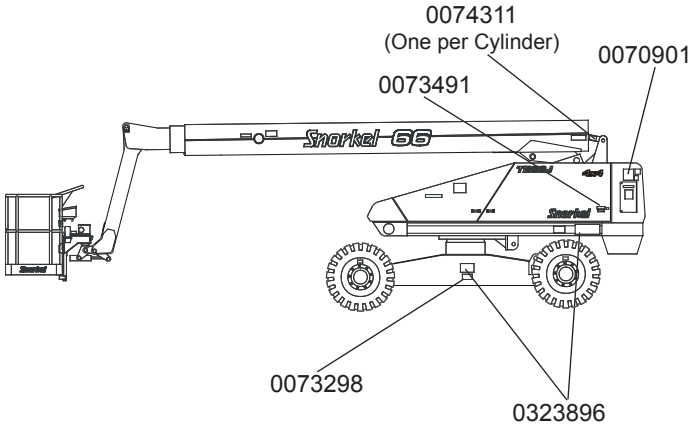

Right Side

0074311

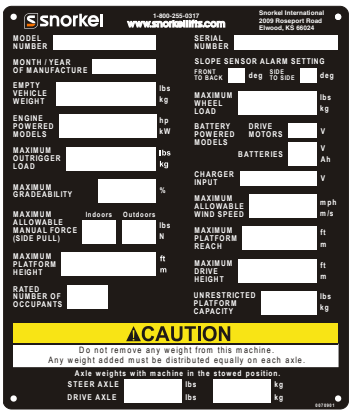

0070901

0323896

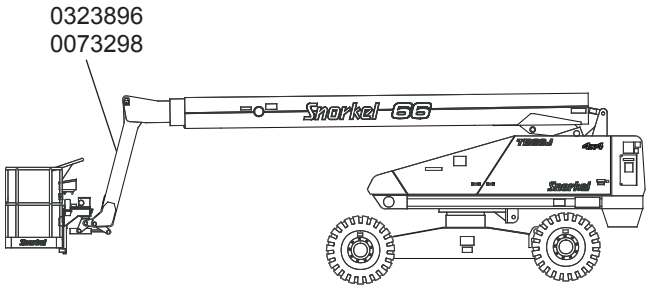

Right Side

0073298

0073491

https://truckmanualshub.com/

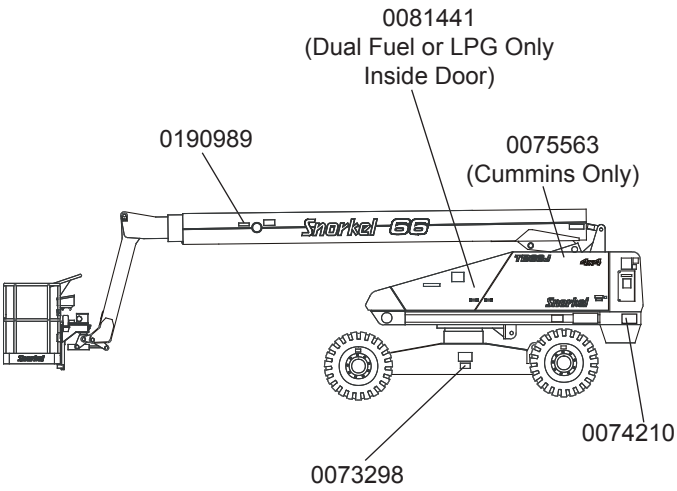

Right Side

DANGER

FAILURE TO COMPLY TO THE FOLLOWING RULES CAN RESULT IN DEATH OR SERIOUS INJURY.

ELECTROCUTION HAZARD

- Do not operate this machine unless you are a qualified operator and have read and thoroughly understand all information given in the Operator's Manual and on danger and caution signs on this machine.
- This machine is not electrically insulated. Maintain 10 feet minimum clearance from electrical power lines and apparatus.

TIPPING & FALLING HAZARD

- Do not exceed the unrestricted platform capacity shown on the platform.
- Do not operate this machine on soft or unstable ground.
- Only operate this machine on flat level ground.
- Do not use machine as a crane, hoist, or jack, and do not position machine against another object to steady the platform.
- Do not use machine if not functioning properly or damaged in any way.
- Do not modify or alter this machine.
- See the Operator's manual for other hazard information.

0074210

DANGER

MACHINE TIPOVER HAZARD

DEATH or serious injury can result if machine tips over.

This machine is equipped with foam filled or solid tires, wheel weight is critical for stability.

To prevent machine tip over, replace tires with factory approved foam filled or solid tires ONLY.

DO NOT attempt to inflate foam filled or solid tires.

0073298

DANGER

DO NOT REACH THROUGH HOLES.

0190989

CAUTION

THIS MACHINE IS EQUIPPED WITH

LIQUID WITHDRAWAL

L.P. GAS SYSTEM

- LIQUID OR VAPOR WITHDRAWAL L.P.-GAS CYLINDER MAY BE USED.
- ALWAYS KEEP L.P.-GAS CYLINDER SHUT-OFF VALVE CLOSED WHEN NOT USING L.P.-GAS SYSTEM.

0081441

WARNING

EXPLOSION HAZARD
DO NOT USE ETHER

Engine is equipped with electrical heater starting aid. Use of ether could result in explosion or serious injury.

0075563

0075563

https://truckmanualshub.com/

0323897

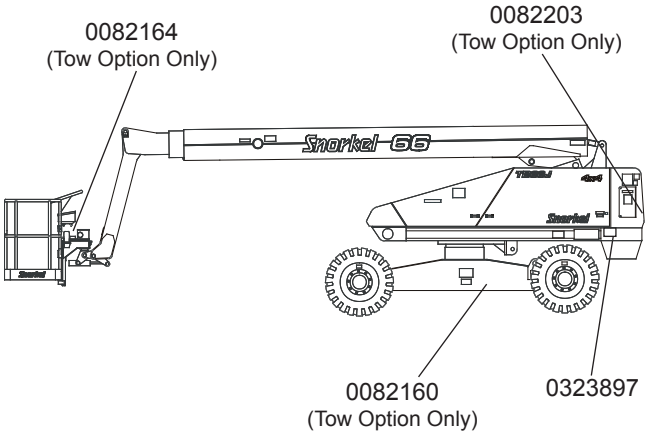

Right Side

0082164

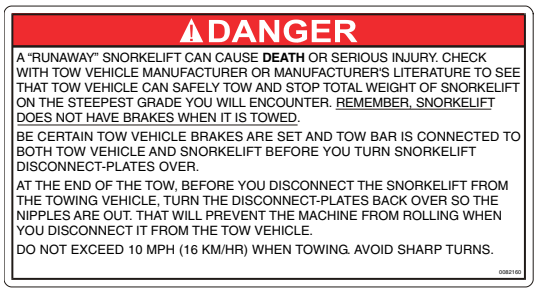

0082160

0082203

https://truckmanualshub.com/

0323896

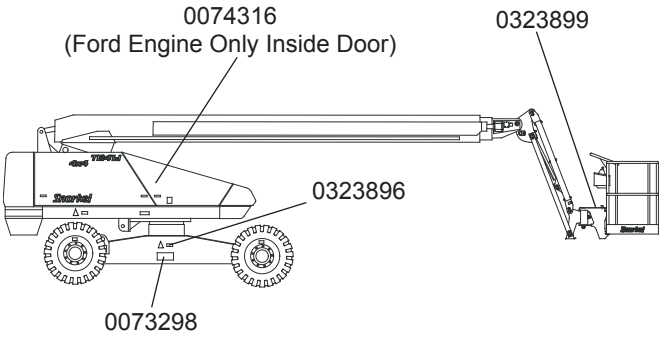

Left Side

0073298

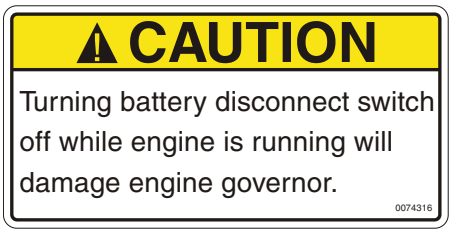

0074316

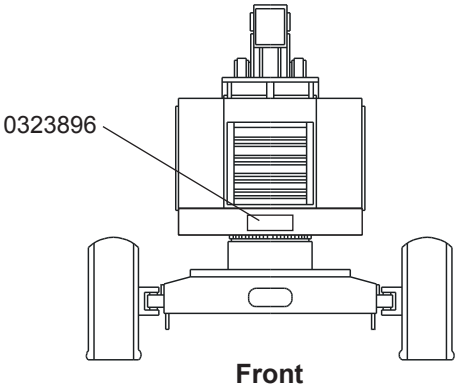

Front

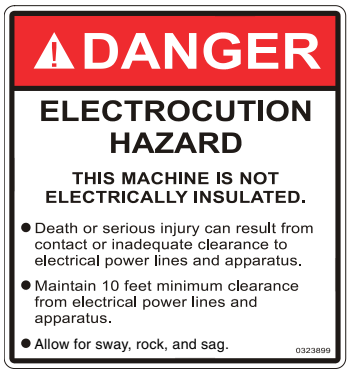

0323899

https://truckmanualshub.com/

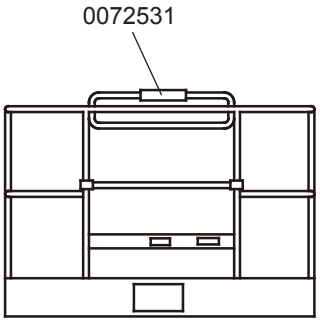

Platform

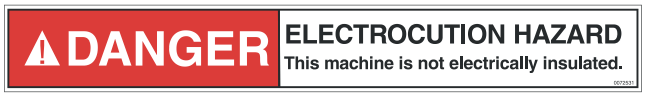

0072531

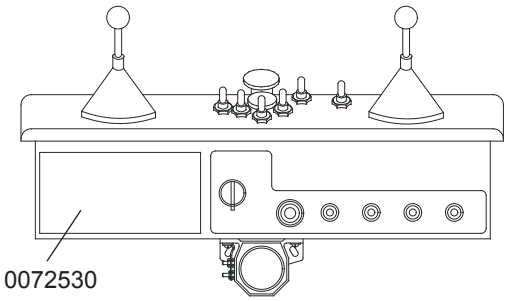

Upper Control Panel Front

0072530

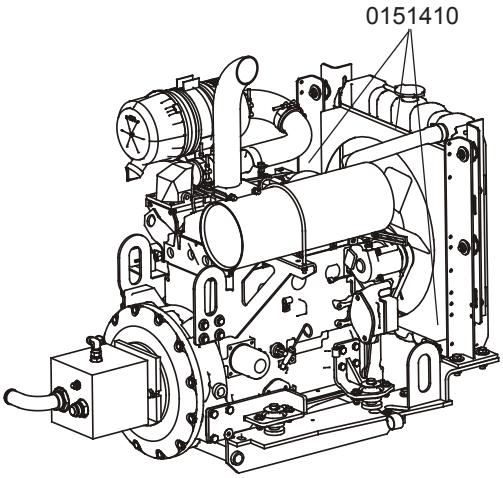

Radiator

0151410

0421078

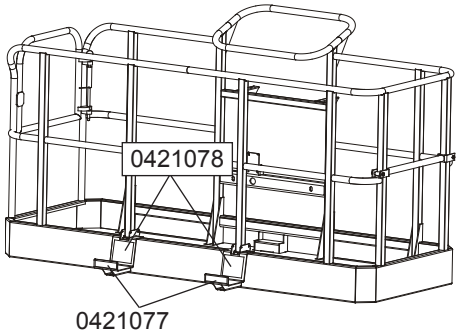

Platform Glazier Package

0421077

https://truckmanualshub.com/

https://truckmanualshub.com/

Prestart Inspection Checklist

Item	Inspect For	OK
Operator's Manual	In place, all pages readable and intact	
Engine		
Oil Level	Between full and add marks	
Coolant	Liquid cooled engines – proper fluid level	
	Air cooled engines – air intake and fan free of obstructions, belt in good condition	
Radiator	Cap tight, good condition and clean	
Fuel tank and line	Tank full, cap in place and tight/no leaks	
Air filter	Clear indicator	
Charging system	Proper operation	
Cold weather start kit	No damage or deformation	
Electrical System		
Battery	Condition and charged for proper operation	
Battery fluid level and terminals	Proper level/clean, connectors tight	
Cables and wiring harness	No wear or physical damage	
Hydraulic System		
Fluid level	Between add and full marks, cap in place and tight	
Fluid filter	Verify operation in the green zone	
Hoses, tubes and fittings	No leaks	
Cold weather warm-up kit	Proper operation	
Tires and wheels	Good condition	
Lower Control Station		
Operating controls	Proper operation	
Emergency stop and emergency power	Shuts off lower controls/proper operation	
Emergency Lowering	Proper operation	
Level Sensor	Sounds tilt alarm	
Flashing Lights	Proper operation	
Structures		
Weldments – Chassis, turntable, booms, platform, etc.	Welds intact, no damage or deformation	
Slide pads	In place, no damage or deformation	
Fasteners	In place, tight, and no damage	
Wire ropes	No deformation or broken strands	
Upper Control Station		
Guardrail system and lanyard anchors	Welds intact, no damage or deformation	
Operating controls – Boom functions, drive, brakes, etc.	Proper operation	
Emergency stop and emergency power	Shuts off upper controls/proper operation	
Horn	Sounds when activated	
Electrical power outlet – GFCI	Proper operation	
Driving and work lights	Proper operation	
Platform control cover	In place and proper operation	
All Motion Alarm	Sounds when machine is operated and/or driven	
Sandblast Protection Kit	In place and proper operation	
Air Line to Platform	No damage or deformation, caps in place	
Driving and Platform Work Lights	No damage or deformation, proper operation	
Tow Kit	In place, no damage or deformation	
Platform Glazier Package	Good condition	
Bump Guard System	Good condition, proper operation	
Placards and Decals	In place and readable	

https://truckmanualshub.com/

https://truckmanualshub.com/

The aerial platform may be operated from either the lower or upper controls.

⚠Danger

The aerial platform is not electrically insulated. Death or serious injury will result from contact with, or inadequate clearance from, an energized conductor. Do not go closer than the minimum safe approach distance as defined by ANSI.

Pinch points may exist between moving components. Death or serious injury will result from becoming trapped between components, buildings, structures, or other obstacles. Make sure there is sufficient clearance around the machine before moving the chassis, booms, or platform. Allow sufficient room and time to stop movement to avoid contact with structures or other hazards.

The aerial platform can tip over if it becomes unstable. Death or serious injury will result from a tip-over accident. Operate the aerial platform on a firm, flat, level surface. Avoid travel speeds and/or rough terrain that could cause sudden changes in platform position. Do not drive or position the aerial platform for elevated use near any drop-off, hole, slope, soft or uneven ground, or other tip-over hazard.

The platform rated work load is the total weight of the personnel and equipment that may be lifted in the platform.

The work loads are stated on the platform rating placard at the:

- rear of the platform
- lower controls
- upper controls

⚠Danger

The aerial platform can tip over if it becomes unstable. Death or serious injury will result from a tip-over accident. Do not exceed the capacity values indicated on the platform rating placard.

Capacity values indicate the rated lifting capacity and do not indicate aerial platform stability.

The operator bears ultimate responsibility for ensuring that the aerial platform is properly set up for the particular conditions encountered.

Cold Weather Start Up

If the ambient temperature is 32°F (0°C) or below, the engine and hydraulic system oil may need to be warmed up before operation. Do not operate the engine at more than a fast idle until the engine and hydraulic oil has had a chance to warm. The engine may be equipped with an optional cold weather start kit.

Cold, thick hydraulic oil does not flow well and may cause delay in response to control movement and improper voltage output of the optional AC generator. Cold hydraulic oil may also cause cavitation and pump damage. The hydraulic system may be equipped with an optional cold weather warm-up kit.

Engine Cold Weather Start Kit

The optional engine cold weather start kit may be an engine block heater or a radiator hose in-line heater. The type of starting assist system depends on the engine manufacturer.

The last two letters of the model number stamped on the serial number placard indicates the engine manufacturer (refer to Figure 8.1).

Last Two Letters of Model Number	Engine Manufacturer	Cold Weather Start System
CU	Cummins	Engine block heater or ether injection
DZ	Deutz	Manifold air preheater
KU	Kubota	Engine block heater
FO	Ford	Engine block heater
GM	GM	Radiator Hose In-Line

Figure 8.1 – Engine Manufacturer/Start System

Refer to the engine manufacturer below for specific cold weather start-up information for that particular engine type and cold weather start system.

Cummins, Kubota and Ford – Block Heater

Plug the heater cord into a 125 Volt AC, 600 watt source eight hours before starting the engine. The heater will warm the engine block to make cold weather starting easier.

Unplug the power cord before starting the engine.

Cummins – Ether Injection

Some Cummins engines may have an ether injection system instead of a block heater. Ether injection should only be used to start a cold engine when the ambient temperature is below 32°F (0°C).

Make sure there is a can of ether installed in the holder, in the engine compartment on the right side of the machine. Use the following procedure to install a can of ether as necessary.

1. Place the battery disconnect switch in the off position.
2. Unscrew the holding cup.
3. Place a new can of ether in the cup.
4. Screw the holding cup firmly into position.

https://truckmanualshub.com/

5. Place the battery disconnect switch in the on position.

Activate the toggle switch while the start switch is in the start position to inject a measured amount of ether into the intake manifold.

Note
Do not crank the engine longer than 20 seconds. If the engine does not start wait for two minutes before trying to start the engine again.

Deutz – Manifold Preheater
At the lower controls, hold the manifold heater switch on for about a minute before turning the master switch to start the engine. A glow plug in the manifold preheats the air to help start the engine. Continue to hold the switch while starting the engine. Do not release the switch until the engine starts.

If the engine does not start within 20 seconds, continue to hold the manifold heater switch and turn the master switch off. Wait for one minute before trying to start the engine again.

GM – Radiator Hose In-Line
Plug the heater cord into a 125 Volt AC, 600 watt source either hours before starting the engine. The heater will warm the water in the lower radiator hose to make cold weather starting easier.

Unplug the power cord before starting the engine.

Hydraulic System Cold Weather Warm-Up

Some machines may have a hydraulic fluid warm-up system that will automatically warm the fluid upon activating the warm-up switch. The hydraulic fluid may also be warmed manually if the machine is not equipped with the optional warm-up system.

⚠Caution

Not all hydraulic fluid is suitable to use in the hydraulic system. Some have poor lubricating characteristics and can increase component wear. Only use hydraulic fluid as recommended.

Use cold weather hydraulic oil as recommended in the machine General Specifications in temperatures of 10°F (-12°C) or below.

Hydraulic System Warm-up Switch
This system may be used to warm the hydraulic fluid when the ambient temperature is below 32°F (0°C) and boom movement is sluggish because of cold fluid.

There may be a toggle switch for the warm-up system on the lower control panel and/or one on the upper control panel.

The engine must be running and the switch used to turn the system on must be at the same location that the engine was started. For example, if the engine was started from the lower controls, the warm-up switch at the lower controls must be used for the system to operate.

To operate the warm-up system:

1. Start the engine and place the engine throttle in the low position.

2. From the same control station that the engine was started, place the warm-up switch in the on position.

3. After the hydraulic fluid reaches 50°F (10°C) as indicated on the thermometer, place the warm-up switch in the off position.

Manually Warming The Hydraulic System
The hydraulic oil may be warmed by bottoming out the boom extension cylinder. Raise the main boom so it is horizontal and operate the boom retract function while the machine is stowed. With the cylinder bottomed out the oil flow will produce heat to warm the hydraulic oil.

⚠Caution

Not all hydraulic fluid is suitable to use in the hydraulic system. Some have poor lubricating characteristics and can increase component wear. Only use hydraulic fluid as recommended.

Use cold weather hydraulic oil as recommended in the machine General Specifications in temperatures of 10°F (-12°C) or below.

Preparing for Operation

Use the following procedure to prepare the aerial platform for operation:

1. Perform a prestart inspection as described in Chapter 7.

2. Place the battery disconnect switch in the on position.

3. Close and latch the cowling doors.

4. Before painting or sandblasting make sure the sandblast protection kit and the platform control cover are properly installed. These options, when used properly will protect the control placards and cylinder rods from paint overspray and abrasion while sandblasting.

Lower Controls

The lower controls override the upper controls. This means that the lower controls can always be used to operate the platform regardless of the position of the upper control emergency stop button.

Boom, turntable, and platform functions may be operated from the lower controls. The lower controls may be used for initial set up of the aerial platform, and for testing and inspection.

https://truckmanualshub.com/

Use the following procedure to operate boom, turntable, or platform functions using the lower controls. Refer to Figure 8.2.

1. On dual fuel machines, set the fuel switch to either LPG or gasoline.

2. Open the shut-off valve on the tank if using LPG.

3. Pull the emergency stop button (refer to Figure 8.2) outward and place the control selector switch in the lower control position.

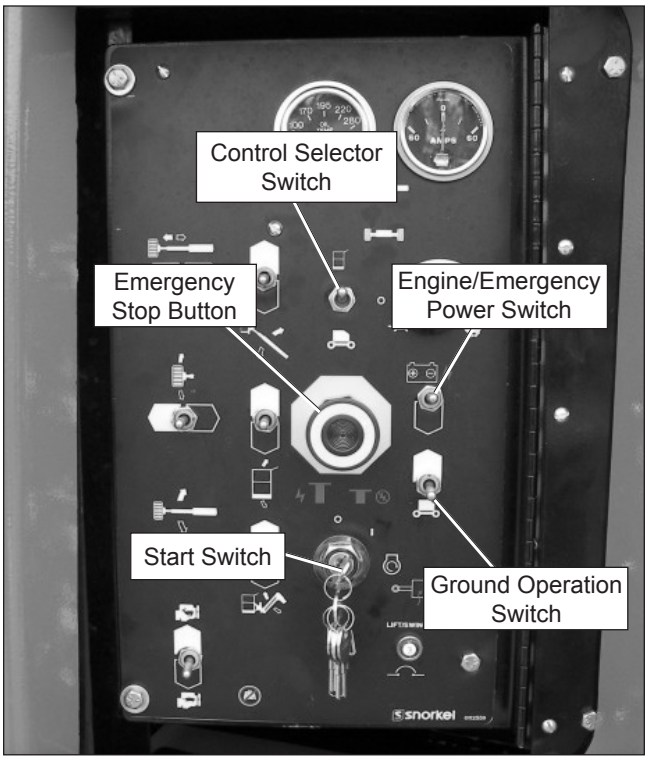

Figure 8.2 – Lower Controls

4. Turn the start switch to on and pause a few seconds while the alarm sounds to alert others that the machine is about to start. Turn the switch to start, then release it to on. The engine will not start if the switch is left in the on position for 30 seconds or longer before turning it to start. The switch must be turned back to off before the engine will start.

Note
If the machine has a GM engine, there will be a 7 to 10 second delay after starting the engine, before the throttle will go to mid or high. Start the engine and wait 10 seconds before proceeding with machine operation.

5. Let the engine warm to operating temperature.

6. Hold the ground operation switch upward to the on position while operating the boom and turntable control toggle switches.

7. Hold the appropriate toggle switch in the desired direction.

8. Gradually turn the boom speed knob to control the main boom raise/lower, extend/retract, jib rotate, and turntable rotation speed.

9. Release the function toggle switch to stop movement.

10. Release the ground operation switch to the off position when no functions are being operated.

Upper Controls

The upper controls may be used for driving the aerial platform and positioning the booms and platform while on the job.

Use the following procedure to operate machine functions using the upper controls.

1. At the lower controls, pull the emergency stop button outward to the on position and turn the start switch on. Place the control selector switch in the upper controls position.

2. On dual fuel machines, set the fuel switch to either LPG or gasoline.

3. Open the shut-off valve on the tank if using LPG.

4. Enter the platform and securely close the gate.

5. Attach the fall restraint lanyard to one of the anchor points (refer to Figure 8.3).

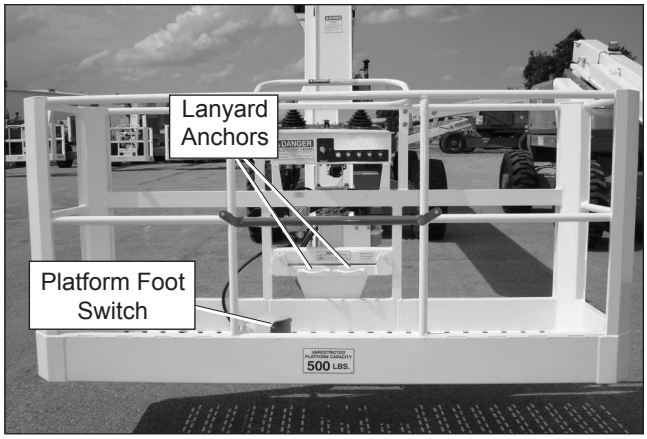

Figure 8.3 – Platform

6. Pull the emergency stop outward (refer to Figure 8.4).

https://truckmanualshub.com/

Top Front

Figure 8.4 – Upper Controls

7. Turn the start switch to on and pause a few seconds while the alarm sounds to alert others that the machine is about to start. Turn the switch to start, then release it to on. The engine will not start if the switch is left in the on position for 30 seconds or longer before turning it to start. The switch must be turned back to off before the engine will start.

Note
If the machine has a GM engine, there will be a 7 to 10 second delay after starting the engine, before the throttle will go to mid or high. Start the engine and wait 10 seconds before proceeding with machine operation.

8. Let the engine warm to operating temperature.

Boom Operation
Use the following procedure to operate the turntable, boom, or platform functions.

1. Turn the boom speed knob to slow.

2. Step down on the platform foot switch. This switch must be held down to operate the upper controls.

3. Hold the appropriate control in the desired direction. Always look in the direction of movement.

4. Gradually turn the boom speed knob to control the boom extend, jib and platform level function speed.

5. To stop movement release the control to its neutral position or release the foot switch.

Driving and Steering

⚠Danger

The aerial platform can tip over if it becomes unstable. Death or serious injury will result from a tip-over accident. Do not drive an elevated aerial platform on soft, uneven, or sloping surfaces. Do not drive the machine on grades that exceed the grade capability of the machine.

For operation of two wheel drive machines on grades up to 25 percent, or four wheel drive machines on grades up to 30 percent, it is recommended that the main boom be near horizontal and the jib elevated just enough to provide adequate ground clearance.

A 25 percent grade is a 30″ (0.76 m) vertical rise in 10′ (3.05 m) horizontal length.

A 30 percent grade is a 36″ (0.91 m) vertical rise in 10″ (3.05 m) horizontal length.

Avoid driving with the platform over the front (steer) end of the chassis. In this position the machine is difficult to control because:

- drive and steer control movements and their resulting machine movements are reversed.
- when driving fast, sudden turns or stops produce more severe reactions to platform occupants.
- more turning space is required to prevent the platform from colliding with obstacles several feet beyond the path of the tires.

⚠Warning

Death or serious injury can result from improperly driving or steering the aerial platform. Read and understand the information in this manual and on the placards and decals on the machine before operating the aerial platform on the job.

https://truckmanualshub.com/

The blue and yellow arrows on the chassis indicate the direction the chassis will move when the drive or steer control is moved toward the corresponding color.

When the machine is in the stowed position, with the booms centered between the rear wheels, the direction of drive and steer control movement corresponds with the direction of chassis movement.

When the turntable is rotated from the stowed position, with the booms to either side of or in front of the chassis, the direction of control movement does not correspond with the direction of chassis movement.

- To avoid confusion, always drive to the work area or move between work areas with the turntable and booms in the stowed position.
- After arriving at the work area, the booms may be positioned to the side or the front of the chassis for final positioning.
- Always look in the direction of movement as indicated by the directional arrows on the chassis.

Use the following procedure to operate the drive and steer functions.

1. Determine the desired drive range for the specific driving conditions. Place the switch in the appropriate position to achieve the desired drive wheel operation.
   - Use high range when traveling across firm, flat, level surfaces. High range can only be activated when the booms are stowed. High range is for high speed, low torque operation.
   - Use low range for driving on loading ramps or other steep grades and when safety considerations demand slow deliberate machine movement. Low range is for low speed, high torque operation.
2. Step down on the platform foot switch.
3. The drive speed is proportional to the joystick position.
   - Push the drive joystick forward to move the chassis forward, the direction of the blue arrow.
   - Pull the joystick backward to move the chassis backward, the direction of the yellow arrow.
4. To stop drive motion, return the joystick to neutral.
5. The drive joystick controls the two front wheels to steer the aerial platform.
   - Push the drive joystick to the right to steer to the right, the direction of the yellow arrow.
   - Push the drive joystick to the left to steer to the left, the direction of the blue arrow.

Note
The steering wheels are not self-centering. Set the steering wheels straight ahead after completing a turn.

6. After driving to the desired location, release the foot switch, or push the emergency stop button to apply the parking brakes.

Drive Speeds
Drive speed ranges are interlocked through a limit switch that senses the main boom position.

- When the boom is elevated, only the slowest drive speed will work regardless of the drive range switch position.
- To avoid a sudden speed change from high to low elevated boom speed, always bring the machine to a stop before raising the booms from the stowed position.

⚠Warning
The potential for an accident increases when safety devices do not function properly. Death or serious injury could result from such accidents. Do not alter, disable, or override any safety device.

Do not use the aerial platform if it drives faster than 1 mph (1.6 km/h), or 44 feet (8 m) in 30 seconds, when the booms are elevated from the stowed position.

Motion Warning Alarm
The optional motion warning alarm sounds loud intermittent beeps when the drive joystick is in the forward or reverse position.

Four Wheel Drive
The machine may be equipped with a four wheel drive system. This system operates full time and requires no action by the operator.

Four wheel drive machines have a “4x4” decal on each side of the chassis and all four of the wheel hubs are drive hubs and look the same.

Gradeability
Machine gradeability refers to the maximum slope that the aerial platform is capable of travel under practical conditions. It is based on mathematical calculation, but it also takes into account the practical application.

At any given moment when driving the machine on a slope, at least one, if not all, of the factors contributing to achieving theoretical gradeabilty will not be at optimal performance. For example, tire contact may not be the same at each drive wheel or the slope conditions may not be optimal, which would then allow for loss of traction.

https://truckmanualshub.com/

Percent vs. Degree of Slope
Gradeability is most often referenced as a percentage. That value is based on a slope angle of 45° representing 100% grade.

Angle indicators, or inclinometers, often measure the angle of the slope in degrees not the percent slope. Because of that, it may be useful to understand the relationship between percent slope and the degree of the slope angle as shown in Figure 8.5.

Driving on a Slope
The machine should only be driven on a slope or loading ramp in the stowed position with the platform on the downhill side.

⚠Danger

The aerial platform can tip over if it becomes unstable. Death or serious injury will result from a tip-over accident. Do not drive on slopes that exceed the grade capability of the machine, or where conditions of the slope could cause driving to be hazardous.

Place the drive speed in the low position before attempting to drive the machine on a slope.

Drive the aerial platform only on slopes, or loading ramps that are within the 20 percent grade capability of the aerial platform.

Calculate the percent grade:

- before attempting to climb an unknown grade
- if it is believed that there is a malfunction to determine if the slope is within the actual grade capability of the aerial platform.

Calculating Percent Grade
The percent grade equals the height (rise) of the slope divided by the length (run) times 100. Refer to Figure 8.6.

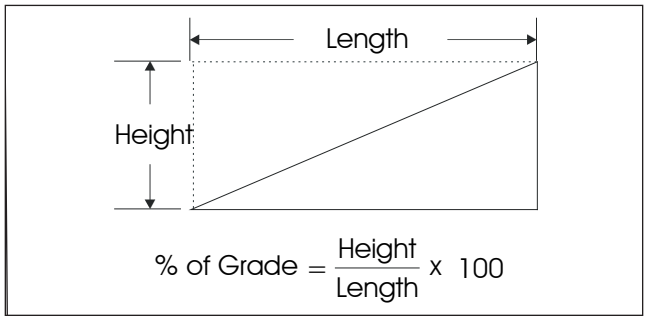

Figure 8.6 – Percent Grade Formula

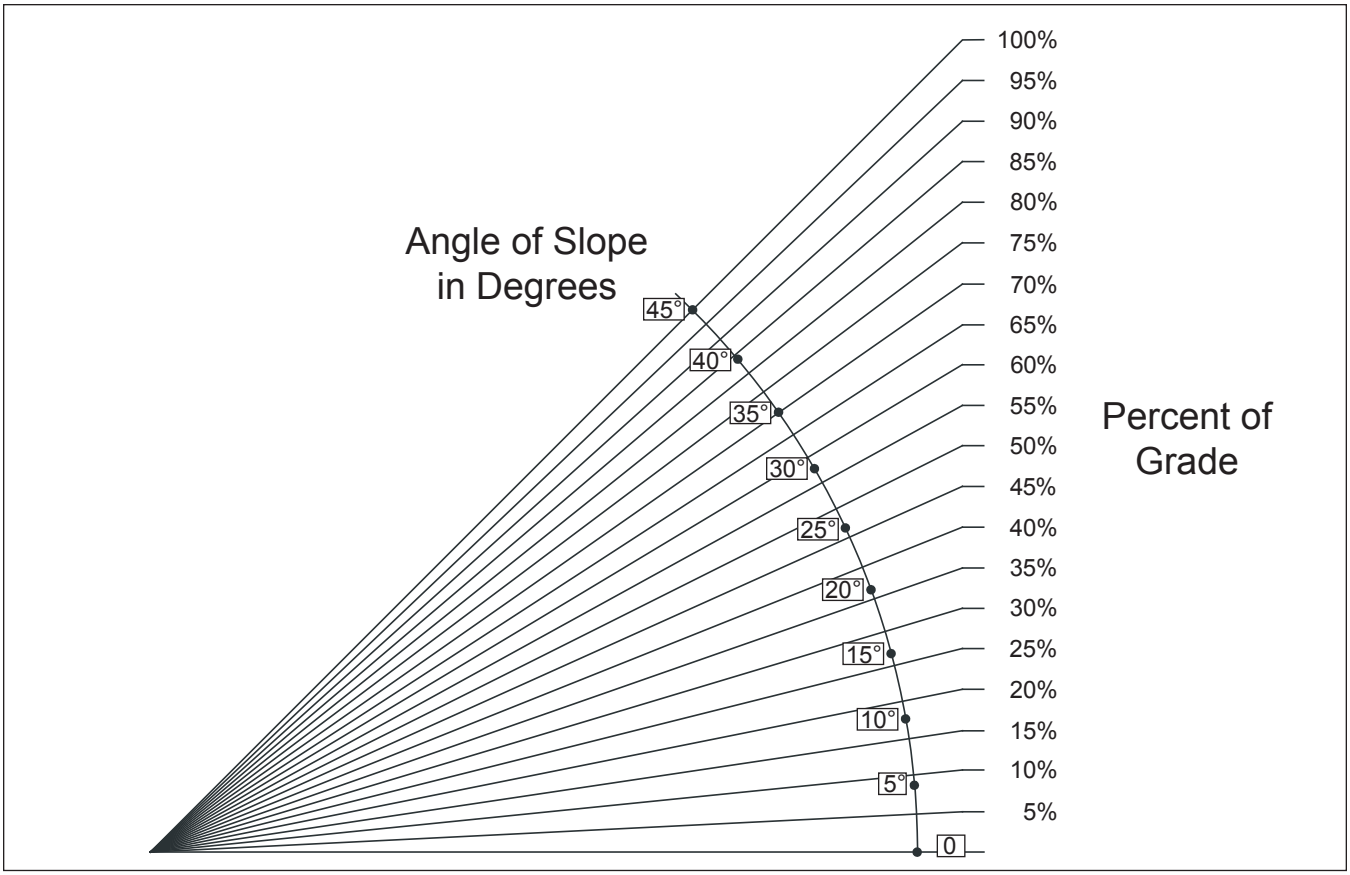

Figure 8.5 – Slope Percent/Degree Conversion

https://truckmanualshub.com/

The grade can be measured with an inclinometer or by using a tape measure, a level, and a straight 2 x 4. If using an inclinometer, refer to the conversion diagram if necessary.

To measure the grade without an inclinometer, use the following procedure.

1. With the 2 x 4 laying parallel with the slope, lay the level lengthwise on the 2 x 4.

2. Holding the downhill end, raise the 2 x 4 until the level indicates that the board is level (refer to Figure 8.7).

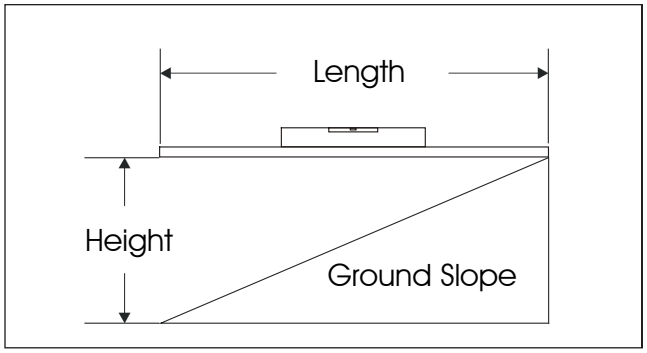

Figure 8.7 – Percent Grade Calculation

3. Use the tape measure to measure the distance (height) from the end of the 2 x 4 to the ground. Record the height distance.

4. Measure the length of the 2 x 4 and record this measurement.

5. Use the formula in Figure 8.6 to calculate the percent of the grade.

Machine Gradeability

The gradeability specification for four-wheel drive TB66J aerial platforms is 30%. An actual gradeability of 30%, indicates that in most normal working conditions the machine can be driven on a slope with an angle of 16.5 degrees.

The gradeability specification for two-wheel drive TB66J aerial platforms is 25%. An actual gradeability of 25%, indicates that in most normal working conditions the machine can be driven on a slope with an angle of 14 degrees.

All Motion Alarm

The optional all motion alarm sounds loud intermittent beeps anytime the machine functions are being operated.

Four Wheel Drive

The machine may be equipped with a four wheel drive system. This system operates full time and requires no action by the operator.

Four wheel drive machines have a “4x4” decal on each side of the chassis and all four of the wheel hubs are drive hubs and look the same.

Electrical Power Outlet

The electrical outlet at the platform has 2, 3-prong, 110 volt AC electrical connectors. Their combined output is limited by a 15 amp circuit breaker.

Power may be supplied to the outlet using an external power source or by operating the optional AC generator.

To use the outlet, plug a source of power into the power-input connector located on the left side of the wiring box (refer to Figure 8.8). Unplug the source of power before moving the aerial platform.

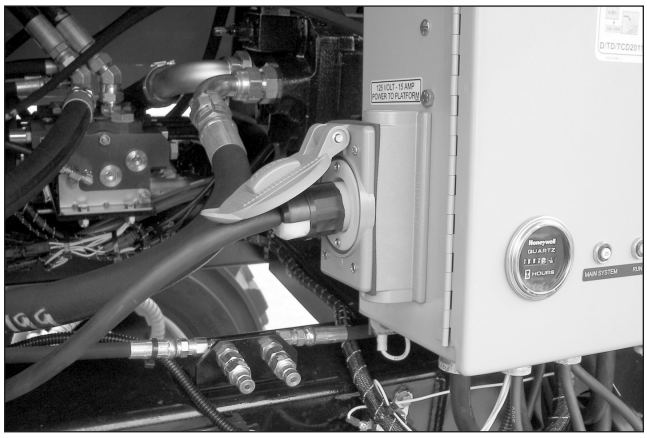

Figure 8.8 – Wiring Box

AC Generator

The optional generator supplies power to the electrical outlet only when the engine is running and the machine is stationary. The machine functions will not operate when the machine/generator selector switch is in the generator position.

⚠Caution

Cold hydraulic oil does not flow well and may produce improper generator output voltage. Improper outlet voltage can damage some electrical power tools and equipment. Warm the hydraulic oil before operating the generator.

Do not operate the generator unless the hydraulic oil temperature is at least 100°F (38°C). Refer to Cold Weather Start-Up for a hydraulic oil warm-up procedure.

To supply power to the electrical power outlet, start the engine and place the machine/generator selector switch (refer to Figure 8.9) in the generator position.

https://truckmanualshub.com/

Figure 8.9 – Upper Control Panel Front

The engine will run at high idle while the generator is operating. The generator will continue to operate as long as the engine is running and the switch is in the generator position.

Dual Fuel

The dual fuel switch is located on the front of the lower control panel.

Before starting the engine, place the fuel switch in the gasoline or the LPG position. Open the shut-off valve on the LPG gas tank if using LPG. Always keep the LPG tank shut-off valve closed when not using LPG.

To switch from gasoline to LPG with the engine running:

1. Open the shut-off valve on the LPG tank.
2. Place the fuel switch in the LPG position.

To switch from LPG to gasoline with the engine running:

1. Place the fuel switch in the gasoline position.
2. Close the shut-off valve on the LPG tank.

Air Line

The optional air line may be used to conduct air for tool operation at the platform.

- The input connector is at the rear of the turntable and the output connector is at the platform on the rotator guard.
- The maximum working pressure of the line is 250 psi (1,723 kPa).

The air line may be used to conduct fluids such as water or antifreeze. Contact Snorkel for compatibility information before using the air line to conduct other fluids.

⚠Caution

Fluid in the air line may damage some air tools or freeze and damage the line. Drain and blow out the air line after using it to conduct fluids.

Use the following procedure to drain the air line.

1. Close the input connector on the turntable.
2. Open the output connector at the platform.
3. Raise the jib and main booms slightly above horizontal.
4. Open the input connector on the turntable.
5. Allow the fluid to drain from the line.
6. Lower the boom and close both connections.

Driving Lights

The optional driving lights are for use in dimly lit areas and are not intended for driving on public roadways. The machine may have two lights at the front of the turntable or four lights, two at the front and two at the rear of the turntable.

The lights are operational when the machine is set up for operation from the upper controls and the light switch is turned on.

If the engine is running, the idle speed increases when the driving lights are turned on.

Note
Working with the driving or platform work lights on, while the engine is off, can discharge the batteries enough that the engine will not start or the emergency power system will not operate. If the engine cannot be left running while the lights are on, start and run the engine for at least 15 minutes each hour.

Platform Work Lights

The optional platform work lights are located on the top rail of the platform next to the upper controls (refer to Figure 8.10). The direction a light points can be adjusted by using two ½″ wrenches to loosen the clamp below the light.

https://truckmanualshub.com/

Figure 8.10 – Upper Controls

The lights are operational when the upper controls emergency stop button is pulled up and the start switch is turned on.

The engine speed increases to high idle when the platform work lights are turned on.

Note
Working with the platform work lights on, while the engine is off, can discharge the batteries enough that the engine will not start and the emergency power system will not operate. If the engine cannot be left running while the lights are on, start and run the engine for at least 15 minutes each hour.

Platform Glazier Package

The glazier package allows the platform operator to position glass at the work place. Refer to the Glazier Package manual (Snorkel Part Number 0421269) for information on proper use of the glazier package.

The package includes two lined trays with keeper pins, platform rail padding, and tie-down straps with protectors (refer to Figure 8.11).

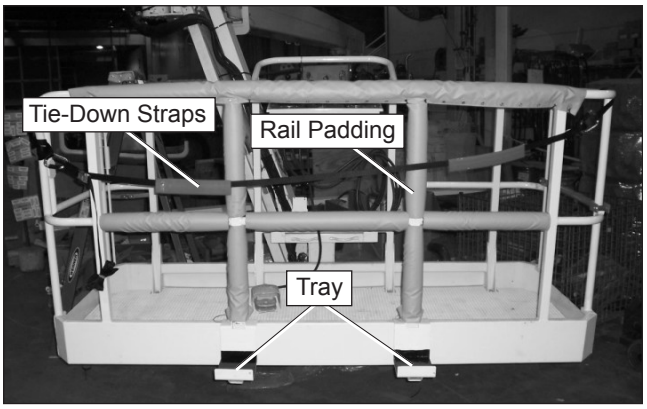

Figure 8.11 – Glazier Package

Platform Capacity

The platform rated work load is the total weight of the personnel and equipment that may be lifted in the platform. The work load is stated on the platform rating placard mounted on the toeboard at the rear of the platform.

The maximum total load carried by the glazier trays must not exceed 250 lb (113 kg). The weight of the load in the trays reduces the platform capacity by the amount of the load.

Bump Guard System

The optional bump guard system is a spring mounted padded railing below the platform. There are two infrared lights mounted along the bottom of the platform next to two infrared sensitive switches. The lights shine on reflectors on the bump guard system and are reflected back to the switches.

If the bump guard comes into contact with a stationary object, the bump guard moves and one or both of the light beams is broken. A dark switch removes control from the platform control box, immediately stopping all platform movement.

To override the bump guard infrared switch, in order to move away from the stationary object, do the following:

1. At the upper controls, hold the proximity override switch up.
2. Use the controls on the upper control box to move the platform away from the stationary object.
3. Return the proximity override switch to normal operation.

https://truckmanualshub.com/

https://truckmanualshub.com/

Chapter 9 – Stowing and Transporting

To prevent unauthorized use and damage, properly stow the aerial platform at the end of each work day. It must also be properly stowed while transporting.

Stowing

The properly stowed position is shown in Figure 9.1.

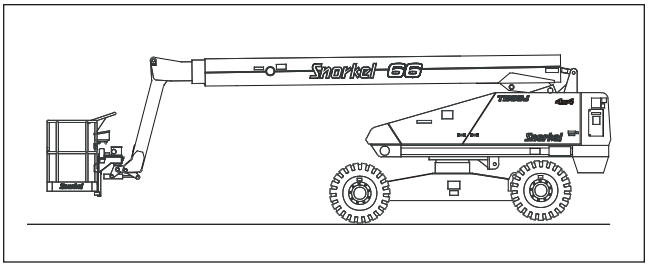

Figure 9.1 – Stowed Position

Use the following procedure to properly stow the aerial platform.

1. Rotate the platform so it is perpendicular to the end of the boom.
2. Fully retract the tip boom and then fully lower the main boom.
3. Lower the jib boom until the foot on the jib is near the ground to allow for exiting the platform.
4. Center the booms between the rear wheels.
5. If the engine has just been under load and is hot, set the throttle switch to low and let the engine idle for five minutes.
6. Turn the start switch off and place the platform control box cover over the upper controls if the machine is equipped with that option.
7. Push the lower controls emergency stop button inward. Turn the start switch off and remove the key.
8. Turn the battery disconnect switch off.
9. On dual fuel machines, close the shut-off valve on the LPG tank.
10. Close and latch the cowling doors.

Transporting

The aerial platform may be moved on a transport vehicle. Depending on the particular situation, the aerial platform may be driven, winched, or hoisted onto a vehicle such as a truck or trailer. Driving is the preferred method.

⚠Danger

The aerial platform can tip over if it becomes unstable. Death or serious injury will result from a tip-over accident. Do not drive on slopes that exceed the grade capability of the machine, or where conditions of the ramp could cause driving to be hazardous.

Drive the aerial platform onto the transport vehicle if the ramp incline is within the 25 percent grade capability of the two wheel drive machines, or 30 percent grade capabilities of the four wheel drive machines.

A 25 percent grade is a 30″ (0.76 m) vertical rise in 10′ (3.05 m) horizontal length.

A 30 percent grade is a 36″ (0.91 m) vertical rise in 10′ (3.05 m) horizontal length.

Use a winch to load and unload the aerial platform on ramps that exceed the grade capability of the machine. A winch may also be used when conditions of the ramp could cause driving to be hazardous.

The equipment used to load, unload, and transport the aerial platform must have adequate capacity. Refer to Chapter 2 to determine the approximate weight of the aerial platform.

The user assumes all responsibility for:

- Choosing the proper method of transportation.
- Choosing the proper selection and use of transportation and tie-down devices.
- Making sure the equipment used is capable of supporting the weight of the aerial platform.
- Making sure all manufacturer's instructions and warnings, regulations and safety rules of their employer, the DOT, and/or any other state or federal law are followed.

Driving

Use the following procedure to drive the aerial platform onto the transport vehicle.

1. Locate the transport vehicle so it is in a straight line with the loading ramp.
2. Chock the vehicle wheels so it cannot roll away from the ramp while the machine is loaded.
3. Remove any unnecessary tools, materials, or other loose objects from the platform.
4. Drive the machine to the foot of the loading ramp with the front wheels nearest the ramp. Make sure the machine is centered with the ramps and that the steering wheels are straight.

https://truckmanualshub.com/

5. Rotate the platform so it is perpendicular to the boom.

6. Retract the tip boom. Raise the main boom and jib so they are horizontal.

7. Rotate the turntable slightly to the side so you can see the front wheels.

8. Verify that the machine wheels, loading ramps, and transport vehicle are aligned.

⚠Danger

The aerial platform can tip over if it becomes unstable. Death or serious injury will result from a tip-over accident. Set the drive range to low before driving up or down a grade.

9. Place the drive range switch in the low position.

10. Drive the aerial platform onto the transport vehicle in a straight line through the grade transitions with minimal turning.

11. Rotate the turntable to align the main boom between the rear wheels.

12. When driving down the ramp, always back the machine with the platform on the downhill side only.

Winching

Use the following procedure to winch the aerial platform onto the transport vehicle.

1. Locate the transport vehicle so the aerial platform will not roll forward after it is loaded.

2. Remove any unnecessary tools, materials, or other loose objects from the platform.

3. Drive the machine to the foot of the loading ramp with the front wheels nearest the ramp. Make sure the machine is centered with the ramps and that the steering wheels are straight.

4. Fully retract the tip boom. Lower the main boom and jib as much as possible making sure there is adequate ground clearance between the platform and the ramp.

5. Attach the winch to the tie-down lugs (refer to Figure 9.2) on the front of the chassis.

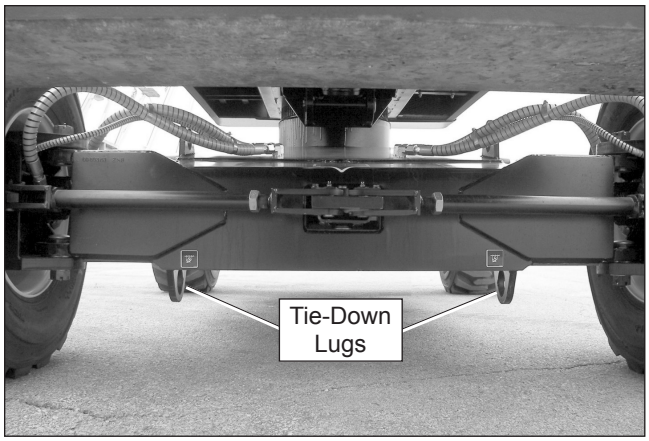

Figure 9.2 – Front Tie-Down Lugs

6. At each drive wheel, remove the two bolts from the disconnect plate (refer to Figure 9.3). Turn the plate over so the nipple points inward. Reinstall the two bolts.

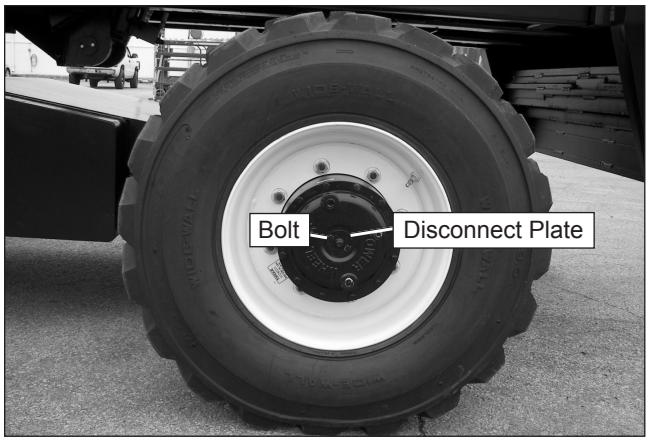

Figure 9.3 – Drive Wheel

7. Use the winch to position the aerial platform on the transport vehicle.

⚠Warning

The aerial platform is free to move when the drive hubs are disabled. Death or serious injury can result. Re-enable the drive hubs before operating the aerial platform.

8. At each drive wheel, remove the two bolts and return the plate to its original position as shown in Figure 9.3.

9. Start the engine and operate the drive control in forward and reverse several times to engage the drive hubs.

Hoisting

Use a four point sling arrangement attached to the lifting lugs when hoisting the aerial platform. Machine damage can occur if the sling is attached to the booms, turntable, or platform.

https://truckmanualshub.com/

⚠Warning

The potential for an accident increases when the aerial platform is lifted using improper equipment and/or lifting techniques. Death or serious injury could result from such accidents. Use proper equipment and lifting techniques when lifting the aerial platform.

Know the weight of the aerial platform and the capacity of the lifting devices before hoisting.

- Lifting devices include the hoist or crane, chains, straps, cables, hooks, sheaves, shackles, slings, and other hardware used to support the machine.
- The empty vehicle weight is stamped on the serial number placard and is listed in Chapter 2.

The user assumes all responsibility for:

- Making sure the equipment used is capable of supporting the weight of the aerial platform.
- Making sure all manufacturer's instructions and warnings, regulations and safety rules of their employer and/or any state or federal law are followed.

Use the following procedure to hoist the aerial platform onto the transport vehicle.

1. Properly stow the aerial platform.

Note
The lifting lugs at the rear of the chassis are farther apart than those at the front. Rotating the turntable 180° will place the counterweight at the rear of the chassis. This will reduce the number of spreader bars needed by one and sometimes two.

2. Inspect the lifting lugs (refer to Figure 9.4) to make sure they are free of cracks, rust and are in good condition. Have any damage repaired by a qualified service technician before attempting to hoist the machine.
3. Remove all personnel, tools, materials, or other loose objects from the platform.
4. Connect the chains or straps to the lifting lugs using bolted shackles. Hooks that fit properly in the lugs and that have latching mechanisms to prevent them from falling out under a slack line condition may also be used.

   Do not run the sling cable through the lifting lugs.

   - Cable damage and/or failure can result from the cable contacting the sharp corners of the lug.
   - There is no effective way of putting a corner protector in the hole of the lug.
5. Use spreader bars of sufficient length to keep the chains, straps, or cables from contacting the turntable or booms.
   - When using cables, use rigid corner protectors at any point where the cable contacts on sharp corners to prevent damaging the cable.
   - Careful rigging of the spreaders is required to prevent machine damage.
6. Adjust the length of each chain or strap so the aerial platform remains level when raised off the ground.
7. Use the hoist or crane to carefully raise and position the aerial platform onto the transport vehicle.

Securing for Transport
Use the following procedure to secure the aerial platform on the transport vehicle.

1. Chock the wheels.
2. Remove all personnel, tools, materials, or other loose objects from the platform.

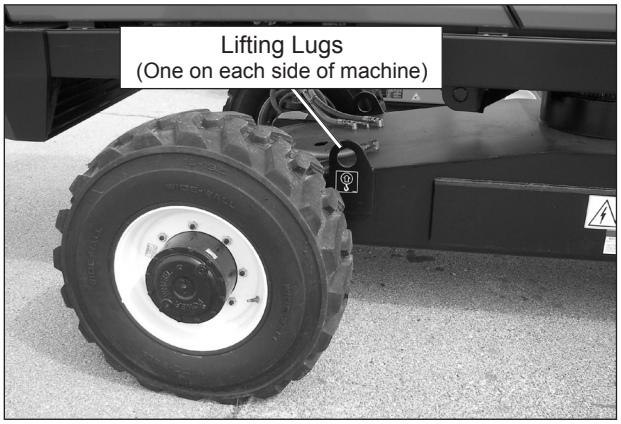

Front of Machine

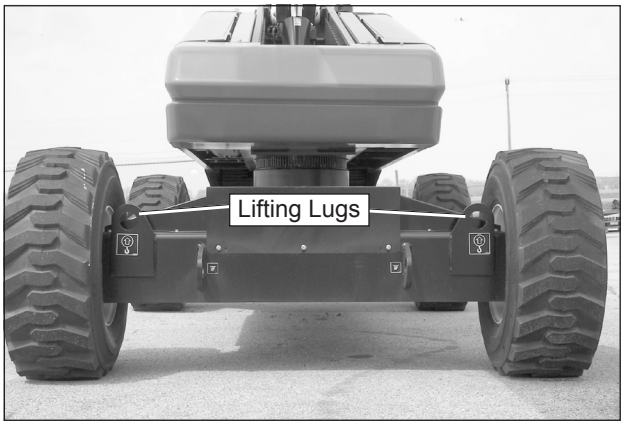

Rear of Machine

Figure 9.4 – Lifting Lugs

https://truckmanualshub.com/

3. Raise the main boom about 1′ (0.3 m).

4. Place a wood block under the rotator pylon. Lower the boom so the pylon rests on the wood block.

5. From the upper controls, turn the start switch to the off position. If equipped, place the platform control box cover over the upper controls.

6. From the lower controls, push the emergency stop button inward. Turn the start switch to the off position and remove the key.

7. Turn the battery disconnect switch off.

8. On duel fuel machines, close the shut-off valve on the LPG tank (refer to Figure 9.5).

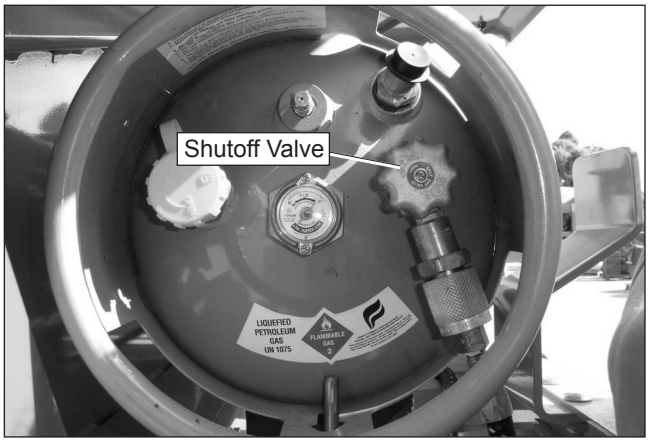

Figure 9.5 – LPG Tank

9. Close and latch the cowling doors.

10. Use wire-ties to fasten the platform gate to the guardrails to prevent the gate from bouncing. Also, use wire-ties to fasten the platform foot switch to the platform floor.

⚠Caution

Ratchets, winches, and come-alongs may produce enough force to damage machine components. Do not over tighten the straps or chains when securing the aerial platform to the transport vehicle.

11. Determine if the platform is made of steel or aluminum. Steel platforms have toeboards with rolled edges an aluminum platforms have toeboards with straight edges.

⚠Caution

Aluminum toeboards are not strong enough to use when securing the platform to the transport vehicle. Damage to the platform may occur if the nylon strap is placed over the toeboards. Thread the strap through the platform mounting bracket or over the mid rail when securing an aluminum platform.

12. Use a nylon strap to securely fasten the platform against the wood block. On steel platforms, thread the strap over the toeboard as shown in Figure 9.7.

13. On aluminum platforms, thread the strap over the platform mounting bracket or the mid rail as shown in Figure 9.6.

14. Use chains or straps to securely fasten the aerial platform to the transport vehicle using the tie-down lugs as attachment points. Proper tie-down and hauling are the responsibility of the carrier.

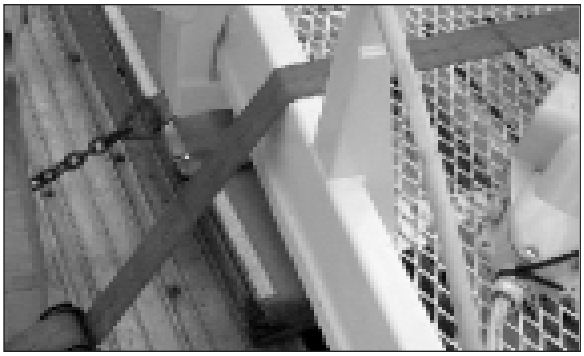

Steel

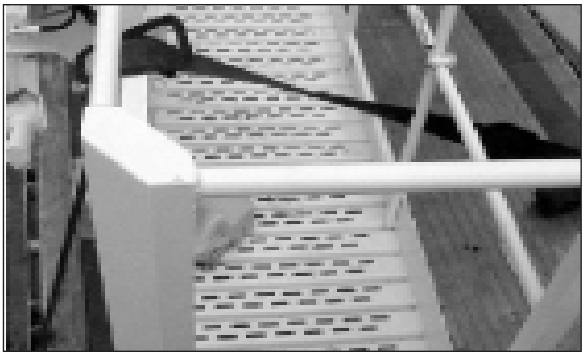

Aluminum

Figure 9.6 – Platform

https://truckmanualshub.com/

Chapter 10 – Emergency Operation

If the main hydraulic system fails, the aerial platform may be lowered and stowed using the emergency power system. The main boom may be lowered using the emergency lowering knob. The machine may be towed at slow speeds using the optional tow kit if the drive system fails.

Refer to Emergency Power System, Emergency Lowering, or Towing for the appropriate procedure.

Emergency Power System

The emergency power system can be used to operate the machine from the lower or upper controls.

⚠Caution

The emergency power system is for emergency lowering and stowing only. The length of time the pump can be operated depends on the capacity of the battery. Do not use this system for normal operation.

Only use the emergency power system if the main power system fails.

Lower Controls

Use the following procedure to operate the machine using the emergency power system from the lower controls.

1. Place the battery disconnect switch in the on position (refer to Figure 10.1).

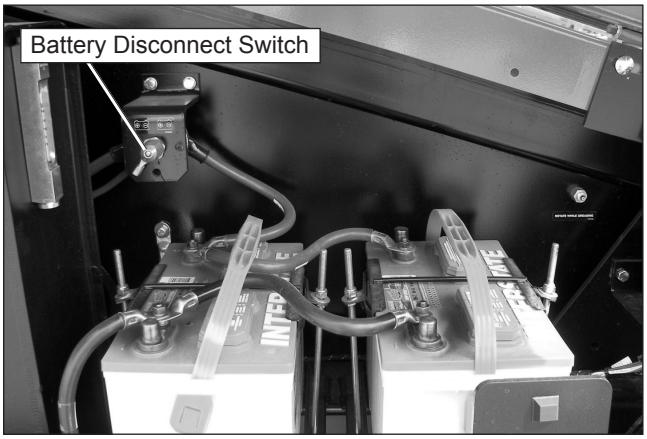

Figure 10.1 – Battery Disconnect Switch

2. Place the key in the start switch (refer to Figure 10.2) and turn the switch to the on position.

3. Pull the emergency stop button outward.

4. Place the control selector switch in the lower controls position.

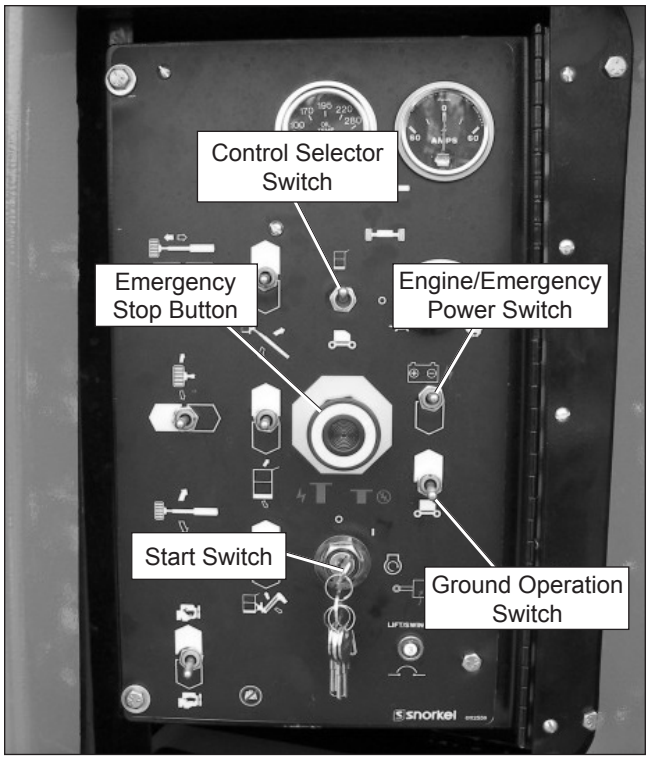

Figure 10.2 – Lower Controls

5. Hold the ground operation switch upward to the on position while holding the engine/emergency power switch downward to the emergency power position.

6. Hold the appropriate function toggle switch in the desired direction.

Upper Controls

For the upper controls to be operational:

- The battery disconnect switch must be in the on position.
- The emergency stop button at the lower controls must be in the on position.
- The start switch at the lower controls must be in the on position.
- The control selector switch at the lower controls must be in the upper control position.

Use the following procedure to operate the machine using the emergency power system from the upper controls.

1. Pull the emergency stop button outward (refer to Figure 10.3).

2. Turn the start switch on.

https://truckmanualshub.com/

Top

Front

Figure 10.3 – Upper Controls

3. Step down on the platform foot switch (refer to Figure 10.4).

Figure 10.4 – Platform

4. Hold the engine/emergency power switch in the emergency power position.

5. Hold the appropriate function toggle switch in the desired direction.

Emergency Lowering

The main boom can be lowered in an emergency using the emergency lowering knob at the base of the lift cylinder. The emergency lowering knob allows the main boom to be lowered only. Only use this method if the engine will not start and the emergency power system will not work.

⚠Danger

Pinch points exist between boom components and between the booms and turntable. Death or serious injury will result if the booms or platform lowers onto personnel. Make sure all personnel stand clear while lowering the booms.

Use the following procedure to manually lower the main boom.

1. Slowly turn the emergency lowering knob to open the bleed down valve on the main boom lift cylinder (refer to Figure 10.5). Control the rate of descent by turning the knob.

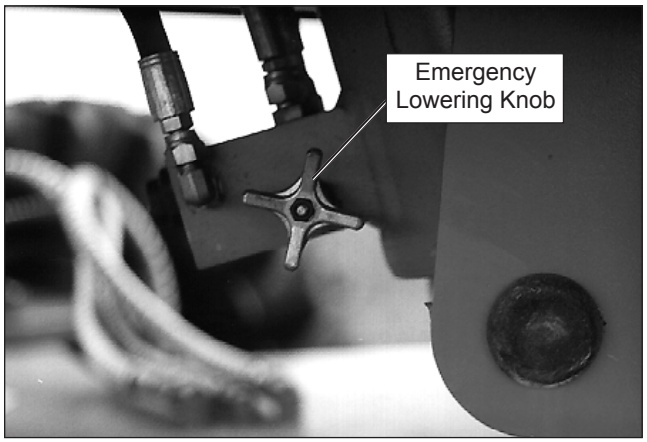

Figure 10.5 – Emergency Lowering Knob

⚠Warning

The potential for an accident increases when safety devices do not function properly. Death or serious injury can result from such accidents. Fully close the emergency lowering knob before operating the aerial platform.

2. Turn the knob to close the cylinder bleed down valve.

https://truckmanualshub.com/

Towing

The aerial platform may be towed at slow speeds using the optional tow kit. The tow vehicle must have sufficient capacity to safely tow and stop itself and the aerial platform on the steepest grade and type of surface that may be encountered. Refer to Chapter 2 for the approximate weight of the aerial platform.

⚠Warning

The aerial platform is free to move when the drive hubs are disabled. Death or serious injury can result. Securely fasten the tow vehicle to the aerial platform before disabling the drive hubs.

Use the following procedure to manually disengage the drive hubs and tow the machine.

1. With the machine in the stowed position, remove the tow bar from the storage cradles and lay the tow bar near the front of the chassis.

⚠Danger

Pinch points may exist between machine components. Death or serious injury will result from becoming trapped between components. Do not attach the tow bar to the tow vehicle until the counterweight is to the side of the chassis.

2. Rotate the turntable, until the counterweight is to the side of the chassis, to allow room to attach the tow bar.

3. Attach the tow bar to the front steering arm with the tow pin and snap pin.

4. Attach the tow bar to the tow vehicle.

5. Rotate the turntable so the counterweight is back at the front of the chassis. Raise the platform about 3′ (1 m) above the ground.

6. Shut the engine off and turn the battery disconnect switch off.

7. Pull the steering float valve knob outward. The valve is located on the right side of the turntable.

8. At each drive wheel, remove the two bolts from the disconnect plate (refer to Figure 10.6). Turn the plate over so the nipple points inward. Reinstall the two bolts.

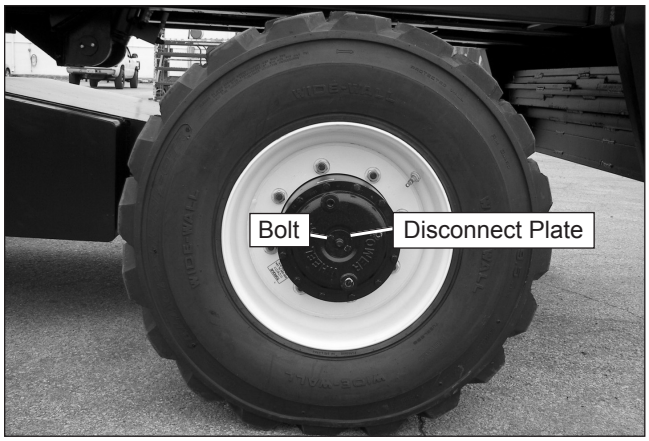

Figure 10.6 – Drive Wheel

9. Do not exceed 10 mph (16 km/h) when towing. Use caution when traveling around a curve or when turning a corner. If the tow bar contacts the chassis the steering mechanism might be damaged, or the tow vehicle and the aerial platform could jackknife.

⚠Warning

The aerial platform is free to move when the drive hubs are disabled. Death or serious injury can result. Re-enable the drive hubs before operating the aerial platform.

10. After towing, push the steering float valve knob inward.

11. At each drive wheel, remove the two bolts and return the plate to its original position as shown in Figure 10.8.

12. Unfasten the tow vehicle from the machine and replace the tow bar on the storage cradles.

13. Verify that the drive system operates properly.

https://truckmanualshub.com/

https://truckmanualshub.com/

Chapter 11 – Troubleshooting

The troubleshooting chart may be used to locate and eliminate situations where machine operation may be interrupted. If the problem cannot be corrected with the action listed, stow the machine and remove it from service. Repairs must be made by qualified maintenance personnel.

Troubleshooting Chart

Symptom	Possible Cause	Corrective Action
Engine will not start from lower or upper controls.	Out of fuel. The engine will crank, but will not start.	Add correct type of fuel. Try starting the engine for 20 seconds and then let the starter motor cool for 60 seconds. Repeat as necessary. Kubota engines – If engine will not start after 4 cycles, refer to Fuel Line Air Bleeding at the end of this chart.
	Engine is cold.	Cummins/Ford/GM engine – plug the block or radiator in-line heater into a 125 Volt AC, 600 watt source eight hours before starting the engine. Deutz engine – Hold the manifold heater switch on for about a minute before starting the engine. Hold the switch on until the engine starts.
	High engine temperature.	Let engine cool. Do not restart the engine until the cause of overheating has been corrected.
	Low oil pressure.	Do not try to start the engine until the cause of low oil pressure has been corrected. The engine can be restarted with low oil pressure, but it will only run a few seconds before it shuts off again.
	Clogged air filter.	Visually check air filter gauge.
	Engine oil too thick for ambient temperature.	Refer to Chapter 2 for correct oil weight.
	Dual fuel machines. The fuel switch on the lower control panel is set incorrectly. The engine cranks, but will not start.	• Place the fuel switch on the lower control panel in the proper position for the fuel being used. • Make certain there is fuel in the fuel tank. • If using LPG make certain that the fuel shut-off valve is open. • Try starting the engine for 20 seconds and then let the starter motor cool for 60 seconds. Repeat as necessary

https://truckmanualshub.com/

Symptom	Possible Cause	Corrective Action
Engine will not start from lower controls.	Switches are set wrong. The engine will not crank.	Turn the battery disconnect switch on and then at the lower controls: • Turn the start switch off. • Pull the emergency stop button outward. • Place the control selector switch in the lower control position. • Place the start switch in the on position for 5 seconds and then turn the switch to start.
	The start switch was left in the on position for 30 seconds or longer before turning it to start.	Turn the start switch to off, then to start within 30 seconds.
	The main system circuit breaker on the wiring box has tripped. The engine will not crank.	Push the main system circuit breaker button back in. If the button pops back out, refer the problem to a qualified service technician.
Engine will not start from upper controls.	Switches are set wrong. The engine will not crank.	Turn the battery disconnect switch on and then at the lower controls: • Turn the start switch off. • Pull the emergency stop button outward. • Place the control selector switch in the upper control position. • Place the start switch in the on position. From the upper controls: • Turn the start switch off. • Pull the emergency stop button outward. • Place the start switch in the on position for 5 seconds and then turn the switch to start.
	Platform foot switch is activated.	Do not step on foot switch while starting the engine.
	The start switch was left in the on position for 30 seconds or longer before turning it to start.	Turn the start switch back to off, then to start within 30 seconds.
	The main system circuit breaker on the upper control panel or wiring box has tripped. The engine will not crank.	Push the main system circuit breaker button back in. If the button pops back out, refer the problem to a qualified service technician.

https://truckmanualshub.com/

Symptom	Possible Cause	Corrective Action
Engine starts from the upper controls but no boom functions work – machines with AC generator option only.	The AC generator switch is in the generator position.	Place the switch in the machine position to operate machine functions.
Engine dies when the control selector switch at the lower controls is placed in the upper control position.	Upper controls are not set-up properly.	At the upper controls, pull the emergency stop button upward and turn the anti-restart master switch on.
Constant tone alarm sounds while the engine is running.	High engine temperature.	Lower the platform and turn the engine off and let it cool. Do not restart the engine until the cause of overheating has been corrected.
	Low oil pressure.	Lower the platform and turn the engine off. Do not restart the engine until the cause of low oil pressure has been corrected.
	No alternator current/broken fan belt.	Turn the engine off. Do not restart the engine until the cause of no alternator current has been corrected or the fan belt is replaced.
Constant tone alarm sounds and engine shuts off.	High engine temperature.	Let the engine cool. Do not restart the engine until the cause of overheating has been corrected.
	Low oil pressure.	Do not restart the engine until the cause of low oil pressure has been corrected. The engine can be restarted with low oil pressure, but it will only run a few seconds before it shuts off again.
All functions stop working.	Low fluid level in reservoir.	Check fluid level. Add correct type of fluid if necessary.
	Engine or pump failure.	Manually stow the machine using the emergency power system or the emergency lowering knob.
	Circuit breaker is tripped.	Push circuit breaker button in to reset.
	Electrical system malfunction.	Manually lower the boom using the emergency lowering knob.
Lower controls do not work.	Battery disconnect switch turned off.	Place switch in the on position.
	Emergency stop switch at lower controls is pushed in to the off position.	Pull the emergency stop button outward.
	Control selector switch is in the upper control position.	Place the switch in the lower control position.
	Ground operation switch not held in the on position.	Hold the ground operation switch in the on position while operating the control toggle switches.
Upper controls do not work.	Battery disconnect switch turned off.	Place switch in the on position.
	Emergency stop button at lower and upper controls is in the off position.	Pull the emergency stop buttons outward.
	Control selector switch at lower controls is in the lower control position.	Place switch in the upper control position.
	Platform foot switch not engaged.	Step down on platform foot switch while operating controls.

https://truckmanualshub.com/

Symptom	Possible Cause	Corrective Action
Boom and drive functions seem sluggish.	Hydraulic oil is cold and thick.	Use cold weather hydraulic oil as recommended for weather conditions. Warm oil before operating the machine.
Boom jerks while it is extended.	Wire ropes are loose.	Refer the problem to a qualified service technician.
Tip boom extend/retract, jib, and platform rotate functions do not work from the upper controls.	Boom speed knob set too slow.	Turn knob toward fast.
Booms drift down.	The emergency lowering valve is open.	Turn the emergency lowering knob to close the valve.
	Hydraulic system malfunction.	Stow the machine and do not operate until repairs are made.
Drive functions do not work.	Machine on too steep a grade.	Lower the booms and drive to a level surface.
	Drive hubs are disengaged.	Turn drive wheel disconnect plates around so nipples point outward.
	Low hydraulic system pressure.	Stow the machine and do not operate until repairs are made.
Can not reach maximum drive speed.	Booms are not retracted and lowered.	Fully retract and lower the booms.
	Drive range switch is in low.	Place the switch in the high position.
Wheels won't turn when winching or pushing.	Drive hubs are engaged.	Turn drive wheel disconnect plates around so nipples point inward.
Steer wheels do not turn right or left – machine with tow option only.	Tow kit steering float valve is open.	Close the steering float valve.
Tilt alarm does not work.	Booms are stowed.	Normal operation. The tilt alarm is not operational when the booms are stowed.
Circuit breaker will not reset.	Electrical circuit has not had time to cool.	Wait a minute or two for circuit to cool, then push circuit breaker button in to reset.
	Electrical system malfunction.	Do not operate machine until repairs are made.
Electrical outlet does not work.	Power supply not plugged in.	Plug a source of power into the power-input connector on the wiring box.
	GFCI is tripped	Push reset button on outlet.
	AC generator switch not in the generator position.	With engine running, place the AC generator switch in the generator position.
Improper AC generator output voltage.	Hydraulic oil is cold and thick.	Use cold weather hydraulic oil as recommended for weather conditions. Warm oil before operating.
Hydraulic fluid temperature 200°F (93°C) or more.	Prolonged machine operation or driving.	Stop operation until fluid cools.
	High pressure fluid return to reservoir caused by kink or twisted hose.	Remove the kink or twist from the hose. Let fluid cool before operating.
	Hydraulic system component failure.	Stow the machine and do not operate until repairs are made.
Severe hydraulic leak.	Failure of hose, tube, fitting, seal, etc.	Do not operate machine until repairs are made.

https://truckmanualshub.com/

Fuel Line Air Bleeding – Kubota V2403-M-T

If the engine will not start because of air in the fuel line, use one of the following methods to remove the air to restart the engine.

Open Bleeder Valve and Crank Engine

Slightly open the bleeder valve (refer to Figure 11.1) and crank the engine for a few seconds to let the air out. Close the valve and start the engine.

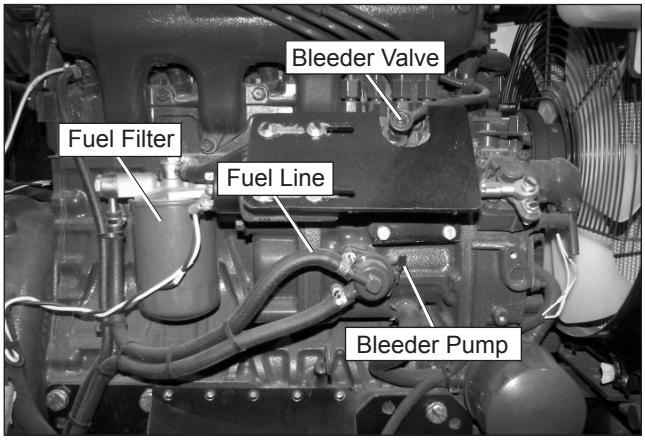

Figure 11.1 – Kubota V2403-M-T

Fill the Fuel Filter

Remove the fuel filter. Fill the filter with fuel of the correct grade and replace it. Crank the engine for a few seconds to start the engine.

Operate Bleeder Pump

Slightly open the bleeder valve and operate the bleeder pump up and down until the air is out of the line. This make take several minutes of operating the pump before the air is removed from the line. Close the valve and start the engine.

https://truckmanualshub.com/

https://truckmanualshub.com/

Appendix A – Glossary

aerial platform – a mobile device that has an adjustable position platform, supported from ground level by a structure.

ambient temperature – the air temperature of the immediate environment.

ammeter – an instrument for measuring the strength of an electric current in amperes.

authorized personnel – personnel approved as assigned to perform specific duties at a specific location.

base – the relevant contact points of the aerial platform that form the stability support (e.g. wheels, casters, outriggers, stabilizers).

boom – a movable cantilever beam which supports the platform.

center of gravity – the point in the aerial platform around which its weight is evenly balanced.

chassis – the integral part of the aerial platform that provides mobility and support for the booms.

fall restraint – a system that is used while working on a boom lift within the boundaries of platform guardrails to provide restraint from being projected upward from the platform. This system includes a harness or belt, lanyard and a lanyard anchor. Federal OSHA, ANSI and Snorkel require the use of additional fall protection beyond the platform guardrails on boom supported aerial platforms.

floor or ground pressure – the maximum pressure, expressed in pounds per square inch, a single wheel concentrates on the floor or ground.

gradeability – the maximum slope that the aerial platform is capable of travel.

guardrail system – a vertical barrier around the platform to prevent personnel from falling.

hazardous location – any location that contains, or has the potential to contain, an explosive or flammable atmosphere as defined by ANSI/NFPA 505.

intermediate boom – a telescopic boom section that extends and retracts from within the main boom. The intermediate boom is between the base, or lower most section of the main boom, and the tip boom.

jib – an articulating boom attached to the tip boom which increases the overall boom reach.

l**evel sensor** – a device that detects a preset degree of variation from perfect level. The level sensor is used to sound an alarm if operating on a slope greater than the preset value.

l**ower controls** – the controls located at ground level for operating some or all of the functions of the aerial platform.

main boom – a boom assembly located between the turntable and the platform.

manufacturer – a person or entity who makes, builds or produces an aerial platform.

maximum travel height – the maximum platform height or the most adverse configuration(s) with respect to stability in which travel is permitted by the manufacturer.

maximum wheel load – the load or weight that can be transmitted through a single wheel to the floor or ground.

Minimum Safe Approach Distance – the minimum safe distance that electrical conductors may be approached when using the aerial platform. Also called M.S.A.D.

operation – the performance of any aerial platform functions within the scope of its specifications and in accordance with the manufacturer's instructions, the users work rules, and all applicable governmental regulations.

operator – a qualified person who controls the movement of an aerial platform.

personal fall arrest system – a fall protection system that is used while working on an unprotected edge (such as a roof top with no guardrail). This system includes a harness, lanyard or other connecting device, a fall arrestor, an energy absorber or decelerator, an anchorage connector and a secure anchorage such as a building beam, girders or columns. An aerial platform is not a fall arrest anchorage.

platform – the portion of an aerial platform intended to be occupied by personnel with their tools and materials.

platform height – the vertical distance measured from the floor of the platform to the surface upon which the chassis is being supported.

prestart inspection – a required safety inspection routine that is performed daily before operating the aerial platform.

qualified person – a person, who by reason of knowledge, experience or training is familiar with the operation to be performed and the hazards involved.

rated work load – the designed carrying capacity of the aerial platform as specified by the manufacturer.

stow – to place a component, such as the platform, in its rest position.

tip boom – a telescopic boom section that extends and retracts from within the main boom. The tip boom is nearest the platform.

turning radius – the radius of the circle created by the wheel during a 360° turn with the steering wheels turned to maximum. Inside turning radius is the wheel closest to the center and outside turning radius is the wheel farthest from the center.

turntable – the structure above the rotation bearing which supports the main boom. The turntable rotates about the centerline of rotation.

unrestricted rated work load – the maximum designed carrying capacity of the aerial platform allowed by the manufacturer in all operating configurations.

upper controls – the controls located on or beside the platform used for operating some or all of the functions of the aerial platform.

wheelbase – the distance from the center of the rear wheel to the center of the front wheel.

working envelope – the area defined by the horizontal and vertical limits of boom travel that the platform may be positioned in.

working height – platform height plus six feet.

https://truckmanualshub.com/

https://truckmanualshub.com/

Product Warranty

1. Snorkel warrants each new machine manufactured and sold by it to be free from defects in material and workmanship for a period of one (1) year from date of delivery to a Customer. The warranty will apply subject to the machine being operated in accordance with the rules, precautions, instructions and maintenance requirements outlined in the Snorkel Operator's and Repair Parts Manuals.

2. Snorkel further warrants the structural components, specifically the mainframe chassis, turntable, booms and/or scissor arms of each new machine manufactured by it to be free from defects in material and workmanship for an additional period of four (4) years. Any such part or parts which, upon examination by the Snorkel Warranty Department, are found to be defective will be replaced or repaired by Snorkel through its local Authorised Dealer. The structural warranty specifically excludes adverse affects on the machine structure arising from damage, abuse or misuse of the equipment.

3. Machines may be held in an authorised Distributor stock for a maximum of six (6) months from the date of shipment from Snorkel, before the warranty period is automatically initiated.

4. It is the responsibility of the Distributor to complete and return a Predelivery/Warranty registration, before the act of rental/loan/demonstration of the machine or delivery to an end user.

5. The Customer and Dealer shall not be entitled to the benefits of this warranty and Snorkel shall have no obligations here under unless the “Predelivery and Inspection Record” has been properly completed and returned to the Snorkel Warranty department within fifteen (15) days after delivery of the Snorkel product to the Customer or Dealer’s demonstration/rental fleet. Snorkel must be notified, in writing, within ten (10) days, of any machine sold to a Customer from a Dealer’s rental fleet during the warranty period.

6. Any part or parts which upon examination by the Snorkel Product Support Department are found to be defective within the specified warranty period, will be replaced or repaired at the sole discretion of Snorkel, through Snorkel directly or an authorised Distributor, at no charge. Any parts replaced under warranty must be original Snorkel parts obtained through Snorkel directly or an authorised Distributor, unless expressly agreed otherwise in writing and in advance by Snorkel’s Warranty Department.

7. All parts being claimed under warranty must be held available for return and inspection upon request for a period of 90 days from date of claim submission, it is necessary that all parts are individually tagged or marked with their part number and the warranty claim number. After 90 days all parts replaced under warranty which have not been returned to Snorkel should be destroyed. Failure to produce parts requested by the Warranty Administrator for inspection within a period of 14 days will result in the claim being automatically rejected in full. Materials returned for warranty inspection must have the following procedure:

   - Carefully packaged to prevent additional damage during shipping
   - Drained of all contents and all open ports capped or plugged
   - Shipped in a container tagged or marked with the RMA number
   - Shipped PREPAID. Any item(s) returned for warranty by any other means maybe refused and returned, unless prior approval is agreed with Snorkel.

© Snorkel

© Snorkel International, Inc. – all rights reserved

Printed in the U.S.A.

https://truckmanualshub.com/

Product Warranty

8. At the direction of the Snorkel Warranty Department, any component part(s) of Snorkel products to be replaced or repaired under this warranty program must be returned freight prepaid for inspection. An RMA (Returns Material Authorisation) must be requested from Snorkel Warranty Department, a copy to be placed with the returning component part(s).

9. All warranty replacement parts will be shipped freight prepaid (standard charge) from the Snorkel Parts/Service Department or from the Vendor to Dealer or Customer.

10. All warranty claims are subject to approval by Snorkel Service Department. Snorkel reserves the right to limit or adjust claims with regard to defective parts, labor or travel time based on usual and customary guidelines.

REPLACEMENT PARTS WARRANTY

- Any part replaced under this limited warranty is not subject to further warranty cover beyond the normal warranty period of the machine upon which the part was installed.
- Any replacement parts sold (not delivered under a warranty claim) will be subject to a warranty period of (6) six months from the date of invoice.
- Parts held by a Distributor are covered under warranty for a period of (12) twelve months from the date of invoice, provided that those parts have been subject to appropriate storage to prevent damage and deterioration.

CLAIM PROCEDURE

The Snorkel Warranty Department must be notified within (48) forty-eight hours of any possible warranty situation during the applicable warranty period. Personnel performing major warranty repair or parts replacement must obtain specific approval by the Snorkel Warranty Department prior to performing the warranty repair or replacement.

When a Distributor/Customer perceive a warranty issue to exist the following steps must be adhered to:

- All warranty claims must be submitted within 30 days of the date of the machine repair
- All correspondence in respect of the claim to be on an official Snorkel warranty claim form as supplied by Snorkel's Warranty Department
- Allocate a warranty claim number to the repair
- Place a purchase order for genuine Snorkel replacement parts
- Snorkel to dispatch parts via the requested method (in line with the required response time)
- Confirmation that a qualified technician is available to replace the part and that this person has been accepted by Snorkel to carry out such work under the warranty of the machine. Failure to do this may nullify the warranty.

FREIGHT DAMAGE

If a machine is received in a damaged condition, then the damage must be noted on the bill of lading and/or delivery documents and if possible photographs taken, prior to signing acceptance of the consignment. The freight company must be contacted by the Distributor and a damage claim registered immediately.

THIS WARRANTY EXCLUDES AND SNORKEL DOES NOT WARRANT:

1. Engines, motors, tires and batteries are manufactured by suppliers to Snorkel, who furnish their own warranty. Snorkel will, however, to the extent permitted; pass through any such warranty protection to the Distributor/Customer.

2. Any Snorkel product which has been modified or altered outside Snorkel factory without Snorkel written approval, if such modification or alteration, in the sole judgment of Snorkel Engineering and/or

© Snorkel 2014

https://truckmanualshub.com/

Product Warranty

Service Departments, adversely affects the stability, reliability or service life of the Snorkel product or any component thereof.

3. Any Snorkel product which has been subject to misuse and abuse, improper maintenance or accident. “Misuse” includes but is not limited to operation beyond the factory-rated load capacity and speeds. “Improper maintenance” includes but is not limited to failure to follow the recommendations contained in the Snorkel Operator's and Repair Parts Manuals.

4. Normal wear of any Snorkel component part(s). Normal wear of component parts may vary with the type, application or type of environment in which the machine may be used; such as, but not limited to sandblasting applications.

5. Routine maintenance, routine maintenance items and minor adjustments are not covered by this warranty, including but not limited to hydraulic fluid, filters and lubrication, paint and decals.

6. Any Snorkel product that has come into direct contact with any chemical or abrasive material.

7. Incidental or consequential expenses, losses, or damages related to any part or equipment failure, including but not limited to freight cost to transport the machine to a repair facility, downtime of the machine, lost time for workers, lost orders, lost rental revenue, lost profits, expenses or increased cost. This warranty is expressly in lieu of all other warranties, representations or liabilities of Snorkel, either expressed or implied, unless otherwise amended in writing by Snorkel.

8. Snorkel Warranty policy does not cover any duties, taxes, environmental fees including without limitation, disposal or handling of tires, batteries and petrochemical items.

9. Item specifically excluded are, fuel injectors, motor brushes, glow plugs, contactor tips and springs, oil filters, lamp bulbs, lamp lenses, O-rings, coolants, lubricants and cleaning material.

10. Failure of replacement parts due to fault misdiagnosis or incorrect fitting by the Distributor/Customer.

SNORKEL MAKES NO WARRANTIES WHICH EXTEND BEYOND THE DESCRIPTION OF THIS LIMITED WARRANTY

SNORKEL MAKES NO IMPLIED WARRANTY OF MERCHANTABILITY OR FITNESS FOR A PARTICULAR PURPOSE AND DISCLAIMS ALL LIABILITY FOR INCIDENTAL OR CONSEQUENTIAL DAMAGES, INCLUDING BUT NOT LIMITED TO INJURY TO PERSONS OR PROPERTY.

The Customer shall make all warranty claims through Snorkel directly or an Authorised Distributor. If unable to contact the Distributor, contact the Snorkel Service Department for further assistance.

© Snorkel

https://truckmanualshub.com/

Product Warranty

APPEAL

The buyer may appeal in writing against a rejected or adjusted claim to Snorkel Warranty Department within a period of 21 days of receiving the rejection or adjustment notice. The appeal should be grounded on express reasons and supported by relevant evidence. Appeals received outside of this time limit will not be considered.

WARRANTY SCHEDULE

Limited Warranty Periods

Item	Warranty Period
New machine materials and workmanship	1 year parts replacement
Structural components (Chassis, Turntable, Booms, Scissors)	5 years parts replacement or repair
Parts held in a Distributor's stock	12 months from date of invoice
Parts sold (non warranty)	6 months from date of invoice
Batteries	6 months from date of invoice
Other specifically excluded parts: Fuel injectors Motor brushes Glow plugs Contactor tips and springs Oils Filters Lamp bulbs Lamp lenses O-rings Coolants Lubricants Cleaning materials	Not covered by Warranty

© Snorkel 2014

https://truckmanualshub.com/

https://truckmanualshub.com/

Local Distributor / Lokaler Vertiebshändler / Distributeur local
El Distribuidor local / ll Distributore locale

EUROPE, MIDDLE EAST
AFRICA & ASIA
PHONE: +44 (0) 845 1550 058
FAX: +44 (0) 845 1557 756

NORTH & SOUTH AMERICA
PHONE: +1 785 989 3000
TOLL FREE: +1 800 255 0317
FAX: +1 785 989 3070

AUSTRALIA
PHONE: +61 1300 700 450
FAX: +61 2 9609 3057

NEW ZEALAND
PHONE: +64 6 3689 168
FAX: +64 6 3689 164

snorkel

www.snorkellifts.com